EMISSIONS TEST REPORT FOR THE F-551 HYDROGEN PLANT PROCESS HEATER AND THE B-8 BOILER

EXXONMOBIL BILLINGS REFINERY

F-551 Test Date: **10/19/2010**
B-8 Test Date: **10/29/2010**

MDEQ Air Quality Permit #1564-23
MDEQ Title V Permit #OP1564-05

Prepared for:

ExxonMobil

Billings Refinery
700 ExxonMobil Road
P.O. Box 1163
Billings, Montana 59103

Prepared by:

Bison Engineering, Inc.
1400 11th Avenue
Helena, MT 59601
(406) 442-5768
www.bison-eng.com

Report Date: December 16, 2010

EXECUTIVE SUMMARY

Bison Engineering, Inc. (Bison) was retained by ExxonMobil Billings Refinery to perform emissions testing on the F-551 process heater and B-8 boiler. The following tables present the results of the testing programs.

Table 1a: ExxonMobil F-551 Hydrogen Plant Process Heater Compliance Demonstration

ExxonMobil Billings Refinery F-551 Hydrogen Plant Process Heater Compliance Demonstration October 19, 2010		
Emissions		**Limitations**
NO_2, lbs/hr	18.53	23.35

Table 1b: ExxonMobil B-8 Boiler Compliance Demonstration

ExxonMobil Billings Refinery B-8 Boiler Compliance Demonstration October 29, 2010		
Emissions		**Limitations**
NO_2, lbs/hr	2.96	3.96
CO, lbs/hr	0.01	
NO_2, lbs/MMBtu	0.035	0.04
CO, lbs/MMBtu	0.0001	

CERTIFICATION OF REPORT INTEGRITY

Bison Engineering, Inc. (Bison) certifies that this report represents an accurate account of the air quality emissions testing performed at the ExxonMobil Billings Refinery in Billings, Montana, on October 19 and 29, 2010. Every effort was made to obtain reliable, repeatable, and representative data using source testing methods described in the September 2, 2010, pretest protocol.

Project Manager:	Steve Fryberger
Title:	Project Engineer
Signature:	Steve J. Fryberger
Date:	12-16-10

TABLE OF CONTENTS

EXECUTIVE SUMMARY ii

CERTIFICATION OF REPORT INTEGRITY iii

1.0 INTRODUCTION 1
- 1.1 Program Organization 1
- 1.2 Project Personnel 2
  - 1.2.1 Bison Engineering, Inc. 2
  - 1.2.2 ExxonMobil Billings Refinery 2
  - 1.2.3 Montana Department of Environmental Quality 2

2.0 EMISSION SOURCE INFORMATION 3
- 2.1 Facility Description 3
- 2.2 Emission Source Description 3
- 2.3 Emission Limits 3

3.0 EMISSIONS TEST SUMMARY 4

4.0 TESTING PROCEDURES 6
- 4.1 Sampling Site Location 6
- 4.2 Test Methods and Procedures 6
- 4.3 Testing Equipment Schematics 7

5.0 QUALITY ASSURANCE AND QUALITY CONTROL 8
- 5.1 Documentation and Tracking 8
- 5.2 Sampling Protocol 8
- 5.3 Quality Assurance 8
- 5.5 Instrument Calibration, Maintenance and Standards 9
- 5.6 Data Acquisition, Reductions and Validation 9

LIST OF TABLES

Table 1a: ExxonMobil F-551 Hydrogen Plant Process Heater Compliance Demonstration ii
Table 1b: ExxonMobil B-8 Boiler Compliance Demonstration ii
Table 2: ExxonMobil F-551 Hydrogen Plant Process Heater Test Results 4
Table 3: ExxonMobil B-8 Boiler Test Results 5

APPENDICES

APPENDIX A: SOURCE TEST PROTOCOL AND CORRESPONDENCE
APPENDIX B: F-551 TEST DATA
APPENDIX C: F-551 OPERATING DATA
APPENDIX D: B-8 TEST DATA
APPENDIX E: B-8 OPERATING DATA
APPENDIX F: CALIBRATIONS, AUDITS AND CERTIFICATIONS
APPENDIX G: NOMENCLATURE AND FORMULAE

1.0 INTRODUCTION

Bison Engineering, Inc. (Bison) was retained by ExxonMobil Billings Refinery (ExxonMobil) to perform air quality emission testing services as cited in this report. ExxonMobil submitted a pretest protocol to Mr. Jim Hughes of the Montana Department of Environmental Quality (MDEQ) on September 2, 2010. The protocol specified the details involved in performing the tests, listed the pollutants to be measured, described the testing and analytical methods to be employed, specified the test dates, proposed operating parameters, and presented pretest quality assurance.

The protocol specified that the F-551 heater test was to be performed on October 7 or 8, 2010. Due to scheduling and operational issues, the test was performed on October 19, 2010. The test was performed without deviation from the test plan.

The protocol specified that the B-8 boiler test was to be performed on October 6, 2010. Due to scheduling and operational issues, the test was performed on October 29, 2010. The test was performed without deviation from the test plan.

This report summarizes the results from the testing project and the operating conditions of the process during the testing. The appendices of this report contain the pretest protocol, spreadsheets, testing field data, production data, nomenclature and formulae, equipment/analyzer calibrations and audits, and Protocol 1 gas certifications.

1.1 Program Organization

Bison is a full service air quality consulting company that provides ambient air and meteorological monitoring, air quality permitting, air quality modeling, regulatory negotiations, process-to-emissions optimization and emissions source testing services. Bison's ***Process and Emission Services*** team is led by Calvin Loomis, P.E., QSTI, Project Engineer and Team Leader. Additional team members are Bill Shaw, P.E., Project Engineer; Dave Blankenship, Senior Environmental Technician; Devin McCarthy, Staff Engineer; Jim Wollenberg, Environmental Technician; and Steve Fryberger, Air Specialist and Billings Branch Manager.

Facility Name:	ExxonMobil Billings Refinery		
	Address:	P.O. Box 1163	
		Billings, Montana 59103	
	Contact:	Joe Lierow, Environmental Coordinator	
	Phone:	(406) 237-0721	Fax: (406) 657-5374
	Email:	Joseph.w.Lierow@exxonmobil.com	
Permits:	Air Quality Permit #1564-23		
	Operating Permit #OP1564-05		

Consultant: Bison Engineering, Inc.
Address: 1111 Maggie Lane
Billings, MT 59101
Contact: Steve Fryberger, Air Specialist
Phone: (406) 896-1716 Fax: (406) 896-1725
Email: sfryberger@bison-eng.com

State Authority: Montana Department of Environmental Quality (MDEQ)
Address: Airport Industrial Park IP-9
1371 Rimrock Drive
Billings, Montana 59105-1978
Contact: Jim Hughes
Phone: (406) 247-4448 Fax (406) 247-4456
Email: jahughes@mt.gov

1.2 Project Personnel

The following personnel were on site during the emission tests or were associated with the project.

1.2.1 Bison Engineering, Inc.

The F-551 on-site testing was performed by Cal Loomis, Project Engineer, and Steve Fryberger, Air Specialist. The B-8 test was performed by Dave Blankenship, Senior Environmental Technician. The report was written by Cal Loomis.

1.2.2 ExxonMobil Billings Refinery

Joe Lierow was the primary plant contact while on-site, and he assisted Bison with obtaining production data.

1.2.3 Montana Department of Environmental Quality (MDEQ)

The pretest protocol was addressed to Jim Hughes.

2.0 EMISSION SOURCE INFORMATION

2.1 Facility Description

ExxonMobil owns and operates a petroleum refinery located near Billings, Montana. The plant is located in Yellowstone County, Township 1 North, Range 26 East, Sections 24 and 25.

2.2 Emission Source Description

Furnace F-551
To assist in the hydrotreating process, the refinery produces hydrogen in the Hydrogen Plant. Hydrogen is generated via the steam reforming process. This process involves reacting hydrocarbon feeds with steam at high temperatures to produce a hydrogen-rich product gas. This process is carried out in the F-551 process heater. F-551 has a maximum heat input rate of approximately 160 MMBtu/hr.

Boiler (B-8)
The B-8 boiler has historically been used as a backup boiler to the refinery. It provides process steam to the refinery in the event that a primary boiler is non-operational (e.g., CCOB or KCOB), if the neighboring co-generation facility (Billings Generation, Inc.) fails to supply adequate steam, or if the refinery needs additional steam. The boiler has historically operated less than 1,000 hours per year. The boiler currently operates on natural gas. Although it is permitted to run on refinery fuel gas (RFG), it is not capable of combusting RFG at this point in time. The boiler is an NSPS Subpart Dc boiler and has a maximum permitted heat input capacity of 99 MMBtu/hr based on a 24-hour average.

2.3 Emission Limits

Furnace F-551
The NOx emissions from F-551 shall not exceed 23.35 lb/hr (ARM 17.8.749).

Boiler (B-8)
1. NOx emissions from B-8 shall not exceed:
   - 0.04 lb/MMBtu based on a one-hour average, not applicable during start-up and shutdown (ARM 17.8.749 and ARM 17.8.752).
   - 3.96 lb/hr based on a one-hour average (ARM 17.8.749)

2. CO emissions from B-8 shall not exceed:
   - 0.04 lb/MMBtu based on a one-hour average, not applicable during start-up and shutdown (ARM 17.8.749 and ARM 17.8.752).
   - 3.96 lb/hr based on a one-hour average (ARM 17.8.749)

3.0 EMISSIONS TEST SUMMARY

The following tables present the results from the testing projects. The tables present the emissions data in parts per million volume dry (ppmvd), pounds per hour (lb/hr), and pounds per million British thermal units (lb/MMBtu).

Table 2: ExxonMobil F-551 Hydrogen Plant Process Heater Test Results

ExxonMobil Billings Refinery F-551 Hydrogen Plant Process Heater Test Results October 19, 2010					
	Run 1	**Run 2**	**Run 3**	**Avg.**	**Limitations**
Test time	12:10	13:20	14:34	NA	NA
Test duration, minutes	60	60	60	NA	≥ 60
O_2, %	9.8	10.2	10.5	10.2	NA
NOx, ppmdv	82.8	87.9	83.7	84.8	NA
NO_2, lbs/hr	17.92	18.87	18.81	18.53	23.35
Operating Conditions					
Heat input, MMBtu/hr	110.2	105.7	107.8	107.9	NA
RFG heating value, Btu/scf	1,615			NA	NA

The source listed above was tested on the date and times presented in the table. The testing parameters met the required on-site and post-test quality assurance requirements set forth in the methods. Instrumental sampling, calibration error, system bias and system drift data were within the tolerances of the methods. The calibrations and the testing data were recorded on a data acquisition system (DAS); the data can be found in an appendix of this report. The results of the bias test, calibrations, and audits were entered into a spreadsheet that can be found in an appendix of this report.

Table 3: ExxonMobil B-8 Boiler Test Results

ExxonMobil Billings Refinery B-8 Boiler Test Results October 29, 2010					
	Run 1	**Run 2**	**Run 3**	**Avg.**	**Limitations**
Test time	08:49	09:58	11:09	NA	NA
Test duration, minutes	60	60	60	NA	≥ 60
O_2, %	3.4	3.4	3.3	3.4	NA
NOx, ppmdv	27.8	28.4	29.4	28.6	NA
CO, ppmdv	0.18	0.16	0.18	0.18	NA
NO_2, lbs/hr	2.89	2.94	3.04	2.96	3.96
CO, lbs/hr	0.01	0.01	0.01	0.01	3.96
NO_2, lb/MMBtu	0.035	0.035	0.036	0.035	0.04
CO, lb/MMBtu	0.0001	0.0001	0.0001	0.0001	0.04
Operating Conditions					
Heat input, MMBtu/hr	83.6	83.5	83.5	83.5	NA
Natural gas heating value, Btu/scf	1,010			NA	NA

The source listed above was tested on the date and times presented in the table. The testing parameters met the required on-site and post-test quality assurance requirements set forth in the methods. Instrumental sampling, calibration error, system bias and system drift data were within the tolerances of the methods. The calibrations and the testing data were recorded on a DAS and can be found in an appendix of this report. The results of the bias test, calibrations, and audits were entered into a spreadsheet that can be found in an appendix of this report.

4.0 TESTING PROCEDURES

4.1 Sampling Site Location

Sample site locations were determined by the appropriate test methods. Gaseous sampling was performed at a location free from stratification, post-control unit and fans using a three-point probe.

4.2 Test Methods and Procedures

Bison testing personnel performed the following EPA methods as described in Title 40, Code of Federal Regulations (CFR), Part 60, Appendix A:

EPA Reference Method 3A, "*Determination of Oxygen and Carbon Dioxide Concentrations in Emissions from Stationary Sources (Instrumental Analyzer Procedure).*" The objective of Method 3A is to determine the molecular weight of the source stream by determining oxygen (O_2) and carbon dioxide (CO_2) concentrations in the stack gas stream. The principle is to extract a gas sample from a stationary source and route the sample through a conditioning system to a paramagnetic oxygen analyzer and an infrared carbon dioxide analyzer for the measurement of O_2 and CO_2 in percentages (%). The O_2 and CO_2 analyzers calibration adjustments are performed by sending EPA Protocol 1 gas directly to the analyzers. A system calibration is performed by sending calibration gas to the probe and through the system to the analyzers. The calibration error, system bias and system drift data, and measured concentrations are recorded on a DAS.

EPA Reference Method 7E, *"Determination of Nitrogen Oxides Emissions from Stationary Sources (Instrumental Analyzer Procedure)."* The objective of Method 7E testing is to determine the NOx concentration from the source. Method 7E entails extraction of a gas sample from a stationary source and routing the sample through a conditioning system to an analyzer for the measurement of NOx (NO and NO_2) in ppmvd. The NO_2 analyzer calibration adjustment is performed by sending EPA Protocol 1 gas directly to the analyzer. A system bias check is performed by sending calibration gas to the probe and through the system to the analyzer. The calibration error, system bias and system drift data, and measured concentrations are recorded on a DAS for permanent record.

EPA Reference Method 10, "*Determination of Carbon Monoxide Emissions from Stationary Sources (Instrumental Analyzer Procedure).*" The objective of Method 10 is to determine the CO concentrations from the source. Method 10 entails extraction of a gas sample from a stationary source and routing the sample through a conditioning system to an analyzer for the measurement of CO in ppmvd. The CO analyzer calibration adjustment is performed by sending EPA Protocol 1 gas directly to the analyzer. A system bias check is performed by sending calibration gas to the probe and through the system to the analyzer. The calibration error, system bias and system drift data, and measured concentrations are recorded on a DAS for permanent record.

EPA Reference Method 19, "*Determination of Sulfur Dioxide Removal Efficiency and Particulate Matter, Sulfur Dioxide, and Nitrogen Oxides Emissions Rates.*" Method 19 is employed for the determination of boiler NO_X emissions. Results from Methods 3A, 7E and natural gas dry F factor (F_d) (from Table 19-1) are employed to calculate a NO_X emission rate (E) according to the following steps.

Step 1: Calculate NO_X in pounds per standard cubic feet (lbs/scf). Method 19, Table 19-1, provides factors to convert ppm NO_X to lb/scf.

$$C_d = NO_X \text{ ppm} \times 1.194\times10^{-7} = NO_X \text{ lbs/scf}$$

Step 2: Calculate fuel F_d factor using the fuel ultimate analysis and Method 19, Equation 19-13.

Eq. 19-13 $$F_d = \frac{K(k_{hd}\%H + K_c\%C + K_s5S + K_n\%N - K_o\%O)}{GCV}$$

Step 3: Calculate NO_X results in pounds per million British thermal units (lbs/MMBtu) using Table 19-1 "Factors for Various Fuels," using the F_d factor established in Step 2.

$$E = C_d F_d \frac{20.9}{(20.9 - \%O_2)}$$

Where: E = pollutant emission rate (lbs/MMBtu)
Cd = pollutant concentration dry basis (lbs/scf)

4.3 Testing Equipment Schematics

Typical Layout of a Gaseous Sampling System

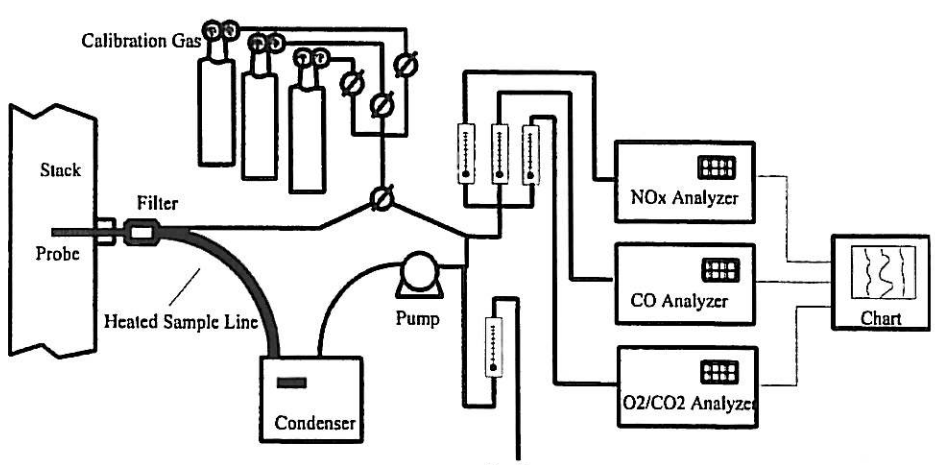

5.0 QUALITY ASSURANCE AND QUALITY CONTROL

5.1 Documentation and Tracking

Bison uses a project number for document control and tracking for all projects. Each project that Bison works on is assigned a project number. All documentation pertaining to that project is filed in the same place under that project number. This assures all pertinent information can be found easily at a later date.

The tracking number for the B-8 project is **EXX210242.**
The tracking number for the F-551 project is **EXX210245.**

Bison's testing project leader signs an "Emission Source Test Certification" to document and authenticate that the testing was performed according to the methods and applicable requirements.

Any changes or revisions to the Source Test Protocol are kept with the protocol and appended to the source test report. Any correspondence from the regulatory agency regarding the protocol is also appended to the source test report.

5.2 Sampling Protocol

Bison's test, laboratory, reporting, and quality assurance procedures conform to the requirements specified in the *Quality Assurance Handbook for Air Pollution Measurement Systems, Vol. III, Stationary Source Specific Methods,* published by the U.S. Environmental Protection Agency in August, 1977, as revised and amended (cat. #EPA-600/4-77-027b).

The individual test methods specify handling procedures for physical samples (liquids, traps, etc.). Bison follows the procedures outlined in the appropriate methods as described in EPA 40 CFR Part 60, Appendix A and Appendix B.

5.3 Quality Assurance

Bison's quality assurance program is designed to ensure that all source testing methods are followed and are performed by competent, experienced personnel. Bison's equipment is properly calibrated and maintained in good working order. Procedures for sample collection, recovery, and analysis are performed according to applicable EPA methods. Bison's practices conform to the procedures in the Environmental Protection Agency (EPA) *Quality Assurance Handbook for Air Pollution Measurement Systems*, Volume 3, EPA-600/4-77-0276, 1977, as amended.

Bison personnel calibrate equipment and instruments using standards when applicable or per the procedures of National Institute of Standards and Technology (NIST). Bison's equipment is manufactured to meet all applicable EPA criteria and parameters. Bison

defines a calibration as the procedure of changing a measurement system or device to match a constant or standard measurement system or device; an "audit" checks the variance between the value and a standard or a precalibration.

Emission testing quality assurance checks and quality controls (QA/QC) require three steps: before, during, and after field testing. "Before" QA/QC procedures are performed in Bison's lab, "during" QA/QC checks are recorded on the field data sheets, and "after" QA/QC procedures are performed at Bison's lab. The data from the QA/QC procedures can be found in the appendices. The following table describes Bison's QA/QC, calibration and audit procedures and schedule.

5.4 Instrument Calibration, Maintenance and Standards

Bison uses calibration gases that are certified as EPA Protocol 1 gases and are purchased from Scott Specialty Gases. The calibration gas certifications are included in an appendix of this report.

Calibration adjustments of the analyzers are performed by sending the Protocol 1 gas directly to the analyzers. A system audit is performed before and after each test run by sending calibration gas to the probe and through the system to the analyzers. The results of these calibrations and audits can be found in the spreadsheets located in the appendices.

5.5 Data Acquisition, Reductions and Validation

The data is then entered into computer spreadsheets where QA/QC and emission calculations are performed according to the methods. An appendix of this report contains nomenclature and formulae for reference. All raw field data is supplied in an appendix to this report. The appendix may contain some example calculations; additional examples will be supplied upon request.

Rounding of Significant Figures

If the first digit to be discarded is less than five, the last digit retained should not be changed. When the first digit discarded is greater than five, or if it is a five followed by at least one digit other than 0, the last figure retained should be increased by one unit. When the first digit discarded is exactly five, followed only by zeros, the last digit retained should be rounded upward if it is an odd number, but no adjustment made if it is an even number. For example, if the emission standard is 90, than 90.357 would be rounded to 90, 90.639 would be rounded to 91, 90.500 would be rounded to 90, and 91.500 would be rounded to 92.

Standard	Number	Rounded To
90	90.357	90
90	90.639	91
90	91.500	9

APPENDIX A:
SOURCE TEST PROTOCOL AND CORRESPONDENCE

Cal Loomis

From: Steve Fryberger
Sent: Tuesday, November 30, 2010 2:03 PM
To: Cal Loomis
Subject: FW: B-8 and F-551 Source Test Protocol

Attachments: ExxonMobil B-8 and F-551 Source Test Protocol.pdf

ExxonMobil
nd F-551 So

Cal:

Here is the notification Joe copied me on.

Steve

-----Original Message-----
From: joseph.w.lierow@exxonmobil.com [mailto:joseph.w.lierow@exxonmobil.com]
Sent: Thursday, September 02, 2010 4:59 PM
To: Jahughes@mt.gov
Cc: steve.marts@exxonmobil.com; Steve Fryberger
Subject: B-8 and F-551 Source Test Protocol

Jim,
Attached is the source test protocol for the B-8 and F-551 units at the Billings Refinery. We are scheduled to test these two units October 6-8, 2010. Please provide any comments. I will also be sending a copy in the mail.
Thanks,
Joe

(See attached file: ExxonMobil B-8 and F-551 Source Test Protocol.pdf)
~~~~~~
Joe Lierow, P.E.
Environmental Coordinator
ExxonMobil Billings Refinery
700 ExxonMobil Rd.
P.O. Box 1163
Billings, MT 59103
Tel: (406) 237-0721
Fax: (406) 657-5343
~~~~~~

Information from ESET NOD32 Antivirus, version of virus signature database 5662 (20101130)

The message was checked by ESET NOD32 Antivirus.

http://www.eset.com

Compliance Demonstration Emission Testing Protocol
B-8 Boiler and F-551 Hydrogen Plant Process Heater

EXXONMOBIL BILLINGS REFINERY
BILLINGS, MONTANA

MDEQ Air Quality Permit #1564-23

Prepared for:

ExxonMobil

P.O. Box 1163
700 ExxonMobil Road
Billings, Montana 59103

Prepared by:

BISON ENGINEERING, INC.

1400 11th Avenue
Helena, MT 59601
(406) 442-5768
www.bison-eng.com

September 2, 2010

TABLE OF CONTENTS

1.0 Introduction 1
- 1.1 Test Project Objectives 1
- 1.2 Test Program Organization 1
- 1.3 Test Date 2
- 1.4 Report Date 2

2.0 Emission Source Information 3
- 2.1 Facility Description 3
- 2.2 Emission Source Description 3
- 2.3 Emission Limits 3

3.0 Source Testing Procedures 5
- 3.1 Sampling Site Location 5
- 3.2 Test Methods 5
- 3.3 Instrument and Equipment Schematics 7
- 3.4 Safety Considerations and Working Conditions 7
- 3.5 Minimum Detection Limitations 7

4.0 Quality Assurance and Quality Control Procedures 8
- 4.1 Documentation, Tracking and Certifications 8
- 4.2 Sample Handling Protocol 8
- 4.3 Audit Samples 8
- 4.4 Equipment and Instrumentation Calibration, Audits and Maintenance 9
- 4.5 Instrument Calibration Gases 10
- 4.6 Sample Solution Pre-test QA 10
- 4.7 Barometric Pressure and Station Pressures 10
- 4.8 Data Collection, Reduction and Validation 10

LIST OF TABLES

Table 1: B-8 Boiler Test Matrix 6
Table 2: Equipment and Instrumentation Calibration and Audit Procedure 12
Table 3: Pretest Sample and Recovery Solution QA 13

1.0 INTRODUCTION

Bison Engineering, Inc. (Bison) has been retained by ExxonMobil to perform a determination of NOx and CO emission from the B-8 Boiler Stack as well as NOx emissions from the F-551 process heater stack.

1.1 Test Project Objectives

The objective of this pretest protocol is to present the details of the source, list the pollutants to be measured, describe the methods to be employed and the details associated with reporting the data. This protocol describes what pollutants are to be tested; lists the methods used to determine the emission concentrations, rates and relative accuracies; and describes the laboratory procedures and quality assurance procedures involved to produce repeatable and reliable results.

1.2 Test Program Organization

Bison is a full service air quality consulting company that provides ambient air monitoring and meteorological monitoring, air quality permitting, air quality modeling, regulatory negotiations, process-to-emissions optimization and source testing services. Bison's ***Process and Emission Services*** team is led by Calvin Loomis, P.E. and certified as a Qualified Source Testing Individual (QSTI) with the Source Evaluation Society. Additional team members are Steve Fryberger, Billings Branch Manager/Air Specialist; Bill Shaw, P.E., Project Engineer; Dave Blankenship, Senior Environmental Technician; Jim Wollenberg, Field Technician; and Devin McCarthy, Staff Engineer. Emissions testing may be led by any of the above-mentioned personnel and assisted by additional staff members

Facility Info:

ExxonMobil Billings Refinery
Address: P.O. Box 1163
700 Exxon Road
Billings, Montana 59103
Contact: Joe Lierow, Environmental Coordinator
Phone: 406/237-0721 Fax: 406/657-5374

MDEQ Air Quality Permit: 1564-22
Operating Permit: OP1564-03

Consultant:

Bison Engineering, Inc. Helena, MT
Address: 1111 Maggie Lane
Billings, MT 59101
Contacts: Steve Fryberger, Project Engineer, ext. 116
Phone: 406/896-1716 Fax: 406/896-1725
Email: sfryberger@bison-eng.com

Bison Engineering, Inc. Billings, MT
Address: 1411 4th Avenue North
Billings, MT 59101

Contacts: Steve Fryberger, ext. 116
Phone: 406/986-1716

State Authority: Montana Department of Environmental Quality (MDEQ)
Address: Airport Industrial Park IP-9
1371 Rimrock Drive
Billings, MT 59605-1978
Contact: Jim Hughes
Phone: 406/247-4448 Fax: 406/247-4456

1.3 Test Dates

In keeping with agreed procedures, ExxonMobil and Bison are scheduled to perform the testing as follows:
B-8 Boiler, October 6, 2010.
F-551 Process Heater, October 7 or 8, 2010.

1.4 Report Date

Bison and ExxonMobil will submit the source test report to MDEQ within 60 days following the conclusion of the test project.

2.0 EMISSION SOURCE INFORMATION

2.1 Facility Description

ExxonMobil owns and operates a petroleum refinery located near Billings, Montana. The plant is located in Yellowstone County, Township 1 North, Range 26 East, Sections 24 and 25.

2.2 Emission Source Description

The B-8 boiler has historically been used as a backup boiler to the refinery. It provides process steam to the refinery in the event that a primary boiler is non-operational (e.g., CCOB or KCOB), if the neighboring co-generation facility (Billings Generation, Inc.) fails to supply adequate steam, or if the refinery needs additional steam. The boiler has historically operated less than 1,000 hours per year. The boiler currently operates on natural gas, although it is permitted to run on refinery fuel gas (RFG), but it is not capable of combusting RFG at this point in time. The boiler has a maximum permitted heat input capacity of 99 MMBtu/hr based on a 24-hour average.

To assist in the hydrotreating process, the refinery produces hydrogen in the Hydrogen Plant. Hydrogen is generated via the steam reforming process. This process involves reacting hydrocarbon feeds with steam at high temperatures to produce a hydrogen-rich product gas. This process is carried out in the F-551 process heater. F-551 has a maximum heat input rate of approximately 160 MMBtu/hr.

2.3 Emission Limits

Furnace F-551

1. The NOX emissions from F-551 shall not exceed 23.35 lb/hr (ARM 17.8.749).

3. The NOX emissions from F-551 shall not exceed 75.55 tons per rolling 12-month period (ARM 17.8.752).

Boiler (B-8)

1. NOX emissions from B-8 shall not exceed:

0.04 lb/MMBtu based on a one-hour average, not applicable during start-up1 and shutdown1 (ARM 17.8.749 and ARM 17.8.752).

3.96 lb/hr based on a one-hour average (ARM 17.8.749)

17.3 tons per rolling 12-month period (ARM 17.8.749)

2. CO emissions from B-8 shall not exceed:

0.04 lb/MMBtu based on a one-hour average, not applicable during start-up1 and shutdown1 (ARM 17.8.749 and ARM 17.8.752).

3.96 lb/hr based on a one-hour average (ARM 17.8.749)

17.3 tons per rolling 12-month period (ARM 17.8.749)

3.0 SOURCE TESTING PROCEDURES

3.1 Sampling Site Location

Testing will be performed at sample locations dictated by Method 1. Sample sites are cited in the emission source description section of this document. Method 1-4 and gaseous measurements will be extracted from the stack ports located at the stack platform. Should alterations to this plan be required, Bison will contact MDEQ for confirmation of changes; if contact with MDEQ is not possible, Bison will proceed using best available methods and good engineering practices. Gaseous sampling will be performed using a three-point sample probe. Moisture measurements will be determined from the results of the Method 5 tests that are to be run concurrently with the RA testing.

ExxonMobil B-8 Boiler and F-551 Process Heater Test Matrix			
Source	**Method**	**Parameter**	**Test Plan and Comments**
B-8 Boiler Stack	Method 19	Volumetric Flow by calculation	Three 1-hour test runs will be performed
	Method 7E	Oxides of Nitrogen	
	Method 10	Carbon Dioxide	
F-551 Process Heater Stack	Methods 19	Volumetric Flow by calculation	Three 1-hour test runs will be performed
	Method 7E	Oxides of Nitrogen	

3.2 Test Methods

Bison testing personnel will employ the following EPA methods described in Title 40, Code of Federal Regulations (CFR), Part 60, Appendix A and B. Deviations to any method listed below will be highlighted.

EPA Reference Method 7E, *"Determination of Nitrogen Oxides Emissions from Stationary Sources (Instrumental Analyzer Procedure)."* The objective of Method 7E testing is to determine the NOx concentration from the source. Method 7E entails extraction of a gas sample from a stationary source and routing the sample through a conditioning system to an analyzer for the measurement of NOx (NO and NO_2) in ppmvd. The NO_2 analyzer calibration adjustment is performed by sending EPA Protocol 1 gas directly to the analyzer. A system bias check is performed by sending calibration gas to the probe and through the system to the analyzer. The calibration error, system bias and system drift data, and measured concentrations are recorded on a data

acquisition system (DAS) for permanent record.

EPA Reference Method 10, "*Determination of Carbon Monoxide Emissions from Stationary Sources (Instrumental Analyzer Procedure).*" The objective of Method 10 is to determine the CO concentrations from the source. Method 10 entails extraction of a gas sample from a stationary source and routing the sample through a conditioning system to an analyzer for the measurement of CO in ppmvd. The CO analyzer calibration adjustment is performed by sending EPA Protocol 1 gas directly to the analyzer. A system bias check is performed by sending calibration gas to the probe and through the system to the analyzer. Bison uses a Thermo Environmental Instruments 48C CO Analyzer, Serial Number 48C-55909-305. An ascarite carbon dioxide (CO_2) removal tube is not used; should CO emissions be at or above permit limits, Bison may perform Method 10 Equation 10-1 using the CO_2 results from Method 3A to extract the percent CO_2 from the CO concentrations. The calibration error, system bias and system drift data, and measured concentrations are recorded on a stripchart or DAS for permanent record.

EPA Reference Method 19, "*Determination of Sulfur Dioxide Removal Efficiency and Particulate Matter, Sulfur Dioxide, and Nitrogen Oxides Emissions Rates.*" Method 19 is employed for the determination of boiler NO_X emissions. Results from Methods 3A, 7E and natural gas dry F factor (F_d) (from Table 19-1) are employed to calculate an NO_X emission rate (E) according to the following steps.

Step 1: Calculate NO_X in pounds per standard cubic feet (lbs/scf). Method 19, Table 19-1, provides factors to convert ppm NO_X to lb/scf.

$$C_d = NO_X \text{ ppm} \times 1.194\times10^{-7} = NO_X \text{ lbs/scf}$$

Step 2: Calculate fuel F_d factor using the fuel ultimate analysis and Method 19, Equation 19-13.

Eq. 19-13 $$F_d = \frac{K(k_{hd}\%H + K_c\%C + K_s5S + K_n\%N - K_o\%O)}{GCV}$$

Step 3: Calculate NO_X results in pounds per million British thermal units (lbs/MMBtu) using Table 19-1 "Factors for Various Fuels," using the F_d factor established in Step 2.

$$E = C_d F_d \frac{20.9}{(20.9 - \%O_2)}$$

Where: E = pollutant emission rate (lbs/MMBtu)
Cd = pollutant concentration dry basis (lbs/scf)

BTU content of the refinery fuel gas and stack flow will be calculated from the ultimate fuel gas analysis performed on samples taken about midway in each test period. The ultimate fuel analysis will be used to calculate an F_d factor (dry standard cubic feet per million BTU). BTU content of the gas, ppm values and the F_d factor provide all of the inputs required to calculate lb/MMBtu emission factors.

3.3 Instrument and Equipment Schematics

The Bison instrument trailer used for the gaseous compliance demonstration is depicted in Figure 1.

Figure 1: Bison Emission Sampling Trailer (BEST) Schematic

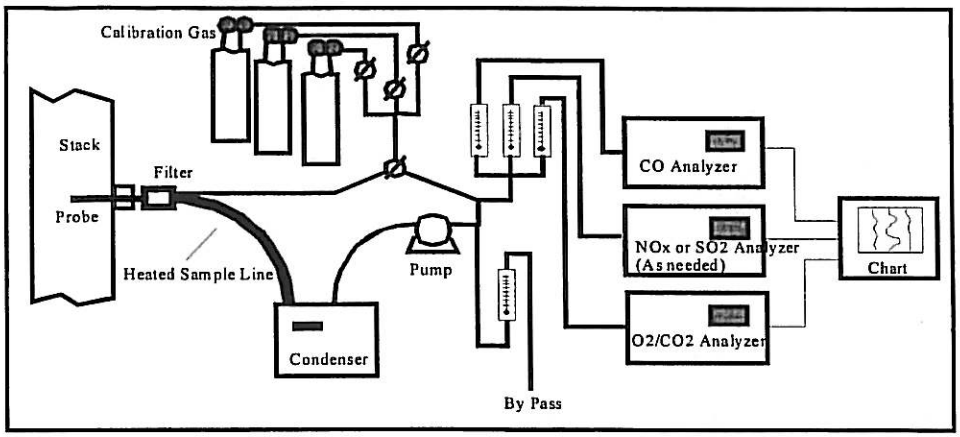

3.4 Safety Considerations and Working Conditions

Bison personnel will adhere to facility safety requirements. Bison personnel may be required to hoist the sampling equipment to the source being tested. Yellow caution tape may be placed to alert people to overhead work. When required, radio or hand signals will be used for safe lifting. Hazards associated with this facility include elevated working heights, ladders, electrical usage, overhead power lines, heated equipment and hot surfaces. These sources may require the use of powered man-lift equipment or scaffolding. Test equipment may need to be rope-hoisted, lifted or carried up staircases. Testers will have the following safety equipment at hand: hard hat; full-length pants, shirt, and/or coveralls; goggles (as required); full-height (over the ankle) work boots; hearing protection; work gloves; appropriate half- or full-face respirators.

4.0 QUALITY ASSURANCE AND QUALITY CONTROL PROCEDURES

4.1 Documentation, Tracking and Certifications

Bison uses a project number for document control and tracking for all projects. Each project that Bison works on is assigned a project number. All documentation pertaining to that project is filed in the same place under that project number. This assures all pertinent information can be found easily at a later date.

The tracking number for this project is **EXX210242.**

Bison's testing project leader will sign an "Emission Source Test Certification" to document and authenticate that the testing was performed according to the methods and applicable MDEQ requirements.

Any changes or revisions to the Source Test Protocol are kept with the protocol and appended to the source test report. Any correspondence from the appropriate authority regarding the protocol is also appended to the source test report.

4.2 Equipment and Instrument Calibration, Audits and Maintenance

Bison's laboratory personnel periodically calibrate equipment and instruments with standards traceable to the National Institute of Standards and Technology (NIST). All equipment requiring calibrations for the methods described in Section 3.5 will meet the appropriate criteria as specified in EPA 40 CFR Part 60, Appendix A. The test report will include applicable data as an appendix.

The following table shows Bison's calibration and audit procedure schedule. Bison defines a calibration as the procedure of changing a measurement system or device to match a constant or standard measurement system or device, whereas an "audit" is checking the variance between a measurement system or device and a constant or a standard measurement system or device. Bison's equipment meets applicable EPA method calibration parameters. The final test report will include applicable calibration data as an appendix.

Table 2. Instrumentation Calibration and Audit Procedure

Equipment Calibration and Audit Procedure		
Unit	**Schedule and Requirement**	**Reference**
Gaseous Sampling Equipment Calibration and Audit Procedures		
Analyzers	Analyzer calibration error, ACE	Method 7E, 8.5
	NO_2 to NO conversion test	Method 7E, 8.2.4
	Analyzer interference checks	Method 7E, 8.2.7
Sample system	Sample system bias check, SB	Method 7E, 8.5

	Zero and calibration drift tests	Method , 7E.8.5

4.3 Instrument Calibration Gases

The calibration gases used in this project are all certified as EPA Protocol 1 gases, and are purchased from Scott Specialty Gases. The calibration gas certifications will be included in the test report as an appendix. Bison uses a field barometric pressure gauge which is calibrated prior to each field deployment. Temperature calibrations are performed using a mercury-in-glass NIST-traceable thermometer.

4.4 Barometric Pressure and Station Pressures

Bison's Helena office houses a standard mercury in-glass barometer. Field barometers are calibrated prior to each mobilization and are used at the testing location to establish the station pressures.

4.5 Data Collection, Reduction and Validation

Field data such as velocity measurements or isokinetic sampling data are hand-recorded on field data sheets. The data is then entered into computer spreadsheets where QA/QC and emission calculations are performed according to the method calculations. Gaseous emissions test data is recorded on a stripchart or data acquisition system, a copy of which will be supplied in the emission test report. All additional field data will be supplied in an appendix to the report. Test data and reports are reviewed for technical content by a staff engineer or staff scientist, and final reviews are performed by either the team leader or senior staff. All field data and spreadsheets will be supplied in an appendix to the report. Sample calculations are not included with this protocol but can be submitted upon request.

APPENDIX B:
F551 TEST DATA

Bison Engineering, Inc.
Method 7E Nitrogen Oxides
Calibration Error, System Bias and System Drift
NOx molecular weight of 46

Company	ExxonMobil	Source	F551
Facility	Refinery	Date	Oct 19, 10
Location	Billings		

			Initial Values			Final Values										
		Analyzer Cal. Response	System Cal Response	Pre test System Cal. Bias % of span	pass/fail	System Cal Response	Post test System Cal. Bias % of span	pass/fail	System Drift % of span	pass/fail	Analyzer Span	Avg Gas Conc	Effluent Gas Conc	Conc. O2	Meth 19 Nox lb/hr	Instrument Cal. Reference Gas
Run 1	zero	0.07	1.00	0.91	pass	1.05	0.96	pass	0.05	pass						
	upscale	49.93	48.86	-1.05	pass	48.92	-0.99	pass	0.06	pass	102	79.47	82.80	9.84	17.86	50.2
Run 2	zero	0.07	1.05	0.96	pass	0.03	-0.04	pass	-1.00	pass						
	upscale	49.93	48.92	-0.99	pass	48.01	-1.88	pass	-0.89	pass	102	83.89	87.86	10.20	18.80	50.2
Run 3	zero	0.07	0.03	-0.04	pass	1.03	0.94	pass	0.98	pass						
	upscale	49.93	48.01	-1.88	pass	47.88	-2.01	pass	-0.13	pass	102	79.58	83.71	10.47	18.75	50.2
				> 5%			> 5%		> 3%							

ANALYZER CAL. ERROR	Zero	Low	High
Calibration gas standards	0.0	50.2	102.0
Cal gas analyzer response	0.07	49.9	99.8
Analyzer Cal. Error	0.07	-0.26	-2.19
Analyzer Cal. Error < 2%	pass	pass	fail

	Run 1	Run 2	Run 3	Run 4
60 min	79.47	83.89	79.58	

Cell D15 "Aanalyzer Cal. Response" requires either Low Mid or High Cal. Gas analyzer response values (F28, G28 or H28)
Cell P15 "Instrument Cal. Reference Gas" requires either Low, Mid or High Cal. Gas values (F27, G27 or H27)

		Run 1	Run 2	Run 3	Average
NOx Parts Per Milliion, Cd	ppm	82.8	87.9	83.7	84.8
Meth 19, Table 19-1	lbs/scf	9.89E-06	1.05E-05	9.99E-06	0.0
Meth 19, Fd @ 0%O2	dscf/MMBtu	8710	8710	8710	
Oxygen, O2	% O2	9.84	10.20	10.47	10.2
Meth 19, Stack flow	dscf/MMBtu	16455	17009	17458	16974.2
F551 n.g. n.g. usage	MMscf/day	1.64	1.57	1.60	1.6
F551 n.g. n.g. usage	scf/hr	68222	65471	66758	66817.1
n.g. Btu	Btu/scf	1615	1615	1615	1615.0
F551 heat input	Btu/hr	110179114	105735263	107814580	107909652
F551 heat input	MMBtu/hr	110.18	105.74	107.81	107.9
F551 Stack flow	dscf/hr	1812976	1798500	1882248	1831241
NOx mass rate	lbs/hr	17.924	18.866	18.813	18.53

Bison Engineering, Inc.
Method 3A Oxygen
Calibration Error, System Bias and System Drift

Company	ExxonMobil	Source	F551
Facility	Refinery	Date	Oct 19, 10
Location	Billings		

			Initial Values			Final Values								
		Analyzer Cal. Response	System Cal Response	Pre test System Cal. Bias % of span	pass/fail	System Cal Response	Post test System Cal. Bias % of span	pass/fail	System Drift % of span	pass/fail	Span gas	Avg Gas Conc	Effluent Gas Conc	Instrument Cal. Reference Gas
Run 1	zero	0.05	0.07	0.09	pass	-0.14	-0.95	pass	-1.04	pass				
	upscale	9.93	9.83	-0.45	pass	9.64	-1.44	pass	-0.99	pass	20	9.54	9.84	10
Run 2	zero	0.05	-0.14	-0.95	pass	-0.23	-1.39	pass	-0.45	pass				
	upscale	9.93	9.64	-1.44	pass	9.72	-1.03	pass	0.41	pass	20	9.94	10.20	10
Run 3	zero	0.05	-0.23	-1.39	pass	-0.62	-3.33	pass	-1.93	pass				
	upscale	9.93	9.72	-1.03	pass	9.62	-1.54	pass	-0.50	pass	20	10.26	10.47	10
				> 5%			> 5%		> 3%					

ANALYZER CAL. ERROR	Zero	Low	High
Calibration gas standards	0	10	20
Cal gas analyzer response	0.05	9.93	19.88
Analyzer Cal. Error	0.23	-0.37	-0.62
Analyzer Cal. Error < 2%	pass	pass	pass

	Run 1	Run 2	Run 3	Run 4	Run 5
60 min	9.54	9.94	10.26		

ExxonMobil
Refinery
Billings

Date/Time mm/dd/yy hh:mm:ss	NOx RUN ppm	O2 RUN %	NOx 10M ppm	O2 10M %	NOx 60M ppm	O2 60M %	NOx Cal ppm	O2 Cal %
10/19/10 11:21:33	-2.08	20.28						
10/19/10 11:22:33	-2.09	20.27						
10/19/10 11:23:33	-2.05	20.26						
10/19/10 11:24:33	-2.06	20.25						
10/19/10 11:25:33	-2.05	20.23						
10/19/10 11:26:33	-2.06	20.23						
10/19/10 11:27:33	-2.03	18.35						
10/19/10 11:28:33	13.58	9.52						
10/19/10 11:29:33	52.18	9.45						
10/19/10 11:30:33	54.51	12.93						
10/19/10 11:31:33	29.24	20.16						
10/19/10 11:32:33	-0.85	20.16						
10/19/10 11:33:33	-1.05	20.15						
10/19/10 11:34:33	-1.52	19.75						
10/19/10 11:35:33	-0.08	19.68					AZ	AZ
10/19/10 11:36:33	-0.04	19.86					-0.05	19.88
10/19/10 11:37:33	-0.04	11.78					AZ	AM
10/19/10 11:38:03	-0.04	10.82					0.07	9.93
10/19/10 11:38:33	-0.04	9.87						
10/19/10 11:39:33	-0.04	9.81						
10/19/10 11:40:33	-0.08	3.80						
10/19/10 11:41:33	55.04	0.11						
10/19/10 11:42:33	78.16	0.10						
10/19/10 11:43:33	78.85	0.09						
10/19/10 11:44:33	78.84	0.07						
10/19/10 11:45:33	79.01	0.06						
10/19/10 11:46:33	78.81	0.02						
10/19/10 11:47:33	45.21	0.13						
10/19/10 11:48:33	76.81	0.07						
10/19/10 11:49:33	96.33	0.06					AS	AZ
10/19/10 11:50:13	98.06	0.05					99.77	0.05
10/19/10 11:50:33	99.79	0.03						
10/19/10 11:51:33	98.96	-0.01						
10/19/10 11:52:33	51.21	-0.01						
10/19/10 11:53:33	4.10	0.04						
10/19/10 11:54:33	27.92	0.04					AM	AZ
10/19/10 11:55:13	38.90	3.37					49.93	0.03
10/19/10 11:55:33	49.88	6.70						
10/19/10 11:56:33	24.07	18.94						
10/19/10 11:57:33	33.25	5.93						
10/19/10 11:58:33	64.87	4.31						
10/19/10 11:59:33	55.87	0.11						
10/19/10 12:00:33	48.89	0.07					SM	SZ
10/19/10 12:00:43	48.89	1.80					48.86	0.07
10/19/10 12:01:33	48.89	3.54						
10/19/10 12:02:33	22.77	9.80					SZ	SM
10/19/10 12:03:33	0.80	9.84					1.00	9.83
10/19/10 12:04:33	0.46	16.74						
10/19/10 12:05:33	28.64	20.48						
10/19/10 12:06:33	37.44	20.49						
10/19/10 12:07:33	39.43	20.49					NO converter	
10/19/10 12:08:33	49.22	14.53					49.22	
10/19/10 12:09:33	75.25	10.47						
10/19/10 12:10:33	84.02	10.30					Begin Run 1 12:10	
10/19/10 12:11:33	84.69	10.33					Run 1	
10/19/10 12:12:33	83.37	10.23					Run 1	
10/19/10 12:13:33	83.54	10.05					Run 1	
10/19/10 12:14:33	83.69	9.93					Run 1	
10/19/10 12:15:33	80.90	9.64					Run 1	
10/19/10 12:16:33	80.88	9.51					Run 1	
10/19/10 12:17:33	78.41	9.45					Run 1	
10/19/10 12:18:33	77.88	9.16					Run 1	
10/19/10 12:19:33	79.60	9.26					Run 1	
10/19/10 12:20:03	81.15	9.43	81.60	9.74			Run 1	
10/19/10 12:20:33	82.71	9.59					Run 1	
10/19/10 12:21:33	84.39	9.95					Run 1	
10/19/10 12:22:33	84.04	10.06					Run 1	
10/19/10 12:23:33	85.07	10.16					Run 1	
10/19/10 12:24:33	84.88	10.10					Run 1	

10/19/10 12:25:33	87.56	10.13					Run 1	
10/19/10 12:26:33	85.38	10.27					Run 1	
10/19/10 12:27:33	85.24	10.32					Run 1	
10/19/10 12:28:33	85.53	10.26					Run 1	
10/19/10 12:29:33	83.70	10.39					Run 1	
10/19/10 12:30:03	83.29	10.38	84.87	10.17			Run 1	
10/19/10 12:30:33	82.89	10.36					Run 1	
10/19/10 12:31:33	83.91	10.05					Run 1	
10/19/10 12:32:33	84.25	9.94					Run 1	
10/19/10 12:33:33	84.89	9.83					Run 1	
10/19/10 12:34:33	84.76	10.04					Run 1	
10/19/10 12:35:33	81.39	9.93					Run 1	
10/19/10 12:36:33	81.23	9.89					Run 1	
10/19/10 12:37:33	82.72	9.75					Run 1	
10/19/10 12:38:33	82.40	9.92					Run 1	
10/19/10 12:39:33	80.74	10.12					Run 1	
10/19/10 12:40:03	80.50	10.01	82.79	9.96			Run 1	
10/19/10 12:40:33	80.25	9.91					Run 1	
10/19/10 12:41:33	82.04	9.82					Run 1	
10/19/10 12:42:33	82.58	9.76					Run 1	
10/19/10 12:43:33	81.23	9.93					Run 1	
10/19/10 12:44:33	79.38	9.88					Run 1	
10/19/10 12:45:33	79.39	9.67					Run 1	
10/19/10 12:46:33	78.39	9.92					Run 1	
10/19/10 12:47:33	76.76	9.52					Run 1	
10/19/10 12:48:33	78.74	9.53					Run 1	
10/19/10 12:49:33	77.24	9.38					Run 1	
10/19/10 12:50:03	77.06	9.34	79.45	9.70			Run 1	
10/19/10 12:50:33	76.88	9.31					Run 1	
10/19/10 12:51:33	75.39	9.48					Run 1	
10/19/10 12:52:33	73.89	9.42					Run 1	
10/19/10 12:53:33	73.75	9.21					Run 1	
10/19/10 12:54:33	74.08	9.21					Run 1	
10/19/10 12:55:33	74.10	8.84					Run 1	
10/19/10 12:56:33	75.92	8.85					Run 1	
10/19/10 12:57:33	74.06	8.81					Run 1	
10/19/10 12:58:33	73.07	8.48					Run 1	
10/19/10 12:59:33	74.05	8.54					Run 1	
10/19/10 13:00:03	73.23	8.52	74.30	8.97			Run 1	
10/19/10 13:00:33	72.40	8.49					Run 1	
10/19/10 13:01:33	71.71	8.50					Run 1	
10/19/10 13:02:33	71.25	8.66					Run 1	
10/19/10 13:03:33	72.42	8.64					Run 1	
10/19/10 13:04:33	73.08	8.88					Run 1	
10/19/10 13:05:33	73.23	8.97					Run 1	
10/19/10 13:06:33	75.59	8.78					Run 1	
10/19/10 13:07:33	76.10	8.73					Run 1	
10/19/10 13:08:33	75.74	8.72			Run 1	Run 1	Run 1	
10/19/10 13:09:33	75.75	8.67			Avg	Avg	Run 1	
10/19/10 13:10:03	75.01	8.73	73.83	8.72	79.47	9.54	End Run 1	
10/19/10 13:10:33	74.27	8.80						
10/19/10 13:11:33	74.09	8.69						
10/19/10 13:12:33	74.09	8.80						
10/19/10 13:13:33	35.80	9.66						
10/19/10 13:14:33	1.32	9.64					SZ	SM
10/19/10 13:14:43	1.16	9.53					1.05	9.64
10/19/10 13:15:33	1.01	9.42						
10/19/10 13:16:33	45.97	3.93						
10/19/10 13:17:33	49.96	-0.13					SM	SZ
10/19/10 13:18:03	49.45	0.32					48.92	-0.14
10/19/10 13:18:33	48.95	0.78						
10/19/10 13:19:33	64.43	8.86						
10/19/10 13:20:33	77.09	9.01					Begin Run 2 13:20	
10/19/10 13:21:33	77.27	9.06					Run 2	
10/19/10 13:22:33	79.28	9.08					Run 2	
10/19/10 13:23:33	79.62	9.19					Run 2	
10/19/10 13:24:33	78.95	9.28					Run 2	
10/19/10 13:25:33	80.26	9.23					Run 2	
10/19/10 13:26:33	80.10	9.27					Run 2	
10/19/10 13:27:33	80.78	9.13					Run 2	
10/19/10 13:28:33	80.62	9.21					Run 2	
10/19/10 13:29:33	81.61	9.26					Run 2	
10/19/10 13:30:03	82.12	9.40	79.88	9.20			Run 2	
10/19/10 13:30:33	82.62	9.54					Run 2	
10/19/10 13:31:33	79.63	9.71					Run 2	
10/19/10 13:32:33	81.44	9.64					Run 2	

10/19/10 13:33:33	83.09	9.64					Run 2	
10/19/10 13:34:33	83.77	9.71					Run 2	
10/19/10 13:35:33	83.79	9.82					Run 2	
10/19/10 13:36:33	84.96	9.94					Run 2	
10/19/10 13:37:33	86.60	9.88					Run 2	
10/19/10 13:38:33	86.93	9.96					Run 2	
10/19/10 13:39:33	87.93	10.10					Run 2	
10/19/10 13:40:03	86.76	10.17	84.22	9.83			Run 2	
10/19/10 13:40:33	85.60	10.24					Run 2	
10/19/10 13:41:33	84.92	10.28					Run 2	
10/19/10 13:42:33	86.15	10.05					Run 2	
10/19/10 13:43:33	86.59	10.13					Run 2	
10/19/10 13:44:33	84.61	9.91					Run 2	
10/19/10 13:45:33	86.25	9.83					Run 2	
10/19/10 13:46:33	86.25	9.86					Run 2	
10/19/10 13:47:33	84.94	10.02					Run 2	
10/19/10 13:48:33	84.12	9.95					Run 2	
10/19/10 13:49:33	84.46	10.04					Run 2	
10/19/10 13:50:03	84.88	10.09	85.39	10.03			Run 2	
10/19/10 13:50:33	85.29	10.14					Run 2	
10/19/10 13:51:33	84.98	10.05					Run 2	
10/19/10 13:52:33	86.28	9.96					Run 2	
10/19/10 13:53:33	85.96	9.99					Run 2	
10/19/10 13:54:33	86.28	9.92					Run 2	
10/19/10 13:55:33	86.28	10.07					Run 2	
10/19/10 13:56:33	85.60	10.01					Run 2	
10/19/10 13:57:33	86.13	10.21					Run 2	
10/19/10 13:58:33	85.64	10.26					Run 2	
10/19/10 13:59:33	85.96	10.18					Run 2	
10/19/10 14:00:03	85.69	10.29	85.84	10.09			Run 2	
10/19/10 14:00:33	85.43	10.41					Run 2	
10/19/10 14:01:33	84.13	10.26					Run 2	
10/19/10 14:02:33	84.93	10.33					Run 2	
10/19/10 14:03:33	85.62	10.31					Run 2	
10/19/10 14:04:33	84.13	10.32					Run 2	
10/19/10 14:05:33	85.13	10.42					Run 2	
10/19/10 14:06:33	83.80	10.44					Run 2	
10/19/10 14:07:33	84.13	10.25					Run 2	
10/19/10 14:08:33	84.12	10.17					Run 2	
10/19/10 14:09:33	85.91	10.17					Run 2	
10/19/10 14:10:03	85.60	10.24	84.72	10.30			Run 2	
10/19/10 14:10:33	85.28	10.31					Run 2	
10/19/10 14:11:33	83.46	10.39					Run 2	
10/19/10 14:12:33	82.73	10.36					Run 2	
10/19/10 14:13:33	84.64	10.24					Run 2	
10/19/10 14:14:33	84.30	10.27					Run 2	
10/19/10 14:15:33	83.10	10.13					Run 2	
10/19/10 14:16:33	84.79	10.14					Run 2	
10/19/10 14:17:33	81.94	10.15					Run 2	
10/19/10 14:18:33	81.93	10.15			Run 2	Run 2	Run 2	
10/19/10 14:19:33	81.95	10.10			Avg	Avg	Run 2	
10/19/10 14:20:03	82.44	10.10	83.28	10.22	83.89	9.94	End Run 2	
10/19/10 14:20:33	82.94	10.10						
10/19/10 14:21:33	83.27	10.16						
10/19/10 14:22:33	76.13	9.32						
10/19/10 14:23:33	5.84	9.73						
10/19/10 14:24:33	1.00	9.72						
10/19/10 14:25:33	0.33	9.72					SZ	SM
10/19/10 14:26:23	0.18	9.72					0.03	9.72
10/19/10 14:26:33	0.02	9.72						
10/19/10 14:27:33	1.19	7.57						
10/19/10 14:28:33	37.93	-0.20						
10/19/10 14:29:33	47.98	-0.25					SM	SZ
10/19/10 14:30:23	47.99	-0.24					48.01	-0.23
10/19/10 14:30:33	48.00	-0.23						
10/19/10 14:31:33	53.31	7.79						
10/19/10 14:32:33	83.45	10.68						
10/19/10 14:33:33	82.28	10.61					Begin Run 3 14:34	
10/19/10 14:34:33	82.29	10.53					Run 3	
10/19/10 14:35:33	80.77	10.38					Run 3	
10/19/10 14:36:33	82.63	10.39					Run 3	
10/19/10 14:37:33	82.28	10.56					Run 3	
10/19/10 14:38:33	82.62	10.65					Run 3	
10/19/10 14:39:33	81.94	10.48					Run 3	
10/19/10 14:40:33	82.27	10.58					Run 3	
10/19/10 14:41:33	79.81	10.54					Run 3	

10/19/10 14:42:33	78.14	10.40					Run 3	
10/19/10 14:43:33	77.94	10.25					Run 3	
10/19/10 14:44:13	78.61	10.21	80.85	10.46			Run 3	
10/19/10 14:44:33	79.27	10.17					Run 3	
10/19/10 14:45:33	78.84	10.20					Run 3	
10/19/10 14:46:33	79.46	9.98					Run 3	
10/19/10 14:47:33	79.96	10.01					Run 3	
10/19/10 14:48:33	78.45	10.03					Run 3	
10/19/10 14:49:33	77.28	9.86					Run 3	
10/19/10 14:50:33	78.35	10.29					Run 3	
10/19/10 14:51:33	75.96	10.07					Run 3	
10/19/10 14:52:33	78.79	10.05					Run 3	
10/19/10 14:53:33	79.80	10.07					Run 3	
10/19/10 14:54:13	79.64	10.13	78.64	10.07			Run 3	
10/19/10 14:54:33	79.47	10.19					Run 3	
10/19/10 14:55:33	79.51	10.26					Run 3	
10/19/10 14:56:33	78.98	10.42					Run 3	
10/19/10 14:57:33	79.44	10.19					Run 3	
10/19/10 14:58:33	78.99	10.31					Run 3	
10/19/10 14:59:33	78.66	10.34					Run 3	
10/19/10 15:00:33	79.31	10.23					Run 3	
10/19/10 15:01:33	80.15	10.35					Run 3	
10/19/10 15:13:33	80.16	10.44					Run 3	
10/19/10 15:14:13	80.25	10.41	80.80	10.33			Run 3	
10/19/10 15:14:33	80.34	10.39					Run 3	
10/19/10 15:15:33	81.14	10.40					Run 3	
10/19/10 15:16:33	80.98	10.33					Run 3	
10/19/10 15:17:33	80.83	10.32					Run 3	
10/19/10 15:18:33	80.01	10.29					Run 3	
10/19/10 15:19:33	79.84	10.36					Run 3	
10/19/10 15:20:33	79.33	10.33					Run 3	
10/19/10 15:21:33	79.82	10.09					Run 3	
10/19/10 15:22:33	79.85	10.31					Run 3	
10/19/10 15:23:33	78.88	10.23					Run 3	
10/19/10 15:24:13	78.87	10.21	80.03	10.30			Run 3	
10/19/10 15:24:33	78.87	10.19					Run 3	
10/19/10 15:25:33	78.69	10.26					Run 3	
10/19/10 15:26:33	79.18	10.27					Run 3	
10/19/10 15:27:33	78.33	10.24					Run 3	
10/19/10 15:28:33	79.02	10.25					Run 3	
10/19/10 15:29:33	78.23	10.30					Run 3	
10/19/10 15:30:33	78.17	10.24					Run 3	
10/19/10 15:31:33	79.36	9.99					Run 3	
10/19/10 15:32:33	80.05	10.27					Run 3	
10/19/10 15:33:33	78.71	10.12					Run 3	
10/19/10 15:34:13	79.44	10.22	78.95	10.21	79.80	10.28	Run 3	
10/19/10 15:34:33	80.17	10.32					Run 3	
10/19/10 15:35:33	77.52	10.55					Run 3	
10/19/10 15:36:33	77.54	10.33					Run 3	
10/19/10 15:37:33	79.23	10.25					Run 3	
10/19/10 15:38:33	79.20	10.28					Run 3	
10/19/10 15:39:33	78.36	10.25					Run 3	
10/19/10 15:40:33	79.69	10.11					Run 3	
10/19/10 15:41:33	81.03	10.07					Run 3	
10/19/10 15:42:33	79.65	10.23			Run 2	Run 2	Run 3	
10/19/10 15:43:33	81.21	9.97			Avg	Avg	Run 3	
10/19/10 15:44:13	81.38	10.02	79.45	10.24	79.58	10.26	End Run 3	
10/19/10 15:44:33	81.55	10.08						
10/19/10 15:45:33	81.90	10.30						
10/19/10 15:46:33	80.22	10.18						
10/19/10 15:47:33	81.69	9.75						
10/19/10 15:48:33	81.72	9.43						
10/19/10 15:49:33	78.54	9.36						
10/19/10 15:50:33	77.70	9.00						
10/19/10 15:51:33	69.04	8.61						
10/19/10 15:52:33	6.21	9.62					SZ	SM
10/19/10 15:53:03	3.56	9.16					1.03	9.62
10/19/10 15:53:33	0.90	8.70						
10/19/10 15:54:33	23.40	-0.41					SM	SZ
10/19/10 15:55:33	47.88	-0.62					47.88	-0.62

APPENDIX C:
F551 OPERATING DATA

	Property	Property Desc	Units	Timestamp	Result
FG	GSP:GROSS_BTU	Ideal gross BTU	BTU	10/18/2010 10:20	1615

HYG203
HYG204

Average (mmscf/d) = 1.64

10/19/2010 12:10
10/19/2010 13:09

1M

Timestamp	HYG203 MSCFD CORRECTED FG F-551 NORTH HYG203 - Average	HYG204 MSCFD CORRECTED FG F-551 SOUTH HYG204 - Average	Total MSCFD
10/19/2010 12:10	0.79	0.74	1.52
10/19/2010 12:11	0.79	0.75	1.54
10/19/2010 12:12	0.80	0.76	1.55
10/19/2010 12:13	0.81	0.76	1.57
10/19/2010 12:14	0.81	0.77	1.58
10/19/2010 12:15	0.81	0.78	1.59
10/19/2010 12:16	0.81	0.78	1.59
10/19/2010 12:17	0.81	0.78	1.59
10/19/2010 12:18	0.80	0.77	1.57
10/19/2010 12:19	0.79	0.77	1.56
10/19/2010 12:20	0.78	0.76	1.55
10/19/2010 12:21	0.78	0.76	1.53
10/19/2010 12:22	0.77	0.75	1.52
10/19/2010 12:23	0.77	0.75	1.52
10/19/2010 12:24	0.77	0.75	1.51
10/19/2010 12:25	0.77	0.74	1.51
10/19/2010 12:26	0.77	0.75	1.51
10/19/2010 12:27	0.77	0.75	1.52
10/19/2010 12:28	0.78	0.75	1.53
10/19/2010 12:29	0.78	0.75	1.54
10/19/2010 12:30	0.79	0.76	1.54
10/19/2010 12:31	0.79	0.76	1.55
10/19/2010 12:32	0.79	0.76	1.56
10/19/2010 12:33	0.80	0.77	1.56
10/19/2010 12:34	0.80	0.77	1.57
10/19/2010 12:35	0.81	0.77	1.58
10/19/2010 12:36	0.81	0.77	1.58
10/19/2010 12:37	0.81	0.78	1.59
10/19/2010 12:38	0.82	0.78	1.60
10/19/2010 12:39	0.82	0.78	1.60
10/19/2010 12:40	0.82	0.79	1.61
10/19/2010 12:41	0.83	0.80	1.63
10/19/2010 12:42	0.84	0.81	1.64
10/19/2010 12:43	0.85	0.81	1.66
10/19/2010 12:44	0.85	0.82	1.67
10/19/2010 12:45	0.86	0.83	1.69
10/19/2010 12:46	0.87	0.84	1.70
10/19/2010 12:47	0.87	0.84	1.72
10/19/2010 12:48	0.88	0.85	1.73
10/19/2010 12:49	0.88	0.85	1.73
10/19/2010 12:50	0.88	0.85	1.74
10/19/2010 12:51	0.89	0.86	1.75
10/19/2010 12:52	0.89	0.86	1.75
10/19/2010 12:53	0.89	0.86	1.75
10/19/2010 12:54	0.89	0.87	1.76
10/19/2010 12:55	0.90	0.87	1.77
10/19/2010 12:56	0.90	0.87	1.77
10/19/2010 12:57	0.90	0.87	1.77
10/19/2010 12:58	0.90	0.87	1.77

10/19/2010 12:59	0.90	0.87	1.77
10/19/2010 13:00	0.89	0.86	1.75
10/19/2010 13:01	0.88	0.86	1.74
10/19/2010 13:02	0.87	0.85	1.73
10/19/2010 13:03	0.87	0.85	1.72
10/19/2010 13:04	0.87	0.84	1.71
10/19/2010 13:05	0.87	0.84	1.71
10/19/2010 13:06	0.87	0.84	1.71
10/19/2010 13:07	0.87	0.85	1.71
10/19/2010 13:08	0.87	0.85	1.71
10/19/2010 13:09	0.87	0.85	1.72

HYG203
HYG204

Average (mmscf/d) = 1.57

10/19/2010 13:20
10/19/2010 14:19

1M

Timestamp	HYG203 MSCFD CORRECTED FG F-551 NORTH HYG203 - Average	HYG204 MSCFD CORRECTED FG F-551 SOUTH HYG204 - Average	Total MSCFD
10/19/2010 13:20	0.84	0.83	1.67
10/19/2010 13:21	0.84	0.82	1.66
10/19/2010 13:22	0.83	0.82	1.65
10/19/2010 13:23	0.83	0.82	1.65
10/19/2010 13:24	0.84	0.82	1.66
10/19/2010 13:25	0.84	0.82	1.66
10/19/2010 13:26	0.84	0.82	1.66
10/19/2010 13:27	0.84	0.82	1.65
10/19/2010 13:28	0.83	0.81	1.64
10/19/2010 13:29	0.83	0.81	1.64
10/19/2010 13:30	0.82	0.80	1.63
10/19/2010 13:31	0.82	0.79	1.61
10/19/2010 13:32	0.82	0.78	1.60
10/19/2010 13:33	0.81	0.78	1.58
10/19/2010 13:34	0.80	0.77	1.56
10/19/2010 13:35	0.79	0.76	1.55
10/19/2010 13:36	0.78	0.75	1.53
10/19/2010 13:37	0.78	0.75	1.53
10/19/2010 13:38	0.78	0.75	1.52
10/19/2010 13:39	0.78	0.74	1.52
10/19/2010 13:40	0.78	0.75	1.53
10/19/2010 13:41	0.79	0.75	1.54
10/19/2010 13:42	0.80	0.76	1.55
10/19/2010 13:43	0.80	0.76	1.56
10/19/2010 13:44	0.80	0.76	1.57
10/19/2010 13:45	0.80	0.77	1.57
10/19/2010 13:46	0.80	0.77	1.57
10/19/2010 13:47	0.80	0.77	1.57
10/19/2010 13:48	0.80	0.77	1.57
10/19/2010 13:49	0.80	0.77	1.57
10/19/2010 13:50	0.80	0.77	1.57
10/19/2010 13:51	0.80	0.76	1.56
10/19/2010 13:52	0.80	0.76	1.56
10/19/2010 13:53	0.79	0.76	1.56
10/19/2010 13:54	0.79	0.76	1.55
10/19/2010 13:55	0.79	0.76	1.55
10/19/2010 13:56	0.79	0.76	1.54
10/19/2010 13:57	0.79	0.76	1.54
10/19/2010 13:58	0.78	0.75	1.54
10/19/2010 13:59	0.78	0.75	1.53
10/19/2010 14:00	0.78	0.75	1.53
10/19/2010 14:01	0.78	0.75	1.53
10/19/2010 14:02	0.78	0.75	1.53
10/19/2010 14:03	0.78	0.75	1.53
10/19/2010 14:04	0.78	0.75	1.53
10/19/2010 14:05	0.79	0.75	1.54
10/19/2010 14:06	0.79	0.75	1.54
10/19/2010 14:07	0.79	0.76	1.55

10/19/2010 14:08	0.79	0.76	1.55
10/19/2010 14:09	0.79	0.75	1.54
10/19/2010 14:10	0.79	0.75	1.54
10/19/2010 14:11	0.79	0.75	1.54
10/19/2010 14:12	0.79	0.76	1.55
10/19/2010 14:13	0.79	0.76	1.56
10/19/2010 14:14	0.80	0.77	1.57
10/19/2010 14:15	0.81	0.78	1.58
10/19/2010 14:16	0.81	0.78	1.58
10/19/2010 14:17	0.81	0.77	1.58
10/19/2010 14:18	0.80	0.77	1.58
10/19/2010 14:19	0.80	0.77	1.57

HYG203
HYG204

Average (mmscf/d) = 1.60

10/19/2010 14:34
10/19/2010 15:33

1M

Timestamp	HYG203 MSCFD CORRECTED FG F-551 NORTH HYG203 - Average	HYG204 MSCFD CORRECTED FG F-551 SOUTH HYG204 - Average	Total MSCFD
10/19/2010 14:34	0.79	0.75	1.54
10/19/2010 14:35	0.78	0.75	1.53
10/19/2010 14:36	0.78	0.74	1.52
10/19/2010 14:37	0.78	0.75	1.53
10/19/2010 14:38	0.79	0.75	1.54
10/19/2010 14:39	0.80	0.76	1.56
10/19/2010 14:40	0.81	0.77	1.58
10/19/2010 14:41	0.82	0.78	1.60
10/19/2010 14:42	0.82	0.79	1.61
10/19/2010 14:43	0.83	0.79	1.62
10/19/2010 14:44	0.83	0.80	1.63
10/19/2010 14:45	0.84	0.80	1.64
10/19/2010 14:46	0.84	0.80	1.64
10/19/2010 14:47	0.84	0.81	1.65
10/19/2010 14:48	0.84	0.81	1.65
10/19/2010 14:49	0.84	0.81	1.65
10/19/2010 14:50	0.84	0.81	1.64
10/19/2010 14:51	0.83	0.80	1.63
10/19/2010 14:52	0.82	0.79	1.62
10/19/2010 14:53	0.82	0.79	1.61
10/19/2010 14:54	0.82	0.78	1.60
10/19/2010 14:55	0.82	0.78	1.60
10/19/2010 14:56	0.82	0.78	1.60
10/19/2010 14:57	0.82	0.78	1.60
10/19/2010 14:58	0.82	0.78	1.60
10/19/2010 14:59	0.81	0.78	1.59
10/19/2010 15:00	0.81	0.78	1.59
10/19/2010 15:01	0.81	0.78	1.59
10/19/2010 15:02	0.82	0.78	1.59
10/19/2010 15:03	0.82	0.78	1.59
10/19/2010 15:04	0.81	0.78	1.59
10/19/2010 15:05	0.81	0.77	1.59
10/19/2010 15:06	0.81	0.77	1.58
10/19/2010 15:07	0.81	0.77	1.58
10/19/2010 15:08	0.81	0.78	1.59
10/19/2010 15:09	0.81	0.78	1.59
10/19/2010 15:10	0.82	0.78	1.60
10/19/2010 15:11	0.81	0.78	1.59
10/19/2010 15:12	0.81	0.78	1.59
10/19/2010 15:13	0.81	0.78	1.59
10/19/2010 15:14	0.81	0.78	1.60
10/19/2010 15:15	0.82	0.79	1.60
10/19/2010 15:16	0.82	0.79	1.61
10/19/2010 15:17	0.82	0.79	1.61
10/19/2010 15:18	0.82	0.79	1.60
10/19/2010 15:19	0.82	0.79	1.61
10/19/2010 15:20	0.82	0.80	1.62
10/19/2010 15:21	0.83	0.80	1.62

10/19/2010 15:22	0.83	0.80	1.63
10/19/2010 15:23	0.82	0.80	1.62
10/19/2010 15:24	0.82	0.80	1.62
10/19/2010 15:25	0.82	0.80	1.62
10/19/2010 15:26	0.82	0.80	1.62
10/19/2010 15:27	0.82	0.80	1.62
10/19/2010 15:28	0.83	0.80	1.63
10/19/2010 15:29	0.82	0.80	1.62
10/19/2010 15:30	0.82	0.80	1.62
10/19/2010 15:31	0.82	0.80	1.62
10/19/2010 15:32	0.82	0.79	1.62
10/19/2010 15:33	0.82	0.79	1.61

APPENDIX D:
B8 TEST DATA

Bison Engineering, Inc.
Method 7E Nitrogen Oxides
Calibration Error, System Bias and System Drift
NOx molecular weight of 46

Company	ExxonMobil	Source	B8 Boiler
Facility	Refinery	Date	Oct 29, 10
Location	Billings		

			Initial Values			Final Values										
		Analyzer Cal. Response	System Cal Response	Pre test System Cal. Bias % of span	pass/fail	System Cal Response	Post test System Cal. Bias % of span	pass/fail	System Drift % of span	pass/fail	Analyzer Span	Avg Gas Conc	Effluent Gas Conc	Conc. O2	Meth 19 Nox lb/hr	Instrument Cal. Reference Gas
Run 1	zero	-0.60	0.35	1.90	pass	0.19	1.58	pass	-0.32	pass						
	upscale	24.35	24.10	-0.49	pass	24.18	-0.33	pass	0.16	pass	50.2	26.43	27.80	3.41	2.877	25.2
Run 2	zero	-0.60	0.19	1.58	pass	0.19	1.58	pass	0.00	pass						
	upscale	24.35	24.18	-0.33	pass	24.17	-0.35	pass	-0.02	pass	50.2	27.14	28.42	3.36	2.929	25.2
Run 3	zero	-0.60	0.19	1.58	pass	-0.09	1.02	pass	-0.56	pass						
	upscale	24.35	24.17	-0.35	pass	23.20	-2.28	pass	-1.93	pass	50.2	27.57	29.44	3.34	3.032	25.2
				> 5%			> 5%		> 3%							

ANALYZER CAL. ERROR	Zero	Low	High
Calibration gas standards	0	25.2	50.2
Cal gas analyzer response	-0.60	24.35	49.34
Analyzer Cal. Error	-1.20	-1.70	-1.71
Analyzer Cal. Error < 2%	pass	pass	pass

	Run 1	Run 2	Run 3	Run 4
60 min	26.43	27.14	27.57	

		Run 1	Run 2	Run 3	Average
NOx Parts Per Milliion, Cd	ppm	27.8	28.4	29.4	28.6
Meth 19, Table 19-1	lbs/scf	3.32E-06	3.39E-06	3.52E-06	3.41E-06
Meth 19, Fd @ 0%O2	dscf/MMBtu	8710	8710	8710	
Oxygen, O2	% O2	3.41	3.36	3.34	3.4
Meth 19, Stack flow	dscf/MMBtu	10406	10377	10365	10382.5
F551 n.g. n.g. usage	kscfh	82.72	82.65	82.67	82.7
F551 n.g. n.g. usage	scf/hr	82725	82648	82672	82681.3
n.g. Btu per scf	Btu/scf	1010	1010	1010	1010.0
F551 heat input	Btu/hr	83551853	83474411	83498221	83508161
F551 heat input	MMBtu/hr	83.55	83.47	83.50	83.5
F551 Stack flow	dscf/hr	869453	866188	865436	867026
NO_2 mass rate	lbs/hr	2.886	2.939	3.042	**2.96**
NO_2 emission factor	lb/MMBtu	0.035	0.035	0.036	**0.035**

1 ppmvd SO2 =	1.6612E-07	lbs/scf
1 ppmvd NOx =	1.1940E-07	lbs/scf
1 ppmvd CO =	7.2678E-08	lbs/scf
1 ppmvd VOC propane =	1.1421E-07	lbs/scf
1 ppmvd VOC carbon =	3.1174E-08	lbs/scf

Bison Engineering, Inc.
Method 10 Carbon Monoxide
Calibration Error, System Bias and System Drift
CO molecular weight of 28

Company	Exxon Mobile	Source	B-8
Facility	Refinery	Date	October 29, 2010
Location	Billings MT		

			Initial Values			Final Values										
		Analyzer Cal. Response	System Cal Response	Pre test System Cal. Bias % of span	pass/fail	System Cal Response	Post test System Cal. Bias % of span	pass/fail	System Drift % of span	pass/fail	Analyzer Span	Avg Gas Conc	Effluent Gas Conc	Conc. O2	Meth 19 CO lb/hr	Instrument Cal. Reference Gas
Run 1	zero	0.00	0.36	0.72	pass	0.36	0.72	pass	0.00	pass						
	upscale	25.36	25.41	0.10	pass	24.40	-1.91	pass	-2.01	pass	50.3	0.36	0.181	3.41	0.011	24.7
Run 2	zero	0.00	0.36	0.72	pass	0.38	0.76	pass	0.04	pass						
	upscale	25.36	24.40	-1.91	pass	24.43	-1.85	pass	0.06	pass	50.3	0.35	0.164	3.36	0.010	24.7
Run 3	zero	0.00	0.38	0.76	pass	0.37	0.74	pass	-0.02	pass						
	upscale	25.36	24.43	-1.85	pass	24.37	-1.97	pass	-0.12	pass	50.3	0.36	0.180	3.34	0.011	24.7
				< 5%			< 5%		< 3%							

ANALYZER CAL. ERROR	Zero	Low	High
Calibration gas standards	0	24.7	50.3
Cal gas analyzer response	0.38	25.36	49.58
Analyzer Cal. Error	0.75	1.31	-1.44
Analyzer Cal. Error < 2%	pass	pass	pass

	Run 1	Run 2	Run 3	Run 4	Run 5
60 MIN	0.36	0.35	0.36		

		Run 1	Run 2	Run 3	Average
CO Parts Per Milliion, Cd	ppm	0.181	0.164	0.180	0.175
CO conversion	lbs/scf	1.32E-08	1.19E-08	1.31E-08	1.27E-08
Meth 19, Fd @ 0%O2	dscf/MMBtu	8710	8710	8710	
Oxygen, O2	% O2	3.41	3.36	3.34	3.4
Meth 19, Stack flow	dscf/MMBtu	10406	10377	10365	10382.5
B8 n.g. n.g. usage	kscfh	82.72	82.65	82.67	82.7
B8 n.g. n.g. usage	scf/hr	82725	82648	82672	82681.3
n.g. Btu per scf	Btu/scf	1010	1010	1010	1010.0
B8 heat input	Btu/hr	83551853	83474411	83498221	83508161
B8 heat input	MMBtu/hr	83.55	83.47	83.50	83.5
B8 Stack flow	dscf/hr	869453	866188	865436	867026
CO mass rate	lbs/hr	0.011	0.010	0.011	**0.011**
CO emission factor	lb/MMBtu	0.00014	0.00012	0.00014	**0.00013**

1 ppmvd SO2 =	1.6612E-07	lbs/scf
1 ppmvd NOx =	1.1940E-07	lbs/scf
1 ppmvd CO =	7.2678E-08	lbs/scf
1 ppmvd VOC propane =	1.1421E-07	lbs/scf
1 ppmvd VOC carbon =	3.1174E-08	lbs/scf

Bison Engineering, Inc.
Method 3A Oxygen
Calibration Error, System Bias and System Drift

Company	ExxonMobil	Source	B8 Boiler
Facility	Refinery	Date	Oct 29, 10
Location	Billings		

			Initial Values			Final Values								
		Analyzer Cal. Response	System Cal Response	Pre test System Cal. Bias % of span	pass/fail	System Cal Response	Post test System Cal. Bias % of span	pass/fail	System Drift % of span	pass/fail	Span gas	Avg Gas Conc	Effluent Gas Conc	Instrument Cal. Reference Gas
Run 1	zero	0.00	0.04	0.19	pass	0.02	0.09	pass	-0.09	pass				
	upscale	9.82	9.80	-0.13	pass	9.87	0.23	pass	0.36	pass	20	3.35	3.41	10
Run 2	zero	0.00	0.02	0.09	pass	-0.02	-0.11	pass	-0.20	pass				
	upscale	9.82	9.87	0.23	pass	9.91	0.43	pass	0.20	pass	20	3.31	3.36	10
Run 3	zero	0.00	-0.02	-0.11	pass	-0.12	-0.61	pass	-0.50	pass				
	upscale	9.82	9.91	0.43	pass	9.85	0.13	pass	-0.30	pass	20	3.26	3.34	10
				> 5%			> 5%		> 3%					

ANALYZER CAL. ERROR	Zero	Low	High
Calibration gas standards	0	10	20
Cal gas analyzer response	0.0	9.8	19.9
Analyzer Cal. Error	0.01	-0.88	-0.31
Analyzer Cal. Error < 2%	pass	pass	pass

	Run 1	Run 2	Run 3	Run 4	Run 5
60 min	3.35	3.31	3.26		

ExxonMobil
Refinery
Billings

B8 Boiler

Date/Time mm/dd/yy hh:mm:ss	NOx RUN ppm	CO RUN ppm	O2 RUN %	CO2 RUN %	NOx Cal ppm	CO Cal ppm	O2 Cal %	CO2 Cal %
10/29/10 06:18:39	3.39	1.40	0.55	0.05				
10/29/10 06:18:49	13.44	1.32	-0.60	0.06				
10/29/10 06:18:59	21.43	1.34	-0.59	0.05				
10/29/10 06:19:09	25.44	1.36	-0.59	0.05				
10/29/10 06:19:19	27.35	1.46	-0.59	0.05				
10/29/10 06:19:29	28.38	1.34	-0.17	0.05				
10/29/10 06:19:39	32.41	1.31	0.58	0.06				
10/29/10 06:19:49	33.36	1.41	0.53	-0.01				
10/29/10 06:19:59	37.41	1.34	0.53	-0.81				
10/29/10 06:20:09	41.45	1.42	0.50	0.16				
10/29/10 06:20:19	43.34	1.34	0.53	0.36				
10/29/10 06:20:29	45.26	1.32	0.53	0.40				
10/29/10 06:20:39	46.39	0.30	0.51	0.42				
10/29/10 06:20:49	47.43	0.42	0.50	0.45				
10/29/10 06:20:59	47.42	0.35	0.51	0.46				
10/29/10 06:21:09	48.37	0.37	0.50	0.49				
10/29/10 06:21:19	48.45	0.37	0.51	2.48	NO converter test			
10/29/10 06:21:29	47.41	0.30	0.50	3.49				
10/29/10 06:21:39	48.44	0.39	4.50	6.49				
10/29/10 06:21:49	37.37	0.40	8.52	8.50				
10/29/10 06:21:59	20.47	0.36	13.41	16.51				
10/29/10 06:22:09	8.43	0.36	17.41	18.10				
10/29/10 06:22:19	2.42	0.44	18.41	20.12				
10/29/10 06:22:29	-0.55	0.36	19.83	20.13				
10/29/10 06:22:39	-0.67	0.40	20.58	20.13				
10/29/10 06:22:49	-0.64	0.37	20.03	20.13				
10/29/10 06:22:59	-0.64	0.42	20.04	20.00				
10/29/10 06:23:09	-0.60	0.33	20.03	19.93				
10/29/10 06:23:19	-0.65	0.42	20.03	19.93				
10/29/10 06:23:29	-0.55	0.34	20.03	19.94				
10/29/10 06:23:39	-0.56	0.31	20.03	19.94	-0.60	0.38	20.03	19.94
10/29/10 06:23:49	-0.51	0.39	35.40	20.11				
10/29/10 06:23:59	-0.56	20.48	0.86	10.15				
10/29/10 06:24:09	-0.61	92.41	0.59	1.50				
10/29/10 06:24:19	239.04	164.54	0.39	0.41				
10/29/10 06:24:29	478.80	231.64	0.35	0.23				
10/29/10 06:24:39	486.70	286.73	0.34	0.14				
10/29/10 06:24:49	493.84	331.69	0.35	0.11				
10/29/10 06:24:59	494.81	367.83	0.34	0.09				
10/29/10 06:25:09	495.81	395.77	0.34	0.08				
10/29/10 06:25:19	495.85	419.80	0.35	0.06				
10/29/10 06:25:29	495.78	434.87	0.33	0.06				
10/29/10 06:25:39	494.84	448.80	0.34	0.06				
10/29/10 06:25:49	494.91	456.88	0.34	0.06				
10/29/10 06:25:59	494.86	457.78	0.33	0.05				
10/29/10 06:26:09	494.84	459.85	0.33	0.04				
10/29/10 06:26:19	494.88	462.79	0.34	0.04				
10/29/10 06:26:29	493.86	460.83	0.34	0.04				
10/29/10 06:26:39	493.85	461.82	0.32	0.04				
10/29/10 06:26:49	493.80	461.85	0.33	0.03				
10/29/10 06:26:59	493.80	463.88	0.33	0.03				
10/29/10 06:27:09	492.83	460.80	0.33	0.04				
10/29/10 06:27:19	492.77	460.84	0.33	0.04				
10/29/10 06:27:29	492.75	463.84	0.31	0.02				
10/29/10 06:27:39	492.81	462.89	0.31	0.04				
10/29/10 06:27:49	492.85	460.78	0.33	0.02				
10/29/10 06:27:59	491.77	461.84	0.33	0.02				
10/29/10 06:28:09	491.78	462.88	0.31	0.03				
10/29/10 06:28:19	491.86	464.82	0.33	0.03				
10/29/10 06:28:29	491.75	461.90	0.33	0.02				
10/29/10 06:28:39	491.84	463.89	0.32	0.02				
10/29/10 06:28:49	491.83	462.82	0.33	0.03				
10/29/10 06:28:59	490.73	460.88	0.33	0.02				
10/29/10 06:29:09	490.86	461.88	0.32	0.02				
10/29/10 06:29:19	490.94	462.84	0.32	0.03				
10/29/10 06:29:29	490.87	460.84	0.32	0.01				
10/29/10 06:29:39	490.86	463.79	0.32	0.02				
10/29/10 06:29:49	490.95	462.87	0.33	0.02				
10/29/10 06:29:59	490.91	460.85	0.32	0.01				
10/29/10 06:30:09	498.79	462.88	0.32	0.02				
10/29/10 06:30:19	498.81	462.86	0.33	0.02				

10/29/10 06:30:29	498.79	462.87	0.32	0.01				
10/29/10 06:30:39	498.81	500.80	0.33	0.03				
10/29/10 06:30:49	498.87	502.84	0.33	0.02				
10/29/10 06:30:59	498.80	499.85	0.32	0.02				
10/29/10 06:31:09	497.83	500.82	0.32	0.02				
10/29/10 06:31:19	498.82	502.90	0.33	0.02				
10/29/10 06:31:29	498.87	499.88	0.32	0.02				
10/29/10 06:31:39	498.81	500.82	0.32	0.02				
10/29/10 06:31:49	497.85	501.84	0.33	0.02				
10/29/10 06:31:59	497.80	502.90	0.32	0.02				
10/29/10 06:32:09	498.88	500.84	0.31	0.02				
10/29/10 06:32:19	497.77	501.83	0.32	0.01				
10/29/10 06:32:29	497.77	501.88	0.32	0.01				
10/29/10 06:32:39	497.87	502.95	0.32	0.01				
10/29/10 06:32:49	497.81	501.95	0.32	0.02				
10/29/10 06:32:59	497.81	499.83	0.32	0.01	498.23	501.54	0.32	0.02
10/29/10 06:33:09	497.86	497.87	0.36	0.02				
10/29/10 06:33:19	495.77	477.88	0.35	0.01				
10/29/10 06:33:29	493.88	424.81	0.36	0.01				
10/29/10 06:33:39	492.84	368.77	0.36	0.02				
10/29/10 06:33:49	491.80	311.77	0.42	0.03				
10/29/10 06:33:59	491.86	259.67	0.59	0.03				
10/29/10 06:34:09	490.88	232.51	0.30	0.05				
10/29/10 06:34:19	478.80	218.61	0.30	0.01				
10/29/10 06:34:29	466.86	215.61	0.29	0.00				
10/29/10 06:34:39	356.02	220.54	0.08	0.01				
10/29/10 06:34:49	245.05	228.59	0.08	0.00				
10/29/10 06:34:59	245.14	238.67	0.05	0.01				
10/29/10 06:35:09	244.11	244.75	0.09	0.02				
10/29/10 06:35:19	245.03	247.68	0.06	0.01				
10/29/10 06:35:29	245.22	248.61	0.05	0.01				
10/29/10 06:35:39	245.17	248.71	0.06	0.01				
10/29/10 06:35:49	245.08	250.66	0.06	0.00				
10/29/10 06:35:59	245.16	250.60	0.07	0.01				
10/29/10 06:36:09	245.10	249.68	0.06	0.01	245.12	250.63	0.06	0.01
10/29/10 06:36:19	245.07	249.62	0.14	0.00				
10/29/10 06:36:29	245.15	241.73	0.15	0.00				
10/29/10 06:36:39	239.09	213.60	0.15	0.01				
10/29/10 06:36:49	234.12	185.59	0.15	0.01				
10/29/10 06:36:59	229.07	155.48	0.17	0.01				
10/29/10 06:37:09	224.16	127.51	0.15	0.02				
10/29/10 06:37:19	205.16	102.49	0.16	0.01				
10/29/10 06:37:29	186.17	83.49	0.17	0.02				
10/29/10 06:37:39	134.26	69.49	0.17	0.02				
10/29/10 06:37:49	81.30	58.36	0.16	0.04				
10/29/10 06:37:59	77.23	49.40	0.19	0.02				
10/29/10 06:38:09	72.32	42.40	0.39	0.05				
10/29/10 06:38:19	68.29	42.41	0.20	0.05				
10/29/10 06:38:29	64.19	40.45	0.07	0.08				
10/29/10 06:38:39	85.29	47.42	0.07	0.03				
10/29/10 06:38:49	105.29	56.40	0.08	0.02				
10/29/10 06:38:59	101.25	67.42	0.06	0.02				
10/29/10 06:39:09	97.37	77.44	0.07	0.00				
10/29/10 06:39:19	97.36	87.43	0.06	0.01				
10/29/10 06:39:29	97.26	94.49	0.06	0.00				
10/29/10 06:39:39	97.24	98.40	0.07	0.02				
10/29/10 06:39:49	97.28	101.38	0.08	0.01				
10/29/10 06:39:59	97.22	102.41	0.06	0.01				
10/29/10 06:40:09	97.28	103.37	0.06	0.01				
10/29/10 06:40:19	97.27	103.45	0.06	0.00				
10/29/10 06:40:29	97.26	102.37	0.06	0.01				
10/29/10 06:40:39	97.27	102.33	0.06	0.01				
10/29/10 06:40:49	97.26	103.43	0.06	0.01				
10/29/10 06:40:59	97.28	102.50	0.06	0.01				
10/29/10 06:41:09	97.22	102.40	0.06	0.01				
10/29/10 06:41:19	97.26	103.41	0.05	0.00				
10/29/10 06:41:29	97.34	103.39	0.07	0.01				
10/29/10 06:41:39	97.20	103.50	0.06	0.00				
10/29/10 06:41:49	97.21	102.44	0.07	0.02				
10/29/10 06:41:59	97.32	103.47	0.06	0.00				
10/29/10 06:42:09	97.25	102.48	0.06	0.00				
10/29/10 06:42:19	97.23	103.40	0.07	0.00				
10/29/10 06:42:29	97.26	103.42	0.07	0.00				
10/29/10 06:42:39	97.19	102.39	0.06	0.00				
10/29/10 06:42:49	97.29	102.43	0.07	0.01				
10/29/10 06:42:59	97.24	103.41	0.06	0.00				

10/29/10 06:43:09	97.31	103.44	0.06	0.00				
10/29/10 06:43:19	97.30	100.37	0.06	0.01				
10/29/10 06:43:29	97.24	100.39	0.06	0.01				
10/29/10 06:43:39	98.33	100.39	0.08	0.00				
10/29/10 06:43:49	98.33	99.47	0.07	0.01				
10/29/10 06:43:59	99.25	99.47	0.06	0.00				
10/29/10 06:44:09	99.25	100.44	0.07	0.00	97.63	101.69	0.07	0.00
10/29/10 06:44:19	99.34	99.47	0.07	0.01				
10/29/10 06:44:29	99.31	99.49	0.06	0.01				
10/29/10 06:44:39	99.29	99.44	0.06	0.01				
10/29/10 06:44:49	99.32	99.43	0.07	0.00				
10/29/10 06:44:59	99.25	100.38	0.07	0.00				
10/29/10 06:45:09	99.29	100.39	0.07	0.00				
10/29/10 06:45:19	99.25	100.46	0.07	0.00				
10/29/10 06:45:29	98.32	100.38	0.06	0.00				
10/29/10 06:45:39	98.26	100.49	0.07	0.00				
10/29/10 06:45:49	98.30	99.38	0.06	0.00				
10/29/10 06:45:59	98.23	100.41	0.06	-0.01				
10/29/10 06:46:09	99.27	100.47	0.07	-0.01				
10/29/10 06:46:19	98.33	100.46	0.06	0.00				
10/29/10 06:46:29	98.25	97.41	0.06	0.01				
10/29/10 06:46:39	98.22	87.35	0.05	0.02				
10/29/10 06:46:49	98.32	76.40	0.07	0.00				
10/29/10 06:46:59	97.35	65.39	0.06	0.01				
10/29/10 06:47:09	97.22	53.38	0.07	0.00				
10/29/10 06:47:19	90.32	44.35	0.08	0.01				
10/29/10 06:47:29	83.33	36.40	0.09	0.01				
10/29/10 06:47:39	54.31	30.46	0.08	0.01				
10/29/10 06:47:49	25.35	25.38	0.08	0.00				
10/29/10 06:47:59	23.33	21.39	0.10	0.01				
10/29/10 06:48:09	21.37	18.38	0.12	0.03				
10/29/10 06:48:19	20.34	21.36	0.05	0.02				
10/29/10 06:48:29	19.36	25.36	0.04	0.01				
10/29/10 06:48:39	34.33	30.33	0.04	0.00				
10/29/10 06:48:49	49.28	35.39	0.04	0.00				
10/29/10 06:48:59	49.32	40.38	0.05	0.00				
10/29/10 06:49:09	49.34	44.35	0.06	0.01				
10/29/10 06:49:19	49.39	47.44	0.05	0.01				
10/29/10 06:49:29	49.36	48.45	0.05	0.00				
10/29/10 06:49:39	49.40	49.40	0.05	0.01				
10/29/10 06:49:49	49.30	49.37	0.05	0.00				
10/29/10 06:49:59	49.37	49.40	0.05	0.01				
10/29/10 06:50:09	49.36	49.31	0.05	0.00				
10/29/10 06:50:19	49.28	50.41	0.04	-0.01				
10/29/10 06:50:29	49.30	49.32	0.05	0.00				
10/29/10 06:50:39	49.31	49.44	0.05	0.00				
10/29/10 06:50:49	49.30	50.47	0.05	0.00				
10/29/10 06:50:59	49.42	49.44	0.05	0.00				
10/29/10 06:51:09	49.36	49.43	0.05	0.00				
10/29/10 06:51:19	49.37	49.37	0.05	0.00				
10/29/10 06:51:29	49.31	49.43	0.06	0.00	49.34	49.58	0.05	0.00
10/29/10 06:51:39	49.37	50.42	0.05	-0.01				
10/29/10 06:51:49	49.30	49.38	0.07	0.00				
10/29/10 06:51:59	49.32	49.46	0.05	0.01				
10/29/10 06:52:09	49.27	45.44	0.06	0.01				
10/29/10 06:52:19	49.34	40.39	0.07	0.01				
10/29/10 06:52:29	48.37	34.40	0.06	0.00				
10/29/10 06:52:39	48.32	29.42	0.05	0.00				
10/29/10 06:52:49	48.30	23.43	0.06	0.00				
10/29/10 06:52:59	36.42	19.40	0.07	0.00				
10/29/10 06:53:09	24.35	16.44	0.07	0.01				
10/29/10 06:53:19	15.34	14.37	0.20	0.00				
10/29/10 06:53:29	7.29	15.47	0.07	0.02				
10/29/10 06:53:39	23.39	17.39	0.06	0.01				
10/29/10 06:53:49	40.26	18.35	0.06	0.01				
10/29/10 06:53:59	32.31	20.44	0.07	0.01				
10/29/10 06:54:09	24.43	22.36	0.07	0.00				
10/29/10 06:54:19	24.29	23.36	0.06	-0.01				
10/29/10 06:54:29	24.39	24.31	0.06	0.00				
10/29/10 06:54:39	24.34	25.38	0.07	0.00				
10/29/10 06:54:49	24.36	25.40	0.07	0.00				
10/29/10 06:54:59	24.29	25.36	0.05	0.00				
10/29/10 06:55:09	24.32	25.33	0.06	0.00				
10/29/10 06:55:19	24.35	25.35	0.06	0.01				
10/29/10 06:55:29	24.32	25.40	0.05	0.01				
10/29/10 06:55:39	24.42	25.32	0.06	0.00				

10/29/10 06:55:49	24.35	25.37	0.06	0.01				
10/29/10 06:55:59	24.37	25.36	0.06	0.00				
10/29/10 06:56:09	24.38	25.42	0.06	0.01				
10/29/10 06:56:19	24.28	25.35	0.07	0.01				
10/29/10 06:56:29	24.36	25.30	0.06	-0.01				
10/29/10 06:56:39	24.40	25.35	0.06	0.00	24.35	25.36	0.06	0.00
10/29/10 06:56:49	24.37	25.37	0.07	0.00				
10/29/10 06:56:59	24.39	24.36	5.44	-0.01				
10/29/10 06:57:09	24.27	22.38	0.75	0.00				
10/29/10 06:57:19	17.33	23.35	0.07	0.08				
10/29/10 06:57:29	10.37	28.36	0.05	0.02				
10/29/10 06:57:39	29.32	32.39	0.06	0.00				
10/29/10 06:57:49	48.33	36.37	0.06	0.00				
10/29/10 06:57:59	49.30	40.40	0.05	0.00				
10/29/10 06:58:09	49.37	44.44	0.06	0.00				
10/29/10 06:58:19	49.38	47.37	0.05	-0.01				
10/29/10 06:58:29	49.36	48.33	0.06	0.01				
10/29/10 06:58:39	49.34	49.40	0.05	0.00				
10/29/10 06:58:49	49.33	49.37	0.04	0.00				
10/29/10 06:58:59	49.33	49.36	0.06	-0.01				
10/29/10 06:59:09	49.35	49.36	0.05	-0.01				
10/29/10 06:59:19	49.35	49.44	0.06	-0.01				
10/29/10 06:59:29	49.30	49.43	0.05	-0.01				
10/29/10 06:59:39	49.35	50.38	0.05	0.00				
10/29/10 06:59:49	49.35	49.39	0.05	0.00				
10/29/10 06:59:59	49.34	49.33	0.06	0.00				
10/29/10 07:00:09	49.34	49.35	0.06	0.00				
10/29/10 07:00:19	49.37	50.47	0.04	0.00				
10/29/10 07:00:29	49.35	49.37	0.05	0.00				
10/29/10 07:00:39	49.28	49.34	0.04	0.00				
10/29/10 07:00:49	49.33	49.47	0.05	0.00				
10/29/10 07:00:59	49.35	50.45	0.05	0.00				
10/29/10 07:01:09	49.31	49.42	0.05	0.01				
10/29/10 07:01:19	49.30	49.49	0.05	0.00				
10/29/10 07:01:29	49.35	49.34	0.04	-0.01	49.33	49.66	0.05	0.00
10/29/10 07:01:39	49.33	49.37	0.05	0.00				
10/29/10 07:01:49	49.29	49.47	0.05	-0.01				
10/29/10 07:01:59	49.33	49.40	4.90	0.01				
10/29/10 07:02:09	49.31	47.36	9.96	0.01				
10/29/10 07:02:19	48.31	40.42	10.00	6.59				
10/29/10 07:02:29	47.38	33.36	10.00	8.67				
10/29/10 07:02:39	24.37	25.40	10.01	9.07				
10/29/10 07:02:49	0.36	18.35	10.00	9.14				
10/29/10 07:02:59	0.40	12.38	10.00	9.78				
10/29/10 07:03:09	0.41	8.32	10.00	9.80				
10/29/10 07:03:19	0.32	5.34	10.00	9.81				
10/29/10 07:03:29	0.38	3.39	9.99	9.81				
10/29/10 07:03:39	0.36	2.24	10.00	9.81				
10/29/10 07:03:49	0.40	1.26	10.00	9.83				
10/29/10 07:03:59	0.37	0.36	10.00	9.82				
10/29/10 07:04:09	0.37	0.39	10.00	9.83				
10/29/10 07:04:19	0.36	0.38	9.98	9.83				
10/29/10 07:04:29	0.32	0.43	9.99	9.82				
10/29/10 07:04:39	0.29	0.35	10.00	9.83				
10/29/10 07:04:49	0.32	0.25	9.99	9.82				
10/29/10 07:04:59	0.36	0.37	10.00	9.83	0.32	0.35	9.99	9.82
10/29/10 07:05:09	0.27	0.32	10.00	9.83				
10/29/10 07:05:19	0.32	0.34	9.10	9.76				
10/29/10 07:05:29	0.33	0.37	19.96	9.80				
10/29/10 07:05:39	0.35	0.39	20.37	3.95				
10/29/10 07:05:49	0.38	0.32	20.33	1.00				
10/29/10 07:05:59	0.40	0.38	20.54	0.34				
10/29/10 07:06:09	0.34	0.40	20.56	0.21				
10/29/10 07:06:19	0.38	1.26	20.56	0.18				
10/29/10 07:06:29	0.39	1.36	20.53	0.15				
10/29/10 07:06:39	0.37	1.45	20.53	0.15				

ExxonMobil
Refinery
Billings

B8 Boiler
Oct 29, 10

Run 1

nm/dd/yy hh:mm:s	NOx 1Min ppm	CO 1M ppm	O2 1M %	CO2 1M %	NOx 60M ppm	CO 60M ppm	O2 60M %	CO2 60M %
10/29/10 08:49:49	26.97	0.38	3.43	10.40				
10/29/10 08:50:49	26.15	0.34	3.42	10.22				
10/29/10 08:51:49	26.13	0.31	3.46	10.27				
10/29/10 08:52:49	26.13	0.55	3.46	10.22				
10/29/10 08:53:49	26.19	0.36	3.50	10.18				
10/29/10 08:54:49	26.14	0.35	3.34	10.26				
10/29/10 08:55:49	26.79	0.39	3.31	10.33				
10/29/10 08:56:49	26.96	0.37	3.37	10.28				
10/29/10 08:57:49	26.62	0.34	3.32	10.30				
10/29/10 08:58:49	26.15	0.70	3.38	10.29				
10/29/10 08:59:49	27.13	0.32	3.32	10.30				
10/29/10 09:00:49	26.15	0.33	3.40	10.25				
10/29/10 09:01:49	26.31	0.36	3.46	10.23				
10/29/10 09:02:49	26.45	0.32	3.35	10.31				
10/29/10 09:03:49	26.84	0.33	3.31	10.31				
10/29/10 09:04:49	27.15	0.36	3.17	10.39				
10/29/10 09:05:49	27.13	0.37	3.27	10.34				
10/29/10 09:06:49	27.12	0.35	3.36	10.32				
10/29/10 09:07:49	26.29	0.31	3.34	10.22				
10/29/10 09:08:49	26.98	0.33	3.35	10.30				
10/29/10 09:09:49	26.30	0.34	3.51	10.19				
10/29/10 09:10:49	26.49	0.32	3.35	10.24				
10/29/10 09:11:49	26.97	0.34	3.35	10.29				
10/29/10 09:12:49	26.35	0.40	3.32	10.20				
10/29/10 09:13:49	26.79	0.34	3.20	10.35				
10/29/10 09:14:49	27.18	0.51	3.31	10.31				
10/29/10 09:15:49	26.31	0.32	3.30	10.30				
10/29/10 09:16:49	26.13	0.35	3.35	10.27				
10/29/10 09:17:49	26.13	0.31	3.43	10.20				
10/29/10 09:18:49	26.12	0.33	3.39	10.22				
10/29/10 09:19:49	26.50	0.38	3.16	10.37				
10/29/10 09:20:49	27.15	0.50	3.12	10.40				
10/29/10 09:21:49	27.15	0.35	3.24	10.35				
10/29/10 09:22:49	26.82	0.35	3.34	10.30				
10/29/10 09:23:49	26.33	0.33	3.26	10.30				
10/29/10 09:24:49	26.15	0.36	3.43	10.25				
10/29/10 09:25:49	26.14	0.35	3.41	10.20				
10/29/10 09:26:49	26.17	0.35	3.40	10.27				
10/29/10 09:27:49	26.17	0.36	3.35	10.26				
10/29/10 09:28:49	26.14	0.34	3.49	10.21				
10/29/10 09:29:49	26.16	0.35	3.33	10.24				
10/29/10 09:30:49	26.17	0.35	3.36	10.27				
10/29/10 09:31:49	26.17	0.33	3.40	10.23				
10/29/10 09:32:49	26.15	0.34	3.31	10.28				
10/29/10 09:33:49	26.29	0.33	3.33	10.30				
10/29/10 09:34:49	26.19	0.34	3.43	10.20				
10/29/10 09:35:49	26.17	0.33	3.28	10.32				
10/29/10 09:36:49	26.32	0.34	3.35	10.26				
10/29/10 09:37:49	26.17	0.34	3.24	10.26				
10/29/10 09:38:49	26.65	0.35	3.37	10.24				
10/29/10 09:39:49	26.18	0.34	3.40	10.20				
10/29/10 09:40:49	26.13	0.35	3.31	10.20				
10/29/10 09:41:49	26.16	0.36	3.34	10.27				
10/29/10 09:42:49	26.14	0.36	3.33	10.18				
10/29/10 09:43:49	26.12	0.38	3.40	10.20				
10/29/10 09:44:49	26.18	0.33	3.26	10.22				
10/29/10 09:45:49	26.50	0.32	3.31	10.26				
10/29/10 09:46:49	26.31	0.36	3.51	10.12				
10/29/10 09:47:49	26.16	0.35	3.45	10.13				
10/29/10 09:48:49	26.36	0.33	3.26	10.24	26.43	0.36	3.35	10.26

ExxonMobil
Refinery
Billings

B8 Boiler
Oct 29, 10

Post test Run 1 System audits

Date/Time mm/dd/yy hh:mm:s	NOx RUN ppm	CO RUN ppm	O2 RUN %	CO2 RUN %	NOx Cal ppm	CO Cal ppm	O2 Cal %	CO2 Cal %
10/29/10 09:48:59	26.19	0.30	3.39	10.23				
10/29/10 09:49:09	26.07	0.33	2.65	10.23				
10/29/10 09:49:19	26.17	2.35	0.63	8.01				
10/29/10 09:49:29	26.18	5.32	0.15	3.19				
10/29/10 09:49:39	25.10	9.39	0.06	0.96				
10/29/10 09:49:49	23.16	12.33	0.04	0.38				
10/29/10 09:49:59	23.21	15.43	0.04	0.19				
10/29/10 09:50:09	23.19	18.35	0.03	0.13				
10/29/10 09:50:19	23.20	20.30	0.04	0.10				
10/29/10 09:50:29	23.25	22.38	0.02	0.10				
10/29/10 09:50:39	23.15	23.34	0.02	0.08				
10/29/10 09:50:49	23.10	24.40	0.03	0.07				
10/29/10 09:50:59	23.21	24.27	0.04	0.08				
10/29/10 09:51:09	24.14	24.30	0.03	0.07				
10/29/10 09:51:19	24.08	24.32	0.03	0.06				
10/29/10 09:51:29	24.01	24.36	0.03	0.07				
10/29/10 09:51:39	24.18	24.36	0.01	0.04				
10/29/10 09:51:49	24.22	24.42	0.03	0.05				
10/29/10 09:51:59	24.12	24.41	0.02	0.05				
10/29/10 09:52:09	24.21	24.44	0.02	0.05				
10/29/10 09:52:19	24.15	24.36	0.03	0.04				
10/29/10 09:52:29	24.10	24.42	0.02	0.05	24.18	24.40	0.02	0.05
10/29/10 09:52:39	23.23	24.38	0.03	0.05				
10/29/10 09:52:49	23.15	24.36	0.17	0.05				
10/29/10 09:52:59	23.19	24.35	2.69	0.07				
10/29/10 09:53:09	23.21	21.34	8.06	4.69				
10/29/10 09:53:19	23.11	18.43	9.45	7.24				
10/29/10 09:53:29	23.10	14.33	9.73	8.99				
10/29/10 09:53:39	15.21	10.31	9.80	9.53				
10/29/10 09:53:49	7.23	7.39	9.81	9.68				
10/29/10 09:53:59	4.22	5.43	9.84	9.72				
10/29/10 09:54:09	1.13	3.28	9.84	9.74				
10/29/10 09:54:19	0.12	2.33	9.85	9.76				
10/29/10 09:54:29	0.20	1.26	9.85	9.76				
10/29/10 09:54:39	0.18	1.37	9.85	9.78				
10/29/10 09:54:49	0.22	0.38	9.86	9.76				
10/29/10 09:54:59	0.17	0.32	9.87	9.77				
10/29/10 09:55:09	0.20	0.39	9.86	9.77				
10/29/10 09:55:19	0.19	0.31	9.86	9.78				
10/29/10 09:55:29	0.23	0.38	9.87	9.79				
10/29/10 09:55:39	0.18	0.33	9.87	9.78				
10/29/10 09:55:49	0.15	0.43	9.87	9.79				
10/29/10 09:55:59	0.16	0.41	9.86	9.79	0.19	0.36	9.87	9.78
10/29/10 09:56:09	0.08	0.40	9.85	9.78				
10/29/10 09:56:19	0.07	0.28	5.62	9.79				

ExxonMobil
Refinery
Billings

B8 Boiler
Oct 29, 10

Run 2

Date/Time mm/dd/yy hh:mm:s	NOx 1Min ppm	CO 1M ppm	O2 1M %	CO2 1M %	NOx 60M ppm	CO 60M ppm	O2 60M %	CO2 60M %
10/29/10 09:58:49	27.18	0.37	3.40	10.16				
10/29/10 09:59:49	27.66	0.34	3.24	10.26				
10/29/10 10:00:49	27.68	0.36	3.30	10.23				
10/29/10 10:01:49	27.17	0.34	3.40	10.12				
10/29/10 10:02:49	27.35	0.37	3.30	10.23				
10/29/10 10:03:49	27.15	0.36	3.36	10.15				
10/29/10 10:04:49	27.17	0.37	3.24	10.22				
10/29/10 10:05:49	27.09	0.32	3.40	10.19				
10/29/10 10:06:49	26.99	0.29	3.35	10.22				
10/29/10 10:07:49	27.12	0.36	3.36	10.18				
10/29/10 10:08:49	27.13	0.35	3.37	10.21				
10/29/10 10:09:49	27.17	0.33	3.30	10.22				
10/29/10 10:10:49	27.16	0.33	3.11	10.34				
10/29/10 10:11:49	27.17	0.35	3.20	10.34				
10/29/10 10:12:49	27.15	0.33	3.34	10.23				
10/29/10 10:13:49	27.14	0.34	3.16	10.27				
10/29/10 10:14:49	27.81	0.35	3.26	10.30				
10/29/10 10:15:49	27.19	0.36	3.37	10.21				
10/29/10 10:16:49	27.15	0.36	3.38	10.19				
10/29/10 10:17:49	27.14	0.36	3.45	10.16				
10/29/10 10:18:49	27.17	0.33	3.34	10.18				
10/29/10 10:19:49	27.14	0.36	3.36	10.22				
10/29/10 10:20:49	27.19	0.38	3.34	10.19				
10/29/10 10:21:49	27.17	0.38	3.31	10.21				
10/29/10 10:22:49	27.35	0.35	3.25	10.31				
10/29/10 10:23:49	27.18	0.34	3.34	10.19				
10/29/10 10:24:49	27.19	0.36	3.29	10.25				
10/29/10 10:25:49	27.13	0.36	3.36	10.23				
10/29/10 10:26:49	27.21	0.36	3.37	10.20				
10/29/10 10:27:49	27.16	0.33	3.32	10.22				
10/29/10 10:28:49	27.14	0.32	3.27	10.24				
10/29/10 10:29:49	27.17	0.35	3.34	10.24				
10/29/10 10:30:49	27.17	0.38	3.43	10.17				
10/29/10 10:31:49	26.92	0.37	3.36	10.17				
10/29/10 10:32:49	27.17	0.38	3.33	10.23				
10/29/10 10:33:49	26.83	0.36	3.37	10.18				
10/29/10 10:34:49	27.17	0.33	3.32	10.24				
10/29/10 10:35:49	27.15	0.34	3.32	10.23				
10/29/10 10:36:49	26.99	0.40	3.36	10.18				
10/29/10 10:37:49	27.14	0.33	3.20	10.27				
10/29/10 10:38:49	27.02	0.36	3.40	10.21				
10/29/10 10:39:49	27.15	0.34	3.25	10.23				
10/29/10 10:40:49	26.85	0.33	3.34	10.21				
10/29/10 10:41:49	27.17	0.33	3.38	10.20				
10/29/10 10:42:49	27.02	0.36	3.30	10.19				
10/29/10 10:43:49	27.17	0.35	3.27	10.26				
10/29/10 10:44:49	27.16	0.36	3.23	10.28				
10/29/10 10:45:49	26.69	0.34	3.33	10.20				
10/29/10 10:46:49	27.14	0.37	3.21	10.28				
10/29/10 10:47:49	27.18	0.36	3.32	10.23				
10/29/10 10:48:49	27.19	0.37	3.21	10.25				
10/29/10 10:49:49	27.17	0.32	3.32	10.26				
10/29/10 10:50:49	26.67	0.35	3.27	10.21				
10/29/10 10:51:49	27.17	0.34	3.31	10.23				
10/29/10 10:52:49	27.21	0.37	3.28	10.22				
10/29/10 10:53:49	27.17	0.32	3.34	10.21				
10/29/10 10:54:49	27.01	0.33	3.30	10.22				
10/29/10 10:55:49	26.84	0.39	3.29	10.21				
10/29/10 10:56:49	27.15	0.31	3.27	10.26				
10/29/10 10:57:49	26.83	0.39	3.23	10.24	27.14	0.35	3.31	10.22

ExxonMobil
Refinery
Billings

B8 Boiler
Oct 29, 10

Post test Run 2 System audits

Date/Time mm/dd/yy hh:mm:s	NOx RUN ppm	CO RUN ppm	O2 RUN %	CO2 RUN %	NOx Cal ppm	CO Cal ppm	O2 Cal %	CO2 Cal %
10/29/10 10:56:59	27.24	0.43	3.19	10.21				
10/29/10 10:57:09	27.12	0.31	3.25	10.25				
10/29/10 10:57:19	26.25	0.42	3.29	10.26				
10/29/10 10:57:29	26.15	0.38	3.24	10.24				
10/29/10 10:57:39	27.11	0.48	3.29	10.27				
10/29/10 10:57:49	27.14	0.33	3.13	10.23				
10/29/10 10:57:59	26.19	0.40	3.13	10.30				
10/29/10 10:58:09	27.23	0.44	2.24	10.34				
10/29/10 10:58:19	27.13	1.33	0.44	7.44				
10/29/10 10:58:29	26.16	4.27	0.07	2.90				
10/29/10 10:58:39	24.04	8.40	-0.01	0.86				
10/29/10 10:58:49	24.22	11.39	-0.02	0.34				
10/29/10 10:58:59	24.12	15.33	-0.03	0.17				
10/29/10 10:59:09	24.20	17.40	-0.02	0.11				
10/29/10 10:59:19	24.23	20.36	-0.01	0.10				
10/29/10 10:59:29	24.20	21.39	-0.02	0.09				
10/29/10 10:59:39	24.16	23.46	-0.02	0.08				
10/29/10 10:59:49	23.24	23.44	-0.02	0.08				
10/29/10 10:59:59	23.28	24.34	-0.01	0.07				
10/29/10 11:00:09	23.20	24.39	-0.03	0.08				
10/29/10 11:00:19	23.27	24.40	-0.03	0.07				
10/29/10 11:00:29	25.12	24.35	-0.03	0.06				
10/29/10 11:00:39	25.15	24.31	-0.03	0.06				
10/29/10 11:00:49	25.16	24.39	-0.03	0.05				
10/29/10 11:00:59	24.11	24.31	-0.03	0.05				
10/29/10 11:01:09	24.25	24.38	-0.02	0.06				
10/29/10 11:01:19	24.22	24.39	-0.03	0.04				
10/29/10 11:01:29	24.15	24.46	-0.02	0.04				
10/29/10 11:01:39	24.13	24.43	-0.02	0.04				
10/29/10 11:01:49	24.13	24.27	-0.03	0.04	24.17	24.43	-0.02	0.04
10/29/10 11:01:59	23.24	24.37	0.96	0.06				
10/29/10 11:02:09	23.19	24.40	7.88	0.13				
10/29/10 11:02:19	23.21	22.44	9.56	5.20				
10/29/10 11:02:29	16.20	18.38	9.88	8.09				
10/29/10 11:02:39	8.10	14.34	9.95	9.30				
10/29/10 11:02:49	4.26	11.35	9.97	9.61				
10/29/10 11:02:59	1.17	8.39	9.97	9.71				
10/29/10 11:03:09	0.14	5.43	9.97	9.74				
10/29/10 11:03:19	0.19	4.32	9.98	9.76				
10/29/10 11:03:29	0.22	2.29	9.98	9.75				
10/29/10 11:03:39	0.07	1.39	9.98	9.77				
10/29/10 11:03:49	0.15	1.40	9.99	9.77				
10/29/10 11:03:59	0.15	0.34	9.99	9.77				
10/29/10 11:04:09	0.14	0.33	9.98	9.78				
10/29/10 11:04:19	0.19	0.35	9.98	9.77				
10/29/10 11:04:29	0.14	0.30	9.98	9.78				
10/29/10 11:04:39	0.24	0.43	9.97	9.77				
10/29/10 11:04:49	0.14	0.35	9.77	9.76				
10/29/10 11:04:59	0.26	0.46	9.87	9.76				
10/29/10 11:05:09	0.19	0.41	9.95	9.77	0.19	0.38	9.91	9.77
10/29/10 11:05:19	0.18	0.27	9.95	9.79				
10/29/10 11:05:29	0.16	0.40	8.32	9.78				

ExxonMobil
Refinery
Billings

B8 Boiler
Oct 29, 10

Run 3

Date/Time mm/dd/yy hh:mm:ss	NOx 1Min ppm	CO 1M ppm	O2 1M %	CO2 1M %	NOx 60M ppm	CO 60M ppm	O2 60M %	CO2 60M %
10/29/10 11:09:29	27.70	0.36	3.29	10.24				
10/29/10 11:10:29	27.16	0.39	3.38	10.14				
10/29/10 11:11:29	27.84	0.36	3.23	10.23				
10/29/10 11:12:29	27.22	0.40	3.29	10.20				
10/29/10 11:13:29	27.53	0.37	3.22	10.22				
10/29/10 11:14:29	28.05	0.38	3.28	10.23				
10/29/10 11:15:29	28.19	0.34	3.13	10.31				
10/29/10 11:16:29	28.14	0.35	3.20	10.30				
10/29/10 11:17:29	28.20	0.36	3.32	10.24				
10/29/10 11:18:29	27.21	0.35	3.34	10.16				
10/29/10 11:19:29	27.55	0.33	3.33	10.19				
10/29/10 11:20:29	27.85	0.35	3.24	10.25				
10/29/10 11:21:29	27.13	0.40	3.37	10.20				
10/29/10 11:22:29	27.19	0.38	3.44	10.12				
10/29/10 11:23:29	27.16	0.36	3.39	10.15				
10/29/10 11:24:29	27.17	0.39	3.27	10.21				
10/29/10 11:25:29	28.16	0.39	3.17	10.29				
10/29/10 11:26:29	27.99	0.34	3.23	10.30				
10/29/10 11:27:29	27.33	0.36	3.30	10.21				
10/29/10 11:28:29	28.01	0.34	3.23	10.28				
10/29/10 11:29:29	27.67	0.37	3.18	10.28				
10/29/10 11:30:29	28.19	0.39	3.22	10.28				
10/29/10 11:31:29	28.15	0.35	3.24	10.25				
10/29/10 11:32:29	27.37	0.34	3.32	10.21				
10/29/10 11:33:29	27.19	0.39	3.38	10.16				
10/29/10 11:34:29	27.20	0.36	3.28	10.17				
10/29/10 11:35:29	27.71	0.40	3.24	10.24				
10/29/10 11:36:29	27.20	0.37	3.29	10.22				
10/29/10 11:37:29	27.34	0.34	3.24	10.21				
10/29/10 11:38:29	28.02	0.32	3.13	10.28				
10/29/10 11:39:29	28.19	0.35	3.15	10.32				
10/29/10 11:40:29	27.53	0.37	3.31	10.22				
10/29/10 11:41:29	27.14	0.38	3.27	10.17				
10/29/10 11:42:29	27.33	0.35	3.24	10.26				
10/29/10 11:43:29	28.02	0.34	3.19	10.24				
10/29/10 11:44:29	27.85	0.39	3.13	10.31				
10/29/10 11:45:29	28.03	0.35	3.23	10.25				
10/29/10 11:46:29	27.16	0.35	3.24	10.22				
10/29/10 11:47:29	27.21	0.37	3.34	10.19				
10/29/10 11:48:29	27.20	0.36	3.28	10.20				
10/29/10 11:49:29	27.24	0.40	3.44	10.12				
10/29/10 11:50:29	27.17	0.36	3.38	10.12				
10/29/10 11:51:29	27.20	0.40	3.29	10.19				
10/29/10 11:52:29	27.20	0.40	3.33	10.16				
10/29/10 11:53:29	27.19	0.35	3.24	10.19				
10/29/10 11:54:29	27.21	0.36	3.28	10.23				
10/29/10 11:55:29	27.53	0.39	3.18	10.24				
10/29/10 11:56:29	27.69	0.35	3.16	10.27				
10/29/10 11:57:29	28.00	0.37	3.16	10.28				
10/29/10 11:58:29	28.03	0.34	3.20	10.25				
10/29/10 11:59:29	27.20	0.37	3.37	10.18				
10/29/10 12:00:29	27.22	0.37	3.33	10.13				
10/29/10 12:01:29	27.19	0.35	3.36	10.15				
10/29/10 12:02:29	27.23	0.35	3.32	10.14				
10/29/10 12:03:29	27.18	0.38	3.21	10.21				
10/29/10 12:04:29	27.87	0.35	3.27	10.20				

10/29/10 12:05:29	27.55	0.35	3.08	10.25				
10/29/10 12:06:29	28.18	0.34	3.05	10.34				
10/29/10 12:07:29	28.19	0.38	3.16	10.26				
10/29/10 12:08:29	27.21	0.37	3.40	10.13	27.57	0.36	3.26	10.22
10/29/10 12:09:29	27.54	0.35	3.22	10.20				
10/29/10 12:10:29	27.03	2.39	1.37	6.51				
10/29/10 12:11:29	24.18	17.75	-0.11	0.13				
10/29/10 12:12:29	24.05	24.24	-0.11	0.06				
10/29/10 12:13:29	23.23	24.38	0.35	0.04				
10/29/10 12:14:29	14.60	17.25	18.87	14.92				
10/29/10 12:15:29	0.20	3.53	19.76	21.11				
10/29/10 12:16:29	0.17	0.35	19.15	21.17				
10/29/10 12:17:29	0.24	0.37	10.11	12.35				
10/29/10 12:18:29	-0.26	0.38	9.85	9.81				

ExxonMobil
Refinery
Billings

B8 Boiler
Oct 29, 10

Post test Run 3 System audits

Date/Time mm/dd/yy hh:mm:s	NOx RUN ppm	CO RUN ppm	O2 RUN %	CO2 RUN %	NOx Cal ppm	CO Cal ppm	O2 Cal %	CO2 Cal %
10/29/10 12:04:49	27.20	0.21	3.14	10.19				
10/29/10 12:04:59	27.13	0.38	3.12	10.25				
10/29/10 12:05:09	27.28	0.39	3.04	10.25				
10/29/10 12:05:19	28.28	0.36	3.00	10.32				
10/29/10 12:05:29	28.17	0.38	2.98	10.34				
10/29/10 12:05:39	28.17	0.38	2.99	10.36				
10/29/10 12:05:49	28.19	0.35	3.05	10.36				
10/29/10 12:05:59	28.18	0.28	2.99	10.33				
10/29/10 12:06:09	28.13	0.32	3.12	10.35				
10/29/10 12:06:19	28.27	0.34	3.08	10.32				
10/29/10 12:06:29	28.12	0.38	3.04	10.29				
10/29/10 12:06:39	28.20	0.38	3.06	10.30				
10/29/10 12:06:49	28.20	0.43	3.19	10.31				
10/29/10 12:06:59	28.12	0.42	3.24	10.26				
10/29/10 12:07:09	28.25	0.32	3.16	10.23				
10/29/10 12:07:19	28.22	0.36	3.10	10.23				
10/29/10 12:07:29	28.14	0.38	3.22	10.26				
10/29/10 12:07:39	27.18	0.37	3.37	10.26				
10/29/10 12:07:49	27.13	0.32	3.45	10.16				
10/29/10 12:07:59	27.29	0.39	3.37	10.09				
10/29/10 12:08:09	27.32	0.39	3.41	10.09				
10/29/10 12:08:19	27.20	0.38	3.41	10.09				
10/29/10 12:08:29	27.18	0.37	3.38	10.07				
10/29/10 12:08:39	27.30	0.37	3.20	10.08				
10/29/10 12:08:49	27.22	0.39	3.08	10.18				
10/29/10 12:08:59	27.22	0.27	3.15	10.25				
10/29/10 12:09:09	27.16	0.32	3.17	10.28				
10/29/10 12:09:19	28.17	0.35	3.29	10.24				
10/29/10 12:09:29	28.15	0.42	3.39	10.20				
10/29/10 12:09:39	27.09	0.41	3.33	10.13				
10/29/10 12:09:49	27.20	0.42	3.42	10.13				
10/29/10 12:09:59	27.29	0.44	1.42	10.14				
10/29/10 12:10:09	27.16	1.35	0.19	5.82				
10/29/10 12:10:19	27.32	4.32	-0.05	2.17				
10/29/10 12:10:29	26.12	7.40	-0.09	0.68				
10/29/10 12:10:39	24.13	11.43	-0.10	0.28				
10/29/10 12:10:49	24.17	14.46	-0.10	0.15				
10/29/10 12:10:59	24.18	17.40	-0.11	0.11				
10/29/10 12:11:09	24.18	19.37	-0.11	0.09				
10/29/10 12:11:19	24.16	21.40	-0.11	0.09				
10/29/10 12:11:29	24.25	22.45	-0.12	0.08				
10/29/10 12:11:39	24.26	23.43	-0.12	0.07				
10/29/10 12:11:49	24.19	24.43	-0.10	0.06				
10/29/10 12:11:59	24.21	24.45	-0.11	0.05				
10/29/10 12:12:09	24.24	24.33	-0.11	0.06				
10/29/10 12:12:19	24.21	24.40	-0.12	0.04				
10/29/10 12:12:29	23.21	24.37	-0.12	0.06				
10/29/10 12:12:39	23.16	24.33	-0.11	0.04				
10/29/10 12:12:49	23.17	24.40	-0.12	0.04				
10/29/10 12:12:59	23.25	24.38	-0.12	0.04				
10/29/10 12:13:19	23.26	24.39	-0.12	0.03				
10/29/10 12:13:29	23.28	24.38	2.72	0.04				
10/29/10 12:13:39	23.24	24.49	15.64	0.22				
10/29/10 12:13:49	22.31	22.34	18.89	10.53				
10/29/10 12:13:59	22.22	19.48	19.54	17.23				
10/29/10 12:14:09	13.31	15.48	19.69	19.86				
10/29/10 12:14:19	4.25	12.38	19.73	20.71				

10/29/10 12:14:29	2.27	9.31	19.74	20.96
10/29/10 12:14:39	0.23	7.38	19.76	21.03
10/29/10 12:14:49	0.22	5.46	19.76	21.09
10/29/10 12:14:59	0.17	3.31	19.75	21.10
10/29/10 12:15:09	0.18	2.40	19.77	21.12
10/29/10 12:15:19	0.22	1.33	19.77	21.15
10/29/10 12:15:29	0.17	1.32	19.77	21.15
10/29/10 12:15:39	0.23	0.42	19.79	21.15
10/29/10 12:15:49	0.22	0.37	19.79	21.16
10/29/10 12:15:59	0.21	0.38	19.78	21.16
10/29/10 12:16:09	0.06	0.28	19.77	21.18
10/29/10 12:16:19	0.16	0.35	19.79	21.18
10/29/10 12:16:29	0.12	0.31	16.01	21.19
10/29/10 12:16:39	0.22	0.36	11.09	19.44
10/29/10 12:16:49	0.24	0.48	10.10	13.59
10/29/10 12:16:59	0.23	0.44	9.91	11.05
10/29/10 12:17:09	0.26	0.19	9.86	10.20
10/29/10 12:17:19	0.24	0.44	9.86	9.96
10/29/10 12:17:29	0.23	0.33	9.85	9.87
10/29/10 12:17:39	0.28	0.30	9.85	9.82
10/29/10 12:17:49	0.29	0.47	9.85	9.82
10/29/10 12:17:59	0.26	0.49	9.85	9.82
10/29/10 12:18:09	-0.79	0.29	9.86	9.81
10/29/10 12:18:19	-0.82	0.34	9.86	9.79
10/29/10 12:18:39	-0.87	0.33	7.60	9.80
10/29/10 12:18:49	-0.81	0.39	4.09	9.85

APPENDIX E:
B8 OPERATING DATA

ABF801X2 Average (kscfh) = 82.72

10/29/2010 8:49
10/29/2010 9:48

1M

Timestamp	ABF801X2 KSCFH REFINERY GAS FLOW ABF801X2 - Average
10/29/2010 8:49	81.87630463
10/29/2010 8:50	82.37960898
10/29/2010 8:51	82.77970136
10/29/2010 8:52	81.21342201
10/29/2010 8:53	82.6985733
10/29/2010 8:54	82.59039701
10/29/2010 8:55	82.28252392
10/29/2010 8:56	83.91303457
10/29/2010 8:57	83.13437227
10/29/2010 8:58	83.8512935
10/29/2010 8:59	83.36717326
10/29/2010 9:00	82.20108674
10/29/2010 9:01	83.53076134
10/29/2010 9:02	83.42419535
10/29/2010 9:03	83.28640836
10/29/2010 9:04	82.63213278
10/29/2010 9:05	82.40189686
10/29/2010 9:06	82.21592598
10/29/2010 9:07	83.32683328
10/29/2010 9:08	82.8223259
10/29/2010 9:09	82.42821808
10/29/2010 9:10	83.59907633
10/29/2010 9:11	82.83582026
10/29/2010 9:12	83.30249284
10/29/2010 9:13	82.40332896
10/29/2010 9:14	83.62347991
10/29/2010 9:15	83.19961815
10/29/2010 9:16	81.68126405
10/29/2010 9:17	82.24552809
10/29/2010 9:18	83.02600403
10/29/2010 9:19	82.69350306
10/29/2010 9:20	82.44381771
10/29/2010 9:21	82.46542791
10/29/2010 9:22	83.11885096
10/29/2010 9:23	83.52462489
10/29/2010 9:24	82.95465037
10/29/2010 9:25	82.26056054
10/29/2010 9:26	82.15606391
10/29/2010 9:27	81.61893648
10/29/2010 9:28	82.22256546
10/29/2010 9:29	82.36536961
10/29/2010 9:30	82.82447796
10/29/2010 9:31	83.46423664
10/29/2010 9:32	83.03577474
10/29/2010 9:33	81.87602425
10/29/2010 9:34	82.92352174
10/29/2010 9:35	82.21476593
10/29/2010 9:36	82.60250676
10/29/2010 9:37	82.75130761
10/29/2010 9:38	82.16162275

10/29/2010 9:39	83.5393603
10/29/2010 9:40	82.76921126
10/29/2010 9:41	83.15406113
10/29/2010 9:42	82.6889883
10/29/2010 9:43	83.2831529
10/29/2010 9:44	82.43620911
10/29/2010 9:45	82.58208586
10/29/2010 9:46	82.36545436
10/29/2010 9:47	82.30060749
10/29/2010 9:48	82.40585461

ABF801X2 Average (kscfh) = 82.65

10/29/2010 9:58
10/29/2010 10:57

1M

Timestamp	ABF801X2 KSCFH REFINERY GAS FLOW ABF801X2 - Average
10/29/2010 9:58	82.98925425
10/29/2010 9:59	82.64783866
10/29/2010 10:00	82.24549166
10/29/2010 10:01	82.03309587
10/29/2010 10:02	83.10813007
10/29/2010 10:03	81.71778406
10/29/2010 10:04	83.17672914
10/29/2010 10:05	82.31090101
10/29/2010 10:06	81.85855287
10/29/2010 10:07	82.45427469
10/29/2010 10:08	83.33334586
10/29/2010 10:09	82.6302845
10/29/2010 10:10	83.26986319
10/29/2010 10:11	82.75421797
10/29/2010 10:12	82.35544039
10/29/2010 10:13	82.54079666
10/29/2010 10:14	82.75939077
10/29/2010 10:15	83.19126631
10/29/2010 10:16	82.24569537
10/29/2010 10:17	82.92051449
10/29/2010 10:18	82.29875418
10/29/2010 10:19	82.25788148
10/29/2010 10:20	81.84299291
10/29/2010 10:21	83.92941259
10/29/2010 10:22	82.78301366
10/29/2010 10:23	82.40014362
10/29/2010 10:24	82.62117227
10/29/2010 10:25	82.43549658
10/29/2010 10:26	82.7398922
10/29/2010 10:27	82.83896211
10/29/2010 10:28	82.38371919
10/29/2010 10:29	82.14003658
10/29/2010 10:30	82.12445577
10/29/2010 10:31	82.68242207
10/29/2010 10:32	82.38104846
10/29/2010 10:33	82.58441264
10/29/2010 10:34	82.87276001
10/29/2010 10:35	83.28666
10/29/2010 10:36	82.93401794
10/29/2010 10:37	82.89288673
10/29/2010 10:38	82.65621223
10/29/2010 10:39	82.83752047
10/29/2010 10:40	82.18424187
10/29/2010 10:41	82.04442132
10/29/2010 10:42	83.26811218
10/29/2010 10:43	83.13387642
10/29/2010 10:44	82.4262296
10/29/2010 10:45	82.77144133
10/29/2010 10:46	82.96856791
10/29/2010 10:47	82.32732016

10/29/2010 10:48	82.842324
10/29/2010 10:49	82.51943588
10/29/2010 10:50	83.01971423
10/29/2010 10:51	83.53012435
10/29/2010 10:52	82.31854356
10/29/2010 10:53	82.5405091
10/29/2010 10:54	82.0767189
10/29/2010 10:55	83.35978781
10/29/2010 10:56	82.11987438
10/29/2010 10:57	82.95790698

ABF801X2 Average (kscfh) = 82.67

10/29/2010 11:08
10/29/2010 12:07

1M

Timestamp	ABF801X2 KSCFH REFINERY GAS FLOW ABF801X2 - Average
10/29/2010 11:08	82.71639887
10/29/2010 11:09	82.90594533
10/29/2010 11:10	83.0583477
10/29/2010 11:11	82.79671656
10/29/2010 11:12	82.87629166
10/29/2010 11:13	82.96423098
10/29/2010 11:14	83.36319466
10/29/2010 11:15	82.86801637
10/29/2010 11:16	83.16958758
10/29/2010 11:17	82.61403027
10/29/2010 11:18	82.40945899
10/29/2010 11:19	82.64472453
10/29/2010 11:20	82.6796367
10/29/2010 11:21	82.79657841
10/29/2010 11:22	82.21915366
10/29/2010 11:23	82.93144277
10/29/2010 11:24	83.00883656
10/29/2010 11:25	82.04412422
10/29/2010 11:26	82.71964156
10/29/2010 11:27	81.92982489
10/29/2010 11:28	83.32859592
10/29/2010 11:29	82.33100122
10/29/2010 11:30	82.4864954
10/29/2010 11:31	83.15157229
10/29/2010 11:32	82.32446925
10/29/2010 11:33	82.34120401
10/29/2010 11:34	82.89329999
10/29/2010 11:35	82.1493927
10/29/2010 11:36	83.34312375
10/29/2010 11:37	82.41482169
10/29/2010 11:38	82.93590247
10/29/2010 11:39	82.71692308
10/29/2010 11:40	82.72795385
10/29/2010 11:41	82.81948433
10/29/2010 11:42	82.58120397
10/29/2010 11:43	81.72540963
10/29/2010 11:44	82.92142061
10/29/2010 11:45	82.38091138
10/29/2010 11:46	83.15470753
10/29/2010 11:47	83.19745827
10/29/2010 11:48	83.21203537
10/29/2010 11:49	82.4681146
10/29/2010 11:50	82.72363281
10/29/2010 11:51	81.83189551
10/29/2010 11:52	82.77304382
10/29/2010 11:53	83.17109865
10/29/2010 11:54	82.16029523
10/29/2010 11:55	82.21286252
10/29/2010 11:56	83.01373583

10/29/2010 11:57	82.85126483
10/29/2010 11:58	83.16860021
10/29/2010 11:59	82.60777505
10/29/2010 12:00	81.5543286
10/29/2010 12:01	82.28728161
10/29/2010 12:02	82.70008977
10/29/2010 12:03	82.38112869
10/29/2010 12:04	82.74213397
10/29/2010 12:05	82.85988433
10/29/2010 12:06	82.51387933
10/29/2010 12:07	82.41572946

APPENDIX F:
CALIBRATIONS, AUDITS AND CERTIFICATIONS

AIR LIQUIDE Air Liquide America Specialty Gases LLC SCOTT™

COMPLIANCE CLASS

Dual-Analyzed Calibration Standard

500 WEAVER PARK RD, LONGMONT, CO 80501 Phone: 888-253-1635 Fax: 303-772-7673

CERTIFICATE OF ACCURACY: Interference Free™ Multi-Component EPA Protocol Gas

Assay Laboratory
AIR LIQUIDE AMERICA SPECIALTY GASES LLC
500 WEAVER PARK RD
LONGMONT, CO 80501

P.O. No.: SOURCE
Project No.: 08-84135-002

Customer
BISON ENGINEERING

1400 11TH AVE
HELENA MT 59601

ANALYTICAL INFORMATION

This certification was performed according to EPA Traceability Protocol For Assay & Certification of Gaseous Calibration Standards; Procedure G-1; September, 1997.

Cylinder Number: AAL9484 **Certification Date:** 08Jan2010 **Exp. Date:** 08Jan2012
Cylinder Pressure*:** 1850 PSIG

COMPONENT	CERTIFIED CONCENTRATION (Moles)		ACCURACY**	TRACEABILITY
CARBON MONOXIDE	24.7	PPM	+/- 2%	NIST and VSL
NITRIC OXIDE	25.1	PPM	+/- 2%	NIST and VSL
NITROGEN - OXYGEN FREE		BALANCE		
TOTAL OXIDES OF NITROGEN	25.2	PPM		Reference Value Only

*** Do not use when cylinder pressure is below 150 psig.
** Analytical accuracy is based on the requirements of EPA Protocol procedures , September 1997.

REFERENCE STANDARD

TYPE/SRM NO.	EXPIRATION DATE	CYLINDER NUMBER	CONCENTRATION	COMPONENT
NTRM 2635	02Oct2010	KAL003075	25.21 PPM	CARBON MONOXIDE
NTRM 2629	01Jun2010	KAL004228	20.36 PPM	NITRIC OXIDE

INSTRUMENTATION

INSTRUMENT/MODEL/SERIAL#	DATE LAST CALIBRATED	ANALYTICAL PRINCIPLE
FTIR//1602651	10Dec2009	FTIR
FTIR//1602651	18Dec2009	FTIR

Special Notes: PULL FROM STOCK & RECERT CYL

APPROVED BY: JW
Jon Witzak

AIR LIQUIDE Air Liquide America Specialty Gases LLC Scott™

RATA CLASS

Dual-Analyzed Calibration Standard

500 WEAVER PARK RD, LONGMONT, CO 80501 Phone: 888-253-1635 Fax: 303-772-7673

CERTIFICATE OF ACCURACY: Interference Free™ Multi-Component EPA Protocol Gas

Assay Laboratory
AIR LIQUIDE AMERICA SPECIALTY GASES LLC
500 WEAVER PARK RD
LONGMONT, CO 80501

P.O. No.: SOURCE
Project No.: 08-92459-001

Customer
BISON ENGINEERING
1400 11TH AVE
HELENA MT 59601

ANALYTICAL INFORMATION

This certification was performed according to EPA Traceability Protocol For Assay & Certification of Gaseous Calibration Standards; Procedure G-1; September, 1997.

Cylinder Number: ALM001047 **Certification Date:** 16Dec2008 **Exp. Date:** 16Dec2010
Cylinder Pressure*:** 1850 PSIG

COMPONENT	CERTIFIED CONCENTRATION (Moles)		ACCURACY**	TRACEABILITY
CARBON MONOXIDE	50.3	PPM	+/- 1%	Direct NIST and VSL
NITRIC OXIDE	50.2	PPM	+/- 1%	Direct NIST and VSL
SULFUR DIOXIDE *	50.2	PPM	+/- 1%	Direct NIST and VSL
NITROGEN - OXYGEN FREE		BALANCE		
TOTAL OXIDES OF NITROGEN	50.3	PPM		Reference Value Only

*** Do not use when cylinder pressure is below 150 psig.
** Analytical accuracy is based on the requirements of EPA Protocol Procedure G1, September 1997.

REFERENCE STANDARD

TYPE/SRM NO.	EXPIRATION DATE	CYLINDER NUMBER	CONCENTRATION	COMPONENT
NTRM 1678	15Aug2009	ALM033685	51.13 PPM	CARBON MONOXIDE
NTRM 1683	02Oct2009	KAL003376	46.90 PPM	NITRIC OXIDE
NTRM 1693	01Dec2011	KAL004056	50.20 PPM	SULFUR DIOXIDE

INSTRUMENTATION

INSTRUMENT/MODEL/SERIAL#	DATE LAST CALIBRATED	ANALYTICAL PRINCIPLE
FTIR//1602651	11Dec2008	FTIR
FTIR//1602651	13Dec2008	FTIR
FTIR//1602651	10Dec2008	FTIR

ANALYZER READINGS

(Z=Zero Gas R=Reference Gas T=Test Gas r=Correlation Coefficient)

CARBON MONOXIDE

First Triad Analysis
Date: 09Dec2008 Response Unit:PPM
Z1=-0.01647 R1=50.61568 T1=50.00288
R2=50.87477 Z2=0.01077 T2=50.07501
Z3=0.06894 T3=50.08587 R3=50.96475
Avg. Concentration: 50.29 PPM

Second Triad Analysis
Date: 16Dec2008 Response Unit: PPM
Z1=-0.02178 R1=51.15800 T1=50.44340
R2=51.19311 Z2=-0.00849 T2=50.45387
Z3=0.02790 T3=50.47216 R3=51.31460
Avg. Concentration: 50.37 PPM

Calibration Curve
Concentration=A+Bx+Cx2+Dx3+Ex4
r=9.99999E-1
Constants: A=0.00000E+0
B=8.21855E-1 C=4.98000E-4
D=1.00000E-6 E=0.00000E+0

NITRIC OXIDE

First Triad Analysis
Date: 09Dec2008 Response Unit:PPM
Z1=0.00645 R1=46.48513 T1=49.78880
R2=46.57250 Z2=0.05409 T2=49.92122
Z3=0.06540 T3=49.92494 R3=46.66085
Avg. Concentration: 50.23 PPM

Second Triad Analysis
Date: 16Dec2008 Response Unit: PPM
Z1=-0.05769 R1=46.78940 T1=50.10892
R2=46.81631 Z2=-0.03310 T2=50.24074
Z3=0.01926 T3=50.25128 R3=46.99699
Avg. Concentration: 50.23 PPM

Calibration Curve
Concentration=A+Bx+Cx2+Dx3+Ex4
r=9.99989E-1
Constants: A=0.00000E+0
B=9.93289E-1 C=1.83000E-4
D=0.00000E+0 E=0.00000E+0

SULFUR DIOXIDE *

First Triad Analysis
Date: 09Dec2008 Response Unit:PPM
Z1=-0.02607 R1=49.99489 T1=49.99024
R2=50.00260 Z2=-0.01334 T2=50.01462
Z3=-0.00715 T3=50.02732 R3=50.01085
Avg. Concentration: 50.21 PPM

Second Triad Analysis
Date: 16Dec2008 Response Unit: PPM
Z1=-0.01254 R1=50.10446 T1=50.07636
R2=50.10812 Z2=-0.00166 T2=50.08187
Z3=0.00089 T3=50.12124 R3=50.10917
Avg. Concentration: 50.19 PPM

Calibration Curve
Concentration=A+Bx+Cx2+Dx3+Ex4
r=9.99989E-1
Constants: A=0.00000E+0
B=9.96223E-1 C=-2.70000E-5
D=0.00000E+0 E=0.00000E+0

APPROVED BY: _____
Jon Witzak

AIR LIQUIDE Air Liquide America Specialty Gases LLC Scott

RATA CLASS

Dual-Analyzed Calibration Standard

500 WEAVER PARK RD, LONGMONT, CO 80501 Phone: 888-253-1635 Fax: 303-772-7673

CERTIFICATE OF ACCURACY: Interference Free™ Multi-Component EPA Protocol Gas

Assay Laboratory
AIR LIQUIDE AMERICA SPECIALTY GASES LLC
500 WEAVER PARK RD
LONGMONT, CO 80501

P.O. No.: SOURCE
Project No.: 08-81265-001

Customer
BISON ENGINEERING

1400 11TH AVE
HELENA MT 59601

ANALYTICAL INFORMATION

This certification was performed according to EPA Traceability Protocol For Assay & Certification of Gaseous Calibration Standards; Procedure G-1; September, 1997.

Cylinder Number: ALM013304 **Certification Date:** 17Dec2008 **Exp. Date:** 17Dec2010
Cylinder Pressure*:** 1830 PSIG

COMPONENT	CERTIFIED CONCENTRATION (Moles)		ACCURACY**	TRACEABILITY
CARBON MONOXIDE	101	PPM	+/- 1%	Direct NIST and VSL
NITRIC OXIDE	101	PPM	+/- 1%	Direct NIST and VSL
SULFUR DIOXIDE *	101	PPM	+/- 1%	Direct NIST and VSL
NITROGEN - OXYGEN FREE		BALANCE		
TOTAL OXIDES OF NITROGEN	102.	PPM		Reference Value Only

*** Do not use when cylinder pressure is below 150 psig.
** Analytical accuracy is based on the requirements of EPA Protocol Procedure G1, September 1997.

REFERENCE STANDARD

TYPE/SRM NO.	EXPIRATION DATE	CYLINDER NUMBER	CONCENTRATION	COMPONENT
NTRM 1679	18Dec2011	ALM013095	101.7 PPM	CARBON MONOXIDE
NTRM 1684	15Oct2012	KAL004342	95.84 PPM	NITRIC OXIDE
NTRM 1694	15Aug2009	ALM037832	97.81 PPM	SULFUR DIOXIDE

INSTRUMENTATION

INSTRUMENT/MODEL/SERIAL#	DATE LAST CALIBRATED	ANALYTICAL PRINCIPLE
FTIR//1602651	11Dec2008	FTIR
FTIR//1602651	13Dec2008	FTIR
FTIR//1602651	10Dec2008	FTIR

ANALYZER READINGS

(Z=Zero Gas R=Reference Gas T=Test Gas r=Correlation Coefficient)

CARBON MONOXIDE

First Triad Analysis
Date: 09Dec2008 Response Unit:PPM
Z1=-0.02480 R1=101.8735 T1=100.5537
R2=101.8872 Z2=-0.01002 T2=100.6505
Z3=-0.00328 T3=100.6596 R3=102.0485
Avg. Concentration: 100.4 PPM

Second Triad Analysis
Date: 17Dec2008 Response Unit: PPM
Z1=-0.01386 R1=102.4886 T1=101.4986
R2=102.5108 Z2=-0.00498 T2=101.5147
Z3=0.01293 T3=101.5885 R3=102.7963
Avg. Concentration: 100.6 PPM

Calibration Curve
Concentration=A+Bx+Cx2+Dx3+Ex4
r=9.99999E-1
Constants: A=0.00000E+0
B=8.21855E-1 C=4.98000E-4
D=1.00000E-6 E=0.00000E+0

NITRIC OXIDE

First Triad Analysis
Date: 09Dec2008 Response Unit:PPM
Z1=-0.00113 R1=95.89270 T1=100.5821
R2=96.02083 Z2=0.03193 T2=100.6464
Z3=0.04401 T3=100.8771 R3=96.10879
Avg. Concentration: 100.5 PPM

Second Triad Analysis
Date: 17Dec2008 Response Unit: PPM
Z1=-0.15026 R1=96.70558 T1=101.8636
R2=96.79894 Z2=-0.12011 T2=101.9520
Z3=-0.06956 T3=102.1099 R3=97.02942
Avg. Concentration: 100.9 PPM

Calibration Curve
Concentration=A+Bx+Cx2+Dx3+Ex4
r=9.99992E-1
Constants: A=0.00000E+0
B=9.51303E-1 C=1.79000E-4
D=0.00000E+0 E=0.00000E+0

SULFUR DIOXIDE *

First Triad Analysis
Date: 09Dec2008 Response Unit:PPM
Z1=-0.41417 R1=98.44652 T1=101.5490
R2=98.75211 Z2=-0.25559 T2=101.7914
Z3=0.15930 T3=101.8030 R3=98.82936
Avg. Concentration: 100.8 PPM

Second Triad Analysis
Date: 17Dec2008 Response Unit: PPM
Z1=0.06521 R1=98.47750 T1=101.4761
R2=98.59269 Z2=0.06659 T2=101.8298
Z3=0.50039 T3=101.8491 R3=98.63599
Avg. Concentration: 100.9 PPM

Calibration Curve
Concentration=A+Bx+Cx2+Dx3+Ex4
r=9.99996E-1
Constants: A=0.00000E+0
B=9.97756E-1 C=3.00000E-6
D=0.00000E+0 E=0.00000E+0

APPROVED BY: JW
Jon Witzak

AIR LIQUIDE Air Liquide America Specialty Gases LLC SCOTT™

RATA CLASS

Dual-Analyzed Calibration Standard

500 WEAVER PARK RD, LONGMONT, CO 80501 Phone: 888-253-1635 Fax: 303-772-7673

CERTIFICATE OF ACCURACY: EPA Protocol Gas

Assay Laboratory

SCOTT SPECIALTY GASES
500 WEAVER PARK RD
LONGMONT, CO 80501

P.O. No.: 1510
Project No.: 08-72246-001

Customer

BISON ENGINEERING

1411 4TH AVENUE NORTH
BILLINGS MT 59101

ANALYTICAL INFORMATION

This certification was performed according to EPA Traceability Protocol For Assay & Certification of Gaseous Calibration Standards; Procedure G-1; September, 1997.

Cylinder Number: AAL14596 **Certification Date:** 20Oct2008 **Exp. Date:** 20Oct2011
Cylinder Pressure*:** 2000 PSIG

COMPONENT	CERTIFIED CONCENTRATION (Moles)		ANALYTICAL ACCURACY**	TRACEABILITY
CARBON DIOXIDE	9.99	%	+/- 1%	Direct NIST and NMi
OXYGEN	10.0	%	+/- 1%	Direct NIST and NMi
NITROGEN		BALANCE		

*** Do not use when cylinder pressure is below 150 psig.

** Analytical accuracy is based on the requirements of EPA Protocol Procedure G1, September 1997.

REFERENCE STANDARD

TYPE/SRM NO.	EXPIRATION DATE	CYLINDER NUMBER	CONCENTRATION	COMPONENT
NTRM 1675	02Oct2012	K018062	13.93 %	CARBON DIOXIDE
NTRM 2658	02Oct2010	ALM065029	9.930 %	OXYGEN

INSTRUMENTATION

INSTRUMENT/MODEL/SERIAL#	DATE LAST CALIBRATED	ANALYTICAL PRINCIPLE
HPGC/5890/3115A34624	08Oct2008	TCD
HPGC/5890/3115A34624	20Oct2008	TCD

ANALYZER READINGS

(Z=Zero Gas R=Reference Gas T=Test Gas r=Correlation Coefficient)

First Triad Analysis | Second Triad Analysis | Calibration Curve

CARBON DIOXIDE

Date: 21Oct2008 Response Unit:AREA

Z1=0.00000	R1=302123.0	T1=218407.0
R2=302042.0	Z2=0.00000	T2=218336.0
Z3=0.00000	T3=218337.0	R3=301601.0

Avg. Concentration: 9.991 %

Concentration=A+Bx+Cx2+Dx3+Ex4
r=0.999998
Constants: A=0.006186
B=.000046 C=
D= E=

OXYGEN

Date: 20Oct2008 Response Unit:AREA

Z1=0.00000	R1=178904.0	T1=181777.0
R2=180194.0	Z2=0.00000	T2=181592.0
Z3=0.00000	T3=181832.0	R3=179828.0

Avg. Concentration: 10.05 %

Concentration=A+Bx+Cx2+Dx3+Ex4
r=0.999986
Constants: A=-0.053757
B=0.000056 C=
D= E=

BISON
FEB 03 2009
RECEIVED

APPROVED BY: _____
ADAM HANLEY

AIR LIQUIDE Air Liquide America Specialty Gases LLC SCOTT™

RATA CLASS

Dual-Analyzed Calibration Standard

500 WEAVER PARK RD, LONGMONT, CO 80501 Phone: 888-253-1635 Fax: 303-772-7673

CERTIFICATE OF ACCURACY: EPA Protocol Gas

Assay Laboratory

SCOTT SPECIALTY GASES
500 WEAVER PARK RD
LONGMONT, CO 80501

P.O. No.: 1510
Project No.: 08-72246-002

Customer

BISON ENGINEERING

1411 4TH AVENUE NORTH
BILLINGS MT 59101

ANALYTICAL INFORMATION

This certification was performed according to EPA Traceability Protocol For Assay & Certification of Gaseous Calibration Standards; Procedure G-1; September, 1997.

Cylinder Number: ALM021986 **Certification Date:** 08Jul2008 **Exp. Date:** 08Jul2011
Cylinder Pressure*:** 2000 PSIG

COMPONENT	CERTIFIED CONCENTRATION (Moles)		ANALYTICAL ACCURACY**	TRACEABILITY
CARBON DIOXIDE	20.0	%	+/- 1%	Direct NIST and NMi
OXYGEN	20.0	%	+/- 1%	Direct NIST and NMi
NITROGEN		BALANCE		

*** Do not use when cylinder pressure is below 150 psig.
** Analytical accuracy is based on the requirements of EPA Protocol Procedure G1, September 1997.

REFERENCE STANDARD

TYPE/SRM NO.	EXPIRATION DATE	CYLINDER NUMBER	CONCENTRATION	COMPONENT
NTRM 1675	02Oct2012	K018062	13.93 %	CARBON DIOXIDE
NTRM 2658	02Oct2010	ALM065029	9.930 %	OXYGEN

INSTRUMENTATION

INSTRUMENT/MODEL/SERIAL#	DATE LAST CALIBRATED	ANALYTICAL PRINCIPLE
HPGC/5890/3115A34624	30Jun2008	TCD
HPGC/5890/3115A34624	01Jul2008	TCD

ANALYZER READINGS

(Z=Zero Gas R=Reference Gas T=Test Gas r=Correlation Coefficient)

First Triad Analysis | Second Triad Analysis | Calibration Curve

CARBON DIOXIDE

Date: 30Jun2008	Response Unit:AREA	
Z1=0.00000	R1=301170.0	T1=426897.0
R2=300871.0	Z2=0.00000	T2=427040.0
Z3=0.00000	T3=426929.0	R3=300706.0
Avg. Concentration:	19.97	%

Second Triad Analysis:

Concentration=A+Bx+Cx2+Dx3+Ex4	
r=0.999998	
Constants:	A=0.0061954
B=4.46E-05	C=4.29E-12
D=	E=

OXYGEN

Date: 08Jul2008	Response Unit:AREA	
Z1=0.00000	R1=175686.0	T1=350377.0
R2=175473.0	Z2=0.00000	T2=350825.0
Z3=0.00000	T3=350626.0	R3=175621.0
Avg. Concentration:	20.02	%

Second Triad Analysis:

Concentration=A+Bx+Cx2+Dx3+Ex4	
r=0.999946	
Constants:	A=-0.05789865
B=5.73E-05	C=
D=	E=

APPROVED BY: ADAM HANLEY

BISON
FEB 03 2009
RECEIVED

AIR LIQUIDE
Scott Specialty Gases
Air Liquide America Specialty Gases LLC

500 WEAVER PARK RD, LONGMONT, CO 80501

Phone: 888-253-1635 Fax: 303-772-7673

CERTIFIED MASTER CLASS

Single-Certified Calibration Standard

CERTIFICATE OF ACCURACY: Certified Master Class Calibration Standard

Product Information
Project No.: 08-61520-001
Item No.: 08020002620PAL
P.O. No.: 127

Cylinder Number: AAL13811
Cylinder Size: AL
Certification Date: 16Apr2008
Expiration Date: 16Apr2010

Customer

BISON ENGINEERING
CAL LOOMIS
1400 11TH AVE
HELENA, MT 59601

CERTIFIED CONCENTRATION

Component Name	Concentration (Moles)		Accuracy (+/-%)
NITROGEN DIOXIDE	50.3	PPM	2
AIR		BALANCE	

TRACEABILITY

Traceable To

Scott Reference Standard

APPROVED BY: SAM BENNETT

DATE: 4/21/08

APPENDIX G:
NOMENCLATURE AND FORMULAE

Nomenclature

A_n sampling nozzle cross-sectional area , ft^2

A_s stack cross-sectional area, ft^2
Note: Method 2 refers to this as A

a mean particle projected area

Btu unit heat value (British thermal unit)

B_{wm} percent moisture in gas at meter

B_{ws} percent moisture in stack gas

C_1 viscosity constant, 51.12 micropoise for K (51.05 micropoise for °R)

C_2 viscosity constant, 0.372 micropoise/K (0.207 micropoise/°R)

C_3 viscosity constant, 1.05×10^{-4} micropoise/K^2 (3.24×10^{-5} micropoise/$°R^2$)

C_4 viscosity constant, 53.147 micropoise/ fraction O_2

C_5 viscosity constant, 74.143 micropoise/ fraction H_2O

C_a concentration of acetone blank residue, mg/g

C_{cond} concentration of condensibles, grain/dscf

C_{cors} concentration of coarse particulate, gr/dscf

C_p pitot tube calibration coefficient, 0.84 for type S pitot tube

Cp(std) standard pitot-static tube calibration coefficient

C_{PM10} concentration of PM_{10} particulate, gr/dscf

C_s particulate concentration in stack gas, mass/volume

cs12 particulate concentration corrected to 12 percent CO_2

c_{s50} particulate concentration corrected to 50 percent excess air

cws particulate concentration on a wet basis, mass/wet volume

$C_{X\,(corr)}$ actual gas concentration corrected to required percent O_2

D_{50} diameter of particles having a 50 percent probability of penetration, μm

D_e equivalent diameter

D_h hydraulic diameter

$DH_@$ pressure drop across orifice meter for 0.75 CFM at standard conditions

DH pressure drop across orifice meter

D_n source sampling nozzle diameter

D_{p50} 50% effective cutoff diameter of particle, μ

D_s diameter of the stack, feet

E emission rate or mass/unit heat (Btu input)

e base of natural logarithms (ln10 = 2.302585)

%EA percent excess air

E_{hr} emission rate per hour, lb/hr

ER_{cond} emission rate of condensibles, lb/hr

ER_{cors} emission rate of coarse particulate, lb/hr

ER_{mmBtu} emission rate per mmBtu or ton of fuel, etc.

ER_{PM10} emission rate of PM_{10} particulate, lb/hr

ER_X emission rate of compound which replaces x

F_c F factor for CO_2, used with percent CO_2, wet or dry basis

F_d F factor for dry effluent, used with percent O_2, dry basis

f_o stack gas fraction O_2, by volume, dry basis

F_o fuel factor

F_w F factor for wet effluent, used with percent O_2, wet basis

ΔH average pressure differential across orifice meter at control box

$\Delta H_@$ orifice pressure, inches H_2O

ΔH_d orifice pressure head, inches H_2O, needed for cyclone flow rate

%I percent sampling rate variation, where 100% = ideal isokinetic conditions

j equal area centroid

K_1 0.001333 m^3/ml for metric units
01.1 ft^3/ml for English units
Equation 4-1

K_2 0.001335 m^3/g for metric units
1. ft^3/g for English units
Equation 4-2

K_3 0.3858 °K/mm Hg for metric units
1. °R/in. Hg for English units
Equation 4-3

K_p pitot tube equation dimensional constant, 85.49

L length of duct cross-section at sampling site

L_1 plume exit diameter

L_2 stack diameter

m mass

M_a acetone residue weight after evaporation, mg

mBtu thousand Btu

M_{cond} mass of condensibles

M_{cors} mass of coarse particulate

M_d dry stack gas molecular weight

m_f filter weight gain, mg

M_{fine} mass of PM_{10} particulate

mmBtu million Btu

m_n total weight of collected particulate, mg

$m_{n,\ pm10}$ total weight of collected PM_{10} particulate, mg

M_s wet stack gas molecular weight

M_w molecular weight of water, 18.0 g/g-mole (18.0 lb/lb-mole)

M_{wx} molecular weight of gas species, g/gmol

n number of particles

N_{re} Reynolds Number

θ total sampling time, min.

O_1 plume opacity at exit

O_2 in-stack plume opacity

ΔP stack differential pressure recorded by the probe's type S pitot tube

Δp velocity head of stack gas, mm H_2O (in. H_2O) - *Equation 2-8*

$\sqrt{\Delta P}$ average of the square roots of ΔP (may also be referred to as $AS\Delta P$)

$\sqrt{\Delta P_1}$ square root of ΔP at point 1 of the current test

$\sqrt{\Delta P_1}'$ square root of ΔP at point 1 of the previous traverse

$\sqrt{\Delta P}'$ average of the square roots of ΔP from the previous traverse (may also be referred to as $AS\Delta P'$)

$\%CO_2$ percent CO_2 by volume, dry basis

$\%O_2$ percent O_2 by volume, dry basis

%CO percent CO by volume, dry basis

$\%N_2$ percent N_2 by volume, dry basis

P_{atm} atmospheric pressure

P_b barometric pressure ($P_b = P_{atm}$)

P_{bar} barometric pressure at measurement site, mm Hg (in. Hg)

P_g stack static pressure, mm Hg (in. Hg)

P_i pitch angle at traverse point i, degree

P_m absolute pressure at the meter

pmr pollutant mass rate

P_p absolute barometric pressure at the sample location, inches Hg

P_s absolute pressure in the stack

P_{std} standard absolute pressure, 760 mm Hg (29.92 in. Hg)

pts number of traverse points during the test, minimum of 6, maximum of 12

ρ_w density of water, 0.9982 g/ml (0.002201 lb/ml)

q time in minutes

Q_a stack gas volumetric flow rate, acfm

Q_s average stack gas wet volumetric flow rate, cfm (ft^3/min)

Q_{sc} actual gas flow rate through the cyclone, acfm

Q_{sc}' predicted actual gas flow rate through the cyclone, acfm

$Q_{s(std)}$ total cyclone flow rate at standard conditions, dscm/min (dscf/ min)

Q_{std} dry volumetric stack gas flow rate corrected to standard conditions

Q_w wet stack gas standard volumetric flow, ft^3/min, wscfm

r path length

R ideal gas constant, 0.06236 (mm Hg) (m^3)/(g-mole) (K) for metric units and 21.85 (in. Hg) (ft^3)/(lb-mole) (°R) for English units

R_i resultant angle at traverse point i, degree

R_{max} multiplier for V_n

R_{min} multiplier for V_n

T_m absolute temperature at meter, K (°R)

t_s stack temperature, °C (°F)

T_s absolute stack temperature, K (°R)

$T_{s(avg)}$ average stack gas temperature, absolute, °R

T_{std} standard absolute temperature, 293 K (528°R)

T_t duration of test

μ_s stack gas absolute viscosity, μ poise

V_f final volume of condenser water, ml

V_i initial volume, if any, of condenser water, ml

V_m dry gas volume measured by dry gas meter, dcm (dcf)

ΔV_m incremental dry gas volume measured by dry gas meter at each traverse point, dcm (dcf)

V_{max} maximum allowed nozzle velocity , fps

V_{min} minimum allowed nozzle velocity, fps

$V_{m(std)}$ dry gas volume measured by the dry gas meter, corrected to standard conditions, dscm (dscf)

V_n target nozzle velocity, fps

v_s average stack gas velocity, m/sec (ft/sec)

V_w volume of water vapor

$V_{w(std)}$ volume of water vapor in the gas sample, corrected to standard conditions, scf (standard cubic feet)

$V_{wc(std)}$ volume of water vapor condensed corrected to standard conditions, scm (scf)

$V_{wsg(std)}$ volume of water vapor collected in silica gel corrected to standard conditions, scm (scf)

Volume H_2O metric units = 0.00134 m^3/ml x ml H_2O
English units = 0.04707 ft^3/mlxmlH_2O

W width of the duct cross-section at the sampling site

W_f final weight of silica gel or silica gel plus impinger, g

W_i initial weight of silica gel or silica gel plus impinger, g

W_{lc} weight of collected water, g

X_d fraction of dry gas

Y dry gas meter calibration factor

Y_i yaw angle at traverse point i, degree
0.280 molecular weight of N_2 or CO divided by 100

1. molecular weight of O_2 divided by 100

0.440 molecular weight of CO_2 divided by 100

18.0 molecular weight of water, g/g-mole (lb/lb-mole)

3,600 conversion factor, sec/hr

Subscripts:

atm atmospheric

ave average

b barometric

d dry gas basis

f final

g gauge

i initial

m at meter

n at nozzle

p of pitot tube

s at stack

SCF standard cubic feet

std standard conditions

w wet basis

FORMULAE

1. Dry Gas Volume - Corrected to STP (40 CFR 60, App. A, Eq. 5-1)

$$V_{m(std)} = V_m Y \left(\frac{T_{std}}{T_m} \right) \left[\frac{P_{b_{ar}} + \frac{\overline{\Delta H}}{13.6}}{P_{std}} \right]$$

Y is obtained from post-test meter calibrations.

2. Water Vapor Volume - Corrected to STP (40 CFR 60, App. A, Eq. 5-2)

$$V_{w(std)} = V_{lc} \left(\frac{\rho_w}{M_w} \right) \left(\frac{RT_{std}}{P_{std}} \right)$$

Note: $W_{lc} = V_{lc}\, \rho_w$

3. Stack Gas Moisture Content (40 CFR 60 App. A, Eq. 5-3, modified)

$$B_{ws} = \frac{V_{w(std)}}{V_{m(std)} + V_{w(std)}}$$

4. Stack Gas Dry and Wet Molecular Weight (40 CFR 60 App. A, Eq. 3-1, 2-5)

$$M_d = 0.440\,(\%CO_2) + 0.320\,(\%O_2) + 0.280\,(\%N_2 + \%CO)$$

$$M_s = M_d\,(1 - B_{ws}) + 18.0\,B_{ws}$$

5. Average Stack Gas Velocity (40 CFR 60 App. A, Eq. 2-9)

$$v_s = K_p C_p \left(\frac{\sum_1^n \sqrt{\Delta p}}{n} \right) \sqrt{\frac{T_{s(avg)}}{P_S M_S}}$$

6. Average Stack Gas Wet Volumetric Flow Rate

$$Q_s = 60 v_s A_s$$

7. Average Stack Gas Dry Flow Rate Corrected to Standard Conditions (40 CFR 60 App. A, Eq. 2-10, modified)

$$Q_{std} = Q_s (1 - B_{ws}) \frac{T_{std}}{T_{s(avg)}} \frac{P_s}{P_{std}}$$

8. TSP Particulate Concentration Corrected to Standard Conditions (40 CFR 60 App. A, Eq. 5-6, modified)

$$c_{s_{lb}} = 2.205 \, x \, 10^{-6} \frac{m_n}{V_{m(std)}}$$

$$c_{s_{gr}} = 15.43 \, x \, 10^{-3} \frac{m_n}{V_{m(std)}}$$

Note: $C_{s,lb}$ = lb/dscf
$C_{s,gr}$ = grains/dscf
m_n = mg

9. TSP Emission Rate per Hour

$$E_{hr} = c_s Q_{std} 60$$

10. Percent Isokinetic Sampling Variation (40 CFR 60 App. A, Eq. 5-8)

$$I\% = \frac{T_{s(avg)} V_{m(std)} P_{std} 100}{T_{std} v_s \Theta A_n P_s 60 (1 - B_{ws})}$$

11. Percent moisture at 100 percent saturation (%SVP) equation:

$$\% SVP = \left[\frac{100}{P_S}\right] x \ 10^{\left[6.6911 - \frac{3144}{(T_{ws} - 390.86)}\right]}$$

where: P_s = stack pressure (absolute), inches of mercury
T_{ws} = saturated stack temperature, degrees F

12. Emission Rate Compressor Engines (g/BHP-Hr)

$$E = \frac{(e) \ PPM \ Q_{STD}}{BHP}$$

13. Brake Horsepower for Compressor Engines

$$BHP = [43.6 \ x \ MMCFD \ x \left(\frac{T_{ts}}{T_{std2}}\right) x \left(\frac{K}{(K-1)}\right) x \left(R_2^{\frac{(k-1)}{k}} - 1\right) x \ LE \ x \ FE] + Fan \ HP$$

14. Pounds Per Hour Emission Rate

$$lb/hr = E * BHP * \frac{lb}{453.59 \ g}$$

15. Analyzer Calibration error, in general, % diff. ≤ 2%

$$\% \ Diff. = \left(\frac{Cal. \ gas \ ppm - Analyzer \ response \ ppm}{Analyzer \ span \ ppm}\right) x100$$

16. System bias, in general <5% for both zero and upscale gases

$$system\ Bias = \left(\frac{system\ cal.\ response\ ppm - Analyzer\ response\ ppm}{span\ gas\ ppm}\right) x100$$

17. Calibration drift <3% for both zero and upscale gases during each run

$$Cal.\ Drift = \left(\frac{final\ sys\ Cal.\ resp.\ ppm - initial\ sys\ cal.\ resp.\ ppm}{span\ gas\ ppm}\right) x100$$

$$System\ Calibration\ Bias = \left(\frac{System\ Cal.\ Response\ ppm - Analyzer\ Cal.\ Response\ ppm}{span\ gas\ ppm}\right) x100$$

18.
19.

$$Drift = \left(\frac{Final\ System\ Cal.\ Response\ ppm - Initial\ System\ Cal.\ Response\ ppm}{Span\ gas\ ppm}\right) x100$$

20. Analyzer calibration error, in general, %diff. ≤ 2%

$$\%\ Diff. = \left(\frac{Cylinder\ ppm - analyzer\ response\ ppm}{span\ gas\ ppm}\right) x100$$

21. Parts per million by volume (ppmv) to pounds per hour (lbs/hr)

lbs/hr = 1.558×10^{-7} x molecular weight x flow, dscfm x ppmv

lbs/hr = (ppmv) ($1.558\ e^{-7}$) (MW) (dscfm)

ppm = parts per million
dscfm = dry standard cubic feet per minute
MW = molecular weight

22. Corrected concentrations to 12% CO_2

$$Cs_{12} = Cs \frac{12}{\%CO_2}$$

23. Correcting concentrations to 6% O_2

$$Cs_{\%O_2d} = Cs \left[\frac{20.9 - 6\ \%O_2}{20.9 - \%O_{2d}} \right]$$

24. Concentration moisture corrections

Cd = (Cw) / (1 - Bws)

Cd = concentration dry
Cw = concentration wet
Bws = moisture content

25. Fuel Burning Rule

Fuel Input: Measure fuel introduced to the boiler bank. For example,

$$E = 0.882 * H^{-0.1664}$$
$$E = 0.882\ (12{,}500\ lb_{fuel}/hr \times 4800\ Btu/lb_{fuel})/1\times10^6)^{-0.1664}$$
$$E = 0.882\ (60\ MMBtu/hr)^{-0.1664}$$
$$E = 0.4463\ lb/MMBtu$$

Where E is the maximum allowable particulate emissions rate in lbs per MMBtu.

Steam Production: Measure steam produced by the boiler bank. For example,

$$E = 0.882 * H^{-0.1664}$$
$$E = 0.882\ [(30{,}000\ lb_{steam}/hr \times 1{,}200\ Btu/lb_{steam})/(60\%_{boiler\ efficiency})/(1\times10^6)]^{-0.1664}$$
$$E = 0.882\ (60\ MMBtu/hr)^{-0.1664}$$
$$E = 0.4463\ lb/MMBtu$$

Where E is the maximum allowable particulate emissions rate in lbs per MMBtu.