MOISTURE, OXYGEN, NITROGEN OXIDES, AND VOLATILE ORGANIC COMPOUNDS EMISSIONS AND OXYGEN AND NITROGEN OXIDES RELATIVE ACCURACY TEST AUDIT REPORT

FOR

HUNT REFINING
No. 2 Hydrogen Plant Reformer
Tuscaloosa, Alabama

November 17 and 18, 2010
Revised: February 25, 2011

TABLE OF CONTENTS

INTRODUCTION 1
DESCRIPTION OF SAMPLING PROGRAM 2
Moisture Testing 2
Oxygen and Nitrogen Oxides Testing 2
Volatile Organic Compounds Testing 3
Relative Accuracy Test Audit 4
SUMMARY AND DISCUSSION OF RESULTS 5
PROCESS DESCRIPTION 17
SAMPLE POINT LOCATION 18
MOISTURE SAMPLING PROCEDURE (EPA Methods 1-4) 19
OXYGEN AND NITROGEN OXIDES SAMPLING PROCEDURE 21
Sample Recovery & Analysis 23
VOLATILE ORGANIC COMPOUND SAMPLING PROCEDURE 24
Sample Recovery & Analysis 25
QUALITY ASSURANCE 26
CALIBRATIONS 27
PITOT TUBES 27
DIFFERENTIAL PRESSURE GAUGES 27
TEMPERATURE SENSORS 28
NOZZLES 28
DRY GAS METER 28
ORIFICE 29
APPENDIX A QUALITY CONTROL OF TESTING EQUIPMENT 30
APPENDIX B FIELD DATA SHEETS 35
APPENDIX C SAMPLE CALCULATIONS 37
APPENDIX D GAS CERTIFICATIONS 42
APPENDIX E OPERATIONAL DATA AND FUEL ANALYSIS 52

LIST OF TABLES

TABLE I. OXYGEN AND VOLATILE ORGANIC COMPOUNDS EMISSIONS TEST RESULTS 6
TABLE II. OXYGEN TESTING QUALITY ASSURANCE NOVEMBER 17, 2010 8
TABLE III. VOLATILE ORGANIC COMPOUNDS QUALITY ASSURANCE NOVEMBER 17, 2010 9
TABLE IV. MOISTURE TEST RESULTS – NOVEMBER 17, 2010 10
TABLE V. OXYGEN RELATIVE ACCURACY TEST AUDIT 11
TABLE VI. NITROGEN OXIDES RELATIVE ACCURACY TEST AUDIT 12
TABLE VII. OXYGEN AND NITROGEN OXIDES EMISSIONS TEST RESULTS – NOVEMBER 18, 2010 13
TABLE VIII. OXYGEN TESTING QUALITY ASSURANCE NOVEMBER 18, 2010 15
TABLE IX. NITROGEN OXIDES TESTING QUALITY ASSURANCE – NOVEMBER 18, 2010 16

ILLUSTRATIONS

FIGURE 1. OXYGEN AND VOLATILE ORGANIC COMPOUNDS STACK GAS CONCENTRATIONS 7
FIGURE 2. OXYGEN AND NITROGEN OXIDES STACK GAS CONCENTRATIONS 14
FIGURE 3. MOISTURE SAMPLING TRAIN 19
FIGURE 4. OXYGEN AND NITROGEN OXIDES SAMPLING TRAIN 21
FIGURE 5. VOLATILE ORGANIC COMPOUNDS SAMPLING TRAIN 24

1. INTRODUCTION

Sanders Engineering & Analytical Services, Inc. (SEAS) performed moisture, oxygen, nitrogen oxides, and volatile organic compounds emissions testing November 17 and 18, 2010, for Hunt Refining on the No. 2 Hydrogen Plant Reformer located at the Tuscaloosa, Alabama facility. Oxygen and nitrogen oxides relative accuracy test audits were performed on the Continuous Emissions Monitoring System (CEMS). The testing was performed in accordance with the applicable U.S. EPA procedures specified at **40 CFR, Part 60, Appendix A**, **Methods 1, 2, 3a, 4, 7e, 19, and 25a, and Appendix B, Performance Specification 2**. Further discussion of the test methods is included later in the report.

The purpose of the testing was to demonstrate compliance with the rules and regulations of the U. S. Environmental Protection Agency, and to meet the necessary requirements contained in the permit to operate issued by the Alabama Department of Environmental Management. The tests were conducted by Mr. Spencer Edwards, Mr. Bill Ward, and Mr. Brett Horton of Sanders Engineering & Analytical Services, Inc., and were coordinated with Ms. Casey Frederick of Hunt Refining. Mr. John Rinehart of the Alabama Department of Environmental Management was present to observe the testing.

2. DESCRIPTION OF SAMPLING PROGRAM

The sampling program consisted of moisture, oxygen, nitrogen oxides, and volatile organic compounds testing in compliance with U.S. EPA methods. The following is a brief description of these types of tests.

2.1. Moisture Testing

The quantitative determination of moisture was made in accordance with **40 CFR, Part 60, Appendix A, Method 4**. This test procedure generally requires the insertion of a probe into the stack. A sample of greater than twenty cubic feet is pulled through a set of impingers for the condensation of water from the stack gases. The quantity of gas sampled is measured by a calibrated dry gas meter. Calibrations of the testing equipment are included in Appendix A. The completed field data sheets are presented in Appendix B. Sample calculations of Run 1 on the Heater BA-603 are included in Appendix C. A detailed description of the testing procedures and schematic of the sampling train is presented in Section 6.

2.2. Oxygen and Nitrogen Oxides Testing

Oxygen and nitrogen oxides testing was accomplished by withdrawing a sample of the stack gas through a stainless steel probe, a moisture removal system, and into instruments specifically designed for the measurement of the particular pollutant of interest. These instruments responded linearly to concentrations of the pollutants. The output of these instruments is a continuous analog voltage which is digitized and input into a PC based data acquisition system. The PC data acquisition system polls the instruments 1000 times per second. The computer averages these readings into one-second averages during calibrations and one minute averages at other times. These one second and one minute averages are written to the hard disk each minute to ensure no data loss due to power failure or

other inadvertent occurrence. The computer stores in memory all calibration and stack gas analyses during each run. The averages for each calibration and for each independent run were averaged for the time of the runs. A description of the testing procedure is included in Section 7. The gas certifications are included in Appendix D. The operational data as supplied by a representative of Hunt Refining is presented in Appendix E.

2.3. Volatile Organic Compounds Testing

Volatile organic compounds testing was accomplished by withdrawing a sample of the stack gas through a heated stainless steel probe, into heated dilution system and transported through Teflon tubing, all maintained at greater than 230 degrees Fahrenheit, into an instrument specifically designed for the measurement of volatile organic compounds. This instrument responded linearly to concentrations of volatile organic compounds. The output of this instrument is a continuous analog voltage that is digitized and input into a PC-based data acquisition system. The PC data acquisition system polls the instrument 1000 times per second. The computer averages these readings into one-second averages during calibrations and one-minute averages at other times. These one-second and one-minute averages are written to the hard disk each minute to ensure no data loss due to power failure or other inadvertent occurrence. The computer stores in memory all calibration and stack gas analyses during each run. The averages for each calibration and for each independent run were averaged and reported. A description of the testing procedures for volatile organic compounds is included in Section 8. The gas certifications are included in Appendix D.

2.4. Relative Accuracy Test Audit

The oxygen and nitrogen oxides relative accuracy was calculated from the simultaneous measurement of stack gas concentrations by the CEMS and SEAS reference monitors. The calculations and equations are those specified by the U. S. EPA at **40 CFR, Part 60, Appendix B**.

3. SUMMARY AND DISCUSSION OF RESULTS

The results of the oxygen and volatile organic compounds testing performed November 17, 2010 are presented in Table I. Graphical representations of the oxygen and volatile organic compounds concentrations are presented in Figure 1. The quality assurance for the oxygen and volatile organic compounds testing is presented in Tables II and III. The results of the moisture testing performed are presented in Table IV. The results of the oxygen and nitrogen oxides relative accuracy test audits performed November 18, 2010 are included in Tables V and VI. The summary of the oxygen and nitrogen oxides emissions are presented in Table VII. Graphical representations of the oxygen and nitrogen oxides concentrations are presented in Figure 2. The quality assurance for the oxygen and nitrogen oxides tests is presented in Tables VIII and IX.

The summary of results is presented below.

Unit	Parameter	Actual Emission Rate	Allowable Emission Rate
No. 2 Hydrogen Plant Reformer	Nitrogen Oxides	0.016 Lbs/MMbtu	0.035 Lbs/MMbtu
	Nitrogen Oxides	2.99 Lbs/hr	8.9 Lbs/hr
	Volatile Organic Compounds	0.0005 Lbs/MMbtu	0.0054 Lbs/MMbtu
	Volatile Organic Compounds	0.0783 lbs/hr	1.4 lbs/hr
	Nitrogen Oxides RATA	9.745	20
	Oxygen RATA	6.576	20

TABLE I. OXYGEN AND VOLATILE ORGANIC COMPOUNDS EMISSIONS TEST RESULTS
HUNT REFINING
NO. 2 HYDROGEN PLANT REFORMER
Wednesday, November 17, 2010

TEST	Start Time Military	Stop Time Military	Water Vapor in Stack Gas (Percent)	Fuel Gas Heat Input (measured) (MMbtu/Hour)	Fuel Gas F Factor Oxygen (Dry) (SDCF/MMbtu)	PSA Off Gas Heat Input (measured) (MMbtu/Hour)	PSA Off Gas F Factor Oxygen (Dry) (SDCF/MMbtu)	Total Heat Input (measured) (MMbtu/Hour)	Average F Factor Oxygen (Dry) (SDCF/MMbtu)	Oxygen (Dry) (measured) (Percent)	Oxygen (Wet) (calculated) (Percent)	Volatile Organic Compounds Emissions (ppm-wet)	Volatile Organic Compounds Emissions (ppm-dry)	Volatile Organic Compounds Emissions (O2 F factor) (Lbs/MMbtu)	Volatile Organic Compounds Emissions (O2 F factor) (Lbs/hour)
RUN 1	15:17	15:38	19.8	25.1	8,285	146.0	8,461	171.1	8,435	2.68	2.15	0.36	0.45	0.0005	0.0851
RUN 2	15:39	16:00	19.8	25.1	8,285	146.0	8,461	171.1	8,435	2.67	2.14	0.31	0.39	0.0004	0.0733
RUN 3	16:01	16:22	19.8	25.1	8,285	146.0	8,461	171.1	8,435	2.72	2.18	0.40	0.50	0.0006	0.0948
RUN 4	16:32	16:53	19.8	25.1	8,285	146.0	8,461	171.1	8,435	2.68	2.15	0.37	0.46	0.0005	0.0875
RUN 5	16:54	17:15	19.8	25.1	8,285	146.0	8,461	171.1	8,435	2.65	2.12	0.33	0.41	0.0005	0.0779
RUN 6	17:16	17:37	19.8	25.1	8,285	146.0	8,461	171.1	8,435	2.76	2.21	0.32	0.40	0.0004	0.0760
RUN 7	17:48	18:09	20.3	25.1	8,285	146.0	8,461	171.1	8,435	2.71	2.16	0.31	0.39	0.0004	0.0738
RUN 8	18:10	18:31	20.3	25.1	8,285	146.0	8,461	171.1	8,435	2.77	2.21	0.28	0.35	0.0004	0.0669
RUN 9	18:32	18:53	20.3	25.1	8,285	146.0	8,461	171.1	8,435	2.73	2.18	0.29	0.36	0.0004	0.0691
Average			**19.9**	**25.1**	**8,285**	**146**	**8,461**	**171.1**	**8,435**	**2.71**	**2.17**	**0.33**	**0.41**	**0.0005**	**0.0783**
Allowable								**254.0**						**0.0054**	**1.4000**

Figure 1. Oxygen and Volatile Organic Compounds Stack Gas Concentrations

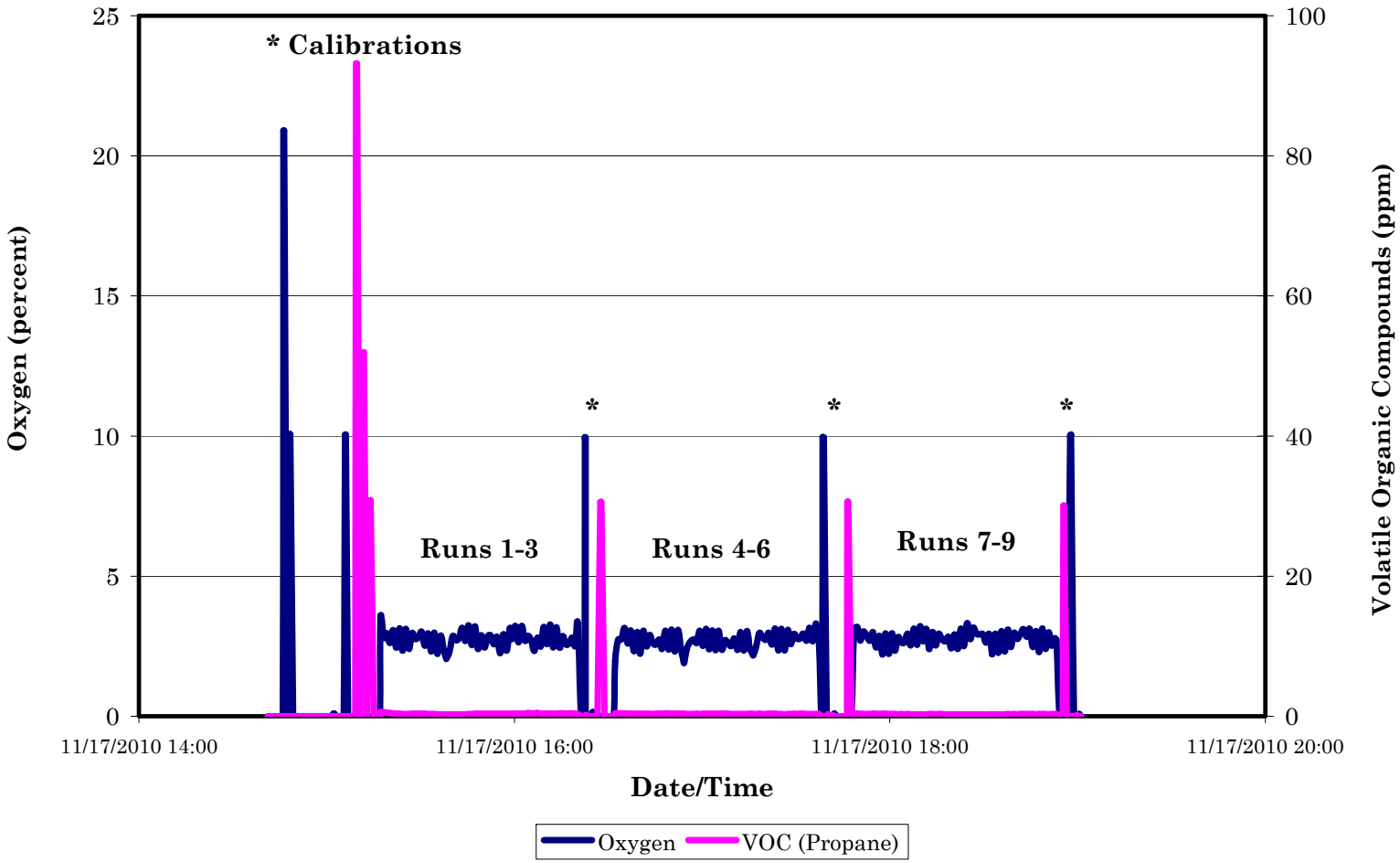

TABLE II. OXYGEN TESTING QUALITY ASSURANCE
HUNT REFINING
NO. 2 HYDROGEN PLANT REFORMER
Wednesday, November 17, 2010

Analyzer Calibration Data

INITIAL ANALYZER SPAN (Percent) =		21	ANALYZER ID.	OXYGEN
	CYLINDER VALUE Percent	ANALYZER RESPONSE (Percent)	DIFFERENCE (Percent)	DIFFERENCE % SPAN (ALLOWED 2%)
Zero Gas	0.00	0.00	0.0	0.0
High Range Gas	20.90	20.90	0.0	0.0
Mid Range Gas	10.03	10.05	0.0	-0.1

Test Results & Analyzer Calibration Bias and Drift Data

data & calculation entry						
START TIME OF RUN	STOP TIME OF RUN	RUN #	ANALYZER STACK GAS CONCENTRATION UNCORRECTED (Percent)	SYSTEM ZERO (Percent)	SYSTEM UPSCALE (Percent)	CYLINDER CONCENTRATION UPSCALE CALIBRATION GAS (Percent)
			INITIAL SYSTEM	0.06	10.04	
15:17	15:38	RUN 1	2.74	0.12	9.94	10.03
15:39	16:00	RUN 2	2.73	0.12	9.94	10.03
16:01	16:22	RUN 3	2.77	0.12	9.94	10.03
16:32	16:53	RUN 4	2.72	0.07	9.91	10.03
16:54	17:15	RUN 5	2.69	0.07	9.91	10.03
17:16	17:37	RUN 6	2.80	0.07	9.91	10.03
17:48	18:09	RUN 7	2.74	0.07	10.01	10.03
18:10	18:31	RUN 8	2.80	0.07	10.01	10.03
18:32	18:53	RUN 9	2.76	0.07	10.01	10.03

system zero bias & drift			system upscale bias & drift			test results	RUN #
INITIAL SYSTEM ZERO CAL. BIAS RESPONSE % SPAN (ALLOWED 5%)	FINAL SYSTEM ZERO CAL. BIAS RESPONSE % SPAN (ALLOWED 5%)	ZERO DRIFT % SPAN (ALLOWED 3%)	INITIAL SYSTEM UPSCALE CAL. BIAS RESPONSE % SPAN (ALLOWED 5%)	FINAL SYSTEM UPSCALE CAL. BIAS RESPONSE % SPAN (ALLOWED 5%)	UPSCALE DRIFT % SPAN (ALLOWED 3%)	OXYGEN CONCENTRATION (Percent-Dry)	
0.3	0.6	0.3	0.0	-0.5	-0.5	**2.7**	RUN 1
0.3	0.6	0.3	0.0	-0.5	-0.5	**2.7**	RUN 2
0.3	0.6	0.3	0.0	-0.5	-0.5	**2.7**	RUN 3
0.6	0.3	-0.2	-0.5	-0.7	-0.1	**2.7**	RUN 4
0.6	0.3	-0.2	-0.5	-0.7	-0.1	**2.6**	RUN 5
0.6	0.3	-0.2	-0.5	-0.7	-0.1	**2.8**	RUN 6
0.3	0.3	0.0	-0.7	-0.2	0.5	**2.7**	RUN 7
0.3	0.3	0.0	-0.7	-0.2	0.5	**2.8**	RUN 8
0.3	0.3	0.0	-0.7	-0.2	0.5	**2.7**	RUN 9

TABLE III. VOLATILE ORGANIC COMPOUNDS TESTING QUALITY ASSURANCE
HUNT REFINING
NO. 2 HYDROGEN PLANT REFORMER
Wednesday, November 17, 2010

Analyzer Calibration Data

INITIAL ANALYZER SPAN (%) =		100	ANALYZER ID.	VOC
	CYLINDER VALUE (ppm)	ANALYZER RESPONSE (ppm)	DIFFERENCE (ppm)	DIFFERENCE % VALUE (ALLOWED 5%)
Zero Gas	0.00	0.00	0.0	0.0
High Range Gas	93.20	93.20	0.0	0.0
Mid Range Gas	52.00	51.94	0.1	0.1
Low Range Gas	30.90	30.81	0.1	0.3

Test Results & Analyzer Calibration Bias and Drift Data

data & calculation entry						
START TIME OF RUN	STOP TIME OF RUN	RUN #	ANALYZER STACK GAS CONCENTRATION UNCORRECTED (PPM)	SYSTEM ZERO (PPM)	SYSTEM UPSCALE (PPM)	CYLINDER CONCENTRATION UPSCALE CALIBRATION GAS (PPM)
			INITIAL SYSTEM	0.11	30.83	
15:17	15:38	RUN 1	0.36	0.14	30.58	30.90
15:39	16:00	RUN 2	0.31	0.14	30.58	30.90
16:01	16:22	RUN 3	0.40	0.14	30.58	30.90
16:32	16:53	RUN 4	0.37	0.12	30.59	30.90
16:54	17:15	RUN 5	0.33	0.12	30.59	30.90
17:16	17:37	RUN 6	0.32	0.12	30.59	30.90
17:48	18:09	RUN 7	0.31	0.09	30.04	30.90
18:10	18:31	RUN 8	0.28	0.09	30.04	30.90
18:32	18:53	RUN 9	0.29	0.09	30.04	30.90

DRIFT		TEST RESULTS	RUN #
ZERO DRIFT % SPAN (ALLOWED 3%)	UPSCALE DRIFT % SPAN (ALLOWED 3%)	VOLATILE ORGANIC COMPOUNDS CONCENTRATION (PPM-WET)	
0.1	-0.3	**0.36**	RUN 1
0.1	-0.3	**0.31**	RUN 2
0.1	-0.3	**0.40**	RUN 3
0.1	-0.3	**0.37**	RUN 4
0.1	-0.3	**0.33**	RUN 5
0.1	-0.3	**0.32**	RUN 6
0.1	-0.9	**0.31**	RUN 7
0.1	-0.9	**0.28**	RUN 8
0.1	-0.9	**0.29**	RUN 9

TABLE IV. MOISTURE TEST RESULTS
HUNT REFINING
NO. 2 HYDROGEN PLANT REFORMER
Wednesday, November 17, 2010

Title of Run		**RUN 1**	**RUN 2**	**RUN 3**
Date	Month/Day/Year	11/17/2010	11/17/2010	11/17/2010
Sampling Time -Start	Military	1517	1632	1748
Sampling Time -Stop	Military	1617	1732	1848
Stack Static Pressure	Inches Water	-0.70	-0.70	-0.70
Barometric Pressure	Inches Mercury	30.15	30.15	30.15
Standard Orifice Pressure ΔH@	Inches Water	2.001	2.001	2.001
Meter Correction Factor	dimensionless	0.974	0.974	0.974
Oxygen Concentration	Mole Percent O2	2.69	2.70	2.73
Carbon Dioxide Concentration	Mole Percent CO2	16.0	16.0	16.0
Volume of Gas Metered	Actual Cubic Feet	38.795	38.301	38.361
Volume of Water Collected	Milliliters	200.6	198.5	206.5
Sampling Time	Minutes	60	60	60
Area of Stack	Square Feet	23.044	23.044	23.044
Average Orifice Pressure (ΔH)	Inches Water	1.5	1.5	1.5
Average Stack Temperature	Degrees F	325	325	325
Average Meter Temperature	Degrees F	68	66	61

Calculations

Standard Temperature (° F) =	68	**RUN 1**	**RUN 2**	**RUN 3**	**AVERAGE**
Standard Pressure (inches of Hg) =	29.92				
Volume of Gas Sampled	Standard Dry Cubic Feet	38.227	37.879	38.280	38.128
Molecular Wt. of Stack Gas (dry)	LB/LB-MOLE	30.67	30.67	30.67	30.67
Water vapor in Stack Gas	Percent	19.8	19.8	20.3	19.9
Post Test Meter Correction Check	dimensionless	0.97	0.98	0.98	0.98
Percent Difference	Allowed 5% Average	-0.3	0.8	0.2	0.3

TABLE V. OXYGEN RELATIVE ACCURACY TEST AUDIT
HUNT REFINING
NO. 2 HYDROGEN PLANT REFORMER
Thursday, November 18, 2010

USE	RUN	START TIME Military	STOP TIME Military	*Reference Method* Oxygen (Dry) (measured) (Percent)	*Pollutant Monitor* Oxygen (Dry) (measured) (Percent)	Difference
Y	RUN 1	14:00	14:21	2.61	2.74	-0.1280
Y	RUN 2	14:22	14:43	2.62	2.79	-0.1630
Y	RUN 3	14:44	15:05	2.63	2.77	-0.1350
Y	RUN 4	15:11	15:32	2.59	2.65	-0.0520
Y	RUN 5	15:33	15:54	2.66	2.80	-0.1500
Y	RUN 6	15:55	16:16	2.52	2.66	-0.1360
Y	RUN 7	16:29	16:50	2.72	2.91	-0.1900
Y	RUN 8	16:51	17:12	2.61	2.64	-0.0300
Y	RUN 9	17:13	17:34	2.60	2.79	-0.1850

$$\text{Average Difference} = \bar{d} = \frac{1}{N}\sum_{i=1}^{N} d_i = \text{-0.130}$$

$$\text{Reference Method Average} = \overline{\text{RM}} = \frac{1}{N}\sum_{i=1}^{N} RM_i = \text{2.619}$$

$$\text{Pollutant Monitor Average} = \text{PR}_{\text{ave}} = \frac{1}{N}\sum_{i=1}^{N} \text{PR}_i = \text{2.748}$$

$$\text{Standard Deviation} = S_d = \sqrt{\frac{1}{N-1}\left\{\sum_{i=1}^{n} d_i^{\,2} - n\bar{d}^{\,2}\right\}} = \text{0.055}$$

$$\text{Confidence Coefficient} = |cc| = t_{0.975}\frac{s_d}{\sqrt{N}} = \text{0.042}$$

$$\text{Relative Accuracy} = \frac{|\bar{d}| + |cc|}{\overline{\text{RM}}.} \times 100 = \text{6.576}$$

Allowable = 20.000

TABLE VI. NITROGEN OXIDES RELATIVE ACCURACY TEST AUDIT
HUNT REFINING
NO. 2 HYDROGEN PLANT REFORMER
Thursday, November 18, 2010

USE	RUN	START TIME Military	STOP TIME Military	*Reference Method* Nitrogen Emissions Emissions (ppm-dry)	*Pollutant Monitor* Nitrogen Emissions Emissions (ppm-dry)	Difference
Y	RUN 1	14:00	14:21	14.20	12.60	1.5950
Y	RUN 2	14:22	14:43	14.01	12.60	1.4080
Y	RUN 3	14:44	15:05	13.95	12.60	1.3430
Y	RUN 4	15:11	15:32	13.99	12.90	1.0900
Y	RUN 5	15:33	15:54	13.88	12.71	1.1740
Y	RUN 6	15:55	16:16	13.95	12.91	1.0400
Y	RUN 7	16:29	16:50	14.20	13.17	1.0230
Y	RUN 8	16:51	17:12	14.17	13.01	1.1550
Y	RUN 9	17:13	17:34	14.16	12.97	1.1900

$$\text{Average Difference} = \bar{d} = \frac{1}{N}\sum_{i=1}^{N} d_i = 1.224$$

$$\text{Reference Method Average} = \overline{\text{RM}} = \frac{1}{N}\sum_{i=1}^{N} RM_i = 14.055$$

$$\text{Pollutant Monitor Average} = \text{PR}_{\text{ave}} = \frac{1}{N}\sum_{i=1}^{N} \text{PR}_i = 12.831$$

$$\text{Standard Deviation} = S_d = \sqrt{\frac{1}{N-1}\left\{\sum_{i=1}^{n} d_i^{\,2} - n\bar{d}^{\,2}\right\}} = 0.189$$

$$\text{Confidence Coefficient} = |cc| = t_{0.975}\frac{s_d}{\sqrt{N}} = 0.145$$

$$\text{Relative Accuracy} = \frac{|\bar{d}| + |cc|}{\overline{\text{RM}}.} \times 100 = 9.745$$

Allowable = 20.000

TABLE VII. OXYGEN AND NITROGEN OXIDES EMISSIONS TEST RESULTS
HUNT REFINING
NO. 2 HYDROGEN PLANT REFORMER
Thursday, November 18, 2010

TEST	Start Time Military	Stop Time Military	Fuel Gas Heat Input (measured) (MMbtu/Hour)	Fuel Gas F Factor Oxygen (Dry) (SDCF/MMbtu)	PSA Off Gas Heat Input (measured) (MMbtu/Hour)	PSA Off Gas F Factor Oxygen (Dry) (SDCF/MMbtu)	Total Heat Input (measured) (MMbtu/Hour)	Average F Factor Oxygen (Dry) (SDCF/MMbtu)	Oxygen (Dry) (measured) (Percent)	Nitrogen Oxides Emissions (ppm-dry)	Nitrogen Oxides Emissions (O2 F factor) (Lbs/MMbtu)	Nitrogen Oxides Emissions (Lbs/hour O2 F Factor)
RUN 1	14:00	14:21	40.4	8,332	142.8	8,557	183	8,507.4	2.61	14.20	0.016	3.02
RUN 2	14:22	14:43	40.4	8,332	142.8	8,557	183	8,507.4	2.62	14.01	0.016	2.98
RUN 3	14:44	15:05	40.4	8,332	142.8	8,557	183	8,507.4	2.63	13.95	0.016	2.97
RUN 4	15:11	15:32	40.4	8,332	142.8	8,557	183	8,507.4	2.59	13.99	0.016	2.97
RUN 5	15:33	15:54	40.4	8,332	142.8	8,557	183	8,507.4	2.66	13.88	0.016	2.96
RUN 6	15:55	16:16	40.4	8,332	142.8	8,557	183	8,507.4	2.52	13.95	0.016	2.95
RUN 7	16:29	16:50	40.4	8,332	142.8	8,557	183	8,507.4	2.72	14.20	0.017	3.04
RUN 8	16:51	17:12	40.4	8,332	142.8	8,557	183	8,507.4	2.61	14.17	0.016	3.01
RUN 9	17:13	17:34	40.4	8,332	142.8	8,557	183	8,507.4	2.60	14.16	0.016	3.01
Average			**40.4**	**8,332**	**142.8**	**8,557**	**183**	**8,507**	**2.62**	**14.06**	**0.016**	**2.99**
Allowable							**254**				**0.035**	**8.9**

Figure 2. Oxygen and Nitrogen Oxides Stack Gas Concentrations

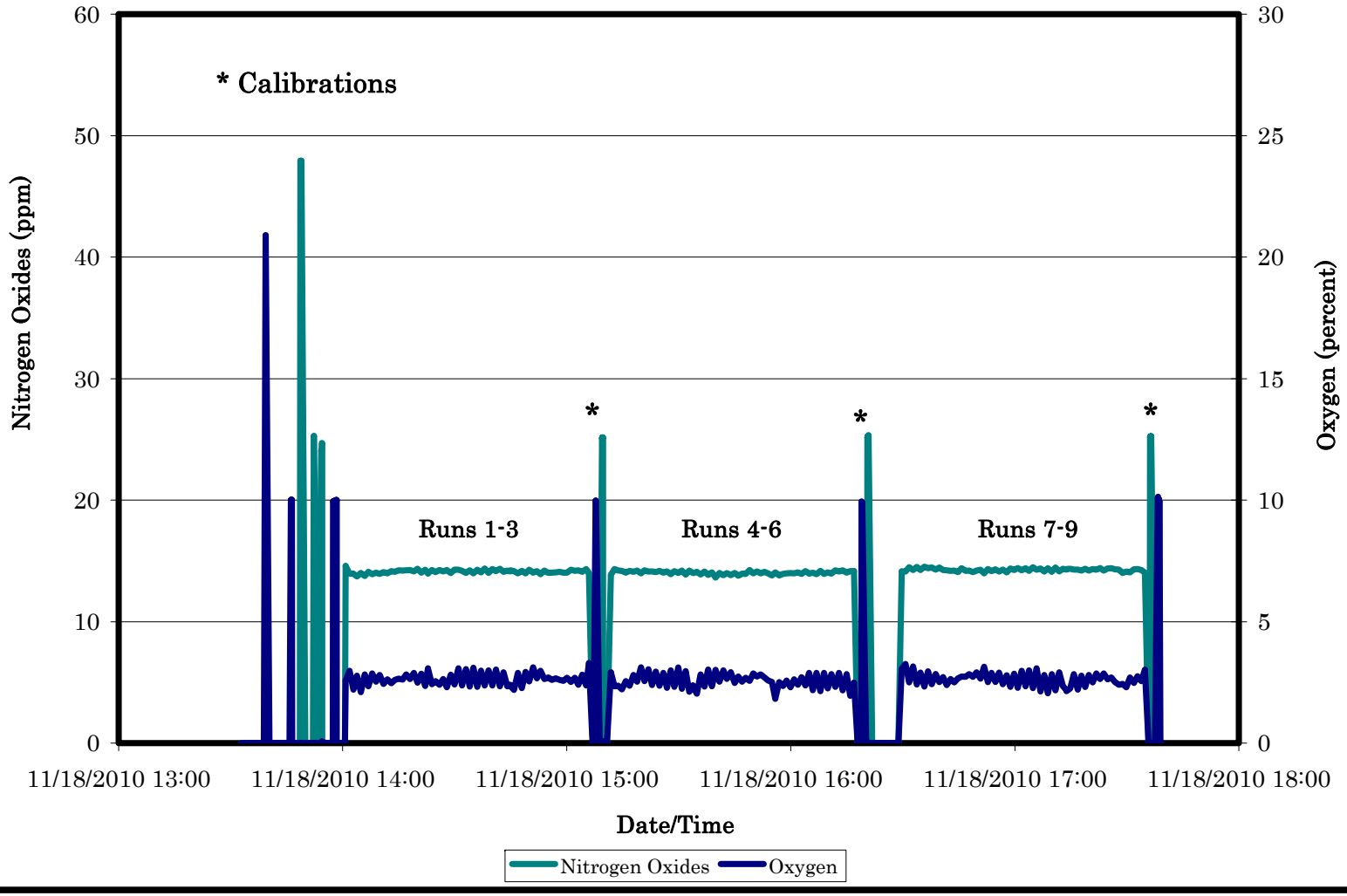

TABLE VIII. OXYGEN TESTING QUALITY ASSURANCE
HUNT REFINING
NO. 2 HYDROGEN PLANT REFORMER
Thursday, November 18, 2010

Analyzer Calibration Data

INITIAL ANALYZER SPAN (Percent) =		21	ANALYZER ID.	OXYGEN
	CYLINDER VALUE Percent	ANALYZER RESPONSE (Percent)	DIFFERENCE (Percent)	DIFFERENCE % SPAN (ALLOWED 2%)
Zero Gas	0.00	0.00	0.0	0.0
High Range Gas	20.90	20.90	0.0	0.0
Mid Range Gas	10.03	10.00	0.0	0.1

Test Results & Analyzer Calibration Bias and Drift Data

data & calculation entry						
START TIME OF RUN	STOP TIME OF RUN	RUN #	ANALYZER STACK GAS CONCENTRATION UNCORRECTED (Percent)	SYSTEM ZERO (Percent)	SYSTEM UPSCALE (Percent)	CYLINDER CONCENTRATION UPSCALE CALIBRATION GAS (Percent)
			INITIAL SYSTEM	0.02	10.00	
14:00	14:21	RUN 1	2.62	0.04	9.98	10.03
14:22	14:43	RUN 2	2.64	0.04	9.98	10.03
14:44	15:05	RUN 3	2.65	0.04	9.98	10.03
15:11	15:32	RUN 4	2.60	0.04	9.90	10.03
15:33	15:54	RUN 5	2.65	0.04	9.90	10.03
15:55	16:16	RUN 6	2.52	0.04	9.90	10.03
16:29	16:50	RUN 7	2.71	0.02	9.93	10.03
16:51	17:12	RUN 8	2.60	0.02	9.93	10.03
17:13	17:34	RUN 9	2.59	0.02	9.93	10.03

system zero bias & drift			system upscale bias & drift			test results	RUN #
INITIAL SYSTEM ZERO CAL. BIAS RESPONSE % SPAN (ALLOWED 5%)	FINAL SYSTEM ZERO CAL. BIAS RESPONSE % SPAN (ALLOWED 5%)	ZERO DRIFT % SPAN (ALLOWED 3%)	INITIAL SYSTEM UPSCALE CAL. BIAS RESPONSE % SPAN (ALLOWED 5%)	FINAL SYSTEM UPSCALE CAL. BIAS RESPONSE % SPAN (ALLOWED 5%)	UPSCALE DRIFT % SPAN (ALLOWED 3%)	OXYGEN CONCENTRATION (Percent-Dry)	
0.1	0.2	0.1	0.0	-0.1	-0.1	**2.6**	RUN 1
0.2	0.2	0.0	-0.1	-0.1	0.0	**2.6**	RUN 2
0.2	0.2	0.0	-0.1	-0.1	0.0	**2.6**	RUN 3
0.2	0.2	0.0	-0.1	-0.5	-0.4	**2.6**	RUN 4
0.2	0.2	0.0	-0.5	-0.5	0.0	**2.7**	RUN 5
0.2	0.2	0.0	-0.5	-0.5	0.0	**2.5**	RUN 6
0.2	0.1	-0.1	-0.5	-0.3	0.1	**2.7**	RUN 7
0.1	0.1	0.0	-0.3	-0.3	0.0	**2.6**	RUN 8
0.1	0.1	0.0	-0.3	-0.3	0.0	**2.6**	RUN 9

TABLE IX. NITROGEN OXIDES TESTING QUALITY ASSURANCE
HUNT REFINING
NO. 2 HYDROGEN PLANT REFORMER
Thursday, November 18, 2010

Analyzer Calibration Data

INITIAL ANALYZER SPAN (PPM) =	48	ANALYZER ID.	NITROGEN OXIDES
	CYLINDER VALUE PPM	ANALYZER RESPONSE (PPM)	DIFFERENCE (PPM)	DIFFERENCE % SPAN (ALLOWED 2%)
Zero Gas	0.00	0.00	0.0	0.0
High Range Gas	47.93	47.93	0.0	0.0
Mid Range Gas	25.14	25.27	-0.1	-0.3
Nox Converter Efficiency Check Gas	47.90	45.11	Efficiency	94.2

Test Results & Analyzer Calibration Bias and Drift Data

data & calculation entry						
START TIME OF RUN	STOP TIME OF RUN	RUN #	ANALYZER STACK GAS CONCENTRATION UNCORRECTED (PPM)	SYSTEM ZERO (PPM)	SYSTEM UPSCALE (PPM)	CYLINDER CONCENTRATION UPSCALE CALIBRATION GAS (PPM)
			INITIAL SYSTEM	0.00	24.38	
14:00	14:21	RUN 1	14.06	0.39	25.12	25.14
14:22	14:43	RUN 2	14.17	0.39	25.12	25.14
14:44	15:05	RUN 3	14.11	0.39	25.12	25.14
15:11	15:32	RUN 4	14.10	0.05	25.22	25.14
15:33	15:54	RUN 5	13.95	0.05	25.22	25.14
15:55	16:16	RUN 6	14.02	0.05	25.22	25.14
16:29	16:50	RUN 7	14.28	0.13	25.22	25.14
16:51	17:12	RUN 8	14.27	0.13	25.22	25.14
17:13	17:34	RUN 9	14.26	0.13	25.22	25.14

system zero bias & drift			system upscale bias & drift			test results	RUN #
INITIAL SYSTEM ZERO CAL. BIAS RESPONSE % SPAN (ALLOWED 5%)	FINAL SYSTEM ZERO CAL. BIAS RESPONSE % SPAN (ALLOWED 5%)	ZERO DRIFT % SPAN (ALLOWED 3%)	INITIAL SYSTEM UPSCALE CAL. BIAS RESPONSE % SPAN (ALLOWED 5%)	FINAL SYSTEM UPSCALE CAL. BIAS RESPONSE % SPAN (ALLOWED 5%)	UPSCALE DRIFT % SPAN (ALLOWED 3%)	NITROGEN DIOXIDE CONCENTRATION (PPM-Dry)	
0.0	0.8	0.8	-1.9	-0.3	1.5	**14.2**	RUN 1
0.8	0.8	0.0	-0.3	-0.3	0.0	**14.0**	RUN 2
0.8	0.8	0.0	-0.3	-0.3	0.0	**13.9**	RUN 3
0.8	0.1	-0.7	-0.3	-0.1	0.2	**14.0**	RUN 4
0.1	0.1	0.0	-0.1	-0.1	0.0	**13.9**	RUN 5
0.1	0.1	0.0	-0.1	-0.1	0.0	**14.0**	RUN 6
0.1	0.3	0.2	-0.1	-0.1	0.0	**14.2**	RUN 7
0.3	0.3	0.0	-0.1	-0.1	0.0	**14.2**	RUN 8
0.3	0.3	0.0	-0.1	-0.1	0.0	**14.2**	RUN 9

4. PROCESS DESCRIPTION

The process consists of indirect heaters firing refinery fuel gas and PSA Offgas. An analysis of the fuel gas is included in Appendix E. By use of EPA Method 19, an oxygen F factor was calculated. The weighted average refinery fuel gas and PSA Offgas F factor was calculated to be 8435 standard dry cubic feet per million Btu on November 17, 2010 and 8507 standard dry cubic feet per million Btu on November 18, 2010. The test ports were located after the combustion zone before exit to the atmosphere.

5. SAMPLE POINT LOCATION

The sample point locations and outlet duct schematic for the Hunt Refining, No. 2 Hydrogen Plant Reformer are located in the exhaust stream after the combustion zone and before discharge to the atmosphere.

6. MOISTURE SAMPLING PROCEDURE (EPA Method 4)

The sampling procedure utilized is that specified in **40 CFR, Part 60, Appendix A, Methods 4**. A brief description of this procedure is as follows:

The first two impingers were partially filled with 100 milliliters of deionized (type 3) water. The next impinger was left empty to act as a moisture trap. Preweighed 6 to 16-mesh indication silica gel was added to the last impinger. The sampling equipment, manufactured by Lear Siegler (Model 100) or Sanders Engineering (Model 200), was assembled as shown in the attached drawing. The system was leak checked by plugging the inlet to the probe and pulling a 15-inch mercury vacuum. A leakage rate not in excess of 0.02 cubic feet per minute is considered acceptable.

Figure 3. Moisture Sampling Train

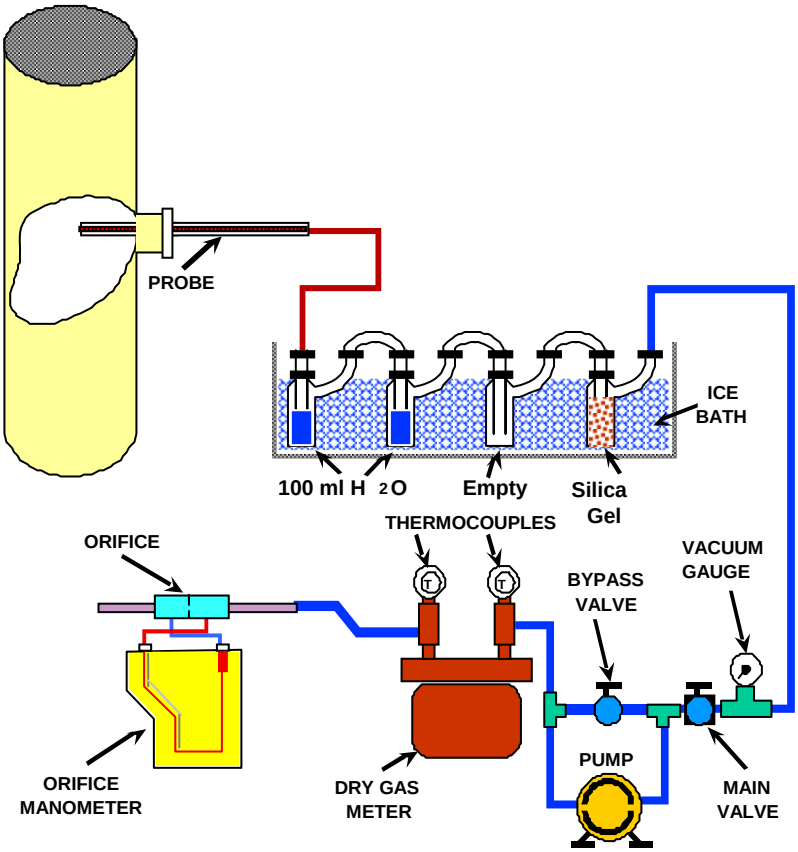

Crushed ice was placed around the impingers. The probe was placed in the center of the stack. The pump was started and the flow adjusted to approximately 0.75 cubic feet per minute sampling rate or a delta H of 1.5 inches of water. Stack temperature, meter temperature, and delta H readings were taken periodically and

recorded on the field data sheet. At the conclusion of each run the pump was turned off, final readings recorded, and final system leak checks were performed.

Care was exercised in moving the collection train to the sample recovery area to minimize the loss or gain of extraneous material. The volume of water in the impingers was measured, and the silica gel impinger weighed and recorded on the field data sheet.

7. OXYGEN AND NITROGEN OXIDES SAMPLING PROCEDURE (EPA Methods 3a and 7e)

The sampling procedures utilized are those specified in **40 CFR, Part 60, Appendix A, Methods 3a and 7e** as modified by the governing regulatory agency. A brief description of these procedures is as follows:

Figure 4. Oxygen and Nitrogen Oxides Sampling Train

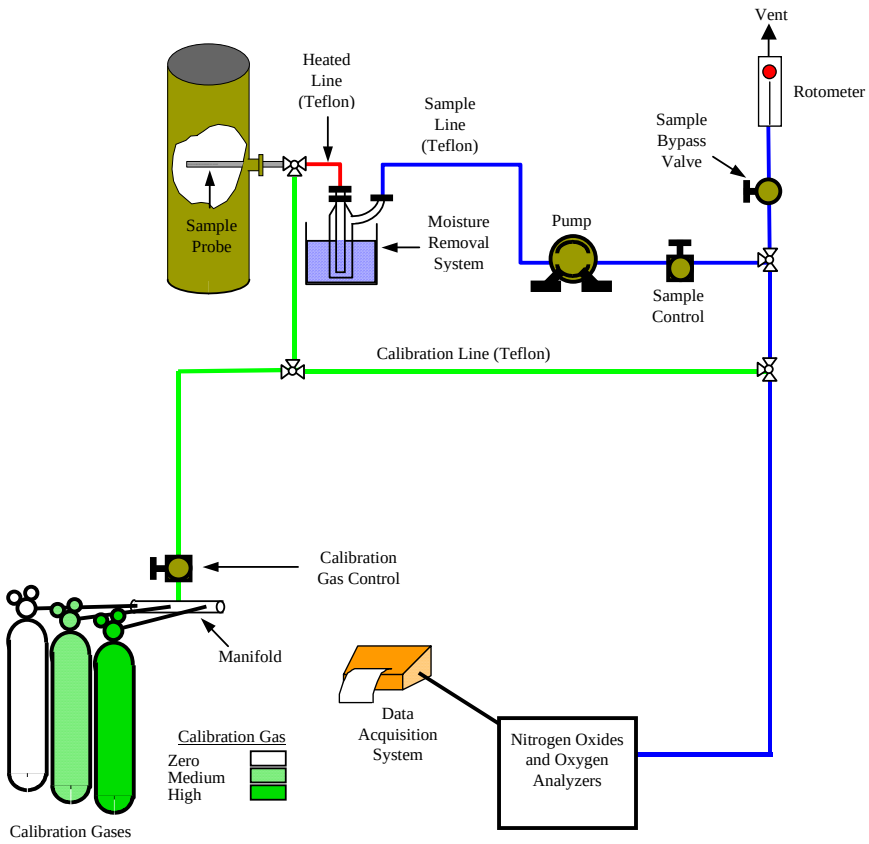

The sample was removed from the stack through a stainless steel probe and passed through a three-way valve and condenser moisture removal system. Teflon line was used to transport the sample through a transport pump and a flow control valve. From this point the sample was routed into a manifold with a bypass valve, then to an analyzer sample flow control valve and on to an analyzer specific for the pollutant of interest. Each analyzer produced a voltage analog output proportional to the concentration of pollutant present in the gas. A schematic of the sampling train is presented in the attached drawing.

Each instrument was allowed to warm up for at least 30 minutes before it was initially calibrated. Zero air was introduced directly to each instrument to

establish a baseline and check the zero reading of the instrument. A high range calibration gas was introduced directly to each instrument. The instrument was allowed to fully respond to the calibration gas. Each analyzer was adjusted, if needed, to the correct value. A linear calibration curve was calculated from this data and stored on computer. Next, a mid-range calibration gas was introduced directly to each instrument. The percent error between each measured value and the corresponding calibration value was calculated. If any of the readings indicated a difference of more than ±2% of the span, the analyzer was recalibrated.

The high or mid gas and zero gas were then introduced to the system at the three-way valve before the condenser. The response value for each of these gases was recorded. If these measured values differed significantly from the calibration values the sampling system was checked and repaired until the system check met EPA specifications.

To begin sampling, the three-way valve was switched to allow the instrument to sample the stack gas. Twice the system response time was allowed to elapse before the data recorder was marked for the beginning of the run. After the required sampling time, the data recorder was marked for the end of the run. At the end of each run the three-way valve was switched to allow introduction of the zero and calibration gas to the system. From this data the calibration bias and drift were calculated. If the bias values were greater than ±5% of the span, or the drift was greater than 3%of span the run was invalidated. To begin the next run the three-way valve was switched to allow sampling of the stack gas, and the next run was started. This procedure was repeated until all runs were complete.

7.1. Sample Recovery & Analysis

After the tests were completed, the data was reduced to give an average concentration in parts per million for each run. This average concentration was then corrected for the analyzer zero and span bias and drift using the equation:

$$C\ gas = \frac{(C - Co)\quad Cma}{(Cm - Co)}$$

Where:

C gas = Effluent gas concentration, dry basis, ppm.

C = Average gas concentration indicated by the gas analyzer, dry basis, ppm.

Co = Average of initial and final system calibration responses for the zero gas, ppm.

Cm = Average of initial and final calibration responses for the upscale calibration gas, ppm.

Cma = Actual concentration of the scale calibration gas, ppm.

8. VOLATILE ORGANIC COMPOUND SAMPLING PROCEDURE (Method 25a)

Volatile organic compounds analysis was performed per **40 CFR, Part 60, Appendix A, Method 25a**.

The sample was drawn through a stainless steel probe and then through a three-way calibration valve. Heated Teflon line is utilized to transport the sample through a water knockout and a filter, through a pump into a sample flow control valve, into a manifold with a bypass valve, to an analyzer sample flow control valve, and a volatile organic compounds flame ionization analyzer. The sample train is presented in the attached figure.

Figure 5. Volatile Organic Compounds Sampling Train

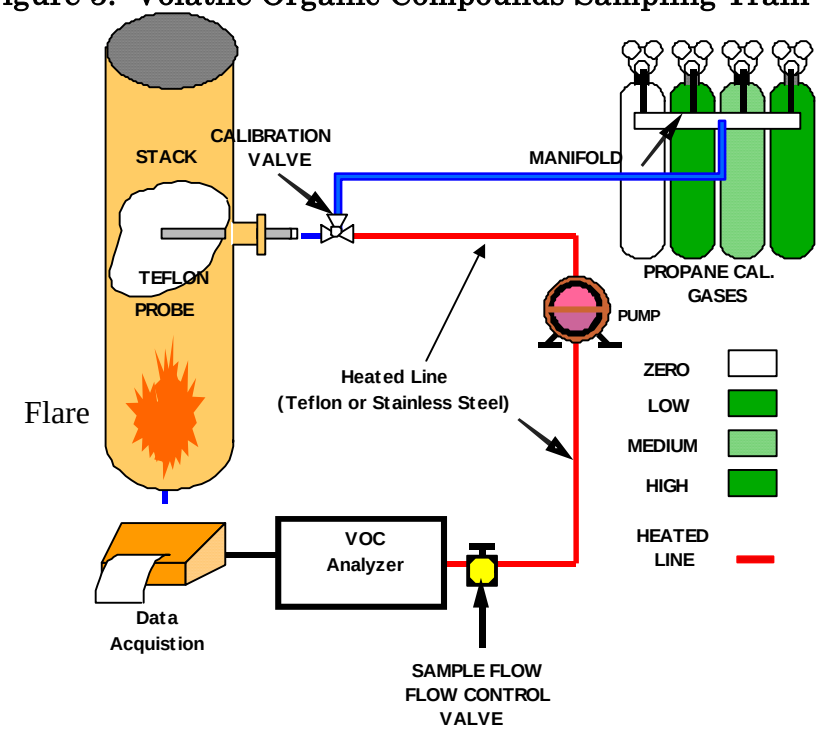

The instrument was allowed to warm up for at least 30 minutes before it was initially calibrated. A high range calibration gas was introduced to the instrument at the three-way valve. The instrument was allowed to fully respond to the calibration gas and the analyzer was adjusted to the correct value. Zero air was used as zero gas to check the zero reading of the instrument and was adjusted to the correct value. Next, the middle and low gases were introduced to the system at the three-way valve. The response value for each of these gases was recorded. If any of the readings indicated a difference of more

than ±5 percent of the span the analyzer was recalibrated.

To begin sampling the three-way valve was switched to allow the instrument to sample the stack gas. Twice the system response time was allowed to elapse before the chart was marked for the beginning of the test. At the end of each test the three-way valve was switched to allow introduction of the calibration gas closest in value to the stack gas concentration. Zero air was introduced to the system. The zero and calibration drift were recorded. If the drift values were greater than ±3 percent of the span the test was invalidated and a new test was performed following corrections to the measurement system. Alternatively, the test measurement system was recalibrated and the results were reported using both sets of calibration data.

8.1. Sample Recovery & Analysis

After the tests are completed the data is reduced to give an average volatile organic compound concentration in parts per million.

9. QUALITY ASSURANCE

In order to ensure the accuracy of all the data collected in the field and at the laboratory, SEAS has instituted a comprehensive quality assurance and quality control program. New or repaired items requiring calibration are calibrated before their initial use in the field. Equipment with calibration that may change with use is calibrated before and after each use. When an item is found to be out of calibration, the unit is either discarded or repaired and then recalibrated before being returned to service. All equipment is periodically recalibrated in full regardless of the results of the regular inspections or its present calibration status. Calibrations are performed in a manner consistent with the EPA reference methods recommended in the "Quality Assurance Handbook for Air Pollution Measurement Systems" published by the U.S. Environmental Protection Agency. To the maximum degree possible all calibrations are traceable to the National Institute of Standards (NIST).

In order to ensure that a test will be performed in a timely manner without undue delays, SEAS sampling vans are equipped with duplicate sampling devices for almost every device needed to perform that test. If a particular device is broken or does not pass inspection, a second device is available immediately at the site for use. Any device that appears to be outside calibration or in need of repair is tagged in the field and repaired, calibrated, or discarded immediately upon return to the laboratory.

9.1. CALIBRATIONS

Certain pieces of equipment need to be calibrated before and after each test. Those items include the pitot tubes, the differential pressure gauges, the dry gas meter, and the nozzles used for the particulate testing. The following is a brief description of the calibration procedures for each of these important devices.

9.1.1. PITOT TUBES

All pitot tubes are the S-type as required by EPA Reference Method 2 (40 CFR, Part 60, Appendix A, Method 2). This method contains certain geometric standards for the construction of S-type pitot tubes. All SEAS pitot tubes are constructed according to these standards. According to the EPA, any pitot tube constructed to these standards will have a coefficient of 0.84 $\pm$ 0.02. To ensure the exact value of SEAS pitot tubes, all pitot tubes are initially calibrated in SEAS' wind tunnel to determine the exact pitot coefficient. This coefficient should not change unless the pitot is physically damaged. Each pitot tube is checked before going to the field to make sure it meets the geometry as specified. Any pitot tube that does not meet the specifications is not used in the test.

9.1.2. DIFFERENTIAL PRESSURE GAUGES

SEAS uses several different types of pressure gauges, including oil tube manometers, water tube manometers, magnehelics, and current output electronic load cells. Each of these devices is inspected before being taken to the field, and is inspected for leaks during each test. The magnehelics and load cells are tested against an incline manometer water gauge to ensure accuracy.

9.1.3. TEMPERATURE SENSORS

All temperature sensors used in SEAS' sampling program are either mercury in-glass thermometers or type K thermocouples. These thermocouples are physical devices that produce a voltage proportional to the temperature. The thermocouple reading device is calibrated before and after each series of tests to ensure accuracy of ± 2 percent. The calibration of the thermocouple is accomplished by NIST traceable calibrated reference thermocouple potentiometer system.

9.1.4. NOZZLES

The inside diameter of each nozzle is measured to the nearest 0.001 inches prior to its initial use. Upon arriving in the field each nozzle is again measured with a micrometer on three different points on the diameter to ensure its original measurement and that the nozzle is perfectly round. If the difference between the maximum and minimum diameters measured does not exceed 0.003 inches, the nozzle is acceptable; otherwise, this nozzle is discarded and another is selected. At the end of each test the nozzles are again remeasured on three different points on the diameter to ensure that during the test the nozzle has not become dented or deformed.

9.1.5. DRY GAS METER

The dry gas meter is initially calibrated against a spirometer transfer standard. During the initial calibration, a five point calibration curve is made at a minimum of one-half inch water column orifice pressure up to four inches water column orifice pressure. After each test, the dry gas meter calibration factor is checked by performing three repetitions at a representative flow rate experienced during the test. If the final calibration does not agree with the initial calibration

within five percent the calibration which yields the lowest volume of sample pulled is used in the calculations. The dry gas meter is repaired and a new five initial five point calibration is performed.

9.1.6. ORIFICE

The flow meter orifice is used to establish isokinetic sampling rates during the test. The orifice is calibrated with the dry gas meter at the same time under the same conditions. The orifice is calibrated over a wide range of flow rates, and the arithmetic mean of the orifice calibration is used for sampling purposes. The orifice is recalibrated every time the gas meter is recertified.

APPENDIX A QUALITY CONTROL OF TESTING EQUIPMENT

INITIAL METER BOX CALIBRATION

Calibrated By: JEJ **BOX #:** S-102 **Date:** 9/22/2008

			Orifice #:	1	Orifice #:	3	Orifice #:	8
		Unit	RUN 1	RUN 2	RUN 1	RUN 2	RUN 1	RUN 2
Meter	DH	In. H_2O	0.73	0.73	1.20	1.20	1.70	1.70
	Initial Gas Volume	$Ft.^3$	768.200	799.500	754.900	761.400	743.500	748.800
	Final Gas Volume	$Ft.^3$	799.200	805.300	761.200	767.700	748.600	753.900
	Initial Temp. Out	°F	75	74	75	75	74	75
	Final Temp. Out	°F	74	75	75	75	75	75
	Vacuum	In. Hg	20.0	20.0	18.0	18.0	17.0	17.0
	Ambient Temp.	°F	74	72	73	75	72	73
	Barometric Pressure	In. Hg	30.15	30.15	30.15	30.15	30.15	30.15
	Time	sec	4003	747	634	634	427	428
	K'		0.3499	0.3499	0.4443	0.4443	0.5237	0.5237
CALCULATIONS								
	Total Meter Gas Volume	Actual $Ft.^3$	31.000	5.800	6.300	6.300	5.100	5.100
	Time	Minutes	66.717	12.450	10.567	10.567	7.117	7.133
	Volume through the Meter	*SDCF without Y*	30.901	5.781	6.281	6.281	5.096	5.091
	Volume through the Orifice	*SDCF*	30.458	5.694	6.131	6.120	4.872	4.879
	Calculated Y	*Dimensionless*	**0.986**	**0.985**	**0.976**	**0.974**	**0.956**	**0.958**
	Difference	*Allowable 0.02*	0.012	0.011	0.002	0.001	-0.018	-0.015
	Calculated DH@		**1.968**	**1.961**	**2.006**	**2.013**	**2.048**	**2.050**
	Difference	*Allowable 0.2*	-0.033	-0.040	0.005	0.012	0.047	0.049

Reference	33103	Unit	RUN 4	RUN 5	
Field Meter	DH	In. H_2O	3.40	3.28	
	Initial Gas Volume	$Ft.^3$	807.000	813.800	
	Final Gas Volume	$Ft.^3$	813.215	819.200	
	Initial Temp. Out	°F	75	75	
	Final Temp. Out	°F	75	75	
Reference Meter	Y	*Dimensionless*	0.952	0.952	
	Initial Gas Volume	$Ft.^3$	467.650	474.370	
	Final Gas Volume	$Ft.^3$	473.793	479.670	
	Initial Temp.	°F	75	75	
	Final Temp.	°F	75	75	
	Barometric Pressure	In. Hg	30.15	30.150	
	Time	sec	366	330	
Volume Field Meter		ACF	6.22	5.400	
Volume Field Meter		SDCF	6.230	5.411	
Volume Reference Meter		ACF	6.14	5.300	
Volume Reference Meter		SDCF	6.107	5.269	
			0.980	0.974	**0.974**
			0.007	0.000	
			1.929	2.032	**2.001**
			-0.072	0.031	

Magnehelic Calibrations

Device	Calibration	Delta P	
	Standard	Magnehelic	
Units	inches water	inches water	*Percent*
Reading	Reference	Sample	*Error*
1	1.79	1.85	*3.4*
2	0.92	0.96	*4.3*
3	0.44	0.46	*4.5*

Allowed Error = 5% of Reading

Thermocouple Calibrations

Device	Calibration	Thermocouple	
	Standard	Detector	
Units	Degrees F.	Degrees F.	*Percent*
Reading	Reference	Sample	*Error*
1	750	758	*0.7*
2	400	405	*0.6*
3	100	103	*0.5*

Allowed Error = 1.5% of Absolute Temperature (Degrees Rankin);
Absolute Temperature = Temperature in Degrees Fahrenheit. + 460

Magnehelic Calibration

serial number	101			102A			102C			103A		
Span (in H2O)	**0.25**	**2**	**25**	**0.25**	**2**	**25**	**0.25**	**2**	**25**	**0.25**	**2**	**10**
Reference Reading @ 0% Span (in H2O)	0.000	0.00	0.00	0.00	0.00	0.00	0.00	0.00	0.00	0.00	0.00	0.00
Device Reading (in H2O)	0.000	0.00	0.00	0.00	0.00	0.00	0.00	0.00	0.00	0.00	0.00	0.00
% Difference (Allowed = 0.05)	0.00	0.00	0.00	0.00	0.00	0.00	0.00	0.00	0.00	0.00	0.00	0.00
Reference Reading @ 50% Span (in H2O)	0.120	0.95	4.73	0.125	1.00	9.64	0.131	0.90	9.30	0.12	0.95	5.15
Device Reading (in H2O)	0.122	0.96	4.90	0.126	0.98	9.75	0.129	0.88	9.00	0.12	0.92	5.20
% Difference (Allowed = 0.05)	1.67	1.05	3.59	0.80	2.00	1.14	1.53	2.22	3.23	2.56	3.16	0.97
Reference Reading @ 90% Span (in H2O)	0.220	1.88	23.50	2.32	1.85	23.30	0.250	2.00	22.80	0.248	1.91	9.50
Device Reading (in H2O)	0.222	1.83	24.20	2.300	1.90	24.00	0.243	1.97	23.30	0.240	1.95	9.20
% Difference (Allowed = 0.05)	0.91	2.66	2.98	0.86	2.70	3.00	2.80	1.50	2.19	3.23	2.09	3.16

serial number	103B						104		
Span (in H2O)	**0.25**	**0.5**	**1**	**2**	**5**	**25**	**0.25**	**2**	**10**
Reference Reading @ 0% Span (in H2O)	0.000	0.000	0.000	0.00	0.00	0.00	0.000	0.00	0.00
Device Reading (in H2O)	0.000	0.000	0.000	0.00	0.00	0.00	0.000	0.00	0.00
% Difference (Allowed = 0.05)	0.000	0.00	0.00	0.00	0.00	0.00	0.000	0.00	0.00
Reference Reading @ 50% Span (in H2O)	0.130	0.260	0.50	9.40	2.43	9.70	0.120	0.99	4.73
Device Reading (in H2O)	0.124	0.260	0.48	9.40	2.54	9.50	0.120	0.98	4.90
% Difference (Allowed = 0.05)	4.615	0.00	4.00	0.00	4.53	2.06	0.000	1.02	3.47
Reference Reading @ 90% Span (in H2O)	0.261	0.500	0.85	1.89	4.52	24.5	0.248	1.67	8.20
Device Reading (in H2O)	0.249	0.495	0.81	1.88	4.64	25.0	0.240	1.74	8.60
% Difference (Allowed = 0.05)	4.598	1.00	4.71	0.53	2.65	2.04	3.333	4.02	4.65

serial number	105			106		
Span (in H2O)	**0.25**	**2**	**25**	**0.5**	**4**	**15**
Reference Reading @ 0% Span (in H2O)	0.000	0.00	0.00	0.000	0.00	0.00
Device Reading (in H2O)	0.000	0.00	0.00	0.000	0.00	0.00
% Difference (Allowed = 0.05)	0.000	0.00	0.00	0.000	0.00	0.00
Reference Reading @ 50% Span (in H2O)	0.122	0.97	8.90	0.233	1.86	8.00
Device Reading (in H2O)	0.123	0.95	9.30	0.232	1.95	7.90
% Difference (Allowed = 0.05)	0.820	2.11	4.30	0.431	4.62	1.27
Reference Reading @ 90% Span (in H2O)	0.239	1.92	24.5	0.470	3.60	14.4
Device Reading (in H2O)	0.235	1.98	23.7	0.461	3.60	14.8
% Difference (Allowed = 0.05)	1.702	3.03	3.38	1.952	0.00	2.70
Calibration Date 12/30/2008 By MC						

Type S pitot tube construction details:

a) end view; face opening planes perpendicular to transverse axis.
b) top view; face opening planes parallel to longitudinal axis.
c) side view; both legs of equal length and centerlines coincident, when viewed from both sides.

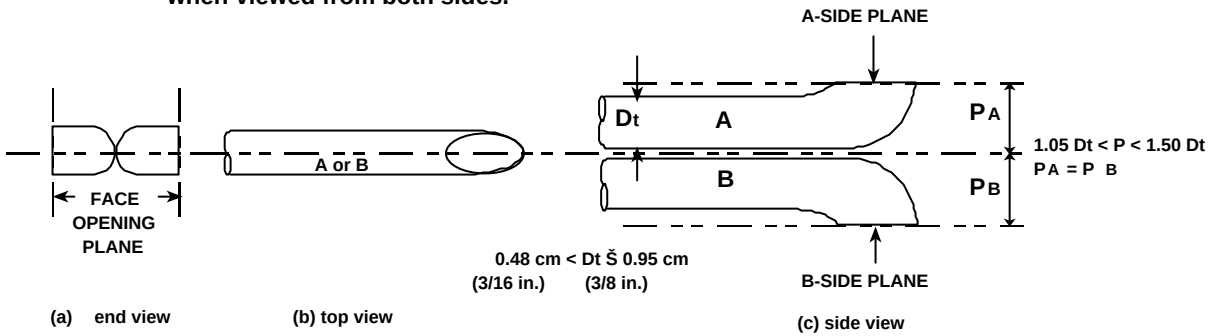

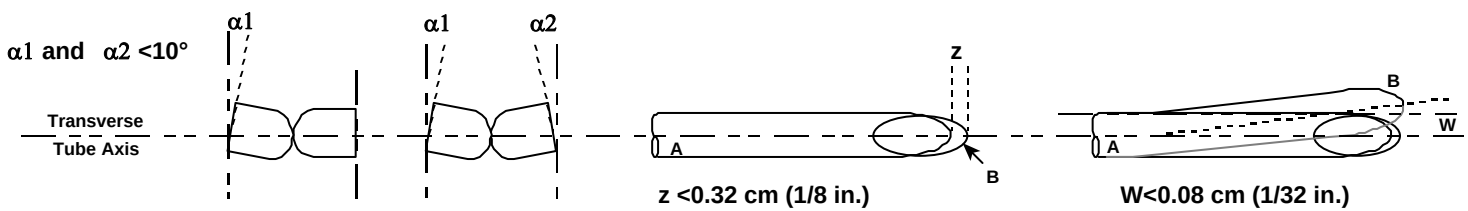

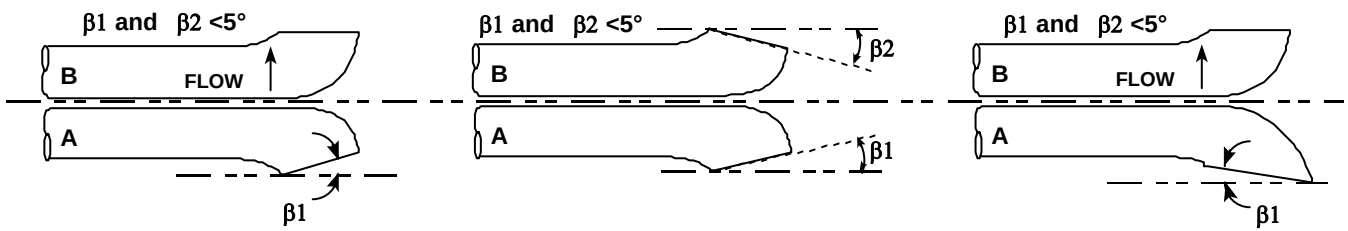

Sampling Nozzle, Thermocouple, and Probe Configuration

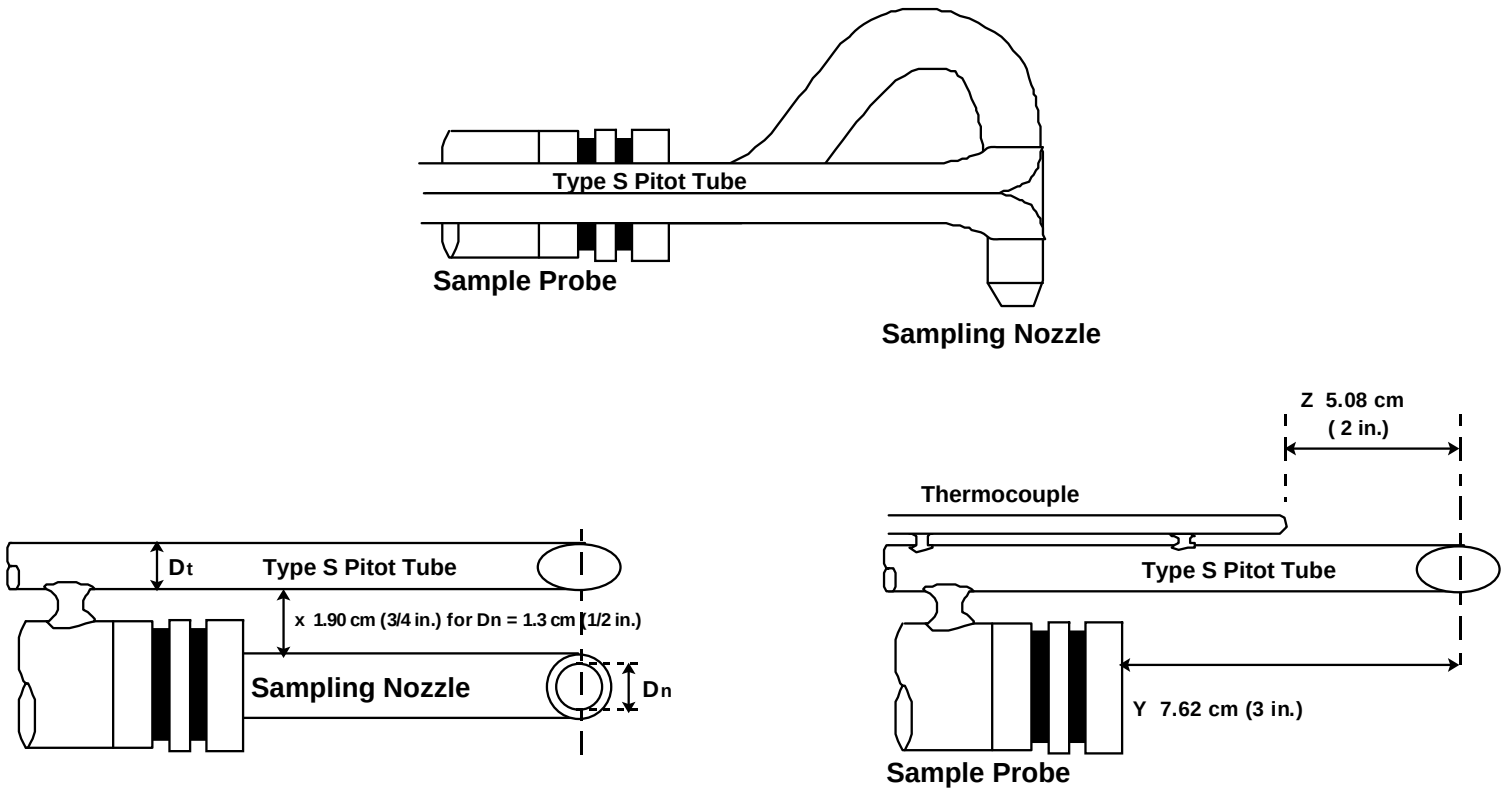

APPENDIX B FIELD DATA SHEETS

Sanders Engineering & Analytical Services, Inc.

Moisture - EPA Method 4

COMPANY Hunt Refining DATE 11-17-10 BOX No. S-102 DHa 2.001 Y .974

PLANT Tuscaloosa OPERATOR TBH UNIT #2 Hydrogen Plant Reformer

BALANCE No. 105 STD. WT. (gm) 2000 BALANCE RESPONCE (gm) 1998.9

Run # 1

METER READING	LEAK CHECK	
	Pre	Post
Final 218.695		
Initial 179.900	10 in. Hg	10 in. Hg
Net 38.795	.001 CFM	.004 CFM

VOLUME OF LIQUID WATER COLLECTED ml. - gr.			
Imp 1	Imp 2	Imp 3	Imp 4
271	13	/	1786.6
Final 100	Final 0	Final /	Final 1770.0
Initial 171	Initial 13	Initial /	Initial 16.6
Net	Net	Net	Net
		Total	280.6

Pressure		Gas Analysis	
STATIC	BAROMETRIC	O_2 %	
-0.7 in. H_2O	30.15 in. Hg	CO_2 %	16%
		CO %	

Ts - 325

Time	Gas Meter Volume Cu. Ft.	ΔH In. H_2O	Meter Temp	Imp. Temp
15:17	179.900	1.5	67	40
15:22	184.1	1.5	67	40
15:27	186.8	1.5	68	40
15:32	189.3	1.5	68	40
15:37	192.9	1.5	68	40
15:42	196.6	1.5	68	40
47	198.3	1.5	68	40
52	202.9	1.5	68	40
57	205.6	1.5	68	40
16:02	209.2	1.5	68	40
07	211.1	1.5	68	41
12	214.5	1.5	68	41
17	218.695	1.5	68	42

Run # 2

METER READING	LEAK CHECK	
	Pre	Post
Final 257.886		
Initial 219.585		10
Net 38.301	in. Hg CFM	in. Hg .002 CFM

VOLUME OF LIQUID WATER COLLECTED ml. - gr.			
Imp 1	Imp 2	Imp 3	Imp 4
288	5	/	1792.1
Final 100	Final 0	Final /	Final 1786.6
Initial 188	Initial 5	Initial /	Initial 5.5
Net	Net	Net	Net
		Total	198.5

Pressure		Gas Analysis	
STATIC	BAROMETRIC	O_2 %	
-0.7 in. H_2O	30.15 in. Hg	CO_2 %	16%
		CO %	

Time	Gas Meter Volume Cu. Ft.	ΔH In. H_2O	Meter Temp	Imp. Temp
16:32	219.585	1.5	67	41
37	223.0	1.5	66	41
42	226.6	1.5	66	41
47	229.2	1.5	66	41
52	232.4	1.5	66	42
57	235.8	1.5	66	42
17:02	238.9	1.5	66	42
07	242.3	1.5	66	42
12	245.0	1.5	66	42
17	248.3	1.5	66	42
22	251.6	1.5	66	42
27	254.5	1.5	65	42
32	257.886	1.5	65	42

Run # 3

METER READING	LEAK CHECK	
	Pre	Post
Final 296.361		
Initial 258.000		10
Net 38.361	in. Hg CFM	in. Hg .003 CFM

VOLUME OF LIQUID WATER COLLECTED ml. - gr.			
Imp 1	Imp 2	Imp 3	Imp 4
292	6	/	1800.6
Final 100	Final ~~108~~	Final /	Final 1792.1
Initial 192	Initial 6	Initial /	Initial 8.5
Net	Net	Net	Net
		Total	206.5

Pressure		Gas Analysis	
STATIC	BAROMETRIC	O_2 %	
-0.7 in. H_2O	30.15 in. Hg	CO_2 %	16%
		CO %	

Time	Gas Meter Volume Cu. Ft.	ΔH In. H_2O	Meter Temp	Imp. Temp
17:48	258.000	1.5	62	40
53	261.8	1.5	62	40
58	264.2	1.5	62	40
18:03	267.5	1.5	61	40
08	270.6	1.5	61	40
13	274.1	1.5	61	40
18	277.5	1.5	61	40
23	281.1	1.5	61	40
28	283.4	1.5	61	41
33	286.6	1.5	61	41
38	289.9	1.5	61	41
43	292.4	1.5	61	41
48	296.361	1.5	61	41

Form Revised 2/15/10

Comments: JAR ATEM 11/17/2010

APPENDIX C SAMPLE CALCULATIONS

SAMPLE CALCULATIONS, RUN 1
HUNT REFINING
NO. 2 HYDROGEN PLANT REFORMER
11/17/2010

Absolute Stack Pressure (inches Mercury)

$$P_S = P_{bar} + \frac{\overline{P_g}}{13.6}$$

P_g = Stack Static Pressure (inches Water) = -0.70
P_{bar} = Barometric Pressure (inches Mercury) = 30.15
P_s = 30.10

Absolute Pressure at the Dry Gas Meter (inches Mercury)

$$P_m = P_{bar} + \frac{\overline{\Delta H}}{13.6}$$

P_{bar} = Barometric Pressure (inches Mercury) = 30.15
ΔH = Average pressure difference of orifice (inches Water) = 1.50
P_m = 30.26

Volume of Gas Sampled Measured by Dry Gas Meter
(corrected to standard conditions, SDCF)

$$Vm(Std) = K_1 V_m Y \left[\frac{P_{bar} + \frac{\overline{\Delta H}}{13.6}}{\overline{T_m}} \right]$$

K_1 = Degrees R/inches Mercury = 17.64
V_m = Volume of gas sample as measured by dry gas meter (actual cubic feet) = 38.80
Y = Dry gas meter calibration factor (dimensionless) = 0.9740
P_{bar} = Barometric Pressure (inches Mercury) = 30.15
Δ H = Average pressure difference of orifice (inches H2O) = 1.50
T_m = Average absolute temperature of the dry gas, degrees Rankin = 527.5
$V_{m\,(Std)}$ = 38.227

Volume of Water Vapor in Gas Sample

(corrected to standard conditions, SDCF)

$$V_{w\,(Std)} = 0.04707\ V_{lc}$$

V_{lc} = Total volume of liquid collected in impingers and silica gel $_{(milliliters)}$ = 200.6

$V_{w\,(Std)}$ = 9.442

Water Vapor in the Gas Stream $_{\text{proportion by volume (dimensionless)}}$

$$B_{ws} = \frac{V_{w(Std)}}{V_{m(Std)} + V_{w(Std)}}$$

$V_{w\,(std)}$ = Volume of water in gas sample $_{(corrected\ to\ standard\ conditions)}$ = 9.442

$V_{m(std)}$ = Volume of sample measured by dry gas meter $_{(\ standard\ conditions)}$ = 38.227

B_{ws} = 0.198

Molecular Weight of Stack Gas $_{\text{(dry basis, lb/lb mole)}}$

$$M_d = 0.44(\%CO_2) + 0.32(\%O_2) + 0.28(\%N_2 + \%CO)$$

$\%CO_2$ = Number percent by volume $_{(dry\ basis\ from\ gas\ analysis)}$ = 16.0

$\%O_2$ = Number percent by volume $_{(dry\ basis\ from\ gas\ analysis)}$ = 2.7

$\%N_2$+%CO = Number percent by volume $_{(dry\ basis\ from\ gas\ analysis)}$ = 81.3

M_d = 30.67

Molecular Weight of Stack Gas $_{\text{(wet basis, lb/lb mole)}}$

$$M_s = M_d(1 - B_{ws}) + 18(B_{ws})$$

M_d = Molecular weight of stack gas $_{(dry\ basis,\ lb/lb\ mole)}$ = 30.67

B_{ws} = Water vapor in the gas stream $_{(proportion\ by\ volume,\ dimensionless)}$ = 0.198

M_s = 28.16

Volume of Gas Sampled Through Nozzle (actual cubic feet)

$$V_n = \left[(0.002669)(V_{lc}) + Y \frac{V_m}{\overline{T_m}} \left(P_{bar} + \frac{\overline{\Delta H}}{13.6} \right) \right] \frac{\overline{T_s}}{P_s}$$

V_{lc} = Total volume of liquid collected in impingers and silica gel (milliliters)	=	200.6
Y = Dry gas meter calibration factor (dimensionless)	=	0.9740
V_m = Volume of gas sample as measured by dry gas meter (actual cubic feet)	=	38.795
Tm = Average absolute temperature of dry gas meter, degrees Rankin	=	527.5
P_{bar} = Barometric Pressure (inches Mercury)	=	30.15
ΔH = Average pressure difference of orifice (inches Water)	=	1.50
Ts = Average absolute temperature of stack, degrees Rankin	=	784.7
P_s = Absolute stack pressure (inches Mercury)	=	30.10
V_n =		70.466

Volatile Organic Compounds Emissions Pounds Per Million Btu

(EPA Oxygen F Factor)

$$E_x = \frac{MW_x}{385,000,000} C_{ppm_x} \; F_{O2} \left(\frac{20.9}{20.9 - \%O_2} \right)$$

x = Compound of interest (SO2 NOx CO VOC TRS etc)	=	VOC
MWx = Molecular weight of compound (dry basis, lb/lb mole)	=	34.08
Cppmx = Pollutant Concentration (parts per million, dry basis)	=	0.4
F_{O2} = Oxygen based F factor (SDCF/mmBtu)	=	8,285
$\%O_2$ = Number percent by volume (dry basis from gas analysis)	=	2.7
E_{O2} =		0.0005

VOC Emissions Pounds per Hour (O2 F Factor)

$$E_{lbs/hr\ x} = HI \;\; C_{lbs/MMBtu\ x}$$

x = Compound of interest (SO2 NOx CO VOC TRS etc)	=	VOC
HI = Total Heat Input measured (million Btu per hour)	=	25.12
$C_{lbs/MMBtux}$ = Pollutant Concentration (pounds per million Btu, dry basis)	=	0.0005
$E_{lbs/hrx}$ =		0.012

SAMPLE CALCULATIONS, RUN 1
HUNT REFINING
NO. 2 HYDROGEN PLANT REFORMER
11/18/2010

Nitrogen Oxides Emissions Pounds per Hour (O2 F Factor)

$$E_{lbs/hr\ x} = HI\ \ C_{lbs/MMBtu\ x}$$

x = Compound of interest (SO2 NOx CO VOC TRS etc) =	NOx
HI = Total Heat Input measured (million Btu per hour) =	40
$C_{lbs/MMBtux}$ = Pollutant Concentration (pounds per million Btu, dry basis) =	0.0
$E_{lbs/hrx}$ =	0.7

Nitrogen Oxides Emissions Pounds Per Million Btu

(EPA Oxygen F Factor)

$$E_x = \frac{MW_x}{385,000,000} C_{ppm_x}\ F_{O2}\left(\frac{20.9}{20.9 - \%O_2}\right)$$

x = Compound of interest (SO2 NOx CO VOC TRS etc) =	NOx
MWx = Molecular weight of compound (dry basis, lb/lb mole) =	46.01
Cppmx = Pollutant Concentration (parts per million, dry basis) =	14.2
F_{O2} = Oxygen based F factor (SDCF/mmBtu) =	8,332
$\%O_2$ = Number percent by volume (dry basis from gas analysis) =	2.6
E_{O2} =	0.016

APPENDIX D GAS CERTIFICATIONS

IWS Gas and Supply
111 Buras Drive
Belle Chasse, LA 70037
504-392-2400

Certificate of Analysis
EPA Protocol Gas Mixture

Cylinder Number	**EB0025185**	Customer	**Southern Gas & Supply**	Certification Date	**21 Jun 2010**
Cylinder Size	**150AL**		**Mobile**	Expiration Date	**21 Jun 2013**
Cylinder Pressure	**2015 psig**			Lot Number	**1006161247**
Cylinder Contents	**145 ft3**	PO Number	**940612-1**	Part Number	**GSPENIOX10R150(**
Cylinder CGA	**590**				

Component	Requested Concentration	Certified Concentration	Accuracy	Procedure
Oxygen	10 %	10.03 %	+/- 1 %	G1
Nitrogen	Balance	Balance		

Component	*Standard Cylinder*	*Reference Number*	*Reference Concentration*
Oxygen	EB0012595	GMIS	21 %
Instrument Make-Model	*Serial Number*	*Analytical Principle*	*Calibration date*
Siemens - Ultramat/Oxymat 6	N1-U5-0235	NDIR/Paramagnetic	4 Jun 2010

1st Analysis	Date: 06/21/10			
R 21.00	S 10.03	Z 0.00		1st Analysis 10.03
S 10.03	Z 0.00	R 21.00		
Z 0.00	R 21.00	S 10.03		

This calibration standard certified per the 1997 EPA Traceability Protocol (EPA-600/97/121), using procedure listed.
All values certified to be NIST traceable.

Do not use this cylinder below 150 psig.

Authorizing Signature: Anna Scorsone

IWS Gas and Supply
111 Buras Drive
Belle Chasse, LA 70037
504-392-2400

Certificate of Analysis
EPA Protocol Gas Mixture

Cylinder Number	**EB0012466**	Customer	**Southern Gas & Supply**	Certification Date	**19 Oct 2009**
Cylinder Size	**150AL**			Expiration Date	**19 Apr 2010**
Cylinder Pressure	**2000 psig**		**RECERTIFICATION**	Lot Number	**0903180418**
Cylinder Contents	**143 ft3**	PO Number		Part Number	**GSPRECERT**
Cylinder CGA	**660**				

Component	Requested Concentration	Certified Concentration	Accuracy	Procedure
Nitrogen Dioxide	50 PPM	47.9 PPM	+/- 1 %	G1
Nitrogen	Balance	Balance		

Component	*Standard Cylinder*	*Reference Number*	*Reference Concentration*
Nitrogen Dioxide	CC250371	GMIS	96.6 PPM
Instrument Make-Model	*Serial Number*	*Analytical Principle*	*Calibration date*
Eco Physics - CLD 700 EL	73236	Chemiluminescence	19 Oct 2009

1st Analysis			Date: 10/12/09			2nd Analysis			Date: 10/19/09				
R	96.6	S	48.1	Z	0.00	R	96.6	S	47.7	Z	0.00	1st Analysis	48.1
S	48.1	Z	0.00	R	96.6	S	47.7	Z	0.00	R	96.6	2nd Analysis	47.7
Z	0.00	R	96.6	S	48.1	Z	0.00	R	96.6	S	47.7	Relative Difference	0.84%

This calibration standard certified per the 1997 EPA Traceability Protocol (EPA-600/97/121), using procedure listed.
All values certified to be NIST traceable.

Do not use this cylinder below 150 psig.

Authorizing Signature: _____

SANDERS ENGINEERING & ANALYTICAL SERVICES, INC.
Phone: 251-633-4120
Fax: 251-633-2285
2255 Schillinger Road N.
Semmes, AL 36575

RECERTIFICATION OF ANALYSIS

CUSTOMER

Sanders Engineering
2255 Schillinger Rd. N
Mobile, AL 36575

CYLINDER NO	EB0012466
EXPIRATION DATE	5/29/2012
ORIGINAL CERTIFICATION DATE	10/19/2009
RECERTIFICATION DATE	5/29/2010
PART NUMBER	GSPRECERT
REFFERENCE NUMBER	NA

Do not use this cylinder below 150 psig. i.e. 1.0 Megapascal

Analytical Results

Component		
Nitrogen Dioxide	**Certified Concentration on 10/19/09**	**47.9** ppm
	Reanalyzed Concentration on 05/29/10	46.12 ppm

Reanalysis is within 5 % of Original Certification. Certified Concentration is the Original Value.

Analytical Instruments Used in Assay

Instrument/Make/Model	**Analytical Principle**	**Last Multipoint Calibration Check**
TEMET Gasmet DX4000	FTIR	3/12/2010

IWS Specialty Gases
111 Buras Drive
Belle Chasse, LA 70037
504-392-2400

Certificate of Analysis
EPA Protocol Gas Mixture

Cylinder Number	**EB0020989**	Customer	**Southern Gas & Supply**	Certification Date	**14 Jan 2010**
Cylinder Size	**150AL**			Expiration Date	**14 Jan 2013**
Cylinder Pressure	**2000 psig**			Lot Number	**0912312078**
Cylinder Contents	**144 ft3**	PO Number	**421543-1**	Part Number	**GSPECAP30P150AC**
Cylinder CGA	**590**				

Component	Requested Concentration	Certified Concentration	Accuracy	Procedure
Propane	90 PPM	93.20 PPM	+/- 1 %	G1
Air	Balance	Balance		

Component	*Standard Cylinder*	*Reference Number*	*Reference Concentration*
Propane	XF003755B	SRM1669b	488 PPM
Instrument Make-Model	*Serial Number*	*Analytical Principle*	*Calibration date*
Siemens - Fidamat 5E-P	N1-U5-0231	FID	4 Jan 2010

1st Analysis	Date: 01/14/10						
R	488.00	S	93.20	Z	0.00	1st Analysis	93.20
S	93.20	Z	0.00	R	488.00		
Z	0.00	R	488.00	S	93.20		

This calibration standard certified per the 1997 EPA Traceability Protocol (EPA-600/97/121), using procedure listed.
All values certified to be NIST traceable.

Do not use this cylinder below 150 psig.

Authorizing Signature: Anna Scarsone

IWS Specialty Gases
111 Buras Drive
Belle Chasse, LA 70037
504-392-2400

Certificate of Analysis
EPA Protocol Gas Mixture

Cylinder Number	**EB0021148**	Customer	**Southern Gas & Supply**	Certification Date	**14 Jan 2010**
Cylinder Size	**150AL**			Expiration Date	**14 Jan 2013**
Cylinder Pressure	**2000 psig**			Lot Number	**0912312077**
Cylinder Contents	**144 ft3**	PO Number	**421543-1**	Part Number	**GSPECAP50P150AC**
Cylinder CGA	**590**				

Component	Requested Concentration	Certified Concentration	Accuracy	Procedure
Propane	50 PPM	52.00 PPM	+/- 1 %	G1
Air	Balance	Balance		

Component	*Standard Cylinder*	*Reference Number*	*Reference Concentration*
Propane	XF003755B	SRM1669b	488 PPM
Instrument Make-Model	*Serial Number*	*Analytical Principle*	*Calibration date*
Siemens - Fidamat 5E-P	N1-U5-0231	FID	4 Jan 2010

1st Analysis	Date: 01/14/10						
R	488.00	S	52.00	Z	0.00	1st Analysis	52.00
S	52.00	Z	0.00	R	488.00		
Z	0.00	R	488.00	S	52.00		

This calibration standard certified per the 1997 EPA Traceability Protocol (EPA-600/97/121), using procedure listed.
All values certified to be NIST traceable.

Do not use this cylinder below 150 psig.

Authorizing Signature: Anna Scarsone

IWS Specialty Gases
111 Buras Drive
Belle Chasse, LA 70037
504-392-2400

Certificate of Analysis
EPA Protocol Gas Mixture

Cylinder Number	**EB0020983**	Customer	**Southern Gas & Supply**	Certification Date	**14 Jan 2010**
Cylinder Size	**150AL**			Expiration Date	**14 Jan 2013**
Cylinder Pressure	**2000 psig**			Lot Number	**0912312076**
Cylinder Contents	**144 ft3**	PO Number	**421543-1**	Part Number	**GSPECAP30P150AC**
Cylinder CGA	**590**				

Component	Requested Concentration	Certified Concentration	Accuracy	Procedure
Propane	30 PPM	30.90 PPM	+/- 1 %	G1
Air	Balance	Balance		

Component	*Standard Cylinder*	*Reference Number*	*Reference Concentration*
Propane	XF003755B	SRM1669b	488 PPM
Instrument Make-Model	*Serial Number*	*Analytical Principle*	*Calibration date*
Siemens - Fidamat 5E-P	N1-U5-0231	FID	4 Jan 2010

1st Analysis	Date: 01/14/10			
R 488.00	S 30.90	Z 0.00		1st Analysis 30.90
S 30.90	Z 0.00	R 488.00		
Z 0.00	R 488.00	S 30.90		

This calibration standard certified per the 1997 EPA Traceability Protocol (EPA-600/97/121), using procedure listed.
All values certified to be NIST traceable.

Do not use this cylinder below 150 psig.

Authorizing Signature: Anna Scansoni

40 CFR 52 APPENDIX M, METHOD 205
November 16, 2010
Field Calibration of Chosen Analyzer
Thermo Nox
249.1

	Cylinder value	Instrument Response	Percent Difference
Zero Gas	0	0.0	Between
Mid Gas	120.5	121.0	Instrument
High Gas	249.1	249.1	Response
Mid Gas rep. #1	120.5	*121.0*	Cylinder
Mid Gas rep. #2	120.5	*122.0*	value
Mid Gas rep. #3	120.5	*121.0*	(allowed 2%)
Average	120.5	121.3	**0.69**

Field Evaluation of Calibration Gas Dilution System

Pollutant			Zero Air			Dilution	Flow	Predicted
Dilution Capillary	**Percent** Gage	**Flow** (mL/min)	**Dilution** Capillary	**Percent** Gage	**Flow** (mL/min)	**Factor** Percent	**Total** (mL/min)	**Conc. ppm**
A1A2A3	**10**	**3380.8**	**C2**	**40**	**2969.0**	**53.24**	**6,350**	**132.63**
A3	**20**	**4296.0**	**C1C2C3**	**10**	**4638.0**	**48.09**	**8,934**	**119.78**

Analyzer Response (PPM)				Percent Difference From Mean			Predicted
First Repetition	**Second Repetition**	**Third Repetition**	**Mean (three repetitions)**	**First Repetition**	**Second Repetition**	**Third Repetition**	**Vs Analyzer**
132.00	131.00	131.60	131.53	0.35	0.41	0.05	0.83
119.00	119.50	119.00	119.17	0.14	0.28	0.14	0.51
				Allowable = 2 %			

Manufactured Calibration Gases

NOx Cylinder Gas Conc. **120.50**

Pollutant			Zero Air			Dilution	Flow	Predicted
Dilution Capillary	**Percent** Gage	**Flow** (mL/min)	**Dilution** Capillary	**Percent** Gage	**Flow** (mL/min)	**Factor** Percent	**Total** (mL/min)	**Conc. ppm**
A3	**10**	**2871.0**	**C3**	**15**	**4347.0**	**39.78**	**7,218**	**47.93**
A3	**10**	**2871.0**	**C3**	**55**	**10890.0**	**20.86**	**13,761**	**25.14**
A2	**45**	**1375.0**	**C2**	**10**	**1231.0**	**52.76**	**2,606**	
A2	**10**	**501.0**	**C2**	**10**	**1231.0**	**28.93**	**1,732**	

IWS Specialty Gases
111 Buras Drive
Belle Chasse, LA 70037
504-392-2400

Certificate of Analysis
EPA Protocol Gas Mixture

Cylinder Number	**CC249400**	Customer	**Southern Gas & Supply**	Certification Date	**19 Oct 2009**
Cylinder Size	**150AL**			Expiration Date	**19 Oct 2011**
Cylinder Pressure	**2000 psig**			Lot Number	**0910021581**
Cylinder Contents	**148 ft3**	PO Number	**408063-1**	Part Number	**GSPE5NB150AG02C**
Cylinder CGA	**660**				

Component	Requested Concentration	Certified Concentration	Accuracy	Procedure
Carbon Monoxide	250 PPM	252.3 PPM	+/- 1 %	G1
Nitric Oxide	250 PPM	249.1 PPM	+/- 1 %	G1
Sulfur Dioxide	250 PPM	247.8 PPM	+/- 1 %	G1
Carbon Dioxide	10 %	9.917 %	+/- 1 %	G1
Nitrogen	Balance	Balance	NOX conc. = 249.1 PPM	

Component	*Standard Cylinder*	*Reference Number*	*Reference Concentration*
Carbon Monoxide	CC250365	GMIS	247.8 PPM
Instrument Make-Model	*Serial Number*	*Analytical Principle*	*Calibration date*
Siemens - Ultramat 6	N1-U5-0234	NDIR	19 Oct 2009

1st Analysis	Date: 10/12/09	2nd Analysis	Date: 10/19/09		
R 247.8 S 252.3 Z 0.00		R 247.8 S 252.2 Z 0.00		1st Analysis	252.3
S 252.3 Z 0.00 R 247.8		S 252.2 Z 0.00 R 247.8		2nd Analysis	252.2
Z 0.00 R 247.8 S 252.3		Z 0.00 R 247.8 S 252.2		Relative Difference	0.04%

Component	*Standard Cylinder*	*Reference Number*	*Reference Concentration*
Nitric Oxide	CC250469	GMIS	978.3 PPM
Instrument Make-Model	*Serial Number*	*Analytical Principle*	*Calibration date*
Eco Physics - CLD 700 EL	73236	Chemiluminescence	19 Oct 2009

1st Analysis	Date: 10/12/09	2nd Analysis	Date: 10/19/09		
R 978.0 S 249.0 Z 0.00		R 978.0 S 249.0 Z 0.00		1st Analysis	249.1
S 249.0 Z 0.00 R 978.0		S 249.0 Z 0.00 R 978.0		2nd Analysis	249.1
Z 0.00 R 978.0 S 249.0		Z 0.00 R 978.0 S 249.0			0.00%

Component	*Standard Cylinder*	*Reference Number*	*Reference Concentration*
Sulfur Dioxide	CC250501	GMIS	493.6 PPM
Instrument Make-Model	*Serial Number*	*Analytical Principle*	*Calibration date*
Siemens - Ultramat 6	N1-U5-0236	NDIR	19 Oct 2009

1st Analysis	Date: 10/12/09	2nd Analysis	Date: 10/19/09		
R 493.6 S 247.5 Z 0.00		R 493.6 S 248.0 Z 0.00		1st Analysis	247.5
S 247.5 Z 0.00 R 493.6		S 248.0 Z 0.00 R 493.6		2nd Analysis	248.0
Z 0.00 R 493.6 S 247.5		Z 0.00 R 493.6 S 248.0		Relative Difference	0.20%

Component	*Standard Cylinder*	*Reference Number*	*Reference Concentration*
Carbon Dioxide	CAL016183	SRM2745	15.633 %
Instrument Make-Model	*Serial Number*	*Analytical Principle*	*Calibration date*
Siemens - Ultramat/Oxymat 6	N1-U5-0235	NDIR/Paramagnetic	19 Oct 2009

1st Analysis	Date: 10/19/09		
R 15.630 S 9.915 Z 0.000		1st Analysis	9.917
S 9.915 Z 0.000 R 15.630			
Z 0.000 R 15.630 S 9.915			

This calibration standard certified per the 1997 EPA Traceability Protocol (EPA-600/97/121), using procedure listed.
All values, **excluding NOX concentration**, certified to be NIST traceable.

Do not use this cylinder below 150 psig.

Authorizing Signature: _____

IWS Specialty Gases
111 Buras Drive
Belle Chasse, LA 70037
504-392-2400

Certificate of Analysis
EPA Protocol Gas Mixture

Cylinder Number	**EB0025108**	Customer	**Southern Gas & Supply**	Certification Date	**14 Jun 2010**
Cylinder Size	**150AL**			Expiration Date	**14 Jun 2012**
Cylinder Pressure	**2015 psig**			Lot Number	**1006021165**
Cylinder Contents	**146 ft3**	PO Number	**940612-1**	Part Number	**GSPE5NB150AG01C**
Cylinder CGA	**660**				

Component	Requested Concentration	Certified Concentration	Accuracy	Procedure
Carbon Monoxide	125 PPM	122.9 PPM	+/- 1 %	G1
Nitric Oxide	125 PPM	120.5 PPM	+/- 1 %	G1
Sulfur Dioxide	125 PPM	121.4 PPM	+/- 1 %	G1
Carbon Dioxide	5 %	4.882 %	+/- 1 %	G1
Nitrogen	Balance	Balance	NOX conc. = 120.5 PPM	

Component	*Standard Cylinder*	*Reference Number*	*Reference Concentration*
Carbon Monoxide	CC250365	GMIS	247.8 PPM
Instrument Make-Model	*Serial Number*	*Analytical Principle*	*Calibration date*
Siemens - Ultramat 6	N1-U5-0234	NDIR	4 Jun 2010

1st Analysis	Date: 06/07/10	2nd Analysis	Date: 06/14/10		
R 247.8 S 122.8 Z 0.00		R 247.8 S 122.9 Z 0.00		1st Analysis	122.8
S 122.8 Z 0.00 R 247.8		S 122.9 Z 0.00 R 247.8		2nd Analysis	122.9
Z 0.00 R 247.8 S 122.8		Z 0.00 R 247.8 S 122.9		Relative Difference	0.08%

Component	*Standard Cylinder*	*Reference Number*	*Reference Concentration*
Nitric Oxide	CC250469	GMIS	978.3 PPM
Instrument Make-Model	*Serial Number*	*Analytical Principle*	*Calibration date*
Eco Physics - CLD 700 EL	73236	Chemiluminescence	4 Jun 2010

1st Analysis	Date: 06/07/10	2nd Analysis	Date: 06/14/10		
R 978.0 S 120.0 Z 0.00		R 978.0 S 121.0 Z 0.00		1st Analysis	120.0
S 120.0 Z 0.00 R 978.0		S 121.0 Z 0.00 R 978.0		2nd Analysis	121.0
Z 0.00 R 978.0 S 120.0		Z 0.00 R 978.0 S 121.0		Relative Difference	0.83%

Component	*Standard Cylinder*	*Reference Number*	*Reference Concentration*
Sulfur Dioxide	CC250501	GMIS	493.6 PPM
Instrument Make-Model	*Serial Number*	*Analytical Principle*	*Calibration date*
Siemens - Ultramat 6	N1-U5-0236	NDIR	4 Jun 2010

1st Analysis	Date: 06/07/10	2nd Analysis	Date: 06/14/10		
R 493.6 S 121.2 Z 0.00		R 493.6 S 121.5 Z 0.00		1st Analysis	121.2
S 121.2 Z 0.00 R 493.6		S 121.5 Z 0.00 R 493.6		2nd Analysis	121.5
Z 0.00 R 493.6 S 121.2		Z 0.00 R 493.6 S 121.5		Relative Difference	0.25%

Component	*Standard Cylinder*	*Reference Number*	*Reference Concentration*
Carbon Dioxide	CAL016183	SRM2745	15.633 %
Instrument Make-Model	*Serial Number*	*Analytical Principle*	*Calibration date*
Siemens - Ultramat/Oxymat 6	N1-U5-0235	NDIR/Paramagnetic	4 Jun 2010

1st Analysis	Date: 06/14/10		
R 15.630 S 4.881 Z 0.000		1st Analysis	4.882
S 4.881 Z 0.000 R 15.630			
Z 0.000 R 15.630 S 4.881			

This calibration standard certified per the 1997 EPA Traceability Protocol (EPA-600/97/121), using procedure listed. All values, **excluding NOX concentration**, certified to be NIST traceable.

Do not use this cylinder below 150 psig.

Authorizing Signature: Anna Scansone

APPENDIX E OPERATIONAL DATA AND FUEL ANALYSIS

HP2 Reformer

RFG Fuel Flow - MMSCFD			PSA OFFGAS Fuel Flow - MMSCFD			NOx - PPM			O2 - Percent		
tag	time	FG Flow MMSCFD, 1 min ave.	tag	time	FG Flow MMSCFD, 1 min ave.	tag	time	Nox (ppm), 1 min ave.	tag	time	O_2 (%), 1 min ave.
H2-FIC-1111.1	11/17/10 15:17	0.873	H2-FIC-1104.1	11/17/10 15:17	13.3	H2-AI-1050A.1	11/17/10 15:17	13	H2-AI-1050B.1	11/17/10 15:17	4.6
H2-FIC-1111.1	11/17/10 15:18	0.872	H2-FIC-1104.1	11/17/10 15:18	13.3	H2-AI-1050A.1	11/17/10 15:18	13	H2-AI-1050B.1	11/17/10 15:18	4.6
H2-FIC-1111.1	11/17/10 15:19	0.872	H2-FIC-1104.1	11/17/10 15:19	13.2	H2-AI-1050A.1	11/17/10 15:19	13	H2-AI-1050B.1	11/17/10 15:19	5
H2-FIC-1111.1	11/17/10 15:20	0.872	H2-FIC-1104.1	11/17/10 15:20	13.3	H2-AI-1050A.1	11/17/10 15:20	13	H2-AI-1050B.1	11/17/10 15:20	5.1
H2-FIC-1111.1	11/17/10 15:21	0.871	H2-FIC-1104.1	11/17/10 15:21	13.6	H2-AI-1050A.1	11/17/10 15:21	13	H2-AI-1050B.1	11/17/10 15:21	5.7
H2-FIC-1111.1	11/17/10 15:22	0.871	H2-FIC-1104.1	11/17/10 15:22	12.7	H2-AI-1050A.1	11/17/10 15:22	13	H2-AI-1050B.1	11/17/10 15:22	5
H2-FIC-1111.1	11/17/10 15:23	0.871	H2-FIC-1104.1	11/17/10 15:23	13.2	H2-AI-1050A.1	11/17/10 15:23	13	H2-AI-1050B.1	11/17/10 15:23	5.5
H2-FIC-1111.1	11/17/10 15:24	0.87	H2-FIC-1104.1	11/17/10 15:24	12.9	H2-AI-1050A.1	11/17/10 15:24	13	H2-AI-1050B.1	11/17/10 15:24	5
H2-FIC-1111.1	11/17/10 15:25	0.87	H2-FIC-1104.1	11/17/10 15:25	13.3	H2-AI-1050A.1	11/17/10 15:25	13	H2-AI-1050B.1	11/17/10 15:25	5
H2-FIC-1111.1	11/17/10 15:26	0.869	H2-FIC-1104.1	11/17/10 15:26	12.9	H2-AI-1050A.1	11/17/10 15:26	13	H2-AI-1050B.1	11/17/10 15:26	4.6
H2-FIC-1111.1	11/17/10 15:27	0.869	H2-FIC-1104.1	11/17/10 15:27	12.8	H2-AI-1050A.1	11/17/10 15:27	13	H2-AI-1050B.1	11/17/10 15:27	5.3
H2-FIC-1111.1	11/17/10 15:28	0.869	H2-FIC-1104.1	11/17/10 15:28	12.8	H2-AI-1050A.1	11/17/10 15:28	13	H2-AI-1050B.1	11/17/10 15:28	5.3
H2-FIC-1111.1	11/17/10 15:29	0.868	H2-FIC-1104.1	11/17/10 15:29	12.7	H2-AI-1050A.1	11/17/10 15:29	13	H2-AI-1050B.1	11/17/10 15:29	5.3
H2-FIC-1111.1	11/17/10 15:30	0.868	H2-FIC-1104.1	11/17/10 15:30	12.9	H2-AI-1050A.1	11/17/10 15:30	13	H2-AI-1050B.1	11/17/10 15:30	5.1
H2-FIC-1111.1	11/17/10 15:31	0.868	H2-FIC-1104.1	11/17/10 15:31	13.6	H2-AI-1050A.1	11/17/10 15:31	13	H2-AI-1050B.1	11/17/10 15:31	5.1
H2-FIC-1111.1	11/17/10 15:32	0.867	H2-FIC-1104.1	11/17/10 15:32	13.5	H2-AI-1050A.1	11/17/10 15:32	13	H2-AI-1050B.1	11/17/10 15:32	5.7
H2-FIC-1111.1	11/17/10 15:33	0.867	H2-FIC-1104.1	11/17/10 15:33	13.2	H2-AI-1050A.1	11/17/10 15:33	13	H2-AI-1050B.1	11/17/10 15:33	5.1
H2-FIC-1111.1	11/17/10 15:34	0.867	H2-FIC-1104.1	11/17/10 15:34	13.5	H2-AI-1050A.1	11/17/10 15:34	13	H2-AI-1050B.1	11/17/10 15:34	5.7
H2-FIC-1111.1	11/17/10 15:35	0.866	H2-FIC-1104.1	11/17/10 15:35	12.8	H2-AI-1050A.1	11/17/10 15:35	13	H2-AI-1050B.1	11/17/10 15:35	5.1
H2-FIC-1111.1	11/17/10 15:36	0.866	H2-FIC-1104.1	11/17/10 15:36	13.4	H2-AI-1050A.1	11/17/10 15:36	13	H2-AI-1050B.1	11/17/10 15:36	5.4
H2-FIC-1111.1	11/17/10 15:37	0.866	H2-FIC-1104.1	11/17/10 15:37	13	H2-AI-1050A.1	11/17/10 15:37	13	H2-AI-1050B.1	11/17/10 15:37	4.5
H2-FIC-1111.1	11/17/10 15:38	0.865	H2-FIC-1104.1	11/17/10 15:38	13.1	H2-AI-1050A.1	11/17/10 15:38	13	H2-AI-1050B.1	11/17/10 15:38	4.8
H2-FIC-1111.1	11/17/10 15:39	0.865	H2-FIC-1104.1	11/17/10 15:39	13.2	H2-AI-1050A.1	11/17/10 15:39	13	H2-AI-1050B.1	11/17/10 15:39	4.5
H2-FIC-1111.1	11/17/10 15:40	0.864	H2-FIC-1104.1	11/17/10 15:40	13.3	H2-AI-1050A.1	11/17/10 15:40	13	H2-AI-1050B.1	11/17/10 15:40	4.9
H2-FIC-1111.1	11/17/10 15:41	0.864	H2-FIC-1104.1	11/17/10 15:41	13.5	H2-AI-1050A.1	11/17/10 15:41	13	H2-AI-1050B.1	11/17/10 15:41	4.6
H2-FIC-1111.1	11/17/10 15:42	0.864	H2-FIC-1104.1	11/17/10 15:42	13.6	H2-AI-1050A.1	11/17/10 15:42	13	H2-AI-1050B.1	11/17/10 15:42	5.2
H2-FIC-1111.1	11/17/10 15:43	0.863	H2-FIC-1104.1	11/17/10 15:43	13.8	H2-AI-1050A.1	11/17/10 15:43	13	H2-AI-1050B.1	11/17/10 15:43	5.3
H2-FIC-1111.1	11/17/10 15:44	0.863	H2-FIC-1104.1	11/17/10 15:44	13.9	H2-AI-1050A.1	11/17/10 15:44	13	H2-AI-1050B.1	11/17/10 15:44	4.8
H2-FIC-1111.1	11/17/10 15:45	0.863	H2-FIC-1104.1	11/17/10 15:45	13.6	H2-AI-1050A.1	11/17/10 15:45	13	H2-AI-1050B.1	11/17/10 15:45	5.4
H2-FIC-1111.1	11/17/10 15:46	0.862	H2-FIC-1104.1	11/17/10 15:46	12.8	H2-AI-1050A.1	11/17/10 15:46	13	H2-AI-1050B.1	11/17/10 15:46	5.1
H2-FIC-1111.1	11/17/10 15:47	0.862	H2-FIC-1104.1	11/17/10 15:47	13.3	H2-AI-1050A.1	11/17/10 15:47	13	H2-AI-1050B.1	11/17/10 15:47	5.8
H2-FIC-1111.1	11/17/10 15:48	0.862	H2-FIC-1104.1	11/17/10 15:48	12.8	H2-AI-1050A.1	11/17/10 15:48	13.1	H2-AI-1050B.1	11/17/10 15:48	5.2
H2-FIC-1111.1	11/17/10 15:49	0.861	H2-FIC-1104.1	11/17/10 15:49	12.8	H2-AI-1050A.1	11/17/10 15:49	13.1	H2-AI-1050B.1	11/17/10 15:49	5.2
H2-FIC-1111.1	11/17/10 15:50	0.861	H2-FIC-1104.1	11/17/10 15:50	12.9	H2-AI-1050A.1	11/17/10 15:50	13.1	H2-AI-1050B.1	11/17/10 15:50	4.4
H2-FIC-1111.1	11/17/10 15:51	0.861	H2-FIC-1104.1	11/17/10 15:51	12.8	H2-AI-1050A.1	11/17/10 15:51	13.1	H2-AI-1050B.1	11/17/10 15:51	5.3
H2-FIC-1111.1	11/17/10 15:52	0.86	H2-FIC-1104.1	11/17/10 15:52	12.8	H2-AI-1050A.1	11/17/10 15:52	13.1	H2-AI-1050B.1	11/17/10 15:52	5.1
H2-FIC-1111.1	11/17/10 15:53	0.86	H2-FIC-1104.1	11/17/10 15:53	12.7	H2-AI-1050A.1	11/17/10 15:53	13.1	H2-AI-1050B.1	11/17/10 15:53	4.9
H2-FIC-1111.1	11/17/10 15:54	0.859	H2-FIC-1104.1	11/17/10 15:54	12.9	H2-AI-1050A.1	11/17/10 15:54	13.1	H2-AI-1050B.1	11/17/10 15:54	4.5
H2-FIC-1111.1	11/17/10 15:55	0.859	H2-FIC-1104.1	11/17/10 15:55	13.5	H2-AI-1050A.1	11/17/10 15:55	13.1	H2-AI-1050B.1	11/17/10 15:55	4.2
H2-FIC-1111.1	11/17/10 15:56	0.859	H2-FIC-1104.1	11/17/10 15:56	13.4	H2-AI-1050A.1	11/17/10 15:56	13.1	H2-AI-1050B.1	11/17/10 15:56	4.6
H2-FIC-1111.1	11/17/10 15:57	0.858	H2-FIC-1104.1	11/17/10 15:57	13.1	H2-AI-1050A.1	11/17/10 15:57	13.1	H2-AI-1050B.1	11/17/10 15:57	4.1
H2-FIC-1111.1	11/17/10 15:58	0.858	H2-FIC-1104.1	11/17/10 15:58	13.5	H2-AI-1050A.1	11/17/10 15:58	13.1	H2-AI-1050B.1	11/17/10 15:58	5
H2-FIC-1111.1	11/17/10 15:59	0.858	H2-FIC-1104.1	11/17/10 15:59	12.7	H2-AI-1050A.1	11/17/10 15:59	13.1	H2-AI-1050B.1	11/17/10 15:59	4.3
H2-FIC-1111.1	11/17/10 16:00	0.858	H2-FIC-1104.1	11/17/10 16:00	13.4	H2-AI-1050A.1	11/17/10 16:00	13.1	H2-AI-1050B.1	11/17/10 16:00	5
H2-FIC-1111.1	11/17/10 16:01	0.858	H2-FIC-1104.1	11/17/10 16:01	13.4	H2-AI-1050A.1	11/17/10 16:01	13.1	H2-AI-1050B.1	11/17/10 16:01	4.7
H2-FIC-1111.1	11/17/10 16:02	0.858	H2-FIC-1104.1	11/17/10 16:02	13.4	H2-AI-1050A.1	11/17/10 16:02	13.1	H2-AI-1050B.1	11/17/10 16:02	5.3
H2-FIC-1111.1	11/17/10 16:03	0.858	H2-FIC-1104.1	11/17/10 16:03	13.4	H2-AI-1050A.1	11/17/10 16:03	13.1	H2-AI-1050B.1	11/17/10 16:03	5.7
H2-FIC-1111.1	11/17/10 16:04	0.858	H2-FIC-1104.1	11/17/10 16:04	13.4	H2-AI-1050A.1	11/17/10 16:04	13.1	H2-AI-1050B.1	11/17/10 16:04	6.1
H2-FIC-1111.1	11/17/10 16:05	0.858	H2-FIC-1104.1	11/17/10 16:05	13.4	H2-AI-1050A.1	11/17/10 16:05	13.1	H2-AI-1050B.1	11/17/10 16:05	5.6
H2-FIC-1111.1	11/17/10 16:06	0.858	H2-FIC-1104.1	11/17/10 16:06	13.2	H2-AI-1050A.1	11/17/10 16:06	13.1	H2-AI-1050B.1	11/17/10 16:06	5.6
H2-FIC-1111.1	11/17/10 16:07	0.858	H2-FIC-1104.1	11/17/10 16:07	12.7	H2-AI-1050A.1	11/17/10 16:07	13.3	H2-AI-1050B.1	11/17/10 16:07	5.6
H2-FIC-1111.1	11/17/10 16:08	0.858	H2-FIC-1104.1	11/17/10 16:08	13.4	H2-AI-1050A.1	11/17/10 16:08	14.1	H2-AI-1050B.1	11/17/10 16:08	5.5
H2-FIC-1111.1	11/17/10 16:09	0.858	H2-FIC-1104.1	11/17/10 16:09	13.5	H2-AI-1050A.1	11/17/10 16:09	14.1	H2-AI-1050B.1	11/17/10 16:09	5.3
H2-FIC-1111.1	11/17/10 16:10	0.858	H2-FIC-1104.1	11/17/10 16:10	13.1	H2-AI-1050A.1	11/17/10 16:10	14.2	H2-AI-1050B.1	11/17/10 16:10	4.8
H2-FIC-1111.1	11/17/10 16:11	0.858	H2-FIC-1104.1	11/17/10 16:11	13.5	H2-AI-1050A.1	11/17/10 16:11	14.2	H2-AI-1050B.1	11/17/10 16:11	5.3
H2-FIC-1111.1	11/17/10 16:12	0.858	H2-FIC-1104.1	11/17/10 16:12	12.7	H2-AI-1050A.1	11/17/10 16:12	14.2	H2-AI-1050B.1	11/17/10 16:12	4.4
H2-FIC-1111.1	11/17/10 16:13	0.858	H2-FIC-1104.1	11/17/10 16:13	13.5	H2-AI-1050A.1	11/17/10 16:13	14.3	H2-AI-1050B.1	11/17/10 16:13	5.4
H2-FIC-1111.1	11/17/10 16:14	0.858	H2-FIC-1104.1	11/17/10 16:14	13.1	H2-AI-1050A.1	11/17/10 16:14	14.3	H2-AI-1050B.1	11/17/10 16:14	4.9
H2-FIC-1111.1	11/17/10 16:15	0.858	H2-FIC-1104.1	11/17/10 16:15	13.1	H2-AI-1050A.1	11/17/10 16:15	14.3	H2-AI-1050B.1	11/17/10 16:15	5.2
H2-FIC-1111.1	11/17/10 16:16	0.858	H2-FIC-1104.1	11/17/10 16:16	13.2	H2-AI-1050A.1	11/17/10 16:16	14.3	H2-AI-1050B.1	11/17/10 16:16	5
H2-FIC-1111.1	11/17/10 16:17	0.858	H2-FIC-1104.1	11/17/10 16:17	13.2	H2-AI-1050A.1	11/17/10 16:17	14.4	H2-AI-1050B.1	11/17/10 16:17	5.8
H2-FIC-1111.1	11/17/10 16:18	0.858	H2-FIC-1104.1	11/17/10 16:18	13.2	H2-AI-1050A.1	11/17/10 16:18	14.4	H2-AI-1050B.1	11/17/10 16:18	5.5
H2-FIC-1111.1	11/17/10 16:19	0.858	H2-FIC-1104.1	11/17/10 16:19	13.3	H2-AI-1050A.1	11/17/10 16:19	14.2	H2-AI-1050B.1	11/17/10 16:19	5.3
H2-FIC-1111.1	11/17/10 16:20	0.858	H2-FIC-1104.1	11/17/10 16:20	13.3	H2-AI-1050A.1	11/17/10 16:20	14.1	H2-AI-1050B.1	11/17/10 16:20	5.4
H2-FIC-1111.1	11/17/10 16:21	0.858	H2-FIC-1104.1	11/17/10 16:21	13.5	H2-AI-1050A.1	11/17/10 16:21	14	H2-AI-1050B.1	11/17/10 16:21	5.5
H2-FIC-1111.1	11/17/10 16:22	0.858	H2-FIC-1104.1	11/17/10 16:22	13.7	H2-AI-1050A.1	11/17/10 16:22	11.1	H2-AI-1050B.1	11/17/10 16:22	9
H2-FIC-1111.1	11/17/10 16:23	0.858	H2-FIC-1104.1	11/17/10 16:23	12.9	H2-AI-1050A.1	11/17/10 16:23	1.5	H2-AI-1050B.1	11/17/10 16:23	21.1
H2-FIC-1111.1	11/17/10 16:24	0.858	H2-FIC-1104.1	11/17/10 16:24	13.6	H2-AI-1050A.1	11/17/10 16:24	1.6	H2-AI-1050B.1	11/17/10 16:24	21
H2-FIC-1111.1	11/17/10 16:25	0.858	H2-FIC-1104.1	11/17/10 16:25	12.8	H2-AI-1050A.1	11/17/10 16:25	1.7	H2-AI-1050B.1	11/17/10 16:25	21
H2-FIC-1111.1	11/17/10 16:26	0.858	H2-FIC-1104.1	11/17/10 16:26	13.4	H2-AI-1050A.1	11/17/10 16:26	12.2	H2-AI-1050B.1	11/17/10 16:26	16.7
H2-FIC-1111.1	11/17/10 16:27	0.858	H2-FIC-1104.1	11/17/10 16:27	13.4	H2-AI-1050A.1	11/17/10 16:27	50	H2-AI-1050B.1	11/17/10 16:27	0.8
H2-FIC-1111.1	11/17/10 16:28	0.858	H2-FIC-1104.1	11/17/10 16:28	13.3	H2-AI-1050A.1	11/17/10 16:28	50	H2-AI-1050B.1	11/17/10 16:28	0.8
H2-FIC-1111.1	11/17/10 16:29	0.858	H2-FIC-1104.1	11/17/10 16:29	13.3	H2-AI-1050A.1	11/17/10 16:29	39.3	H2-AI-1050B.1	11/17/10 16:29	5.2
H2-FIC-1111.1	11/17/10 16:30	0.858	H2-FIC-1104.1	11/17/10 16:30	13.1	H2-AI-1050A.1	11/17/10 16:30	2.8	H2-AI-1050B.1	11/17/10 16:30	17.3
H2-FIC-1111.1	11/17/10 16:31	0.858	H2-FIC-1104.1	11/17/10 16:31	12.9	H2-AI-1050A.1	11/17/10 16:31	12.7	H2-AI-1050B.1	11/17/10 16:31	4
H2-FIC-1111.1	11/17/10 16:32	0.858	H2-FIC-1104.1	11/17/10 16:32	13.5	H2-AI-1050A.1	11/17/10 16:32	13.4	H2-AI-1050B.1	11/17/10 16:32	4.3
H2-FIC-1111.1	11/17/10 16:33	0.858	H2-FIC-1104.1	11/17/10 16:33	13.4	H2-AI-1050A.1	11/17/10 16:33	13.9	H2-AI-1050B.1	11/17/10 16:33	4.5
H2-FIC-1111.1	11/17/10 16:34	0.858	H2-FIC-1104.1	11/17/10 16:34	13.5	H2-AI-1050A.1	11/17/10 16:34	13.5	H2-AI-1050B.1	11/17/10 16:34	4.2
H2-FIC-1111.1	11/17/10 16:35	0.858	H2-FIC-1104.1	11/17/10 16:35	13.9	H2-AI-1050A.1	11/17/10 16:35	12.6	H2-AI-1050B.1	11/17/10 16:35	5
H2-FIC-1111.1	11/17/10 16:36	0.858	H2-FIC-1104.1	11/17/10 16:36	12.7	H2-AI-1050A.1	11/17/10 16:36	13	H2-AI-1050B.1	11/17/10 16:36	4
H2-FIC-1111.1	11/17/10 16:37	0.858	H2-FIC-1104.1	11/17/10 16:37	13.5	H2-AI-1050A.1	11/17/10 16:37	13.5	H2-AI-1050B.1	11/17/10 16:37	4.9
H2-FIC-1111.1	11/17/10 16:38	0.858	H2-FIC-1104.1	11/17/10 16:38	13.1	H2-AI-1050A.1	11/17/10 16:38	13.9	H2-AI-1050B.1	11/17/10 16:38	4.2
H2-FIC-1111.1	11/17/10 16:39	0.858	H2-FIC-1104.1	11/17/10 16:39	13.2	H2-AI-1050A.1	11/17/10 16:39	13.7	H2-AI-1050B.1	11/17/10 16:39	4.8
H2-FIC-1111.1	11/17/10 16:40	0.858	H2-FIC-1104.1	11/17/10 16:40	13.2	H2-AI-1050A.1	11/17/10 16:40	13.6	H2-AI-1050B.1	11/17/10 16:40	4.2
H2-FIC-1111.1	11/17/10 16:41	0.858	H2-FIC-1104.1	11/17/10 16:41	13.3	H2-AI-1050A.1	11/17/10 16:41	13.5	H2-AI-1050B.1	11/17/10 16:41	4.3
H2-FIC-1111.1	11/17/10 16:42	0.858	H2-FIC-1104.1	11/17/10 16:42	13.4	H2-AI-1050A.1	11/17/10 16:42	13.4	H2-AI-1050B.1	11/17/10 16:42	4.3
H2-FIC-1111.1	11/17/10 16:43	0.858	H2-FIC-1104.1	11/17/10 16:43	13.3	H2-AI-1050A.1	11/17/10 16:43	13.3	H2-AI-1050B.1	11/17/10 16:43	4.2
H2-FIC-1111.1	11/17/10 16:44	0.858	H2-FIC-1104.1	11/17/10 16:44	12.8	H2-AI-1050A.1	11/17/10 16:44	13.6	H2-AI-1050B.1	11/17/10 16:44	3.6
H2-FIC-1111.1	11/17/10 16:45	0.858	H2-FIC-1104.1	11/17/10 16:45	13.7	H2-AI-1050A.1	11/17/10 16:45	14.8	H2-AI-1050B.1	11/17/10 16:45	3.8

HP2 Reformer

RFG Fuel Flow - MMSCFD			PSA OFFGAS Fuel Flow - MMSCFD			NOx - PPM			O2 - Percent		
tag	time	FG Flow MMSCFD, 1 min ave.	tag	time	FG Flow MMSCFD, 1 min ave.	tag	time	Nox (ppm), 1 min ave.	tag	time	O_2 (%), 1 min ave.
H2-FIC-1111.1	11/17/10 16:46	0.858	H2-FIC-1104.1	11/17/10 16:46	13.6	H2-AI-1050A.1	11/17/10 16:46	13.8	H2-AI-1050B.1	11/17/10 16:46	3.7
H2-FIC-1111.1	11/17/10 16:47	0.858	H2-FIC-1104.1	11/17/10 16:47	13.2	H2-AI-1050A.1	11/17/10 16:47	13.8	H2-AI-1050B.1	11/17/10 16:47	3.2
H2-FIC-1111.1	11/17/10 16:48	0.858	H2-FIC-1104.1	11/17/10 16:48	13.6	H2-AI-1050A.1	11/17/10 16:48	13.9	H2-AI-1050B.1	11/17/10 16:48	4.8
H2-FIC-1111.1	11/17/10 16:49	0.858	H2-FIC-1104.1	11/17/10 16:49	12.8	H2-AI-1050A.1	11/17/10 16:49	14	H2-AI-1050B.1	11/17/10 16:49	4.2
H2-FIC-1111.1	11/17/10 16:50	0.858	H2-FIC-1104.1	11/17/10 16:50	13.5	H2-AI-1050A.1	11/17/10 16:50	14	H2-AI-1050B.1	11/17/10 16:50	4.9
H2-FIC-1111.1	11/17/10 16:51	0.858	H2-FIC-1104.1	11/17/10 16:51	13.4	H2-AI-1050A.1	11/17/10 16:51	14.1	H2-AI-1050B.1	11/17/10 16:51	4.3
H2-FIC-1111.1	11/17/10 16:52	0.858	H2-FIC-1104.1	11/17/10 16:52	13.3	H2-AI-1050A.1	11/17/10 16:52	14.1	H2-AI-1050B.1	11/17/10 16:52	4.7
H2-FIC-1111.1	11/17/10 16:53	0.858	H2-FIC-1104.1	11/17/10 16:53	13.3	H2-AI-1050A.1	11/17/10 16:53	14.2	H2-AI-1050B.1	11/17/10 16:53	4.1
H2-FIC-1111.1	11/17/10 16:54	0.858	H2-FIC-1104.1	11/17/10 16:54	13.2	H2-AI-1050A.1	11/17/10 16:54	14.2	H2-AI-1050B.1	11/17/10 16:54	3.9
H2-FIC-1111.1	11/17/10 16:55	0.858	H2-FIC-1104.1	11/17/10 16:55	13.2	H2-AI-1050A.1	11/17/10 16:55	14.1	H2-AI-1050B.1	11/17/10 16:55	3.7
H2-FIC-1111.1	11/17/10 16:56	0.858	H2-FIC-1104.1	11/17/10 16:56	13.1	H2-AI-1050A.1	11/17/10 16:56	14.1	H2-AI-1050B.1	11/17/10 16:56	3.8
H2-FIC-1111.1	11/17/10 16:57	0.858	H2-FIC-1104.1	11/17/10 16:57	13.1	H2-AI-1050A.1	11/17/10 16:57	14.1	H2-AI-1050B.1	11/17/10 16:57	4.3
H2-FIC-1111.1	11/17/10 16:58	0.859	H2-FIC-1104.1	11/17/10 16:58	13.2	H2-AI-1050A.1	11/17/10 16:58	14.1	H2-AI-1050B.1	11/17/10 16:58	3.9
H2-FIC-1111.1	11/17/10 16:59	0.859	H2-FIC-1104.1	11/17/10 16:59	13.8	H2-AI-1050A.1	11/17/10 16:59	14.1	H2-AI-1050B.1	11/17/10 16:59	5.1
H2-FIC-1111.1	11/17/10 17:00	0.86	H2-FIC-1104.1	11/17/10 17:00	12.6	H2-AI-1050A.1	11/17/10 17:00	14.1	H2-AI-1050B.1	11/17/10 17:00	3.9
H2-FIC-1111.1	11/17/10 17:01	0.861	H2-FIC-1104.1	11/17/10 17:01	13.3	H2-AI-1050A.1	11/17/10 17:01	14.1	H2-AI-1050B.1	11/17/10 17:01	4.1
H2-FIC-1111.1	11/17/10 17:02	0.861	H2-FIC-1104.1	11/17/10 17:02	13.3	H2-AI-1050A.1	11/17/10 17:02	14.1	H2-AI-1050B.1	11/17/10 17:02	3.3
H2-FIC-1111.1	11/17/10 17:03	0.862	H2-FIC-1104.1	11/17/10 17:03	13.3	H2-AI-1050A.1	11/17/10 17:03	14.1	H2-AI-1050B.1	11/17/10 17:03	4
H2-FIC-1111.1	11/17/10 17:04	0.863	H2-FIC-1104.1	11/17/10 17:04	13.3	H2-AI-1050A.1	11/17/10 17:04	14.1	H2-AI-1050B.1	11/17/10 17:04	3.6
H2-FIC-1111.1	11/17/10 17:05	0.863	H2-FIC-1104.1	11/17/10 17:05	13.3	H2-AI-1050A.1	11/17/10 17:05	14.1	H2-AI-1050B.1	11/17/10 17:05	4.2
H2-FIC-1111.1	11/17/10 17:06	0.864	H2-FIC-1104.1	11/17/10 17:06	13.3	H2-AI-1050A.1	11/17/10 17:06	14.1	H2-AI-1050B.1	11/17/10 17:06	3.5
H2-FIC-1111.1	11/17/10 17:07	0.865	H2-FIC-1104.1	11/17/10 17:07	13.3	H2-AI-1050A.1	11/17/10 17:07	14	H2-AI-1050B.1	11/17/10 17:07	4
H2-FIC-1111.1	11/17/10 17:08	0.865	H2-FIC-1104.1	11/17/10 17:08	13.3	H2-AI-1050A.1	11/17/10 17:08	14	H2-AI-1050B.1	11/17/10 17:08	3.6
H2-FIC-1111.1	11/17/10 17:09	0.866	H2-FIC-1104.1	11/17/10 17:09	13.4	H2-AI-1050A.1	11/17/10 17:09	14	H2-AI-1050B.1	11/17/10 17:09	3.6
H2-FIC-1111.1	11/17/10 17:10	0.867	H2-FIC-1104.1	11/17/10 17:10	13.8	H2-AI-1050A.1	11/17/10 17:10	14	H2-AI-1050B.1	11/17/10 17:10	4.3
H2-FIC-1111.1	11/17/10 17:11	0.867	H2-FIC-1104.1	11/17/10 17:11	12.6	H2-AI-1050A.1	11/17/10 17:11	13.9	H2-AI-1050B.1	11/17/10 17:11	3.6
H2-FIC-1111.1	11/17/10 17:12	0.868	H2-FIC-1104.1	11/17/10 17:12	13.5	H2-AI-1050A.1	11/17/10 17:12	13.3	H2-AI-1050B.1	11/17/10 17:12	5.1
H2-FIC-1111.1	11/17/10 17:13	0.869	H2-FIC-1104.1	11/17/10 17:13	13	H2-AI-1050A.1	11/17/10 17:13	12.8	H2-AI-1050B.1	11/17/10 17:13	4.4
H2-FIC-1111.1	11/17/10 17:14	0.869	H2-FIC-1104.1	11/17/10 17:14	13	H2-AI-1050A.1	11/17/10 17:14	13.1	H2-AI-1050B.1	11/17/10 17:14	4.9
H2-FIC-1111.1	11/17/10 17:15	0.87	H2-FIC-1104.1	11/17/10 17:15	13	H2-AI-1050A.1	11/17/10 17:15	13.3	H2-AI-1050B.1	11/17/10 17:15	4.4
H2-FIC-1111.1	11/17/10 17:16	0.871	H2-FIC-1104.1	11/17/10 17:16	12.9	H2-AI-1050A.1	11/17/10 17:16	13.5	H2-AI-1050B.1	11/17/10 17:16	4.4
H2-FIC-1111.1	11/17/10 17:17	0.871	H2-FIC-1104.1	11/17/10 17:17	13	H2-AI-1050A.1	11/17/10 17:17	13.7	H2-AI-1050B.1	11/17/10 17:17	4.3
H2-FIC-1111.1	11/17/10 17:18	0.872	H2-FIC-1104.1	11/17/10 17:18	13.4	H2-AI-1050A.1	11/17/10 17:18	13.7	H2-AI-1050B.1	11/17/10 17:18	4.3
H2-FIC-1111.1	11/17/10 17:19	0.873	H2-FIC-1104.1	11/17/10 17:19	12.9	H2-AI-1050A.1	11/17/10 17:19	13.6	H2-AI-1050B.1	11/17/10 17:19	4.1
H2-FIC-1111.1	11/17/10 17:20	0.873	H2-FIC-1104.1	11/17/10 17:20	13.5	H2-AI-1050A.1	11/17/10 17:20	13.6	H2-AI-1050B.1	11/17/10 17:20	3.7
H2-FIC-1111.1	11/17/10 17:21	0.874	H2-FIC-1104.1	11/17/10 17:21	13.8	H2-AI-1050A.1	11/17/10 17:21	13.5	H2-AI-1050B.1	11/17/10 17:21	4.3
H2-FIC-1111.1	11/17/10 17:22	0.875	H2-FIC-1104.1	11/17/10 17:22	12.9	H2-AI-1050A.1	11/17/10 17:22	13.4	H2-AI-1050B.1	11/17/10 17:22	3.4
H2-FIC-1111.1	11/17/10 17:23	0.876	H2-FIC-1104.1	11/17/10 17:23	13.5	H2-AI-1050A.1	11/17/10 17:23	13.4	H2-AI-1050B.1	11/17/10 17:23	4.4
H2-FIC-1111.1	11/17/10 17:24	0.876	H2-FIC-1104.1	11/17/10 17:24	12.8	H2-AI-1050A.1	11/17/10 17:24	13.3	H2-AI-1050B.1	11/17/10 17:24	3.5
H2-FIC-1111.1	11/17/10 17:25	0.877	H2-FIC-1104.1	11/17/10 17:25	13.3	H2-AI-1050A.1	11/17/10 17:25	13.3	H2-AI-1050B.1	11/17/10 17:25	4.4
H2-FIC-1111.1	11/17/10 17:26	0.878	H2-FIC-1104.1	11/17/10 17:26	13.3	H2-AI-1050A.1	11/17/10 17:26	13.2	H2-AI-1050B.1	11/17/10 17:26	3.9
H2-FIC-1111.1	11/17/10 17:27	0.878	H2-FIC-1104.1	11/17/10 17:27	13.2	H2-AI-1050A.1	11/17/10 17:27	13.2	H2-AI-1050B.1	11/17/10 17:27	4.6
H2-FIC-1111.1	11/17/10 17:28	0.879	H2-FIC-1104.1	11/17/10 17:28	13.2	H2-AI-1050A.1	11/17/10 17:28	13.1	H2-AI-1050B.1	11/17/10 17:28	4.1
H2-FIC-1111.1	11/17/10 17:29	0.88	H2-FIC-1104.1	11/17/10 17:29	13.1	H2-AI-1050A.1	11/17/10 17:29	13	H2-AI-1050B.1	11/17/10 17:29	4.5
H2-FIC-1111.1	11/17/10 17:30	0.88	H2-FIC-1104.1	11/17/10 17:30	13.1	H2-AI-1050A.1	11/17/10 17:30	13	H2-AI-1050B.1	11/17/10 17:30	4.2
H2-FIC-1111.1	11/17/10 17:31	0.881	H2-FIC-1104.1	11/17/10 17:31	13.1	H2-AI-1050A.1	11/17/10 17:31	12.9	H2-AI-1050B.1	11/17/10 17:31	4.7
H2-FIC-1111.1	11/17/10 17:32	0.882	H2-FIC-1104.1	11/17/10 17:32	13.1	H2-AI-1050A.1	11/17/10 17:32	12.9	H2-AI-1050B.1	11/17/10 17:32	5
H2-FIC-1111.1	11/17/10 17:33	0.882	H2-FIC-1104.1	11/17/10 17:33	13.2	H2-AI-1050A.1	11/17/10 17:33	12.8	H2-AI-1050B.1	11/17/10 17:33	4.5
H2-FIC-1111.1	11/17/10 17:34	0.883	H2-FIC-1104.1	11/17/10 17:34	13.7	H2-AI-1050A.1	11/17/10 17:34	12.8	H2-AI-1050B.1	11/17/10 17:34	5.2
H2-FIC-1111.1	11/17/10 17:35	0.884	H2-FIC-1104.1	11/17/10 17:35	12.6	H2-AI-1050A.1	11/17/10 17:35	12.8	H2-AI-1050B.1	11/17/10 17:35	4.4
H2-FIC-1111.1	11/17/10 17:36	0.884	H2-FIC-1104.1	11/17/10 17:36	13.3	H2-AI-1050A.1	11/17/10 17:36	12.8	H2-AI-1050B.1	11/17/10 17:36	5.3
H2-FIC-1111.1	11/17/10 17:37	0.885	H2-FIC-1104.1	11/17/10 17:37	12.8	H2-AI-1050A.1	11/17/10 17:37	12.8	H2-AI-1050B.1	11/17/10 17:37	4.6
H2-FIC-1111.1	11/17/10 17:38	0.886	H2-FIC-1104.1	11/17/10 17:38	13.4	H2-AI-1050A.1	11/17/10 17:38	12.8	H2-AI-1050B.1	11/17/10 17:38	4.6
H2-FIC-1111.1	11/17/10 17:39	0.886	H2-FIC-1104.1	11/17/10 17:39	13.4	H2-AI-1050A.1	11/17/10 17:39	12.9	H2-AI-1050B.1	11/17/10 17:39	4
H2-FIC-1111.1	11/17/10 17:40	0.887	H2-FIC-1104.1	11/17/10 17:40	13.3	H2-AI-1050A.1	11/17/10 17:40	12.9	H2-AI-1050B.1	11/17/10 17:40	4.6
H2-FIC-1111.1	11/17/10 17:41	0.888	H2-FIC-1104.1	11/17/10 17:41	13.3	H2-AI-1050A.1	11/17/10 17:41	12.9	H2-AI-1050B.1	11/17/10 17:41	4.1
H2-FIC-1111.1	11/17/10 17:42	0.888	H2-FIC-1104.1	11/17/10 17:42	13.3	H2-AI-1050A.1	11/17/10 17:42	12.9	H2-AI-1050B.1	11/17/10 17:42	4.6
H2-FIC-1111.1	11/17/10 17:43	0.889	H2-FIC-1104.1	11/17/10 17:43	12.8	H2-AI-1050A.1	11/17/10 17:43	12.9	H2-AI-1050B.1	11/17/10 17:43	4.6
H2-FIC-1111.1	11/17/10 17:44	0.89	H2-FIC-1104.1	11/17/10 17:44	13.4	H2-AI-1050A.1	11/17/10 17:44	12.9	H2-AI-1050B.1	11/17/10 17:44	4.7
H2-FIC-1111.1	11/17/10 17:45	0.89	H2-FIC-1104.1	11/17/10 17:45	13.7	H2-AI-1050A.1	11/17/10 17:45	12.9	H2-AI-1050B.1	11/17/10 17:45	4.5
H2-FIC-1111.1	11/17/10 17:46	0.891	H2-FIC-1104.1	11/17/10 17:46	13.1	H2-AI-1050A.1	11/17/10 17:46	12.9	H2-AI-1050B.1	11/17/10 17:46	3.7
H2-FIC-1111.1	11/17/10 17:47	0.892	H2-FIC-1104.1	11/17/10 17:47	13.6	H2-AI-1050A.1	11/17/10 17:47	12.9	H2-AI-1050B.1	11/17/10 17:47	4.7
H2-FIC-1111.1	11/17/10 17:48	0.892	H2-FIC-1104.1	11/17/10 17:48	12.7	H2-AI-1050A.1	11/17/10 17:48	12.9	H2-AI-1050B.1	11/17/10 17:48	4.4
H2-FIC-1111.1	11/17/10 17:49	0.893	H2-FIC-1104.1	11/17/10 17:49	13.4	H2-AI-1050A.1	11/17/10 17:49	12.9	H2-AI-1050B.1	11/17/10 17:49	5.2
H2-FIC-1111.1	11/17/10 17:50	0.894	H2-FIC-1104.1	11/17/10 17:50	12.9	H2-AI-1050A.1	11/17/10 17:50	12.9	H2-AI-1050B.1	11/17/10 17:50	4.6
H2-FIC-1111.1	11/17/10 17:51	0.894	H2-FIC-1104.1	11/17/10 17:51	13.2	H2-AI-1050A.1	11/17/10 17:51	12.9	H2-AI-1050B.1	11/17/10 17:51	5.4
H2-FIC-1111.1	11/17/10 17:52	0.895	H2-FIC-1104.1	11/17/10 17:52	12.8	H2-AI-1050A.1	11/17/10 17:52	12.9	H2-AI-1050B.1	11/17/10 17:52	4.9
H2-FIC-1111.1	11/17/10 17:53	0.896	H2-FIC-1104.1	11/17/10 17:53	12.8	H2-AI-1050A.1	11/17/10 17:53	12.9	H2-AI-1050B.1	11/17/10 17:53	5.1
H2-FIC-1111.1	11/17/10 17:54	0.896	H2-FIC-1104.1	11/17/10 17:54	12.9	H2-AI-1050A.1	11/17/10 17:54	12.9	H2-AI-1050B.1	11/17/10 17:54	4.2
H2-FIC-1111.1	11/17/10 17:55	0.897	H2-FIC-1104.1	11/17/10 17:55	13.3	H2-AI-1050A.1	11/17/10 17:55	12.9	H2-AI-1050B.1	11/17/10 17:55	4.1
H2-FIC-1111.1	11/17/10 17:56	0.896	H2-FIC-1104.1	11/17/10 17:56	12.8	H2-AI-1050A.1	11/17/10 17:56	12.9	H2-AI-1050B.1	11/17/10 17:56	4
H2-FIC-1111.1	11/17/10 17:57	0.886	H2-FIC-1104.1	11/17/10 17:57	13.4	H2-AI-1050A.1	11/17/10 17:57	12.9	H2-AI-1050B.1	11/17/10 17:57	3.6
H2-FIC-1111.1	11/17/10 17:58	0.876	H2-FIC-1104.1	11/17/10 17:58	13.7	H2-AI-1050A.1	11/17/10 17:58	12.9	H2-AI-1050B.1	11/17/10 17:58	4.1
H2-FIC-1111.1	11/17/10 17:59	0.866	H2-FIC-1104.1	11/17/10 17:59	13	H2-AI-1050A.1	11/17/10 17:59	12.9	H2-AI-1050B.1	11/17/10 17:59	3.3
H2-FIC-1111.1	11/17/10 18:00	0.856	H2-FIC-1104.1	11/17/10 18:00	13.5	H2-AI-1050A.1	11/17/10 18:00	12.9	H2-AI-1050B.1	11/17/10 18:00	4.5
H2-FIC-1111.1	11/17/10 18:01	0.847	H2-FIC-1104.1	11/17/10 18:01	12.7	H2-AI-1050A.1	11/17/10 18:01	12.9	H2-AI-1050B.1	11/17/10 18:01	3.7
H2-FIC-1111.1	11/17/10 18:02	0.847	H2-FIC-1104.1	11/17/10 18:02	13.3	H2-AI-1050A.1	11/17/10 18:02	13	H2-AI-1050B.1	11/17/10 18:02	5.1
H2-FIC-1111.1	11/17/10 18:03	0.848	H2-FIC-1104.1	11/17/10 18:03	13.3	H2-AI-1050A.1	11/17/10 18:03	13	H2-AI-1050B.1	11/17/10 18:03	4.6
H2-FIC-1111.1	11/17/10 18:04	0.848	H2-FIC-1104.1	11/17/10 18:04	13.3	H2-AI-1050A.1	11/17/10 18:04	13	H2-AI-1050B.1	11/17/10 18:04	5.2
H2-FIC-1111.1	11/17/10 18:05	0.848	H2-FIC-1104.1	11/17/10 18:05	13.3	H2-AI-1050A.1	11/17/10 18:05	13	H2-AI-1050B.1	11/17/10 18:05	4.7
H2-FIC-1111.1	11/17/10 18:06	0.849	H2-FIC-1104.1	11/17/10 18:06	13.3	H2-AI-1050A.1	11/17/10 18:06	13	H2-AI-1050B.1	11/17/10 18:06	5.1
H2-FIC-1111.1	11/17/10 18:07	0.849	H2-FIC-1104.1	11/17/10 18:07	12.8	H2-AI-1050A.1	11/17/10 18:07	13	H2-AI-1050B.1	11/17/10 18:07	4.3
H2-FIC-1111.1	11/17/10 18:08	0.849	H2-FIC-1104.1	11/17/10 18:08	13.4	H2-AI-1050A.1	11/17/10 18:08	13	H2-AI-1050B.1	11/17/10 18:08	4.4
H2-FIC-1111.1	11/17/10 18:09	0.85	H2-FIC-1104.1	11/17/10 18:09	13.3	H2-AI-1050A.1	11/17/10 18:09	13	H2-AI-1050B.1	11/17/10 18:09	4.5
H2-FIC-1111.1	11/17/10 18:10	0.85	H2-FIC-1104.1	11/17/10 18:10	13.4	H2-AI-1050A.1	11/17/10 18:10	13	H2-AI-1050B.1	11/17/10 18:10	4.7
H2-FIC-1111.1	11/17/10 18:11	0.85	H2-FIC-1104.1	11/17/10 18:11	13.9	H2-AI-1050A.1	11/17/10 18:11	13	H2-AI-1050B.1	11/17/10 18:11	4.6
H2-FIC-1111.1	11/17/10 18:12	0.851	H2-FIC-1104.1	11/17/10 18:12	12.6	H2-AI-1050A.1	11/17/10 18:12	13	H2-AI-1050B.1	11/17/10 18:12	3.5
H2-FIC-1111.1	11/17/10 18:13	0.851	H2-FIC-1104.1	11/17/10 18:13	13.5	H2-AI-1050A.1	11/17/10 18:13	13	H2-AI-1050B.1	11/17/10 18:13	4.7
H2-FIC-1111.1	11/17/10 18:14	0.851	H2-FIC-1104.1	11/17/10 18:14	12.9	H2-AI-1050A.1	11/17/10 18:14	13	H2-AI-1050B.1	11/17/10 18:14	4
H2-FIC-1111.1	11/17/10 18:15	0.852	H2-FIC-1104.1	11/17/10 18:15	13.4	H2-AI-1050A.1	11/17/10 18:15	13	H2-AI-1050B.1	11/17/10 18:15	5.1
H2-FIC-1111.1	11/17/10 18:16	0.852	H2-FIC-1104.1	11/17/10 18:16	12.8	H2-AI-1050A.1	11/17/10 18:16	13	H2-AI-1050B.1	11/17/10 18:16	4.7

HP2 Reformer

RFG Fuel Flow - MMSCFD			PSA OFFGAS Fuel Flow - MMSCFD			NOx - PPM			O2 - Percent		
tag	time	FG Flow MMSCFD, 1 min ave.	tag	time	FG Flow MMSCFD, 1 min ave.	tag	time	Nox (ppm), 1 min ave.	tag	time	O_2 (%), 1 min ave.
H2-FIC-1111.1	11/17/10 18:17	0.852	H2-FIC-1104.1	11/17/10 18:17	12.9	H2-AI-1050A.1	11/17/10 18:17	13	H2-AI-1050B.1	11/17/10 18:17	5.1
H2-FIC-1111.1	11/17/10 18:18	0.853	H2-FIC-1104.1	11/17/10 18:18	12.9	H2-AI-1050A.1	11/17/10 18:18	13	H2-AI-1050B.1	11/17/10 18:18	3.9
H2-FIC-1111.1	11/17/10 18:19	0.853	H2-FIC-1104.1	11/17/10 18:19	12.7	H2-AI-1050A.1	11/17/10 18:19	13	H2-AI-1050B.1	11/17/10 18:19	3.8
H2-FIC-1111.1	11/17/10 18:20	0.853	H2-FIC-1104.1	11/17/10 18:20	12.7	H2-AI-1050A.1	11/17/10 18:20	13	H2-AI-1050B.1	11/17/10 18:20	3.8
H2-FIC-1111.1	11/17/10 18:21	0.854	H2-FIC-1104.1	11/17/10 18:21	13.6	H2-AI-1050A.1	11/17/10 18:21	13	H2-AI-1050B.1	11/17/10 18:21	3.7
H2-FIC-1111.1	11/17/10 18:22	0.854	H2-FIC-1104.1	11/17/10 18:22	13.6	H2-AI-1050A.1	11/17/10 18:22	13	H2-AI-1050B.1	11/17/10 18:22	3.6
H2-FIC-1111.1	11/17/10 18:23	0.854	H2-FIC-1104.1	11/17/10 18:23	13.1	H2-AI-1050A.1	11/17/10 18:23	13	H2-AI-1050B.1	11/17/10 18:23	3.7
H2-FIC-1111.1	11/17/10 18:24	0.855	H2-FIC-1104.1	11/17/10 18:24	13.7	H2-AI-1050A.1	11/17/10 18:24	13	H2-AI-1050B.1	11/17/10 18:24	4.7
H2-FIC-1111.1	11/17/10 18:25	0.855	H2-FIC-1104.1	11/17/10 18:25	12.6	H2-AI-1050A.1	11/17/10 18:25	13.1	H2-AI-1050B.1	11/17/10 18:25	4
H2-FIC-1111.1	11/17/10 18:26	0.856	H2-FIC-1104.1	11/17/10 18:26	13.4	H2-AI-1050A.1	11/17/10 18:26	13.1	H2-AI-1050B.1	11/17/10 18:26	4.8
H2-FIC-1111.1	11/17/10 18:27	0.856	H2-FIC-1104.1	11/17/10 18:27	12.9	H2-AI-1050A.1	11/17/10 18:27	13.1	H2-AI-1050B.1	11/17/10 18:27	4.5
H2-FIC-1111.1	11/17/10 18:28	0.856	H2-FIC-1104.1	11/17/10 18:28	12.8	H2-AI-1050A.1	11/17/10 18:28	13.1	H2-AI-1050B.1	11/17/10 18:28	5.4
H2-FIC-1111.1	11/17/10 18:29	0.857	H2-FIC-1104.1	11/17/10 18:29	12.8	H2-AI-1050A.1	11/17/10 18:29	13.1	H2-AI-1050B.1	11/17/10 18:29	4.6
H2-FIC-1111.1	11/17/10 18:30	0.857	H2-FIC-1104.1	11/17/10 18:30	12.8	H2-AI-1050A.1	11/17/10 18:30	13.1	H2-AI-1050B.1	11/17/10 18:30	5.2
H2-FIC-1111.1	11/17/10 18:31	0.857	H2-FIC-1104.1	11/17/10 18:31	12.8	H2-AI-1050A.1	11/17/10 18:31	13.1	H2-AI-1050B.1	11/17/10 18:31	4.6
H2-FIC-1111.1	11/17/10 18:32	0.858	H2-FIC-1104.1	11/17/10 18:32	13.2	H2-AI-1050A.1	11/17/10 18:32	13.1	H2-AI-1050B.1	11/17/10 18:32	4.5
H2-FIC-1111.1	11/17/10 18:33	0.858	H2-FIC-1104.1	11/17/10 18:33	12.6	H2-AI-1050A.1	11/17/10 18:33	13.1	H2-AI-1050B.1	11/17/10 18:33	4.3
H2-FIC-1111.1	11/17/10 18:34	0.858	H2-FIC-1104.1	11/17/10 18:34	13.5	H2-AI-1050A.1	11/17/10 18:34	13.1	H2-AI-1050B.1	11/17/10 18:34	3.7
H2-FIC-1111.1	11/17/10 18:35	0.859	H2-FIC-1104.1	11/17/10 18:35	13.6	H2-AI-1050A.1	11/17/10 18:35	13.1	H2-AI-1050B.1	11/17/10 18:35	5
H2-FIC-1111.1	11/17/10 18:36	0.859	H2-FIC-1104.1	11/17/10 18:36	12.9	H2-AI-1050A.1	11/17/10 18:36	13.1	H2-AI-1050B.1	11/17/10 18:36	3.5
H2-FIC-1111.1	11/17/10 18:37	0.859	H2-FIC-1104.1	11/17/10 18:37	13.8	H2-AI-1050A.1	11/17/10 18:37	13.1	H2-AI-1050B.1	11/17/10 18:37	4.8
H2-FIC-1111.1	11/17/10 18:38	0.86	H2-FIC-1104.1	11/17/10 18:38	12.7	H2-AI-1050A.1	11/17/10 18:38	13.1	H2-AI-1050B.1	11/17/10 18:38	3.4
H2-FIC-1111.1	11/17/10 18:39	0.86	H2-FIC-1104.1	11/17/10 18:39	13.4	H2-AI-1050A.1	11/17/10 18:39	13.1	H2-AI-1050B.1	11/17/10 18:39	5.3
H2-FIC-1111.1	11/17/10 18:40	0.86	H2-FIC-1104.1	11/17/10 18:40	12.9	H2-AI-1050A.1	11/17/10 18:40	13.1	H2-AI-1050B.1	11/17/10 18:40	4.1
H2-FIC-1111.1	11/17/10 18:41	0.861	H2-FIC-1104.1	11/17/10 18:41	12.8	H2-AI-1050A.1	11/17/10 18:41	13.1	H2-AI-1050B.1	11/17/10 18:41	4.7
H2-FIC-1111.1	11/17/10 18:42	0.861	H2-FIC-1104.1	11/17/10 18:42	12.8	H2-AI-1050A.1	11/17/10 18:42	13.1	H2-AI-1050B.1	11/17/10 18:42	4.1
H2-FIC-1111.1	11/17/10 18:43	0.861	H2-FIC-1104.1	11/17/10 18:43	12.7	H2-AI-1050A.1	11/17/10 18:43	13.1	H2-AI-1050B.1	11/17/10 18:43	4.8
H2-FIC-1111.1	11/17/10 18:44	0.862	H2-FIC-1104.1	11/17/10 18:44	12.7	H2-AI-1050A.1	11/17/10 18:44	13.1	H2-AI-1050B.1	11/17/10 18:44	4.2
H2-FIC-1111.1	11/17/10 18:45	0.862	H2-FIC-1104.1	11/17/10 18:45	13.4	H2-AI-1050A.1	11/17/10 18:45	13.1	H2-AI-1050B.1	11/17/10 18:45	4.1
H2-FIC-1111.1	11/17/10 18:46	0.862	H2-FIC-1104.1	11/17/10 18:46	12.8	H2-AI-1050A.1	11/17/10 18:46	13.1	H2-AI-1050B.1	11/17/10 18:46	4.1
H2-FIC-1111.1	11/17/10 18:47	0.863	H2-FIC-1104.1	11/17/10 18:47	13.5	H2-AI-1050A.1	11/17/10 18:47	13.1	H2-AI-1050B.1	11/17/10 18:47	4.1
H2-FIC-1111.1	11/17/10 18:48	0.863	H2-FIC-1104.1	11/17/10 18:48	13.9	H2-AI-1050A.1	11/17/10 18:48	13.2	H2-AI-1050B.1	11/17/10 18:48	5.1
H2-FIC-1111.1	11/17/10 18:49	0.864	H2-FIC-1104.1	11/17/10 18:49	12.6	H2-AI-1050A.1	11/17/10 18:49	13.2	H2-AI-1050B.1	11/17/10 18:49	3.6
H2-FIC-1111.1	11/17/10 18:50	0.864	H2-FIC-1104.1	11/17/10 18:50	13.6	H2-AI-1050A.1	11/17/10 18:50	13.2	H2-AI-1050B.1	11/17/10 18:50	4.7
H2-FIC-1111.1	11/17/10 18:51	0.864	H2-FIC-1104.1	11/17/10 18:51	12.7	H2-AI-1050A.1	11/17/10 18:51	13.2	H2-AI-1050B.1	11/17/10 18:51	3.7
H2-FIC-1111.1	11/17/10 18:52	0.865	H2-FIC-1104.1	11/17/10 18:52	13.4	H2-AI-1050A.1	11/17/10 18:52	13.2	H2-AI-1050B.1	11/17/10 18:52	4.5
H2-FIC-1111.1	11/17/10 18:53	0.865	H2-FIC-1104.1	11/17/10 18:53	13.3	H2-AI-1050A.1	11/17/10 18:53	13.2	H2-AI-1050B.1	11/17/10 18:53	3.8
	Average	0.865			13.194						

	RFG	PSA OFFGAS	PSA OFFGAS
Sample Date/Time	11/17/2010 07:30	11/16/2010 09:50	11/18/2010 10:35
Sample Id	1080920	1080561	1081376
sp grav,calc	0.5256	0.7432	0.7852
(LHV) Net Heat BTU/FT3	873.5	233.7	231.6
H2	31.88	44.46	41
C1	54.24	10.95	11.7
C2	4.56	0	0
C2=	0.27	0	0
C3	4.13	0	0
C3=	0.51	0	0
H2S	0	0	0
IC4	0.9	0	0
NC4	1.28	0	0
IC4=	0.53	0	0
C5=	0.03	0	0
IC5	0.3	0	0
NC5	0.22	0	0
C6 plus	0.16	0	0
CO2	0.1	39.91	42.45
O2	0	0	0
N2	0.9	0.83	0.82
CO	0	3.85	4.03
(HHV) Gross Heat BTU/FT3	969.1	267.1	264
MW gas	14.9306	21.3543	22.5786
Kg C/Kg-mol gas	11.0984	6.5644	6.9813
Kg C/Kg Gas	0.7433	0.3074	0.3092
Kg CO2/MMBTU	49.4335	106.0877	114.1452
=100%,calc	100	100	100

HP2 Reformer

Fuel Flow - (RFG) MMSCFD			Fuel Flow - (PSA OFFGAS) MMSCFD			NOx - PPM			O2 - Percent		
tag	time	FG Flow MMSCFD, 1 min ave.	tag	time	FG Flow MMSCFD, 1 min ave.	tag	time	Nox (ppm), 1 min ave.	tag	time	O_2 (%), 1 min ave.
H2-FIC-1111.1	11/18/10 14:00	0.935	H2-FIC-1104.1	11/18/10 14:00	13.3	H2-AI-1050A.1	11/18/10 14:00	12.6	H2-AI-1050B.1	11/18/10 14:00	2.2
H2-FIC-1111.1	11/18/10 14:01	0.935	H2-FIC-1104.1	11/18/10 14:01	13.4	H2-AI-1050A.1	11/18/10 14:01	12.6	H2-AI-1050B.1	11/18/10 14:01	3.1
H2-FIC-1111.1	11/18/10 14:02	0.935	H2-FIC-1104.1	11/18/10 14:02	13.4	H2-AI-1050A.1	11/18/10 14:02	12.6	H2-AI-1050B.1	11/18/10 14:02	2
H2-FIC-1111.1	11/18/10 14:03	0.935	H2-FIC-1104.1	11/18/10 14:03	13.6	H2-AI-1050A.1	11/18/10 14:03	12.6	H2-AI-1050B.1	11/18/10 14:03	3
H2-FIC-1111.1	11/18/10 14:04	0.936	H2-FIC-1104.1	11/18/10 14:04	13	H2-AI-1050A.1	11/18/10 14:04	12.6	H2-AI-1050B.1	11/18/10 14:04	2
H2-FIC-1111.1	11/18/10 14:05	0.936	H2-FIC-1104.1	11/18/10 14:05	13.7	H2-AI-1050A.1	11/18/10 14:05	12.6	H2-AI-1050B.1	11/18/10 14:05	3
H2-FIC-1111.1	11/18/10 14:06	0.936	H2-FIC-1104.1	11/18/10 14:06	12.6	H2-AI-1050A.1	11/18/10 14:06	12.6	H2-AI-1050B.1	11/18/10 14:06	2.1
H2-FIC-1111.1	11/18/10 14:07	0.936	H2-FIC-1104.1	11/18/10 14:07	13.5	H2-AI-1050A.1	11/18/10 14:07	12.6	H2-AI-1050B.1	11/18/10 14:07	3.2
H2-FIC-1111.1	11/18/10 14:08	0.936	H2-FIC-1104.1	11/18/10 14:08	12.5	H2-AI-1050A.1	11/18/10 14:08	12.6	H2-AI-1050B.1	11/18/10 14:08	2.3
H2-FIC-1111.1	11/18/10 14:09	0.936	H2-FIC-1104.1	11/18/10 14:09	13.2	H2-AI-1050A.1	11/18/10 14:09	12.6	H2-AI-1050B.1	11/18/10 14:09	3.3
H2-FIC-1111.1	11/18/10 14:10	0.937	H2-FIC-1104.1	11/18/10 14:10	12.4	H2-AI-1050A.1	11/18/10 14:10	12.6	H2-AI-1050B.1	11/18/10 14:10	2.2
H2-FIC-1111.1	11/18/10 14:11	0.937	H2-FIC-1104.1	11/18/10 14:11	13.1	H2-AI-1050A.1	11/18/10 14:11	12.6	H2-AI-1050B.1	11/18/10 14:11	3.2
H2-FIC-1111.1	11/18/10 14:12	0.937	H2-FIC-1104.1	11/18/10 14:12	12.6	H2-AI-1050A.1	11/18/10 14:12	12.6	H2-AI-1050B.1	11/18/10 14:12	2.3
H2-FIC-1111.1	11/18/10 14:13	0.937	H2-FIC-1104.1	11/18/10 14:13	13	H2-AI-1050A.1	11/18/10 14:13	12.6	H2-AI-1050B.1	11/18/10 14:13	3.1
H2-FIC-1111.1	11/18/10 14:14	0.937	H2-FIC-1104.1	11/18/10 14:14	13	H2-AI-1050A.1	11/18/10 14:14	12.6	H2-AI-1050B.1	11/18/10 14:14	2.5
H2-FIC-1111.1	11/18/10 14:15	0.937	H2-FIC-1104.1	11/18/10 14:15	13	H2-AI-1050A.1	11/18/10 14:15	12.6	H2-AI-1050B.1	11/18/10 14:15	3.2
H2-FIC-1111.1	11/18/10 14:16	0.938	H2-FIC-1104.1	11/18/10 14:16	13	H2-AI-1050A.1	11/18/10 14:16	12.6	H2-AI-1050B.1	11/18/10 14:16	2.6
H2-FIC-1111.1	11/18/10 14:17	0.938	H2-FIC-1104.1	11/18/10 14:17	13	H2-AI-1050A.1	11/18/10 14:17	12.6	H2-AI-1050B.1	11/18/10 14:17	3.3
H2-FIC-1111.1	11/18/10 14:18	0.938	H2-FIC-1104.1	11/18/10 14:18	13	H2-AI-1050A.1	11/18/10 14:18	12.6	H2-AI-1050B.1	11/18/10 14:18	2.7
H2-FIC-1111.1	11/18/10 14:19	0.938	H2-FIC-1104.1	11/18/10 14:19	13	H2-AI-1050A.1	11/18/10 14:19	12.6	H2-AI-1050B.1	11/18/10 14:19	3.2
H2-FIC-1111.1	11/18/10 14:20	0.938	H2-FIC-1104.1	11/18/10 14:20	13	H2-AI-1050A.1	11/18/10 14:20	12.6	H2-AI-1050B.1	11/18/10 14:20	2.5
H2-FIC-1111.1	11/18/10 14:21	0.939	H2-FIC-1104.1	11/18/10 14:21	13	H2-AI-1050A.1	11/18/10 14:21	12.6	H2-AI-1050B.1	11/18/10 14:21	3.2
H2-FIC-1111.1	11/18/10 14:22	0.939	H2-FIC-1104.1	11/18/10 14:22	13	H2-AI-1050A.1	11/18/10 14:22	12.6	H2-AI-1050B.1	11/18/10 14:22	2.5
H2-FIC-1111.1	11/18/10 14:23	0.939	H2-FIC-1104.1	11/18/10 14:23	13	H2-AI-1050A.1	11/18/10 14:23	12.6	H2-AI-1050B.1	11/18/10 14:23	3
H2-FIC-1111.1	11/18/10 14:24	0.939	H2-FIC-1104.1	11/18/10 14:24	13	H2-AI-1050A.1	11/18/10 14:24	12.6	H2-AI-1050B.1	11/18/10 14:24	2.5
H2-FIC-1111.1	11/18/10 14:25	0.939	H2-FIC-1104.1	11/18/10 14:25	13	H2-AI-1050A.1	11/18/10 14:25	12.6	H2-AI-1050B.1	11/18/10 14:25	3
H2-FIC-1111.1	11/18/10 14:26	0.94	H2-FIC-1104.1	11/18/10 14:26	13	H2-AI-1050A.1	11/18/10 14:26	12.6	H2-AI-1050B.1	11/18/10 14:26	2.5
H2-FIC-1111.1	11/18/10 14:27	0.94	H2-FIC-1104.1	11/18/10 14:27	13	H2-AI-1050A.1	11/18/10 14:27	12.6	H2-AI-1050B.1	11/18/10 14:27	3.1
H2-FIC-1111.1	11/18/10 14:28	0.94	H2-FIC-1104.1	11/18/10 14:28	13	H2-AI-1050A.1	11/18/10 14:28	12.6	H2-AI-1050B.1	11/18/10 14:28	2.5
H2-FIC-1111.1	11/18/10 14:29	0.94	H2-FIC-1104.1	11/18/10 14:29	13	H2-AI-1050A.1	11/18/10 14:29	12.6	H2-AI-1050B.1	11/18/10 14:29	3.1
H2-FIC-1111.1	11/18/10 14:30	0.94	H2-FIC-1104.1	11/18/10 14:30	13	H2-AI-1050A.1	11/18/10 14:30	12.6	H2-AI-1050B.1	11/18/10 14:30	3.1
H2-FIC-1111.1	11/18/10 14:31	0.94	H2-FIC-1104.1	11/18/10 14:31	13	H2-AI-1050A.1	11/18/10 14:31	12.6	H2-AI-1050B.1	11/18/10 14:31	3
H2-FIC-1111.1	11/18/10 14:32	0.941	H2-FIC-1104.1	11/18/10 14:32	13	H2-AI-1050A.1	11/18/10 14:32	12.6	H2-AI-1050B.1	11/18/10 14:32	3
H2-FIC-1111.1	11/18/10 14:33	0.941	H2-FIC-1104.1	11/18/10 14:33	13.1	H2-AI-1050A.1	11/18/10 14:33	12.6	H2-AI-1050B.1	11/18/10 14:33	2.9
H2-FIC-1111.1	11/18/10 14:34	0.941	H2-FIC-1104.1	11/18/10 14:34	13.1	H2-AI-1050A.1	11/18/10 14:34	12.6	H2-AI-1050B.1	11/18/10 14:34	2.8
H2-FIC-1111.1	11/18/10 14:35	0.941	H2-FIC-1104.1	11/18/10 14:35	13	H2-AI-1050A.1	11/18/10 14:35	12.6	H2-AI-1050B.1	11/18/10 14:35	2.8
H2-FIC-1111.1	11/18/10 14:36	0.941	H2-FIC-1104.1	11/18/10 14:36	12.6	H2-AI-1050A.1	11/18/10 14:36	12.6	H2-AI-1050B.1	11/18/10 14:36	2.7
H2-FIC-1111.1	11/18/10 14:37	0.942	H2-FIC-1104.1	11/18/10 14:37	13.2	H2-AI-1050A.1	11/18/10 14:37	12.6	H2-AI-1050B.1	11/18/10 14:37	2.8
H2-FIC-1111.1	11/18/10 14:38	0.942	H2-FIC-1104.1	11/18/10 14:38	12.7	H2-AI-1050A.1	11/18/10 14:38	12.6	H2-AI-1050B.1	11/18/10 14:38	2.9
H2-FIC-1111.1	11/18/10 14:39	0.942	H2-FIC-1104.1	11/18/10 14:39	13.2	H2-AI-1050A.1	11/18/10 14:39	12.6	H2-AI-1050B.1	11/18/10 14:39	3
H2-FIC-1111.1	11/18/10 14:40	0.942	H2-FIC-1104.1	11/18/10 14:40	12.6	H2-AI-1050A.1	11/18/10 14:40	12.6	H2-AI-1050B.1	11/18/10 14:40	3
H2-FIC-1111.1	11/18/10 14:41	0.942	H2-FIC-1104.1	11/18/10 14:41	13.4	H2-AI-1050A.1	11/18/10 14:41	12.6	H2-AI-1050B.1	11/18/10 14:41	2.1
H2-FIC-1111.1	11/18/10 14:42	0.943	H2-FIC-1104.1	11/18/10 14:42	12.7	H2-AI-1050A.1	11/18/10 14:42	12.6	H2-AI-1050B.1	11/18/10 14:42	3
H2-FIC-1111.1	11/18/10 14:43	0.943	H2-FIC-1104.1	11/18/10 14:43	13.2	H2-AI-1050A.1	11/18/10 14:43	12.6	H2-AI-1050B.1	11/18/10 14:43	2
H2-FIC-1111.1	11/18/10 14:44	0.943	H2-FIC-1104.1	11/18/10 14:44	13.3	H2-AI-1050A.1	11/18/10 14:44	12.6	H2-AI-1050B.1	11/18/10 14:44	3.3
H2-FIC-1111.1	11/18/10 14:45	0.943	H2-FIC-1104.1	11/18/10 14:45	13.4	H2-AI-1050A.1	11/18/10 14:45	12.6	H2-AI-1050B.1	11/18/10 14:45	1.9
H2-FIC-1111.1	11/18/10 14:46	0.943	H2-FIC-1104.1	11/18/10 14:46	13.5	H2-AI-1050A.1	11/18/10 14:46	12.6	H2-AI-1050B.1	11/18/10 14:46	3.2
H2-FIC-1111.1	11/18/10 14:47	0.944	H2-FIC-1104.1	11/18/10 14:47	13.6	H2-AI-1050A.1	11/18/10 14:47	12.6	H2-AI-1050B.1	11/18/10 14:47	2
H2-FIC-1111.1	11/18/10 14:48	0.944	H2-FIC-1104.1	11/18/10 14:48	13.6	H2-AI-1050A.1	11/18/10 14:48	12.6	H2-AI-1050B.1	11/18/10 14:48	3.3
H2-FIC-1111.1	11/18/10 14:49	0.944	H2-FIC-1104.1	11/18/10 14:49	12.8	H2-AI-1050A.1	11/18/10 14:49	12.6	H2-AI-1050B.1	11/18/10 14:49	2.3
H2-FIC-1111.1	11/18/10 14:50	0.944	H2-FIC-1104.1	11/18/10 14:50	13.6	H2-AI-1050A.1	11/18/10 14:50	12.6	H2-AI-1050B.1	11/18/10 14:50	3.4
H2-FIC-1111.1	11/18/10 14:51	0.944	H2-FIC-1104.1	11/18/10 14:51	12.5	H2-AI-1050A.1	11/18/10 14:51	12.6	H2-AI-1050B.1	11/18/10 14:51	2.4
H2-FIC-1111.1	11/18/10 14:52	0.944	H2-FIC-1104.1	11/18/10 14:52	13.3	H2-AI-1050A.1	11/18/10 14:52	12.7	H2-AI-1050B.1	11/18/10 14:52	3.5
H2-FIC-1111.1	11/18/10 14:53	0.945	H2-FIC-1104.1	11/18/10 14:53	12.4	H2-AI-1050A.1	11/18/10 14:53	12.6	H2-AI-1050B.1	11/18/10 14:53	2.4
H2-FIC-1111.1	11/18/10 14:54	0.945	H2-FIC-1104.1	11/18/10 14:54	13.3	H2-AI-1050A.1	11/18/10 14:54	12.6	H2-AI-1050B.1	11/18/10 14:54	3.3
H2-FIC-1111.1	11/18/10 14:55	0.945	H2-FIC-1104.1	11/18/10 14:55	12.3	H2-AI-1050A.1	11/18/10 14:55	12.6	H2-AI-1050B.1	11/18/10 14:55	2.2
H2-FIC-1111.1	11/18/10 14:56	0.945	H2-FIC-1104.1	11/18/10 14:56	13	H2-AI-1050A.1	11/18/10 14:56	12.6	H2-AI-1050B.1	11/18/10 14:56	3.3
H2-FIC-1111.1	11/18/10 14:57	0.945	H2-FIC-1104.1	11/18/10 14:57	12.3	H2-AI-1050A.1	11/18/10 14:57	12.6	H2-AI-1050B.1	11/18/10 14:57	2.2
H2-FIC-1111.1	11/18/10 14:58	0.946	H2-FIC-1104.1	11/18/10 14:58	13	H2-AI-1050A.1	11/18/10 14:58	12.6	H2-AI-1050B.1	11/18/10 14:58	3.2
H2-FIC-1111.1	11/18/10 14:59	0.946	H2-FIC-1104.1	11/18/10 14:59	12.3	H2-AI-1050A.1	11/18/10 14:59	12.6	H2-AI-1050B.1	11/18/10 14:59	2.4
H2-FIC-1111.1	11/18/10 15:00	0.946	H2-FIC-1104.1	11/18/10 15:00	12.9	H2-AI-1050A.1	11/18/10 15:00	12.6	H2-AI-1050B.1	11/18/10 15:00	3.2
H2-FIC-1111.1	11/18/10 15:01	0.946	H2-FIC-1104.1	11/18/10 15:01	12.5	H2-AI-1050A.1	11/18/10 15:01	12.6	H2-AI-1050B.1	11/18/10 15:01	2.4
H2-FIC-1111.1	11/18/10 15:02	0.946	H2-FIC-1104.1	11/18/10 15:02	13	H2-AI-1050A.1	11/18/10 15:02	12.6	H2-AI-1050B.1	11/18/10 15:02	3.2
H2-FIC-1111.1	11/18/10 15:03	0.947	H2-FIC-1104.1	11/18/10 15:03	13	H2-AI-1050A.1	11/18/10 15:03	12.6	H2-AI-1050B.1	11/18/10 15:03	2.3
H2-FIC-1111.1	11/18/10 15:04	0.947	H2-FIC-1104.1	11/18/10 15:04	13	H2-AI-1050A.1	11/18/10 15:04	12.6	H2-AI-1050B.1	11/18/10 15:04	3.1
H2-FIC-1111.1	11/18/10 15:05	0.947	H2-FIC-1104.1	11/18/10 15:05	13	H2-AI-1050A.1	11/18/10 15:05	12.6	H2-AI-1050B.1	11/18/10 15:05	2.4
H2-FIC-1111.1	11/18/10 15:06	0.947	H2-FIC-1104.1	11/18/10 15:06	13	H2-AI-1050A.1	11/18/10 15:06	12.6	H2-AI-1050B.1	11/18/10 15:06	3.3
H2-FIC-1111.1	11/18/10 15:07	0.947	H2-FIC-1104.1	11/18/10 15:07	13	H2-AI-1050A.1	11/18/10 15:07	12.6	H2-AI-1050B.1	11/18/10 15:07	2.6
H2-FIC-1111.1	11/18/10 15:08	0.948	H2-FIC-1104.1	11/18/10 15:08	13	H2-AI-1050A.1	11/18/10 15:08	12.6	H2-AI-1050B.1	11/18/10 15:08	3.2
H2-FIC-1111.1	11/18/10 15:09	0.947	H2-FIC-1104.1	11/18/10 15:09	13	H2-AI-1050A.1	11/18/10 15:09	12.6	H2-AI-1050B.1	11/18/10 15:09	2.4
H2-FIC-1111.1	11/18/10 15:10	0.942	H2-FIC-1104.1	11/18/10 15:10	13.1	H2-AI-1050A.1	11/18/10 15:10	12.6	H2-AI-1050B.1	11/18/10 15:10	3
H2-FIC-1111.1	11/18/10 15:11	0.936	H2-FIC-1104.1	11/18/10 15:11	13.1	H2-AI-1050A.1	11/18/10 15:11	12.6	H2-AI-1050B.1	11/18/10 15:11	2.3
H2-FIC-1111.1	11/18/10 15:12	0.93	H2-FIC-1104.1	11/18/10 15:12	13.1	H2-AI-1050A.1	11/18/10 15:12	12.6	H2-AI-1050B.1	11/18/10 15:12	3
H2-FIC-1111.1	11/18/10 15:13	0.925	H2-FIC-1104.1	11/18/10 15:13	13.1	H2-AI-1050A.1	11/18/10 15:13	12.6	H2-AI-1050B.1	11/18/10 15:13	2.3
H2-FIC-1111.1	11/18/10 15:14	0.919	H2-FIC-1104.1	11/18/10 15:14	13.1	H2-AI-1050A.1	11/18/10 15:14	12.6	H2-AI-1050B.1	11/18/10 15:14	2.9
H2-FIC-1111.1	11/18/10 15:15	0.913	H2-FIC-1104.1	11/18/10 15:15	13.1	H2-AI-1050A.1	11/18/10 15:15	12.6	H2-AI-1050B.1	11/18/10 15:15	2.4
H2-FIC-1111.1	11/18/10 15:16	0.908	H2-FIC-1104.1	11/18/10 15:16	13.1	H2-AI-1050A.1	11/18/10 15:16	12.6	H2-AI-1050B.1	11/18/10 15:16	2.9
H2-FIC-1111.1	11/18/10 15:17	0.902	H2-FIC-1104.1	11/18/10 15:17	13.1	H2-AI-1050A.1	11/18/10 15:17	12.6	H2-AI-1050B.1	11/18/10 15:17	2.9
H2-FIC-1111.1	11/18/10 15:18	0.898	H2-FIC-1104.1	11/18/10 15:18	13.1	H2-AI-1050A.1	11/18/10 15:18	12.6	H2-AI-1050B.1	11/18/10 15:18	2.9
H2-FIC-1111.1	11/18/10 15:19	0.911	H2-FIC-1104.1	11/18/10 15:19	13.1	H2-AI-1050A.1	11/18/10 15:19	12.6	H2-AI-1050B.1	11/18/10 15:19	2.9
H2-FIC-1111.1	11/18/10 15:20	0.924	H2-FIC-1104.1	11/18/10 15:20	13.1	H2-AI-1050A.1	11/18/10 15:20	12.6	H2-AI-1050B.1	11/18/10 15:20	2.9
H2-FIC-1111.1	11/18/10 15:21	0.936	H2-FIC-1104.1	11/18/10 15:21	13.2	H2-AI-1050A.1	11/18/10 15:21	12.6	H2-AI-1050B.1	11/18/10 15:21	2.9
H2-FIC-1111.1	11/18/10 15:22	0.948	H2-FIC-1104.1	11/18/10 15:22	13.1	H2-AI-1050A.1	11/18/10 15:22	12.6	H2-AI-1050B.1	11/18/10 15:22	2.3
H2-FIC-1111.1	11/18/10 15:23	0.948	H2-FIC-1104.1	11/18/10 15:23	12.5	H2-AI-1050A.1	11/18/10 15:23	12.6	H2-AI-1050B.1	11/18/10 15:23	2.8
H2-FIC-1111.1	11/18/10 15:24	0.948	H2-FIC-1104.1	11/18/10 15:24	13.3	H2-AI-1050A.1	11/18/10 15:24	12.6	H2-AI-1050B.1	11/18/10 15:24	2.2
H2-FIC-1111.1	11/18/10 15:25	0.947	H2-FIC-1104.1	11/18/10 15:25	12.4	H2-AI-1050A.1	11/18/10 15:25	12.7	H2-AI-1050B.1	11/18/10 15:25	2.9
H2-FIC-1111.1	11/18/10 15:26	0.947	H2-FIC-1104.1	11/18/10 15:26	13.2	H2-AI-1050A.1	11/18/10 15:26	13.9	H2-AI-1050B.1	11/18/10 15:26	2.1
H2-FIC-1111.1	11/18/10 15:27	0.947	H2-FIC-1104.1	11/18/10 15:27	12.6	H2-AI-1050A.1	11/18/10 15:27	13.8	H2-AI-1050B.1	11/18/10 15:27	3.1
H2-FIC-1111.1	11/18/10 15:28	0.946	H2-FIC-1104.1	11/18/10 15:28	13.1	H2-AI-1050A.1	11/18/10 15:28	13.8	H2-AI-1050B.1	11/18/10 15:28	2.1
H2-FIC-1111.1	11/18/10 15:29	0.946	H2-FIC-1104.1	11/18/10 15:29	13.1	H2-AI-1050A.1	11/18/10 15:29	13.7	H2-AI-1050B.1	11/18/10 15:29	3.3
H2-FIC-1111.1	11/18/10 15:30	0.946	H2-FIC-1104.1	11/18/10 15:30	13.1	H2-AI-1050A.1	11/18/10 15:30	13.6	H2-AI-1050B.1	11/18/10 15:30	2

HP2 Reformer

Fuel Flow - (RFG) MMSCFD			Fuel Flow - (PSA OFFGAS) MMSCFD			NOx - PPM			O2 - Percent		
tag	time	FG Flow MMSCFD, 1 min ave.	tag	time	FG Flow MMSCFD, 1 min ave.	tag	time	Nox (ppm), 1 min ave.	tag	time	O_2 (%), 1 min ave.
H2-FIC-1111.1	11/18/10 15:31	0.945	H2-FIC-1104.1	11/18/10 15:31	13	H2-AI-1050A.1	11/18/10 15:31	13.1	H2-AI-1050B.1	11/18/10 15:31	3.2
H2-FIC-1111.1	11/18/10 15:32	0.945	H2-FIC-1104.1	11/18/10 15:32	13	H2-AI-1050A.1	11/18/10 15:32	12.7	H2-AI-1050B.1	11/18/10 15:32	1.9
H2-FIC-1111.1	11/18/10 15:33	0.945	H2-FIC-1104.1	11/18/10 15:33	13.6	H2-AI-1050A.1	11/18/10 15:33	12.4	H2-AI-1050B.1	11/18/10 15:33	3.2
H2-FIC-1111.1	11/18/10 15:34	0.944	H2-FIC-1104.1	11/18/10 15:34	13	H2-AI-1050A.1	11/18/10 15:34	13.8	H2-AI-1050B.1	11/18/10 15:34	1.8
H2-FIC-1111.1	11/18/10 15:35	0.944	H2-FIC-1104.1	11/18/10 15:35	13.6	H2-AI-1050A.1	11/18/10 15:35	12.6	H2-AI-1050B.1	11/18/10 15:35	3.1
H2-FIC-1111.1	11/18/10 15:36	0.944	H2-FIC-1104.1	11/18/10 15:36	12.7	H2-AI-1050A.1	11/18/10 15:36	12.6	H2-AI-1050B.1	11/18/10 15:36	2.2
H2-FIC-1111.1	11/18/10 15:37	0.943	H2-FIC-1104.1	11/18/10 15:37	13.5	H2-AI-1050A.1	11/18/10 15:37	12.6	H2-AI-1050B.1	11/18/10 15:37	3.4
H2-FIC-1111.1	11/18/10 15:38	0.943	H2-FIC-1104.1	11/18/10 15:38	12.4	H2-AI-1050A.1	11/18/10 15:38	12.6	H2-AI-1050B.1	11/18/10 15:38	2.1
H2-FIC-1111.1	11/18/10 15:39	0.943	H2-FIC-1104.1	11/18/10 15:39	13.3	H2-AI-1050A.1	11/18/10 15:39	12.6	H2-AI-1050B.1	11/18/10 15:39	3.4
H2-FIC-1111.1	11/18/10 15:40	0.942	H2-FIC-1104.1	11/18/10 15:40	12.3	H2-AI-1050A.1	11/18/10 15:40	12.6	H2-AI-1050B.1	11/18/10 15:40	2.4
H2-FIC-1111.1	11/18/10 15:41	0.942	H2-FIC-1104.1	11/18/10 15:41	13.3	H2-AI-1050A.1	11/18/10 15:41	12.6	H2-AI-1050B.1	11/18/10 15:41	3.4
H2-FIC-1111.1	11/18/10 15:42	0.942	H2-FIC-1104.1	11/18/10 15:42	12.1	H2-AI-1050A.1	11/18/10 15:42	12.6	H2-AI-1050B.1	11/18/10 15:42	2.3
H2-FIC-1111.1	11/18/10 15:43	0.941	H2-FIC-1104.1	11/18/10 15:43	13.1	H2-AI-1050A.1	11/18/10 15:43	12.6	H2-AI-1050B.1	11/18/10 15:43	3.3
H2-FIC-1111.1	11/18/10 15:44	0.941	H2-FIC-1104.1	11/18/10 15:44	12.5	H2-AI-1050A.1	11/18/10 15:44	12.7	H2-AI-1050B.1	11/18/10 15:44	2.3
H2-FIC-1111.1	11/18/10 15:45	0.941	H2-FIC-1104.1	11/18/10 15:45	13.1	H2-AI-1050A.1	11/18/10 15:45	12.7	H2-AI-1050B.1	11/18/10 15:45	3.3
H2-FIC-1111.1	11/18/10 15:46	0.94	H2-FIC-1104.1	11/18/10 15:46	12.6	H2-AI-1050A.1	11/18/10 15:46	12.7	H2-AI-1050B.1	11/18/10 15:46	2.4
H2-FIC-1111.1	11/18/10 15:47	0.94	H2-FIC-1104.1	11/18/10 15:47	12.6	H2-AI-1050A.1	11/18/10 15:47	12.7	H2-AI-1050B.1	11/18/10 15:47	3.2
H2-FIC-1111.1	11/18/10 15:48	0.94	H2-FIC-1104.1	11/18/10 15:48	12.6	H2-AI-1050A.1	11/18/10 15:48	12.7	H2-AI-1050B.1	11/18/10 15:48	2.4
H2-FIC-1111.1	11/18/10 15:49	0.939	H2-FIC-1104.1	11/18/10 15:49	12.6	H2-AI-1050A.1	11/18/10 15:49	12.7	H2-AI-1050B.1	11/18/10 15:49	3.4
H2-FIC-1111.1	11/18/10 15:50	0.939	H2-FIC-1104.1	11/18/10 15:50	12.6	H2-AI-1050A.1	11/18/10 15:50	12.7	H2-AI-1050B.1	11/18/10 15:50	2.6
H2-FIC-1111.1	11/18/10 15:51	0.938	H2-FIC-1104.1	11/18/10 15:51	12.6	H2-AI-1050A.1	11/18/10 15:51	12.7	H2-AI-1050B.1	11/18/10 15:51	3.4
H2-FIC-1111.1	11/18/10 15:52	0.938	H2-FIC-1104.1	11/18/10 15:52	12.6	H2-AI-1050A.1	11/18/10 15:52	12.8	H2-AI-1050B.1	11/18/10 15:52	2.5
H2-FIC-1111.1	11/18/10 15:53	0.938	H2-FIC-1104.1	11/18/10 15:53	13.2	H2-AI-1050A.1	11/18/10 15:53	12.8	H2-AI-1050B.1	11/18/10 15:53	3.3
H2-FIC-1111.1	11/18/10 15:54	0.937	H2-FIC-1104.1	11/18/10 15:54	13.2	H2-AI-1050A.1	11/18/10 15:54	12.8	H2-AI-1050B.1	11/18/10 15:54	2.3
H2-FIC-1111.1	11/18/10 15:55	0.937	H2-FIC-1104.1	11/18/10 15:55	13.1	H2-AI-1050A.1	11/18/10 15:55	12.8	H2-AI-1050B.1	11/18/10 15:55	3
H2-FIC-1111.1	11/18/10 15:56	0.937	H2-FIC-1104.1	11/18/10 15:56	13	H2-AI-1050A.1	11/18/10 15:56	12.8	H2-AI-1050B.1	11/18/10 15:56	2.4
H2-FIC-1111.1	11/18/10 15:57	0.936	H2-FIC-1104.1	11/18/10 15:57	13	H2-AI-1050A.1	11/18/10 15:57	12.8	H2-AI-1050B.1	11/18/10 15:57	3
H2-FIC-1111.1	11/18/10 15:58	0.936	H2-FIC-1104.1	11/18/10 15:58	12.9	H2-AI-1050A.1	11/18/10 15:58	12.8	H2-AI-1050B.1	11/18/10 15:58	2.5
H2-FIC-1111.1	11/18/10 15:59	0.936	H2-FIC-1104.1	11/18/10 15:59	12.8	H2-AI-1050A.1	11/18/10 15:59	12.8	H2-AI-1050B.1	11/18/10 15:59	3
H2-FIC-1111.1	11/18/10 16:00	0.935	H2-FIC-1104.1	11/18/10 16:00	12.9	H2-AI-1050A.1	11/18/10 16:00	12.9	H2-AI-1050B.1	11/18/10 16:00	2.4
H2-FIC-1111.1	11/18/10 16:01	0.935	H2-FIC-1104.1	11/18/10 16:01	12.9	H2-AI-1050A.1	11/18/10 16:01	12.9	H2-AI-1050B.1	11/18/10 16:01	3.1
H2-FIC-1111.1	11/18/10 16:02	0.935	H2-FIC-1104.1	11/18/10 16:02	12.9	H2-AI-1050A.1	11/18/10 16:02	12.9	H2-AI-1050B.1	11/18/10 16:02	2.4
H2-FIC-1111.1	11/18/10 16:03	0.934	H2-FIC-1104.1	11/18/10 16:03	13	H2-AI-1050A.1	11/18/10 16:03	12.9	H2-AI-1050B.1	11/18/10 16:03	3
H2-FIC-1111.1	11/18/10 16:04	0.934	H2-FIC-1104.1	11/18/10 16:04	13	H2-AI-1050A.1	11/18/10 16:04	12.9	H2-AI-1050B.1	11/18/10 16:04	2.9
H2-FIC-1111.1	11/18/10 16:05	0.934	H2-FIC-1104.1	11/18/10 16:05	13	H2-AI-1050A.1	11/18/10 16:05	12.9	H2-AI-1050B.1	11/18/10 16:05	2.8
H2-FIC-1111.1	11/18/10 16:06	0.933	H2-FIC-1104.1	11/18/10 16:06	13.1	H2-AI-1050A.1	11/18/10 16:06	12.9	H2-AI-1050B.1	11/18/10 16:06	2.7
H2-FIC-1111.1	11/18/10 16:07	0.933	H2-FIC-1104.1	11/18/10 16:07	13.1	H2-AI-1050A.1	11/18/10 16:07	12.9	H2-AI-1050B.1	11/18/10 16:07	2.8
H2-FIC-1111.1	11/18/10 16:08	0.933	H2-FIC-1104.1	11/18/10 16:08	13.1	H2-AI-1050A.1	11/18/10 16:08	12.9	H2-AI-1050B.1	11/18/10 16:08	2.8
H2-FIC-1111.1	11/18/10 16:09	0.932	H2-FIC-1104.1	11/18/10 16:09	13.1	H2-AI-1050A.1	11/18/10 16:09	13	H2-AI-1050B.1	11/18/10 16:09	2.1
H2-FIC-1111.1	11/18/10 16:10	0.932	H2-FIC-1104.1	11/18/10 16:10	12.3	H2-AI-1050A.1	11/18/10 16:10	13	H2-AI-1050B.1	11/18/10 16:10	2.8
H2-FIC-1111.1	11/18/10 16:11	0.932	H2-FIC-1104.1	11/18/10 16:11	13.2	H2-AI-1050A.1	11/18/10 16:11	13	H2-AI-1050B.1	11/18/10 16:11	2.2
H2-FIC-1111.1	11/18/10 16:12	0.931	H2-FIC-1104.1	11/18/10 16:12	12.4	H2-AI-1050A.1	11/18/10 16:12	13	H2-AI-1050B.1	11/18/10 16:12	2.8
H2-FIC-1111.1	11/18/10 16:13	0.931	H2-FIC-1104.1	11/18/10 16:13	13.3	H2-AI-1050A.1	11/18/10 16:13	13	H2-AI-1050B.1	11/18/10 16:13	2.1
H2-FIC-1111.1	11/18/10 16:14	0.931	H2-FIC-1104.1	11/18/10 16:14	12.7	H2-AI-1050A.1	11/18/10 16:14	13	H2-AI-1050B.1	11/18/10 16:14	2.9
H2-FIC-1111.1	11/18/10 16:15	0.93	H2-FIC-1104.1	11/18/10 16:15	13.3	H2-AI-1050A.1	11/18/10 16:15	13	H2-AI-1050B.1	11/18/10 16:15	1.7
H2-FIC-1111.1	11/18/10 16:16	0.93	H2-FIC-1104.1	11/18/10 16:16	13.4	H2-AI-1050A.1	11/18/10 16:16	13	H2-AI-1050B.1	11/18/10 16:16	3.1
H2-FIC-1111.1	11/18/10 16:17	0.93	H2-FIC-1104.1	11/18/10 16:17	13.5	H2-AI-1050A.1	11/18/10 16:17	13.1	H2-AI-1050B.1	11/18/10 16:17	1.6
H2-FIC-1111.1	11/18/10 16:18	0.929	H2-FIC-1104.1	11/18/10 16:18	13.6	H2-AI-1050A.1	11/18/10 16:18	13.1	H2-AI-1050B.1	11/18/10 16:18	3.2
H2-FIC-1111.1	11/18/10 16:19	0.929	H2-FIC-1104.1	11/18/10 16:19	13.6	H2-AI-1050A.1	11/18/10 16:19	13.1	H2-AI-1050B.1	11/18/10 16:19	1.8
H2-FIC-1111.1	11/18/10 16:20	0.928	H2-FIC-1104.1	11/18/10 16:20	13.7	H2-AI-1050A.1	11/18/10 16:20	13.1	H2-AI-1050B.1	11/18/10 16:20	3.3
H2-FIC-1111.1	11/18/10 16:21	0.928	H2-FIC-1104.1	11/18/10 16:21	12.5	H2-AI-1050A.1	11/18/10 16:21	13.1	H2-AI-1050B.1	11/18/10 16:21	1.9
H2-FIC-1111.1	11/18/10 16:22	0.928	H2-FIC-1104.1	11/18/10 16:22	13.6	H2-AI-1050A.1	11/18/10 16:22	13.1	H2-AI-1050B.1	11/18/10 16:22	3.2
H2-FIC-1111.1	11/18/10 16:23	0.928	H2-FIC-1104.1	11/18/10 16:23	12.4	H2-AI-1050A.1	11/18/10 16:23	13.1	H2-AI-1050B.1	11/18/10 16:23	2.1
H2-FIC-1111.1	11/18/10 16:24	0.928	H2-FIC-1104.1	11/18/10 16:24	13.5	H2-AI-1050A.1	11/18/10 16:24	13.1	H2-AI-1050B.1	11/18/10 16:24	3.4
H2-FIC-1111.1	11/18/10 16:25	0.927	H2-FIC-1104.1	11/18/10 16:25	12.3	H2-AI-1050A.1	11/18/10 16:25	13.1	H2-AI-1050B.1	11/18/10 16:25	2.2
H2-FIC-1111.1	11/18/10 16:26	0.927	H2-FIC-1104.1	11/18/10 16:26	13.2	H2-AI-1050A.1	11/18/10 16:26	13.2	H2-AI-1050B.1	11/18/10 16:26	3.4
H2-FIC-1111.1	11/18/10 16:27	0.927	H2-FIC-1104.1	11/18/10 16:27	12.2	H2-AI-1050A.1	11/18/10 16:27	13.2	H2-AI-1050B.1	11/18/10 16:27	2.3
H2-FIC-1111.1	11/18/10 16:28	0.927	H2-FIC-1104.1	11/18/10 16:28	13.2	H2-AI-1050A.1	11/18/10 16:28	13.2	H2-AI-1050B.1	11/18/10 16:28	3.5
H2-FIC-1111.1	11/18/10 16:29	0.927	H2-FIC-1104.1	11/18/10 16:29	12.2	H2-AI-1050A.1	11/18/10 16:29	13.2	H2-AI-1050B.1	11/18/10 16:29	2.4
H2-FIC-1111.1	11/18/10 16:30	0.927	H2-FIC-1104.1	11/18/10 16:30	13	H2-AI-1050A.1	11/18/10 16:30	13.2	H2-AI-1050B.1	11/18/10 16:30	3.5
H2-FIC-1111.1	11/18/10 16:31	0.927	H2-FIC-1104.1	11/18/10 16:31	12.4	H2-AI-1050A.1	11/18/10 16:31	13.2	H2-AI-1050B.1	11/18/10 16:31	2.5
H2-FIC-1111.1	11/18/10 16:32	0.926	H2-FIC-1104.1	11/18/10 16:32	13	H2-AI-1050A.1	11/18/10 16:32	13.2	H2-AI-1050B.1	11/18/10 16:32	3.5
H2-FIC-1111.1	11/18/10 16:33	0.926	H2-FIC-1104.1	11/18/10 16:33	13	H2-AI-1050A.1	11/18/10 16:33	13.2	H2-AI-1050B.1	11/18/10 16:33	2.5
H2-FIC-1111.1	11/18/10 16:34	0.926	H2-FIC-1104.1	11/18/10 16:34	12.9	H2-AI-1050A.1	11/18/10 16:34	13.3	H2-AI-1050B.1	11/18/10 16:34	3.2
H2-FIC-1111.1	11/18/10 16:35	0.926	H2-FIC-1104.1	11/18/10 16:35	12.9	H2-AI-1050A.1	11/18/10 16:35	13.2	H2-AI-1050B.1	11/18/10 16:35	2.4
H2-FIC-1111.1	11/18/10 16:36	0.926	H2-FIC-1104.1	11/18/10 16:36	12.9	H2-AI-1050A.1	11/18/10 16:36	13.2	H2-AI-1050B.1	11/18/10 16:36	3.4
H2-FIC-1111.1	11/18/10 16:37	0.926	H2-FIC-1104.1	11/18/10 16:37	12.9	H2-AI-1050A.1	11/18/10 16:37	13.2	H2-AI-1050B.1	11/18/10 16:37	2.6
H2-FIC-1111.1	11/18/10 16:38	0.925	H2-FIC-1104.1	11/18/10 16:38	12.9	H2-AI-1050A.1	11/18/10 16:38	13.2	H2-AI-1050B.1	11/18/10 16:38	3.2
H2-FIC-1111.1	11/18/10 16:39	0.925	H2-FIC-1104.1	11/18/10 16:39	13	H2-AI-1050A.1	11/18/10 16:39	13.2	H2-AI-1050B.1	11/18/10 16:39	2.6
H2-FIC-1111.1	11/18/10 16:40	0.925	H2-FIC-1104.1	11/18/10 16:40	13	H2-AI-1050A.1	11/18/10 16:40	13.2	H2-AI-1050B.1	11/18/10 16:40	3.2
H2-FIC-1111.1	11/18/10 16:41	0.925	H2-FIC-1104.1	11/18/10 16:41	13	H2-AI-1050A.1	11/18/10 16:41	13.2	H2-AI-1050B.1	11/18/10 16:41	2.4
H2-FIC-1111.1	11/18/10 16:42	0.925	H2-FIC-1104.1	11/18/10 16:42	13	H2-AI-1050A.1	11/18/10 16:42	13.2	H2-AI-1050B.1	11/18/10 16:42	3.2
H2-FIC-1111.1	11/18/10 16:43	0.925	H2-FIC-1104.1	11/18/10 16:43	13	H2-AI-1050A.1	11/18/10 16:43	13.2	H2-AI-1050B.1	11/18/10 16:43	2.5
H2-FIC-1111.1	11/18/10 16:44	0.924	H2-FIC-1104.1	11/18/10 16:44	13	H2-AI-1050A.1	11/18/10 16:44	13.1	H2-AI-1050B.1	11/18/10 16:44	3.2
H2-FIC-1111.1	11/18/10 16:45	0.924	H2-FIC-1104.1	11/18/10 16:45	13	H2-AI-1050A.1	11/18/10 16:45	13.1	H2-AI-1050B.1	11/18/10 16:45	2.6
H2-FIC-1111.1	11/18/10 16:46	0.924	H2-FIC-1104.1	11/18/10 16:46	13	H2-AI-1050A.1	11/18/10 16:46	13.1	H2-AI-1050B.1	11/18/10 16:46	3.3
H2-FIC-1111.1	11/18/10 16:47	0.924	H2-FIC-1104.1	11/18/10 16:47	13.1	H2-AI-1050A.1	11/18/10 16:47	13.1	H2-AI-1050B.1	11/18/10 16:47	2.7
H2-FIC-1111.1	11/18/10 16:48	0.924	H2-FIC-1104.1	11/18/10 16:48	13.1	H2-AI-1050A.1	11/18/10 16:48	13.1	H2-AI-1050B.1	11/18/10 16:48	3.2
H2-FIC-1111.1	11/18/10 16:49	0.924	H2-FIC-1104.1	11/18/10 16:49	13.1	H2-AI-1050A.1	11/18/10 16:49	13.1	H2-AI-1050B.1	11/18/10 16:49	3
H2-FIC-1111.1	11/18/10 16:50	0.923	H2-FIC-1104.1	11/18/10 16:50	13.1	H2-AI-1050A.1	11/18/10 16:50	13.1	H2-AI-1050B.1	11/18/10 16:50	2.9
H2-FIC-1111.1	11/18/10 16:51	0.923	H2-FIC-1104.1	11/18/10 16:51	13.1	H2-AI-1050A.1	11/18/10 16:51	13.1	H2-AI-1050B.1	11/18/10 16:51	2.7
H2-FIC-1111.1	11/18/10 16:52	0.923	H2-FIC-1104.1	11/18/10 16:52	13.1	H2-AI-1050A.1	11/18/10 16:52	13.1	H2-AI-1050B.1	11/18/10 16:52	2.8
H2-FIC-1111.1	11/18/10 16:53	0.923	H2-FIC-1104.1	11/18/10 16:53	12.3	H2-AI-1050A.1	11/18/10 16:53	13.1	H2-AI-1050B.1	11/18/10 16:53	2.9
H2-FIC-1111.1	11/18/10 16:54	0.923	H2-FIC-1104.1	11/18/10 16:54	13.1	H2-AI-1050A.1	11/18/10 16:54	13	H2-AI-1050B.1	11/18/10 16:54	3
H2-FIC-1111.1	11/18/10 16:55	0.923	H2-FIC-1104.1	11/18/10 16:55	12.3	H2-AI-1050A.1	11/18/10 16:55	13	H2-AI-1050B.1	11/18/10 16:55	3.1
H2-FIC-1111.1	11/18/10 16:56	0.923	H2-FIC-1104.1	11/18/10 16:56	13.2	H2-AI-1050A.1	11/18/10 16:56	13	H2-AI-1050B.1	11/18/10 16:56	2
H2-FIC-1111.1	11/18/10 16:57	0.922	H2-FIC-1104.1	11/18/10 16:57	12.4	H2-AI-1050A.1	11/18/10 16:57	13	H2-AI-1050B.1	11/18/10 16:57	3
H2-FIC-1111.1	11/18/10 16:58	0.922	H2-FIC-1104.1	11/18/10 16:58	13.2	H2-AI-1050A.1	11/18/10 16:58	13	H2-AI-1050B.1	11/18/10 16:58	1.9
H2-FIC-1111.1	11/18/10 16:59	0.922	H2-FIC-1104.1	11/18/10 16:59	12.8	H2-AI-1050A.1	11/18/10 16:59	13	H2-AI-1050B.1	11/18/10 16:59	3.1
H2-FIC-1111.1	11/18/10 17:00	0.922	H2-FIC-1104.1	11/18/10 17:00	13	H2-AI-1050A.1	11/18/10 17:00	13	H2-AI-1050B.1	11/18/10 17:00	1.9

HP2 Reformer

Fuel Flow - (RFG) MMSCFD			Fuel Flow - (PSA OFFGAS) MMSCFD			NOx - PPM			O2 - Percent		
tag	time	FG Flow MMSCFD, 1 min ave.	tag	time	FG Flow MMSCFD, 1 min ave.	tag	time	Nox (ppm), 1 min ave.	tag	time	O_2 (%), 1 min ave.
H2-FIC-1111.1	11/18/10 17:01	0.922	H2-FIC-1104.1	11/18/10 17:01	13.2	H2-AI-1050A.1	11/18/10 17:01	13	H2-AI-1050B.1	11/18/10 17:01	3.4
H2-FIC-1111.1	11/18/10 17:02	0.922	H2-FIC-1104.1	11/18/10 17:02	13.3	H2-AI-1050A.1	11/18/10 17:02	13	H2-AI-1050B.1	11/18/10 17:02	2
H2-FIC-1111.1	11/18/10 17:03	0.921	H2-FIC-1104.1	11/18/10 17:03	13.4	H2-AI-1050A.1	11/18/10 17:03	13	H2-AI-1050B.1	11/18/10 17:03	3.3
H2-FIC-1111.1	11/18/10 17:04	0.921	H2-FIC-1104.1	11/18/10 17:04	12.8	H2-AI-1050A.1	11/18/10 17:04	13	H2-AI-1050B.1	11/18/10 17:04	1.9
H2-FIC-1111.1	11/18/10 17:05	0.921	H2-FIC-1104.1	11/18/10 17:05	13.6	H2-AI-1050A.1	11/18/10 17:05	13	H2-AI-1050B.1	11/18/10 17:05	3.5
H2-FIC-1111.1	11/18/10 17:06	0.921	H2-FIC-1104.1	11/18/10 17:06	12.7	H2-AI-1050A.1	11/18/10 17:06	13	H2-AI-1050B.1	11/18/10 17:06	1.8
H2-FIC-1111.1	11/18/10 17:07	0.921	H2-FIC-1104.1	11/18/10 17:07	13.6	H2-AI-1050A.1	11/18/10 17:07	13	H2-AI-1050B.1	11/18/10 17:07	3.2
H2-FIC-1111.1	11/18/10 17:08	0.921	H2-FIC-1104.1	11/18/10 17:08	12.4	H2-AI-1050A.1	11/18/10 17:08	13	H2-AI-1050B.1	11/18/10 17:08	1.9
H2-FIC-1111.1	11/18/10 17:09	0.92	H2-FIC-1104.1	11/18/10 17:09	13.5	H2-AI-1050A.1	11/18/10 17:09	13	H2-AI-1050B.1	11/18/10 17:09	3.2
H2-FIC-1111.1	11/18/10 17:10	0.92	H2-FIC-1104.1	11/18/10 17:10	12.4	H2-AI-1050A.1	11/18/10 17:10	13	H2-AI-1050B.1	11/18/10 17:10	2.1
H2-FIC-1111.1	11/18/10 17:11	0.92	H2-FIC-1104.1	11/18/10 17:11	13.2	H2-AI-1050A.1	11/18/10 17:11	13	H2-AI-1050B.1	11/18/10 17:11	3.2
H2-FIC-1111.1	11/18/10 17:12	0.92	H2-FIC-1104.1	11/18/10 17:12	12.4	H2-AI-1050A.1	11/18/10 17:12	13	H2-AI-1050B.1	11/18/10 17:12	2.2
H2-FIC-1111.1	11/18/10 17:13	0.92	H2-FIC-1104.1	11/18/10 17:13	13.1	H2-AI-1050A.1	11/18/10 17:13	13	H2-AI-1050B.1	11/18/10 17:13	3.3
H2-FIC-1111.1	11/18/10 17:14	0.92	H2-FIC-1104.1	11/18/10 17:14	12.6	H2-AI-1050A.1	11/18/10 17:14	13	H2-AI-1050B.1	11/18/10 17:14	2.3
H2-FIC-1111.1	11/18/10 17:15	0.92	H2-FIC-1104.1	11/18/10 17:15	13.1	H2-AI-1050A.1	11/18/10 17:15	13	H2-AI-1050B.1	11/18/10 17:15	3.2
H2-FIC-1111.1	11/18/10 17:16	0.919	H2-FIC-1104.1	11/18/10 17:16	12.6	H2-AI-1050A.1	11/18/10 17:16	13	H2-AI-1050B.1	11/18/10 17:16	2.1
H2-FIC-1111.1	11/18/10 17:17	0.919	H2-FIC-1104.1	11/18/10 17:17	13.1	H2-AI-1050A.1	11/18/10 17:17	13	H2-AI-1050B.1	11/18/10 17:17	3.2
H2-FIC-1111.1	11/18/10 17:18	0.919	H2-FIC-1104.1	11/18/10 17:18	13.1	H2-AI-1050A.1	11/18/10 17:18	13	H2-AI-1050B.1	11/18/10 17:18	2.2
H2-FIC-1111.1	11/18/10 17:19	0.919	H2-FIC-1104.1	11/18/10 17:19	13.1	H2-AI-1050A.1	11/18/10 17:19	13	H2-AI-1050B.1	11/18/10 17:19	3.2
H2-FIC-1111.1	11/18/10 17:20	0.919	H2-FIC-1104.1	11/18/10 17:20	13.1	H2-AI-1050A.1	11/18/10 17:20	13	H2-AI-1050B.1	11/18/10 17:20	2.6
H2-FIC-1111.1	11/18/10 17:21	0.919	H2-FIC-1104.1	11/18/10 17:21	13	H2-AI-1050A.1	11/18/10 17:21	13	H2-AI-1050B.1	11/18/10 17:21	3.4
H2-FIC-1111.1	11/18/10 17:22	0.919	H2-FIC-1104.1	11/18/10 17:22	13	H2-AI-1050A.1	11/18/10 17:22	13	H2-AI-1050B.1	11/18/10 17:22	2.7
H2-FIC-1111.1	11/18/10 17:23	0.919	H2-FIC-1104.1	11/18/10 17:23	13	H2-AI-1050A.1	11/18/10 17:23	13	H2-AI-1050B.1	11/18/10 17:23	3.4
H2-FIC-1111.1	11/18/10 17:24	0.919	H2-FIC-1104.1	11/18/10 17:24	13	H2-AI-1050A.1	11/18/10 17:24	13	H2-AI-1050B.1	11/18/10 17:24	2.6
H2-FIC-1111.1	11/18/10 17:25	0.919	H2-FIC-1104.1	11/18/10 17:25	13	H2-AI-1050A.1	11/18/10 17:25	13	H2-AI-1050B.1	11/18/10 17:25	3.2
H2-FIC-1111.1	11/18/10 17:26	0.919	H2-FIC-1104.1	11/18/10 17:26	13	H2-AI-1050A.1	11/18/10 17:26	13	H2-AI-1050B.1	11/18/10 17:26	2.4
H2-FIC-1111.1	11/18/10 17:27	0.919	H2-FIC-1104.1	11/18/10 17:27	13	H2-AI-1050A.1	11/18/10 17:27	13	H2-AI-1050B.1	11/18/10 17:27	3.2
H2-FIC-1111.1	11/18/10 17:28	0.919	H2-FIC-1104.1	11/18/10 17:28	13	H2-AI-1050A.1	11/18/10 17:28	12.9	H2-AI-1050B.1	11/18/10 17:28	2.4
H2-FIC-1111.1	11/18/10 17:29	0.919	H2-FIC-1104.1	11/18/10 17:29	13	H2-AI-1050A.1	11/18/10 17:29	12.9	H2-AI-1050B.1	11/18/10 17:29	2.5
H2-FIC-1111.1	11/18/10 17:30	0.919	H2-FIC-1104.1	11/18/10 17:30	12.9	H2-AI-1050A.1	11/18/10 17:30	12.9	H2-AI-1050B.1	11/18/10 17:30	2.6
H2-FIC-1111.1	11/18/10 17:31	0.92	H2-FIC-1104.1	11/18/10 17:31	12.9	H2-AI-1050A.1	11/18/10 17:31	12.9	H2-AI-1050B.1	11/18/10 17:31	2.6
H2-FIC-1111.1	11/18/10 17:32	0.92	H2-FIC-1104.1	11/18/10 17:32	12.9	H2-AI-1050A.1	11/18/10 17:32	12.9	H2-AI-1050B.1	11/18/10 17:32	2.7
H2-FIC-1111.1	11/18/10 17:33	0.92	H2-FIC-1104.1	11/18/10 17:33	13	H2-AI-1050A.1	11/18/10 17:33	12.9	H2-AI-1050B.1	11/18/10 17:33	2.7
H2-FIC-1111.1	11/18/10 17:34	0.92	H2-FIC-1104.1	11/18/10 17:34	12.5	H2-AI-1050A.1	11/18/10 17:34	12.9	H2-AI-1050B.1	11/18/10 17:34	2.8
	Average	0.933			12.98						

	RFG	PSA OFFGAS	PSA OFFGAS
Sample Date/Time	11/18/2010 10:26	11/16/2010 09:50	11/18/2010 10:35
Sample Id	1081372	1080561	1081376
sp grav,calc	0.5729	0.7432	0.7852
(LHV) Net Heat BTU/FT3	938.4	233.7	231.6
H2	30.41	44.46	41
C1	51.52	10.95	11.7
C2	5.55	0	0
C2=	0.32	0	0
C3	5.63	0	0
C3=	0.66	0	0
H2S	0	0	0
IC4	1.34	0	0
NC4	1.95	0	0
IC4=	0.75	0	0
C5=	0	0	0
IC5	0.32	0	0
NC5	0.23	0	0
C6 plus	0.14	0	0
CO2	0.09	39.91	42.45
O2	0	0	0
N2	1.08	0.83	0.82
CO	0	3.85	4.03
(HHV) Gross Heat BTU/FT3	1038.5	267.1	264
MW gas	16.248	21.3543	22.5786
Kg C/Kg-mol gas	12.2397	6.5644	6.9813
Kg C/Kg Gas	0.7533	0.3074	0.3092
Kg CO2/MMBTU	50.8706	106.0877	114.1452
=100%,calc	100	100	100