EMISSION TEST REPORT

of one

Fluidized Catalytic Cracking Regenerator (F-1603) (Emission Point No. AA-051)

at the

Chevron Product Company Refinery

located in

Pascagoula, Mississippi

Prepared for

CHEVRON PRODUCTS COMPANY

May 7, 2007

TRC Project No. 150009

TRC

EMISSION TEST REPORT

of one

Fluidized Catalytic Cracking Regenerator (F-1603) (Emission Point No. AA-051)

at the

Chevron Product Company Refinery

located in

Pascagoula, Mississippi

Prepared for

CHEVRON PRODUCTS COMPANY

May 7, 2007

TRC Project No. 150009

TABLE OF CONTENTS

INTRODUCTION 1
Table 1: Background Data 2

SUMMARY OF RESULTS 3
Table 2: Executive Summary EPN AA-051 (F-1603) 3

PROCESS DESCRIPTION 4

ANALYTICAL TECHNIQUE 5
Table 3: Analytical Instrumentation 5
Figure 1: Gaseous Sample System Diagram 6
Figure 2: Particulate Matter Sample System Diagram 8

QUALITY ASSURANCE ACTIVITIES 10

APPENDICES
A. Detailed Summary Results
B. Quality Assurance Activities
C. Example Calculations
D. Field and Laboratory Data Sheets
E. Unit Operational Data
F. TRC Datalog Files
G. Calibrations and Certifications

INTRODUCTION

Emission tests were conducted on one Fluidized Catalytic Cracking (FCC) Regenerator unit at Chevron Product's refinery in Pascagoula, Mississippi. The purpose of these tests was to determine the compliance status with regards to Mississippi Department of Environmental Quality (MDEQ) Permit No. 1280-00058 and Code of Federal Regulations (CFR), Title 40, Part 60, Section 106(b). TRC Air Measurements conducted these tests on May 7, 2007.

Quantities of particulate matter (PM), carbon dioxide (CO_2), oxygen (O_2), carbon monoxide (CO), oxides of nitrogen (NOx), sulfur dioxide (SO_2), hydrogen cyanide (HCN), total volatile organic compounds (VOC), and percent opacity were measured in the exhaust stack of the unit. The emissions tests followed the procedures set forth in the 40CFR60, Appendix A, Methods 1, 2, 3A, 4, 5F, 6C, 7E, 9, 10, 25A, and CTM-033. Table 1 summarizes the background information pertinent to these tests.

This report has been reviewed and approved for submittal to the U.S. EPA and MDEQ by the following representatives:

TRC Air Measurements	Chevron Products

TABLE 1
BACKGROUND DATA

Source Owner/Operator:	Chevron Products Company 250 Industrial Road Pascagoula, Mississippi 39581 Attn: Kristi Mitchum (228) 938-7678 TEL (228) 938-4682 FAX
Test Contractor:	TRC Air Measurements 9225 U.S. Hwy. 183 South Austin, Texas 78747 Attn: John Wood (512) 243-0202 TEL (512) 243-0222 FAX
Test Date:	May 7, 2007
Location:	Chevron Refinery in Pascagoula, Mississippi
Process Description:	This submittal addresses the emissions from one FCC Regenerator in the 16 plant section of this refinery.
Emission Point:	Emission Point No. AA-051 (F-1603)
Test Methods:	EPA Method 1 for traverse point layout EPA Method 2 for stack differential pressure EPA Method 3A for O_2 and CO_2 concentrations EPA Method 4 for stack gas moisture content EPA Method 5F for particulate matter sampling EPA Method 6C for SO2 concentration EPA Method 7E for NOx concentration EPA Method 9 for Opacity EPA Method 10 for CO concentration EPA Method 25A for Volatile Organic Compounds EPA CTM-033 for Hydrogen Cyanide
Regulatory Applications:	40CFR60.106(b), MDEQ Permit # 1280-00058

SUMMARY OF RESULTS

Exhaust gas from one FCC Regenerator unit was tested to determine gaseous, and non-sulfate particulate matter emissions. The testing was performed to show compliance with the regulations set forth in the MDEQ permit 1280-00058. TRC Air Measurements of Austin, Texas conducted this testing on May 7, 2007.

Table 2 provides the executive summary of results for the stack sampling of Unit F-1603. This table presents the gaseous mass emissions in pounds per hour (lbs/hr) and tons per year (tons/yr).

TABLE 2:
Executive Summary of Results

Pollutant	Emissions (lbs/hr)	Permit Limit (Lbs/hr)	Emissions (tons/yr)	Permit Limit (tons/yr)
NOx	14.31	375.00	62.68	326.00
CO	138.12	588.00	604.95	533.00
SO2	6.59	500.00	28.86	153.50
VOC	0.51	59.13	2.22	25.90
HCN	0.42	4.00	1.83	17.50
PM	1.57	111.00	6.89	121.50
Opacity	0%		Permit Limit = 30%	

Data used to generate this table is supported by the documents presented in the appendices of this report. Appendix A contains the detailed summary of results. All documented quality assurance activities used to ensure accuracy are reported in Appendix B. Examples calculations representing the results are shown in Appendix C. Appendix D contains all field and laboratory data sheets, including documentation from Data Analysis Technologies, Inc regarding hydrogen cyanide testing. Appendix E includes the operational data for the unit during the test. TRC datalog files are included in appendix F. Appendix G contains the calibrations and certifications for any equipment or gas used during the tests.

PROCESS DESCRIPTION

Chevron Products Company owns and operates the Chevron Refinery in Pascagoula, Mississippi. Emission testing was conducted on a fluidized catalytic cracking unit (FCC) located at this facility.

The FCC unit converts heavy feed into C3/C4 olefins as feed for the Olefin Splitter Plant, a high quality cracked gasoline, light cycle oil used in diesel blending, and a bottoms product used as bunker or fuel oil. The main purpose of the fluid catalytic cracking operation is to increase the quantities of salable products such as C3/C4 olefins and gasoline that can be produced from a barrel of crude oil.

The fluid catalytic cracking process uses high temperatures and a catalyst to crack or break up the large, complex hydrocarbon molecules in the heavy vacuum gas oil feed into smaller, simpler molecules. The resulting mixture of hydrocarbons from the reactor can be termed a synthetic crude oil. This synthetic crude oil (reaction mix) is separated into the required products by fractional distillation in the FCC Main Fractionator & Gas Recovery Section.

The hot, circulating catalyst not only controls the cracking reactions, but also supplies much of the heat required for vaporization of the fresh gas oil feed, the recycle feed and for the cracking reactions. During the cracking reactions, coke is deposited on the catalyst particles. Burning coke off the catalyst regenerates the catalysts and also heats it to the required temperature.

ANALYTICAL TECHNIQUE

The sampling and analysis procedures used during these tests conformed in principle with those outlined in the 40CFR60, Appendix A, Methods 1, 2, 3A, 4, 5F, 6C, 7E, 9, 10, 25A, and CTM-033. Table 3 lists the instruments and detection principles used for these analyses.

TABLE 3: ANALYTICAL INSTRUMENTATION

Parameter	Model and Manufacturer Serial Number	Range Capabilities (ppm or vol%)	Span Value(s) this Project (ppm or vol%)	Sensitivity (ppm or vol%)	Response Time (sec)	Detection Principle
NOx	TECO 42C 406505075	0-10 0-30 0-50 0-100 0-300	0-100	0.01	1.7	Thermal reduction of NOx to NO Chemiluminescence of reaction of NO with O2. Detection by PMT. Inherently linear for range capabilities.
CO	TECO 48C 48C-56742-310	0-10 0-30 0-50 0-100	0-100	0.01	10	Infrared absorption, gas filter correlation detector (prevents CO2 interference). Microprocessor based linearization.
O2 CO2	Servomex 1400 014206-2804 01415C-2821	0-5 0-25	0-25	0.01	15	Paramagnetic Cell Infrared Absorption
SO2	Bovar 90-721AT2-7642-1	0-30 0-100	0-100	0.01	10	Continuous flame ionization detector
PM/PM10	AND HR 120	0-100 grams	n.a.	0.1 mg	n.a.	Analytical balance
THC	JUM 9303161-33	0-10	0<x<1	0.01	10	Continuous flame ionization detector
Temp.	Omega HH82	-256-2502 °F	0.1°F	n.a.	n.a.	chromel-alumel, K-type thermo-couple with digital thermometer.

The sampling and analysis system used to determine gaseous emission concentrations of NOx, SO_2, VOC, CO, CO_2 and O_2 is depicted in Figure 1. Stack gas entered the system through a stainless steel probe with a glass wool in-stack filter (i.e. filter and probe heated greater than 220 °F). The sample was transported via 3/8-inch heat-traced Teflon® tubing to ground level via a heated stainless steel/Teflon® diaphragm pump. The sample is then transported through a specially designed stainless steel minimum-contact condenser which dried the sample without removing the pollutants of interest. From there, the sample is directed into the sample manifold where the sample is partitioned to the analyzers through glass and stainless steel rotometers that control the flow of the sample.

Figure 1 shows that the sampling system was equipped with a separate path through which a calibration gas could be delivered to the probe and back through the entire sampling system. This allowed for convenient performance of system

the entire sampling system. This allowed for convenient performance of system bias checks as required by the EPA testing methods.

FIGURE 1
SAMPLE SYSTEM DIAGRAM

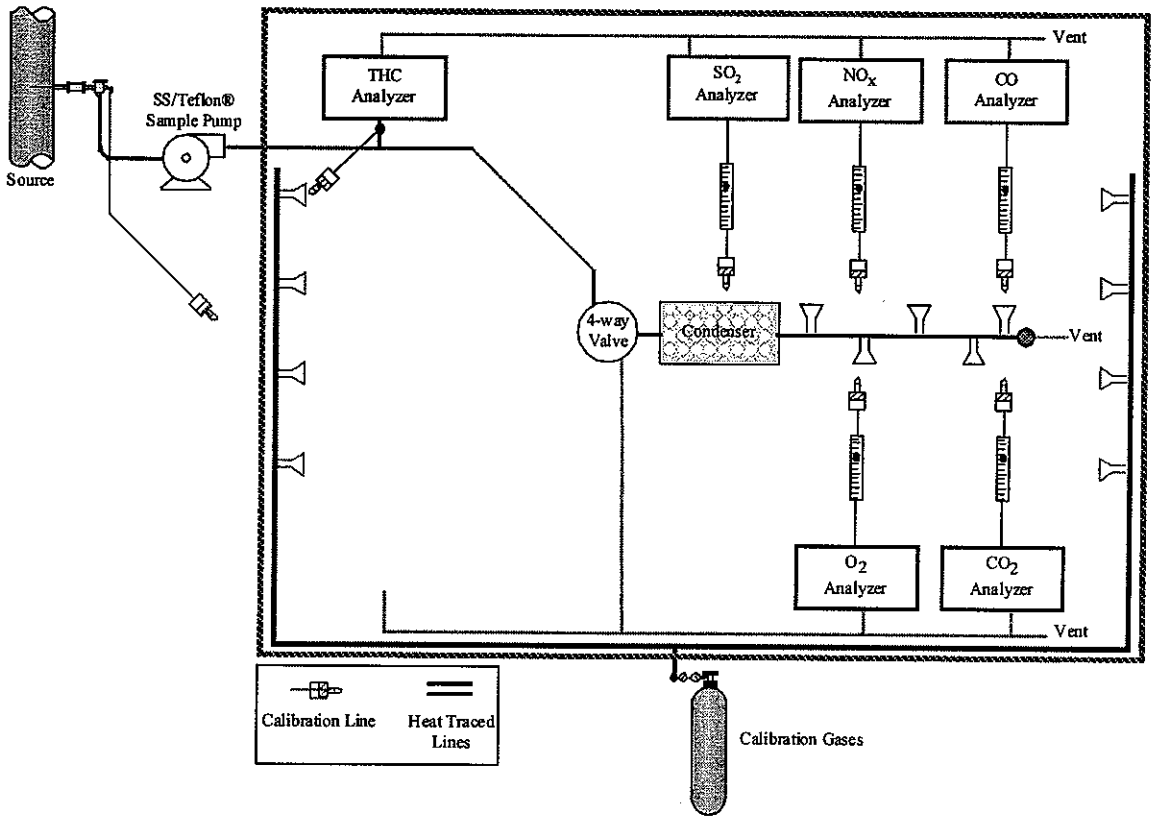

The test matrix consisted of three sixty-minute test runs in accordance with the sampling procedures of 40CFR60.

EPA Method 1 was utilized for selection of the traverse. The stack configurations and sample port locations meet established EPA Method 1 criteria.

EPA Method 2 was followed to determine the stack differential pressure. Twelve traverse points were tracked throughout each test run. In addition to differential pressure, stack temperature was recorded.

The O_2 and CO_2 concentration measurements used in determination of stack gas molecular weight were measured in accordance with the procedures of EPA Method 3A. Instrumental analysis was used in lieu of the Orsat or Fyrite techniques. A paramagnetic O_2 analyzer and an infrared absorption CO_2 analyzer were utilized for these emission tests.

Moisture content of the stack gas was measured by EPA Method 4. This data, collected as part of the PM train, was used to calculate dry gas fraction and molecular weight of the stack gas.

Method 5F was performed to measure non-sulfate particulate matter as followed in 40CFR60. Figure 2 presents the sample system diagram for the particulate matter sample train. Figure 2 shows that a gaseous sample was pulled through a stainless steel nozzle and heated glass probe to a heated glass fiber filter. This portion of the sample train constitutes the "front half" assembly. The nozzle was sized such that an isokinetic sampling rate (i.e. sampling at the same rate as the stack velocity) could be maintained. Following the filter, the sample was pulled through an impinger train to a dry gas meter and sample pump. The impingers were charged with deionized water. The PM emission rate results presented in this report provide the EPA "front half" analysis only.

The probe and nozzle were rinsed with deionized water following each test run. These rinses were saved and analyzed for weight gain. The weight gain of the water rinse plus the weight gain of the filter constitute the "front half" PM analysis. The impinger contents from each test run were saved after weighing the impingers for moisture content determination.

The front-half catch of all three test runs plus the water and filter blank were analyzed for non-sulfate particulate. All laboratory analysis was conducted by Atmospheric Analysis & Consulting, headed by Sucha Parmar. Information concerning this analysis is contained in Appendix D.

FIGURE 2
PARTICULATE MATTER SAMPLE SYSTEM

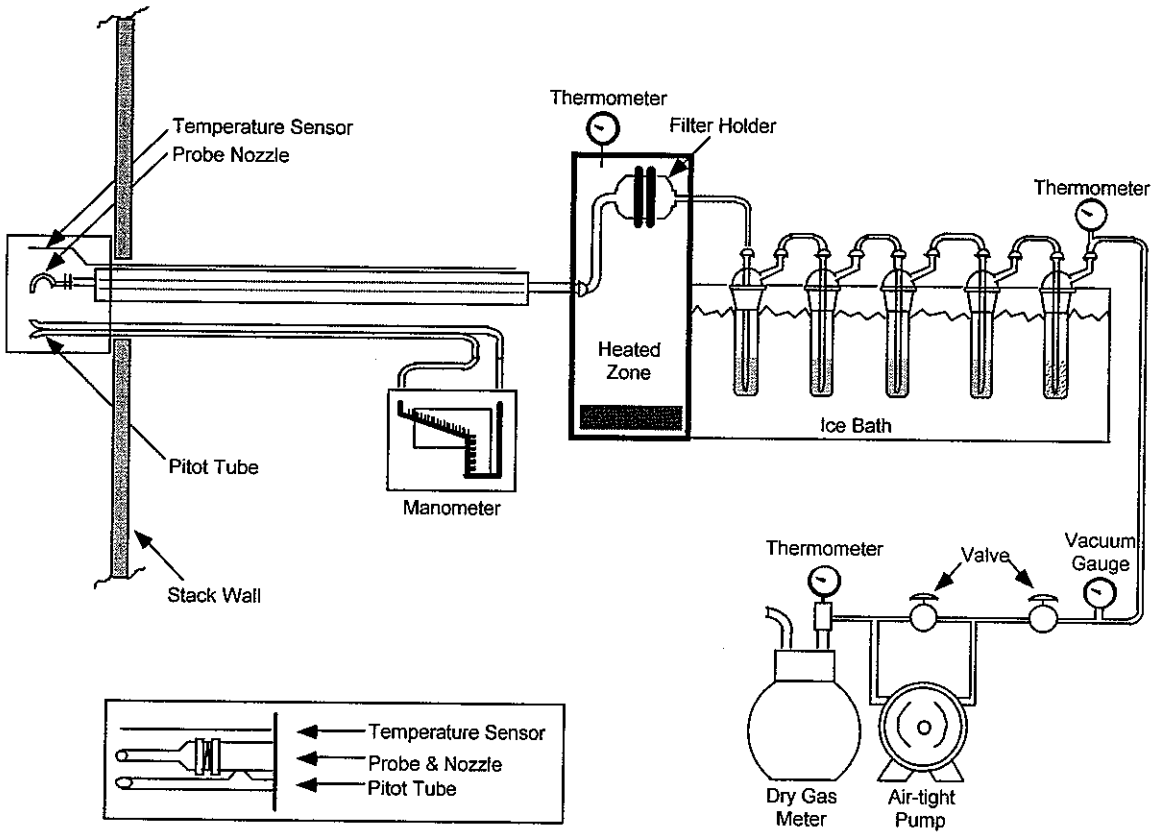

Sulfur dioxide measurements were quantified via instrumental analysis with a chemiluminescence analyzer. Procedures followed those set forth in EPA Method 6C.

EPA Method 7E was used for measurement of NOx concentrations. A chemiluminescence cell analyzer was used. The NOx mass emission rates were calculated as if all the NOx were in the form of NO2. This approach corresponds to EPA's convention.

EPA Method 9 was performed in order to determine opacity of stack exhaust. Visual observations are made by a trained and certified reader to determine percent opacity.

CO concentrations were quantified during the tests in accordance with procedures set forth in EPA Method 10. A continuous non-dispersive infrared (NDIR)

analyzer was used for this purpose. This analyzer is equipped with a gas correlation filter that also removes any interference from CO2 or other combustion products, eliminating the need for ascarite traps and the associated correction factors.

Total hydrocarbon concentration (also reported as VOC) was measured using EPA method 25A. A continuous flame ionization detection analyzer was used to determine THC concentration in PPM.

QUALITY ASSURANCE ACTIVITIES

A number of quality assurance activities were undertaken to ensure the accuracy of the test results. This section of the report and the documentation contained in Appendix B support each quality assurance activity that was performed.

All sampling and analyses were conducted on-site to afford any interested parties the opportunity to observe all aspects of the test and to circumvent the possibility of sample loss or contamination during transport.

Each instrument's response was checked and adjusted in the field prior to the collection of data via multi-point calibration. The instrument's linearity was checked by first adjusting the zero and span responses to zero (nitrogen or air) and an upscale calibration gas in the range of the expected concentrations. The instrument response was then challenged with other calibration gases of known concentration and accepted as being linear if the response of the other calibration gases agreed within $\pm$ 2 percent of range of the predicted values. The results of the multi-point linearity checks are provided in Appendix B.

In addition to the initial linearity checks, the calibration error checks were repeated as required throughout the tests. Anytime an adjustment was made to an analyzer, the calibration error test was repeated. During typical emissions tests, adjustments to the analyzer will be due to one of three reasons. If the post test run calibration check showed that the analyzer drift was approaching the 3% allowable, the technician may have chosen to reset the analyzer back to the correct setting before continuing with the next test run. Anytime the analyzer drift exceeded 3%, recalibration of the analyzer was performed as required by the test method. Additionally, analyzer span settings could be changed during the tests to account for changing concentrations. Anytime an adjustment was made to an analyzer for any of these reasons, the calibration error check (and bias check) was repeated before continuing.

Before and after each test run, the analyzers were checked for zero and span drift. This allowed each test run to be bracketed by calibrations and documented the precision of the data just collected. Documentation of drift also allowed for the use of Equation 7E-5 for correction of the observed emission concentrations. Calibrations were made through the entire sample system (via the bias check valve) each time zero and span drift checks were made. The criterion for acceptable data is that the instrument drift is no more than 3 percent of the full-scale response or 5% provided that additional QA procedures are followed before proceeding with the next run. The quality assurance worksheets in Appendix B

summarize all multipoint calibration checks and zero to span checks performed during the tests.

The use of Equation 7E-5 requires documentation of both the initial and final zero and calibration responses. When two consecutive test runs were conducted immediately after one another, the final drift for the previous run was used for the initial calibration response of the subsequent run. In cases where there was a sufficient delay between test runs to deem this strategy invalid, a separate initial calibration (i.e. bias check procedure) was conducted and the response from this calibration was used in Equation 7E-5.

The instrumental sampling systems were leak checked by demonstrating that a vacuum greater than 10" Hg could be held for at least 1 minute with a decline of less than 1" Hg. A leak test was conducted after a sample system was set up and before that system was dismantled. This test was conducted to ensure that ambient air had not diluted the sample. Any leakage detected prior to the tests was repaired and another leak check conducted before testing commenced. No leaks were found during the post-test leak checks.

The absence of leaks in the sampling system was also verified by system bias checks. The sampling system's integrity was tested by comparing the responses of each of the analyzers used to a calibration gas introduced via two paths. The first path was into the analyzer via the zero/span calibration manifold. The second path was to introduce a calibration gas into the sample system at the sample probe via the calibration line and switching valve. Any difference in the instrument responses by these two methods was attributed to sampling system bias or leakage. Bias checks were conducted prior to and upon completion of testing on all analyzers. The quality assurance data worksheets in Appendix B show that the analyzer responses via both sample paths agreed within acceptable limits in all cases.

Bias checks were also conducted at other times throughout the tests as required by the test method. Anytime adjustment to the analyzer or drifts in excess of 3% was recorded necessitated a repeat of the calibration error check, the bias check was also repeated.

The control gases used to calibrate the instruments were analyzed and certified by the compressed gas vendors to $\pm$ 1% accuracy or EPA Protocol 1 (EPA G1 certification). The gas calibration sheets as prepared by the vendor are contained in Appendix G.

The Method 5F dry gas meter was calibrated prior to testing in accordance with

EPA methodology. A post-test calibration check was also conducted on this meter. A standard dry gas meter traceable to NIST was used for these calibrations. Calibration certification documentation of the dry gas meter can be found in Appendix G. That documentation shows that the difference between the pre and post test calibrations differed by less than 5% as required by the regulations.

EPA Method 5 quality assurance activities began during preparation for these tests. All glassware was thoroughly washed, rinsed, dried, and stored with protection to prevent contamination. Pre-weighed filters were sealed against contamination and packed safely. De-ionized water was used for rinsing of the sampling train. A blank of the water were treated in the same manner as the samples and retained for evaporation and weighing for contaminants. A blank filter was also weighed after treating it in the same manner as the filters used during sampling.

Isokinetic sampling rates were achieved and the isokinetics were checked in the field at each traverse point as well as over the entire test run period. Isokinetics between 90% and 110% over the test run are required for Method 5. The PM calculation spreadsheets of Appendix D show that the isokinetics were within acceptable limits in all cases.

TRC collected and reported the enclosed test data in accordance with the procedures and quality assurance activities described in this test report. TRC makes no warranty as to the suitability of the test methods. TRC assumes no liability relating to the interpretation and use of the test data.

APPENDIX A:
DETAILED SUMMARY OF RESULTS

Compliance Testing Gaseous Summary of Results

Operator/Plant: **Chevron Pascagoula**
Location: Pascagoula, MS
Source: **F-1603**
Technicians: John Wood

Test Run ID	1603 Run C-1	1603 Run C-2	1603 Run C-3	
Date	5/7/2007	5/7/2007	5/7/2007	
Start Time	14:45	16:53	18:44	
Stop Time	15:45	17:53	19:44	
Operational Data				
Fuel Flow (MSCFH)	8.66	8.62	8.69	
Ambient Conditions				
Atmospheric Pressure (in. Hg)	30.19	30.17	30.14	
Temperature (°F): Dry bulb	61.0	62.0	62.0	
(°F): Wet bulb	76.0	76.0	76.0	
Humidity (lbs H_2O / lb air)	0.0223	0.0220	0.0221	
Measured Emissions				
NOx (ppmvd)	15.47	12.64	11.93	
CO (ppmvd)	208.92	214.74	211.72	
O_2 (vol %, dry)	2.02	1.90	1.79	
CO_2 (vol %, dry)	16.69	16.73	16.85	
SO_2 (ppmvd)	3.85	1.16	8.32	
VOC (ppmvd)	0.96	0.39	0.12	
Stack Volumetric Flow				
Stack Flow Rate (SCFH, dry - via M1-4)	9.06E+06	9.01E+06	8.84E+06	
Calculated Emission Rates				Averages
NOx (lbs/hr) *Permit Limit 375*	16.74	13.60	12.59	14.31
NOx (tons/year) *Permit Limit 326*	73.33	59.57	55.16	62.68
CO (lbs/hr) *Permit Limit 588*	137.62	140.64	136.09	138.12
CO (tons/year) *Permit Limit 533*	602.78	615.99	596.09	604.95
SO_2 (lbs/hr) *Permit Limit 500*	5.79	1.74	12.23	6.59
SO_2 (tons/yr) *Permit Limit 153.50*	25.38	7.63	53.57	28.86
VOC (lbs/hr) *Permit Limit 59.13*	1.00	0.40	0.12	0.51
VOC (tons/yr) *Permit Limit 25.9*	4.36	1.76	0.53	2.22
HCN (lbs/hr) *Permit Limit 4.0*	0.27	0.59	0.39	0.42
HCN (tons/yr) *Permit Limit 17.5*	1.20	2.58	1.70	1.83

Emissions testing conducted by TRC Air Measurements, Austin, Texas.

Detailed Particulate Matter Summary of Results

Plant: **Chevron Pascagoula**
Location: Pascagoula, MS
Technicians: TO, TB, JW
Source: **F-1603**
EPN: **AA 051**

Test Run Designation	1603 PM-1	1603 PM-2	1603 PM-3
Date	5/7/07	5/7/07	5/7/07
Start Time	14:42	16:52	18:41
Stop Time	15:44	17:56	19:43
Stack Gas Sampling Data			
Box No.	jmw	blue	art
Sample Time Length (min)	60	60	60
Atmospheric Pressure (" Hg)	30.19	30.17	30.14
Avg. Stack Temperature (°R)	1015	1026	1032
Avg. Meter Temperature (°F)	80.9	84.5	79.0
Average √ΔP	1.59	1.59	1.55
Average ΔH	1.06	1.06	1.01
Sample Volume Metered (ft3)	36.404	36.903	35.507
Sample Volume at STP (DSCF)	35.156	35.375	34.346
Moisture (% volume)	9.95	9.76	9.07
Molecular Weight (lbs./lb-mole)	29.48	29.51	29.61
Nozzzle #	211	211	211
Nozzle Area (ft2)	0.00017087	0.00017087	0.00017087
% Isokinetic	**99.2**	**100.4**	**99.3**
Particulate Matter Analysis			
Total non-sulfate particulate matter (g)	0.00102	0.00349	0.00384
(lbs/dscf) Front Half Analysis	6.40E-08	2.18E-07	2.46E-07
(lbs/hr) Front Half Analysis	0.58	1.96	2.18
Avg. (lbs/hr) Front Half Analysis		1.57	
Avg. (tons/yr) Front Half Analysis		6.89	

Test Run Designation	1603 PM-1	1603 PM-2	1603 PM-3
Date	5/7/07	5/7/07	5/7/07
Start Time	14:42	16:52	18:41
Stop Time	15:44	17:56	19:43
Stack Moisture & Molecular Wt			
CO2 (%)	16.69	16.73	16.85
O2 (%)	2.02	1.90	1.79
Beginning Meter Reading (ft3)	456.891	497.649	535.073
Ending Meter Reading (ft3)	493.295	534.552	570.580
Beginning Impinger Wt (g)	2859.6	2856.9	2843.3
Ending Impinger Wt. (g)	2942.0	2938.0	2916.0
Dry Gas Meter Factor (Kd)	0.9779	0.9779	0.9779
Average DGM Temperature (°F)	80.9	84.5	79.0
Absolute Stack Pressure (Ps, in Hg)	30.21	30.19	30.16
Stack Gas Moisture (% volume)	9.95	9.76	9.07
Dry Gas Fraction	0.900	0.902	0.909
Stack Gas MW (lbs/lb-mole)	29.48	29.51	29.61
Pitot Tube / Stack Temperature Data			
Pitot Tube Factor	0.84	0.84	0.84
	ΔP ("H20)	ΔP ("H20)	ΔP ("H20)
ΔP #1	2.45	2.60	2.30
ΔP #2	2.50	2.70	2.30
ΔP #3	2.40	2.60	2.30
ΔP #4	2.55	2.60	2.65
ΔP #5	2.60	2.45	2.45
ΔP #6	2.50	2.40	2.40
ΔP #7	2.50	2.35	2.45
ΔP #8	2.60	2.40	2.30
ΔP #9	2.50	2.40	2.30
ΔP #10	2.80	2.40	2.60
ΔP #11	2.50	2.70	2.50
ΔP #12	2.40	2.60	2.40
Sum of Square Root of ΔP's	19.06	19.03	18.63
Number of Points	12	12	12
Average Square Root of ΔP's	1.589	1.586	1.553
Average Stack Temperature (°F)	555	566	572
Stack Static Pressure (in. H2O)	0.30	0.30	0.30
Stack Diameter (in)	89.5	89.5	89.5
Stack Area (ft2)	43.69	43.69	43.69
Stack Velocity (ft/min)	7306	7333	7191
Stack Flow,wet (ACFM)	319206	320359	314187
Stack Flow,dry (SCFH)	**9.06E+06**	**9.01E+06**	**8.84E+06**
Stack Flow,dry (SCFH)	**9061343**	**9008745**	**8841964**

Testing by TRC Air Measurements, Austin, Texas

APPENDIX B:
QUALITY ASSURANCE ACTIVITIES

TRC Air Measurements Quality Assurance/Quality Control
Initial Linearity, Sample System Bias, Analyzer Drift, Method 7E-5 Correction

Date: 05/07/07
Client: Chevron Pascagoula
Location: Pascagoula, MS

Project No.: 150009
Technician: John Wood

	Analyzer	Model	Serial #	Calibration Gas Certified Values Span	Low Gas	Mid Gas	High Gas
NOx (ppmv)	TECO	42C	42CHL-57056-311	84.70	24.90	45.00	84.70
CO (ppmv)	TECO	48	48-35087-249	286.00	85.20	143.70	286.00
O2 (%)	Servomex	1400	014206-2804	20.90	4.48	12.00	20.90
CO2 (%)	Servomex	1400	01415C-2821	20.80	4.48	12.11	20.80
SO2 (ppmv)	Bovar	721AT	90-721AT2-7642-1	45.40	15.13	25.30	45.40
THC (ppmv)	JUM	VE-7	089 3113457	84.90	25.10	45.20	84.90

Calibration Error	Analyzer Calibration Response Zero	Low	Mid	High	Absolute Difference Zero	Low	Mid	High	Difference (% of Span) Zero	Low	Mid	High
NOx (ppmv)	-0.07	24.77	45.27	85.19	0.07	0.13	0.27	0.49	0.08%	0.15%	0.32%	0.58%
CO (ppmv)	0.19	85.57	145.79	286.77	0.19	0.37	2.09	0.77	0.07%	0.13%	0.73%	0.27%
O2 (%)	0.06	4.52	12.14	21.08	0.06	0.04	0.14	0.18	0.29%	0.19%	0.67%	0.86%
CO2 (%)	-0.06	4.40	11.97	21.03	0.06	0.08	0.14	0.23	0.29%	0.38%	0.67%	1.11%
SO2 (ppmv)	-0.28	15.02	25.50	45.75	0.28	0.11	0.20	0.35	0.62%	0.24%	0.44%	0.77%
THC (ppmv)	-0.14	24.85	45.08	84.44	0.14	0.25	0.12	0.46	0.16%	0.29%	0.14%	0.54%

NOx Coverter Effieciency Check	
NO2 Run Results	44.2
NO2 Gas Certification	45.70
Coverter Efficiency:	**96.7%**

1603 Run C-1 Start: 14:45 End: 15:45

	Upscale Gas	Cal. Response Zero	Cal. Response Upscale	Initial Values Zero	Initial Values Upscale	Initial System Bias Zero	Initial System Bias Upscale	Final Values Zero	Final Values Upscale	Final System Bias Zero	Final System Bias Upscale	Drift Zero	Drift Upscale	Emission Calculation Raw Avg	Emission Calculation Corr. Avg	
NOx (ppmv)	84.70	-0.07	85.19	0.02	84.95	0.11%	-0.28%	0.19	85.01	0.31%	-0.21%	0.20%	0.07%	15.61	**15.47**	**NOx (ppmv)**
CO (ppmv)	85.20	0.19	85.57	-0.05	86.36	-0.08%	0.28%	0.25	86.47	0.02%	0.31%	0.35%	0.13%	211.75	**208.92**	**CO (ppmv)**
O2 (%)	12.00	0.06	12.14	0.04	12.04	-0.10%	-0.48%	-0.22	12.10	-1.34%	-0.19%	-2.17%	0.50%	1.96	**2.02**	**O2 (%)**
CO2 (%)	12.11	-0.06	11.97	-0.04	12.04	0.10%	0.34%	0.01	12.06	0.34%	0.43%	0.41%	0.17%	16.61	**16.69**	**CO2 (%)**
SO2 (ppmv)	15.13	-0.28	15.02	-0.12	15.17	0.35%	0.33%	0.12	15.36	0.88%	0.75%	1.59%	1.26%	3.88	**3.85**	**SO2 (ppmv)**
THC (ppmv)	84.90	-0.14	84.44	0.37	85.05	0.60%	0.72%	-0.07	85.86	0.08%	1.67%	-0.52%	0.95%	0.96	**0.96**	**THC (ppmv)**

1603 Run C-2 Start: 16:53 End: 17:53

	Upscale Gas	Cal. Response Zero	Cal. Response Upscale	Initial Values Zero	Initial Values Upscale	Initial System Bias Zero	Initial System Bias Upscale	Final Values Zero	Final Values Upscale	Final System Bias Zero	Final System Bias Upscale	Drift Zero	Drift Upscale	Emission Calculation Raw Avg	Emission Calculation Corr. Avg	
NOx (ppmv)	84.70	-0.07	85.19	0.19	85.01	0.31%	-0.21%	0.01	85.88	0.09%	0.81%	-0.21%	1.03%	12.84	**12.64**	**NOx (ppmv)**
CO (ppmv)	85.20	0.19	85.57	0.25	86.47	0.02%	0.31%	0.02	86.45	-0.06%	0.31%	-0.27%	-0.02%	217.71	**214.74**	**CO (ppmv)**
O2 (%)	12.00	0.06	12.14	-0.22	12.10	-1.34%	-0.19%	0.00	12.01	-0.29%	-0.62%	1.83%	-0.75%	1.82	**1.90**	**O2 (%)**
CO2 (%)	12.11	-0.06	11.97	0.01	12.06	0.34%	0.43%	0.04	12.03	0.48%	0.29%	0.25%	-0.25%	16.63	**16.73**	**CO2 (%)**
SO2 (ppmv)	15.13	-0.28	15.02	0.12	15.36	0.88%	0.75%	-0.43	14.39	-0.33%	-1.39%	-3.64%	-6.41%	1.00	**1.16**	**SO2 (ppmv)**
THC (ppmv)	84.90	-0.14	84.44	-0.07	85.86	0.08%	1.67%	-0.65	85.29	-0.60%	1.00%	-0.68%	-0.67%	0.39	**0.39**	**THC (ppmv)**

1603 Run C-3 Start: 18:44 End: 19:44

	Upscale Gas	Cal. Response Zero	Cal. Response Upscale	Initial Values Zero	Initial Values Upscale	Initial System Bias Zero	Initial System Bias Upscale	Final Values Zero	Final Values Upscale	Final System Bias Zero	Final System Bias Upscale	Drift Zero	Drift Upscale	Emission Calculation Raw Avg	Emission Calculation Corr. Avg	
NOx (ppmv)	84.70	-0.07	85.19	0.01	85.88	0.09%	0.81%	0.21	86.60	0.33%	1.66%	0.24%	0.85%	12.24	**11.93**	**NOx (ppmv)**
CO (ppmv)	85.20	0.19	85.57	0.02	86.45	-0.06%	0.31%	0.05	86.62	-0.05%	0.37%	0.04%	0.20%	214.99	**211.72**	**CO (ppmv)**
O2 (%)	12.00	0.06	12.14	0.00	12.01	-0.29%	-0.62%	0.00	11.98	-0.29%	-0.77%	0.00%	-0.25%	1.79	**1.79**	**O2 (%)**
CO2 (%)	12.11	-0.06	11.97	0.04	12.03	0.48%	0.29%	0.05	11.97	0.53%	0.00%	0.08%	-0.50%	16.68	**16.85**	**CO2 (%)**
SO2 (ppmv)	15.13	-0.28	15.02	-0.43	14.39	-0.33%	-1.39%	-0.57	14.98	-0.64%	-0.09%	-0.93%	3.90%	7.85	**8.32**	**SO2 (ppmv)**
THC (ppmv)	84.90	-0.14	84.44	-0.65	85.29	-0.60%	1.00%	0.00	85.26	0.16%	0.97%	0.77%	-0.04%	0.12	**0.12**	**THC (ppmv)**

APPENDIX C:
EXAMPLE CALCULATIONS

Example Calculations

(calculations shown for NOx measurements)

Analyzer Calibration Error (Equation 7E-1)

Refers to Test Run: 1603 Run C-1

ACE	=		analyzer calibration error, % of span
C_{DIR}	=	85.19	calibration gas concentration, direct, ppm or %
C_S	=	84.70	calibration span gas concentration, ppm or % (range)
C_{V*}	=	84.70	certified concentration of calibration gas, ppm or %

Eq. 7E-1

$$ACE = \frac{C_{DIR} - C_V}{C_S} * 100$$

$$= \frac{85.19 - 84.7}{84.7} * 100$$

ACE = 0.58%

Calculation of System Bias (Equation 7E-2)

Refers to Test Run: 1603 Run C-1

SB	=		system bias, % of calibration span
CS	=	84.70	calibration span, ppm or %
C_{DIR}	=	85.19	calibration analyzer response, direct, ppm or %
C_S	=	84.95	calibration analyzer response, system check, ppm or %

Eq. 7E-2

$$SB = \frac{C_S - C_{DIR}}{CS} * 100$$

$$= \frac{84.95 - 85.19}{84.7} * 100$$

SB = -0.28%

Calculation and Assessment of Drift (Equation 7E-4)

Refers to Test Run: 1603 Run C-1

D	=		drift assesement, % of calibration span
SB_i	=	-0.28%	pre-run system bias, % of calibration span
SB_f	=	-0.21%	post-run system bias, % of calibration span

Eq. 7E-4

$$D = |SB_f - SB_i|$$

$$= -0.00213 - -0.0028$$

D = 0.07%

Example Calculations

(calculations shown for NOx measurements)

Calculation of Effluent Gas Concentration, bias corrected (Equation 7E-5)

Refers to Test Run: 1603 Run C-1

C_{GAS}	=		average bias adjusted concentration, ppm or %
C_{AVG}	=	15.61	average unajusted concentration, ppm or %
C_O	=	0.11	average of initial and final zero bias checks
C_M	=	84.98	average of intial and final span bias checks
C_{MA}	=	84.70	actual concentration of upscale calibration gas

Eq. 7E-5

$$C_{GAS} = (C_{AVG} - C_O) * \frac{C_{MA}}{C_M - C_O}$$

$$= (15.61 - 0.105) * \frac{84.70}{84.98 - 0.11}$$

$$\mathbf{C_{GAS} = 15.47}$$

Calculation of NO_2 to NO Conversion Efficiency (Equation 7E-7)

Refers to Test Run: 1603 Run C-1

EFF_{NO2}	=		NO_2 to NO conversion efficiency, %
C_V	=	45.70	certified concentration of calibration gas, ppm NO_2
C_{DIR}	=	44.20	Analyzer Response, NO_2 ppm (measured)

Eq. 7E-7

$$EFF_{NO2} = \frac{C_{DIR}}{C_V} * 100$$

$$= \frac{44.2}{45.7} * 100$$

$$\mathbf{EFF_{NO2} = 96.7}$$

Stack Moisture and Molecular Weight

Example for Run: **1603 PM-1**

Observed Measurements:		**Constants/Conversions/Standards:**	
456.891	beginning DGM reading (ft3)	528	Tstd, EPA standard temperature (R)
493.295	ending DGM reading (ft3)	29.92	Pstd, EPA standard pressure (in. Hg)
2859.6	beginning impinger weight (g)	0.04715	water (ft3/g)
2942	ending impinger weight (g)	1.335	water (L/g)
0.9779	Y, DGM factor (unitless)	28.3	conversion factor, (L/ft3)
540.9	Tm, ave. DGM temperature (R = F + 460)	13.6	conversion factor, (in H2O/in Hg)
30.19	Pbar, barometric pressure (in. Hg)		
16.69	CO2 (%)		
2.02	O2 (%)		
1.06	dH, average		

Impinger Wt. Gain (IWG):

= ending impinger wt. (g) - beginning impinger wt. (g)

= 2942 - 2859.6

= 82.4 (g)

Volume Metered (Vm):

= ending DGM reading (ft3) - beginning DGM reading (ft3)

= 493.295 - 456.891

= 36.404 (ft3)

Standard Volume Metered (Vstd):

$$= \frac{(Vm)\ (Y)\ (Tstd)\ (P_{bar}+(dH/13.6)}{(Pstd)\ (Tm)}$$

$$= \frac{36.404 \times 0.9779 \times 528 \times 30.19 + \frac{1.06}{13.6}}{29.92 \times 540.9}$$

= 35.156 (SCF)

Moisture Content (Bws):

$$= \frac{IWG\ (g) \times 0.04715\ (ft3/g)}{(\ (IWG\ (g) \times 0.04715\ (ft3/g)\ ) + (\ Vstd\ (ft3)\ )\ )}$$

$$= \frac{3.8852}{(3.8852 + 35.156)}$$

= 0.100

= **10.0** **(%)**

Dry Gas Fraction:

= 1 - Bws

= 1 - 0.100

= 0.900

Molecular Wt. (Ms):

Compound	Total Percent	Molecular Weight	Moisture or Dry Fraction	Partial Mol. Wt.
H2O	n/a	18	0.100	1.791
O2	2.0	32	0.900	0.582
CO2	16.7	44	0.900	6.613
N2	81.3	28	0.900	20.496
				29.48 **(lb/lb-mole)**

Values may differ from Summary Tables due to rounding and truncation.

Stack Gas Flow Rate

Example for Run: **1603 PM-1**

Observed Measurements:		**Constants/Conversions/Standards:**	
0.84	Cps, pitot tube factor (unitless)	528	Tstd, EPA standard temperature (R)
30.19	Pb, barometric pressure (in. Hg)	29.92	Pstd, EPA standard pressure (in. Hg)
1014.8	Ts(abs), ave. stack temperature (R, F + 460)	85.49	Kp, (ft/s) [(lb/lb-mole) (in. Hg) / (R)(in.H2O)]^0.5
29.48	Ms, stack gas molecular wt. (lb/lb-mole)	5129.4	Kp, (ft/min) [(lb/lb-mole) (in. Hg) / (R)(in.H2O)]^0.5
0.30	Pg, stack static pressure (in. H2O)	60	conversion factor, (s/min)
43.6891	A, stack area (ft2)	60	conversion factor, (min/hr)
12	Number of traverse Points	0.07355	conversion factor, (in Hg/in H2O)
0.900	Fd, stack dry gas fraction		

Point#	dP	Point#	dP	Point#	dP
1	2.45	9	2.50	17	0.00
2	2.50	10	2.80	18	0.00
3	2.40	11	2.50	19	0.00
4	2.55	12	2.40	20	0.00
5	2.60	13	0.00	21	0.00
6	2.50	14	0.00	22	0.00
7	2.50	15	0.00	23	0.00
8	2.60	16	0.00	24	0.00

Absolute Stack Pressure (Ps):

= Pb x (Pg x 0.07355)

30.19 + (0.3 x 0.07355)

= 30.21 (in. Hg)

Average Square Root of ∑dP (p1):

$$= \frac{19.064}{12}$$

= 1.5887

Stack Velocity (Vs):
(ft/min)

= Kp x Cp x p1 x [Ts(abs) / (Ps x Ms)]^0.5

= 5129.4 x 0.84 x 1.5887 [1014.8 / (30.21 x 29.48)]^0.5

= 7306.3 (ft/min)

Stack Velocity (Vs):
(ft/sec)

= Vs / 60 (s/min)

= 7306.3 / 60

= 121.77 (ft/sec)

Stack Volumetric Flow (Qa):

= Vs x A

= 7306.3 x 43.6891

= 319206 (ACFM)

Stack Volumetric Flow (Qd):

= Qa x 60 (Tstd/Pstd) x (Ps/Ts(abs)) x Fd

$$= 319206 \times 60 \times \frac{528}{29.92} \times \frac{30.21}{1014.8} \times 0.900$$

= **9061343 DSCFH**

Values may differ from Summary Tables due to rounding and truncation.

Example Calculations

Emission Rates

***Example for* 1603 Run C-1**

Observed Measurements:		Constants/Conversions/Standards:	
9.06E+06	Qd, stack exhaust flow rate (DSCFH)	385.3	ideal gas constant @ EPA STP (scf / lb-mol)
15.47	C_{NOx}, corrected NOx concentration (ppm)	46.0055	Molecular weight of NOx as NO_2 (lb/lb-mol)
208.92	C_{CO}, corrected CO concentration (ppm)	28.0104	Molecular weight of SO_2 (lb/lb-mol)
3.85	C_{SO2}, corrected SO_2 concentration (ppm)	64.0588	Molecular weight of CO (lb/lb-mol)
0.96	C_{THC}, corrected THC concentration (ppm)	44.0962	Molecular weight of THC (lb/lb-mol)

NOx density factor (D_{NOx})

$$= \frac{46.01 \text{ lb/lb-mol}}{385.3 \text{ scf/lb-mol}} \times 10^{-6}$$

= 11.94E-08 lb/scf

NOx mass emission rate (lbs/hr)

= C_{NOx} x Qd x D_{NOx}

= 15.47 x 9.06E+06 x 1.19E-07

= **16.74 lbs/hr**

NOx mass emission rate (tons/yr)

= lbs/hr x hr/day x day/year / lbs/ton

= 16.74 x 24 x 365 / 2000

= **73.33 tons/yr**

CO density factor (D_{CO})

$$= \frac{28.01 \text{ lb/lb-mol}}{385.3 \text{ scf/lb-mol}} \times 10^{-6}$$

= 07.27E-08 lb/scf

CO mass emission rate (lbs/hr)

= C_{CO} x Qd x D_{CO}

= 208.92 x 9.06E+06 x 7.27E-08

= **137.62 lbs/hr**

CO mass emission rate (tons/yr)

= lbs/hr x hr/day x day/year / lbs/ton

= 137.62 x 24 x 365 / 2000

= **602.78 tons/yr**

SO_2 density factor (D_{SO2})

$$= \frac{64.06 \text{ lb/lb-mol}}{385.3 \text{ scf/lb-mol}} \times 10^{-6}$$

= 16.63E-08 lb/scf

SO_2 mass emission rate (lbs/hr)

= C_{SO2} x Qd x D_{SO2}

= 3.85 x 9.06E+06 x 1.66E-07

= **5.79 lbs/hr**

SO2 mass emission rate (tons/yr)

= lbs/hr x hr/day x day/year / lbs/ton

= 5.79 x 24 x 365 / 2000

= **25.38 tons/yr**

Values may differ from Summary Tables due to rounding and truncation.

Particulate Matter Emissions / Isokinetics

Example for Run: **1603 PM-1**

Observed Measurements:		**Constants/Conversions/Standards:**	
35.156	Vstd, gaseous volume collected (DSCF)	528	Tstd, EPA standard temperature (R)
9061343	Qd, stack volumetric flowrate (DSCFH)	29.92	Pstd, EPA standard pressure (in. Hg)
0.00102	PMtotal, total PM catch (g)	454	conversion factor, (g/lb)
0.000171	An, nozzle area (ft2)	7000	conversion factor, (grains/lb)
0.900	Fd, dry gas fraction (unitless)	2000	conversion factor, (lb/ton)
1.061	dH, average dH of DGM (in. H2O)	8760	conversion factor, (hr/year)
30.21	Ps, stack absolute pressure (in. Hg)		
1014.8	Ts, ave. stack temperature (R, F + 460)		
60	ts, sample time (min)		
7306.3	Vs, stack gas velocity (ft/min)		

Total PM Conc. in Stack: ***(lb/DSCF)***

= PMtotal / 454 / Vstd
= 0.0010 / 454 / 35.156
= **6.39E-08 (lb/DSCF)**

Note: Conc. in (lb/DSCF)

Total PM ***(lbs/hr)***

= Total PM Conc. in Stack x Stack Flow Rate (DSCFH)
= 6.39E-08 x 9061343
= **0.58 (lbs/hour)**

Ave. Sampling Isokinetics (%):

$$= \frac{(Ts \times Vstd \times Pstd \times 100)}{(Tstd \times Vs \times ts \times An \times Ps \times Fd)}$$

$$= \frac{1014.8 \times 35.156 \times 29.92 \times 100}{528 \times 7306.3 \times 60 \times 0.000171 \times 30.21 \times 0.900}$$

= **99.2 (%)**

Values may differ from Summary Tables due to rounding and truncation.

APPENDIX D:
FIELD AND LABORATORY DATA SHEET

Circular Stack Sampling Traverse Point Layout
(EPA Method 1)

Date:	5/7/07
Plant:	Chevron Pascagoula
Source:	F-1603 PM
Technician(s):	John Wood

Port + Stack ID (in):	102.50
Port Extension (in):	13.00
Stack ID (in):	89.50
Stack Area (ft2):	43.689
Duct Diameters **upstream** from flow disturbance (A):	5.36
Duct Diameters **downstream** from flow disturbance (B):	8.04
Total Required Traverse Points:	12
No. of Traverse Points per Diameter:	6

Stack Diagram

(Draw side view showing major components, dimensions, upstream/downstream flow disturbances)

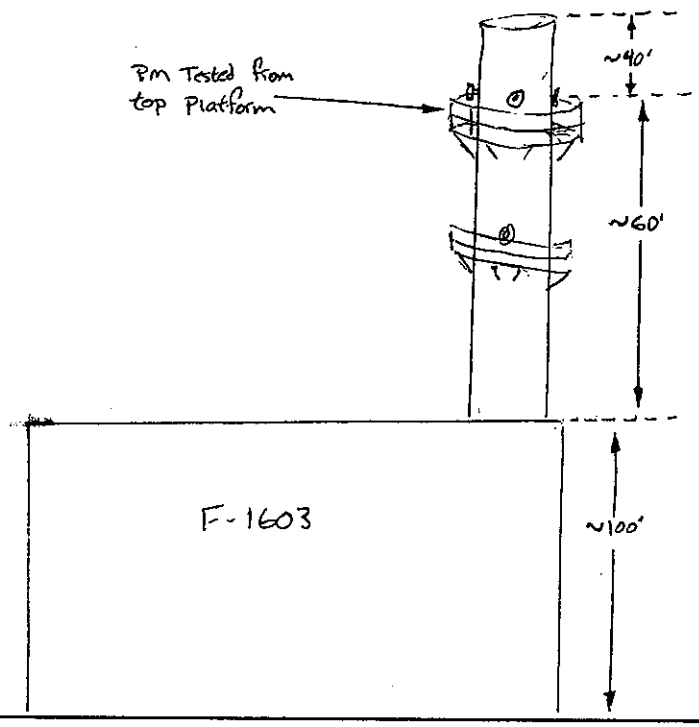

Stack cross section

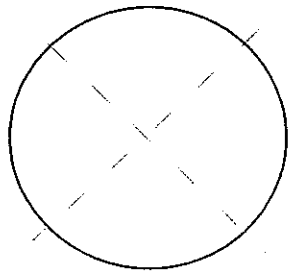

Draw traverse point layout above

Port Information and Location

(draw diagram w/ port diameter, type of fitting, port extension, etc.)

Ports are 150 lb Blind flange.

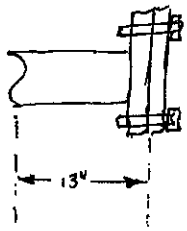

Traverse Point Number	Number of Traverse Points on a Diameter: 4	6	8	12	*Calculated Traverse Point	*Port Length Offset
	Percent distances (%)					
1	6.7	4.4	3.2	2.1	3.94	16.94
2	25.0	14.6	10.5	6.7	13.07	26.07
3	75.0	29.6	19.4	11.8	26.49	39.49
4	93.3	70.4	32.3	17.7	63.01	76.01
5		85.4	67.7	25.0	76.43	89.43
6		95.6	80.6	35.6	85.56	98.56
7			89.5	64.4		
8			96.8	75.0		
9				82.3		
10				88.2		
11				93.3		
12				97.9		

Stack diameters > 24 in shall have no traverse points located w/in 1 in of the stack wall

Stack diameters ≤ 24 in shall have no traverse points located w/in 0.5 in of the stack wall

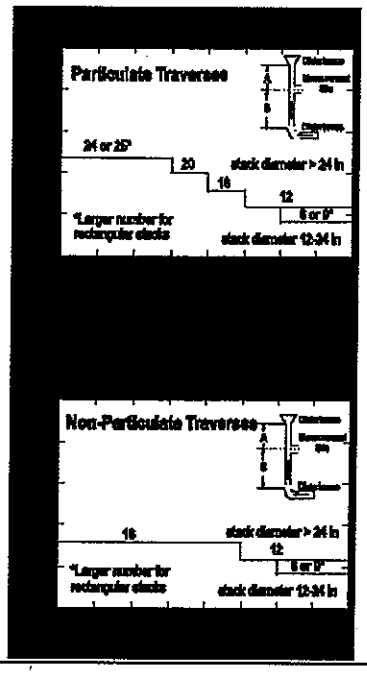

Testing by TRC Air Measurements, Austin, Texas

Gaseous Field Data Sheet

Unit: F-1603

Date: 5/7/2007
Project Manager: John Wood

Project Number: 150009
Project Name: Chevron Pascagoula
Location: Pascagoula, MS

TRC Analyzers Used

Pollutant	Make	Model	S/N
NOx	TECO	42C	42CHL-57056-311
CO	TECO	48	48-35087-249
O_2	Servomex	1400	014206-2804
CO_2	Servomex	1400	01415C-2821
SO_2	Bovar	721AT	90-721AT2-7642-1
THC	JUM	VE-7	089 3113457

Calibration Gases

Pollutant	Low Gas	Cylinder #	Mid Gas	Cylinder #	High Gas	Cylinder #
NOx	24.9	84911	45.0	80853	84.7	94575
CO	85.2	94575	143.7	18292	286	94412
O_2	4.48	85164	12.00	55731	20.9	128336
CO_2	4.48	128336	12.11	55731	20.8	85164
SO_2	15.13	128310	25.3	94848	45.4	133326
THC	25.1	84911	45.2	80853	84.9	94575

Initial Linearity

Pollutant	Zero	Low	Mid	High
NOx	-0.07	24.77	45.27	85.19
CO	0.19	85.57	145.79	286.77
O_2	0.06	4.52	12.14	21.08
CO_2	-0.06	4.4	11.97	21.03
SO_2	-0.28	15.02	25.5	45.75
THC	-0.14	24.85	45.1	84.44

Gas Concentration used for Sample System Bias

84.7
85.2
12.00
12.11
15.13
84.9

Nox Conv. Eff. Check

NO_2 Gas Cylinder #:	250107
NO_2 Gas Concentration:	45.70
Analyzer Response:	44.2
% Conversion:	96.7%

		Run #:	1603 Run C-1		Run #:	1603 Run C-2		Run #:	1603 Run C-3		
		Start Time:	14:45		Start Time:	16:53		Start Time:	18:44		
		End Time:	15:45		End Time:	17:53		End Time:	19:44		
Pollutant	**TTP Zero**	**TTP Span**	**Raw Results**	**TTP Zero**	**TTP Span**	**Raw Results**	**TTP Zero**	**TTP Span**	**Raw Results**	**TTP Zero**	**TTP Span**
NOx	0.02	84.95	15.61	0.19	85.01	12.84	0.01	85.88	12.24	0.21	86.60
CO	-0.05	86.36	211.75	0.25	86.47	217.71	0.02	86.45	214.99	0.05	86.62
O_2	0.04	12.04	1.96	-0.22	12.10	1.82	0.00	12.01	1.79	0.00	11.98
CO_2	-0.04	12.04	16.61	0.01	12.06	16.63	0.04	12.03	16.68	0.05	11.97
SO_2	-0.12	15.17	3.88	0.12	15.36	1.00	-0.43	14.39	7.85	-0.57	14.98
THC	0.37	85.05	0.96	-0.07	85.86	0.39	-0.65	85.29	0.12	0.00	85.26
		Atm. Press.:	30.19		Atm. Press.:	30.17		Atm. Press.:	30.14		
		Wet:	76		Wet:	76		Wet:	76		
		Dry:	61		Dry:	62		Dry:	62		

Pt. by Pt. Isokenetic Worksheet

Emission Point Designation: AA 051

Run #1	1603 PM-1
Date	5/7/2007
Box No.	JMW
Barometric Pressure (in. Hg)	30.19
DGM Factor	0.9779
K-factor	0.410
Pitot Tube Factor	0.84
Stack Static Pressure (in. H2O)	0.30
Molecular Wt. (lb/lb-mole)	29.48
Dry Gas Fraction	0.901
Nozzle #	0
Nozzle Area	0.00017087
Total Sample Time (min)	60
Number of Points	12
Time per Traverse Point	0:05:00

	DGM Ending Readings								
	Observed Reading	Target Reading	End Time	DGM Temp	ΔH	ΔP	Stack Temp	% ISO Point	% ISO Total
Traverse Point No.	456.891		14:42:00						
Point 1	459.740	459.885	14:47:00	78	1.02	2.45	554	95.2	95.2
Point 2	462.725	462.773	14:52:00	79	1.05	2.5	554	98.4	96.8
Point 3	465.710	465.695	14:57:00	79	1.01	2.4	555	100.5	98.0
Point 4	468.695	468.774	15:02:00	80	1.07	2.55	555	97.4	97.9
Point 5	471.740	471.792	15:07:00	80	1.09	2.6	553	98.3	98.0
Point 6	474.861	474.783	15:12:00	80	1.05	2.5	551	102.6	98.7
Point 7	477.870	477.899	15:19:00	81	1.05	2.5	556	99.0	98.8
Point 8	480.875	480.974	15:24:00	82	1.09	2.6	556	96.8	98.5
Point 9	483.924	483.924	15:29:00	83	1.05	2.5	556	100.0	98.7
Point 10	487.100	487.153	15:34:00	83	1.18	2.8	556	98.4	98.7
Point 11	490.210	490.156	15:39:00	84	1.06	2.5	557	101.8	98.9
Point 12	493.295	493.212	15:44:00	85	1.02	2.4	554	102.8	99.2
Averages/Totals				**80.9**	**1.1**	**2.5**	**554.8**	**99.3**	**99.24**

Testing performed by TRC Air Measurements; Austin, Texas.

Pt. by Pt. Isokenetic Worksheet

Emission Point Designation: AA 051

Run #2	1603 PM-2
Date	5/7/2007
Box No.	blue
Barometric Pressure (in. Hg)	30.17
DGM Factor	0.9779
K-factor	0.410
Pitot Tube Factor	0.84
Stack Static Pressure (in. H2O)	0.30
Molecular Wt. (lb/lb-mole)	29.48
Dry Gas Fraction	0.93
Nozzle #	0
Nozzle Area	0.00017087
Total Sample Time (min)	60
Number of Points	12
Time per Traverse Point	0:05:00

	DGM Ending Readings								
	Observed Reading	Target Reading	End Time	DGM Temp	ΔH	ΔP	Stack Temp	% ISO Point	% ISO Total
Traverse Point No.	497.649		16:52:00						
Point 1	500.803	500.750	16:57:00	83	1.10	2.60	564	101.7	101.7
Point 2	504.038	503.961	17:02:00	83	1.14	2.70	565	102.4	102.1
Point 3	507.092	507.136	17:07:00	83	1.10	2.60	566	98.6	100.9
Point 4	510.281	510.190	17:12:00	83	1.10	2.60	566	102.9	101.4
Point 5	513.210	513.292	17:17:00	84	1.03	2.45	566	97.3	100.6
Point 6	516.370	516.196	17:22:00	84	1.01	2.40	562	105.8	101.5
Point 7	519.230	519.317	17:31:00	84	0.99	2.35	567	97.0	100.8
Point 8	522.180	522.215	17:36:00	85	1.02	2.40	566	98.8	100.6
Point 9	525.350	525.171	17:41:00	86	1.02	2.40	566	106.0	101.2
Point 10	528.380	528.342	17:46:00	86	1.02	2.40	567	101.3	101.2
Point 11	531.540	531.563	17:51:00	88	1.15	2.70	568	99.3	101.0
Point 12	534.552	534.664	17:56:00	88	1.11	2.60	568	96.4	100.6
Average Values				84.5	1.1	2.5	565.9	100.6	100.63

Testing performed by TRC Air Measurements; Austin, Texas.

Pt. by Pt. Isokenetic Worksheet

Emission Point Designation: AA 051

Run #3	1603 PM-3
Date	05/07/07
Box No.	art
Barometric Pressure (in. Hg)	30.14
DGM Factor	0.9779
K-factor	0.410
Pitot Tube Factor	0.84
Stack Static Pressure (in. H2O)	0.30
Molecular Wt. (lb/lb-mole)	29.48
Dry Gas Fraction	0.9
Nozzle #	0
Nozzle Area	0.00017087
Total Sample Time (min)	60
Number of Points	12
Time per Traverse Point	0:05:00

	DGM Ending Readings								
	Observed Reading	Target Reading	End Time	DGM Temp	ΔH	ΔP	Stack Temp	% ISO Point	% ISO Total
Traverse Point No.	535.073		18:41:00						
Point 1	537.955	537.969	18:46:00	80	0.96	2.30	567	99.5	99.5
Point 2	540.740	540.843	18:51:00	80	0.96	2.30	573	96.4	98.0
Point 3	543.565	543.628	18:56:00	80	0.96	2.30	573	97.8	97.9
Point 4	546.515	546.663	19:01:00	80	1.11	2.65	573	95.2	97.2
Point 5	549.515	549.496	19:06:00	79	1.03	2.45	570	100.6	97.9
Point 6	552.505	552.467	19:11:00	79	1.01	2.40	569	101.3	98.5
Point 7	555.440	555.484	19:18:00	79	1.03	2.45	572	98.5	98.5
Point 8	558.340	558.324	19:23:00	79	0.96	2.30	574	100.6	98.7
Point 9	561.315	561.222	19:28:00	79	0.96	2.30	575	103.2	99.2
Point 10	564.430	564.376	19:33:00	79	1.09	2.60	575	101.8	99.5
Point 11	567.550	567.430	19:38:00	79	1.05	2.50	576	104.0	99.9
Point 12	570.580	570.505	19:43:00	79	1.00	2.40	565	102.5	100.1
Average values				**79.0**	**1.0**	**2.4**	**571.8**	**100.1**	**100.12**

Testing performed by TRC Air Measurements; Austin, Texas.

Data Analysis Technologies, Inc
7715 Corporate Blvd
Plain City, OH 43064

Data Summary Table
HCN by CTM-033

Client: **Atmospheric Analysis & Consulting, Inc.**
Client Project#: 070529
DAT Project#: 0507066
Analysis Date: 6/5/2007

Client ID:	Laboratory ID:	Sample Vol mLs	HCN Total ug	*MDL ug*	Q
F1603 - Run 1	0507066- 1	323	483	*15.5*	D
F1603 - Run 2	0507066- 2	310	1014	*37.2*	D
F1603 - Run 3	0507066- 3	293	682	*14.1*	D
Blank	0507066- 4	339	ND	*4.1*	

ND = Not detected at the detection limit shown.
MDL = Method Detection Limit
D = Value obtained from a dilution.
Sample volumes measured by the laboratory.

Data Analysis Technologies, Inc
7715 Corporate Blvd
Plain City, OH 43064

QC Summary Table
HCN by CTM-033

Client: Atmospheric Analysis & Consulting, Inc.
Client Project#: 070529
DAT Project#: 0507066
Analysis Date: 6/5/2007

Client ID:	Laboratory ID:	HCN Total ug	*MDL ug*	HCN ug/ml	*MDL ug/mL*	% Rec	% RPD	Q
2nd Source QC	ICV			0.47		94		
Initial Cal Blank	ICB			ND	*0.012*			
Matrix Spike	0507066-2 10x MS	2533	*37.2*			98		D
Matrix Spike Duplicate	0507066-2 10x MSD	2630	*37.2*			104	3.8	D
Lab Spike	0507066-LS			0.58		115		
2nd Source QC	CCV			0.47		94		
Continuing Cal Blank	CCB			ND	*0.012*			

ND = Not detected at the detection limit shown.
Lab Spike and 2nd Source QC concentration = 0.5 ug/mL
MS/MSD spike concentration = 1550 ug
D = Value obtained from a dilution.

070 524

Chain of Custody Record

TRC Project Information:

Job Name: Chevron Pascagoula
Location: Pascagoula, MS
Job Number: 150009
Profit Center:

Report To: John Wood
Lab Contact:
Telephone:

Bill To: TRC Solutions
9225 US Hwy 183S
Austin, TX 78747
P.O. No.:

Sample Identification	Sample Description	Date Collected	Container Type	Required Analyses	Special Instructions/Conditions	
F-1603 Run 1	0.1N NaOH	5/16/2007	HDPE Bottle	EPA Draft Method XHCN	analysis by IC	25761
F-1603 Run 2	0.1N NaOH	5/16/2007	HDPE Bottle	EPA Draft Method XHCN	analysis by IC	25762
F-1603 Run 3	0.1N NaOH	5/16/2007	HDPE Bottle	EPA Draft Method XHCN	analysis by IC	25763
Blank	0.1N NaOH	5/16/2007	HDPE Bottle	EPA Draft Method XHCN	analysis by IC	25764

Turn around Time Required:
Normal Rush Report By:

Relinquished by: John Wood Date: 5/22/07
Affiliation: TRC Project Manager

Received by: Date: 5/22/07 1025
Affiliation:

Hazard Identification:

Other Instructions:

Cubix Corporation
9225 U.S. Hwy. 183 South, Austin, Texas 78747
PHONE: 512.243.0202
FAX: 512.243.0222

ATMOSPHERIC ANALYSIS & CONSULTING, INC.
1534 Eastman Avenue, Suite A
Ventura, California 93003
Phone (805) 650-1642 Fax (805) 650-1644
E-mail: aaclab@earthlink.net

AAC Project No. 070529 Page 1 of 1

CHAIN OF CUSTODY / ANALYSIS REQUEST FORM

Client Name: TRC
Project name:
Project Mgr (Print Name): Marcus Hueppe
Project Number:
Sampler's Name (Print Name:
Sampler's Signature:

Analysis Requested: EPA Draft Method XHCN

Send Report:
Attn:
Phone #:
Fax #:

Send Invoice to:
Attn:
P.O. #

Turn Around Time
24-Hr ____ 48-Hr ____
5 day ____ Normal ____
Other (Specify)

Special Intructions / remarks:

AAC Sample No.	Date Sampled	Time Sampled	Sample Type	Client Sample ID/Description	Type/No. of containers	EPA Draft	Method XHCN
070529-25761	5/16/2007		Air	F1603 - Run 1	1	X	
070529-25762	5/16/2007		Air	F1603 - Run 2	1	X	
070529-25763	5/16/2007		Air	F1603 - Run 3	1	X	
070529-25764	5/16/2007		Air	Blank	1	X	

Relinquished by (Signature)	Print name:	Date/Time	Received by (Signature)	Print Name
[signature]	Thien Tran	5/24/2007 16:06		
Relinquished by (Signature)	Print name:	Date/Time 5/29/07 10:15	Received by (Signature) [signature]	Print Name DANIEL EWALD

Page 3 of 3

EPA Method Used: (Circle One)		
Method 9	Method 22	Other:

Run #	Page	Of
1-3	1	1

Company Name	Chevron Pascagoula Refinery
Facility Name	Pascagoula Refinery
Street Address	250 Industrial Road
City	Pascagoula
State	MS
Zip	39581

Process	Unit#	Operating Mode
FCCU	1603	Normal
Control Equipment		**Operating Mode**
Electrostatic Precipitator		Normal

Describe Emiss. Pt.
NONE VISIBLE

Height of Emiss. Pt. Start ~200' End ~200'	Hgt of Emiss. Pt. Rel. to Observer Start ~200' End ~200'
Distance to Emiss. Pt. Start ~1000' End ~1000'	Direction to Emiss. Pt. (Degrees) Start ~~13°~~ 120° End 120°

Vertical Angle to Obs. Pt. Start 13° End 13°	Direction to Obs. Pt. (Degrees) Start 120° End 120°
Distance and Direction to Observation Point from Emission Point Start SE	End SE

Describe Emissions Start NONE	End NONE
Emission Color Start NA End NA	Water Droplet Plume Attached Detached None

Describe Plume Background Start White and Blue Sky	End White + Blue Sky
Background Color Start Wht + Blu End Wht + Blu	Sky Conditions Start Partly End Partly
Wind Speed Start 3-5 mph End 3-5	Wind Direction Start S End S
Ambient Temp. Start 73° End 75°	Wet Bulb Temp. 62° / R.H. %

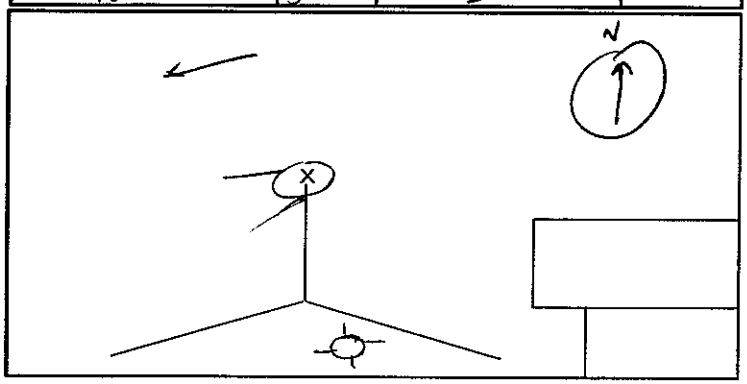

Observation Date	Time Zone	Start Time	~~Stop Time~~
5/7/07	CST	TIME	

Min/Sec	0	15	30	45	~~Min/Sec~~	~~0~~	~~15~~	~~30~~	~~45~~
1	0	0	0	0	~~1~~	1445			
2	0	0	0	0	~~2~~	1446			
3	0	0	0	0	33	1447			
4	0	0	0	0	34	1448			
5	0	0	0	0	35	1449			
6	0	0	0	0	36	1450			
7					37	~~1451~~			
8					38				
9					39				
10	0	0	0	0	40	1700			
11	0	0	0	0	41	1701			
12	0	0	0	0	42	1702			
13	0	0	0	0	43	1703			
14	0	0	0	0	44	1704			
15	0	0	0	0	45	1705			
16					46				
17					47				
18					48				
19					49				
20	0	0	0	0	50	1853			
21	0	0	0	0	51	1854			
22	0	0	0	0	52	1855			
23	0	0	0	0	53	1856			
24	0	0	0	0	54	1857			
25	0	0	0	0	55	1859			
26					56				
27					57				
28					58				
29					59				
30					60				

Comments/Additional Information

Observer's Name	John Wood
Observer's Signature	John Wood
Date	5/7/07
Organization	TRC
Certified By	ETA
Date	2/21/07

APPENDIX E:
OPERATIONAL DATA

Chevron Pascagoula
FCC Operational Data

Date/Time	16C0040 Coke Burn MLB/HR	16C0030 Corrected Total Air MMSCFH	16C0102 Corrected FCC Feed MBPD	16C060 Cat Circulation TONS/MIN	16FC225 Aqueous Ammonia Injection LBS/HR	16AC201A Stack Opacity %	16AI1006 K1603 (Regen Flue Gas) O2 Dry %	16AI201 Flue Gas O2 %
5/7/2007 14:45	46.612	8.637	88.694	56.961	57.704	0.336	1.818	1.540
5/7/2007 14:46	46.698	8.695	88.701	57.028	57.720	0.690	1.809	1.617
5/7/2007 14:47	46.420	8.637	88.553	57.066	57.696	0.342	1.773	1.606
5/7/2007 14:48	46.446	8.634	88.612	56.808	57.721	0.672	1.792	1.595
5/7/2007 14:49	46.367	8.658	88.657	56.955	57.749	0.460	1.840	1.678
5/7/2007 14:50	46.076	8.589	88.480	56.884	57.766	0.402	1.765	1.643
5/7/2007 14:51	46.486	8.646	88.551	56.734	57.830	0.047	1.732	1.604
5/7/2007 14:52	46.537	8.641	88.619	56.938	57.755	0.000	1.737	1.576
5/7/2007 14:53	46.475	8.635	88.830	56.901	57.748	0.384	1.694	1.593
5/7/2007 14:54	46.818	8.662	88.561	56.755	57.762	0.494	1.615	1.498
5/7/2007 14:55	46.781	8.669	88.474	57.217	57.704	1.350	1.695	1.546
5/7/2007 14:56	46.468	8.648	88.415	57.195	57.799	0.180	1.791	1.619
5/7/2007 14:57	46.209	8.643	88.581	56.841	57.728	0.189	1.888	1.705
5/7/2007 14:58	45.923	8.604	88.639	56.561	57.803	0.591	1.899	1.730
5/7/2007 14:59	46.271	8.624	88.601	56.528	57.740	1.780	1.834	1.640
5/7/2007 15:00	46.385	8.656	88.655	56.892	57.876	0.705	1.835	1.656
5/7/2007 15:01	46.459	8.662	88.662	56.257	60.311	0.069	1.815	1.646
5/7/2007 15:02	46.586	8.669	88.784	56.458	60.670	0.008	1.758	1.606
5/7/2007 15:03	46.658	8.682	88.851	56.525	60.690	0.001	1.783	1.610
5/7/2007 15:04	46.501	8.680	88.696	56.667	60.787	0.354	1.875	1.660
5/7/2007 15:05	46.501	8.713	88.531	56.715	60.728	0.143	1.928	1.731
5/7/2007 15:06	46.184	8.641	88.490	56.530	60.671	0.683	1.845	1.710
5/7/2007 15:07	45.941	8.554	88.694	56.413	60.670	0.576	1.757	1.628
5/7/2007 15:08	46.285	8.619	88.683	56.392	60.783	0.834	1.768	1.629
5/7/2007 15:09	46.158	8.612	88.680	56.555	60.766	0.324	1.813	1.663
5/7/2007 15:10	46.157	8.635	88.696	56.473	60.713	1.483	1.851	1.701
5/7/2007 15:11	46.382	8.648	88.649	56.157	60.694	0.205	1.815	1.650
5/7/2007 15:12	46.373	8.678	88.600	56.412	60.738	0.139	1.844	1.709
5/7/2007 15:13	46.214	8.615	88.645	56.484	60.578	0.633	1.764	1.636
5/7/2007 15:14	46.802	8.675	88.563	56.687	60.677	0.094	1.716	1.544
5/7/2007 15:15	46.726	8.654	88.586	57.330	60.687	0.933	1.708	1.532
5/7/2007 15:16	46.124	8.545	88.600	56.907	60.694	0.504	1.699	1.535
5/7/2007 15:17	46.446	8.611	88.706	56.944	60.702	0.056	1.723	1.549
5/7/2007 15:18	46.867	8.698	88.568	57.221	60.664	0.556	1.736	1.565
5/7/2007 15:19	46.894	8.710	88.754	57.223	60.684	0.984	1.763	1.581
5/7/2007 15:20	46.584	8.667	88.636	57.097	60.682	0.619	1.813	1.611
5/7/2007 15:21	46.459	8.640	88.574	56.801	60.709	0.181	1.777	1.605
5/7/2007 15:22	46.558	8.664	88.622	57.106	60.780	0.444	1.767	1.610
5/7/2007 15:23	46.510	8.650	88.648	56.729	60.704	1.224	1.737	1.601
5/7/2007 15:24	46.785	8.697	88.621	57.185	60.721	0.715	1.761	1.593
5/7/2007 15:25	46.382	8.648	88.712	57.241	60.718	0.369	1.797	1.641
5/7/2007 15:26	46.571	8.653	88.652	56.733	60.669	0.846	1.714	1.597
5/7/2007 15:27	46.742	8.685	88.590	56.701	60.691	0.815	1.794	1.587
5/7/2007 15:28	46.428	8.699	88.649	56.961	60.601	0.389	1.975	1.746
5/7/2007 15:29	46.554	8.685	88.653	56.684	60.535	0.858	2.001	1.661
5/7/2007 15:30	46.682	8.692	88.589	57.214	60.632	1.187	1.935	1.618
5/7/2007 15:31	46.493	8.651	88.705	57.110	60.717	1.699	1.788	1.616

Chevron Pascagoula
FCC Operational Data

Date/Time	16C0040 Coke Burn MLB/HR	16C0030 Corrected Total Air MMSCFH	16C0102 Corrected FCC Feed MBPD	16C060 Cat Circulation TONS/MIN	16FC225 Aqueous Ammonia Injection LBS/HR	16AC201A Stack Opacity %	16AI1006 K1603 (Regen Flue Gas) O2 Dry %	16AI201 Flue Gas O2 %
5/7/2007 15:32	46.263	8.634	88.644	56.906	60.604	0.231	1.810	1.653
5/7/2007 15:33	46.434	8.666	88.720	56.659	60.596	0.074	1.840	1.665
5/7/2007 15:34	46.076	8.627	88.510	56.545	60.612	0.027	1.870	1.721
5/7/2007 15:35	46.534	8.702	88.589	56.483	60.654	0.002	1.864	1.698
5/7/2007 15:36	46.571	8.756	88.636	56.737	60.617	1.970	1.993	1.799
5/7/2007 15:37	46.268	8.716	88.612	56.487	60.682	0.392	1.964	1.821
5/7/2007 15:38	46.255	8.667	88.627	56.339	60.654	0.462	1.900	1.735
5/7/2007 15:39	46.263	8.695	88.563	56.723	60.516	1.361	2.004	1.796
5/7/2007 15:40	46.292	8.730	88.614	56.592	60.583	0.230	2.075	1.850
5/7/2007 15:41	45.962	8.674	88.620	56.520	60.502	1.174	2.061	1.863
5/7/2007 15:42	45.901	8.651	88.618	56.327	60.535	1.281	2.049	1.832
5/7/2007 15:43	46.205	8.715	88.674	56.549	60.560	0.927	2.046	1.844
5/7/2007 15:44	46.318	8.716	88.621	56.401	60.673	0.640	2.025	1.804
5/7/2007 15:45	46.291	8.658	88.670	56.419	60.608	1.005	1.988	1.699
Run 1 Average	**46.420**	**8.659**	**88.630**	**56.752**	**59.894**	**0.595**	**1.833**	**1.656**
5/7/2007 16:52	46.470	8.661	88.557	56.796	59.599	0.944	1.846	1.689
5/7/2007 16:53	46.367	8.654	88.635	57.138	59.642	0.643	1.835	1.671
5/7/2007 16:54	46.681	8.717	88.661	57.298	59.552	2.336	1.803	1.675
5/7/2007 16:55	46.506	8.661	88.650	57.614	59.557	1.904	1.762	1.606
5/7/2007 16:56	46.955	8.695	88.694	57.818	59.564	0.700	1.838	1.646
5/7/2007 16:57	46.345	8.695	88.722	57.509	62.209	0.611	1.867	1.694
5/7/2007 16:58	46.718	8.709	88.697	57.262	62.597	0.888	1.784	1.615
5/7/2007 16:59	46.485	8.645	88.771	57.613	62.580	0.172	1.785	1.614
5/7/2007 17:00	46.700	8.674	88.628	57.645	62.633	0.007	1.743	1.577
5/7/2007 17:01	47.181	8.692	88.536	57.711	62.659	0.499	1.660	1.510
5/7/2007 17:02	46.766	8.654	88.678	57.844	62.636	0.074	1.692	1.535
5/7/2007 17:03	47.054	8.685	88.721	57.621	62.661	0.278	1.691	1.508
5/7/2007 17:04	46.832	8.750	88.669	58.029	62.695	0.759	1.719	1.553
5/7/2007 17:05	46.856	8.655	88.647	57.824	62.726	1.220	1.767	1.579
5/7/2007 17:06	46.804	8.650	88.635	57.498	62.691	0.500	1.754	1.591
5/7/2007 17:07	46.557	8.679	88.580	57.363	62.759	0.340	1.715	1.562
5/7/2007 17:08	46.123	8.640	88.518	57.460	62.794	0.495	1.765	1.614
5/7/2007 17:09	46.344	8.653	88.687	57.223	62.767	0.700	1.743	1.599
5/7/2007 17:10	46.732	8.684	88.649	57.350	62.649	0.319	1.744	1.559
5/7/2007 17:11	46.247	8.728	88.716	57.846	62.602	0.924	1.767	1.613
5/7/2007 17:12	46.481	8.678	88.545	57.662	62.606	0.137	1.742	1.596
5/7/2007 17:13	46.551	8.700	88.626	57.489	62.621	0.793	1.748	1.589
5/7/2007 17:14	46.478	8.684	88.662	57.327	62.629	1.803	1.790	1.629
5/7/2007 17:15	46.596	8.696	88.582	57.289	62.670	0.460	1.792	1.659
5/7/2007 17:16	46.356	8.639	88.672	57.220	59.004	0.248	1.787	1.640
5/7/2007 17:17	46.491	8.658	88.792	57.295	58.434	0.194	1.762	1.627
5/7/2007 17:18	46.066	8.580	88.799	57.192	58.468	1.421	1.790	1.625
5/7/2007 17:19	46.277	8.595	88.561	57.083	58.415	0.743	1.830	1.660
5/7/2007 17:20	46.285	8.589	88.638	56.876	58.374	1.236	1.783	1.629
5/7/2007 17:21	46.384	8.647	88.636	56.836	58.427	1.041	1.824	1.650
5/7/2007 17:22	45.910	8.619	88.584	56.995	58.486	0.846	1.850	1.670

Chevron Pascagoula
FCC Operational Data

Date/Time	16C0040 Coke Burn MLB/HR	16C0030 Corrected Total Air MMSCFH	16C0102 Corrected FCC Feed MBPD	16C060 Cat Circulation TONS/MIN	16FC225 Aqueous Ammonia Injection LBS/HR	16AC201A Stack Opacity %	16AI1006 K1603 (Regen Flue Gas) O2 Dry %	16AI201 Flue Gas O2 %
5/7/2007 17:23	45.990	8.609	88.536	56.810	58.340	0.744	1.908	1.700
5/7/2007 17:24	45.965	8.577	88.637	56.603	58.469	2.281	1.885	1.724
5/7/2007 17:25	46.166	8.593	88.578	56.607	58.427	1.550	1.828	1.699
5/7/2007 17:26	46.139	8.643	88.665	56.984	58.485	2.032	1.849	1.667
5/7/2007 17:27	45.764	8.617	88.733	57.318	58.404	0.638	1.870	1.724
5/7/2007 17:28	46.072	8.649	88.544	56.848	58.468	1.518	1.826	1.686
5/7/2007 17:29	45.957	8.621	88.628	57.202	58.555	2.392	1.749	1.664
5/7/2007 17:30	46.048	8.613	88.501	57.102	58.518	0.326	1.742	1.650
5/7/2007 17:31	46.412	8.596	88.593	56.955	58.534	0.237	1.772	1.573
5/7/2007 17:32	45.967	8.546	88.694	57.427	58.572	0.253	1.810	1.665
5/7/2007 17:33	46.376	8.563	88.649	56.658	58.592	2.133	1.660	1.555
5/7/2007 17:34	46.590	8.549	88.750	57.145	58.611	1.208	1.739	1.556
5/7/2007 17:35	45.961	8.544	88.727	56.952	58.671	1.053	1.798	1.615
5/7/2007 17:36	45.989	8.593	88.575	57.139	58.654	1.002	1.810	1.683
5/7/2007 17:37	45.864	8.537	88.602	57.042	58.692	1.250	1.703	1.618
5/7/2007 17:38	46.235	8.633	88.667	56.912	58.678	0.687	1.675	1.547
5/7/2007 17:39	46.217	8.597	88.571	57.330	58.671	0.690	1.685	1.551
5/7/2007 17:40	46.507	8.606	88.669	57.359	58.662	2.137	1.634	1.508
5/7/2007 17:41	46.135	8.596	88.635	57.765	58.757	0.636	1.580	1.489
5/7/2007 17:42	46.253	8.524	88.714	57.508	58.781	0.322	1.505	1.380
5/7/2007 17:43	46.108	8.481	88.665	57.642	58.881	1.152	1.620	1.475
5/7/2007 17:44	46.261	8.588	88.697	57.207	58.721	0.404	1.658	1.524
5/7/2007 17:45	46.487	8.591	88.614	57.409	58.781	1.910	1.678	1.481
5/7/2007 17:46	46.283	8.577	88.763	57.372	58.874	1.398	1.718	1.529
5/7/2007 17:47	46.333	8.596	88.881	57.311	58.879	0.983	1.689	1.562
5/7/2007 17:48	46.451	8.542	88.733	57.140	58.904	1.339	1.653	1.536
5/7/2007 17:49	46.355	8.517	88.602	57.320	58.909	1.031	1.686	1.515
5/7/2007 17:50	46.233	8.585	88.701	57.021	58.936	1.183	1.782	1.588
5/7/2007 17:51	46.099	8.581	88.625	57.018	59.007	0.942	1.765	1.609
5/7/2007 17:52	46.386	8.562	88.645	56.887	62.690	0.168	1.715	1.557
5/7/2007 17:53	46.364	8.600	88.616	57.124	63.348	1.413	1.740	1.612
5/7/2007 17:54	46.319	8.650	88.657	57.097	63.361	0.225	1.755	1.596
5/7/2007 17:55	46.427	8.576	88.704	57.272	63.386	0.723	1.778	1.617
5/7/2007 17:56	46.346	8.591	88.662	57.327	63.337	1.005	1.662	1.548
Run 2 Average	**46.364**	**8.623**	**88.652**	**57.270**	**60.235**	**0.926**	**1.752**	**1.600**
5/7/2007 18:41	46.627	8.692	88.671	57.443	58.697	0.769	1.681	1.555
5/7/2007 18:42	47.152	8.715	88.607	57.617	58.744	1.325	1.651	1.493
5/7/2007 18:43	47.130	8.725	88.652	57.950	58.620	0.992	1.693	1.528
5/7/2007 18:44	46.737	8.688	88.527	57.851	58.603	1.459	1.728	1.633
5/7/2007 18:45	46.380	8.628	88.615	57.465	58.714	1.026	1.755	1.652
5/7/2007 18:46	46.930	8.657	88.627	57.280	58.769	0.496	1.807	1.620
5/7/2007 18:47	46.413	8.701	88.656	57.433	62.619	0.338	1.791	1.626
5/7/2007 18:48	46.383	8.656	88.550	57.477	63.192	0.944	1.791	1.627
5/7/2007 18:49	46.557	8.609	88.554	57.315	63.142	1.538	1.733	1.601
5/7/2007 18:50	46.777	8.666	88.570	57.415	63.099	0.730	1.696	1.545
5/7/2007 18:51	46.731	8.674	88.565	57.739	63.178	1.310	1.756	1.593

Chevron Pascagoula
FCC Operational Data

Date/Time	16C0040 Coke Burn MLB/HR	16C0030 Corrected Total Air MMSCFH	16C0102 Corrected FCC Feed MBPD	16C060 Cat Circulation TONS/MIN	16FC225 Aqueous Ammonia Injection LBS/HR	16AC201A Stack Opacity %	16AI1006 K1603 (Regen Flue Gas) O2 Dry %	16AI201 Flue Gas O2 %
5/7/2007 18:52	46.678	8.690	88.618	57.595	63.141	0.583	1.775	1.617
5/7/2007 18:53	46.552	8.728	88.709	57.571	63.119	0.680	1.746	1.601
5/7/2007 18:54	47.073	8.633	88.703	57.670	63.141	1.042	1.674	1.547
5/7/2007 18:55	46.631	8.656	88.765	57.898	63.126	1.189	1.672	1.513
5/7/2007 18:56	46.813	8.692	88.641	57.773	63.198	0.164	1.730	1.560
5/7/2007 18:57	46.676	8.716	88.698	57.938	63.130	0.740	1.742	1.573
5/7/2007 18:58	46.823	8.685	88.570	57.791	63.069	1.425	1.761	1.587
5/7/2007 18:59	46.485	8.732	88.659	57.701	63.120	1.730	1.790	1.637
5/7/2007 19:00	46.632	8.649	88.663	57.263	63.135	0.468	1.795	1.638
5/7/2007 19:01	46.723	8.711	88.689	57.509	63.085	1.395	1.817	1.635
5/7/2007 19:02	46.156	8.616	88.673	57.418	63.006	0.186	1.828	1.666
5/7/2007 19:03	46.736	8.709	88.660	57.139	58.806	1.090	1.805	1.637
5/7/2007 19:04	46.401	8.672	88.628	57.551	58.166	1.121	1.783	1.625
5/7/2007 19:05	46.796	8.651	88.557	57.493	58.130	0.549	1.749	1.619
5/7/2007 19:06	47.140	8.651	88.513	57.601	58.097	0.595	1.716	1.571
5/7/2007 19:07	46.662	8.659	88.590	57.877	58.075	0.080	1.759	1.610
5/7/2007 19:08	47.027	8.715	88.574	57.558	58.114	0.756	1.687	1.535
5/7/2007 19:09	46.693	8.683	88.531	57.844	58.177	0.446	1.747	1.576
5/7/2007 19:10	46.806	8.676	88.677	57.416	58.193	0.942	1.776	1.586
5/7/2007 19:11	46.596	8.689	88.614	57.389	58.162	0.141	1.823	1.657
5/7/2007 19:12	46.308	8.667	88.718	57.219	58.172	1.086	1.792	1.631
5/7/2007 19:13	46.770	8.668	88.666	57.169	58.189	0.923	1.791	1.612
5/7/2007 19:14	46.690	8.662	88.656	57.418	58.174	1.266	1.778	1.571
5/7/2007 19:15	46.717	8.713	88.735	57.405	58.183	0.909	1.761	1.602
5/7/2007 19:16	46.704	8.695	88.668	57.633	58.102	0.885	1.751	1.566
5/7/2007 19:17	46.945	8.748	88.675	57.702	58.092	1.063	1.813	1.626
5/7/2007 19:18	46.945	8.690	88.708	57.513	58.059	0.971	1.789	1.627
5/7/2007 19:19	46.654	8.669	88.590	57.554	58.156	0.496	1.795	1.622
5/7/2007 19:20	46.810	8.696	88.565	57.389	58.227	0.805	1.739	1.582
5/7/2007 19:21	46.709	8.637	88.612	57.562	58.168	0.757	1.671	1.540
5/7/2007 19:22	47.050	8.729	88.607	57.616	58.149	0.912	1.649	1.509
5/7/2007 19:23	46.940	8.709	88.646	58.038	58.222	0.111	1.683	1.551
5/7/2007 19:24	46.915	8.688	88.611	57.474	58.155	0.705	1.646	1.511
5/7/2007 19:25	46.905	8.650	88.746	57.723	58.152	0.814	1.696	1.552
5/7/2007 19:26	46.838	8.682	88.661	57.391	58.193	0.111	1.672	1.547
5/7/2007 19:27	46.853	8.714	88.652	57.688	58.234	0.072	1.636	1.497
5/7/2007 19:28	46.877	8.649	88.619	57.875	58.291	0.011	1.745	1.569
5/7/2007 19:29	46.986	8.735	88.653	57.590	61.600	0.539	1.748	1.609
5/7/2007 19:30	46.906	8.710	88.723	57.606	62.090	0.791	1.758	1.570
5/7/2007 19:31	46.874	8.714	88.617	57.653	62.158	0.358	1.807	1.599
5/7/2007 19:32	46.602	8.689	88.582	57.640	62.109	0.762	1.858	1.696
5/7/2007 19:33	46.708	8.628	88.638	57.296	61.986	1.031	1.811	1.668
5/7/2007 19:34	46.806	8.697	88.556	57.093	62.069	0.937	1.816	1.633
5/7/2007 19:35	46.343	8.757	88.640	57.597	62.116	0.122	1.911	1.735
5/7/2007 19:36	46.853	8.759	88.544	57.436	62.086	0.740	1.820	1.677
5/7/2007 19:37	47.352	8.755	88.606	57.614	62.046	0.114	1.806	1.643
5/7/2007 19:38	46.623	8.676	88.594	58.001	62.051	0.433	1.767	1.632

Chevron Pascagoula
FCC Operational Data

Date/Time	16C0040 Coke Burn MLB/HR	16C0030 Corrected Total Air MMSCFH	16C0102 Corrected FCC Feed MBPD	16C060 Cat Circulation TONS/MIN	16FC225 Aqueous Ammonia Injection LBS/HR	16AC201A Stack Opacity %	16AI1006 K1603 (Regen Flue Gas) O2 Dry %	16AI201 Flue Gas O2 %
5/7/2007 19:39	46.818	8.714	88.615	57.680	62.048	0.943	1.768	1.614
5/7/2007 19:40	46.683	8.681	88.609	57.846	61.989	0.534	1.784	1.620
5/7/2007 19:41	46.616	8.667	88.673	57.477	62.090	0.496	1.803	1.641
5/7/2007 19:42	46.714	8.683	88.721	57.262	62.063	1.755	1.740	1.595
5/7/2007 19:43	46.891	8.673	88.640	57.517	62.008	0.252	1.763	1.614
5/7/2007 19:44	46.798	8.679	88.679	57.863	62.029	1.407	1.762	1.582
Run 3 Average	**46.752**	**8.686**	**88.634**	**57.571**	**60.422**	**0.771**	**1.756**	**1.598**

APPENDIX F:
TRC DATALOG FILES

TRC Data Log Files

Client	Source	Run #	Date	Time	NOx (ppm)	CO (ppm)	O2 (%)	CO2(%)	SO2 (ppm)	THC (ppm)
Chevron Pascagoula	F-1603		5/7/2007	1:20:33 PM	-0.07	0.24	0.06	-0.06	-0.18	24.86
Chevron Pascagoula	F-1603		5/7/2007	1:20:33 PM	-0.07	0.24	0.06	-0.06	-0.18	24.89
Chevron Pascagoula	F-1603	calibration	5/7/2007	1:21:03 PM	-0.07	0.24	0.06	-0.06	-0.43	24.83
Chevron Pascagoula	F-1603	calibration	5/7/2007	1:21:33 PM	-0.07	0.05	0.06	-0.06	-0.30	24.80
Chevron Pascagoula	F-1603		5/7/2007	1:22:03 PM	12.37	23.81	10.97	11.89	12.87	-20.23
Chevron Pascagoula	F-1603		5/7/2007	1:22:33 PM	44.48	76.86	12.13	11.94	42.68	-24.87
Chevron Pascagoula	F-1603		5/7/2007	1:23:03 PM	45.28	81.93	12.14	11.95	43.35	-24.87
Chevron Pascagoula	F-1603		5/7/2007	1:23:33 PM	45.47	81.83	12.14	11.96	43.41	-24.83
Chevron Pascagoula	F-1603		5/7/2007	1:24:03 PM	45.38	81.54	12.14	11.96	43.48	0.15
Chevron Pascagoula	F-1603		5/7/2007	1:24:33 PM	45.47	81.73	12.14	11.97	43.54	0.11
Chevron Pascagoula	F-1603		5/7/2007	1:25:03 PM	45.58	81.62	12.14	11.96	44.94	0.11
Chevron Pascagoula	F-1603		5/7/2007	1:25:33 PM	45.57	81.83	12.13	11.96	44.88	0.20
Chevron Pascagoula	F-1603		5/7/2007	1:26:03 PM	45.68	83.93	12.13	11.96	45.00	0.00
Chevron Pascagoula	F-1603		5/7/2007	1:26:33 PM	45.57	84.92	12.14	11.96	44.88	0.00
Chevron Pascagoula	F-1603		5/7/2007	1:27:03 PM	45.47	84.62	12.14	11.96	45.06	-0.01
Chevron Pascagoula	F-1603		5/7/2007	1:27:33 PM	45.57	84.73	12.14	11.97	45.24	0.00
Chevron Pascagoula	F-1603		5/7/2007	1:28:03 PM	45.57	84.81	12.14	11.97	45.18	-0.03
Chevron Pascagoula	F-1603		5/7/2007	1:28:33 PM	45.67	85.53	12.14	11.96	45.61	-0.09
Chevron Pascagoula	F-1603	calibration	5/7/2007	1:29:03 PM	45.17	85.72	12.14	11.96	46.04	-0.08
Chevron Pascagoula	F-1603	calibration	5/7/2007	1:29:33 PM	45.28	85.53	12.14	11.97	45.67	-0.16
Chevron Pascagoula	F-1603		5/7/2007	1:30:03 PM	25.34	71.44	12.15	12.75	45.73	96.93
Chevron Pascagoula	F-1603		5/7/2007	1:30:33 PM	25.03	45.73	21.06	4.41	21.59	101.37
Chevron Pascagoula	F-1603		5/7/2007	1:31:03 PM	25.04	45.44	21.06	4.40	24.51	101.42
Chevron Pascagoula	F-1603		5/7/2007	1:31:33 PM	24.94	45.33	21.07	4.39	25.12	102.06
Chevron Pascagoula	F-1603		5/7/2007	1:32:03 PM	25.04	45.33	21.07	4.40	25.55	84.79
Chevron Pascagoula	F-1603		5/7/2007	1:32:33 PM	25.03	45.43	21.08	4.41	25.30	83.88
Chevron Pascagoula	F-1603		5/7/2007	1:33:03 PM	25.03	45.24	21.07	4.40	25.43	85.07
Chevron Pascagoula	F-1603		5/7/2007	1:33:12 PM	25.13	45.33	21.07	4.40	25.61	84.99
Chevron Pascagoula	F-1603	calibration	5/7/2007	1:33:42 PM	25.04	45.43	21.08	4.40	25.37	84.73
Chevron Pascagoula	F-1603	calibration	5/7/2007	1:34:12 PM	25.03	45.33	21.08	4.40	25.55	84.23
Chevron Pascagoula	F-1603		5/7/2007	1:34:42 PM	24.95	42.65	5.28	23.05	13.84	46.22
Chevron Pascagoula	F-1603		5/7/2007	1:35:12 PM	86.05	26.42	4.57	23.08	15.12	42.16
Chevron Pascagoula	F-1603		5/7/2007	1:35:42 PM	86.55	25.41	4.55	21.58	14.76	41.99
Chevron Pascagoula	F-1603		5/7/2007	1:36:12 PM	86.25	25.32	4.55	21.58	15.24	41.82
Chevron Pascagoula	F-1603		5/7/2007	1:36:42 PM	86.35	25.32	4.54	21.56	15.06	41.87
Chevron Pascagoula	F-1603		5/7/2007	1:37:12 PM	86.45	25.32	4.54	21.58	14.94	41.76
Chevron Pascagoula	F-1603		5/7/2007	1:37:42 PM	86.56	25.32	4.54	21.58	14.94	41.67
Chevron Pascagoula	F-1603		5/7/2007	1:38:12 PM	85.38	25.33	4.54	21.57	15.24	41.71
Chevron Pascagoula	F-1603		5/7/2007	1:38:23 PM	85.25	25.32	4.53	21.58	14.88	41.64
Chevron Pascagoula	F-1603	calibration	5/7/2007	1:38:53 PM	85.06	25.32	4.53	20.88	15.00	41.58
Chevron Pascagoula	F-1603	calibration	5/7/2007	1:39:23 PM	85.26	25.22	4.51	20.89	15.00	45.00
Chevron Pascagoula	F-1603		5/7/2007	1:39:53 PM	85.26	25.22	4.48	19.65	15.18	44.96
Chevron Pascagoula	F-1603		5/7/2007	1:40:23 PM	73.80	33.38	20.81	0.06	2.62	44.81
Chevron Pascagoula	F-1603		5/7/2007	1:40:53 PM	24.95	83.33	20.80	0.03	1.10	44.62
Chevron Pascagoula	F-1603		5/7/2007	1:41:23 PM	24.84	85.82	20.78	0.01	0.67	44.62
Chevron Pascagoula	F-1603	calibration	5/7/2007	1:41:33 PM	24.85	85.72	20.78	0.02	0.73	44.63
Chevron Pascagoula	F-1603	calibration	5/7/2007	1:42:03 PM	24.74	85.53	20.78	0.01	0.67	45.05
Chevron Pascagoula	F-1603		5/7/2007	1:42:33 PM	24.73	85.62	20.77	0.00	0.55	45.34
Chevron Pascagoula	F-1603		5/7/2007	1:43:03 PM	24.74	85.72	20.78	0.00	0.61	45.31
Chevron Pascagoula	F-1603		5/7/2007	1:43:33 PM	3.91	44.85	20.76	0.01	0.73	4.14
Chevron Pascagoula	F-1603		5/7/2007	1:44:03 PM	0.12	5.22	20.74	0.01	0.43	0.78
Chevron Pascagoula	F-1603		5/7/2007	1:44:33 PM	0.02	0.85	20.75	0.00	0.18	0.80
Chevron Pascagoula	F-1603		5/7/2007	1:45:03 PM	0.01	0.85	20.75	0.00	0.43	0.96
Chevron Pascagoula	F-1603		5/7/2007	1:45:33 PM	0.02	0.85	20.75	0.00	0.49	0.72
Chevron Pascagoula	F-1603		5/7/2007	1:46:03 PM	0.01	0.85	20.74	0.00	0.37	0.71
Chevron Pascagoula	F-1603		5/7/2007	1:46:33 PM	-0.08	0.85	20.75	0.00	0.30	0.74
Chevron Pascagoula	F-1603		5/7/2007	1:47:03 PM	-0.08	0.85	20.75	0.00	0.49	0.69
Chevron Pascagoula	F-1603		5/7/2007	1:47:33 PM	-0.08	0.85	20.74	-0.01	0.55	0.76
Chevron Pascagoula	F-1603		5/7/2007	1:48:03 PM	-0.07	0.85	20.75	-0.01	0.30	0.92
Chevron Pascagoula	F-1603		5/7/2007	1:48:33 PM	-0.08	0.85	20.75	-0.01	0.37	0.81
Chevron Pascagoula	F-1603		5/7/2007	1:49:03 PM	-0.08	0.85	20.75	0.00	0.55	0.78
Chevron Pascagoula	F-1603		5/7/2007	1:49:33 PM	-0.08	0.85	20.75	0.00	0.43	0.97
Chevron Pascagoula	F-1603		5/7/2007	1:50:03 PM	-0.08	0.85	20.75	-0.01	0.55	0.70
Chevron Pascagoula	F-1603		5/7/2007	1:50:33 PM	-0.08	0.85	20.76	-0.02	0.55	0.52

TRC Data Log Files

Client	Source	Run #	Date	Time	NOx (ppm)	CO (ppm)	O2 (%)	CO2(%)	SO2 (ppm)	THC (ppm)
Chevron Pascagoula	F-1603		5/7/2007	1:51:03 PM	-0.07	0.85	20.77	-0.01	0.55	0.71
Chevron Pascagoula	F-1603		5/7/2007	1:51:33 PM	-0.07	0.85	20.77	-0.01	0.55	0.60
Chevron Pascagoula	F-1603		5/7/2007	1:52:03 PM	-0.08	0.85	20.74	-0.02	0.55	1.21
Chevron Pascagoula	F-1603		5/7/2007	1:52:33 PM	-0.08	0.74	20.77	-0.02	0.67	0.76
Chevron Pascagoula	F-1603		5/7/2007	1:53:03 PM	-0.08	0.85	20.77	-0.01	0.24	0.58
Chevron Pascagoula	F-1603		5/7/2007	1:53:33 PM	-0.08	0.85	20.78	-0.02	0.30	0.55
Chevron Pascagoula	F-1603		5/7/2007	1:54:03 PM	-0.07	0.85	20.77	-0.01	0.67	0.63
Chevron Pascagoula	F-1603		5/7/2007	1:54:33 PM	-0.08	0.85	20.78	-0.01	0.55	0.53
Chevron Pascagoula	F-1603		5/7/2007	1:55:03 PM	-0.06	0.74	20.77	-0.02	0.43	0.49
Chevron Pascagoula	F-1603		5/7/2007	1:55:33 PM	-0.07	0.85	20.78	-0.01	0.67	0.51
Chevron Pascagoula	F-1603		5/7/2007	1:56:03 PM	-0.08	0.74	20.77	-0.02	0.73	0.51
Chevron Pascagoula	F-1603		5/7/2007	1:56:33 PM	-0.08	0.85	20.78	-0.02	0.67	0.51
Chevron Pascagoula	F-1603		5/7/2007	1:57:03 PM	-0.08	0.85	20.78	-0.02	0.49	0.49
Chevron Pascagoula	F-1603		5/7/2007	1:57:33 PM	-0.08	0.85	20.78	-0.01	0.61	0.55
Chevron Pascagoula	F-1603		5/7/2007	1:58:03 PM	-0.08	0.85	20.78	-0.02	0.49	0.52
Chevron Pascagoula	F-1603		5/7/2007	1:58:33 PM	-0.07	0.74	20.77	-0.01	0.55	0.50
Chevron Pascagoula	F-1603		5/7/2007	1:59:03 PM	-0.07	0.85	20.78	-0.02	0.61	0.43
Chevron Pascagoula	F-1603		5/7/2007	1:59:33 PM	-0.07	0.74	20.78	-0.02	0.55	0.53
Chevron Pascagoula	F-1603		5/7/2007	2:00:03 PM	-0.07	0.85	20.78	-0.02	0.61	0.69
Chevron Pascagoula	F-1603		5/7/2007	2:00:33 PM	-0.07	0.74	20.78	-0.02	0.67	0.42
Chevron Pascagoula	F-1603		5/7/2007	2:01:03 PM	-0.07	0.85	20.78	-0.01	0.55	0.45
Chevron Pascagoula	F-1603		5/7/2007	2:01:33 PM	-0.08	0.85	20.78	-0.02	0.79	0.38
Chevron Pascagoula	F-1603		5/7/2007	2:02:03 PM	-0.08	0.85	20.78	-0.02	0.61	0.54
Chevron Pascagoula	F-1603		5/7/2007	2:02:33 PM	-0.08	0.85	20.78	-0.02	0.98	0.37
Chevron Pascagoula	F-1603		5/7/2007	2:03:03 PM	-0.07	0.85	20.78	-0.01	0.49	0.54
Chevron Pascagoula	F-1603		5/7/2007	2:03:33 PM	0.01	0.85	20.77	-0.02	0.55	0.72
Chevron Pascagoula	F-1603		5/7/2007	2:04:03 PM	-0.07	0.74	20.78	-0.02	0.61	0.34
Chevron Pascagoula	F-1603		5/7/2007	2:04:33 PM	-0.08	0.85	20.79	-0.02	0.61	0.58
Chevron Pascagoula	F-1603		5/7/2007	2:05:03 PM	-0.08	0.74	20.78	-0.02	0.43	0.42
Chevron Pascagoula	F-1603		5/7/2007	2:05:33 PM	-0.08	0.85	20.78	-0.03	0.43	0.37
Chevron Pascagoula	F-1603		5/7/2007	2:06:03 PM	-0.08	0.74	20.78	-0.02	0.43	0.31
Chevron Pascagoula	F-1603		5/7/2007	2:06:33 PM	-0.08	0.85	20.79	-0.01	0.85	0.32
Chevron Pascagoula	F-1603		5/7/2007	2:07:03 PM	-0.08	0.85	20.77	-0.02	0.73	0.41
Chevron Pascagoula	F-1603		5/7/2007	2:07:33 PM	0.01	0.95	20.74	-0.02	0.37	1.24
Chevron Pascagoula	F-1603		5/7/2007	2:08:03 PM	0.01	1.04	20.75	-0.01	0.67	2.36
Chevron Pascagoula	F-1603		5/7/2007	2:08:33 PM	0.02	1.84	20.75	-0.01	0.55	1.48
Chevron Pascagoula	F-1603		5/7/2007	2:09:03 PM	-0.08	0.95	20.73	-0.01	0.73	1.50
Chevron Pascagoula	F-1603		5/7/2007	2:09:33 PM	-0.08	0.85	20.72	0.00	0.67	1.40
Chevron Pascagoula	F-1603		5/7/2007	2:10:03 PM	-0.08	0.85	20.73	0.00	0.67	2.81
Chevron Pascagoula	F-1603		5/7/2007	2:10:33 PM	-0.08	0.85	20.72	0.00	0.79	1.86
Chevron Pascagoula	F-1603		5/7/2007	2:11:03 PM	-0.08	0.85	20.72	-0.01	0.85	1.88
Chevron Pascagoula	F-1603		5/7/2007	2:11:33 PM	-0.07	0.85	20.72	0.00	0.79	2.29
Chevron Pascagoula	F-1603		5/7/2007	2:12:03 PM	-0.07	0.74	20.72	0.02	0.91	2.46
Chevron Pascagoula	F-1603		5/7/2007	2:12:33 PM	1.61	3.54	19.06	3.66	0.61	-1.26
Chevron Pascagoula	F-1603		5/7/2007	2:13:03 PM	20.05	99.69	4.68	14.00	0.79	-2.73
Chevron Pascagoula	F-1603		5/7/2007	2:13:33 PM	21.55	99.69	2.85	15.21	0.91	-3.22
Chevron Pascagoula	F-1603		5/7/2007	2:14:03 PM	22.14	89.33	2.34	15.64	0.67	-3.63
Chevron Pascagoula	F-1603		5/7/2007	2:14:33 PM	22.35	105.21	2.17	15.81	0.67	-3.83
Chevron Pascagoula	F-1603		5/7/2007	2:15:03 PM	22.25	179.35	2.08	15.90	0.55	-3.99
Chevron Pascagoula	F-1603		5/7/2007	2:15:33 PM	22.25	181.95	2.05	15.90	0.49	-4.07
Chevron Pascagoula	F-1603		5/7/2007	2:16:03 PM	22.05	189.90	1.98	15.98	0.73	-4.13
Chevron Pascagoula	F-1603		5/7/2007	2:16:33 PM	21.34	187.95	1.96	15.98	0.55	-4.28
Chevron Pascagoula	F-1603		5/7/2007	2:17:03 PM	21.15	193.90	1.93	16.02	0.98	-4.24
Chevron Pascagoula	F-1603		5/7/2007	2:17:33 PM	21.55	180.95	1.91	16.00	0.98	-4.29
Chevron Pascagoula	F-1603		5/7/2007	2:18:03 PM	21.44	194.40	1.99	15.94	0.73	-4.29
Chevron Pascagoula	F-1603		5/7/2007	2:18:33 PM	21.26	112.50	1.94	16.17	0.73	-4.41
Chevron Pascagoula	F-1603		5/7/2007	2:19:03 PM	21.35	192.45	1.96	16.14	0.79	-4.44
Chevron Pascagoula	F-1603		5/7/2007	2:19:33 PM	21.55	278.50	2.02	16.10	0.73	-4.56
Chevron Pascagoula	F-1603		5/7/2007	2:20:03 PM	21.55	283.55	2.08	16.02	1.16	-4.57
Chevron Pascagoula	F-1603		5/7/2007	2:20:33 PM	21.26	285.00	2.03	16.06	1.10	-4.71
Chevron Pascagoula	F-1603		5/7/2007	2:21:03 PM	21.26	286.45	2.06	16.26	0.79	1.76
Chevron Pascagoula	F-1603	calibration	5/7/2007	2:21:13 PM	21.26	286.45	2.08	16.25	0.79	-1.39
Chevron Pascagoula	F-1603	calibration	5/7/2007	2:21:43 PM	21.25	286.95	2.14	16.15	0.79	-1.05
Chevron Pascagoula	F-1603		5/7/2007	2:22:13 PM	21.15	286.45	2.12	15.98	0.91	-3.35

TRC Data Log Files

Client	Source	Run #	Date	Time	NOx (ppm)	CO (ppm)	O2 (%)	CO2(%)	SO2 (ppm)	THC (ppm)
Chevron Pascagoula	F-1603		5/7/2007	2:22:43 PM	20.65	145.05	2.07	16.04	0.91	-3.28
Chevron Pascagoula	F-1603		5/7/2007	2:23:13 PM	20.26	118.10	2.05	16.03	0.91	-3.34
Chevron Pascagoula	F-1603		5/7/2007	2:23:41 PM	20.06	145.00	2.04	16.04	0.85	-3.35
Chevron Pascagoula	F-1603	calibration	5/7/2007	2:24:11 PM	20.25	146.05	2.04	16.05	0.79	-3.42
Chevron Pascagoula	F-1603	calibration	5/7/2007	2:24:41 PM	20.16	145.55	2.07	16.03	1.16	-3.50
Chevron Pascagoula	F-1603		5/7/2007	2:25:11 PM	20.26	145.55	2.09	16.00	1.16	-3.48
Chevron Pascagoula	F-1603		5/7/2007	2:25:41 PM	20.35	137.55	2.16	15.79	1.22	-3.49
Chevron Pascagoula	F-1603		5/7/2007	2:26:11 PM	20.26	176.85	2.13	15.18	1.28	11.16
Chevron Pascagoula	F-1603		5/7/2007	2:26:41 PM	16.27	102.00	4.95	11.22	1.28	40.28
Chevron Pascagoula	F-1603		5/7/2007	2:27:11 PM	35.81	86.00	2.35	2.52	1.04	40.90
Chevron Pascagoula	F-1603		5/7/2007	2:27:41 PM	42.08	44.60	0.83	0.68	1.28	41.26
Chevron Pascagoula	F-1603		5/7/2007	2:28:11 PM	43.58	35.05	0.48	0.19	1.04	59.61
Chevron Pascagoula	F-1603		5/7/2007	2:28:41 PM	44.38	43.05	0.21	0.05	1.10	64.86
Chevron Pascagoula	F-1603		5/7/2007	2:29:11 PM	44.85	45.20	0.11	0.01	0.91	70.09
Chevron Pascagoula	F-1603		5/7/2007	2:29:41 PM	44.88	45.55	0.06	0.00	1.10	70.11
Chevron Pascagoula	F-1603		5/7/2007	2:30:11 PM	44.77	45.55	0.06	0.00	1.22	138.36
Chevron Pascagoula	F-1603		5/7/2007	2:30:41 PM	44.97	45.05	0.05	-0.01	0.73	86.63
Chevron Pascagoula	F-1603		5/7/2007	2:31:11 PM	44.87	45.55	0.06	-0.02	0.98	42.66
Chevron Pascagoula	F-1603		5/7/2007	2:31:41 PM	44.78	45.05	0.05	-0.02	1.10	42.48
Chevron Pascagoula	F-1603		5/7/2007	2:32:11 PM	45.17	45.05	0.07	-0.03	0.79	83.05
Chevron Pascagoula	F-1603		5/7/2007	2:32:41 PM	81.17	62.15	0.05	-0.04	0.79	83.85
Chevron Pascagoula	F-1603		5/7/2007	2:33:11 PM	84.56	84.05	0.04	-0.03	0.79	83.27
Chevron Pascagoula	F-1603		5/7/2007	2:33:41 PM	84.76	86.50	0.04	-0.03	-0.12	85.02
Chevron Pascagoula	F-1603		5/7/2007	2:33:47 PM	84.96	86.00	0.04	-0.04	0.00	84.89
Chevron Pascagoula	F-1603	calibration ttp	5/7/2007	2:34:17 PM	84.96	86.50	0.04	-0.04	-0.18	85.10
Chevron Pascagoula	F-1603	calibration ttp	5/7/2007	2:34:47 PM	84.75	86.00	0.04	-0.04	-0.24	84.99
Chevron Pascagoula	F-1603		5/7/2007	2:35:17 PM	84.85	86.00	0.04	-0.04	-0.06	73.16
Chevron Pascagoula	F-1603		5/7/2007	2:35:47 PM	84.46	51.00	0.04	0.00	0.00	18.54
Chevron Pascagoula	F-1603		5/7/2007	2:36:17 PM	84.46	12.25	0.06	-0.02	-0.06	11.72
Chevron Pascagoula	F-1603		5/7/2007	2:36:47 PM	24.81	50.60	8.70	8.96	-0.37	-1.14
Chevron Pascagoula	F-1603		5/7/2007	2:37:17 PM	2.51	12.25	11.71	11.39	-0.18	-1.31
Chevron Pascagoula	F-1603		5/7/2007	2:37:47 PM	0.43	1.20	11.99	11.63	-0.24	-1.37
Chevron Pascagoula	F-1603		5/7/2007	2:38:17 PM	0.11	0.25	12.02	11.67	-0.06	-1.39
Chevron Pascagoula	F-1603		5/7/2007	2:38:47 PM	0.02	-0.25	12.03	12.02	-0.30	0.42
Chevron Pascagoula	F-1603		5/7/2007	2:39:01 PM	0.01	0.25	12.03	12.02	0.00	0.38
Chevron Pascagoula	F-1603	calibration ttp	5/7/2007	2:39:31 PM	0.02	-0.25	12.05	12.03	-0.06	0.36
Chevron Pascagoula	F-1603	calibration ttp	5/7/2007	2:40:01 PM	0.01	-0.25	12.04	12.04	-0.12	0.35
Chevron Pascagoula	F-1603		5/7/2007	2:40:31 PM	0.02	-0.25	12.04	11.78	5.79	0.83
Chevron Pascagoula	F-1603		5/7/2007	2:41:01 PM	0.02	0.25	3.99	3.45	13.84	-1.24
Chevron Pascagoula	F-1603		5/7/2007	2:41:31 PM	-0.08	0.25	0.31	0.26	14.27	-1.41
Chevron Pascagoula	F-1603		5/7/2007	2:42:01 PM	-0.08	0.75	0.09	0.02	14.94	-1.47
Chevron Pascagoula	F-1603	calibration ttp	5/7/2007	2:42:20 PM	0.02	0.75	0.07	0.00	15.00	0.02
Chevron Pascagoula	F-1603	calibration ttp	5/7/2007	2:42:50 PM	-0.07	0.75	0.06	-0.02	15.24	0.00
Chevron Pascagoula	F-1603		5/7/2007	2:43:20 PM	-0.08	0.75	0.05	-0.03	15.37	-0.02
Chevron Pascagoula	F-1603		5/7/2007	2:43:50 PM	-0.07	0.75	0.05	-0.01	9.63	1.06
Chevron Pascagoula	F-1603		5/7/2007	2:44:20 PM	13.87	10.20	1.33	13.51	0.00	2.25
Chevron Pascagoula	F-1603		5/7/2007	2:44:50 PM	19.45	167.40	1.80	16.24	0.37	1.67
Chevron Pascagoula	F-1603		5/7/2007	2:45:20 PM	19.76	214.70	1.86	16.62	0.98	1.43
Chevron Pascagoula	F-1603	Run C-1	5/7/2007	2:45:44 PM	19.95	199.90	1.92	16.62	1.10	1.30
Chevron Pascagoula	F-1603	Run C-1	5/7/2007	2:46:14 PM	19.76	197.90	1.92	16.64	1.46	1.22
Chevron Pascagoula	F-1603	Run C-1	5/7/2007	2:46:44 PM	19.56	205.40	1.88	16.69	1.52	1.20
Chevron Pascagoula	F-1603	Run C-1	5/7/2007	2:47:14 PM	19.55	197.90	1.87	16.70	1.77	1.11
Chevron Pascagoula	F-1603	Run C-1	5/7/2007	2:47:44 PM	19.56	199.90	1.85	16.73	1.95	1.05
Chevron Pascagoula	F-1603	Run C-1	5/7/2007	2:48:14 PM	18.86	197.90	1.86	16.70	2.26	1.06
Chevron Pascagoula	F-1603	Run C-1	5/7/2007	2:48:44 PM	18.75	202.85	1.94	16.63	2.74	1.01
Chevron Pascagoula	F-1603	Run C-1	5/7/2007	2:49:14 PM	18.36	206.85	1.97	16.58	2.80	1.01
Chevron Pascagoula	F-1603	Run C-1	5/7/2007	2:49:44 PM	18.16	208.85	1.93	16.61	2.62	0.97
Chevron Pascagoula	F-1603	Run C-1	5/7/2007	2:50:14 PM	17.95	221.25	1.92	16.62	3.11	0.96
Chevron Pascagoula	F-1603	Run C-1	5/7/2007	2:50:44 PM	18.06	215.20	1.88	16.67	3.11	0.94
Chevron Pascagoula	F-1603	Run C-1	5/7/2007	2:51:14 PM	17.96	219.75	1.86	16.71	3.29	0.95
Chevron Pascagoula	F-1603	Run C-1	5/7/2007	2:51:44 PM	17.76	206.85	1.84	16.73	3.66	0.95
Chevron Pascagoula	F-1603	Run C-1	5/7/2007	2:52:14 PM	17.86	213.25	1.83	16.74	3.66	0.96
Chevron Pascagoula	F-1603	Run C-1	5/7/2007	2:52:44 PM	17.97	194.85	1.82	16.74	3.78	0.92
Chevron Pascagoula	F-1603	Run C-1	5/7/2007	2:53:14 PM	17.96	191.95	1.87	16.70	3.90	0.94

TRC Data Log Files

Client	Source	Run #	Date	Time	NOx (ppm)	CO (ppm)	O2 (%)	CO2(%)	SO2 (ppm)	THC (ppm)
Chevron Pascagoula	F-1603	Run C-1	5/7/2007	2:53:44 PM	17.86	194.45	1.87	16.72	4.21	0.93
Chevron Pascagoula	F-1603	Run C-1	5/7/2007	2:54:14 PM	17.56	206.40	1.69	16.87	4.15	0.97
Chevron Pascagoula	F-1603	Run C-1	5/7/2007	2:54:44 PM	17.27	195.40	1.77	16.79	4.51	0.93
Chevron Pascagoula	F-1603	Run C-1	5/7/2007	2:55:14 PM	17.46	193.40	1.86	16.71	4.51	0.97
Chevron Pascagoula	F-1603	Run C-1	5/7/2007	2:55:44 PM	17.36	203.90	1.90	16.67	4.51	0.92
Chevron Pascagoula	F-1603	Run C-1	5/7/2007	2:56:14 PM	17.47	211.35	1.89	16.69	4.76	0.98
Chevron Pascagoula	F-1603	Run C-1	5/7/2007	2:56:44 PM	17.36	208.40	1.96	16.62	4.57	0.97
Chevron Pascagoula	F-1603	Run C-1	5/7/2007	2:57:14 PM	17.37	205.40	2.00	16.58	4.88	0.96
Chevron Pascagoula	F-1603	Run C-1	5/7/2007	2:57:44 PM	17.26	204.40	2.01	16.57	5.18	0.95
Chevron Pascagoula	F-1603	Run C-1	5/7/2007	2:58:14 PM	17.09	207.35	1.99	16.57	5.00	0.91
Chevron Pascagoula	F-1603	Run C-1	5/7/2007	2:58:44 PM	16.76	201.90	1.86	16.68	5.06	1.00
Chevron Pascagoula	F-1603	Run C-1	5/7/2007	2:59:14 PM	17.07	195.95	1.89	16.70	5.37	0.95
Chevron Pascagoula	F-1603	Run C-1	5/7/2007	2:59:44 PM	16.96	194.85	1.96	16.64	5.24	0.95
Chevron Pascagoula	F-1603	Run C-1	5/7/2007	3:00:14 PM	16.86	205.35	1.90	16.66	4.94	0.96
Chevron Pascagoula	F-1603	Run C-1	5/7/2007	3:00:44 PM	16.77	204.85	1.86	16.71	5.06	0.95
Chevron Pascagoula	F-1603	Run C-1	5/7/2007	3:01:14 PM	16.36	203.35	1.89	16.69	5.43	0.99
Chevron Pascagoula	F-1603	Run C-1	5/7/2007	3:01:44 PM	16.26	215.25	1.89	16.69	5.55	0.94
Chevron Pascagoula	F-1603	Run C-1	5/7/2007	3:02:14 PM	16.27	208.40	1.84	16.71	5.24	0.98
Chevron Pascagoula	F-1603	Run C-1	5/7/2007	3:02:44 PM	16.16	210.80	1.89	16.68	5.49	1.00
Chevron Pascagoula	F-1603	Run C-1	5/7/2007	3:03:14 PM	16.37	198.85	1.85	16.72	5.61	0.96
Chevron Pascagoula	F-1603	Run C-1	5/7/2007	3:03:44 PM	16.46	199.90	1.92	16.66	5.55	0.99
Chevron Pascagoula	F-1603	Run C-1	5/7/2007	3:04:14 PM	16.16	213.25	1.91	16.65	5.49	0.97
Chevron Pascagoula	F-1603	Run C-1	5/7/2007	3:04:44 PM	16.27	213.75	1.98	16.60	5.73	1.02
Chevron Pascagoula	F-1603	Run C-1	5/7/2007	3:05:14 PM	16.27	214.70	2.00	16.58	5.49	0.96
Chevron Pascagoula	F-1603	Run C-1	5/7/2007	3:05:44 PM	16.06	205.90	1.97	16.59	5.49	0.98
Chevron Pascagoula	F-1603	Run C-1	5/7/2007	3:06:14 PM	15.87	212.30	1.99	16.58	5.55	1.00
Chevron Pascagoula	F-1603	Run C-1	5/7/2007	3:06:44 PM	15.87	214.70	1.90	16.67	5.30	0.94
Chevron Pascagoula	F-1603	Run C-1	5/7/2007	3:07:14 PM	15.46	218.70	1.88	16.70	5.18	0.98
Chevron Pascagoula	F-1603	Run C-1	5/7/2007	3:07:44 PM	15.37	220.25	1.93	16.66	5.67	0.99
Chevron Pascagoula	F-1603	Run C-1	5/7/2007	3:08:14 PM	15.47	208.40	1.91	16.67	5.49	0.97
Chevron Pascagoula	F-1603	Run C-1	5/7/2007	3:08:44 PM	15.47	214.30	1.95	16.64	5.37	0.97
Chevron Pascagoula	F-1603	Run C-1	5/7/2007	3:09:14 PM	15.47	214.25	1.95	16.63	5.37	1.01
Chevron Pascagoula	F-1603	Run C-1	5/7/2007	3:09:44 PM	15.46	219.20	1.98	16.61	5.30	0.95
Chevron Pascagoula	F-1603	Run C-1	5/7/2007	3:10:14 PM	15.37	222.70	1.97	16.61	5.06	0.94
Chevron Pascagoula	F-1603	Run C-1	5/7/2007	3:10:44 PM	15.57	213.25	1.93	16.66	5.18	0.96
Chevron Pascagoula	F-1603	Run C-1	5/7/2007	3:11:14 PM	15.67	207.90	1.93	16.64	5.49	0.92
Chevron Pascagoula	F-1603	Run C-1	5/7/2007	3:11:44 PM	15.87	212.30	2.02	16.55	5.49	0.93
Chevron Pascagoula	F-1603	Run C-1	5/7/2007	3:12:14 PM	15.77	212.30	1.98	16.59	5.55	0.93
Chevron Pascagoula	F-1603	Run C-1	5/7/2007	3:12:44 PM	15.86	214.70	1.93	16.63	5.49	0.96
Chevron Pascagoula	F-1603	Run C-1	5/7/2007	3:13:14 PM	15.96	199.40	1.88	16.71	6.10	0.93
Chevron Pascagoula	F-1603	Run C-1	5/7/2007	3:13:44 PM	15.57	203.35	1.83	16.75	5.98	0.93
Chevron Pascagoula	F-1603	Run C-1	5/7/2007	3:14:14 PM	15.47	196.45	1.80	16.76	6.34	0.96
Chevron Pascagoula	F-1603	Run C-1	5/7/2007	3:14:44 PM	15.47	202.85	1.79	16.78	6.59	0.92
Chevron Pascagoula	F-1603	Run C-1	5/7/2007	3:15:14 PM	15.67	193.90	1.81	16.77	6.46	0.94
Chevron Pascagoula	F-1603	Run C-1	5/7/2007	3:15:44 PM	15.77	182.45	1.78	16.78	6.77	0.90
Chevron Pascagoula	F-1603	Run C-1	5/7/2007	3:16:14 PM	15.76	191.40	1.80	16.77	6.83	0.93
Chevron Pascagoula	F-1603	Run C-1	5/7/2007	3:16:44 PM	15.66	201.90	1.80	16.76	6.89	0.92
Chevron Pascagoula	F-1603	Run C-1	5/7/2007	3:17:14 PM	15.66	194.45	1.88	16.71	6.34	0.85
Chevron Pascagoula	F-1603	Run C-1	5/7/2007	3:17:44 PM	15.47	196.45	1.88	16.69	5.98	0.86
Chevron Pascagoula	F-1603	Run C-1	5/7/2007	3:18:14 PM	15.47	194.45	1.93	16.65	5.55	0.87
Chevron Pascagoula	F-1603	Run C-1	5/7/2007	3:18:44 PM	15.27	188.50	1.93	16.64	5.49	0.90
Chevron Pascagoula	F-1603	Run C-1	5/7/2007	3:19:14 PM	15.37	193.90	1.90	16.70	5.24	0.89
Chevron Pascagoula	F-1603	Run C-1	5/7/2007	3:19:44 PM	14.98	190.45	1.84	16.76	5.06	0.91
Chevron Pascagoula	F-1603	Run C-1	5/7/2007	3:20:14 PM	14.67	215.25	1.89	16.69	5.06	0.91
Chevron Pascagoula	F-1603	Run C-1	5/7/2007	3:20:44 PM	14.78	199.90	1.80	16.76	5.00	0.93
Chevron Pascagoula	F-1603	Run C-1	5/7/2007	3:21:14 PM	14.88	194.85	1.88	16.70	5.00	0.94
Chevron Pascagoula	F-1603	Run C-1	5/7/2007	3:21:44 PM	14.97	205.90	1.89	16.70	4.82	0.97
Chevron Pascagoula	F-1603	Run C-1	5/7/2007	3:22:14 PM	15.37	213.25	1.88	16.69	5.06	0.95
Chevron Pascagoula	F-1603	Run C-1	5/7/2007	3:22:44 PM	15.57	207.90	1.91	16.68	5.30	0.91
Chevron Pascagoula	F-1603	Run C-1	5/7/2007	3:23:14 PM	15.36	200.45	1.92	16.65	5.37	0.91
Chevron Pascagoula	F-1603	Run C-1	5/7/2007	3:23:44 PM	15.17	197.40	1.92	16.66	5.37	0.89
Chevron Pascagoula	F-1603	Run C-1	5/7/2007	3:24:14 PM	14.97	197.40	1.93	16.66	5.12	0.92
Chevron Pascagoula	F-1603	Run C-1	5/7/2007	3:24:44 PM	14.97	211.80	2.01	16.57	4.76	0.95
Chevron Pascagoula	F-1603	Run C-1	5/7/2007	3:25:14 PM	14.78	202.85	2.00	16.58	4.45	0.89

TRC Data Log Files

Client	Source	Run #	Date	Time	NOx (ppm)	CO (ppm)	O2 (%)	CO2(%)	SO2 (ppm)	THC (ppm)
Chevron Pascagoula	F-1603	Run C-1	5/7/2007	3:25:44 PM	14.88	196.90	1.91	16.68	4.21	0.93
Chevron Pascagoula	F-1603	Run C-1	5/7/2007	3:26:14 PM	14.67	192.90	1.98	16.61	4.15	0.92
Chevron Pascagoula	F-1603	Run C-1	5/7/2007	3:26:44 PM	14.28	228.70	1.99	16.57	4.21	0.92
Chevron Pascagoula	F-1603	Run C-1	5/7/2007	3:27:14 PM	13.98	217.75	1.96	16.60	4.21	0.92
Chevron Pascagoula	F-1603	Run C-1	5/7/2007	3:27:44 PM	14.08	201.40	2.08	16.49	3.84	0.93
Chevron Pascagoula	F-1603	Run C-1	5/7/2007	3:28:14 PM	13.97	206.40	2.27	16.31	3.41	0.89
Chevron Pascagoula	F-1603	Run C-1	5/7/2007	3:28:44 PM	13.68	217.75	2.10	16.47	3.17	0.90
Chevron Pascagoula	F-1603	Run C-1	5/7/2007	3:29:14 PM	13.77	208.40	2.04	16.54	2.87	0.90
Chevron Pascagoula	F-1603	Run C-1	5/7/2007	3:29:44 PM	13.78	221.25	2.02	16.56	2.62	0.94
Chevron Pascagoula	F-1603	Run C-1	5/7/2007	3:30:14 PM	13.97	211.80	1.93	16.68	2.50	0.94
Chevron Pascagoula	F-1603	Run C-1	5/7/2007	3:30:44 PM	14.28	192.90	1.89	16.69	2.32	1.00
Chevron Pascagoula	F-1603	Run C-1	5/7/2007	3:31:14 PM	14.47	199.95	1.93	16.63	1.95	1.00
Chevron Pascagoula	F-1603	Run C-1	5/7/2007	3:31:44 PM	14.48	205.90	2.02	16.55	1.77	1.02
Chevron Pascagoula	F-1603	Run C-1	5/7/2007	3:32:14 PM	14.37	205.40	1.92	16.64	1.77	0.97
Chevron Pascagoula	F-1603	Run C-1	5/7/2007	3:32:44 PM	13.88	209.35	1.95	16.58	2.01	0.96
Chevron Pascagoula	F-1603	Run C-1	5/7/2007	3:33:14 PM	13.88	225.25	1.99	16.57	2.07	0.97
Chevron Pascagoula	F-1603	Run C-1	5/7/2007	3:33:44 PM	13.97	221.75	2.05	16.52	1.95	0.98
Chevron Pascagoula	F-1603	Run C-1	5/7/2007	3:34:14 PM	13.98	220.30	2.02	16.55	1.95	1.02
Chevron Pascagoula	F-1603	Run C-1	5/7/2007	3:34:44 PM	14.18	221.25	2.05	16.51	1.95	1.00
Chevron Pascagoula	F-1603	Run C-1	5/7/2007	3:35:14 PM	14.17	214.30	2.01	16.56	2.13	0.99
Chevron Pascagoula	F-1603	Run C-1	5/7/2007	3:35:44 PM	13.98	219.25	2.09	16.49	2.20	1.00
Chevron Pascagoula	F-1603	Run C-1	5/7/2007	3:36:14 PM	14.08	230.20	2.19	16.37	2.20	0.97
Chevron Pascagoula	F-1603	Run C-1	5/7/2007	3:36:44 PM	14.07	237.20	2.23	16.34	1.65	0.96
Chevron Pascagoula	F-1603	Run C-1	5/7/2007	3:37:14 PM	13.78	239.70	2.15	16.40	1.71	1.04
Chevron Pascagoula	F-1603	Run C-1	5/7/2007	3:37:44 PM	13.78	230.65	2.09	16.46	1.65	0.93
Chevron Pascagoula	F-1603	Run C-1	5/7/2007	3:38:14 PM	13.77	220.75	2.12	16.43	1.46	0.94
Chevron Pascagoula	F-1603	Run C-1	5/7/2007	3:38:44 PM	13.78	222.25	2.18	16.42	1.46	0.94
Chevron Pascagoula	F-1603	Run C-1	5/7/2007	3:39:14 PM	13.67	238.65	2.27	16.31	1.46	0.98
Chevron Pascagoula	F-1603	Run C-1	5/7/2007	3:39:44 PM	13.47	246.30	2.26	16.31	1.10	0.95
Chevron Pascagoula	F-1603	Run C-1	5/7/2007	3:40:14 PM	13.37	253.75	2.35	16.25	1.10	0.92
Chevron Pascagoula	F-1603	Run C-1	5/7/2007	3:40:44 PM	13.38	248.30	2.31	16.27	1.10	0.97
Chevron Pascagoula	F-1603	Run C-1	5/7/2007	3:41:14 PM	13.57	252.75	2.33	16.25	0.91	0.99
Chevron Pascagoula	F-1603	Run C-1	5/7/2007	3:41:44 PM	13.77	250.70	2.23	16.34	1.34	1.02
Chevron Pascagoula	F-1603	Run C-1	5/7/2007	3:42:14 PM	13.58	247.25	2.15	16.41	0.79	0.98
Chevron Pascagoula	F-1603	Run C-1	5/7/2007	3:42:44 PM	13.47	245.80	2.17	16.40	0.79	1.02
Chevron Pascagoula	F-1603	Run C-1	5/7/2007	3:43:14 PM	13.38	254.30	2.14	16.40	0.79	1.01
Chevron Pascagoula	F-1603	Run C-1	5/7/2007	3:43:44 PM	13.27	258.25	2.11	16.44	0.55	1.04
Chevron Pascagoula	F-1603	Run C-1	5/7/2007	3:44:14 PM	13.38	245.30	2.06	16.50	0.73	1.08
Chevron Pascagoula	F-1603	Run C-1	5/7/2007	3:44:44 PM	13.67	234.20	2.02	16.53	0.73	1.05
Chevron Pascagoula	F-1603	Run C-1	5/7/2007	3:45:14 PM	13.40	230.25	1.97	16.58	0.79	1.05
Chevron Pascagoula	F-1603		5/7/2007	3:45:44 PM	13.47	249.75	2.01	16.53	0.85	1.06
Chevron Pascagoula	F-1603		5/7/2007	3:46:14 PM	13.68	252.60	2.04	16.52	0.73	1.01
Chevron Pascagoula	F-1603		5/7/2007	3:46:44 PM	13.88	243.15	2.00	16.54	0.73	0.99
Chevron Pascagoula	F-1603		5/7/2007	3:47:14 PM	14.08	240.65	2.07	16.49	0.98	0.99
Chevron Pascagoula	F-1603		5/7/2007	3:47:44 PM	13.88	236.65	2.04	16.51	0.61	1.00
Chevron Pascagoula	F-1603		5/7/2007	3:48:14 PM	13.68	236.25	2.03	16.52	0.98	0.98
Chevron Pascagoula	F-1603		5/7/2007	3:48:44 PM	13.57	228.70	2.01	16.53	0.98	0.96
Chevron Pascagoula	F-1603		5/7/2007	3:49:14 PM	13.57	233.20	2.05	16.50	0.91	1.01
Chevron Pascagoula	F-1603		5/7/2007	3:49:44 PM	13.57	227.20	2.07	16.50	1.04	0.96
Chevron Pascagoula	F-1603		5/7/2007	3:50:14 PM	13.57	221.25	2.01	16.55	1.10	0.97
Chevron Pascagoula	F-1603		5/7/2007	3:50:44 PM	13.58	213.80	2.04	16.53	1.10	0.94
Chevron Pascagoula	F-1603		5/7/2007	3:51:14 PM	13.77	214.75	1.96	16.60	0.85	0.96
Chevron Pascagoula	F-1603		5/7/2007	3:51:44 PM	13.67	211.80	1.95	16.63	0.85	0.98
Chevron Pascagoula	F-1603		5/7/2007	3:52:14 PM	13.67	218.30	1.98	16.57	0.73	1.01
Chevron Pascagoula	F-1603		5/7/2007	3:52:44 PM	13.67	221.65	2.02	16.54	0.98	0.99
Chevron Pascagoula	F-1603		5/7/2007	3:53:14 PM	13.88	227.75	2.04	16.52	0.85	0.97
Chevron Pascagoula	F-1603		5/7/2007	3:53:44 PM	13.67	232.25	2.04	16.50	0.98	0.98
Chevron Pascagoula	F-1603		5/7/2007	3:54:14 PM	13.88	235.20	2.11	16.44	0.73	0.97
Chevron Pascagoula	F-1603		5/7/2007	3:54:44 PM	13.77	237.70	2.07	16.48	0.79	0.96
Chevron Pascagoula	F-1603		5/7/2007	3:55:14 PM	13.77	234.20	2.08	16.48	0.85	1.04
Chevron Pascagoula	F-1603		5/7/2007	3:55:44 PM	13.57	234.25	2.04	16.52	0.73	1.63
Chevron Pascagoula	F-1603		5/7/2007	3:56:14 PM	13.38	234.20	2.04	16.53	0.61	3.41
Chevron Pascagoula	F-1603		5/7/2007	3:56:44 PM	13.10	235.20	1.99	16.57	0.61	3.35
Chevron Pascagoula	F-1603		5/7/2007	3:57:14 PM	13.18	230.70	1.92	16.62	0.73	3.13

TRC Data Log Files

Client	Source	Run #	Date	Time	NOx (ppm)	CO (ppm)	O2 (%)	CO2(%)	SO2 (ppm)	THC (ppm)
Chevron Pascagoula	F-1603		5/7/2007	3:57:44 PM	13.18	222.70	1.84	16.72	0.73	2.89
Chevron Pascagoula	F-1603		5/7/2007	3:58:14 PM	13.18	225.70	1.89	16.64	0.85	2.76
Chevron Pascagoula	F-1603		5/7/2007	3:58:44 PM	13.07	230.25	1.89	16.63	1.10	2.66
Chevron Pascagoula	F-1603		5/7/2007	3:59:14 PM	13.27	221.25	1.90	16.62	1.04	2.58
Chevron Pascagoula	F-1603		5/7/2007	3:59:44 PM	13.37	213.30	1.86	16.70	1.10	2.46
Chevron Pascagoula	F-1603		5/7/2007	4:00:14 PM	13.38	208.90	1.87	16.69	1.34	2.44
Chevron Pascagoula	F-1603		5/7/2007	4:00:44 PM	13.58	201.95	1.96	16.59	1.16	2.37
Chevron Pascagoula	F-1603		5/7/2007	4:01:14 PM	13.47	214.75	1.95	16.59	1.28	2.27
Chevron Pascagoula	F-1603		5/7/2007	4:01:44 PM	13.27	206.45	1.94	16.62	1.16	2.24
Chevron Pascagoula	F-1603		5/7/2007	4:02:14 PM	13.57	204.45	1.89	16.66	1.16	2.21
Chevron Pascagoula	F-1603		5/7/2007	4:02:44 PM	13.68	212.80	2.01	16.55	1.22	2.21
Chevron Pascagoula	F-1603		5/7/2007	4:03:14 PM	14.28	216.75	1.98	16.56	1.16	2.22
Chevron Pascagoula	F-1603		5/7/2007	4:03:44 PM	13.88	222.75	1.92	16.61	1.04	2.25
Chevron Pascagoula	F-1603		5/7/2007	4:04:14 PM	13.38	225.75	1.92	16.63	1.10	2.13
Chevron Pascagoula	F-1603		5/7/2007	4:04:44 PM	13.27	222.70	1.97	16.57	0.91	2.06
Chevron Pascagoula	F-1603		5/7/2007	4:05:14 PM	13.47	227.75	1.93	16.60	1.22	2.03
Chevron Pascagoula	F-1603		5/7/2007	4:05:44 PM	13.58	232.20	2.03	16.51	1.16	2.04
Chevron Pascagoula	F-1603		5/7/2007	4:06:14 PM	13.48	224.30	1.92	16.59	1.10	1.99
Chevron Pascagoula	F-1603		5/7/2007	4:06:44 PM	13.88	218.75	1.98	16.55	1.46	2.03
Chevron Pascagoula	F-1603		5/7/2007	4:07:14 PM	14.07	226.25	2.12	16.44	1.16	1.98
Chevron Pascagoula	F-1603		5/7/2007	4:07:44 PM	13.97	232.25	2.14	16.40	1.28	1.88
Chevron Pascagoula	F-1603		5/7/2007	4:08:14 PM	13.67	232.70	2.08	16.45	1.52	1.86
Chevron Pascagoula	F-1603		5/7/2007	4:08:44 PM	13.47	234.25	2.11	16.45	1.34	1.82
Chevron Pascagoula	F-1603		5/7/2007	4:09:14 PM	13.28	236.70	2.09	16.38	1.34	1.82
Chevron Pascagoula	F-1603		5/7/2007	4:09:44 PM	13.18	192.00	2.11	16.02	1.46	83.35
Chevron Pascagoula	F-1603		5/7/2007	4:10:14 PM	74.09	122.15	1.18	1.20	1.10	88.75
Chevron Pascagoula	F-1603		5/7/2007	4:10:44 PM	86.75	88.60	0.34	0.15	0.85	88.88
Chevron Pascagoula	F-1603		5/7/2007	4:11:14 PM	87.54	86.55	0.35	0.05	0.79	89.43
Chevron Pascagoula	F-1603		5/7/2007	4:11:44 PM	86.85	86.55	1.01	0.04	0.30	85.75
Chevron Pascagoula	F-1603		5/7/2007	4:12:14 PM	84.95	86.55	0.90	0.03	0.30	85.78
Chevron Pascagoula	F-1603		5/7/2007	4:12:16 PM	84.95	86.55	1.56	0.02	0.30	85.79
Chevron Pascagoula	F-1603	Calibration TTP	5/7/2007	4:12:46 PM	84.95	86.55	0.26	0.02	-0.06	85.80
Chevron Pascagoula	F-1603	Calibration TTP	5/7/2007	4:13:16 PM	84.95	86.55	0.01	0.01	0.06	85.86
Chevron Pascagoula	F-1603		5/7/2007	4:13:46 PM	84.65	81.65	-0.03	0.05	-0.18	36.25
Chevron Pascagoula	F-1603		5/7/2007	4:14:16 PM	83.96	22.65	-0.14	0.16	0.00	21.13
Chevron Pascagoula	F-1603		5/7/2007	4:14:46 PM	81.86	34.65	1.59	1.38	-0.12	2.97
Chevron Pascagoula	F-1603		5/7/2007	4:15:16 PM	7.33	28.15	12.06	11.17	-0.61	2.45
Chevron Pascagoula	F-1603		5/7/2007	4:15:46 PM	1.11	3.25	12.89	11.85	-0.55	2.36
Chevron Pascagoula	F-1603		5/7/2007	4:16:16 PM	0.31	0.30	12.20	12.07	0.06	2.30
Chevron Pascagoula	F-1603		5/7/2007	4:16:20 PM	0.31	0.30	12.17	12.07	0.24	2.31
Chevron Pascagoula	F-1603	Calibration TTP	5/7/2007	4:16:50 PM	0.22	0.30	12.11	11.96	0.24	2.32
Chevron Pascagoula	F-1603	Calibration TTP	5/7/2007	4:17:20 PM	0.12	-0.20	12.05	12.07	0.30	2.22
Chevron Pascagoula	F-1603		5/7/2007	4:17:50 PM	0.12	0.30	11.96	12.48	0.12	1.87
Chevron Pascagoula	F-1603		5/7/2007	4:18:20 PM	0.11	0.30	1.81	1.47	3.54	0.57
Chevron Pascagoula	F-1603		5/7/2007	4:18:45 PM	0.12	0.80	0.23	0.25	15.30	-0.03
Chevron Pascagoula	F-1603	Calibration TTP	5/7/2007	4:19:15 PM	0.11	0.80	0.04	0.06	15.18	-0.07
Chevron Pascagoula	F-1603	Calibration TTP	5/7/2007	4:19:45 PM	0.02	0.80	0.02	0.02	15.49	-0.09
Chevron Pascagoula	F-1603		5/7/2007	4:20:15 PM	0.01	0.80	0.01	0.00	15.18	-0.08
Chevron Pascagoula	F-1603		5/7/2007	4:20:45 PM	0.02	0.80	0.00	0.03	15.49	1.73
Chevron Pascagoula	F-1603		5/7/2007	4:21:15 PM	6.39	12.30	0.69	7.97	0.55	1.43
Chevron Pascagoula	F-1603		5/7/2007	4:21:45 PM	13.97	158.95	1.74	15.65	0.49	0.95
Chevron Pascagoula	F-1603		5/7/2007	4:22:15 PM	14.28	215.30	1.92	16.36	0.79	0.80
Chevron Pascagoula	F-1603		5/7/2007	4:22:45 PM	14.57	223.80	1.85	16.57	1.89	0.72
Chevron Pascagoula	F-1603		5/7/2007	4:23:15 PM	14.17	227.25	1.84	16.60	2.62	0.65
Chevron Pascagoula	F-1603		5/7/2007	4:23:45 PM	13.97	229.25	1.77	16.67	3.35	0.61
Chevron Pascagoula	F-1603		5/7/2007	4:24:15 PM	14.37	232.70	1.82	16.64	4.45	0.58
Chevron Pascagoula	F-1603		5/7/2007	4:24:45 PM	14.38	222.30	1.77	16.68	4.94	0.57
Chevron Pascagoula	F-1603		5/7/2007	4:25:15 PM	14.18	222.30	1.75	16.71	5.49	0.48
Chevron Pascagoula	F-1603		5/7/2007	4:25:45 PM	14.18	217.30	1.71	16.74	5.85	0.47
Chevron Pascagoula	F-1603		5/7/2007	4:26:15 PM	14.17	211.85	1.68	16.79	6.52	0.43
Chevron Pascagoula	F-1603		5/7/2007	4:26:45 PM	14.37	200.95	1.69	16.81	6.95	0.47
Chevron Pascagoula	F-1603		5/7/2007	4:27:15 PM	14.27	208.45	1.71	16.77	7.20	0.44
Chevron Pascagoula	F-1603		5/7/2007	4:27:45 PM	14.17	215.30	1.69	16.80	7.50	0.42
Chevron Pascagoula	F-1603		5/7/2007	4:28:15 PM	14.17	195.45	1.62	16.86	7.74	0.40

TRC Data Log Files

Client	Source	Run #	Date	Time	NOx (ppm)	CO (ppm)	O2 (%)	CO2(%)	SO2 (ppm)	THC (ppm)
Chevron Pascagoula	F-1603		5/7/2007	4:28:45 PM	14.27	192.50	1.69	16.79	7.68	0.40
Chevron Pascagoula	F-1603		5/7/2007	4:29:15 PM	13.98	194.50	1.68	16.81	8.05	0.40
Chevron Pascagoula	F-1603		5/7/2007	4:29:45 PM	13.78	194.50	1.71	16.76	7.99	0.41
Chevron Pascagoula	F-1603		5/7/2007	4:30:15 PM	13.77	209.90	1.79	16.68	8.29	0.41
Chevron Pascagoula	F-1603		5/7/2007	4:30:45 PM	13.80	212.75	1.84	16.63	8.17	0.40
Chevron Pascagoula	F-1603		5/7/2007	4:31:15 PM	13.68	209.90	1.89	16.56	8.05	0.44
Chevron Pascagoula	F-1603		5/7/2007	4:31:45 PM	13.57	212.80	1.92	16.55	7.99	0.48
Chevron Pascagoula	F-1603		5/7/2007	4:32:15 PM	13.47	210.45	1.88	16.60	7.32	0.42
Chevron Pascagoula	F-1603		5/7/2007	4:32:45 PM	13.28	208.45	1.84	16.62	6.89	0.40
Chevron Pascagoula	F-1603		5/7/2007	4:33:15 PM	13.38	202.45	1.82	16.63	6.89	0.43
Chevron Pascagoula	F-1603		5/7/2007	4:33:45 PM	13.47	204.90	1.81	16.67	6.83	0.47
Chevron Pascagoula	F-1603		5/7/2007	4:34:15 PM	13.57	212.35	1.78	16.69	6.71	0.46
Chevron Pascagoula	F-1603		5/7/2007	4:34:45 PM	13.48	223.80	1.81	16.66	6.40	0.43
Chevron Pascagoula	F-1603		5/7/2007	4:35:15 PM	13.38	227.80	1.72	16.76	6.46	0.39
Chevron Pascagoula	F-1603		5/7/2007	4:35:45 PM	13.27	212.80	1.76	16.75	6.10	0.43
Chevron Pascagoula	F-1603		5/7/2007	4:36:15 PM	12.97	212.35	1.86	16.63	5.79	0.42
Chevron Pascagoula	F-1603		5/7/2007	4:36:45 PM	12.88	228.75	1.91	16.57	5.37	0.41
Chevron Pascagoula	F-1603		5/7/2007	4:37:15 PM	12.68	221.30	1.90	16.59	5.37	0.38
Chevron Pascagoula	F-1603		5/7/2007	4:37:45 PM	12.77	209.95	1.89	16.60	4.88	0.36
Chevron Pascagoula	F-1603		5/7/2007	4:38:15 PM	12.78	209.90	1.99	16.52	4.21	0.38
Chevron Pascagoula	F-1603		5/7/2007	4:38:45 PM	12.78	213.35	1.97	16.52	4.09	0.37
Chevron Pascagoula	F-1603		5/7/2007	4:39:15 PM	12.77	209.40	1.97	16.51	3.60	0.32
Chevron Pascagoula	F-1603		5/7/2007	4:39:45 PM	12.78	212.35	1.93	16.53	3.11	0.32
Chevron Pascagoula	F-1603		5/7/2007	4:40:15 PM	12.68	218.75	1.96	16.51	3.11	0.37
Chevron Pascagoula	F-1603		5/7/2007	4:40:45 PM	12.77	216.35	1.97	16.51	2.68	0.36
Chevron Pascagoula	F-1603		5/7/2007	4:41:15 PM	12.68	214.80	2.02	16.46	2.68	0.40
Chevron Pascagoula	F-1603		5/7/2007	4:41:45 PM	12.88	219.80	2.05	16.44	2.32	0.36
Chevron Pascagoula	F-1603		5/7/2007	4:42:15 PM	12.47	217.80	2.02	16.47	2.07	0.36
Chevron Pascagoula	F-1603		5/7/2007	4:42:45 PM	12.48	221.80	2.07	16.42	2.07	0.38
Chevron Pascagoula	F-1603		5/7/2007	4:43:15 PM	12.48	230.70	2.09	16.41	1.59	0.39
Chevron Pascagoula	F-1603		5/7/2007	4:43:45 PM	12.37	222.75	2.00	16.47	1.34	0.33
Chevron Pascagoula	F-1603		5/7/2007	4:44:15 PM	12.58	219.30	2.03	16.46	1.22	0.32
Chevron Pascagoula	F-1603		5/7/2007	4:44:45 PM	12.78	222.75	2.08	16.42	1.46	0.32
Chevron Pascagoula	F-1603		5/7/2007	4:45:15 PM	12.67	227.80	2.09	16.40	1.28	0.33
Chevron Pascagoula	F-1603		5/7/2007	4:45:45 PM	12.68	223.80	2.10	16.42	0.98	0.36
Chevron Pascagoula	F-1603		5/7/2007	4:46:15 PM	12.58	226.30	2.08	16.41	0.91	0.32
Chevron Pascagoula	F-1603		5/7/2007	4:46:45 PM	12.68	218.75	2.03	16.46	0.79	0.29
Chevron Pascagoula	F-1603		5/7/2007	4:47:15 PM	12.87	219.25	2.10	16.43	0.85	0.32
Chevron Pascagoula	F-1603		5/7/2007	4:47:45 PM	12.87	224.30	2.05	16.45	0.37	0.35
Chevron Pascagoula	F-1603		5/7/2007	4:48:15 PM	12.78	229.25	1.99	16.53	0.37	0.35
Chevron Pascagoula	F-1603		5/7/2007	4:48:45 PM	12.48	228.75	1.99	16.51	0.55	0.35
Chevron Pascagoula	F-1603		5/7/2007	4:49:15 PM	12.67	230.25	2.04	16.47	0.24	0.33
Chevron Pascagoula	F-1603		5/7/2007	4:49:45 PM	12.87	225.80	2.01	16.48	0.61	0.33
Chevron Pascagoula	F-1603		5/7/2007	4:50:15 PM	12.98	230.25	2.07	16.42	0.18	0.34
Chevron Pascagoula	F-1603		5/7/2007	4:50:45 PM	12.88	233.25	2.10	16.41	0.30	0.34
Chevron Pascagoula	F-1603		5/7/2007	4:51:15 PM	12.67	233.25	2.13	16.37	0.55	0.33
Chevron Pascagoula	F-1603		5/7/2007	4:51:45 PM	12.68	235.75	2.09	16.40	0.67	0.34
Chevron Pascagoula	F-1603		5/7/2007	4:52:15 PM	12.68	235.75	2.09	16.44	0.43	0.38
Chevron Pascagoula	F-1603		5/7/2007	4:52:45 PM	12.48	233.75	2.06	16.47	0.37	0.33
Chevron Pascagoula	F-1603		5/7/2007	4:53:10 PM	12.37	228.30	2.10	16.44	0.06	0.38
Chevron Pascagoula	F-1603	Run C-2	5/7/2007	4:53:40 PM	12.67	225.30	2.09	16.45	0.24	0.34
Chevron Pascagoula	F-1603	Run C-2	5/7/2007	4:54:10 PM	12.68	229.75	2.09	16.45	0.37	0.36
Chevron Pascagoula	F-1603	Run C-2	5/7/2007	4:54:40 PM	12.67	229.25	2.08	16.46	0.18	0.38
Chevron Pascagoula	F-1603	Run C-2	5/7/2007	4:55:10 PM	12.18	228.75	1.99	16.53	0.24	0.32
Chevron Pascagoula	F-1603	Run C-2	5/7/2007	4:55:40 PM	12.28	228.75	2.04	16.50	-0.12	0.34
Chevron Pascagoula	F-1603	Run C-2	5/7/2007	4:56:10 PM	12.77	223.25	2.08	16.47	0.06	0.33
Chevron Pascagoula	F-1603	Run C-2	5/7/2007	4:56:40 PM	12.57	223.25	2.16	16.41	-0.18	0.32
Chevron Pascagoula	F-1603	Run C-2	5/7/2007	4:57:10 PM	12.48	235.75	2.09	16.45	0.00	0.32
Chevron Pascagoula	F-1603	Run C-2	5/7/2007	4:57:40 PM	12.37	234.25	2.05	16.51	-0.24	0.30
Chevron Pascagoula	F-1603	Run C-2	5/7/2007	4:58:10 PM	12.28	216.35	2.03	16.54	-0.43	0.31
Chevron Pascagoula	F-1603	Run C-2	5/7/2007	4:58:40 PM	12.48	212.80	2.03	16.54	-0.24	0.32
Chevron Pascagoula	F-1603	Run C-2	5/7/2007	4:59:10 PM	12.37	218.75	2.04	16.51	-0.30	0.26
Chevron Pascagoula	F-1603	Run C-2	5/7/2007	4:59:40 PM	12.47	217.80	1.97	16.59	0.00	0.30
Chevron Pascagoula	F-1603	Run C-2	5/7/2007	5:00:10 PM	12.38	212.80	1.99	16.58	-0.18	0.28

TRC Data Log Files

Client	Source	Run #	Date	Time	NOx (ppm)	CO (ppm)	O2 (%)	CO2(%)	SO2 (ppm)	THC (ppm)
Chevron Pascagoula	F-1603	Run C-2	5/7/2007	5:00:40 PM	12.37	207.95	1.86	16.69	0.00	0.25
Chevron Pascagoula	F-1603	Run C-2	5/7/2007	5:01:10 PM	12.48	200.50	1.94	16.64	-0.30	0.22
Chevron Pascagoula	F-1603	Run C-2	5/7/2007	5:01:40 PM	12.23	223.45	1.97	16.61	-0.18	0.23
Chevron Pascagoula	F-1603	Run C-2	5/7/2007	5:02:10 PM	12.28	214.80	1.97	16.59	0.00	0.23
Chevron Pascagoula	F-1603	Run C-2	5/7/2007	5:02:40 PM	12.27	217.80	1.93	16.64	0.00	0.23
Chevron Pascagoula	F-1603	Run C-2	5/7/2007	5:03:10 PM	12.28	207.95	1.91	16.63	0.06	0.27
Chevron Pascagoula	F-1603	Run C-2	5/7/2007	5:03:40 PM	12.57	214.80	1.93	16.63	0.00	0.22
Chevron Pascagoula	F-1603	Run C-2	5/7/2007	5:04:10 PM	12.38	219.85	1.96	16.60	-0.18	0.32
Chevron Pascagoula	F-1603	Run C-2	5/7/2007	5:04:40 PM	12.57	208.45	1.98	16.57	0.00	0.33
Chevron Pascagoula	F-1603	Run C-2	5/7/2007	5:05:10 PM	12.48	211.85	1.94	16.61	0.00	0.26
Chevron Pascagoula	F-1603	Run C-2	5/7/2007	5:05:40 PM	12.49	200.00	1.89	16.65	0.00	0.32
Chevron Pascagoula	F-1603	Run C-2	5/7/2007	5:06:10 PM	12.57	202.50	1.93	16.60	-0.06	0.39
Chevron Pascagoula	F-1603	Run C-2	5/7/2007	5:06:40 PM	12.78	203.45	1.90	16.65	-0.18	0.31
Chevron Pascagoula	F-1603	Run C-2	5/7/2007	5:07:10 PM	12.68	196.00	1.88	16.66	-0.06	0.29
Chevron Pascagoula	F-1603	Run C-2	5/7/2007	5:07:40 PM	12.37	204.95	1.95	16.61	-0.06	0.30
Chevron Pascagoula	F-1603	Run C-2	5/7/2007	5:08:10 PM	12.28	217.30	1.99	16.55	0.06	0.29
Chevron Pascagoula	F-1603	Run C-2	5/7/2007	5:08:40 PM	12.17	228.30	1.95	16.60	-0.18	0.29
Chevron Pascagoula	F-1603	Run C-2	5/7/2007	5:09:10 PM	12.58	227.25	1.95	16.58	-0.43	0.29
Chevron Pascagoula	F-1603	Run C-2	5/7/2007	5:09:40 PM	12.37	207.95	1.86	16.68	-0.55	0.32
Chevron Pascagoula	F-1603	Run C-2	5/7/2007	5:10:10 PM	12.47	212.40	1.93	16.62	-0.61	0.30
Chevron Pascagoula	F-1603	Run C-2	5/7/2007	5:10:40 PM	12.38	210.90	2.00	16.57	-0.55	0.35
Chevron Pascagoula	F-1603	Run C-2	5/7/2007	5:11:10 PM	12.27	206.90	1.99	16.54	-0.85	0.30
Chevron Pascagoula	F-1603	Run C-2	5/7/2007	5:11:40 PM	12.48	204.95	1.99	16.55	-0.85	0.32
Chevron Pascagoula	F-1603	Run C-2	5/7/2007	5:12:10 PM	12.37	200.50	1.96	16.57	-0.85	0.35
Chevron Pascagoula	F-1603	Run C-2	5/7/2007	5:12:40 PM	12.47	201.95	1.90	16.56	-0.73	0.41
Chevron Pascagoula	F-1603	Run C-2	5/7/2007	5:13:10 PM	12.68	204.50	1.90	16.55	-0.91	0.38
Chevron Pascagoula	F-1603	Run C-2	5/7/2007	5:13:40 PM	12.77	204.95	1.88	16.57	-0.73	0.44
Chevron Pascagoula	F-1603	Run C-2	5/7/2007	5:14:10 PM	12.38	206.45	1.90	16.52	-0.61	0.39
Chevron Pascagoula	F-1603	Run C-2	5/7/2007	5:14:40 PM	12.18	213.35	1.85	16.54	-0.73	0.37
Chevron Pascagoula	F-1603	Run C-2	5/7/2007	5:15:10 PM	12.37	221.80	1.89	16.53	-0.73	0.41
Chevron Pascagoula	F-1603	Run C-2	5/7/2007	5:15:40 PM	12.57	225.80	1.89	16.53	-1.04	0.39
Chevron Pascagoula	F-1603	Run C-2	5/7/2007	5:16:10 PM	12.48	220.80	1.85	16.56	-0.67	0.38
Chevron Pascagoula	F-1603	Run C-2	5/7/2007	5:16:40 PM	12.57	234.70	1.84	16.56	-0.91	0.43
Chevron Pascagoula	F-1603	Run C-2	5/7/2007	5:17:10 PM	12.77	220.35	1.85	16.55	-1.16	0.47
Chevron Pascagoula	F-1603	Run C-2	5/7/2007	5:17:40 PM	13.08	217.80	1.89	16.52	-1.34	0.42
Chevron Pascagoula	F-1603	Run C-2	5/7/2007	5:18:10 PM	12.77	220.35	1.84	16.57	-1.10	0.42
Chevron Pascagoula	F-1603	Run C-2	5/7/2007	5:18:40 PM	12.88	212.40	1.83	16.54	-1.10	0.42
Chevron Pascagoula	F-1603	Run C-2	5/7/2007	5:19:10 PM	13.17	215.30	1.89	16.51	-1.28	0.43
Chevron Pascagoula	F-1603	Run C-2	5/7/2007	5:19:40 PM	13.08	223.30	1.93	16.47	-1.16	0.42
Chevron Pascagoula	F-1603	Run C-2	5/7/2007	5:20:10 PM	12.77	237.25	1.81	16.58	-1.28	0.49
Chevron Pascagoula	F-1603	Run C-2	5/7/2007	5:20:40 PM	12.68	237.75	1.87	16.53	-1.16	0.45
Chevron Pascagoula	F-1603	Run C-2	5/7/2007	5:21:10 PM	12.77	229.75	1.81	16.56	-1.40	0.45
Chevron Pascagoula	F-1603	Run C-2	5/7/2007	5:21:40 PM	12.98	223.85	1.83	16.56	-1.04	0.45
Chevron Pascagoula	F-1603	Run C-2	5/7/2007	5:22:10 PM	12.87	230.30	1.84	16.55	-1.22	0.49
Chevron Pascagoula	F-1603	Run C-2	5/7/2007	5:22:40 PM	12.98	232.75	1.85	16.54	-1.40	0.46
Chevron Pascagoula	F-1603	Run C-2	5/7/2007	5:23:10 PM	12.87	233.25	1.87	16.54	-0.85	0.46
Chevron Pascagoula	F-1603	Run C-2	5/7/2007	5:23:40 PM	12.87	226.75	1.84	16.57	-1.10	0.46
Chevron Pascagoula	F-1603	Run C-2	5/7/2007	5:24:10 PM	12.78	231.80	1.92	16.45	-0.91	0.47
Chevron Pascagoula	F-1603	Run C-2	5/7/2007	5:24:40 PM	12.77	232.75	1.89	16.48	-1.04	0.44
Chevron Pascagoula	F-1603	Run C-2	5/7/2007	5:25:10 PM	12.78	237.25	1.88	16.49	-1.10	0.43
Chevron Pascagoula	F-1603	Run C-2	5/7/2007	5:25:40 PM	12.59	242.25	1.88	16.51	-1.22	0.41
Chevron Pascagoula	F-1603	Run C-2	5/7/2007	5:26:10 PM	12.67	239.20	1.83	16.60	-1.04	0.42
Chevron Pascagoula	F-1603	Run C-2	5/7/2007	5:26:40 PM	12.68	231.25	1.88	16.52	-1.22	0.47
Chevron Pascagoula	F-1603	Run C-2	5/7/2007	5:27:10 PM	12.67	240.70	1.91	16.49	-1.16	0.43
Chevron Pascagoula	F-1603	Run C-2	5/7/2007	5:27:40 PM	12.87	234.25	1.86	16.52	-1.10	0.43
Chevron Pascagoula	F-1603	Run C-2	5/7/2007	5:28:10 PM	12.58	234.25	1.84	16.55	-1.22	0.40
Chevron Pascagoula	F-1603	Run C-2	5/7/2007	5:28:40 PM	12.57	223.85	1.79	16.63	-1.16	0.49
Chevron Pascagoula	F-1603	Run C-2	5/7/2007	5:29:10 PM	12.67	223.80	1.84	16.58	-1.34	0.44
Chevron Pascagoula	F-1603	Run C-2	5/7/2007	5:29:40 PM	12.68	231.25	1.80	16.59	-1.59	0.42
Chevron Pascagoula	F-1603	Run C-2	5/7/2007	5:30:10 PM	12.57	242.65	1.80	16.60	-1.16	0.42
Chevron Pascagoula	F-1603	Run C-2	5/7/2007	5:30:40 PM	12.47	236.30	1.68	16.71	-1.28	0.40
Chevron Pascagoula	F-1603	Run C-2	5/7/2007	5:31:10 PM	12.68	235.20	1.72	16.68	-0.98	0.40
Chevron Pascagoula	F-1603	Run C-2	5/7/2007	5:31:40 PM	12.67	223.80	1.75	16.64	-1.34	0.43
Chevron Pascagoula	F-1603	Run C-2	5/7/2007	5:32:10 PM	12.68	228.75	1.82	16.58	-1.16	0.41

TRC Data Log Files

Client	Source	Run #	Date	Time	NOx (ppm)	CO (ppm)	O2 (%)	CO2(%)	SO2 (ppm)	THC (ppm)
Chevron Pascagoula	F-1603	Run C-2	5/7/2007	5:32:40 PM	12.67	227.80	1.76	16.66	-1.28	0.42
Chevron Pascagoula	F-1603	Run C-2	5/7/2007	5:33:10 PM	12.38	232.30	1.67	16.73	-0.91	0.41
Chevron Pascagoula	F-1603	Run C-2	5/7/2007	5:33:40 PM	12.67	219.30	1.69	16.71	-0.91	0.42
Chevron Pascagoula	F-1603	Run C-2	5/7/2007	5:34:10 PM	12.77	214.80	1.68	16.72	-0.85	0.38
Chevron Pascagoula	F-1603	Run C-2	5/7/2007	5:34:40 PM	12.98	217.80	1.74	16.65	-1.10	0.45
Chevron Pascagoula	F-1603	Run C-2	5/7/2007	5:35:10 PM	13.27	219.30	1.73	16.65	-1.10	0.41
Chevron Pascagoula	F-1603	Run C-2	5/7/2007	5:35:40 PM	13.48	223.80	1.79	16.58	-0.91	0.41
Chevron Pascagoula	F-1603	Run C-2	5/7/2007	5:36:10 PM	13.88	223.85	1.82	16.58	-0.55	0.44
Chevron Pascagoula	F-1603	Run C-2	5/7/2007	5:36:40 PM	13.97	231.25	1.71	16.66	-0.49	0.41
Chevron Pascagoula	F-1603	Run C-2	5/7/2007	5:37:10 PM	14.57	216.80	1.70	16.68	-0.12	0.44
Chevron Pascagoula	F-1603	Run C-2	5/7/2007	5:37:40 PM	14.78	212.40	1.68	16.71	0.18	0.35
Chevron Pascagoula	F-1603	Run C-2	5/7/2007	5:38:10 PM	14.38	211.85	1.63	16.75	0.98	0.35
Chevron Pascagoula	F-1603	Run C-2	5/7/2007	5:38:40 PM	14.97	206.50	1.66	16.76	1.46	0.35
Chevron Pascagoula	F-1603	Run C-2	5/7/2007	5:39:10 PM	14.28	211.85	1.64	16.80	1.83	0.30
Chevron Pascagoula	F-1603	Run C-2	5/7/2007	5:39:40 PM	13.88	220.80	1.62	16.81	2.38	0.25
Chevron Pascagoula	F-1603	Run C-2	5/7/2007	5:40:10 PM	13.58	203.45	1.60	16.82	3.05	0.31
Chevron Pascagoula	F-1603	Run C-2	5/7/2007	5:40:40 PM	13.47	200.95	1.59	16.82	3.48	0.30
Chevron Pascagoula	F-1603	Run C-2	5/7/2007	5:41:10 PM	13.78	192.00	1.58	16.85	4.15	0.29
Chevron Pascagoula	F-1603	Run C-2	5/7/2007	5:41:40 PM	13.47	192.55	1.54	16.89	4.57	0.26
Chevron Pascagoula	F-1603	Run C-2	5/7/2007	5:42:10 PM	13.58	187.50	1.46	16.96	5.43	0.26
Chevron Pascagoula	F-1603	Run C-2	5/7/2007	5:42:40 PM	13.67	196.95	1.53	16.90	5.37	0.31
Chevron Pascagoula	F-1603	Run C-2	5/7/2007	5:43:10 PM	13.77	192.55	1.60	16.84	5.91	0.25
Chevron Pascagoula	F-1603	Run C-2	5/7/2007	5:43:40 PM	13.68	196.00	1.68	16.75	6.28	0.25
Chevron Pascagoula	F-1603	Run C-2	5/7/2007	5:44:10 PM	13.18	239.75	1.61	16.80	6.46	0.25
Chevron Pascagoula	F-1603	Run C-2	5/7/2007	5:44:40 PM	13.37	215.85	1.55	16.87	6.71	0.24
Chevron Pascagoula	F-1603	Run C-2	5/7/2007	5:45:10 PM	13.37	190.50	1.57	16.88	6.89	0.26
Chevron Pascagoula	F-1603	Run C-2	5/7/2007	5:45:40 PM	13.08	204.00	1.55	16.88	7.01	0.30
Chevron Pascagoula	F-1603	Run C-2	5/7/2007	5:46:10 PM	12.97	228.75	1.63	16.80	7.38	0.31
Chevron Pascagoula	F-1603	Run C-2	5/7/2007	5:46:40 PM	13.07	227.80	1.65	16.77	7.20	0.24
Chevron Pascagoula	F-1603	Run C-2	5/7/2007	5:47:10 PM	13.18	209.95	1.67	16.76	7.26	0.26
Chevron Pascagoula	F-1603	Run C-2	5/7/2007	5:47:40 PM	12.87	200.95	1.62	16.81	7.50	0.27
Chevron Pascagoula	F-1603	Run C-2	5/7/2007	5:48:10 PM	13.07	194.00	1.64	16.78	7.38	0.25
Chevron Pascagoula	F-1603	Run C-2	5/7/2007	5:48:40 PM	13.08	213.85	1.62	16.80	7.50	0.26
Chevron Pascagoula	F-1603	Run C-2	5/7/2007	5:49:10 PM	12.98	218.35	1.59	16.85	7.68	0.27
Chevron Pascagoula	F-1603	Run C-2	5/7/2007	5:49:40 PM	13.07	198.95	1.67	16.75	7.07	0.77
Chevron Pascagoula	F-1603	Run C-2	5/7/2007	5:50:10 PM	12.98	199.45	1.69	16.73	7.32	1.09
Chevron Pascagoula	F-1603	Run C-2	5/7/2007	5:50:40 PM	12.98	204.00	1.72	16.70	7.44	1.07
Chevron Pascagoula	F-1603	Run C-2	5/7/2007	5:51:10 PM	12.67	214.80	1.69	16.74	7.32	0.99
Chevron Pascagoula	F-1603	Run C-2	5/7/2007	5:51:40 PM	12.78	213.85	1.64	16.81	7.20	0.91
Chevron Pascagoula	F-1603	Run C-2	5/7/2007	5:52:10 PM	12.58	204.00	1.63	16.80	7.50	0.82
Chevron Pascagoula	F-1603	Run C-2	5/7/2007	5:52:40 PM	12.57	213.35	1.69	16.69	7.68	0.82
Chevron Pascagoula	F-1603	Run C-2	5/7/2007	5:53:10 PM	12.47	234.25	1.71	16.69	7.62	0.70
Chevron Pascagoula	F-1603		5/7/2007	5:53:40 PM	12.48	228.30	1.73	16.68	7.20	0.64
Chevron Pascagoula	F-1603		5/7/2007	5:54:10 PM	12.48	227.80	1.69	16.74	7.56	0.59
Chevron Pascagoula	F-1603		5/7/2007	5:54:40 PM	12.58	214.80	1.71	16.71	7.62	0.60
Chevron Pascagoula	F-1603		5/7/2007	5:55:10 PM	12.47	213.85	1.71	16.70	7.13	0.53
Chevron Pascagoula	F-1603		5/7/2007	5:55:40 PM	12.47	221.30	1.63	16.78	7.32	0.48
Chevron Pascagoula	F-1603		5/7/2007	5:56:10 PM	12.48	209.95	1.64	16.79	7.32	0.46
Chevron Pascagoula	F-1603		5/7/2007	5:56:40 PM	12.48	210.90	1.63	16.81	7.62	0.44
Chevron Pascagoula	F-1603		5/7/2007	5:57:10 PM	12.37	225.80	1.55	16.89	7.62	0.45
Chevron Pascagoula	F-1603		5/7/2007	5:57:40 PM	12.67	220.35	1.64	16.80	7.93	0.45
Chevron Pascagoula	F-1603		5/7/2007	5:58:10 PM	12.67	200.00	1.60	16.84	7.56	0.46
Chevron Pascagoula	F-1603		5/7/2007	5:58:40 PM	12.18	211.40	1.55	16.87	7.80	0.46
Chevron Pascagoula	F-1603		5/7/2007	5:59:10 PM	12.37	213.85	1.58	16.84	8.17	0.40
Chevron Pascagoula	F-1603		5/7/2007	5:59:40 PM	12.37	204.95	1.57	16.78	8.17	0.40
Chevron Pascagoula	F-1603		5/7/2007	6:00:10 PM	12.38	154.55	1.52	16.74	8.29	20.42
Chevron Pascagoula	F-1603		5/7/2007	6:00:40 PM	70.40	146.10	0.63	1.49	5.91	86.47
Chevron Pascagoula	F-1603		5/7/2007	6:01:10 PM	85.26	94.55	0.04	0.17	3.41	86.63
Chevron Pascagoula	F-1603		5/7/2007	6:01:40 PM	85.74	86.60	0.01	0.07	2.93	84.97
Chevron Pascagoula	F-1603		5/7/2007	6:01:58 PM	85.85	86.10	0.01	0.05	1.59	85.37
Chevron Pascagoula	F-1603	Calibration TTP	5/7/2007	6:02:28 PM	85.85	86.60	0.00	0.04	1.16	85.22
Chevron Pascagoula	F-1603	Calibration TTP	5/7/2007	6:02:58 PM	85.95	86.60	0.00	0.03	0.61	85.22
Chevron Pascagoula	F-1603		5/7/2007	6:03:28 PM	85.75	83.65	0.00	0.04	0.18	78.39
Chevron Pascagoula	F-1603		5/7/2007	6:03:58 PM	24.34	65.70	8.06	9.26	-0.49	1.42

TRC Data Log Files

Client	Source	Run #	Date	Time	NOx (ppm)	CO (ppm)	O2 (%)	CO2(%)	SO2 (ppm)	THC (ppm)
Chevron Pascagoula	F-1603		5/7/2007	6:04:28 PM	2.12	11.25	11.03	11.72	-0.73	1.14
Chevron Pascagoula	F-1603		5/7/2007	6:04:58 PM	0.31	0.80	11.25	11.97	-0.55	1.02
Chevron Pascagoula	F-1603		5/7/2007	6:05:28 PM	0.21	0.30	11.28	11.99	-0.79	0.94
Chevron Pascagoula	F-1603		5/7/2007	6:05:58 PM	0.11	0.30	11.29	12.01	-1.40	0.89
Chevron Pascagoula	F-1603		5/7/2007	6:06:28 PM	0.11	0.30	11.29	12.02	-1.40	0.87
Chevron Pascagoula	F-1603		5/7/2007	6:06:58 PM	0.11	0.30	11.29	12.02	-1.59	0.86
Chevron Pascagoula	F-1603		5/7/2007	6:07:28 PM	0.07	0.30	11.30	12.02	-1.46	0.86
Chevron Pascagoula	F-1603		5/7/2007	6:07:58 PM	0.02	-0.20	11.30	12.02	-1.71	0.79
Chevron Pascagoula	F-1603		5/7/2007	6:08:28 PM	0.02	0.30	11.30	12.03	-1.89	0.77
Chevron Pascagoula	F-1603		5/7/2007	6:08:58 PM	0.01	0.30	12.01	12.03	-0.12	0.77
Chevron Pascagoula	F-1603	Calibration TTP	5/7/2007	6:08:59 PM	0.01	0.30	12.01	12.03	-0.18	0.75
Chevron Pascagoula	F-1603	Calibration TTP	5/7/2007	6:09:29 PM	0.02	-0.20	12.01	12.03	-0.37	0.76
Chevron Pascagoula	F-1603	Calibration TTP	5/7/2007	6:09:59 PM	0.01	-0.20	12.01	12.03	-0.43	0.74
Chevron Pascagoula	F-1603		5/7/2007	6:10:29 PM	0.02	-0.20	12.03	12.26	-0.61	-0.41
Chevron Pascagoula	F-1603		5/7/2007	6:10:59 PM	0.02	0.30	2.25	1.71	5.06	-0.52
Chevron Pascagoula	F-1603		5/7/2007	6:11:29 PM	0.01	0.80	0.23	0.26	14.57	-0.53
Chevron Pascagoula	F-1603		5/7/2007	6:11:59 PM	0.02	0.80	0.06	0.08	14.70	-0.59
Chevron Pascagoula	F-1603		5/7/2007	6:12:29 PM	0.02	0.80	0.03	0.05	14.63	-0.56
Chevron Pascagoula	F-1603		5/7/2007	6:12:59 PM	0.02	0.80	0.03	0.04	14.45	-0.56
Chevron Pascagoula	F-1603		5/7/2007	6:13:29 PM	0.02	0.80	0.02	0.03	14.39	-0.62
Chevron Pascagoula	F-1603		5/7/2007	6:13:59 PM	0.02	0.80	0.02	0.03	14.39	-0.60
Chevron Pascagoula	F-1603		5/7/2007	6:14:29 PM	0.01	0.80	0.01	0.01	14.57	-0.56
Chevron Pascagoula	F-1603		5/7/2007	6:14:59 PM	0.01	0.80	0.01	0.01	14.39	-0.65
Chevron Pascagoula	F-1603		5/7/2007	6:15:10 PM	0.02	0.80	0.01	0.00	14.70	-0.63
Chevron Pascagoula	F-1603	Calibration TTP	5/7/2007	6:15:40 PM	0.02	0.80	0.01	0.01	14.02	-0.66
Chevron Pascagoula	F-1603	Calibration TTP	5/7/2007	6:16:10 PM	0.02	0.80	0.01	0.01	14.57	-0.66
Chevron Pascagoula	F-1603		5/7/2007	6:16:40 PM	0.01	0.80	0.00	0.01	14.33	-0.69
Chevron Pascagoula	F-1603		5/7/2007	6:17:10 PM	0.01	0.80	0.01	0.01	14.09	-0.66
Chevron Pascagoula	F-1603		5/7/2007	6:17:40 PM	0.02	0.80	0.01	0.01	0.24	3.09
Chevron Pascagoula	F-1603		5/7/2007	6:18:10 PM	11.55	43.60	1.27	13.52	-0.49	0.56
Chevron Pascagoula	F-1603		5/7/2007	6:18:40 PM	13.77	178.90	1.69	16.33	0.79	0.21
Chevron Pascagoula	F-1603		5/7/2007	6:19:10 PM	13.68	190.00	1.71	16.66	2.62	0.05
Chevron Pascagoula	F-1603		5/7/2007	6:19:40 PM	13.57	192.55	1.75	16.67	3.96	0.01
Chevron Pascagoula	F-1603		5/7/2007	6:20:10 PM	13.37	194.95	1.79	16.63	4.57	-0.08
Chevron Pascagoula	F-1603		5/7/2007	6:20:40 PM	13.28	196.55	1.81	16.63	5.24	-0.11
Chevron Pascagoula	F-1603		5/7/2007	6:21:10 PM	13.28	198.50	1.82	16.63	5.73	-0.16
Chevron Pascagoula	F-1603		5/7/2007	6:21:40 PM	13.18	196.00	1.84	16.61	6.22	-0.18
Chevron Pascagoula	F-1603		5/7/2007	6:22:10 PM	12.98	201.45	1.87	16.59	6.34	-0.19
Chevron Pascagoula	F-1603		5/7/2007	6:22:40 PM	12.97	209.45	1.86	16.59	6.34	-0.24
Chevron Pascagoula	F-1603		5/7/2007	6:23:10 PM	13.07	207.95	1.79	16.66	6.65	-0.26
Chevron Pascagoula	F-1603		5/7/2007	6:23:40 PM	12.97	199.45	1.83	16.65	7.26	-0.25
Chevron Pascagoula	F-1603		5/7/2007	6:24:10 PM	12.68	205.95	1.81	16.64	7.38	-0.26
Chevron Pascagoula	F-1603		5/7/2007	6:24:40 PM	12.68	215.30	1.87	16.59	7.56	-0.28
Chevron Pascagoula	F-1603		5/7/2007	6:25:10 PM	12.47	221.30	1.84	16.60	7.74	-0.29
Chevron Pascagoula	F-1603		5/7/2007	6:25:40 PM	12.48	225.80	1.79	16.66	7.93	-0.31
Chevron Pascagoula	F-1603		5/7/2007	6:26:10 PM	12.68	212.80	1.77	16.66	8.05	-0.31
Chevron Pascagoula	F-1603		5/7/2007	6:26:40 PM	12.68	214.35	1.78	16.65	7.99	-0.28
Chevron Pascagoula	F-1603		5/7/2007	6:27:10 PM	12.77	213.85	1.77	16.67	8.17	-0.27
Chevron Pascagoula	F-1603		5/7/2007	6:27:40 PM	12.78	204.95	1.78	16.63	7.87	-0.29
Chevron Pascagoula	F-1603		5/7/2007	6:28:10 PM	12.78	213.85	1.75	16.66	7.93	-0.29
Chevron Pascagoula	F-1603		5/7/2007	6:28:40 PM	12.68	214.80	1.78	16.67	7.93	-0.27
Chevron Pascagoula	F-1603		5/7/2007	6:29:10 PM	12.78	208.50	1.80	16.65	8.05	-0.29
Chevron Pascagoula	F-1603		5/7/2007	6:29:40 PM	12.97	200.95	1.76	16.69	8.11	-0.25
Chevron Pascagoula	F-1603		5/7/2007	6:30:10 PM	12.48	199.95	1.71	16.73	8.05	-0.28
Chevron Pascagoula	F-1603		5/7/2007	6:30:40 PM	12.48	218.35	1.77	16.68	8.23	-0.28
Chevron Pascagoula	F-1603		5/7/2007	6:31:10 PM	12.78	210.45	1.83	16.61	8.11	-0.28
Chevron Pascagoula	F-1603		5/7/2007	6:31:40 PM	12.68	213.35	1.82	16.63	8.41	-0.30
Chevron Pascagoula	F-1603		5/7/2007	6:32:10 PM	12.77	212.40	1.83	16.60	8.05	-0.30
Chevron Pascagoula	F-1603		5/7/2007	6:32:40 PM	12.67	214.80	1.83	16.61	7.87	-0.30
Chevron Pascagoula	F-1603		5/7/2007	6:33:10 PM	12.67	211.85	1.84	16.59	7.74	-0.28
Chevron Pascagoula	F-1603		5/7/2007	6:33:40 PM	12.58	220.80	1.80	16.63	7.38	-0.31
Chevron Pascagoula	F-1603		5/7/2007	6:34:10 PM	12.58	220.80	1.80	16.62	7.13	-0.27
Chevron Pascagoula	F-1603		5/7/2007	6:34:40 PM	12.78	216.80	1.83	16.61	7.38	-0.30
Chevron Pascagoula	F-1603		5/7/2007	6:35:10 PM	12.77	214.80	1.94	16.53	7.20	-0.28

TRC Data Log Files

Client	Source	Run #	Date	Time	NOx (ppm)	CO (ppm)	O2 (%)	CO2(%)	SO2 (ppm)	THC (ppm)
Chevron Pascagoula	F-1603		5/7/2007	6:35:40 PM	12.78	219.30	1.93	16.53	6.95	-0.30
Chevron Pascagoula	F-1603		5/7/2007	6:36:10 PM	12.48	214.80	1.78	16.66	7.07	-0.29
Chevron Pascagoula	F-1603		5/7/2007	6:36:40 PM	12.17	219.30	1.77	16.66	7.44	-0.32
Chevron Pascagoula	F-1603		5/7/2007	6:37:10 PM	12.18	217.80	1.73	16.70	7.87	-0.29
Chevron Pascagoula	F-1603		5/7/2007	6:37:40 PM	12.28	222.75	1.72	16.70	7.74	-0.34
Chevron Pascagoula	F-1603		5/7/2007	6:38:10 PM	12.48	224.35	1.71	16.74	7.80	-0.28
Chevron Pascagoula	F-1603		5/7/2007	6:38:40 PM	12.68	206.45	1.77	16.71	7.56	-0.38
Chevron Pascagoula	F-1603		5/7/2007	6:39:10 PM	12.88	201.45	1.80	16.66	7.68	-0.34
Chevron Pascagoula	F-1603		5/7/2007	6:39:40 PM	12.67	200.00	1.75	16.69	7.80	-0.39
Chevron Pascagoula	F-1603		5/7/2007	6:40:10 PM	12.68	200.50	1.79	16.65	7.68	-0.41
Chevron Pascagoula	F-1603		5/7/2007	6:40:40 PM	12.78	204.00	1.79	16.66	7.74	-0.40
Chevron Pascagoula	F-1603		5/7/2007	6:41:10 PM	12.57	200.95	1.72	16.74	7.56	-0.39
Chevron Pascagoula	F-1603		5/7/2007	6:41:40 PM	12.78	198.50	1.67	16.79	7.38	-0.40
Chevron Pascagoula	F-1603		5/7/2007	6:42:10 PM	12.87	204.50	1.66	16.80	7.50	-0.39
Chevron Pascagoula	F-1603		5/7/2007	6:42:40 PM	12.67	206.45	1.66	16.80	7.74	-0.41
Chevron Pascagoula	F-1603		5/7/2007	6:43:10 PM	12.57	203.45	1.75	16.73	7.93	-0.40
Chevron Pascagoula	F-1603	Run C-3	5/7/2007	6:43:34 PM	12.57	219.85	1.72	16.73	7.87	-0.42
Chevron Pascagoula	F-1603	Run C-3	5/7/2007	6:44:04 PM	12.87	211.85	1.86	16.60	7.99	-0.40
Chevron Pascagoula	F-1603		5/7/2007	6:44:34 PM	12.87	210.90	1.82	16.64	7.87	-0.39
Chevron Pascagoula	F-1603		5/7/2007	6:44:50 PM	12.87	204.95	1.82	16.66	8.05	-0.36
Chevron Pascagoula	F-1603	Run C-3	5/7/2007	6:45:20 PM	12.77	207.45	1.88	16.60	7.99	-0.41
Chevron Pascagoula	F-1603	Run C-3	5/7/2007	6:45:50 PM	12.68	213.35	1.83	16.63	7.87	-0.42
Chevron Pascagoula	F-1603	Run C-3	5/7/2007	6:46:20 PM	12.47	217.35	1.73	16.72	7.56	-0.44
Chevron Pascagoula	F-1603	Run C-3	5/7/2007	6:46:50 PM	12.88	212.40	1.82	16.67	7.68	-0.42
Chevron Pascagoula	F-1603	Run C-3	5/7/2007	6:47:20 PM	12.77	209.95	1.84	16.62	7.99	-0.43
Chevron Pascagoula	F-1603	Run C-3	5/7/2007	6:47:50 PM	12.48	222.35	1.83	16.62	8.05	-0.45
Chevron Pascagoula	F-1603	Run C-3	5/7/2007	6:48:20 PM	12.39	220.35	1.82	16.64	8.23	-0.40
Chevron Pascagoula	F-1603	Run C-3	5/7/2007	6:48:50 PM	12.57	210.45	1.72	16.75	8.29	-0.41
Chevron Pascagoula	F-1603	Run C-3	5/7/2007	6:49:20 PM	12.28	219.30	1.78	16.69	8.35	-0.41
Chevron Pascagoula	F-1603	Run C-3	5/7/2007	6:49:50 PM	12.17	214.80	1.76	16.70	8.35	-0.40
Chevron Pascagoula	F-1603	Run C-3	5/7/2007	6:50:20 PM	12.38	208.95	1.73	16.71	8.54	-0.40
Chevron Pascagoula	F-1603	Run C-3	5/7/2007	6:50:50 PM	12.58	212.40	1.80	16.70	8.35	-0.44
Chevron Pascagoula	F-1603	Run C-3	5/7/2007	6:51:20 PM	12.57	209.45	1.83	16.66	8.66	-0.42
Chevron Pascagoula	F-1603	Run C-3	5/7/2007	6:51:50 PM	12.68	221.30	1.85	16.65	8.23	-0.44
Chevron Pascagoula	F-1603	Run C-3	5/7/2007	6:52:20 PM	12.67	216.35	1.84	16.65	8.72	-0.45
Chevron Pascagoula	F-1603	Run C-3	5/7/2007	6:52:50 PM	12.48	211.40	1.84	16.62	8.23	-0.42
Chevron Pascagoula	F-1603	Run C-3	5/7/2007	6:53:20 PM	12.37	234.70	1.71	16.75	7.44	-0.45
Chevron Pascagoula	F-1603	Run C-3	5/7/2007	6:53:50 PM	12.48	215.30	1.71	16.78	8.05	-0.44
Chevron Pascagoula	F-1603	Run C-3	5/7/2007	6:54:20 PM	12.67	204.95	1.73	16.77	8.05	-0.46
Chevron Pascagoula	F-1603	Run C-3	5/7/2007	6:54:50 PM	12.77	205.95	1.72	16.79	7.99	-0.40
Chevron Pascagoula	F-1603	Run C-3	5/7/2007	6:55:20 PM	12.58	191.50	1.68	16.82	8.23	-0.42
Chevron Pascagoula	F-1603	Run C-3	5/7/2007	6:55:50 PM	12.48	204.00	1.77	16.72	8.23	-0.41
Chevron Pascagoula	F-1603	Run C-3	5/7/2007	6:56:20 PM	12.38	200.50	1.73	16.75	8.23	-0.39
Chevron Pascagoula	F-1603	Run C-3	5/7/2007	6:56:50 PM	12.58	204.95	1.79	16.69	8.48	-0.41
Chevron Pascagoula	F-1603	Run C-3	5/7/2007	6:57:20 PM	12.48	213.85	1.76	16.73	8.17	-0.38
Chevron Pascagoula	F-1603	Run C-3	5/7/2007	6:57:50 PM	12.57	214.80	1.79	16.70	8.23	-0.40
Chevron Pascagoula	F-1603	Run C-3	5/7/2007	6:58:20 PM	12.68	210.45	1.82	16.69	8.11	-0.37
Chevron Pascagoula	F-1603	Run C-3	5/7/2007	6:58:50 PM	12.68	209.45	1.84	16.64	8.05	-0.38
Chevron Pascagoula	F-1603	Run C-3	5/7/2007	6:59:20 PM	12.68	222.75	1.85	16.64	8.29	-0.36
Chevron Pascagoula	F-1603	Run C-3	5/7/2007	6:59:50 PM	12.48	212.85	1.83	16.66	7.93	-0.33
Chevron Pascagoula	F-1603	Run C-3	5/7/2007	7:00:20 PM	12.57	210.90	1.83	16.65	7.74	-0.33
Chevron Pascagoula	F-1603	Run C-3	5/7/2007	7:00:50 PM	12.58	206.90	1.81	16.68	7.26	-0.37
Chevron Pascagoula	F-1603	Run C-3	5/7/2007	7:01:20 PM	12.77	206.45	1.82	16.67	7.26	-0.35
Chevron Pascagoula	F-1603	Run C-3	5/7/2007	7:01:50 PM	12.48	220.35	1.86	16.63	7.80	-0.33
Chevron Pascagoula	F-1603	Run C-3	5/7/2007	7:02:20 PM	12.18	229.25	1.86	16.61	8.05	-0.34
Chevron Pascagoula	F-1603	Run C-3	5/7/2007	7:02:50 PM	12.19	238.70	1.81	16.64	7.99	-0.35
Chevron Pascagoula	F-1603	Run C-3	5/7/2007	7:03:20 PM	12.38	246.35	1.83	16.65	7.99	-0.35
Chevron Pascagoula	F-1603	Run C-3	5/7/2007	7:03:50 PM	12.38	227.80	1.79	16.67	8.35	-0.34
Chevron Pascagoula	F-1603	Run C-3	5/7/2007	7:04:20 PM	12.38	222.30	1.84	16.64	8.29	-0.32
Chevron Pascagoula	F-1603	Run C-3	5/7/2007	7:04:50 PM	12.47	221.80	1.82	16.68	8.11	-0.31
Chevron Pascagoula	F-1603	Run C-3	5/7/2007	7:05:20 PM	12.38	220.35	1.75	16.73	8.29	-0.34
Chevron Pascagoula	F-1603	Run C-3	5/7/2007	7:05:50 PM	12.48	214.80	1.76	16.72	8.17	-0.35
Chevron Pascagoula	F-1603	Run C-3	5/7/2007	7:06:20 PM	12.47	207.45	1.76	16.72	8.11	-0.34
Chevron Pascagoula	F-1603	Run C-3	5/7/2007	7:06:50 PM	12.68	213.35	1.80	16.69	7.80	-0.30

TRC Data Log Files

Client	Source	Run #	Date	Time	NOx (ppm)	CO (ppm)	O2 (%)	CO2(%)	SO2 (ppm)	THC (ppm)
Chevron Pascagoula	F-1603	Run C-3	5/7/2007	7:07:20 PM	12.58	217.30	1.80	16.67	7.62	-0.30
Chevron Pascagoula	F-1603	Run C-3	5/7/2007	7:07:50 PM	12.77	223.85	1.77	16.72	7.68	-0.29
Chevron Pascagoula	F-1603	Run C-3	5/7/2007	7:08:20 PM	12.29	232.75	1.70	16.77	8.05	-0.27
Chevron Pascagoula	F-1603	Run C-3	5/7/2007	7:08:50 PM	12.37	213.85	1.79	16.69	8.11	-0.25
Chevron Pascagoula	F-1603	Run C-3	5/7/2007	7:09:20 PM	12.29	219.30	1.78	16.71	8.23	-0.29
Chevron Pascagoula	F-1603	Run C-3	5/7/2007	7:09:50 PM	12.38	212.40	1.76	16.72	8.35	-0.26
Chevron Pascagoula	F-1603	Run C-3	5/7/2007	7:10:20 PM	12.48	213.85	1.78	16.70	8.48	-0.31
Chevron Pascagoula	F-1603	Run C-3	5/7/2007	7:10:50 PM	12.47	214.35	1.82	16.68	8.23	-0.33
Chevron Pascagoula	F-1603	Run C-3	5/7/2007	7:11:20 PM	12.49	213.85	1.86	16.63	7.99	-0.29
Chevron Pascagoula	F-1603	Run C-3	5/7/2007	7:11:50 PM	12.58	218.80	1.83	16.64	7.74	-0.29
Chevron Pascagoula	F-1603	Run C-3	5/7/2007	7:12:20 PM	12.47	224.75	1.79	16.69	8.05	-0.31
Chevron Pascagoula	F-1603	Run C-3	5/7/2007	7:12:50 PM	12.47	209.45	1.80	16.67	8.23	-0.29
Chevron Pascagoula	F-1603	Run C-3	5/7/2007	7:13:20 PM	12.58	214.80	1.80	16.67	8.17	-0.27
Chevron Pascagoula	F-1603	Run C-3	5/7/2007	7:13:50 PM	12.67	210.45	1.82	16.69	7.87	0.52
Chevron Pascagoula	F-1603	Run C-3	5/7/2007	7:14:20 PM	12.47	201.45	1.70	16.77	7.87	0.52
Chevron Pascagoula	F-1603	Run C-3	5/7/2007	7:14:50 PM	12.48	198.95	1.80	16.69	8.35	0.53
Chevron Pascagoula	F-1603	Run C-3	5/7/2007	7:15:20 PM	12.28	210.90	1.77	16.70	8.41	0.52
Chevron Pascagoula	F-1603	Run C-3	5/7/2007	7:15:50 PM	12.29	220.35	1.78	16.70	8.41	0.50
Chevron Pascagoula	F-1603	Run C-3	5/7/2007	7:16:20 PM	12.27	221.30	1.76	16.71	8.48	0.51
Chevron Pascagoula	F-1603	Run C-3	5/7/2007	7:16:50 PM	12.48	215.85	1.85	16.62	8.48	0.52
Chevron Pascagoula	F-1603	Run C-3	5/7/2007	7:17:20 PM	12.37	220.35	1.79	16.67	8.23	0.55
Chevron Pascagoula	F-1603	Run C-3	5/7/2007	7:17:50 PM	12.38	228.35	1.83	16.66	8.17	0.51
Chevron Pascagoula	F-1603	Run C-3	5/7/2007	7:18:20 PM	12.38	215.85	1.80	16.67	8.17	0.50
Chevron Pascagoula	F-1603	Run C-3	5/7/2007	7:18:50 PM	12.48	208.95	1.78	16.69	7.99	0.48
Chevron Pascagoula	F-1603	Run C-3	5/7/2007	7:19:20 PM	12.38	209.45	1.83	16.67	7.74	0.50
Chevron Pascagoula	F-1603	Run C-3	5/7/2007	7:19:50 PM	12.38	212.40	1.82	16.66	7.93	0.53
Chevron Pascagoula	F-1603	Run C-3	5/7/2007	7:20:20 PM	12.28	212.40	1.69	16.80	8.05	0.49
Chevron Pascagoula	F-1603	Run C-3	5/7/2007	7:20:50 PM	12.08	195.45	1.65	16.84	8.05	0.59
Chevron Pascagoula	F-1603	Run C-3	5/7/2007	7:21:20 PM	12.09	204.00	1.77	16.70	8.11	0.53
Chevron Pascagoula	F-1603	Run C-3	5/7/2007	7:21:50 PM	11.88	212.85	1.68	16.79	8.11	0.51
Chevron Pascagoula	F-1603	Run C-3	5/7/2007	7:22:20 PM	12.28	200.50	1.77	16.71	8.23	0.53
Chevron Pascagoula	F-1603	Run C-3	5/7/2007	7:22:50 PM	12.09	202.50	1.75	16.72	8.35	0.57
Chevron Pascagoula	F-1603	Run C-3	5/7/2007	7:23:20 PM	12.08	214.35	1.72	16.74	8.66	0.56
Chevron Pascagoula	F-1603	Run C-3	5/7/2007	7:23:50 PM	12.19	235.80	1.68	16.80	8.54	0.57
Chevron Pascagoula	F-1603	Run C-3	5/7/2007	7:24:20 PM	12.38	194.50	1.73	16.76	8.54	0.61
Chevron Pascagoula	F-1603	Run C-3	5/7/2007	7:24:50 PM	12.28	197.00	1.76	16.74	8.60	0.57
Chevron Pascagoula	F-1603	Run C-3	5/7/2007	7:25:20 PM	12.19	210.45	1.72	16.76	8.05	0.58
Chevron Pascagoula	F-1603	Run C-3	5/7/2007	7:25:50 PM	12.19	214.80	1.70	16.79	8.35	0.56
Chevron Pascagoula	F-1603	Run C-3	5/7/2007	7:26:20 PM	12.37	208.50	1.75	16.71	8.17	0.56
Chevron Pascagoula	F-1603	Run C-3	5/7/2007	7:26:50 PM	12.38	202.50	1.68	16.79	8.41	0.56
Chevron Pascagoula	F-1603	Run C-3	5/7/2007	7:27:20 PM	11.98	212.40	1.68	16.77	8.29	0.58
Chevron Pascagoula	F-1603	Run C-3	5/7/2007	7:27:50 PM	11.98	215.30	1.73	16.74	8.78	0.59
Chevron Pascagoula	F-1603	Run C-3	5/7/2007	7:28:20 PM	11.98	209.45	1.79	16.69	8.84	0.59
Chevron Pascagoula	F-1603	Run C-3	5/7/2007	7:28:50 PM	12.09	206.90	1.83	16.64	8.60	0.60
Chevron Pascagoula	F-1603	Run C-3	5/7/2007	7:29:20 PM	11.98	207.45	1.83	16.62	8.35	0.61
Chevron Pascagoula	F-1603	Run C-3	5/7/2007	7:29:50 PM	11.88	215.30	1.79	16.70	8.41	0.61
Chevron Pascagoula	F-1603	Run C-3	5/7/2007	7:30:20 PM	12.08	206.90	1.78	16.69	8.23	0.57
Chevron Pascagoula	F-1603	Run C-3	5/7/2007	7:30:50 PM	11.99	206.90	1.83	16.65	8.29	0.56
Chevron Pascagoula	F-1603	Run C-3	5/7/2007	7:31:20 PM	11.98	208.95	1.80	16.67	8.23	0.57
Chevron Pascagoula	F-1603	Run C-3	5/7/2007	7:31:50 PM	12.09	211.90	1.87	16.61	7.80	0.59
Chevron Pascagoula	F-1603	Run C-3	5/7/2007	7:32:20 PM	11.99	220.80	1.95	16.54	7.50	0.58
Chevron Pascagoula	F-1603	Run C-3	5/7/2007	7:32:50 PM	12.08	220.80	1.93	16.56	7.38	0.56
Chevron Pascagoula	F-1603	Run C-3	5/7/2007	7:33:20 PM	11.78	213.35	1.79	16.69	7.44	0.58
Chevron Pascagoula	F-1603	Run C-3	5/7/2007	7:33:50 PM	11.49	212.85	1.80	16.69	7.20	0.59
Chevron Pascagoula	F-1603	Run C-3	5/7/2007	7:34:20 PM	11.68	212.40	1.89	16.58	6.89	0.57
Chevron Pascagoula	F-1603	Run C-3	5/7/2007	7:34:50 PM	11.79	225.80	1.98	16.49	7.32	0.60
Chevron Pascagoula	F-1603	Run C-3	5/7/2007	7:35:20 PM	11.48	237.25	1.92	16.55	7.44	0.58
Chevron Pascagoula	F-1603	Run C-3	5/7/2007	7:35:50 PM	11.59	227.80	1.87	16.60	7.13	0.57
Chevron Pascagoula	F-1603	Run C-3	5/7/2007	7:36:20 PM	11.59	226.30	1.86	16.61	7.13	0.56
Chevron Pascagoula	F-1603	Run C-3	5/7/2007	7:36:50 PM	11.58	219.30	1.85	16.61	7.56	0.55
Chevron Pascagoula	F-1603	Run C-3	5/7/2007	7:37:20 PM	11.59	218.35	1.85	16.62	7.20	0.59
Chevron Pascagoula	F-1603	Run C-3	5/7/2007	7:37:50 PM	11.59	221.35	1.86	16.61	7.26	0.63
Chevron Pascagoula	F-1603	Run C-3	5/7/2007	7:38:20 PM	11.78	229.30	1.84	16.62	7.20	0.58
Chevron Pascagoula	F-1603	Run C-3	5/7/2007	7:38:50 PM	11.89	215.85	1.81	16.67	6.77	0.56

TRC Data Log Files

Client	Source	Run #	Date	Time	NOx (ppm)	CO (ppm)	O2 (%)	CO2(%)	SO2 (ppm)	THC (ppm)
Chevron Pascagoula	F-1603	Run C-3	5/7/2007	7:39:20 PM	11.89	208.50	1.77	16.70	6.71	0.58
Chevron Pascagoula	F-1603	Run C-3	5/7/2007	7:39:50 PM	11.58	216.40	1.81	16.67	6.77	0.60
Chevron Pascagoula	F-1603	Run C-3	5/7/2007	7:40:21 PM	11.49	218.35	1.86	16.59	6.89	0.60
Chevron Pascagoula	F-1603	Run C-3	5/7/2007	7:40:51 PM	11.48	226.75	1.84	16.63	6.16	0.58
Chevron Pascagoula	F-1603	Run C-3	5/7/2007	7:41:21 PM	11.59	218.80	1.86	16.59	6.40	0.57
Chevron Pascagoula	F-1603	Run C-3	5/7/2007	7:41:51 PM	11.49	217.35	1.80	16.66	5.85	0.56
Chevron Pascagoula	F-1603	Run C-3	5/7/2007	7:42:21 PM	11.58	213.35	1.79	16.66	5.91	0.64
Chevron Pascagoula	F-1603	Run C-3	5/7/2007	7:42:51 PM	11.68	232.30	1.81	16.67	5.67	0.63
Chevron Pascagoula	F-1603	Run C-3	5/7/2007	7:43:21 PM	11.59	226.75	1.80	16.68	5.30	0.56
Chevron Pascagoula	F-1603	Run C-3	5/7/2007	7:43:51 PM	11.58	218.80	1.75	16.73	5.30	0.57
Chevron Pascagoula	F-1603	Run C-3	5/7/2007	7:44:21 PM	11.79	214.80	1.81	16.66	4.94	0.57
Chevron Pascagoula	F-1603	Run C-3	5/7/2007	7:44:51 PM	11.78	210.45	1.85	16.64	5.00	0.59
Chevron Pascagoula	F-1603		5/7/2007	7:45:21 PM	11.69	208.95	1.88	16.59	5.00	0.59
Chevron Pascagoula	F-1603		5/7/2007	7:45:51 PM	11.69	215.30	1.86	16.62	4.51	0.61
Chevron Pascagoula	F-1603		5/7/2007	7:46:21 PM	11.39	220.80	1.86	16.63	4.57	0.56
Chevron Pascagoula	F-1603		5/7/2007	7:46:51 PM	11.28	218.35	1.88	16.58	4.45	0.61
Chevron Pascagoula	F-1603		5/7/2007	7:47:21 PM	11.38	226.75	1.89	16.58	4.33	0.58
Chevron Pascagoula	F-1603		5/7/2007	7:47:51 PM	11.29	234.30	1.85	16.62	4.15	0.57
Chevron Pascagoula	F-1603		5/7/2007	7:48:21 PM	11.49	221.30	1.86	16.62	4.15	0.58
Chevron Pascagoula	F-1603		5/7/2007	7:48:51 PM	11.49	220.35	1.90	16.59	3.90	0.55
Chevron Pascagoula	F-1603		5/7/2007	7:49:21 PM	11.49	214.80	1.90	16.18	3.90	1.23
Chevron Pascagoula	F-1603		5/7/2007	7:49:51 PM	21.85	192.05	2.57	6.12	3.78	84.60
Chevron Pascagoula	F-1603		5/7/2007	7:50:21 PM	83.55	113.50	0.13	0.40	2.62	85.89
Chevron Pascagoula	F-1603		5/7/2007	7:50:51 PM	86.64	88.10	0.01	0.09	1.59	86.41
Chevron Pascagoula	F-1603		5/7/2007	7:51:21 PM	86.74	86.60	0.00	0.06	1.22	85.20
Chevron Pascagoula	F-1603		5/7/2007	7:51:22 PM	86.75	86.60	0.00	0.06	1.28	85.13
Chevron Pascagoula	F-1603	Calibration TTP	5/7/2007	7:51:52 PM	86.58	86.60	0.01	0.05	1.04	85.26
Chevron Pascagoula	F-1603	Calibration TTP	5/7/2007	7:52:22 PM	86.65	86.10	0.00	0.05	0.61	85.44
Chevron Pascagoula	F-1603		5/7/2007	7:52:52 PM	86.45	86.60	0.00	0.04	-0.06	85.36
Chevron Pascagoula	F-1603		5/7/2007	7:53:22 PM	86.44	86.05	0.00	0.03	0.24	85.64
Chevron Pascagoula	F-1603		5/7/2007	7:53:52 PM	86.45	86.60	0.00	0.02	0.00	85.72
Chevron Pascagoula	F-1603		5/7/2007	7:54:22 PM	86.55	86.60	0.00	0.02	-0.12	85.73
Chevron Pascagoula	F-1603		5/7/2007	7:54:52 PM	86.54	86.60	0.00	0.03	-0.37	81.71
Chevron Pascagoula	F-1603		5/7/2007	7:55:22 PM	85.95	55.70	0.00	0.08	0.06	35.19
Chevron Pascagoula	F-1603		5/7/2007	7:55:52 PM	41.60	49.60	5.94	7.33	-0.37	1.71
Chevron Pascagoula	F-1603		5/7/2007	7:56:22 PM	2.71	19.20	11.57	11.31	-0.55	1.69
Chevron Pascagoula	F-1603		5/7/2007	7:56:52 PM	0.51	1.25	11.93	11.90	-0.30	1.40
Chevron Pascagoula	F-1603		5/7/2007	7:57:22 PM	0.31	0.30	11.97	11.95	-0.43	1.29
Chevron Pascagoula	F-1603		5/7/2007	7:57:26 PM	0.21	0.30	11.97	11.96	-0.37	1.30
Chevron Pascagoula	F-1603	Calibration TTP	5/7/2007	7:57:56 PM	0.21	-0.20	11.98	11.98	-0.49	1.27
Chevron Pascagoula	F-1603	Calibration TTP	5/7/2007	7:58:26 PM	0.22	0.30	11.98	11.98	-0.67	1.25
Chevron Pascagoula	F-1603		5/7/2007	7:58:56 PM	0.12	-0.20	11.99	11.96	-0.79	1.25
Chevron Pascagoula	F-1603		5/7/2007	7:59:26 PM	0.12	0.30	4.88	4.04	12.68	0.05
Chevron Pascagoula	F-1603		5/7/2007	7:59:56 PM	0.11	0.30	0.77	0.73	14.45	0.00
Chevron Pascagoula	F-1603	Calibration TTP	5/7/2007	8:00:11 PM	0.12	0.80	0.34	0.36	14.76	0.00
Chevron Pascagoula	F-1603	Calibration TTP	5/7/2007	8:00:41 PM	0.11	0.80	0.07	0.10	14.94	0.02
Chevron Pascagoula	F-1603		5/7/2007	8:01:11 PM	0.12	0.80	0.02	0.04	15.18	-0.01
Chevron Pascagoula	F-1603		5/7/2007	8:01:41 PM	0.11	0.80	0.01	0.06	15.12	1.85

APPENDIX G:
CALIBRATIONS AND CERTIFICATIONS

Spectra Gases Inc.

3434 Route 22 West, Branchburg, New Jersey 08876 USA

ISO 9001:2000

Shipped from: 80 Industrial Drive, Alpha, NJ 08865

CERTIFICATE OF ANALYSIS

EPA PROTOCOL MIXTURE

PROCEDURE # : G1

CUSTOMER: Cubix Corporation
SGI ORDER # : 0080723
ITEM# : 5
P.O.# : 2005891,T9JIM

CYLINDER # : CC-128336
CYLINDER PRES: 2000 PSIG
CGA OUTLET: 590

CERTIFICATION DATE: 11/28/2005
EXPIRATION DATE: 11/28/2008

CERTIFICATION HISTORY

COMPONENT	DATE OF ASSAY	MEAN CONCENTRATION	CERTIFIED CONCENTRATION	ANALYTICAL ACCURACY
Carbon Dioxide	11/28/2005	4.48 %	4.48 %	+/- 1%
Oxygen	11/28/2005	20.9 %	20.9 %	+/- 1%

BALANCE Nitrogen
PREVIOUS CERTIFICATION DATES: None

REFERENCE STANDARDS

COMPONENT	SRM/NTRM#	CYLINDER#	CONCENTRATION
Carbon Dioxide	GMIS-1	CC-85169	5.02 %
Oxygen	NTRM-82659x	CC-83894	22.8 %

INSTRUMENTATION

COMPONENT	MAKE/MODEL	SERIAL #	DETECTOR	CALIBRATION DATE(S)
Carbon Dioxide	CAI-300	S03001	NDIR	10/28/2005
Oxygen	CAI-300	S03001	PM	11/22/2005

THIS STANDARD IS NIST TRACEABLE. IT WAS CERTIFIED ACCORDING TO THE EPA PROTOCOL PROCEDURES.
DO NOT USE THIS STANDARD IF THE CYLINDER PRESSURE IS LESS THAN 150 PSIG.

Cheryl L Patino

ANALYST: _____ **DATE:** 11/28/2005
CHERYL PATINO

Tel: +1 908-252-9300 Fax: +1 908-252-0811
www.spectragases.com

Spectra Gases Inc.

3434 Route 22 West, Branchburg, New Jersey 08876 USA

ISO 9001:2000

Shipped from: 80 Industrial Drive, Alpha, NJ 08865

CERTIFICATE OF ANALYSIS

EPA PROTOCOL MIXTURE

PROCEDURE # : G1

CUSTOMER: TRC Air Measurements
SGI ORDER # : 100685
ITEM# : 1
P.O.# : 2006502,T9WOOD

CYLINDER # : CC-55731
CYLINDER PRES: 2000 PSIG
CGA OUTLET: 590

CERTIFICATION DATE: 12/20/2006
EXPIRATION DATE: 12/20/2009

CERTIFICATION HISTORY

COMPONENT	DATE OF ASSAY	MEAN CONCENTRATION	CERTIFIED CONCENTRATION	ANALYTICAL ACCURACY
Carbon Dioxide	12/20/2006	12.11 %	12.11 %	+/- 1%
Oxygen	12/20/2006	12.00 %	12.00 %	+/- 1%

BALANCE Nitrogen
PREVIOUS CERTIFICATION DATES: None

REFERENCE STANDARDS

COMPONENT	SRM/NTRM#	CYLINDER#	CONCENTRATION
Carbon Dioxide	GMIS-1	CC-117398	10.01 %
Oxygen	NTRM-82659x	CC-83906	22.8 %

INSTRUMENTATION

COMPONENT	MAKE/MODEL	SERIAL #	DETECTOR	CALIBRATION DATE(S)
Carbon Dioxide	Horiba VIA-510	571417045	NDIR	12/14/2006
Oxygen	CAI-300	S03001	PM	11/20/2006

THIS STANDARD IS NIST TRACEABLE. IT WAS CERTIFIED ACCORDING TO THE EPA PROTOCOL PROCEDURES.
DO NOT USE THIS STANDARD IF THE CYLINDER PRESSURE IS LESS THAN 150 PSIG.

ANALYST: _____ **DATE:** 12/20/2006
JAMES SCHMIDT

Tel: +1 908-252-9300 Fax: +1 908-252-0811
www.spectragases.com

SPECTRA GASES INC.
3434 Route 22 West • Branchburg, NJ 08876 USA Tel.: (908) 252-9300 • (800) 932-0624 • Fax: (908) 252-0811
Shipped From: 80 Industrial Drive • Alpha, NJ 08865

CERTIFICATE OF ANALYSIS

EPA PROTOCOL MIXTURE

PROCEDURE # : G2

CUSTOMER: Cubix Corporation
SGI ORDER # : 0056591
ITEM# : 1
P.O.# : 2004431,T9PEY

CYLINDER # : CC-85164
CYLINDER PRES: 1900 PSIG
CGA OUTLET: 580

CERTIFICATION DATE: 7/23/2004
EXPIRATION DATE: 07/23/2007

CERTIFICATION HISTORY

COMPONENT	DATE OF ASSAY	MEAN CONCENTRATION	CERTIFIED CONCENTRATION	ANALYTICAL ACCURACY
Carbon Dioxide	7/23/2004	20.8 %	20.8 %	+/- 1.5%
Oxygen	7/23/2004	4.48 %	4.48 %	+/- 1%

BALANCE Nitrogen
PREVIOUS CERTIFICATION DATES: None

REFERENCE STANDARDS

COMPONENT	SRM/NTRM#	CYLINDER#	CONCENTRATION
Carbon Dioxide	NTRM-82745x	CC-79803	20.0 %
Oxygen	GMIS-1	CC-106741	4.99 %

INSTRUMENTATION

COMPONENT	MAKE/MODEL	SERIAL #	DETECTOR	CALIBRATION DATE(S)
Carbon Dioxide	Horiba VIA-510	571417045	NDIR	7/15/2004
Oxygen	Horiba MPA-510	570694081	PM	7/2/2004

THIS STANDARD IS NIST TRACEABLE. IT WAS CERTIFIED ACCORDING TO THE EPA PROTOCOL PROCEDURES.
DO NOT USE THIS STANDARD IF THE CYLINDER PRESSURE IS LESS THAN 150 PSIG.

Cheryl L Patino

ANALYST: _____ **DATE:** 7/23/2004
CHERYL PATINO

3434 Route 22 West, Branchburg, New Jersey 08876 USA

Spectra Gases Inc.

ISO 9001:2000

Shipped from: 80 Industrial Drive, Alpha, NJ 08865

CERTIFICATE OF ANALYSIS

EPA PROTOCOL MIXTURE

PROCEDURE # : G1

CUSTOMER: TRC Air Measurements
SGI ORDER # : 0106190
ITEM# : 1
P.O.# : 2006603,T9WOOD

CYLINDER # : CC-84911
CYLINDER PRES: 2000 PSIG
CGA OUTLET: 660

CERTIFICATION DATE: 4/2/2007
EXPIRATION DATE: 4/2/2009

CERTIFICATION HISTORY

COMPONENT	DATE OF ASSAY	MEAN CONCENTRATION	CERTIFIED CONCENTRATION	ANALYTICAL ACCURACY
Carbon Monoxide	3/20/2007 4/2/2007	25.18 ppm 25.03 ppm	25.1 ppm	+/- 1%
Nitric Oxide	3/22/2007 4/2/2007	24.90 ppm 24.83 ppm	24.9 ppm	+/- 1%
NOx			24.9 ppm	Reference Value Only
Propane	3/27/2007	25.1 ppm	25.1 ppm	+/- 1%

BALANCE Nitrogen
PREVIOUS CERTIFICATION DATES: None

REFERENCE STANDARDS

COMPONENT	SRM/NTRM#	CYLINDER#	CONCENTRATION
Carbon Monoxide	GMIS-1	CC-118759	49.7 ppm
Nitric Oxide	NTRM-81684	CC-202704	98.8 ppm
Propane	GMIS-1	CC-113884	100.3 ppm

INSTRUMENTATION

COMPONENT	MAKE/MODEL	SERIAL #	DETECTOR	CALIBRATION DATE(S)
Carbon Monoxide	Horiba VIA-510	H0002L2Y	NDIR	3/15/2007
Nitric Oxide	CAI-400-CLD	6L09004	Chemi	3/14/2007
Propane	H. Packard 6890	US00001434	GC - FID	3/12/2007

THIS STANDARD IS NIST TRACEABLE. IT WAS CERTIFIED ACCORDING TO THE EPA PROTOCOL PROCEDURES.
DO NOT USE THIS STANDARD IF THE CYLINDER PRESSURE IS LESS THAN 150 PSIG.

ANALYST: _____ **DATE:** 4/2/2007
FRED PIKULA

Tel: +1 908-252-9300 Fax: +1 908-252-0811
www.spectragases.com

3434 Route 22 West, Branchburg, New Jersey 08876 USA

Spectra Gases Inc.

ISO 9001:2000

Shipped from: 80 Industrial Drive, Alpha, NJ 08865

CERTIFICATE OF ANALYSIS

EPA PROTOCOL MIXTURE

PROCEDURE # : G1

CUSTOMER: TRC Air Measurements
SGI ORDER # : 0106190
ITEM# : 2
P.O.# : 2006603,T9WOOD

CYLINDER # : CC-80853
CYLINDER PRES: 2000 PSIG
CGA OUTLET: 660

CERTIFICATION DATE: 4/2/2007
EXPIRATION DATE: 4/2/2009

CERTIFICATION HISTORY

COMPONENT	DATE OF ASSAY	MEAN CONCENTRATION	CERTIFIED CONCENTRATION	ANALYTICAL ACCURACY
Carbon Monoxide	3/21/2007 4/2/2007	45.67 ppm 45.48 ppm	45.6 ppm	+/- 1%
Nitric Oxide	3/22/2007 4/2/2007	44.88 ppm 44.97 ppm	44.9 ppm	+/- 1%
NOx			45.0 ppm	Reference Value Only
Propane	3/27/2007	45.2 ppm	45.2 ppm	+/- 1%

BALANCE Nitrogen
PREVIOUS CERTIFICATION DATES: None

REFERENCE STANDARDS

COMPONENT	SRM/NTRM#	CYLINDER#	CONCENTRATION
Carbon Monoxide	GMIS-1	CC-118759	49.7 ppm
Nitric Oxide	NTRM-81684	CC-202704	98.8 ppm
Propane	GMIS-1	CC-113884	100.3 ppm

INSTRUMENTATION

COMPONENT	MAKE/MODEL	SERIAL #	DETECTOR	CALIBRATION DATE(S)
Carbon Monoxide	Horiba VIA-510	H0002L2Y	NDIR	3/15/2007
Nitric Oxide	CAI-400-CLD	6L09004	Chemi	3/14/2007
Propane	H. Packard 6890	US00001434	GC - FID	3/12/2007

THIS STANDARD IS NIST TRACEABLE. IT WAS CERTIFIED ACCORDING TO THE EPA PROTOCOL PROCEDURES.
DO NOT USE THIS STANDARD IF THE CYLINDER PRESSURE IS LESS THAN 150 PSIG.

Cheryl L Patino

ANALYST: _____ **DATE:** 4/2/2007
CHERYL PATINO

Tel: +1 908-252-9300 Fax: +1 908-252-0811
www.spectragases.com

Spectra Gases Inc.

3434 Route 22 West, Branchburg, New Jersey 08876 USA

ISO 9001:2000

Shipped from: 80 Industrial Drive, Alpha, NJ 08865

CERTIFICATE OF ANALYSIS

EPA PROTOCOL MIXTURE

PROCEDURE # : G1

CUSTOMER: TRC Air Measurements
SGI ORDER # : 0106190
ITEM# : 3
P.O.# : 2006603,T9WOOD

CYLINDER # : CC-94575
CYLINDER PRES: 2000 PSIG
CGA OUTLET: 660

CERTIFICATION DATE: 4/2/2007
EXPIRATION DATE: 4/2/2009

CERTIFICATION HISTORY

COMPONENT	DATE OF ASSAY	MEAN CONCENTRATION	CERTIFIED CONCENTRATION	ANALYTICAL ACCURACY
Carbon Monoxide	3/21/2007 4/2/2007	85.21 ppm 85.18 ppm	85.2 ppm	+/- 1%
Nitric Oxide	3/22/2007 4/2/2007	84.72 ppm 84.63 ppm	84.7 ppm	+/- 1%
NOx			84.7 ppm	Reference Value Only
Propane	3/27/2007	84.9 ppm	84.9 ppm	+/- 1%

BALANCE Nitrogen
PREVIOUS CERTIFICATION DATES: None

REFERENCE STANDARDS

COMPONENT	SRM/NTRM#	CYLINDER#	CONCENTRATION
Carbon Monoxide	GMIS-1	CC-135374	101.0 ppm
Nitric Oxide	NTRM-81684	CC-202704	98.8 ppm
Propane	GMIS-1	CC-113884	100.3 ppm

INSTRUMENTATION

COMPONENT	MAKE/MODEL	SERIAL #	DETECTOR	CALIBRATION DATE(S)
Carbon Monoxide	Horiba VIA-510	H0002L2Y	NDIR	3/21/2007
Nitric Oxide	CAI-400-CLD	6L09004	Chemi	3/14/2007
Propane	H. Packard 6890	US00001434	GC - FID	3/12/2007

THIS STANDARD IS NIST TRACEABLE. IT WAS CERTIFIED ACCORDING TO THE EPA PROTOCOL PROCEDURES.
DO NOT USE THIS STANDARD IF THE CYLINDER PRESSURE IS LESS THAN 150 PSIG.

Cheryl L Patino

ANALYST: _____ **DATE:** 4/2/2007
CHERYL PATINO

Tel: +1 908-252-9300 Fax: +1 908-252-0811
www.spectragases.com

Spectra Gases Inc.

3434 Route 22 West, Branchburg, New Jersey 08876 USA

ISO 9001:2000

Shipped from: 80 Industrial Drive, Alpha, NJ 08865

CERTIFICATE OF ANALYSIS

EPA PROTOCOL MIXTURE

PROCEDURE # : G1

CUSTOMER: TRC Air Measurements
SGI ORDER # : 0106190
ITEM# : 4
P.O.# : 2006603,T9WOOD

CYLINDER # : CC-18292
CYLINDER PRES: 2000 PSIG
CGA OUTLET: 660

CERTIFICATION DATE: 4/2/2007
EXPIRATION DATE: 4/2/2009

CERTIFICATION HISTORY

COMPONENT	DATE OF ASSAY	MEAN CONCENTRATION	CERTIFIED CONCENTRATION	ANALYTICAL ACCURACY
Carbon Monoxide	3/23/2007 4/2/2007	143.7 ppm 143.8 ppm	143.7 ppm	+/- 1%
Nitric Oxide	3/20/2007 4/2/2007	138.2 ppm 137.9 ppm	138.0 ppm	+/- 1%
NOx			138.0 ppm	Reference Value Only
Propane	3/28/2007	139.3 ppm	139.3 ppm	+/- 1%

BALANCE Nitrogen
PREVIOUS CERTIFICATION DATES: None

REFERENCE STANDARDS

COMPONENT	SRM/NTRM#	CYLINDER#	CONCENTRATION
Carbon Monoxide	GMIS-1	CC-106962	505 ppm
Nitric Oxide	GMIS-1	CC-135383	251 ppm
Propane	GMIS-1	CC-20010	1013 ppm

INSTRUMENTATION

COMPONENT	MAKE/MODEL	SERIAL #	DETECTOR	CALIBRATION DATE(S)
Carbon Monoxide	Horiba VIA-510	H0002L2Y	NDIR	3/27/2007
Nitric Oxide	CAI-400-CLD	6L09004	Chemi	3/29/2007
Propane	H. Packard 6890	US00001434	GC - FID	3/13/2007

THIS STANDARD IS NIST TRACEABLE. IT WAS CERTIFIED ACCORDING TO THE EPA PROTOCOL PROCEDURES.
DO NOT USE THIS STANDARD IF THE CYLINDER PRESSURE IS LESS THAN 150 PSIG.

ANALYST: _____ **DATE:** 4/2/2007
FRED PIKULA

Tel: +1 908-252-9300 Fax: +1 908-252-0811
www.spectragases.com

Spectra Gases Inc.

3434 Route 22 West, Branchburg, New Jersey 08876 USA

ISO 9001:2000

Shipped from: 80 Industrial Drive, Alpha, NJ 08865

CERTIFICATE OF ANALYSIS

EPA PROTOCOL MIXTURE

PROCEDURE # : G1

CUSTOMER: TRC Air Measurements
SGI ORDER # : 0106190
ITEM# : 5
P.O.# : 2006603,T9WOOD

CYLINDER # : CC-94412
CYLINDER PRES: 2000 PSIG
CGA OUTLET: 660

CERTIFICATION DATE: 4/2/2007
EXPIRATION DATE: 3/30/2009

CERTIFICATION HISTORY

COMPONENT	DATE OF ASSAY	MEAN CONCENTRATION	CERTIFIED CONCENTRATION	ANALYTICAL ACCURACY
Carbon Monoxide	3/23/2007 4/2/2007	285.6 ppm 285.9 ppm	286 ppm	+/- 1%
Nitric Oxide	3/22/2007 3/30/2007	280.0 ppm 279.9 ppm	280 ppm	+/- 1%
NOx			280 ppm	Reference Value Only
Propane	3/28/2007	284 ppm	284 ppm	+/- 1%

BALANCE Nitrogen
PREVIOUS CERTIFICATION DATES: None

REFERENCE STANDARDS

COMPONENT	SRM/NTRM#	CYLINDER#	CONCENTRATION
Carbon Monoxide	GMIS-1	CC-106962	505 ppm
Nitric Oxide	NTRM-81687	CC-131062	992 ppm
Propane	GMIS-1	CC-20010	1013 ppm

INSTRUMENTATION

COMPONENT	MAKE/MODEL	SERIAL #	DETECTOR	CALIBRATION DATE(S)
Carbon Monoxide	Horiba VIA-510	H0002L2Y	NDIR	3/27/2007
Nitric Oxide	CAI-400-CLD	6L09004	Chemi	3/1/2007
Propane	H. Packard 6890	US00001434	GC - FID	3/13/2007

THIS STANDARD IS NIST TRACEABLE. IT WAS CERTIFIED ACCORDING TO THE EPA PROTOCOL PROCEDURES.
DO NOT USE THIS STANDARD IF THE CYLINDER PRESSURE IS LESS THAN 150 PSIG.

Cheryl L Patino

ANALYST: _____ **DATE:** 4/2/2007
CHERYL PATINO

Tel: +1 908-252-9300 Fax: +1 908-252-0811
www.spectragases.com

Spectra Gases Inc.

3434 Route 22 West, Branchburg, New Jersey 08876 USA

ISO 9001:2000

Shipped from: 80 Industrial Drive, Alpha, NJ 08865

RECERTIFICATION OF ANALYSIS

EPA PROTOCOL MIXTURE

PROCEDURE # : G1

CUSTOMER: Cubix Corporation
SGI ORDER # : 0096073
ITEM# : 1
P.O.# : 2006404, T-6

CYLINDER # : CC-128310
CYLINDER PRES: 1500 PSIG
CGA OUTLET: 660

CERTIFICATION DATE: 9/21/2006
EXPIRATION DATE: 9/21/2008

CERTIFICATION HISTORY

COMPONENT	DATE OF ASSAY	MEAN CONCENTRATION	CERTIFIED CONCENTRATION	ANALYTICAL ACCURACY
Sulfur Dioxide	12/30/2004 9/21/2006	15.20 ppm 15.05 ppm	15.13 ppm	+/- 1%

BALANCE Nitrogen

PREVIOUS CERTIFICATION DATES: 12/30/2004 by Spectra Gases

REFERENCE STANDARDS

COMPONENT	SRM/NTRM#	CYLINDER#	CONCENTRATION
Sulfur Dioxide	GMIS-1	CC-128528	20.07 ppm

INSTRUMENTATION

COMPONENT	MAKE/MODEL	SERIAL #	DETECTOR	CALIBRATION DATE(S)
Sulfur Dioxide	Thermo 43C	43C-70456-365	PF	9/21/2006

THIS STANDARD IS NIST TRACEABLE. IT WAS CERTIFIED ACCORDING TO THE EPA PROTOCOL PROCEDURES.
DO NOT USE THIS STANDARD IF THE CYLINDER PRESSURE IS LESS THAN 150 PSIG.

ANALYST: F. P.
FRED PIKULA

DATE: 9/21/2006

Tel: +1 908-252-9300 Fax: +1 908-252-0811
www.spectragases.com

Spectra Gases Inc.

3434 Route 22 West, Branchburg, New Jersey 08876 USA

ISO 9001:2000

Shipped from: 80 Industrial Drive, Alpha, NJ 08865

CERTIFICATE OF ANALYSIS

EPA PROTOCOL MIXTURE

PROCEDURE # : G1

CUSTOMER: TRC Air Measurements
SGI ORDER # : 100685
ITEM# : 7
P.O.# : 2006502,T9WOOD

CYLINDER # : CC-94848
CYLINDER PRES: 2000 PSIG
CGA OUTLET: 660

CERTIFICATION DATE: 12/19/2006
EXPIRATION DATE: 6/19/2007

CERTIFICATION HISTORY

COMPONENT	DATE OF ASSAY	MEAN CONCENTRATION	CERTIFIED CONCENTRATION	ANALYTICAL ACCURACY
Sulfur Dioxide	12/12/2006 12/19/2006	25.42 ppm 25.28 ppm	25.3 ppm	+/- 1%

BALANCE Nitrogen
PREVIOUS CERTIFICATION DATES: None

REFERENCE STANDARDS

COMPONENT	SRM/NTRM#	CYLINDER#	CONCENTRATION
Sulfur Dioxide	NTRM-81694	CC-162843	96.1 ppm

INSTRUMENTATION

COMPONENT	MAKE/MODEL	SERIAL #	DETECTOR	CALIBRATION DATE(S)
Sulfur Dioxide	Horiba VIA-510	851221093	NDIR	12/5/2006

THIS STANDARD IS NIST TRACEABLE. IT WAS CERTIFIED ACCORDING TO THE EPA PROTOCOL PROCEDURES.
DO NOT USE THIS STANDARD IF THE CYLINDER PRESSURE IS LESS THAN 150 PSIG.

ANALYST: _____ **DATE:** 12/19/2006
FRED PIKULA

Tel: +1 908-252-9300 Fax: +1 908-252-0811
www.spectragases.com

Spectra Gases Inc.

3434 Route 22 West, Branchburg, New Jersey 08876 USA

ISO 9001:2000

Shipped from: 80 Industrial Drive, Alpha, NJ 08865

CERTIFICATE OF ANALYSIS

EPA PROTOCOL MIXTURE

PROCEDURE # : G1

CUSTOMER: Cubix Corporation
SGI ORDER # : 0087107
ITEM# : 2
P.O.# : 2006136,T8TREY

CYLINDER # : CC-133326
CYLINDER PRES: 2000 PSIG
CGA OUTLET: 660

CERTIFICATION DATE: 3/22/2006
EXPIRATION DATE: 3/22/2008

CERTIFICATION HISTORY

COMPONENT	DATE OF ASSAY	MEAN CONCENTRATION	CERTIFIED CONCENTRATION	ANALYTICAL ACCURACY
Sulfur Dioxide	3/15/2006 3/22/2006	45.45 ppm 45.43 ppm	45.4 ppm	+/- 1%

BALANCE Nitrogen
PREVIOUS CERTIFICATION DATES: None

REFERENCE STANDARDS

COMPONENT	SRM/NTRM#	CYLINDER#	CONCENTRATION
Sulfur Dioxide	NTRM-81694	CC-162843	96.1 ppm

INSTRUMENTATION

COMPONENT	MAKE/MODEL	SERIAL #	DETECTOR	CALIBRATION DATE(S)
Sulfur Dioxide	Horiba VIA-510	851221093	NDIR	3/22/2006

THIS STANDARD IS NIST TRACEABLE. IT WAS CERTIFIED ACCORDING TO THE EPA PROTOCOL PROCEDURES.
DO NOT USE THIS STANDARD IF THE CYLINDER PRESSURE IS LESS THAN 150 PSIG.

ANALYST: _____ **DATE:** 3/22/2006
FRED PIKULA

Tel: +1 908-252-9300 Fax: +1 908-252-0811
www.spectragases.com

Spectra Gases Inc.

3434 Route 22 West, Branchburg, New Jersey 08876 USA

ISO 9001:2000

Shipped from: 80 Industrial Drive, Alpha, NJ 08865

CERTIFICATE OF ANALYSIS

EPA PROTOCOL MIXTURE

PROCEDURE # : G1

CUSTOMER: TRC Air Measurements
SGI ORDER # : 100685
ITEM# : 6
P.O.# : 2006502,T9WOOD

CYLINDER # : CC-250107
CYLINDER PRES: 2000 PSIG
CGA OUTLET: 660

CERTIFICATION DATE: 12/13/2006
EXPIRATION DATE: 6/13/2007

CERTIFICATION HISTORY

COMPONENT	DATE OF ASSAY	MEAN CONCENTRATION	CERTIFIED CONCENTRATION	ANALYTICAL ACCURACY
Nitrogen Dioxide	12/6/2006 12/13/2006	45.52 ppm 45.87 ppm	45.7 ppm	+/- 3%

BALANCE Air
PREVIOUS CERTIFICATION DATES: None

REFERENCE STANDARDS

COMPONENT	SRM/NTRM#	CYLINDER#	CONCENTRATION
Nitrogen Dioxide	NTRM-82660	CC-200753	97.6 ppm

INSTRUMENTATION

COMPONENT	MAKE/MODEL	SERIAL #	DETECTOR	CALIBRATION DATE(S)
Nitrogen Dioxide	Thermo 42i-HL	621417605	Cheml	11/27/2006

THIS STANDARD IS NIST TRACEABLE. IT WAS CERTIFIED ACCORDING TO THE EPA PROTOCOL PROCEDURES.
DO NOT USE THIS STANDARD IF THE CYLINDER PRESSURE IS LESS THAN 150 PSIG.

ANALYST: F. P.
FRED PIKULA

DATE: 12/13/2006

Tel: +1 908-252-9300 Fax: +1 908-252-0811
www.spectragases.com

Cubix Nozzle Inspection and Measurement Data Sheet

Company Name: TRC

Nozzle Number: .177 010307 1504

Measure three diameters (in inches) as shown below. Average the diameters and calculate the Nozzle area according to the calculations below.

Pre-sample Measurement

*Diameter 1 (in): 0.175 **Date:** 5/7/07

*Diameter 2 (in): 0.178

*Diameter 3 (in): 0.178

Average Diameter (in): 0.177 = (Sum of Diameters 1-3) / 3

Average Radius (in): 0.089 = Average Diameter (in) / 2

Average Radius (ft): 0.02460574 = Average Radius (in) / 12

Nozzle Area (ft2): 0.00017087 = π x radius (ft) ^2

Post-sample Measurement

*Diameter 1 (in): 0.175 **Date:** 5/19/07

*Diameter 2 (in): 0.178

*Diameter 3 (in): 0.178

Average Diameter (in): 0.177 = (Sum of Diameters 1-3) / 3

Average Radius (in): 0.089 = Average Diameter (in) / 2

Average Radius (ft): 0.02460574 = Average Radius (in) / 12 (ft)

Nozzle Area (ft2): 0.00017087 = π x radius (ft) ^2

*Maximum allowable difference between largest diameter and smallest diameter is 0.004 inches. Nozzle must be round, sharp-edged, free of nicks anc

signature

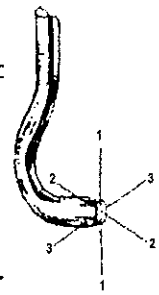

Type S Pitot Tube Inspection Form

Date: 5/7/07
Technician: Thor Olsen
Pitot Tube Number: 3044

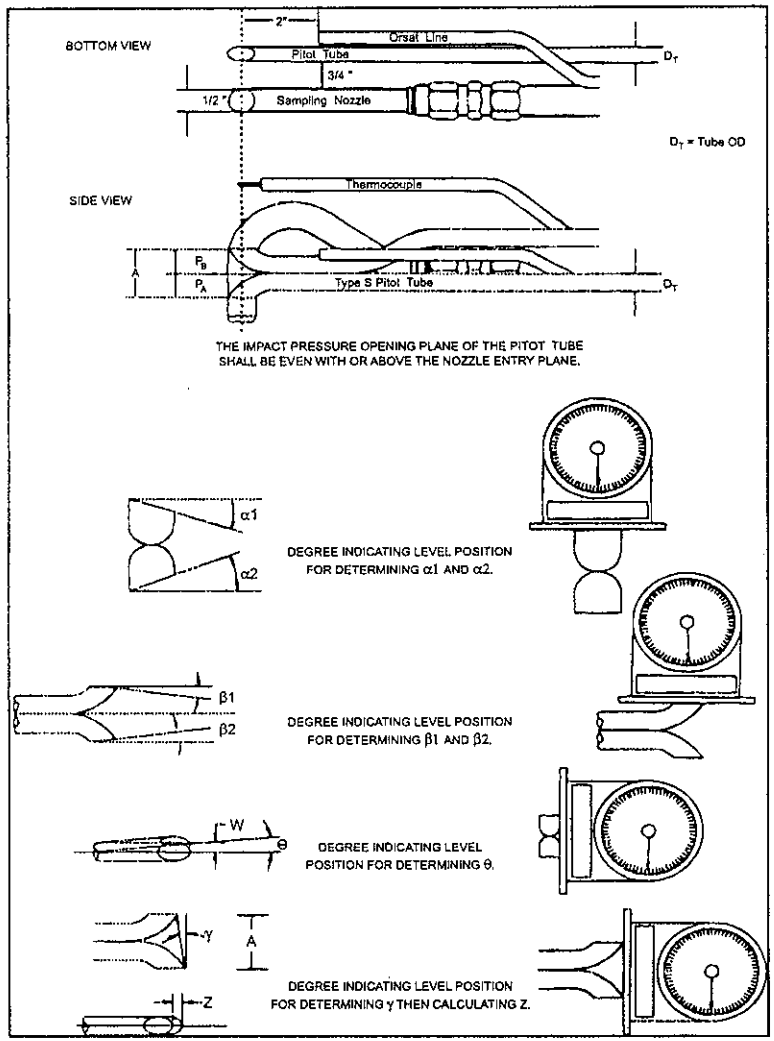

Parameter	Value	Allowable Range
Assembly Level?	Yes	Yes
Ports Damaged?	no	No
α1	0	-10° < α1 < +10°
α2	0	-10° < α2 < +10°
β1	0	-5° < β1 < +5°
β2	0	-5° < β2 < +5°
γ	0	
θ	0	
Z = A tan γ	—	Z <= 0.125"
W = A tan θ	—	W <= 0.031"
DT	0.352	0.188" to 0.375"
A	0.998	for 1/4" OD, 0.525 to 0.750" for 3/8" OD, 0.788 to 1.125"

Pitot tube correction factor of 0.84 as per 40CFR60, Appendix A, EPA Method 2.

signature

Meter Box: Orifice Full Calibration

Date:	3/13/2007
Prev. Calib. Date:	2/19/2007
Location:	TRC Austin
Technician:	TO, TB
Meter Serial No:	3477745.00
Cubix Meter Box ID	C
Atm. Pressure (corr. In	29.44 uncorrected: 29.60
Critical Vacuum + 2 in I	16 in. Hg. (required minimum)
Prev. Calib Factor (Y):	0.9759

Reference Orifice Set		Orifice (#)	K' Factor
Manufacturer:	Apex Instruments	40	0.2341
Model:	SX40-73	48	0.3418
Tested By:	QMD	55	0.4426
		63	0.6155
		73	0.7779

Orifice Serial #	K' coefficient (see above)	dH (in. H2O)	Time (min)	Vol (initial) (cu ft)	Vol (final) (cu ft)	Vol. Total (cu ft)	Initial Temperatures Inlet (deg F)	Initial Temperatures Outlet (deg F)	Final Temperatures Inlet (deg F)	Final Temperatures Outlet (deg F)	Vacuum (in Hg)	Ambient Temperature Initial (deg F)	Ambient Temperature Final (deg F)
40	0.2341	0.28	68	200.100	221.369	21.269	68	67	81	77	21	72.0	70.0
48	0.3418	0.62	32	221.700	236.496	14.796	81	77	85	81	19.5	70.0	73.5
55	0.4426	1.1	14	238.400	246.868	8.468	86	82	88	84	19	74.0	75.0
63	0.6155	2.1	19	248.100	264.027	15.927	88	84	89	86	16.5	75.0	76.0
73	0.7779	3.4	7	266.400	273.856	7.456	91	86	91	87	14.5	76.0	76.0

Meter Box Dry Gas Meter: Volume Corrected Vm (std) (cu ft)	Volume Corrected Vm (std) (liters)	Flow Rate (CFM)	Critical Orifice: Volume Corrected Vcr (std) (cu ft)	Volume Corrected Vm (std) (liters)	Dry Gas Meter Calibration Factor (Y): Value (#)	Variation (#)	Orifice Calibration Factor (dH@): Value (in H2O)	Variation (in H2O)
20.73	586.95	0.313	20.34	575.90	0.981	0.003	1.693	-0.05
14.23	402.81	0.462	13.96	395.41	0.982	0.004	1.694	-0.05
8.09	229.12	0.605	7.89	223.43	0.975	-0.003	1.785	0.04
15.21	430.63	0.838	14.88	421.30	0.978	0.000	1.763	0.02
7.12	201.51	1.065	6.92	196.08	0.973	-0.005	1.784	0.04

Meter Box

Calibration Test Results		**Pass/Fail**
*** Average Y:**	**0.9779**	***PASS***
Ave. Y w/in 5% of previous value:		*YES*
0.95 >= Y <= 1.05:		*PASS*
**** Average dH:**	**1.744**	***PASS***

Criteria:

* Y- ratio of the reading of the calibration meter (critical orifice) to the Meter Box DGM. Acceptable tolerance of individual values from the average is +/- 0.02.

** dH- the orifice differential pressure in inches of H2O that equates to 0.75 cfm of air flow at 68 F and 29.92 in Hg, acceptable tolerance of individual values from the average

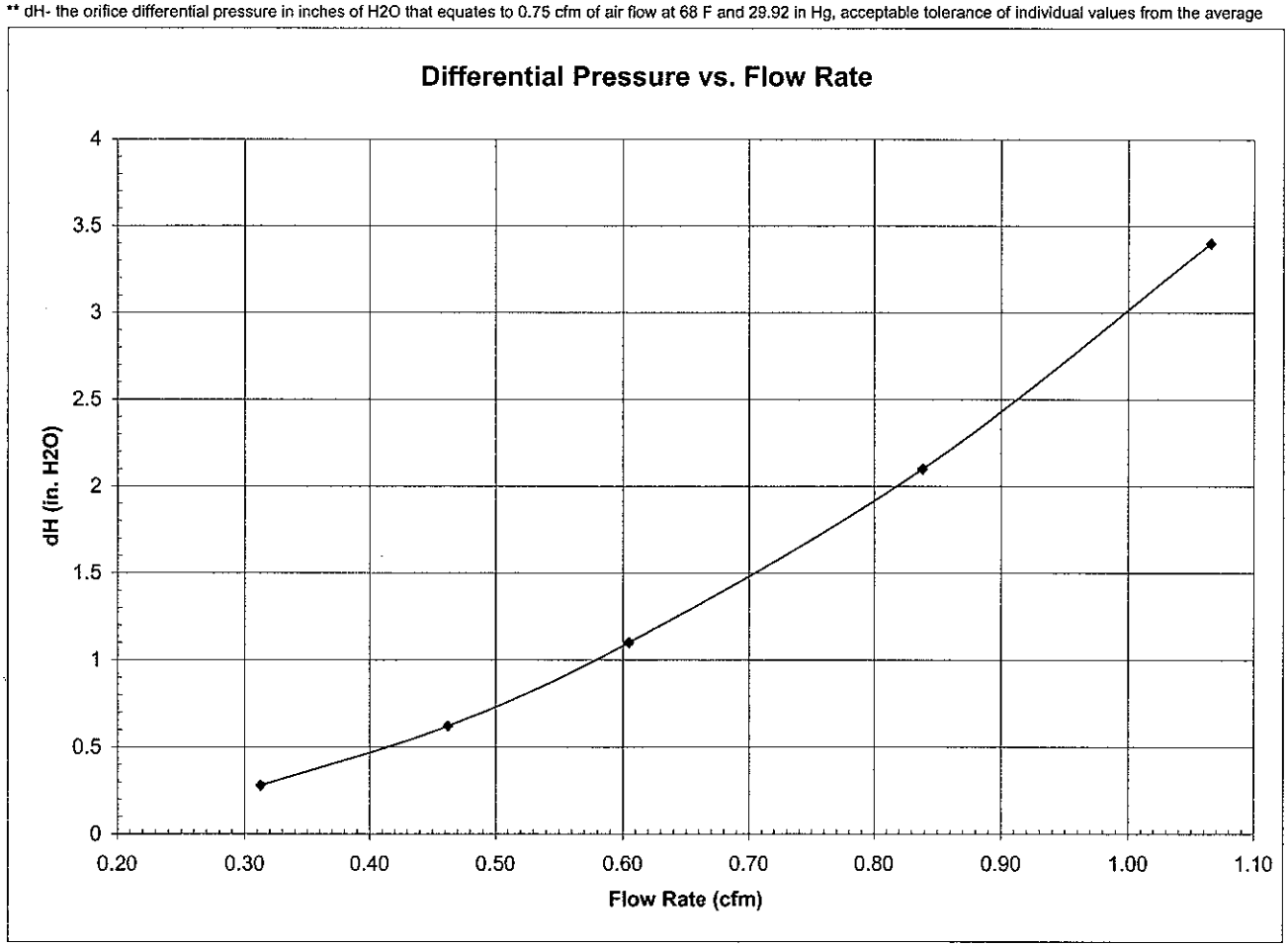

Meter Box: Orifice Full Calibration

Date:	5/22/2007
Prev. Calib. Date:	3/13/2007
Location:	TRC Austin
Technician:	TB
Meter Serial No:	3477745.00
Cubix Meter Box ID	C
Atm. Pressure (corr. In	29.25 ıcorrected: 29.42
Critical Vacuum + 2 in I	16 in. Hg. (required minimum)
Prev. Calib Factor (Y):	0.9779

Reference Orifice Set		Orifice (#)	K' Factor
Manufacturer:	Apex Instruments	40	0.2341
Model:	LA40-73	48	0.3418
Tested By:	QMD	55	0.4426
		63	0.6155
		73	0.7779

							Initial Temperatures		Final Temperatures			ımbient Temperature	
Orifice Serial #	K' coefficien (see above)	dH (in. H2O)	Time (min)	Vol (initial) (cu ft)	Vol (final) (cu ft)	Vol. Total (cu ft)	Inlet (deg F)	Outlet (deg F)	Inlet (deg F)	Outlet (deg F)	Vacuum (in Hg)	Initial (deg F)	Final (deg F)
40	0.2341	0.28	22	12.903	19.776	6.873	74	75	77	75	19	76.0	76.0
48	0.3418	0.6	18	19.777	27.995	8.218	76	75	81	78	17.5	77.0	77.0
55	0.4426	1.1	15	27.995	36.917	8.922	81	78	86	82	16	78.0	78.0
63	0.6155	2.1	17	39.387	53.419	14.032	84	82	92	86	13.5	79.0	79.0
73	0.7779	3.4	7	93.758	101.132	7.374	86	84	88	85	13.5	81.0	82.0

Meter Box Dry Gas Meter			Critical Orifice		Dry Gas Meter Calibration Factor (Y)		Orifice Calibration Factor (dH@)	
Volume Corrected Vm (std) (cu ft)	Volume Corrected Vm (std) (liters)	Flow Rate (CFM)	Volume Corrected Vcr (std) (cu ft)	Volume Corrected Vm (std) (liters)	Value (#)	Variation (#)	Value (in H2O)	Variation (in H2O)
6.63	187.74	0.312	6.51	184.25	0.981	0.000	1.733	-0.07
7.90	223.72	0.457	7.77	219.89	0.983	0.001	1.732	-0.07
8.52	241.28	0.595	8.37	237.07	0.983	0.001	1.865	0.06
13.33	377.46	0.825	13.18	373.28	0.989	0.007	1.817	0.01
7.03	199.10	1.053	6.84	193.81	0.973	-0.008	1.883	0.08

Meter Box

Calibration Test Results	**Pass/Fail**
*** Average Y: 0.9819**	***PASS***
Ave. Y w/in 5% of previous value:	*YES*
0.95 >= Y <= 1.05:	*PASS*
**** Average dH: 1.806**	***PASS***

Criteria:

* Y- ratio of the reading of the calibration meter (critical orifice) to the Meter Box DGM. Acceptable tolerance of individual values from the average is +/- 0.02.

** dH- the orifice differential pressure in inches of H2O that equates to 0.75 cfm of air flow at 68 F and 29.92 in Hg, acceptable tolerance of individual values from the aver

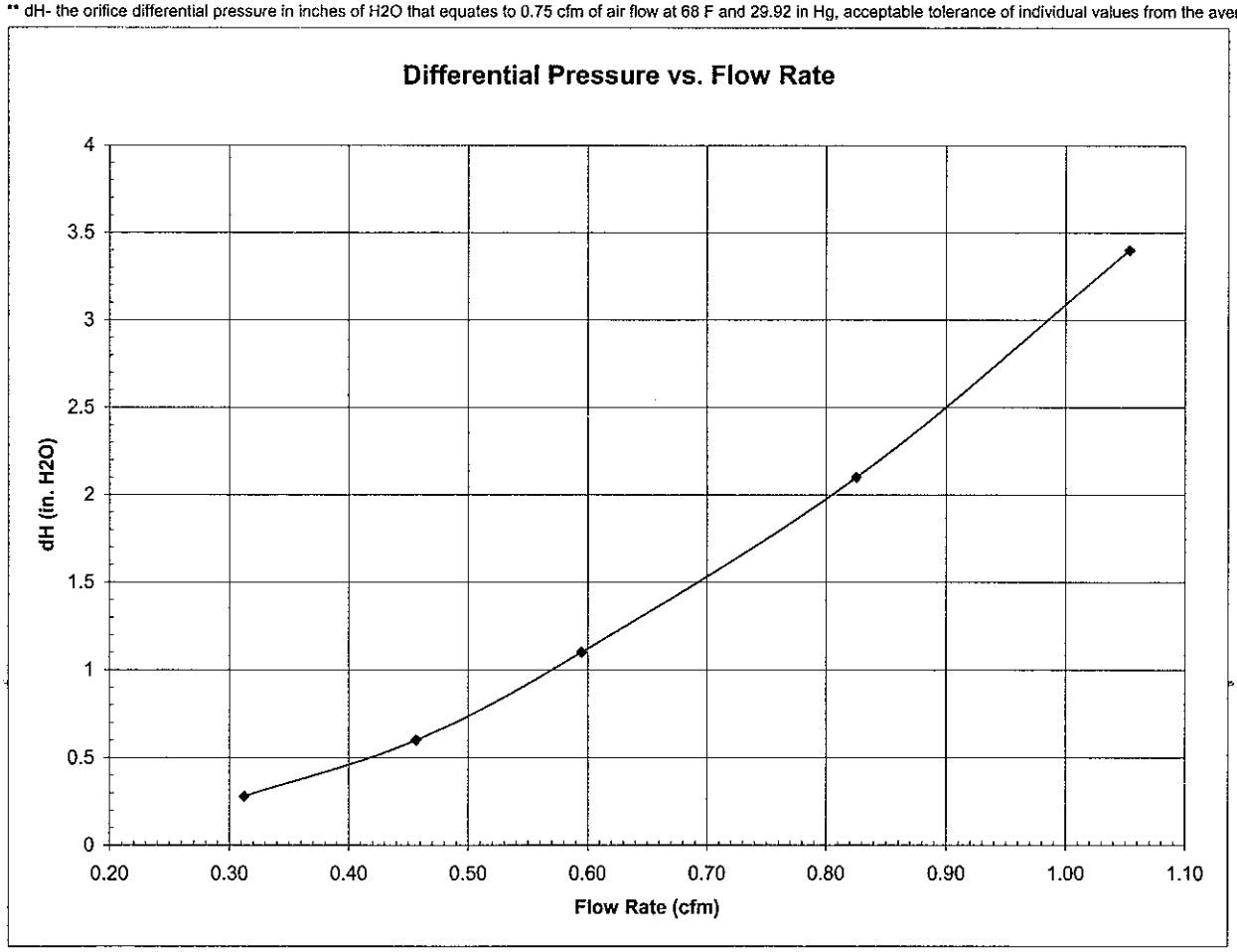

VISIBLE EMISSIONS EVALUATOR

This is to certify that

John Wood

met the specifications of Federal Reference Method 9 and qualified as a visible emissions evaluator. Maximum deviation on white and black smoke did not exceed 7.5% opacity and no single error exceeding 15% opacity was incurred during the certification test conducted by Eastern Technical Associates of Raleigh, North Carolina. This certificate is valid for six months from date of issue.

348492	Austin, Texas	February 21, 2007
Certificate Number	Location	Date of Issue

Thomas Hoel	Michael W. Lunsford
President	Director of Training