Note: This is a reference cited in *AP 42, Compilation of Air Pollutant Emission Factors, Volume I Stationary Point and Area Sources.* AP42 is located on the EPA web site at www.epa.gov/ttn/chief/ap42/

The file name refers to the reference number, the AP42 chapter and section. The file name "ref02_c01s02.pdf" would mean the reference is from AP42 chapter 1 section 2. The reference may be from a previous version of the section and no longer cited. The primary source should always be checked.

GRAPHIC ARTS
(GENERAL)
AP-42 Section 4.9
Reference Number
12

NTIS No. PB 226 [illegible]

EVALUATIONS OF EMISSIONS AND CONTROL TECHNOLOGIES IN THE GRAPHIC ARTS INDUSTRIES PHASE II: WEB OFFSET AND METAL DECORATING PROCESSES

Environmental Protection Agency
Technical Information Service
Research Triangle Park, N. C.

U.S. ENVIRONMENTAL PROTECTION AGENCY
Office of Air and Water Programs
Office of Air Quality Planning and Standards
Research Triangle Park, North Carolina 27711

APTD-1463

EVALUATIONS OF EMISSIONS AND CONTROL TECHNOLOGIES IN THE GRAPHIC ARTS INDUSTRIES PHASE II: WEB OFFSET AND METAL DECORATING PROCESSES

by

R. R. Gadomski, A. V. Gimbrone,
Mary P. David, and W. J. Green

Graphic Arts Technical Foundation
4615 Forbes Avenue
Pittsburgh, Pennsylvania 15213

Contract No. 68-02-0001

EPA Project Officer: John T. Dale

Prepared for

ENVIRONMENTAL PROTECTION AGENCY
Office of Air and Water Programs
Office of Air Quality Planning and Standards
Research Triangle Park, North Carolina 27711

May 1973

The APTD (Air Pollution Technical Data) series of reports is issued by the Office of Air Quality Planning and Standards, Office of Air and Water Programs, Environmental Protection Agency, to report technical data of interest to a limited number of readers. Copies of APTD reports are available free of charge to Federal employees, current contractors and grantees, and non-profit organizations - as supplies permit - from the Air Pollution Technical Information Center, Environmental Protection Agency, Research Triangle Park, North Carolina 27711 or may be obtained, for a nominal cost, from the National Technical Information Service, 5285 Port Royal Road, Springfield, Virginia 22151.

This report was furnished to the Environmental Protection Agency by Graphic Arts Technical Foundation, Pittsburgh, Pennsylvania, in fulfillment of Contract No. 68-02-0001. The contents of this report are reproduced herein as received from the contractor. The opinions, findings, and conclusions expressed are those of the author and not necessarily those of the Environmental Protection Agency. Mention of company or product names is not to be considered as an endorsement by the Environmental Protection Agency.

Publication No. APTD-1463

Evaluation of Emissions and Control Technologies in the Graphic Arts Industry

by

Raymond R. Gadomski
Anthony V. Gimbrone
Mary P. David
William J. Green

Phase II
Final Technical Report
Prepared Under Contract No. EPA 68-02-0001

for

Industrial Studies Branch
Applied Technology Division
Stationary Source Pollution Control Programs
Office of Air & Water Programs
Environmental Protection Agency
Research Triangle Park, N. C. 27711

May 1973

FOREWORD

This report summarizes the studies conducted by the Graphic Arts Technical Foundation for the Environmental Protection Agency, Office of Air & Water Programs, during the second phase under EPA Contract No. 68-02-0001. Previous (first phase) work was conducted under a National Air Pollution Control Administration, Department of Health, Education and Welfare Contract No. CPA-22-69-72.

The work was performed by staff members of the Environmental Control Division of the Research Department of GATF and covers the contract period between January 4, 1971 and July 4, 1972.

This report is intended to be a final one for two graphic arts processes, web offset lithography and metal decorating. It is anticipated that additional contract work will cover the remaining printing processes, letterpress, gravure, flexography and silk screen.

ACKNOWLEDGMENTS

The authors gratefully acknowledge the financial support of the Environmental Protection Agency as well as that of the industry members of the Graphic Arts Technical Foundation. On many occasions throughout the conduct of the field sampling performed under this Contract, industry members gave freely of time and facilities for which a dollar cost cannot be estimated. It was this cooperation which provided a sound basis for the conduct of the on-site field sampling studies so necessary and valuable to the study. The work upon which this report is based was performed pursuant to Contract No. EPA-68-02-0001 with the Office of Air & Water Programs, Environmental Protection Agency.

The authors wish to thank Mr. William H. Webber, Executive Director of the Graphic Arts Technical Foundation, for his support of this effort. Dr. William D. Schaeffer, Research Director of GATF, provided supervision and coordination throughout this work. In addition, he offered guidance and assistance in the review of this text.

The Air Pollution Control Advisory Committee comprising thirty-one (31) industry members (see Appendix A) is acknowledged for their technical review, assistance and support in this effort. In addition, various members of the Ad Hoc Web Heatset Committee served in a technical review capacity of the draft report and are acknowledged for their efforts.

Dr. J. J. McGovern, Head of Research Services, and Dr. Robert J. Reitz, Senior Fellow, Mellon Institute of Carnegie-Mellon University, Pittsburgh, Pa., are acknowledged for their contribution to this study. Mr. P. R. Eisaman, Fellow and Mr. V. G. Colaluca, Research Assistant of the Physical Measurements Laboratory, Mellon Institute of Carnegie-Mellon University, Pittsburgh, Pa., contributed to the analysis, data calculations, and materials handling practices associated with the field sampling program. Their diligent and conscientious efforts to the overall conduct of the analytical studies enabled the contract work to be completed as scheduled.

Mr. William H. Webber, Executive Director, Mr. James Alm, Administration Director, Dr. William D. Schaeffer, Research Director, and Mr. Raymond R. Gadomski, Project Manager, of the Graphic Arts Technical Foundation successfully coordinated the contractual and administrative procedures associated with this effort. Mr. David B. Crouse served as a consultant for the printing processes. The final report as well as the many drafts and revisions to the report was typed by Ms. Lenore Hyatt, Secretary, Environmental Control Division of the Research Department of the Foundation.

TABLE OF CONTENTS

SUMMARY 1

ABBREVIATIONS AND TERMS USED IN THIS REPORT 3

INTRODUCTION 5

PERSPECTIVE OF THE INDUSTRY 11

CONTROL THROUGH CHANGE 14

1.0 MATERIALS MODIFICATION 14
1.1 Innovative Ink Systems 14
1.11 Heat-reactive Inks 16
1.12 Photo-reactive Inks 17
1.13 Other Radiation-cured Inks 19
1.2 Research/Development/Commercialization 21
1.21 Heat-reactive (Thermally-Catalyzed) Ink 22
1.22 Photo-reactive (UV) Inks. 25
1.3 Ink Reformulation 28
1.4 Miscellaneous Materials Modification. 28
1.5 Trends 29

2.0 PROCESS MODIFICATION/CONTROL EQUIPMENT 31
2.1 Incineration 31
2.11 Energy Shortage 32
2.2 Carbon Adsorption 33
2.3 Scrubbing 33
2.4 Ozone Treatment 34
2.5 Coating Process for Web Offset 35
2.6 Electrostatic Precipitation 35

3.0 INSTRUMENTATION AND CONTROL EQUIPMENT 37

4.0 SAMPLING AND ANALYSIS OF STACK EFFLUENT FOR GRAPHIC ARTS PROCESSES . . 39
4.1 Introduction 39
4.11 Sampling 40
4.12 Analysis 42
4.2 Sampling and Analytical Technique 43
4.21 Summary 43
4.22 Summary of Stack Gas Sampler Consideration 45
4.23 Stack Gas Sampler (Figure 9, Appendix B) 45
4.24 Sampling Procedure 46
4.25 Total Sample Volume 47
4.26 Analysis of the Cylinder 48

cont'd.

Table of Contents continued

4.27 Analysis of the Trap Sample 52
4.28 Cylinder and Probe Trap Maintenance 53
4.29 Cost Analysis 54
4.3 Appraisal and Summary 58
4.4 Experimental 58
4.41 Introduction and Summary. 58
4.42 Preliminary Studies 59
4.5 Preliminary Field Studies 61
4.6 Stack Simulator Study 66
4.7 Comparison of Isokinetic Sampling With GATF Integrated Grab Sampling 67
4.71 Introduction 67
4.72 Experimental 68
4.73 Discussion of Test Results 70
4.8 Gradient Studies 71
4.9 Efficiency of Trap 74

5.0 TREATMENT OF EXPERIMENTAL SAMPLING DATA 77
5.1 Introduction 77
5.2 Data Sheets (Forms) 77
5.3 Data Sheets (Description) 77
5.31 Data Sheet #1-ECD (Source Location and Sample Background Data) . 77
5.32 Data Sheet #2-ECD (Physical and Operational Plant Data) . . . 78
5.33 Data Sheet #3-ECD (Effluent Sampling Data) 78
5.34 Data Sheet #4-ECD (Visible Emissions Evaluation) 78
5.35 Data Sheet #5-ECD (Gas Velocity Data) 78
5.5 Development of a Test Program 80
5.51 Web Offset Publication Printing Test Program 80
5.52 Metal Decorating Test Program 80
5.6 Basis for Calculations 81
5.61 Calculation of Observed Emissions 81
5.62 Calculation of Material Inputs 85
5.63 Significance of the Material Balance 87
5.7 Calculation of Control Equipment Organic Conversion Efficiency. . 87
5.8 Sample Calculations 88
5.9 Discussion of Error 90
5.91 Effluent Gas Flow Rate 90
5.92 Hydrocarbon Concentration 93
5.93 Hydrocarbon Emission Error Calculations 96
5.94 Summary of Error, Organics Emission Calculations 107

6.0 WEB OFFSET FIELD STUDIES 109
6.1 Introduction 109
6.2 Uncontrolled Sources 109
6.21 Web Offset Press Using Direct Flame Hot Air Drying 109
6.22 Web Offset Press Using High Velocity Hot Air Drying. 114

cont'd.

Table of Contents continued

6.23 Field Observations 117
6.3 Controlled Sources 118
6.31 Introduction 118
6.32 Thermal Incineration With High Velocity Hot Air Dryer 118
6.33 Thermal Incineration With Direct Flame Hot Air Dryer 122
6.34 Catalytic Incineration (1-bed) With Direct Flame Hot Air Dryer . 125
6.35 Catalytic Incineration (2-bed) With Direct Flame Hot Air Dryer . 129
6.36 Field Observations 129
6.4 Summary of Web Offset Test Results 134
6.5 Recommendations/Conclusions Based on Web Offset Field Studies . . . 148

7.0 METAL DECORATING FIELD TESTS 153
7.1 Introduction 153
7.2 Experimental Results - Uncontrolled Plants 153
7.21 Plant Test No. 2-MD (Appendix E). 153
7.22 Plant Test No. 3-MD (Appendix E). 159
7.23 Field Observations 160
7.3 Experimental Results - Controlled Plants. 161
7.31 Plant Test No. 4-MD (Appendix E). 161
7.32 Plant Test No. 5-MD (Appendix E). 167
7.33 Field Observations 172
7.4 Summary Tables 172
7.5 Conclusions/Recommendations on Metal Decorating Field Studies 183

8.0 TESTING OF BEST CONTROLLED INSTALLATIONS. 191
8.1 Introduction 191
8.2 Objectives 191
8.3 Background for Conduct of Tests 192
8.4 Test Results 193
8.41 Web Offset With Thermal Incineration [8-WO (BC) Appendix D] 193
8.42 Web Offset With Catalytic Incineration [9-WO (BC) Appendix D] 196
8.43 Metal Decorating With Catalytic Incineration [6-MD (BC) Appendix E] 197
8.44 Metal Decorating With Thermal Incineration [7-MD (BC) Appendix E] 199
8.5 Discussion of Test Results. 201
8.6 Cost Versus Effectiveness 203
8.7 Conclusion 205

BIBLIOGRAPHY 207

cont'd.

Table of Contents continued

APPENDIX A - Air Pollution Control Advisory Committee 221
APPENDIX B - Figures 225
APPENDIX C - Tables 257
APPENDIX D - Data Sheets, Web Offset Plants 269
APPENDIX E - Data Sheets, Metal Decorating Plants 385
APPENDIX F - Carnegie Mellon University, Physical 481
Measurements Laboratory Reports

SUMMARY

The initial study of the air pollution problems of the graphic arts industry* provided the information and direction for further study. Two of the major printing processes, web offset lithography and metal decorating, were examined more closely so as to more fully define and minimize the pollution potential of these processes. Web offset uses heatset inks and metal decorating employs a variety of coatings that are dried by the application of heat. Both usually are located where the concentration of hydrocarbons in the ambient air frequently exceeds the prescribed level and where restrictive legislation now exists.

An apparatus and procedure for integrated grab sampling was developed that was reliable and relatively simple, as well as the analytical technique using gas chromatography for total organic analysis. The sampling apparatus was evaluated under controlled laboratory conditions. Isokinetic sampling was conducted to determine if significant particulates (condensed organics) existed in the stack gas in amounts which would invalidate grab sampling techniques.

The testing effort was directed first to assessment of emissions from the web offset process and then to metal decorating. Uncontrolled as well as controlled sources were studied, with examples of both thermal and catalytic incineration represented in the data. The organic conversion efficiency of incineration equipment was also determined and related to operational parameters.

In web offset, the effect of press speed, ink coverage, method of drying (direct flame hot air or high velocity hot air) and type of incineration equipment on the quantity of organics emitted were determined. The contributions of paper and dryer exhaust to the total organic content of the stream were considered. Experience verified that the two major variables in the process, press speed and ink coverage, determine the quantity of organics emitted. An equation of this direct relationship was developed that has utility for predicting quantity of emissions when all parameters (process variables) are known.

Both dryer systems (direct flame hot air and high velocity hot air) served to oxidize some of the solvent vapors, with the former more effective than the latter.

For each control (incineration) unit evaluated, a temperature range was determined which produced an organic conversion efficiency of about 95 percent.

The coating and lithographic operations of the metal decorating process were studied in a manner consistent with that for web offset. The individual and net effects on organic emissions for various coatings, ink and oven combustion products were determined. The organic emissions from lithographic operations were found to be insignificant when compared to emissions from the coating operations. The major variables in the metal decorating process

*Cited in first bibliographic reference.

directly affecting organic emissions — the solvent fraction in the coating, area of the sheet coated, weight of coating or film applied and coater speed — were correlated and expressed in an equation as for web offset.

Thermal and catalytic combustion equipment installations studied were found to be effective in reducing organics. So as to characterize the effectiveness of incineration equipment in both the web offset and metal decorating operations to the maximum degree possible, four additional sources, chosen as being the most recent control installations, were studied. Thus, a total of nine installations with air pollution control equipment were evaluated.

Operational incineration temperatures for both web offset and metal decorating are indicated as being 1100°-1200°F and 700°-800°F for thermal and catalytic incineration, respectively, to achieve an organic conversion efficiency of 95 percent.

Cost information on the control units is presented and an attempt made to develop a comparison of cost versus effectiveness between the various catalytic and thermal incineration units as evaluated. A selective bibliography with review comments is presented. Efficiency curves for each system evaluated appear throughout the technical discussions.

Although this study was aimed primarily at developing data on air pollution control technology already in use by the industry (thermal or catalytic incineration), the changes being investigated within the industry, with raw materials as well as process modifications were followed to the extent possible. All information and data, mostly qualitative, made available to us is included in this report. The state of the art regarding the development and use of innovative inks presented is as current as possible.

ABBREVIATIONS AND TERMS USED IN THIS REPORT

A. Symbols

acfm	actual cubic feet per minute
Btu	British thermal unit
BC	a best controlled process
C	ratio of the observed to the calculated organics emission
^{o}C	degrees centigrade (Celsius)
1 -C	effectiveness of dryer in conversion of organic material
c.i.	catalytic incineration
cfh	cubic feet per hour
cfm	cubic feet per minute
CMUPML	Carnegie Mellon University, Physical Measurements Laboratory
$conc_{ppm}$	concentration in ppm
cu ft	cubic feet
cyl	cylinder
d.f.h.a.	direct flame hot air dryer
E_{calc}	calculated organics emission (lb C/hr)
E_{obs}	observed organics emission (lb C/hr)
$\cong$	equals approximately
^{o}F	degrees Fahrenheit
h.v.h.a.	high velocity hot air dryer
iph	impressions per hour
imp	impression
^{o}K	absolute temperature, degrees Kelvin = $^{o}C + 273.1$
lb C/hr	pound carbon per hour
lb, #	pound
MD	metal decorating plant, process or operation
mg	milligram
n.a.	information not available
n.d.	not detected
%	percentage
ppm	parts per million parts
^{o}R	absolute temperature, degrees Rankine = $^{o}F + 460$
scfm	standard cubic feet per minute at 60°F and 29.92 inches of mercury (Hg)
sq in	square inches
T, Temp.	temperature
t.i.	thermal incineration
V/V%, v/v%	volume to volume percentage
WO	web offset plant, process or operation

continued

Abbreviations and Terms Used in This Report continued

B. Terms

coated	coated paper used
litho	lithography
perfecting	printing both sides of a web
trace	a maximum of 10 ppm
uncoated	uncoated paper used
web	roll of paper to be printed
0.0000	less than one ppm; greater than n.d.

INTRODUCTION

In order to conduct a systematic national investigation aimed at evaluating air pollution generated by the printing and metal decorating industry, GATF proposed, obtained and completed a Phase I emission study entitled "Evaluations of Emissions and Control Technologies in the Graphic Arts Industries," Contract No. CPA-22-69-72, with the National Air Pollution Control Administration (NAPCA), CPE, Public Health Service, Department of Health, Education and Welfare. The contract, awarded April 28, 1969, culminated in a Final Report in August 1970. The report may be obtained for a nominal cost, from the National Technical Information Service under the publication number PB 195-770.

So as to provide a logical and uninterrupted extension of the work completed in Phase I, technical proposals covering Phase II were submitted early in 1970 to the Environmental Protection Agency. The original proposed technical program had to be reduced in several areas because of limited funds. The revised proposal was accepted and the Foundation awarded a cost reimbursement contract on January 4, 1971. The contract awarded consisted of a period of performance of twelve months encompassing a four-task project (Figure 1, Appendix B). Essentially the work to be performed in the various tasks was as follows:

Task 1 - Maintain Perspective and Awareness

Continue the study initiated in Phase I to provide the necessary information and background as to developments in related fields that can influence the course of Phase II and subsequent efforts.

The results will provide current awareness of new and revised air pollution legislation; modified and new sampling and analytical instrumentation (continuous and automated techniques are of prime interest); changing and evolutionary raw material modifications (inclusive of new drying system) with the graphic arts industry and its suppliers; improved concepts in air pollution control equipment; availability and effectiveness in processes; and generally to gather information required for project planning and execution.

Task 2 - Familiarization with Field Testing Equipment

Perform measurements at local printing and metal decorating plants to provide field testing personnel with experience in source testing equipment. Mass flow rates based on stack dimensions and gas velocities, temperature and pressure measurement will be made. Sampling apparatus designed and developed in Phase I will be used to obtain stack effluents which will be analyzed according to procedures adopted as a result of Phase I investigations.

Task 3 - Web Offset Source Tests/Evaluation

Only continuous, or web offset, lithographic processes using heatset inks will be studied in this task. At least one direct flame plus hot air dryer and one high velocity hot air dryer will be included for study in this task. Also, one of the processes studied should have catalytic combustion and one should have thermal oxidation type of APC equipment. Some of the operations sampled may not have air pollution control equipment. This work will proceed as follows:

a. Contact appropriate companies to arrange visit schedule and site preparation.

b. Obtain samples as in Task 2, above. Sample and analyze exhaust gases. Take plant operating data and exhaust gas mass flow rate. Observe smoke density and odor character at the point of emission. Analyze gas samples.

c. Tabulate data from each plant visit.

d. Calculate emission factors for each process studied. Data on ink and paper usage rate; type of paper and dryer operating temperature are necessary to obtain an adequate basis for correlation among plants.

e. Evaluate control techniques. From field sampling data determine the effectiveness of present control equipment for the dryer/incinerator systems studied.

Task 4 - Metal Decorating Source Tests/Evaluation

Operations in this category are limited to sheet-fed coating operations where most of the effluent is from materials which dry by solvent release and are applied by roller coaters.

Comparatively little effluent is attributable to the high solids ink used and the product is dried or polymerized in ovens using relatively long retention times. An adequate number of plants will be visited to obtain representative data on operations based on typical coatings and lacquers. At least one thermal and one catalytic combustion incinerator will be studied. The work will proceed as follows:

a. Contact appropriate companies to arrange visit schedule and site preparation.

b. Obtain samples. In the field, obtain samples of exhaust gases from both oven and air pollution control equipment. Take plant operating data and exhaust gas flow rates, pressures, and temperatures. If possible, observe approximate Ringlemann number, odor intensity and character at point of exit to atmosphere. Analyze exhaust gases according to methods developed in Phase I.

c. Tabulate data from each plant visit.

d. Calculate emission factors using all the field sampling data; calculate emission factors for the various types of coatings tested.

e. Evaluate control techniques. From field sampling data determine the effectiveness of present control equipment for the dryer/incinerator systems studied.

Phase II had two specified goals initially. The first was to acquire familiarity with the sampling and analytical techniques recommended in Phase I and then to characterize the emissions from the web offset and metal decorating operations. These processes had been chosen because they possess the greatest potential for air pollution among the graphic arts processes. Neither appeared to be amenable to solvent recovery because the high temperatures in the dryer were likely to produce chemical modification of the solvents. The second objective was to determine the effectiveness of air pollution control equipment presently installed on these printing operations, using the sampling and analytical technique developed in Phase I and further refined in Phase II.

Contract Modifications

During the first six months of the contract, five modifications were made. In February the time was extended 30 days to allow for preparation of a draft of the final technical report (Modification No. 1).

As a result of problems encountered during the preliminary field testing of both the metal decorating and web offset processes performed under Task 2, some modifications were deemed necessary by the EPA project officer. These included laboratory tests on the sampling equipment to determine 1) what sampling procedures should be followed to insure proper sampler operation and 2) the accuracy of the analytical method being used. This additional effort (Modification No. 2) and commensurate financial support (Modification No. 3) were supplied accordingly.

Also during the period assigned for work under Task 2, EPA discussed with the Foundation various aspects of the Clean Air Amendments of 1970. EPA is responsible for obtaining emission data from plants, using the best known control equipment, with the purpose of establishing standards of performance for new stationary sources. Since standards of performance for new sources may be required for the graphic arts industry, it was logical that some data be obtained under the current contract work which could be used for that purpose. Thus, the Foundation submitted a technical proposal to EPA for additional work to be performed under the existing contract. As a result, Modifications Nos. 4 and 5 extended the existing contract to 15 months (inclusive of a final technical report) and created Task 5, "Source Testing of Best Controlled Processes." The work to be completed in Task 5 is outlined as follows:

Task 5 - Source Testing of Best Controlled Processes

To further characterize the effectiveness of control equipment in both web offset and metal decorating operations, four additional sources shall be studied. (Here the work "source" means any combination of press, dryer and incinerator; hence, a single plant may contain several sources.) These sources shall include: 1) web offset press with thermal incineration; 2) web offset press with catalytic incineration; 3) metal decorating operation with thermal incineration; 4) metal decorating operation with catalytic incineration.

Procedure. Contact appropriate companies to arrange visit schedule and site preparation. Obtain EPA agreement that the selected source is a "best" controlled process.

Obtain Samples. Take plant operating data prior to and during the test and measure exhaust gas flow rates, pressures and temperatures throughout the testing period. Obtain samples of exhaust gases prior to the inlet of the control equipment and at the outlet. Analyze the exhaust gases according to the presently developed method of analysis.

Tabulate Data from Each Source Test. Perform necessary calculations to provide data that can be used to evaluate the control techniques being used.

Shown in Figure 2 (Appendix B) is the Phase II Air Pollution Program complete with contract modifications Nos. 1 through 5 as discussed previously in this section. Figure 2 (Appendix B) also depicts each task divided into specific sub-tasks. For administrative as well as cost purposes, Task 1 was to continue for the duration of the contract while three months were allotted for Task 2. Tasks 3 and 4 were allotted 4-1/2 months each, and Task 5 two months of project time. As indicated earlier, all task effort would be followed by preparation of the final report.

In the course of Task 2 work, problems occurred with the sampling and analytical work which could not be foreseen when time estimations were made for the work. Consequently, Modification No. 6 essentially provided for four additional contract months to satisfactorily complete this segment of the contract. As a result, Modification No. 6 extended the contract to 19 months from the effective date of the contract of January 4, 1971 to August 4, 1972 (inclusive of the preparation time of a draft final technical report.) A final modification was made which extended the contract to 26 months and provided additional financial support (Modification No. 7). This was required because final reporting, reviewing and redrafting required longer than anticipated and the completion of all required work items entailed higher costs than planned.

In summary, the scope of research and technological activity as stated in Contract No. 68-02-0001 entitled "Evaluations of Emissions and Control Technologies in the Graphic Arts Industry" represents a continuation of the efforts initiated in Phase I of a 1969 contract (NAPCA CPA 22-69-72). The Graphic

Arts Technical Foundation through cooperation and financial support of the Office of Air & Water Programs, Environmental Protection Agency, has utilized the accomplishments and results of the initial study to examine more closely two printing processes, namely web offset lithography which uses heatset inks and metal decorating which employs coatings, to measure emissions from these processes and determine the effectiveness of existing air pollution control systems.

With the program oriented toward those specific areas in greatest need, and timed to provide the necessary data, the goals of Phase II were: 1) continued awareness of the legal and technical aspects of emission control to include continual survey of research disclosures in the literature and the screening of commercial developments in air pollution control equipment as well as materials modification such as innovations in ink systems; 2) a preliminary effort at obtaining samples of effluent from a metal decorating and web offset process in order to insure that the proposed sampling and analytical techniques are both suitable and reliable for obtaining data on the type of emission encountered with these processes; 3) the conduct of laboratory tests on the sampling apparatus as developed to insure reliability of the sampling method as well as the accuracy of the method of analysis; 4) on-site field sampling and analysis of emissions from web offset and metal decorating process conducted to the extent needed to characterize effluents with respect to processes and product, and within defined capabilities, the establishment of emission factors based on the process-material-product orientation as studied; 5) a determination of the efficiency of air pollution equipment installed on web offset and metal decorating processes according to the analysis of gases as they enter and leave the equipment; 6) the further characterization of the effectiveness of control equipment in both web offset and metal decorating operations considered as best controlled processes.

PERSPECTIVE OF THE INDUSTRY

The report submitted on the Phase I contract (1) presented an in-depth perspective of the industry in the manufacturing community including its rank in value added to the Gross National Product, employment figures, distribution of establishments according to geography, size and printing process(es) involved, dollar value of shipments and other similar data. No substantial changes have taken place in the interim and the statistics (primarily 1967 Census of Manufactures) included in that report can still be considered valid representation. Accordingly, there is no need to present here a detailed discussion of the status of the printing industry in the manufacturing community. However, a few remarks are in order relative to the specifics of the contract here reported upon.

According to recent government statistics (2) commercial lithographic printing (SIC 2752) experienced a 9.9 percent annual growth throughout the 1960's, exceeding that of all other printing and publishing activities. Approximately ten percent of magazines are printed by lithography, 75 to 80 percent of which is by the web-fed process. Ten years ago, only 60 percent of the magazines printed by offset lithography was done by web. The trend is expected to continue, but letterpress continues to dominate in periodicals printing.

Lithography and letterpress (SIC 2751) continue to account for approximately 90 percent of the $9.2 billion commercial printing market, with lithography's share steadily increasing, from 47 percent to an expected 53 percent for the five-year period 1967 to 1972. New York City, Chicago, Los Angeles and Philadelphia continue to be the major commercial printing production areas.

The total value of shipments of the entire printing and publishing industry (15 individual industries are included in SIC 27) is expected to reach $28 billion for 1972, representing approximately a 15 percent increase over 1969.

As reported earlier (1) metal decorating, classified by the U. S. Department of Commerce as a product of the metal can industry (SIC 3411), is considered by both printers and metal decorators to be a segment of the printing industry. Its economic performance has followed earlier predictions with $4.3 billion value of shipments realized for 1971 and $4.6 billion expected for 1972 (3). The metal can industry consists of over 100 companies operating approximately 300 plants, with the four largest companies accounting for 73 percent of the total can production. According to statistics taken from a recently published marketing guide to the packaging industries and published in the trade press (4), the sale of metal cans is expected to grow at an average annual rate of 6.6 percent to 1980.

In addition to statistics, the status of the commercial printing industry and projections for the next ten years are expressed in the recent remarks of one of the industry's most respected consultants (5). "It will still be many years

before the industry will resolve itself into more professionally managed companies that recognize the value of research and education and are prepared to pay for them, and fewer job shops that cannot afford these services and have to depend on others to supply them... The primary changes will be in technology rather than the products... Materials will change also, with radiation sensitive inks dominating the litho field, and water-base inks and mircrowave dryers satisfying gravure's needs for pollution-free printing... Pollution will not be as great a problem because by the time the printer makes the switch to web offset, radiation sensitive inks will be in widespread use... commercial printers will gain the advantages of developments made for other printers without incurring the displeasure of civic groups and facing litigation from civil authorities."

Driography. A milestone in commercial lithography was reached in 1970 with the development of a new printing plate which imparts selective ink receptivity to the planographic (plate) surface without the use of water. Introduction of this new process does not affect the solvent-ink-emission problem; but it is now an established commercial process — in small to medium size runs — and properly deserves mention in the present status of the lithographic offset process. It is expected that, as the special inks suitable for the process are refined further, "driography can command an appreciable share of the planographic printing market, which will represent the bulk of commercial printing in the next ten years" (5).

The Industry and the Clean Air Amendments of 1970. As implementation of the 1970 amendments to the Clean Air Act proceeded through 1971 and 1972, the entire industrial community became increasingly aware of and individually involved with the timely subject of responsibility for the quality of the environment. The graphic arts industry is no exception. All 50 states are equally responsible for attaining the national ambient air quality standards established for six pollutants: sulfur oxides, particular matter, carbon monoxide, nitrogen oxides, photochemical oxidants and hydrocarbons. Although each state is equally liable, the severity of the problem is not equally distributed. Accordingly, the extent and type of state (and ultimately local) activity required is determined by the quality of the air under existing circumstances. As a result, restrictions placed on industry are governed by those pollutants and their concentrations in a given area. As steps are taken below the federal level in order to accomplish the standards, emission sources become targets for control and involvement on an individual basis becomes a reality.

Each state was required to submit to the Environmental Protection Agency (EPA) its plan for accomplishing the standards that have been established. In order that plans submitted by the states would be likely to be approved in a minimum length of time, EPA, in April 1971, published proposed regulations and guidelines for the states to follow in formulating their implementation plans.

During the period provided for consideration and public comment, a total of more than 400 interested parties — government agencies at all levels, citizen groups, commercial and industrial organizations — were heard from. Although the nature of complaints was diverse, the most general adverse criticism was embodied in the statement that the proposed regulations spelled out in the most minute detail the scope, limitations and provisions of state implementation plans in conflict with the Clean Air Act and the intent of Congress that "each state shall have the primary responsibility for assuring air quality within the entire geographic area comprising such state..."

After extensive evaluation of all considerations for revision, the final guidelines promulgation took place in August 1971, six to eight weeks later than expected.

In the period from August 1971 to January 30, 1972 when all state plans were due, activity in and among the states was indicative of whatwould be required eventually of industry. Most states found it necessary to enact new legislation, or at least modify regulations in existing legislation, so as to comply with the provisions of the Act. In the months that followed, during which EPA was reviewing plans, and since June 1, when EPA made announcement of its initial approvals and disapprovals, administrative and legislative activity within state regulatory agencies and with the public has continued to be vigorous.

The net result of all the laws and regulations that now exist throughout the country is that many segments of the graphic arts industry, as expected, will be extensively affected by restrictions imposed on hydrocarbon emissions from stationary sources. Other regulations will have little, if any, impact.

The industry is highly concentrated in densely populated urban areas, where the incidence of Priority I (photochemical oxidants) areas of Air Quality Regions is greatest. Over half of all commercial printing is performed in Illinois, New York, Pennsylvania and California (1), each containing at least one such Priority I area. Major centers for printing and metal decorating also are located in Ohio, Maryland, Indiana, Missouri and Wisconsin, — states with Priority I areas. Not all will be able to attain and maintain hydrocarbon standards by control of mobile sources.

At present, hydrocarbon emission regulations are in effect, have been adopted or are in the process of being adopted for most of the important graphic arts centers: coastal areas of California, and some, if not all, of the Priority I areas of Ohio, Illinois, Indiana, Maryland, New York, Pennsylvania and Wisconsin. (Although not enacted by the state of Pennsylvania, Philadelphia's Regulation V has the same effect on industry as state law applicable to a designated area of the state.) Connecticut, Kentucky, North Carolina and Virginia regulations will affect many, although fewer, members of the industry. The effect of regulations in Arizona, Alabama, Louisiana and Oklahoma will be scattered and minimal.

Solid particulate does not pose a problem, but most printers, as most of all of industry, are affected by plume opacity being restricted to 20 percent or less nationwide; and the ubiquitous odor problem possibilities may plague many, irrespective of location.

Members of the graphic arts industries should experience little or no difficulty in complying with the standards for carbon monoxide, nitrogen oxides and sulfur oxides.

Carbon monoxide is not normally recognized or observed as a significant product (45-50 ppm) of controlled drying ovens or incineration equipment (6). However, a plant may be required to check for this contaminant infrequently or under certain circumstances.

Nitrogen oxides emission may present a problem for some printing plants. The experience of the Foundation in evaluating emissions from thermal incineration equipment (included elsewhere in this report) indicated that a temperature of 1100°-1200°F was required to achieve an organic conversion efficiency of 95 percent. In both instances where the effluent in this temperature range was examined for nitrogen oxides, tests were positive, as measured by the length-of-stain method. With catalytic combustion, 95 percent conversion of organics was achieved at temperatures in the range of 700°-800°F and no nitrogen oxides were detected.

No equipment or process found in a printing or metal decorating plant at the present time is capable of emitting sulfur oxides, with the possible exception of the source of heat to the plant. This pollutant is not a potential process emission.

CONTROL THROUGH CHANGE

Whenever possible, a preferred control approach is to eliminate air contamination by prevention rather than correction. Effort expended before the fact — preservation — can be more rewarding, if only esthetically, than that required after the fact — restoration. The latter implies that the manufacture of a salable commodity becomes the product of two distinct and diverse processes, where formerly only one direct procedure was required. It follows that ultimately, if not immediately, the value of an ounce of prevention being equal to a pound of cure will become an economic fact.

The printing process is amenable to the "prevention" approach, and appropriately is being pursued. Both restoration and preservation measures are discussed in the three sections that follow.

1.0 MATERIALS MODIFICATION

1.1 Innovative Ink Systems

Except for news ink which never really does dry (vehicle is absorbed by newsprint), inks traditionally dry by a combination of absorption of one or more components by the paper, chemical oxidation of unsaturated oils catalyzed by heavy metal salts of organic acids

(conventional for sheet-fed operations) and solvent removal by evaporation at slightly elevated or room temperatures. Although such inks do not dry for several hours, they set rapidly and, with the assistance of spray powders to protect the printed film, allow satisfactory over-printing through successive units as in multicolor work. However, they are not acceptable for high speed web operations in letterpress and offset. These relatively recent processes require an ink that will dry in a second or less. Heatset inks were developed to fill this need.

Heatset inks contain varnishes made by solubilizing solid resins in high-boiling hydrocarbon solvents and are dried by rapidly removing the solvent as the paper web passes through a dryer at elevated temperatures sometimes as high as 400-500°F. Thus, the drying of heatset inks is a physical process rather than chemical, although some thermal degradation, principally of ink and paper components, does occur.

The use of these heatset inks makes possible the printing of webs effectively, but they also impose limits on high speed web operations. The practical length of dryers approaches a maximum and the use of lower-boiling solvents allows solvent evaporation at the press, resulting in ink viscosity control problems.

These considerations furnished the incentive for the study of instantaneous reactions to convert liquids to solids. For several years ink manufacturers sought more economical means of printing with high-speed presses. To put solvent into an ink before printing and promptly remove it — by a costly process — was expedient, but not the answer (7). A typical conventional heatset ink such as is used for letterpress or offset printing may contain 35 to 45 percent of petroleum hydrocarbon solvent blends in the high boiling range of 450 to 550°F (230-290°C) (8). When the imprinted ink film is heated in the press oven, the solvent is rapidly flashed off through the oven stack to the atmosphere.

Since late 1969, announcements have been forthcoming from printing ink manufacturers concerning the availability, subsequent field testing and commercial use of "innovative inks." This designation may be used to include all the recent accomplishments in ink technology for high-speed printing by the web-fed processes, from the relatively simple reformulation to reduce or eliminate photochemically reactive and odorous solvents, to the most sophisticated systems presently available commercially, those cured by ultraviolet light and completely solventless.

Emerging from the research and development stage at a time when protection and restoration of our environment is of maximum concern, the new ink systems are designed to be consistent with restrictive legislation on emissions of solvents and other organic material from stationary sources. Some inks that have been reformulated to eliminate odor

and certain solvents probably owe their existence primarily to the establishment of air quality standards. Highly refined deodorized solvents were developed some time ago for printing on materials for use on packaging for food products. Other inks, however, have resulted from long-term research conducted to improve several ink qualities, including drying characteristics, to be compatible with increased press speeds and a wide variety of papers and other substrates. Undoubtedly, atmospheric pollution problems furnished impetus to the research, but such considerations were not the initial motivating force.

New inks that represent scientific and technological advancement beyond solvent reformulation of conventional heatset inks are emphasized in the sections that follow. The thermally-catalyzed single and two-component (heat-reactive) systems and the ultraviolet sensitive (photo-reactive) systems developed have progressed to commercial feasibility and installation in the United States, and are at present receiving the maximum attention, consideration and publicity. (Some references to work abroad are included in the bibliography.)

Other innovative inks are dried by microwave, electron beam and radio frequency energy. These are not at present receiving commercial application consideration in this country.

1.11 Heat-reactive Inks

Thermally reactive catalyzed inks have become known as "thermoset" and "catalytic" inks, but more properly should be called "heat-reactive." Presumably, no confusion with heatset inks (which dry by solvent removal at elevated temperatures) has resulted.

Both single and two-component systems contain a prepolymer, a cross-linking resin and a catalyst. The catalyst becomes active when heated to a temperature of 300-350°F in the dryer and rapidly converts the liquid into a solid polymeric film via condensation polymerization reaction. The web is cooled as it passes over chill rollers to approximately 90°F (32°C). The reaction byproducts (10-15 percent of that from a conventional system) are principally C_1-C_4 alcohols, moisture, and in certain cases small amounts of formaldehyde, thus precluding condensate buildup in the dryer. The overall volatile content of such inks is 20 percent or less of that of a conventional heatset ink, the smoking tendency is nil, and stack odor level is said to be reduced to about one-tenth of that from a conventional heatset ink (5, 7, 9).

Systems for web operations in both letterpress and offset have been developed because of the need for water insensitivity in the lithographic vehicle. In addition, since there is little liquid vaporizing during the reaction (ink drying), the resultant films (printed solids)

a costly high-pressure UV lamp system (conventional dryers are useless). On existing sheet-fed equipment the available space for these installations is lacking (or less than optimum) and physical interference between energy source and the imprinted sheet inhibits drying. The temperature rise of press components due to convective and radiation heating can limit the time the press is run continuously. Web-fed presses can utilize space where heaters currently are installed. A variation of UV-cure called UV-set has been developed for sheet-fed operations (see Section 1.22).

At present the drying efficiency of high pressure mercury vapor lamps drops gradually after about 1000 hours and so have a maximum life expectancy of 1500-2000 hours depending upon the ratio of time off to time on. Several lamps, costing about 7.5 cents per hour per lamp, are necessary for each press (13).

A recently published Foundation report (14) presented a model for analysis of the economic considerations in evaluating the installation of UV drying systems on both web and sheet-fed lithographic processes. Each judgment must be made as an individual case.

Economic considerations (14, 15) comprise only a portion of the disadvantages of the use of UV-cured inks. Hazards to the health and safety of personnel also exist. Operators must be protected from ultraviolet radiation, both direct and reflected, since either can damage the retina of the eye, and from ozone that is formed during warm-up periods by the action of ultraviolet light on oxygen. The need for retraining of operators also is obvious.

Regardless of the sizable capital investment involved in order to use UV inks, as well as other considerations, the attitude of several ink manufacturers is that these are the inks of the future and will dominate web offset for printing on coated papers before the end of the decade. Should such become reality, the heat-reactive inks would serve as interim inks until presses are equipped with UV energy sources. Others, however, feel that the use of solventless inks (all species) represents, essentially, another way of printing and that progress will be evolutionary rather than revolutionary (16).

1.13 Other Radiation-cured Inks

As indicated earlier, innovative inks which are dried by microwave, electron beam and radio frequency are not at present receiving commercial application consideration, at least in this country. However, the ink industry is looking at all non-conventional drying methods. One major ink maker to date has claimed a limited measure of success in formulating a web offset ink for microwave drying (17). The company feels, however, that additional work must be done before these inks would be ready for commercial use. (Coatings for plywood and certain automobile bodies are being cured by the electron beam technique.)

The principles of these radiation curing systems are discussed briefly here.

Microwave. Microwaves are used industrially in such applications as evaporating solvents in the manufacture of pharmaceuticals, curing resins in foundry molds, cooking foods; and have been proposed for drying paper webs. In the United Kingdom (18), microwave drying captured the imagination of printers to the point that the principle became popular when discussing new ink drying and processing techniques. (However, at least one unit has been removed from a commercial plant where trials were made.)

Water and other polar liquids, (alcohols, ketones and esters are some) can be heated efficiently by microwaves. Polar solvents tend to become oriented in the direction of a magnetic field. As energy is absorbed, the rapidly alternating field causes molecular motion generating heat which volatilizes solvent, promotes oxidative drying, evaporation, etc. Specially formulated inks absorb most of the energy passing through the imprinted paper, thus allowing not only efficient drying of the ink film but also the paper to be little affected by the heat generated.

Although solvent-free systems for microwave drying are, to our knowledge, not available, much developmental work is reported to be in progress abroad, primarily in Europe and Japan (18, 19). Solvents which are vaporized suffer little or no degradation, and if adsorbed or otherwise trapped (and recovered, if desired) are not contaminated with products of partial oxidation. The temperature of the exit gases is much lower than from a gas-fired burner. The conservation of one of our natural resources — natural gas — is obvious.

As with other innovative inks, special formulations are necessary and equipment costs are very high (20). Maintenance must be performed by an operator skilled in microwave equipment. Metal substrates present a problem because they reflect the waves back to the applicator (energy source) and damage it. Microwaves are a potential health hazard should leakage occur. (The Department of HEW has issued a standard (21) limiting microwave radiation emission from cooking ovens.) Microwave drying is said to have its widest possible application at present in gravure and flexography, and offers a means of using extensively water-base gravure inks on plastic substrates (22, 23). However, even some of those enthusiastic about these possibilities, anticipate that acceptance of such a system is some time away.

In lithography, microwave energy has been tried in high speed web printing and on sheet-fed carton board. The web offset trial, a temporary installation in England at a newspaper plant, had limited success, partially attributed to the fact that "responsive" inks were not very well developed at that time (1967). Commercial trials in Europe with microwave units for drying ink on cartons (presumably by gravure)

have been sufficiently successful that several large European converters reportedly have installed such dryers (18). Microwave appears to have no application in web offset drying (23) principally because the polar solvents are incompatible with the litho process.

Radio Frequency. The principle of using radio frequency energy to heat and so dry or cure an ink film is essentially the same as that for microwave. Radio and television frequencies are adjacent to microwave on the electromagnetic spectrum. The difference is one of frequency range. Some researchers have stated that utilization of radio energy is more efficient than microwave (24), thus affording an advantage to drying by radio frequency. One pilot plant trial with a water-base gravure ink and similar production conditions required twice as long to dry as with high velocity air heaters, but only one-tenth the energy (25). They advocated a combination of hot air and radio frequency for maximum efficiency.

Electron Beam (13). Energy in the form of a beam of electrons may be used to "dry" or "cure" an ink film. The reaction is one of free-radical polymerization with the electrons as the free-radical initiators to promote crosslinking and so curing. The number of free radicals created is large and the reaction is rapid. The cure is effected at low (room) temperature and no solvents are required (the monomers are liquid). Because no catalytic agent is contained in the reaction mixture, the ink has a long shelf life and good press stability.

However, there are many serious disadvantages and/or deficiencies to the use of this system for ink drying, some of which are the loss of tear and tensile strength of paper by the dosage required to cure existing coatings, and the need for development of new inks curable at an energy dosage not deleterious to paper. (The effect on paper prompted one writer to say that the future of electron beam lies in the metal decorating field.) In addition, X-rays, generated when the beam strikes the target, necessitate elaborate and expensive operator protection, and printed waste cannot be recovered by traditional de-inking processes.

1.2 Research/Development/Commercialization

As mentioned in Section 1.1, ink manufacturers have been seeking to replace heatset inks, or at least provide alternate methods of utilizing the capabilities of the high-speed printing presses. The results of their research and development activity progressed to commercial availability of several heat-reactive catalytic inks (and limited use) during 1969 and 1970 (26-38). Success had been realized earlier with catalytic inks in the letterpress process, but the use of water in lithography precluded applicability of the initial ink systems interchangeably. At present, catalytic systems for web operations in both letterpress and offset lithography are available.

During the late months of 1970, announcements were made of field testing with the photo-reactive inks cured by ultraviolet light with projections for commercial installation during 1971 (39).

The use of ultraviolet light to dry ink is not new (12). As far back as 1944, several ink companies received patents on the concept, but results achieved on commercial equipment were poor and research programs were terminated. The original inks were composed of drying oils such as tung and linseed, and the mechanism for curing was by ozone absorption rather than rapid polymerization of the vehicle. UV radiation across an air gap produced ozone which dried the ink film in the same manner as conventional (oxidative drying) ink, except that the agent was ozone rather than oxygen. A more sophisticated approach (by a press manufacturer) in the late fifties also failed to reach commercialization. The present work, initiated in 1961, was motivated by the need to eliminate the solvents from ink and improve the over-all efficiency and quality of printing. These goals could be achieved only by the development of radically new techniques.

Ink companies known to have developed and on the market heat-reactive and/or photo-reactive (UV) inks are identified below. Pertinent information and data included were furnished primarily directly from each company, from notes in the trade press resulting from company news releases, or presentations by company representatives.

Additional companies were included in some of the early publicity as having developed heat-reactive inks. However, progress to the point of commercial availability and acceptance presumably has not been accomplished. Current comment in the trade press is that all ink companies are devoting a major portion of their effort to innovative inks and that most, if not all, will be marketing at least one type in the not too distant future.

1.21 Heat-reactive (Thermally-Catalyzed) Inks

Bowers Printing Ink Company introduced "Crystal-Aire" inks in 1969 after five years work (27, 28). Initial testing on production jobs took place in the Los Angeles area and presumably this ink is being used primarily in west coast areas.

Kohl & Madden Printing Ink Corporation was one of four ink companies who "after extensive research" field tested their inks under controlled pressroom conditions at the Rochester Institute of Technology (40) in the early months of 1971. In June of 1971 (41) K & M announced very satisfactory results with their CLEAN-AIR inks in four-color printing trials using normal procedures and existing equipment. Satisfactory de-inking of printed waste has also been accomplished (42) based on tests performed by an independent paper testing laboratory. To our knowledge commerical trials and use with the K & M inks have not been publicized.

A July 1971 trade publication (43) announced the availability of Inmont Corporation's new low-solvent heat-reactive inks (XL-37) "designed to eliminate air polluting characteristics from printing ink solvents." The ink, is however, not catalytic, but a low-solvent (28 to 32 percent) heatset ink that may be dried at 250-280°F (44). The solvent content is comprised of two "deodorized solvents which are exempt under Los Angeles Rule 66". The XL-37 series, as well as a newer LTD (low-solvent low temperature) series (30 to 35 percent solvent and 200°F drying temperature), are said to offer advantages over a conventional heatset web offset ink (containing 40 to 45 percent solvent) including better gloss, outstanding resistance to scratch, rub and body oils, better drying, reduction or elimination of condensate in the dryer and 50 percent lower level of effluent. As recently as May, a representative of the company said that it would be premature to discuss their experience in the area of the "high solids heat-reactive" systems they have developed, except to say that some serious drawbacks have been recognized (44). Inmont also conducted 1971 trials at Rochester Institute of Technology (RIT).

Richardson Ink Company's SOLIDstate inks were introduced in 1970 after five years of development work (38). There are single component catalytic (heat-reactive) inks for both web offset and web letterpress. SOLIDstate inks contain "no hydrocarbon oils or petroleum products". Successful production runs were made at several large printing plants. High quality products were obtained using standard process colors, on both heatset letterpress and offset presses at speeds up to 1100 feet per minute. Shelf life is specified to be approximately 60 days. A late 1971 news release stated that this ink "produces a slight odor at the fountain, but is neither offensive nor harmful...enables the printer to meet new clean air regulations easily...if used exclusively, it is not necessary to install or operate costly afterburners to oxidize hydrocarbon emissions. There are absolutely no hydrocarbon air effluent pollutants in the formulation." Hydrocarbon emissions in stack tests were reported to be zero. Patents for these inks are pending. A successful de-inking process involving only minor changes in the traditional method has also been publicized by Richardson (45). However, commercial acceptability of any modified de-inking procedure by paper mills is yet to come.

Unfortunately there has been a tendency in the graphic arts industry to refer to all the various commercial heat-reactive catalyzed inks as "solid-state inks". This is improper reference, however, since SOLIDstate is the property of the Richardson Ink Company.

Roberts & Porter, Inc. introduced in 1970 (34) a "completely solvent-free, non-polluting heatset ink" for web offset usable with conventional drying ovens. No additional publicity has been noted but field tests in printing plants are known to have been performed in recent months.

Sinclair & Valentine's solventless heat-reactive catalytic web offset inks announced in 1970 (34) reached the commercialization stage in January 1971 (17). As with the other heat-reactive inks, they are compatible with conventional equipment including dryers. There is no odor and no problem in repulping paper (11). Systems (two-component) are available for both offset and letterpress. At least one field test was performed as part of the cooperative project mentioned earlier at RIT. It is reasonable to assume that S & V is sharing the present market.

The General Printing Ink Division of Sun Chemical Corporation developed Thermofast, said to be the first (early 1970) of the crosslinked type of solventless inks announced (29, 33). Their innovative inks have resulted from basic research initiated in 1965 (7). The single-component system contains a liquid resin and a catalyst which is effectively blocked at room temperature and becomes active only when the ink is heated to elevated temperatures in the area of 300 to 350°F. No solvents are emitted upon drying and only minor amounts of non-toxic reaction byproducts (46). Thermofast "represents the first step in creating a new generation of inks that will have better performance characteristics than conventional inks, plus assisting in protecting the environment," said an executive of the company in the announcement. ink may be used with present press equipment, although drying can be smaller and maintenance costs less (33). The usual e high print quality features are obtainable. Improvements in ths have made possible drying temperatures almost as low conventional heatset inks, stability of 90 days or better, scratch resistance (47). Dozens of commercial trials ntry have indicated uniformly good ink properties.

mpany of Cleveland and Superior Printing Ink Co e related that they also have developed he

publication (48) that Stanfor
s inks especially for Mo
, these presumably
"paper is hea
ll in the d

The press utilized was a five-unit one equipped with a direct-flame hot air dryer with its own exhaust, and the stack configuration was ideal for sampling. To eliminate one variable, paper from only one company was used, a 50-pound web offset type, 34 inches wide.

The three heat-reactive inks — A, B and C — contained 15, 10 and 0 percent volatiles, respectively. Ink D, conventional heatset, contained 35 to 40 percent volatiles.

Before any printing took place, samples were taken of the dryer at the operating temperature and then with paper only, running at 12,000 impressions per hour through the dryer. No odor or visible emission was noted. The inks were run in the sequence: D, A, B, C, D.

Inks A and C were run for two to three hours, during which time no visible emission or odor was noted with either ink and the quality of product was judged acceptable by both plant and GATF personnel. An offensive plant odor (similar to aldehyde) was noticeable while Ink C was running and clean-up difficulty was experienced with C possibly because some reaction had occurred on the plates and in the ink fountains. The possibility exists, however, that improper wash-up solvent was employed.

Ink B proved to be incompatible with the type of plate dampening system on the press and the quality of the printed product was unacceptable. The ink company representative said that this problem is soluble. However, samples were taken as with A and C during the one-hour run. No visible emission or odor was detectable.

The conventional ink (D) was run before and after the three others. Effluent samples were taken during both runs. A slight odor was detectable in the sampling area and a Ringlemann No. 3 was noted during a 12 to 18-minute press equilibration period. Thereafter, a Ringlemann number approximately 1.5 was visible. The web temperature measured during the runs with Ink D was 280°F, and with Inks A, B and C the temperature ranged from 320 to 340°F.

The general attitude of all personnel was one of optimism and enthusiasm for a possible solution to the air pollution problem without sacrificing product quality, especially gloss. Also, as mentioned previously, the thermally-catalyzed heat-reactive inks require no equipment modifications as do the UV inks.

1.22 Photo-reactive (UV) Inks

Three ink companies have advanced at least to the stage of press trials with UV inks (7). Two are Sun Chemical and Inmont. Sinclair & Valentine may be the third, but this could not be confirmed.

Patents issued to Sun in 1970 and 1971 (49-54) are the result of ten years' research. During 1970, drying with ultraviolet energy was demonstrated to a selected group of web printers at a press manufacturers' plant (17) and subsequently received controlled commercial exposure using six "Suncure" ink systems. The company also has developed its own curing unit for drying Suncure inks (55, 56) said to be about 10 percent of the cost of a printing press (57).

Two large printing firms in the Midwest are known to have had this equipment installed in the past year (58-60), Jensen Printing, a subsidiary of Holden Industries, in Minneapolis and I.S. Berlin in Chicago. Sun anticipates having six to eight web offset installations completed by the end of 1972. Interestingly, only one-third of the installations to date have been based on the ability of the system to provide solutions to emission problems. Special film properties that the inks are capable of providing prompted the others. According to the executive officer of Sun Chemical, the Suncure drying system will afford no profit to the company for two years (61).

Initial reaction of the first few months of use at Jensen is generally cautiously enthusiastic (62-64), with the economics in long-range perspective undetermined, constant attention to employee safety must be unrelenting and vigilant, and quality of product "commercially acceptable" rather than excellent. The latter necessarily affects customer acceptance. Ink costs per pound are more expensive with mileage not yet known; actual energy consumption and life of tubes in the energy source is undetermined; the extent of actual paper waste (which is not de-inkable) is not known but expected to be less; and press make-ready times, potentially reducible, have not yet been established as routine. I.S. Berlin has not issued any comments yet. This installation was made more recently.

In late 1971 the largest financial printing operation in the country, Bowne & Company of New York, announced the installation of a UV-ink curing system for a new web press. This drying unit was obtained from Thermogenics of New York, Inc. (68-70), but the ink supplier was not identified. It may have been Inmont.

According to a Bowne executive, had UV inks and the drying (curing) system not been available, the web press, although desperately needed, would not have been purchased because of their location (in New York City on the eleventh floor of a 17-story office building), the need for unusually large quantities of duct work, and costly afterburners requiring additional fuel already in short supply. In addition, the company wished to avoid the possibility of production shutdown as during an air pollution emergency episode. Their economic health, they said, depends on rapid turnout and a high degree of efficiency, especially because of their liaison with the Securities and Exchange Commission in Washington.

After several months' use, Bowne spokesmen cited some of the economic advantages as: 1) savings in press costs since downtime is reduced for such purposes as washups or other interruptions, partially due to 2) ink stability which eliminates spraying ink rollers during shutdowns to avoid ink drying on rollers, with subsequent running of paper (causing waste) to render the rollers once more operable; 3) no change in properties of the paper web such as moisture content and thereby size and/or tensile; 4) reducing the number of web breaks caused by moisture loss or scorch; 5) the feasibility of running lighter weights of paper; and 6) elimination of many bindery problems caused by cracking along folds.

Among the disadvantages Bowne cited are the cost of UV inks, not necessarily justifiable unless faced with pollution control expenditure, the inability to print on polyurethane, the unavailability of UV-curable metallic inks, and the difficulty with de-inking of waste.

Except for the necessity to properly train operators, Thermogenics states that there is no physical danger involved with the UV drying system since all the necessary safety consideration such as guards and interlocks are built into the system (68).

An estimate of comparable equipment costs (no energy) by Thermogenics for a one-web four-color press was $22,500 using ultraviolet energy and $73,500 using gas. The latter included dryer ($28,500), chill rolls ($17,000), cooling system/tower ($18,000) and afterburner ($20,000).

Inmont Corporation (formerly Interchemical Corp.) was issued its first patent for the drying of special inks by ultraviolet radiation in 1946 (39, 65) and patent applications have been filed on their new UV-curable ink compositions (66). The first web offset commercial installation was scheduled for 1971.

Inmont has developed two UV drying systems — UV-cure and UV-set (66). With the UV-cure system, printing is by the conventional manner and dried completely by exposure to ultraviolet light. The UV-set ink system, developed for sheet-fed work, contains enough photopolymer in the mixture to polymerize the film to a tack-free print quickly by exposure to ultraviolet energy, and to later completely dry by oxidation. The principal advantage of the latter system is that the inks cost less than conventional inks, only five to ten percent more according to one source (67). However, the system requires more energy than the UV-cure system.

Commercial application of UV curing of ink films on plastic containers has been mentioned briefly in the trade press (71). A demonstration at the AMA Packaging Exposition in April 1972 showed a dry offset press using multi-color UV-inks and UV-cure at speeds as high as

300 containers a minute. Dry offset is a variation of the letterpress process that employs a letterpress plate, transfer of the ink to a blanket mounted on an intermediate cylinder and thence to the substrate.

1.3 Ink Reformulation

The use of highly refined and deodorized solvents to reformulate heatset inks was inaugurated several years ago, primarily to improve the esthetic qualities of the printed product. More recently, reformulation to reduce the quantity of solvent is being studied, as indicated previously by Inmont.

Many of the new state and local regulations (applicable in 1973 and later) restricting hydrocarbon emissions exempt, or are less stringent toward, the use of materials containing no more than 20 percent of volatile organic solvents provided that no additional volatiles except water are present and that the volatile content is not photochemically reactive. Most of the heatset ink solvents are sufficiently low in aromatic and olefinic content to be classified as photochemically unreactive. Accordingly, resins or resin combinations possessing increased solubility in these solvents would be desirable. The degree of success in this area throughout the ink industry is not known, but at least some ink manufacturers involved in this pursuit are optimistic.

1.4 Miscellaneous Materials Modification

In 1971, the Lithium Corporation of America introduced a new liquid polybutadiene-alpha methylstyrene copolymer resin for solvent-free manufacture of printing inks and coatings (72). Trademarked as Lithene Y, the resin series, available in both low and high molecular weights eliminates the need for solvents because of their low viscosity as 100 percent solids. Publicity indicated that the materials would be marketed to manufacturers of coatings and intermediates. No information regarding use has been noted.

Recently, Richardson Ink Company announced the development of an ink system that eliminates the need for overprint lacquer when printing aluminum beverage cans (73). The inks, carrying the trademark Duralum Mark V, have excellent mobility and reduce misting at the press, and produce a hard finish with high gloss. "Because they are 83 to 93 percent solids there is less hydrocarbon effluent during printing, reducing air pollution." (Lacquer systems normally used in metal decorating contain 75 to 85 percent solvent.) No additional information is available at this writing, except that "Duralum is finding wide use in the beverage industry."

In addition to the effort being expended by all facets of the industry to the effluent problems of the web printer and metal decorator, much attention is being directed toward the other major printing processes. Water-base inks, solventless inks and high gloss coatings which dry (or cure) at room temperature are the major areas of study.

Although the study reported here pursued the problems of other processes, awareness of technological developments throughout the industry has been maintained and several pertinent references are included in the bibliography.

1.5 Trends

It is evident from the preceding paragraphs that a variety of possible options exist, in various stages of development, to pursue reduction of pollutants through the materials charged to process, principally the inks and coatings. In reality, each company or plant must make its own choice, and each evaluation must be made in relation to its locale, economic health of the plant (whether a single plant or multi-facility company), existing regulations and the likelihood for their becoming more restrictive, availability and cost of energy, and available investment capital. The economics of the printing industry are such that printers can accept only modest increases in cost. It is unlikely that one approach more than another will characterize the industry's decisions regarding control of air pollution during the next five years. A few generalizations can be made, but each will have exceptions, for management attitude is personal and cannot be assessed with any degree of predictability.

Small to medium-size companies generally will choose reformulation, if possible,where immediate action is necessary. New materials that will allow them to achieve compliance with a minimum of process procedure change, at least initially, and the least economic effect on the status quo will be utilized.

For the most part, the large companies are the leaders in gaining acceptance for innovations. And so it is they who become the pace-setters. The initiative of three large web offset printers was mentioned on page 26. Early in 1973, Continental Can Company, a major metal decorator announced the installation of the world's first commercial system for UV curing of printing on metal. The new process is designed for lithographing on flat metal sheets used for three-piece cans, but is adaptable to two-piece cans. An annual capacity of six billion cans is expected to be realized by the end of 1973, and more than half of their total capacity by 1975. Although the inks are more expensive, large ovens that used substantial quantities of natural gas are unnecessary, and the length of the production line is reduced substantially. An executive officer of the company stated that the new system "will allow us to conserve 85 percent of our present energy requirements" (73a).

In addition to intra-corporate considerations, large companies also form the nucleus of industry-wide activity. Late in 1972, the Environmental Conservation Board of the Graphic Communications Industries, Inc., composed of executives of major companies and associations, was established for a cooperative industry approach to help the several industry segments that face problems involving air and water pollution as well as in-plant safety and health.

While the organization was still incomplete, GATF organized an Ad Hoc Web Heatset Committee, and developed a cooperative program, with the evaluation of new inks and drying systems having highest priority. The first effort of this group is reported on pages 24 and 25. The tests are continuing. There is general agreement in the industry that bringing together, literally, all elements concerned in the process to the problem is expedient and mutually beneficial. Printers of all sizes are offering their facilities, dryer manufacturers their expertise, and paper and ink companies their supplies. All are furnishing personnel and time.

The autonomous group expects their effort will achieve not only compliance for our industry but hasten acceptance by printers of new procedures. Part of the proposed activity of the parent Environmental Conservation Board is to sponsor research and development in areas not yet specified. The ink companies, of course, are continuing their corporate research and development. It follows that accomplishments and improvements within these companies will be made public at appropriate times in the conventional manner.

2.0 PROCESS MODIFICATION/CONTROL EQUIPMENT

In addition to the extensive investigation in modifying the inks to reduce or eliminate their potential for organic emissions, some progress has been realized in process variation, mostly in the area of press speed and dryer operation, with and without control. Air flow rates in the dryer have been reduced in certain instances without sacrificing efficiency (74). The extent to which industry can eliminate the practice of emitting all the air from the web presses directly to the atmosphere is being investigated. If higher organic loadings of the gas stream can be controlled satisfactorily so as to operate at a high percentage of the LEL, cleaning the gas stream would be somewhat simplified and a smaller portion of the overall gas flow could be emitted and a larger part recycled.

Additional considerations, experimentation and experiences are included in the following sections.

2.1 Incineration

Both catalytic and thermal incineration continue to be established and efficient means to convert solvents and fumes to carbon dioxide and water under properly controlled conditions. In fact, this route has been that followed by almost all of the heatset web printing and metal decorating plants which have installed emission control equipment. High capital investment, operating and maintenance costs have been offset partially by heat recovery. Designers and manufacturers are continually improving both dryer and afterburner equipment, so as to better serve industry's needs. The following are examples.

A modular ink drying and emission control system has been developed (75-77) that may be installed as a unit or as separate components. The dryer is designed to fit all web presses and the afterburner can be used with existing dryers. (Mechanical features of the dryer permit conversion to UV-cure.) The system features a sinusoid wave web control that provides improved drying capability with stable web behavior at lower web temperatures. Heated air applied from alternately separated nozzles, above and below the web, causes the web to travel through the dryer in the sine wave pattern rather than a straight line. Drying efficiency is increased at lower temperatures through the complete range of ink coverages, web speeds and web weights. The afterburner may be placed directly on top of the dryer or at a remote location.

Also in mid-1971, the "first one-piece high velocity dryer ever built" was announced (78) offering the advantages of compact size, fast and less costly installation and add-on capability. Other various features of the standard model were retained including sine wave

positioning, easy internal access, low exhaust rates and cool external surface temperature, among others. In 1972, the same company released news of an afterburner and "element for odorless discharge with up to 95 percent hydrocarbon cleanup at exhaust temperatures as low as 1200°F" (79,80). No preheating is required and the equipment is "guaranteed to combust hydrocarbon material, fumes and odors to meet air pollution authority requirement." Applications specified for the unit include printing and metal decorating.

2.11 Energy Shortage

Much of the dryer and incineration technology and equipment refinements have been the result of limited fuel supplies as well as the traditional goal of efficient and economical operation.

Those who have investigated the use of incineration to control organic effluent are acutely aware that the shortage of natural gas is serious (81). Even the most casual reader of the daily newspaper knows of the fuel and power crisis, and the shortage becomes quite personal when the homebuilder is faced with the possibility of curtailment. Reams of paper have been filled with discussion of the subject, and 55 studies on the national energy crisis have been conducted in the past few years according to the federal Office of Science and Technology. The Federal Power Commission (FPC) said that the U.S. gas industry reached a turning point in 1971 — the end of that industry's growth period unhampered by supply considerations. The head of FPC's natural gas bureau said that never again will there be enough gas to meet all demands. By 1990 the deficit will have increased by 17 trillion cubic feet. Ironically, efforts to alleviate the energy crisis by increasing capacities and sources for generating other forms of power, e.g., electricity, cause environmental problems, and it is to restore the environment that a portion of the additional fuel is needed. Unfortunately, but inevitably, the areas in greatest need of pollution control are the same areas where fuel and power needs, and shortages, for people and industry are also the greatest.

The dilemma of printing management attempting to comply by incinerating is obvious. Many areas of the country do not and will not have available the additional quantities of gas required. Afterburners have been adapted in some cases to utilize other fuels such as oil (which may pose additional problems) and liquefied petroleum gas (LPG) representing substantially higher fuel costs. Definite differences of opinion exist among members of the industry as to the utility of fuels other than gas. Manufacturers' representatives, however, have indicated that new types of burners are capable of utilizing fuel

oil and that the principal problem may be one of adequate supply with limited sulfur content. At least three installations using fuel oil are now operating with hydrocarbon reduction in the area of 98 percent, according to a representative of an incineration equipment manufacturer. The plants were not identified.

2.2 Carbon Adsorption

Adsorption of organic effluent has not been recommended for heatset ink systems because organic degradation products in the exhaust can render the carbon ineffective within a few cycles and are difficult to remove from the activated carbon when regenerated with steam. Also, the utility of the material recovered is questionable. Several years ago, charcoal adsorption was tried on a pilot plant scale in a metal decorating plant in Los Angeles (82). Because of the degradation products of resins and drying oils, as well as the complexity of solvents involved, the material recovered was so contaminated that, even after rather sophisticated fractional distillation, the company's quality control department would not recommend it even for wash-up purposes.

However, a web offset printer on the West Coast has adopted this approach for emission control. Since patent possibilities are being pursued, no details are available. To our knowledge, the adsorption principle is not now being investigated for control in metal decorating.

2.3 Scrubbing

There has been no report, public or private, of an attempt to use scrubbing in the industry as the sole means to control air emissions from printing processes. Much discussion has taken place between companies and consultants of the possibility of effective performance, but to our knowledge no one has been willing to assume the necessary risks involved. All the unknown quantities set forth in our first report (1) including that of possibly creating water pollution problems remain unresolved. One instance is known where a Venturi-type scrubber was evaluated for a web offset installation with negative results. Scrubbing (with a suitable liquid) is included as a possible means of control for organic solvent emissions in the literature (83). However, it is acknowledged that if the solvent concentration in the gas stream is low and/or the solvent is not recoverable, scrubbing, as well as the alternate of condensation, may not be economically feasible.

However, in operations with allowable quantities of solvent emissions but faced with solving an odor problem, the use of potassium permanganate in an aqueous scrubbing medium, provides a possible solution to some odor problems.

A 1971 survey on air pollution research problems (84) cites odor control as a continuing difficult and complex problem, especially in the treatment of large volumes of air contaminated by traces of odor-causing organics.

The technical coordinating committee on particulates of the Air Pollution Control Association recently published a report that represents the "best thinking of the Association" on wet scrubbing (85). The paper is not a state of the art report, but a guide with its main purpose "to provide information required for (a) the selection and specification of equipment by the prospective suppliers, (b) the evaluation of competitive bids by the prospective user, and (c) the evaluation of equipment performance under actual operating conditions by both user and supplier." The applicability of the process as well as economic, environmental and engineering factors involved in selection are discussed in detail. This report is recommended especially to any facility considering scrubbing as a means of control for liquid particulate matter.

2.4 Ozone Treatment

Odor problems can exist where emission limitations of organic material are not exceeded or where such regulations do not exist, as in Priority III areas of Air Quality Regions. Odor and nuisance regulations have uniform applicability.

Ozone could have possible applicability in odor control in web offset emissions if two major problems were solved. Ozone will react with oxidizable organic material provided that an adequate concentration of ozone and adequate residence time, up to ten seconds, is allowed. The production of ozone is relatively economical and several companies have commercially available systems to generate the gas. However, ozone as a photochemical oxidant may not be emitted from the stack and the usual press and dryer systems have much shorter residence times than ten seconds.

Concerning the first problem, there is relatively little danger that ozone would be emitted since its lifetime at elevated temperatures is extremely limited, but the possibility would exist. However, the second problem would require that some provision be made for a longer holdup of the gas stream within the system if odor control were to be achieved, and the effect of ozone on the composition of materials used in the exhaust system would require investigation. To hold exhaust in the dryer for a longer period of time, as by recycling, would cause some risk of maximum buildup of organic vapors in the air stream which is normally limited to a percentage of the LEL. New and serious problems become obvious.

At least two printers were reported to have tested the effectiveness of injecting ozone into the stack for odor control, but neither could be confirmed.

The Department of Health, Education and Welfare has recently proposed (86) limitations on the level of ozone that may be emitted from a device, either by design or as an incidental byproduct. Such a device will be considered adulterated and/or misbranded if "it is used or intended for use to produce and emit ozone into the atmosphere and does not indicate in its labeling the maximum acceptable concentration of ozone which may be emitted (not to exceed 0.05 part per million by volume of air circulating through the device)... and the smallest area in which such device can be used as not to produce an ozone accumulation in excess of 0.05 part per million." This proposed amendment to the Food, Drug and Cosmetics Act (now in the 60-day period allowed for comment) would affect the use of ozone as mentioned above, but probably not inhibit it. The quantity of ozone (if any) in the effluent would have to be determined, and possibly monitored.

2.5 Coating Process for Web Offset

Some experimental studies have been in progress for several months in the Midwest involving the use of a coater for applying a quick-drying coating to an oxidative-drying ink film in a high speed web operation. Low concentrations of a polymeric ester (Eastman Chemical's Alcohol-Soluble Propionate) in 95 percent ethanol solution can be applied, as one example, with a flexo coater to protect the slow-drying (conventional) ink film from setoff (transfer) while the oxidative drying proceeds under the coating applied at speeds up to 1600 feet per minute. The protective film is dried in a warm (140-150°F) atmosphere with ethanol and water the only solvents evolved and emitted from the process. The company expected to have set up this summer a web press so equipped for an adequate commercial evaluation of a variety of ink, paper and coating combinations. Eventually, they will be willing to make the information generally available to the industry.

This approach would not, strictly speaking, eliminate "liquid organic material" from a plant's effluent. However, being a photochemically unreactive low molecular weight aliphatic alcohol, vaporized below its boiling point, would seem to allow the emission and the process to require little or no control. In addition, the opportunity for visible emission and nuisance odor is virtually eliminated.

2.6 Electrostatic Precipitation

Electrostatic precipitation for smoke control has been proposed for

at least one large plant in an "urban-suburban" location. The approach suggested is to inject an oil mist into the gas stream, before the precipitator, to absorb organics from the gas stream. Although the particles certainly would be collected with this type of system, the plant engineer believes that it undoubtedly would introduce some pre-cooling and premature precipitation in areas where this would be undesirable. It is doubtful that this approach will be pursued.

3.0 INSTRUMENTATION AND CONTROL EQUIPMENT

Characterization, preservation and restoration of the atmosphere rely heavily on the technology afforded by instrumentation, in both the broad and narrow concepts of the word. Indeed, current technology is not yet sufficient to define all of today's pollution problems, much less solve them. If it were sufficient, an unadulterated environment could be achieved entirely by moral and financial commitments.

It seems practical and expedient here to minimize discussion of this facet of the entire experience of the study and direct the reader to the references in the bibliography that comprise recent trends, attitudes and emerging technology.

Most industries have some problems in common, but as each investigates its own, many problems defined are peculiar to a given industry. Few are able to control emissions by duplicating procedures found suitable to others. Even the applicability of existing instruments — to measure and identify pollutants — cannot be predicted. Only after experimentation that defines accurately the problem, is the solution indicated and finally prescribed.

Some of the new developments in instrumentation and equipment for use of the printing industry in pursuit of its responsibility toward the environment have been included in the foregoing discussions. An economical measurement system for hydrocarbon emissions capable of monitoring or making analyses on site would be a valuable contribution to the web printer and metal decorator.

Strictly defined standards are imposed and the degree of accuracy required in measurement is not available in all situations. A whole new market for instruments and equipment now exists, and so essentially a new industry is born. A $500 million figure has been projected as the probable size of the market in the period 1970-1980, for instrumentation (86a-86d). Sophisticated sensors, e.g., solid state, that have sensitivity, specificity and reliability are urgently needed.

Applications for patents on inventions which might curb environmental abuses have been receiving priority treatment since early 1970. Processing of applications requires six to eight months rather than the usual average of three years.

Monitoring emissions is implicit, and in some cases explicit, as a means of air quality control. Recent (state and local) regulations require continuous source monitoring while operating under a variance. The states themselves must set up ambient air monitoring systems to comply with the Clean Air Amendments of 1970. However, governments and regulatory bodies have been monitoring, some for

many years, for data on which to base rules. Pennsylvania has installed, and in partial operation, a $2.3 million air monitoring system reputed to be the most efficient of any state. Continuous readings of one per minute from 17 remote units on levels of 13 parameters, including measurement of the six pollutants for which standards have been established, are transmitted to a central station. Since the system was financed primarily by EPA, the design is available to other state and local agencies.

Individual monitoring by companies of their sources has become necessary only recently to avoid citations. In source monitoring by individuals, one major obstacle, in addition to in-house trained personnel, is the lack of instruments to measure (and record) economically and accurately specific pollutants in the presence of known and unknown interfering substances. Much remains to be accomplished in this area.

Partially because all these considerations represent considerable expenditure without definite utility, and partly because it is typical of American business enterprise, renting and leasing of instruments and equipment, as well as services, is becoming popular.

Various annual pollution control directories to products and services are being published. The December issue of the "Journal of the Air Pollution Control Association, a Fall issue (usually October) of "Environmental Science and Technology", a publication of the American Chemical Society," and the Deskbook Issue of "Chemical Engineering," published by McGraw-Hill are typical. In addition, the books, periodicals, monographs and conferences of the Instrument Society of America are valuable contributions to the subject.

The Environmental Protection Agency published reference methods and available instruments as appendices to the announcement of National Primary and Secondary Ambient Air Quality Standards in the Federal Register on April 30, 1971 (36, 8186). Each reference method describes a procedure for evaluating the ambient concentration of a pollutant. Appendix E, pertaining to hydrocarbons, includes a bibliography of several references. Instrumentation of several companies is cited: Beckman, Bendix, Byron, Mine Safety, Monsanto, Union Carbide and Tracor.

4.0 SAMPLING AND ANALYSIS OF STACK EFFLUENT FOR GRAPHIC ARTS PROCESSES

4.1 Introduction

Originally in Phase I, air pollution control instrument manufacturers and printing and metal decorating companies with appreciable air pollution experience were contacted, and provided valuable practical information to aid in evaluating various methods of emission sampling equipment and analysis, and to develop procedures sufficiently accurate, reliable and simple to engage in subsequent project activity. Much field trip data were gathered from printers, metal decorators and suppliers to the industry, and represented background information for activity in sampling, analysis, measurement of emissions, and characterization of the industry's air pollution problems.

To assist in accomplishing the objectives of the project, the service of the Physical Measurements Laboratory of Carnegie-Mellon University (CMUPML) was engaged. Their tasks were to review methods for measuring emissions and to make appropriate recommendations as to a method to be employed in printing press/metal decorating effluent measurements. Approximately seven methods of sampling and analysis of effluents from printing and metal decorating operations as well as those described in published literature were obtained from field trips. The information was forwarded to CMUPML personnel for their evaluation and use. Tables 1 and 2 (Appendix C) outline the various sampling and analysis techniques reviewed, and includes a summary of the salient features of each method used.

Upon review of these methods of sampling and analysis, CMUPML along with GATF, during the Phase I contract period, recommended methods using appropriate sampling and measuring equipment and acceptable analytical technique. Further work under Phase I entailed preliminary evaluations of various methods of sampling and analysis. It became increasingly apparent that before standards of control to govern pollutants were established, devices and procedures to measure these pollutants had to be developed.

Also under the Phase I contract, an overview of the industry's air pollution problems was gained, and reliable methods for measuring emissions, both qualitatively and quantitatively, were evaluated. Information was collected on control equipment and on various process modifications that might serve to mitigate the quantity or character of effluents. This Phase I study considered the various types of printing processes including metal decorating. The degree that the graphic arts industry was involved technically in pollution, the problem of defining materials, processes, and available emission control alternatives were explored along with development of a

sampling and analytical procedure capable of measuring emissions from various graphic arts industry.

Following the Phase I contract commitments, a major task of Phase II was the development of a reliable source sampling and analytical method that could preferably be universally applied. To this end printers and metal decorators were asked to contribute the use of their physical resources. Certain plants were selected because they were ideal sampling locations, and they were requested to assist in GATF's air pollution activities. The long-range objective was to use a method of measuring emissions explored in Phase I to characterize effluents with respect to process and product, and then to establish a basis for reasonably predicting the types and quantities of emissions according to process and throughputs.

The effectiveness of air pollution control equipment presently in use were determined by emission measurements. Analytical procedures developed in the Phase I effort were applied in Phase II to determine the capability of control techniques for existing equipment and for evaluating new control processes, material modifications, and equipment. Here too, GATF industry members presently utilizing air pollution control equipment, as revealed by a recent survey and various field visitations, were requested to permit field sampling.

4.11 Sampling

It should be noted that two sampling principles, grab and continuous as well as modifications thereof, have been generally used in graphic arts processes. A "grab sample" is a sample taken at a particular time within a very short defined time interval. A "continuous sample" is a sample taken from an effluent stream over a relatively long period of time. Grab sampling techniques can be modified to take a continuous sample within a restricted time period by the utilization of a device to indicate and regulate the sampling flow rate.

After reviewing various sampling methods and taking into consideration that the pollution in graphic arts processes is gaseous in nature, generally steady in output over time intervals, and can be usually found relatively uniform in distribution across some particular location of a stack's cross section, and that flow velocity, dependent upon exhaust fan operation, is normally steady, it was decided that a sampling technique appropriate to the study would be a modified "grab" method by which a true representation of pollutant concentration should be obtainable. There is seldom a sampling situation, in the graphic arts industry, in which a steady and uniform process variable (e.g. pollutant concentration, pollutant exhaust flow rate, etc.) location cannot be found.

A common collection technique used in grab sampling, shown diagramatically in Figure 3, (Appendix B) is the use of evacuated containers of glass or metal. A sampling train designed for specific situations encountered in the various printing processes includes a

probe inserted into the duct, a cold trap that functions to collect the condensible portion of the sample, heating tape on the probe to maintain its temperature above the dew point of the gas stream being sampled, and a precision needle valve to provide a repeatable sampling rate. When this valve is opened, sample is admitted to the evacuated cylinder over a definite time interval.

Upon review of established and field-tested grab sampling techniques, a prototype field sampling apparatus was assembled by personnel of the Physical Measurement Laboratory of Carnegie Mellon University and field-tested by GATF. The apparatus (schematically shown in Figure 4 (Appendix B) and photographically shown in Figure 5 (Appendix B) consists of a 300-ml stainless steel cylinder with a threaded opening at both ends. A vacuum gage is attached to the lower opening when held in a vertical position. The upper opening connects to a union, a needle valve, a second union, and a fabricated double-tee fitting connected to the U-shaped trap. After the trap, another union is used to attach the sample probe. When the trap is detached, each end is capped with a fitting before removing from the dry ice bath. Both trap and probe are 1/8" stainless steel tubing, and the probe length chosen was two feet. This length could be changed depending on stack width and sampling location. The trap was 14 inches long with approximately 12 inches immersed in the dry ice trap.

The volume of gas sample needed for analysis depended primarily on the sensitivity of the analytical method used, and the concentrations of given components in the gas stream. This last consideration was also the basis for selection of particular sampling equipment and analytical methods to be employed.

Two factors were considered in selecting the dimensions of the gas sampler:

1. Since the trap and probe initially contains normal air which is swept into the cylinder during sampling, a correction factor must be applied to determine the actual sample volume.

2. All of the condensibles must be injected at once into the chromatograph for analysis; consequently, the size of the cylinder must be such as to insure collection of an appropriate quantity of condensible material.

A 300-ml sample cylinder and 1/8" O.D., 38" long (probe and trap), 24-gage tubing necessitated a correction for air of only 2.5 percent to the cylinder volume. Assuming a maximum concentration of condensibles on the order of 1000 ppm, the trap could contain about 1 mg of sample for injection into the chromatograph.

are substantially smoother, have exceptionally high scratch and rub resistance, and very little solubility in greases and skin oils. An attractive feature of these inks is that they can be used with existing equipment — presses and dryers, ink fountains and trains.

However, because heat is required for drying, these inks cannot be used on sheet-fed presses, the heat required tends to dry the paper more than is desirable, and the properties of the ink which impart high scratch and rub resistance also make repulping of the printed waste paper more difficult. Other objectionable properties of some of these inks are in-plant odor (the reaction mixtures are unpleasantly odiferous), two-component systems must be mixed before use and unused mixed ink is not recoverable after completion of a press run. The latter could increase costs substantially. Informally it has been reported that heat-reactive inks have caused problems with static electricity in the folding operation. This phenomenon has been explained, at least partially, by the fact that some of these inks are melamine-formaldehyde systems which are good dielectrics and that charges build up readily on the surface during web transport.

These disadvantages coupled with the principal one of price (35 to 80 percent more than heatset) may delay their wide acceptance. However, an ink company spokesman estimated that a printer using 250 thousand pounds of ink per year and forced to install incineration equipment would effectively increase the cost of his conventional heatset ink to 97 percent of that of heat-reactive ink. Also, when these inks become a large-volume production item, the price may drop somewhat. The president of a major ink company marketing heat-reactive inks stated (10):

> "Our assessment of the market generally indicates these inks will not receive printers' acceptance until such time as the printing business finds a level of equity in the competitive requirements of effluent control related to economics within a given competitive situation. This is not unusual as this same type of condition seems to exist in many other area industries."

1.12 Photo-reactive Inks

Photo-reactive ink systems utilize ultraviolet radiation to initiate a free-radical polymerization which is accomplished in one second or less. The novel vehicles involved consist minimally of one or more monomers and a photo-sensitizer which selectively absorbs energy in the wavelength region of 2400 to 3600 angstroms. These inks have become known as UV-inks.

Unlike the heat-reactive (thermally catalyzed) systems, most of which contain limited amounts of solvent, no solvents are contained in the UV-reactive mixture. Also, there are no byproducts since the reaction

is addition (rather than condensation) polymerization. The system is reported to be simple to operate and easy to maintain (11). Since the reaction is cool (120 to 125°F, ca. 50°C), a minimum of moisture is lost from from the paper. Paper handling problems caused by brittleness are thus reduced. The low reaction temperature may allow chill rolls to be eliminated. Chill rolls are now an integral part of web presses using conventional heatset or heat-reactive inks. However, chill rolls commonly serve to not only cool the web but also to help pull the web through the press, and removal would depend on press manufacturer determination. In addition, a printer has indicated that the need for chill rolls depends on the temperature at which given resins (ink films) no longer are tacky. Tests have indicated that substantially all of the lamp energy is absorbed by the system, with approximately 25 percent to the web.

Since the UV inks do not react until exposed to the energy source, they may be allowed to remain in the fountains and on the rollers for long periods of time. No washup is necessary between runs or after web breaks. They are equally applicable to letterpress and offset, sheet-fed and web.

UV inks offer several advantages that are specific to sheet-fed lithography. An ink film that dries instantaneously precludes the possibility of "setoff", the unintentional transfer of ink to adjacent sheets before the ink has dried completely. With the possibility for setoff eliminated, there is no need to use "anti-setoff sprays", powders that are applied to protect an ink film that is "set" but not "dry". The use of these dry powder sprays can cause an in-plant dust nuisance. Also eliminated with the use of UV inks in sheet-fed work is the annoying necessity at times to "ventilate" stacks of printed sheets as the oxidative drying process continues. Conventional inks dry by oxidation over a period of several hours. The process of ventilating the stacks by riffling the sheets is called "winding" by printers.

The attractive features of the UV-cured ink film are similar to the heat-cured — smooth, resistant to scratch and rub, etc. De-inking of printed waste is not possible using conventional commercial procedures. Much effort is being directed toward providing a process for waste paper recovery, essential in the traditional economy of the industry.

Irrespective of the advantages, real and potential, some disadvantages exist that must, at present, be considered serious deterrents to their being used extensively soon (12, 13).

These inks can be as much as 75 or 100 percent more expensive than conventional heatset inks and the press itself must be equipped with

Several modifications were possible with this sampling equipment. The trap length could be increased from 14 to 24 inches or longer if the tubing was further coiled, and column packing or a glass wool plug could be added to the trap which, due to the increased surface area provided, could help catch condensible material. Provisions could also easily be made to plug both ends of the probe after sampling if condensible material was being collected in the probe.

4.12 Analysis

Once a sample has been obtained, it must be analyzed either on-site at the field location or in a laboratory. Pollutant identity and concentration is vital to the establishment of the nature and extent of air pollution problems and the effectiveness of control techniques being used. Assuming valid samples are obtained and proper analytical procedures employed, the analytical results become the vital link in the measurement-evaluation cycle.

Several analytical methods having potential applicability in the graphic arts industry were reviewed in the final report for Phase I. Two techniques were particularly suited to the objectives of Phase II.

Figure 6 (Appendix B) is a schematic diagram of the Cal-Colonial Chemsolve chromatographic flame ionization technique. If a sample had been collected into a container without a cold trap in the sampling train, it is first separated by means of a cold trap into condensible and non-condensible portions. Each portion is then oxidized to carbon dioxide (CO_2) and subsequently reduced to methane (CH_4). Therefore, the only organic introduced into the detector is methane, a fact which insures linearity of response. Results are reportable in parts per million methane, carbon monoxide (CO), carbon dioxide and total carbon.

An alternate method (Los Angeles APCD) is schematically shown in Figure 7 (Appendix B). Here, both condensible and non-condensible portions of the sample are catalytically oxidized to CO_2 and detected by infrared analysis. The results are similar to those outlined in the Cal-Colonial analytical method.

It had been noted in the Phase I final report that the Cal-Colonial method has three features which commended its use in the Phase II study. First, the scale of the sample size is compatible with conventional gas chromatographic components; second, the hydrogen flame detector is not flow dependent as is the non-dispersive infrared detector; and third, the prior reduction of all sample components to methane could provide a true carbon content analysis.

It was found, however, expedient to develop a somewhat modified analytical method involving the simultaneous use of a thermal conductivity and a hydrogen flame detector. With this technique, two injections are needed for cylinder content analysis (non-condensibles). Trap condensibles are analyzed separately using a flame ionization detector. One aliquot from the cylinder is separated on a 5Å sieve and detected by thermal conductivity. The other aliquot from the cylinder is resolved on a Poropak Q column, and the effluent is passed through both a thermal conductivity and hydrogen flame detector. Carbon dioxide and carbon monoxide are determined by thermal conductivity, and the organics by flame ionization.

The major accomplishment of the Phase II work, again, was the ultimate development of a simple and reliable field-tested, EPA-approved method of sampling and analysis of emissions from graphic arts processes and control equipment. Also, research activity was conducted with the purpose of defining problems, and provided a consistent means of evaluating the effectiveness of the different types of pollution control measures utilized by the graphic arts industry. Activity in this area was an integral part of the Phase II contract work.

4.2 Sampling and Analytical Technique

4.21 Summary

Early development of the sampling and analytical procedures to be used in the study of organic emissions were previously discussed. Subsequent field experience dictated certain modifications in sampler design and sampling technique sufficient to bring the method within acceptable limits of accuracy and precision.

As field work progressed during the months of January through April, 1971, it became apparent that the prototype integrated grab sampler designed in Phase I (Figures 4 and 5, Appendix B) lacked the efficiency necessary to condense and retain organics in the 1/8" diameter stainless steel trap. A sizeable percentage of organics was being swept into the cylinder where it could not be detected using the analytical techniques of CMUPML. Over a four-month period (January through April 1971) the following modifications were evolved to insure that all condensibles would be caught in the 1/8" stainless steel trap tube.

1. The probe and trap were combined into a single, easily handled unit, and the trap was lengthened to provide a longer low temperature path for the sample.

2. Glass wool was inserted in the trap just prior to the cylinder

in order to prevent the loss of any condensible organics that may not have condensed or been captured in the trap.

3. The dry ice was replaced by a slurry of dry ice and trichloroethylene to promote more effective cooling.

4. A 20-minute sampling period, using an initial flow rate of 20 cc/min, was selected as being optimum to adequately cool and catch sample in the trap.

A schematic representation of the modified sampling apparatus with material components is shown in Figure 8 (Appendix B). The final integrated grab sampler which was used during Phase II on commercial printing plants is schematically shown in Figure 9 (Appendix B) along with all material component parts.

In the analytical procedure, by virtue of the collection process described above, the organic portions of the samples are divided spontaneously into non-condensibles and condensibles. Condensibles are collected in the 1/8" diameter stainless steel probe-trap assembly.

Non-condensibles are contained in the cylinder and are analyzed by a modified Perkin-Elmer Gas Chromatograph, using two separate injections. One aliquot is passed through a 5Å molecular sieve. The packed column effects separation of oxygen, nitrogen, methane (CH_4) and carbon monoxide. Concentrations of CO are determined using thermal conductivity. Another aliquot is eluted with helium through a Poropak Q column, a thermal conductivity detector, and a hydrogen flame detector. Methane is first determined with the hydrogen flame detector activated, then (CO_2) is measured by thermal conductivity. Immediately after elution of the CO_2 peak, column flow through the Poropak Q column is reversed, and the organics content is determined by flame ionization.

The high CO_2 content characteristic of samples taken downstream from an afterburner required the use of a reduced size aliquot in a separate analysis. Normal dryer samples do not require the use of this reduced size aliquot in a separate analysis.

The trap, which contains the condensibles, is immersed in dry ice and connected through Swagelok fittings to an Aerograph G.C. equipped with a flame ionization detector. No column is used. The trap sample is allowed to warm to room temperature and vaporize at a rate which permits controlled attenuation of the electrometer signal. After the low-boiling organics have been measured, the trap is heated to 250°C at a controlled rate to vaporize high-boiling materials. An integrator with digital output is used to determine peak area.

4.22 Summary of Stack Gas Sampler Design Considerations

The stack gas sampler was originally patterned from a design of the Los Angeles Air Pollution Control District (APCD) (87). The unit illustrated in Figure 9 (Appendix B) can be considered a modified grap sampler, and consists of a stack probe, a dry ice-trichloroethylene refrigerated trap, and an evacuable cylinder with a valve between the trap and cylinder. The valve should be of good quality in order to maintain the high vacuum in the cylinder during transport from the laboratory to the sampling site and the sample in the cylinder when returning back to the laboratory. It should also be sufficiently sensitive to permit time-averaging of the sample over a 15-20 minute interval. A low cost Bourdon vacuum gage attached to the cylinder is helpful in controlling the sampling rate.

The size of the cylinder is dictated by the method which is used for the analysis of the trap sample. It is not practical to take aliquots of the trap sample, and thus its quantity is limited by the capacity of the analyzer. A cylinder of 300 ml capacity was selected for our use because the average range of organic compounds likely to be encountered for analysis is 10-10,000 ppm (88). As hydrocarbons this corresponds to about (0.01-10 mg)/300 ml of sample, which is a convenient range for introduction into a gas chromatograph.

As a further consideration, the internal volume of the sampler between the end of the probe and the valve of the cylinder should be as small as convenient. At the start of the test it will be filled with atmospheric air which is swept into the cylinder as a diluent of the sample. For the present sampler, assuming an approximate average trap-probe length of 60 inches, the air dilution in the cylinder is estimated to be 12 ml or 4 percent of the nominal volume, and is not included in any concentration calculations.

4.23 Stack Gas Sampler (Figure 9, Appendix B)

Cylinders. The basic member is a stainless steel Whitey cylinder, HDF4-300-304, with a nominal capacity of 300 ml. The lower end of the cylinder is fitted with a 2-1/2 inch Bourdon vacuum gauge, and a sensitive needle valve is mounted in the upper end. The side of the valve is fitted for attachment of the trap with the latter extending horizontally.

Since the interior volume of the sample cylinder must be known, each individual cylinder is calibrated using helium or nitrogen in a precision gas manipulating system.

Traps. The first devices which were constructed for condensing higher boiling components from stack gases consisted of two parts:

a double loop of stainless steel tubing (14 inches long) approximately 12 inches of which was immersed in the refrigerant, and a straight variable length of tubing (length dependent on stack dimensions) which entered the stack. The two pieces were joined by a silver soldered coupling. This design was then changed to a single piece of tubing having the same conformation as the two-piece assembly but without the coupling. The contents of the two-piece probe-trap required two analyses, since during sampling the silver soldered coupling and adjacent probe acted as a cold spot area which condensed high-boiling compounds. By simply combining the two pieces, the analytical effort was reduced by one-half and the elimination of the silver soldered coupling reduced significantly the error caused by this type of fitting. Generally, the redesign of the trap as a single piece construction proved to be very successful, and is easier to manipulate in the field.

The traps are constructed from a 1/8" O.D., 25-gauge 304 stainless steel tubing. At 3-1/2 inches from the cylinder end of the tubing, three flattened loops each 5-1/2 inches deep and 1-3/4 inches wide are formed by bending the tubing. The loops extend below the horizontal run of the tubing. The remaining 24 inches of tubing, except for a small semi-loop (see 3, Figure 9), formed to prevent contact of the Swagelok cap and slurry, continues the horizontal line from the cylinder and functions as the stack probe.

The result is a triple U-shaped loop centered 4-1/2 inches from the point of attachment to the cylinder, with a probe 20-24 inches long for insertion through the stack wall.

A small length of glass fiber is inserted into the cylinder end of the tubing to retain aerosols. Both ends of the traps are fitted with seals which prevent loss of sample during transport.

4.24 Sampling Procedure

A. Fully evacuate the cylinders of the sampling units before transporting to the sampling site. Check for leaks.

B. Locate a sampling site that is as free as possible from distortion or non-uniformity of flow. Normally, the sampling site should be at least eight stack diameters downstream from any bend, expansion, contraction or visible flame in the stack or flue, and at least two diameters upstream from any bend and/or obstruction (89).

C. Perform velocity and temperature traverses to determine gas flow rate and temperature variation across the stack at the sampling site. [If flow or temperature at this site is uniform (less than 10 percent variation) then proceed; if not, locate new sampling site.]

D. Check again for possible cylinder leaks. Prepare sampler for testing by removing all packing plugs (Swagelok cap body hex and Swagelok male connector nut-hex) and attach probe-trap assembly to cylinder.

E. Place trap in steel glass-lined Dewar flask and surround with slurry of crushed dry ice and tricholoroethylene. Caution should be exercised so that no packing caps (Swagelok cap nut hex) contact the slurry in the flask.

F. Insert probe into stack, locating probe tip at center of stack. Seal space around the probe with asbestos tape or other suitable material. If duplicate testing is being performed, locate samplers at a 90-degree angle to each other.

G. Open needle valve to approximate an initial flow rate of 20 cc/min.

H. Employ a 20-minute sampling period or sampling period of not less than 15 minutes unless otherwise restricted. Note sample interruptions, if any. In the event of process difficulties, shut sampler off immediately and resume sampling once process is on stream.

I. At completion of sampling period, close needle valve securely and withdraw probe. Plug both ends of probe-trap assembly tightly, making sure again that no packing caps or plugs contact the slurry in the Dewar flask.

J. Secure probe-trap assembly by tape or other means to sample cylinder for transportation to laboratory for analysis.

K. Repeat procedure for additional samples.

4.25 Total Sample Volume

The contents of both the cylinder sample and trap sample must be quantitatively related to the total volume of gas which constitutes the sample. The latter volume will vary with prevailing temperature and barometric pressure at the time the sample is taken. The geometric volume of each sample cylinder is known since it is measured before the cylinder is placed into service.

The chromatograph used for the gas phase analyses is equipped with a sample injection system in which the sample is introduced into an evacuated space equipped with a pressure gauge. The volume of the connection to the cylinder valve is variable.

The volume of the sample under standard conditions can be conveniently obtained by a double expansion from the sample cylinder into the evacuated sampling system of the chromatograph. The steps involved are:

1. The cylinder containing the sample is attached to the sampling system, and the sampling system is evacuated.
2. The cylinder valve is opened to the sampling system and the pressure, P_1, is read from the sampling system gauge.
3. The cylinder valve is closed, and the sampling system is again evacuated.
4. The cylinder valve is opened again, and the pressure, P_2, is read from the gauge.
5. The volume of the sampling system, V_{GC}, is obtained from the known volume of the sample cylinder, V_C, and the two pressure readings:

$$V_{GC} = \left(\frac{P_1 - P_2}{P_2}\right) V_C$$

6. The total quantity of gas originally contained in the sample cylinder is then:

$$V_{std} = (V_C + V_{GC})(P_1)\left(\frac{273.2}{T}\right)$$

where T is the absolute temperature in degrees (^oK) of the sample in the room

$T(^oK) = T_{Room}$ in degrees Centigrade (^oC) + 273.2 at the time P_1 (in atmospheres) is read.

hat V_C and V_{GC} are geometric volumes, whereas V_{std} antity of gas expressed as the volume of the gas andard conditions.

<u>der Sample</u>

ployed for the
er 154-C
nal

The carrier gas system is manifolded to permit rapid change from helium to argon (the latter is necessary for samples containing hydrogen). The inlet pressure is controlled by a sensitive pressure reducing valve. The absolute flow rate is controlled by a regulator (Moore, Model 63BU-L) referenced by an upstream adjustable impedance (Foxboro). A flow impedance (laboratory constructed) with a by-pass valve is employed to damp the small flow oscillations induced by the regulators.

Within the instrument, the carrier gas flows first through the reference side of the thermal conductivity detector and then through the sampling valve (shown in the sample injection position). From the sampling valve, the carrier gas passes to two valves either of which can route the carrier through an attached chromatographic column. The second column position includes a third valve which may be used to reverse the carrier flow direction. From the outlet of the second column position, the carrier gas flows through the sample detection side of the thermal conductivity detector. Finally, from this point, it flows to a hydrogen flame detector. The latter also requires hydrogen and compressed air service.

Introduction of a sample begins with the valve plunger in the position alternate to that in the drawing (i.e., moved to the right). The two carrier gas lines are then directly connected within a single "compartment" of the valve and the sample inlet line, pressure gauge (the valve to the pressure gauge is normally open), sample loop and vacuum line (the valve to the vacuum pump is normally closed) are interconnected. The sample holder is attached, and the vacuum valve is opened until the gauge indicates full pump-down. The vacuum valve is closed. Sample is introduced under the control of the valve on the sample holder.

The sample is injected by moving the six-port valve to the left position (as shown in Figure 10, Appendix B). The carrier gas thereupon sweeps the sample into the chromatograph.

The volume of the sample loop and the two associated valve compartments have been calibrated (a group of sample loops with effective volumes from 0.250 to 5.000 cc is available).

Since the geometric volume, pressure and temperature (ambient) of the sample are known, the volume of the sample under standard conditions can be calculated.

After the sample has been injected into the carrier gas, it is swept through whichever column has been valved into the flow

pattern. The components of the sample elute from the column, separated according to specific retardations that the column effects.

The column effluent next passes through the sample side of the thermal conductivity detector (Perkin-Elmer No. 154-1009). This detector employs thermistors as the sensing elements. It has been mounted in a very stable thermostat held at 32°C. At this temperature the sensitivity is excellent (circa 2×10^4 mv-ml/mg).

Power for the thermal conductivity bridge circuit is provided by a Video Instruments Company, Inc. voltage regulated supply Model SR-200 EM to which has been added an external LC filter.

The thermistors of the thermal conductivity detector are two legs of a simple, conventional bridge which includes balancing potentiometers.

The signal from the thermal conductivity detector is fed to an Infotronics Model GRS-11AB/HS Integrator with digital output. From the integrator, the signal is returned to a Leeds and Northrup 1 mv full scale recorder with a binary attenuator.

After passing through the TC detector, the carrier gas and sample components are led through a surge-damping valve to a Perkin-Elmer Model 154-0410 hydrogen flame ionization detector. The signal from this detector is conducted first to its electrometer, then to the Infotronics integrator and finally to the recorder.

In general, the print-out of the integrator is used for quantitative analyses. The recorder trace is used primarily to follow the course of the analyses while they are in progress.

B. Cylinder Contents

The cylinder contains the components of the stack gas which at their particular partial pressures are not condensed at dry ice temperature. These include the nitrogen, oxygen, argon and trace gases of the atmosphere, carbon monoxide (CO), carbon dioxide (CO_2) and methane. It will also contain vapors of organic compounds which were not condensed by the cold trap.

The Los Angeles APCD requires analysis for the carbon monoxide, carbon dioxide, methane and "organics" which are present in the cylinder gas.

C. Analytical Procedure

When earlier work was done, the least satisfactory of the procedures developed for analyzing stack gas samples was for the organics in the cylinder samples. The analysis requires a reversal of the direction in which the carrier gas flows through the chromatographic column. If the reversal is omitted there can be no assurance that detection is complete. However, intolerable base-line displacements frequently occurred when the column in use was reversed. A satisfactory analysis was achieved by a change in column geometry. The 19-1/2 feet x 1/4 inch column packed with Poropak Q which is specified in the Los Angeles APCD procedure (87) was shortened to 6 feet. This was possible since the determination of carbon monoxide (CO) is now being made in the laboratory by a separate injection on a 5 Angstrom unit (Å) molecular sieve column. Reversal of the shorter Poropak Q column induces a base-line disturbance which is acceptable.

For the analysis of the cylinder sample, two columns are mounted on the chromatograph. At position No. 1, a 4 feet x 1/4 inch stainless steel column packed with 19.7 g. 40/50 mesh 5Å molecular sieve adjusted to 3 w/w percent water content is attached. At position No. 2, a 6 feet x 1/4 inch stainless steel column containing 14 g. 80/100 mesh Poropak Q which has been degassed under vacuum at 160°C is attached. Both columns are operated at ambient temperature.

The separation on the Poropak Q column is carried out first. This column is valved into the carrier gas flow with the molecular sieve column by-passed. The sample which remains in the 4 ml sample loop after the determination of total sample volume (see section 4.25 on "Total Sample Volume") is injected into the chromatograph. With the hydrogen flame detector activated, the methane peak is the first to be detected and integrated. This peak is incompletely separated from CO but the latter elicits no response from the flame detector.

Detection is then shifted to the thermal conductivity detector for the elution of the CO_2 peak. For samples taken downstream from an afterburner, which contain high CO_2 content, a separate analysis is made using a smaller sample.

The direction of carrier gas flow through the Poropak Q column is reversed immediately after the CO_2 has eluted, and detection is shifted back to the hydrogen flame detector. This configuration is maintained throughout the elution of "organics" and until the recorder has returned to base-line.

CO is measured by a separate analysis in which the molecular sieve column is valved into the carrier flow path and the Poropak Q column is by-passed. The CO is detected with the thermal conductivity detector.

Calibration of the hydrogen flame detector is made with methane and of the thermal conductivity detector with CO and CO_2 respectively.

4.27 Analysis of the Trap Sample

A. Instrumentation

The measurement of the trap contents is executed with an Aerograph Model 204-1B gas chromatograph with an Infotronics Model CRS-11 AB/HS integrator interfaced between the electrometer and the recorder. This instrument provides a greater dynamic range of operation plus added convenience in accommodating trap length than a chromatograph originally used in GATF's study.

Only one of the dual hydrogen flame detectors is used for the analyses (there is no column "bleed" which requires balancing). The trap is mounted external to the oven of the chromatograph. A short length of 1/8 inch stainless steel tubing is connected at the normal inlet to the detector and, by appropriate bending, brought out of the oven to one side. The short horizontal run of the trap is attached to it with a tubing union. Helium at 20 ml/min from the flow control system of the chromatograph is introduced at the end of the long horizontal run of the trap by means of 0.070 inch O.D. Teflon tubing.

The trap is heated by low voltage-high amperage current passed directly through the 1/8 inch stainless steel tubing from which the trap is constructed. The current is supplied from a 0.55 kw 110:17 stepdown transformer which is powered from a 2 kva variable autotransformer.

B. Analytical Procedure

The procedure for an analysis starts with immersion of the coiled section of the trap in dry ice-trichloroethylene until the sample is fully condensed. Without withdrawing the trap from the refrigerant, the two caps are removed from the trap and it is "spliced" into the helium flow pattern. The temperature of the trap is then increased step-wise, first by exchange of the dry ice for ordinary ice and then by raising the electrical power

input. The rate of vaporization must not exceed a linear detection rate.

For calibration of the detector, 10 microliters (μl) of n-heptane is placed in a trap and frozen with dry ice. It is injected into the chromatograph in the same manner as a sample except that the trap temperature is not raised above -16°C (initially 0°C, see Addendum, PML 71-40 and 72-229, Appendix F). The delivery from the syringe has been tested gravimetrically and is better than ± 2 percent. The 10 microliter injection of n-heptane is equivalent to 10.65 ml CO_2. The integrated output from the hydrogen flame detector is about 35,000 Kilo counts/ml equivalent CO_2.

C. Trap Contents

In reporting the trap analyses, an arbitrary distinction is made between "low boilers" and "high boilers". The "low boilers" consist of the total integrated signal obtained while the trap temperature is allowed to rise to ambient temperature (refrigerated in dry ice first, followed by ordinary ice, and finally warmed to ambient temperature). The "high boilers" consist of the total integrated signal obtained during the electrical heating of the trap above ambient to approximately 250°C.

4.28 Cylinder and Probe-Trap Maintenance

A method for cleaning and general maintenance of the GATF stack samples prior to re-use is as follows:

A. Cylinders

1. Evacuate cylinders on a high vacuum system.
2. Flush cylinders with three volumes of dry air.
3. Heat cylinders with a hot air gun (Heat-Blo Model 750X) while flushing with three volumes of dry air.
4. Evacuate cylinders until a maximum pressure of 0.1 micron is obtained in the vacuum system manifold.
5. Close the needle valves of the cylinders.
6. Record the readings of the cylinder vacuum gauge readings.
7. Compare the vacuum gauge readings after 48 hours with the recorded readings to determine if leakage is occurring.

B. Stack Probe-Trap (or probes)

1. Rinse the probes with 50 ml of perchloroethylene in a ventilated hood.
2. Pass nitrogen through the probes at the rate of 70 ml/min until dry.

3. Continue the nitrogen flow, and heat the probes by passing a low voltage-high amperage current (other heating methods can be used) directly through them, increasing the voltage to yield, approximately, 80°C temperature rise increments within at least ten minute time intervals until a final temperature of 250°C is reached.
4. Rinse the probe's body hex capping sections three times with perchloroethylene in a ventilated hood, and then dry at 120°C.

Cylinder leakage usually occurs at threaded connections or from scored needle valves. A "Comco" teflon pipe thread seal (available from Commercial Plastics, 2022 Chateau Street, Pittsburgh, Pa. 15233, $1.65 per 1/2 in x 540 in roll) has been found very effective in eliminating thread connection leaks. Other commercially available thread sealing means (i.e., silver solder, etc.) can also be used.

The probe's end-seals (Swagelok caps) must be inspected after each use. Due to over tightening of the probe's Swagelok caps, "crimping" or "necking" of the 1/8 inch stainless steel probe tubing directly ahead or under the front ferrule of the Swagelok cap, or stretching and splitting of the Swagelok cap's body hex may occur, and leakage of probe-trap contents during or after sampling can result.

Another organic solvent, depending upon the stack probed and material sampled, may be substituted in the probe-trap rinsing process. If available, ultrasonic cleaning of the probe-trap can also be used.

The cleaned sampler units, probe-traps and cylinders, should be subjected to periodic instrumental analysis to check for possible contamination. The frequency of analysis would, of course, depend upon the total sampling time involvement, sampling environment, and material sampled. In our studies, sampling units are checked every fourth or fifth cleaning.

The stack probes and cylinders are always identified by a numbered tag, and a service record for each sampler unit component part is maintained.

4.29 Cost Analysis

Representative cost data for both the GATF sampling equipment and analytical time and instrumentation are presented in this section. A sampler unit (or "unit") is defined here as a sampler cylinder with fittings plus the probe-trap assembly. Where possible, equipment suppliers are indicated.

TABLE 3

Component Cost of GATF Sampling and Support Apparatus

A

Part	Cost/Unit*	Supplier
1. Angle type needle valve (Ideal)	7.00	Dietrich and Associate 90 Clairton Boulevard Pittsburgh, Pa. 15236
2. Swagelok, male connector, brass	1.00	Pittsburgh Valve and Fitting Co. 49 Mead Avenue Pittsburgh, Pa. 15202 (Bellevue)
3. Swagelok Caps (2), brass	1.00	Pittsburgh Valve and Fitting Co. 49 Mead Avenue Pittsburgh, Pa. 15202 (Bellevue)
4. Whitey cylinder, type 304-SS (300 cc)	22.00	Pittsburgh Valve and Fitting Co. 49 Meade Avenue Pittsburgh, Pa. 15202 (Bellevue)
5. 1/4 in-1/8 in Hex reducing nipple	1.00	Pittsburgh Valve and Fitting Co. 49 Meade Avenue Pittsburgh, Pa. 15202 (Bellevue)
6. U.S. Vacuum Gauge (0-30 in) 2-1/2 in dia. 1/4 in male NPT	4.00	Lappe Supply Company 855 - 24th Street Pittsburgh, Pa. 15203
7. Stainless steel seamless tubing, 1/8 in O.D. 0.020 wall (25 ga), 1 piece 60 in long	4.00	Williams & Company 901 Pennsylvania Avenue Pittsburgh, Pa. 15233
Total	40.00	

B

1. Support stand apparatus	4.00	Fisher Scientific Company Alpha Drive Pittsburgh, Pa. 15238
2. Chain clamp	5.00	Same as above
3. Clamp holder	1.00	Same as above
4. Clamp versatile	3.00	Same as above
5. Flask (thermos, steel Dewar), pint capacity	18.00	Same as above
Total	31.00	

*Rounded off to nearest dollar

A. The Sampler

The component cost of the GATF field sampling unit as described in this report is shown in Table 3A. Table 3B shows the cost of the total sampler unit support apparatus. The procurement of the components and their assembly was undertaken by GATF. The construction time for one sampler unit is approximately 0.5 man-hours.

B. Sample Analyses

The cost of cylinder calibration and leak-testing is shown for four sets of cylinders in Table 4, contingent upon the fact that appropriate vacuum equipment for surface area determinations was available for use.

TABLE 4
Cost of Cylinder Calibration and Leak Test

Cylinder in set (No.)	Average Time per Cylinder (hrs)	Average Cost per Cylinder ($)
6	1.75	30.80
2	2.5	44.00
10	1.45	25.52
8	1.38	24.29
Average/cylinder	1.58	27.78

The cost of analysis for a single stack sample has varied over a range of about 25 percent. For the analysis of stack gas samples, the set-up time including instrument calibration is significant. Sets of seven to eight samples tend to a minimum since they can be analyzed with a single set-up and instrument calibration. The total organic content of the traps is a time controlling factor since the hydrogen flame detector has an upper concentration limit for linear response. The separation of the trap contents into high and low boilers extends the analytical time. The time for cylinder and trap maintenance prior to reuse has also varied somewhat depending upon the nature of the previous stack samples.

Average costs for web offset sample analyses are listed in Table 5. Each entry shows the average cost of analysis and the average cost of an analysis plus the maintenance of the trap and cylinder.

The basic laboratory rate was found to be $11.00 per man-hour plus 60 percent overhead, or a total of $17.60 per man-hour.

TABLE 5
Average Costs for Web Offset Sample Analyses

	Hours per Sampler Unit	Cost per Sampler Unit ($)
Uncontrolled Web Offset		
Analysis	2.60	45.76
Analysis and maintenance	3.31	58.26
Uncontrolled Web Offset		
Analysis	3.18	55.97
Analysis and maintenance	3.83	67.41
Controlled Web Offset		
Analysis	3.55	62.48
Analysis and maintenance	4.11	72.34
Controlled Web Offset		
Analysis	3.37	59.31
Analysis and maintenance	3.89	68.46
Average: Uncontrolled Web Offset		
Analysis	2.89	50.86
Analysis and maintenance	3.57	62.83
Average: Controlled Web Offset		
Analysis	3.46	60.90
Analysis and maintenance	4.00	70.40

Note: The uncontrolled web offset trap samples were not separated into high and low boilers (estimated additional analytical time about one man-hour at an additional cost of $17.60) whereas the controlled trap samples were.

C. Gas Chromatography

The two chromatographs which have been used for analysis of the stack samples are fully described in the previous sections. As this report indicates, the two commercial instruments have been significantly modified.

The present cost of commercial chromatographs range from about $3,000 to $12,000. In general, ancillary equipment will be required. A chemist experienced in gas chromatography can probably set up a facility to duplicate the procedures we are using at a cost of $20,000 ± $5,000.

D. Summary

The average sampler unit cost including all component sampling equipment and analyses and maintenance time is $136.00. This figure does not represent GATF component procurement and sampler construction time nor the sampler unit support apparatus.

4.3 Appraisal and Summary

The field sampling equipment is not cumbersome and is very rugged. It avoids the hazard always present with evacuated glassware. The stainless steel gas cylinder and the tube fittings, although expensive, are justified by the reduced labor cost of assembly (0.5 man-hours).

The time for analysis of sampler content is relatively short (3 to 4 man-hours) and compares favorably to other methods. The response of the hydrogen flame detector is more affected by chemical composition than is an infrared detector. However, the flame detector is insensitive to moderate flow rate changes whereas the response of the infrared detector is inversely proportional to flow rate.

4.4 Experimental

4.41 Introduction and Summary

A laboratory test was performed to insure proper operation of the grab samplers and to evaluate the accuracy of the method. Known hydrocarbon concentrations were found to be in excellent agreements with experimentally measured values. Under laboratory conditions the sampling and analytical techniques were shown to be accurate. It was determined that a twenty-minute sampling period using an initial flow rate of 20 cc/min was suitable in providing adequate trap sample cooling time.

EPA personnel conducted isokinetic sampling at a web offset plant, attempting to determine if the exhaust stream contained significant amounts of particulates (condensed organics) which would invalidate the use of grab sampling techniques. (Isokinetic sampling occurs when the gas stream velocity entering the sampling nozzle equals the stack gas velocity immediately surrounding the nozzle.) If the stack exhaust contained sizable particulates or condensed matter, isokinetic sampling

would be necessary to obtain a representative sample. Problems incurred during this test with non-uniform velocity profiles and an organics concentration gradient along with problems in the analytical work, make specific conclusions difficult. However, results from this test along with the repeatability of grab samples, lack of condensation on probes inserted into the stacks, and duplicate samples obtained with probe oriented in various directions, indicate that particulates (if present) are not large or numerous enough to rule out grab sampling methods. At the same time, the limited study conducted under this program, suggests that the use of presently available isokinetic sampling train in the graphic arts industry requires further investigation.

The GATF grab sampling and analytical methods previously described were used to conduct a large number of field tests from web offset and metal decorating plants. Although flow rates and emissions from these operations are relatively constant for a given job, considerable variation existed between dryers, ovens, and jobs. Table 6 summarizes the ranges of data obtained during the study.

TABLE 6
Range of Analytical Results from Samples of
Web Offset and Metal Decorating Processes

	Range of Values				
Operation	Flow Rate (scfm)	Total Organics (ppm)	CO (ppm)	CO_2 (ppm)	CH_4 (ppm)
Web Offset*	1400-9300	2-2641	n.d.-711	2105-42453	1-246
Metal Decorating**	900-7400	1-21684	n.d.-1259	321-43629	7-1733

*Includes samples from the operation of the dryer only, and from paper, coated and uncoated, passing through the dryer without printing.

**Includes samples from the operation of the oven only.

4.42 Preliminary Studies

A. Filling of Cylinders

A flowmeter capable of measuring rates between 0 and 90 cc/min was used to monitor the filling of sample cylinders under vacuum. The object was to determine the initial rate necessary to provide a filling time of 15 and 20 minutes. It was found that with an initial flowmeter reading of 36.75 cc/min all cylinders tested filled within 15 minutes, and with an initial flowmeter reading of 20 cc/min, the cylinders tested filled in 20 minutes. Valve settings were notched on the cylinders for reference in the field.

Figures 11 and 12 (Appendix B) show the relationship between gauge pressure and time,and were used in the field to monitor filling.

A plot of flow rate versus time, (Figures 13 and 14, Appendix B) made for a 15-minute sampling period, showed that 49 percent of the sample was collected during the first five minutes, 35.9 percent during the next five, and 15.1 percent during the last five minutes. When a 20-minute sampling time was used, 56 percent was collected during the first seven minutes, 33 percent during the next seven minutes, and 11 percent during the last six minutes.

For four samplers, pressure and flow rate readings were taken after eight minutes filling time. The results are tabulated below (Table 7):

TABLE 7
Pressure and Flow Rate Reading for Four Samplers
After Eight-Minutes Filling Time

Cylinder No.	Filling Time (min)	Gage Pressure (in)	Flowmeter (cc/min)
1	8	6.2	4.0
2	8	6.5	4.0
3	8	6.5	4.0
4	8	6.2	4.0

It can be seen that for the cylinders tested, filling characteristics are essentially constant.

B. Temperature of Probe

In the initial sampling method, it was necessary to heat that section of the probe which was not inserted into the stack (see Figure 3, Appendix B) in order to preclude condensation of vapors. The exposed length of probe was wrapped with a flexi-heating tape and controlled by a variable transformer (Variac). The Variac was calibrated by plotting dial setting (volts) against air temperature inside the probe. Temperatures were measured with a chromel-alumel thermocouple. A plot of Variac setting versus temperature is given in Figure 15 (Appendix B).

During the initial course of this study, since condensible material was found collecting in the probe despite the use of the heating tape during sampling, the use of the heating tape was discontinued and the stack probe and trap were constructed from a single piece of tubing allowing the simultaneous analysis of both the trap and probe.

4.5 Preliminary Field Studies

A. Plant Test Code No. MD-P-1

On January 19, 1971 the first sample was obtained under the Phase II contract. This, in conjunction with planned future samples, were to be used to assess the effectiveness of our chromatographic technique as applied to metal decorating emissions. Sufficient plant data to characterize the process under study was obtained. This is given in Appendix E, MD-P-1.

A sample of exhaust from the coating line was collected at about 2:00 pm. The sampling unit was mounted in a ring stand and secured with clamps. The entire assembly was then positioned on the equipment carrying case such that the probe lined up with an existing hole in the stack. This sampling site was free of any flow distortion and appeared to follow good sampling location principles.

The probe was inserted so that the tip was situated approximately in the center of the stack. The heating tape, which surrounded that section of the probe exposed to the air, was heated for ten minutes at 500°F, prior to drawing the sample. As an expedient measure, the trap was immersed in dry ice. It was noted that dry ice should be taken into the field when there is any doubt as to its availability near the site.

Ambient temperature at the testing site was 0°F with a 15-mile per hour wind effectively producing a wind-chill factor on the order of -10 to -20°F.

Because of a brief interruption in the coating operation, it was necessary to collect the sample in two stages, of three and seven minutes duration respectively, two minutes between the two periods. Thus, the 10-minute sampling time consumed twelve minutes.

Sample MD-P-1 was analyzed by gas chromatography for CH_4, CO, CO_2 and total organics. The results are also given in Appendix E, MD-P-1. It should be noted that an error in an equation used by CMUPML in calculating results has decreased the reported calculated total sample volume and increased calculated organic content presented on the data sheets in Appendix E (see PML-72-24, Appendix F, for extent of change).

B. Plant Test Code No. 1-MD

In order to gain familiarity with the original testing equipment and to insure the adequacy of sampling and analytical procedures,

preliminary field tests were conducted at a metal decorating plant. Information was obtained on coating thickness, solvent composition, production rate, emission velocities and temperatures, etc. Five samples were collected and analyzed for CO, CH_4, CO_2, and total organics. For two of the three coating processes studied, flow rates were calculated in actual cubic feet per minute and then standardized.

Duplicate sets of samples were obtained from the metal decorating plant. One set was sent to Cal-Colonial Laboratories in California for analysis and the other set was analyzed by Carnegie-Mellon Institute Physical Measurements Laboratory (CMUPML) in Pittsburgh, Pa. Comparisons were made between the reported results of the samples from these two laboratories.

Certain difficulties were encountered in the sampling procedure, and some modifications appeared warranted at that time. Although it was tentatively concluded that the analytical technique employed by CMUPML could give precise results, further testing was necessary.

The results of this source test, along with background information on the plant and process, including the original report from Cal-Colonial and CMUPML, are given in Appendix E (refer to Plant Code No. 1-MD). Again, an error in the equation used by CMUPML in calculating results has decreased reported sample volume and increased calculated organic content (see PML-72-24, Appendix F for extent of change).

The data on Sheets #3-ECD-A and B (Appendix E) suggest that certain unexpected complications are present in the sampling method, at least for metal decorating emissions. These merit some discussion.

MD-P-2 and MD-P-3 were collected simultaneously using a single probe. The probe was securely wound with heating tape, and was heated to a temperature of 215°C as measured under static laboratory conditions (see Figure 15, Appendix B). Considering the solvents used in this process, it was expected that the temperature would be sufficient to preclude condensation of vapor in the probe. Examination of the results of MD-P-2 and MD-P-3, however, showed that a total of 1414 ppm organics condensed in the probe. It was, therefore, concluded that it would be necessary to include the probe in all future sample concentration determinations.

MD-P-3 gave a much higher trap analysis than did MD-P-2. This was attributed to a bias in the sampling configuration,

favoring MD-P-3. A schematic of the two samples, attached to a common probe through a modified "T" is shown in Figure 16, Appendix B. It was decided that any additional duplicate samples would be collected using separate probes.

In both sets of duplicate samples, Cal-Colonial reported considerably higher cylinder concentrations than CMUPML. Compare, for example, a cylinder organic concentration of 278 in MD-P-4 with one of 7.0 ppm in MD-P-3. Since the practice at Cal-Colonial Laboratories is to heat the cylinder prior to injection of sample into the gas chromatograph, it appeared that the low values obtained cy CMUPML resulted from failure to vaporize the condensate. The discrepancy between the two analyses meant that all of the high boiling components were not being caught in the trap. To remedy this, it would have been necessary to resort either to a longer trap or to a trap which has been packed with high surface area material, or to a lower trap temperature.

It is known that a sample rich in oxygenated compounds, when subjected to analysis via flame ionization detection, tends to give low results unless put through oxidation (CO_2) and reduction (CH_4) stages prior to detection. It seemed likely, therefore, that analyses obtained from CMUPML would be lower (although perhaps not significantly so) than those obtained from Cal-Colonial. Comparison of trap samples for MD-P-4 and MD-P-5 shows that this was not the case. Tentatively, then, it was concluded that the analytical method employed by CMUPML was sufficiently accurate to warrant its continued use.

C. Plant Test Code No. 1-WO

A preliminary field test was conducted at a web offset plant to gain familiarity with the web offset process and to insure the adequacy of sampling and analytical procedures as applied to this process. Ten samples were collected and analyzed for CO, CH_4, CO_2, and total organics. The results of this test are given in Appendix D, 1-WO, along with background information about the plant and about the specific graphic operations involved. (Please note error in reported total sample volume and calculated organic contents, PML 72-24, Appendix F.)

Samples No. 11 and No. 12 (see Data Sheet #3-ECD-A, Appendix D) were collected as duplicates and sent to different laboratories. Of interest here is the discrepancy between the two analyses. For the cylinder concentration, CMUPML reports 4 ppm, Cal-Colonial reports 120 ppm. The difference, as previously suggested, is apparently due to the fact that Cal-Colonial heats the cylinder prior to analysis whereas CMUPML does not. It was also stated that a solution to this problem was the use of a

more efficient packed condensible collection trap to insure against carry-over of condensibles into the cylinder.

Trap concentrations reported by the two laboratories are comparable but a wide discrepancy exists between probe concentrations. The value obtained by CMUPML is seven times greater than the Cal-Colonial results. One possible explanation for this difference was that although the probe itself was heated to an estimated 250°C in the Cal-Colonial analytical method, a short section of capillary connecting the probe to the chromatograph was maintained at a considerably lower temperature. It seems likely that the high boilers in the probe condense out on this relatively low temperature surface and are, therefore, not detected by the Cal-Colonial method.

Samples Nos. 9 and 10 were also collected as duplicates and sent to different laboratories. The results and conclusions are comparable to those given above.

Samples Nos. 7 and 8, collected over a 5-second and 5-minute interval, respectively, and Nos. 6 and 3, collected over a 0.5-minute and 1.0-minute time interval, respectively, indicated that sampling time may be a factor in reported results. Variation in total organics with time could be attributed to increased carry-over of undetected condensibles into the cylinder at faster sampling rates. This could be remedied by using a more efficiently packed condensible collection trap.

In samples Nos. 4 and 5, only paper was flowing through the press. As expected, organic values were low. In sample No. 4, both CO_2 and organic (trap) concentrations appeared anomalous. The anomaly was explained by the presence of a leak detected in the soldered joint of the sampler.

Samples Nos. 3 and 6 were taken with the oven on and no paper flowing. Organic values are the lowest of any of the tests conducted.

Based upon the preceding discussion, conclusions, and results from MD-P-1, 1-MD and 1-WO field tests, and considering the carry-over of condensible portions of the gas sample into the sampling cylinder, several possible corrective actions were decided upon. First, trap length then set at 24 inches could be lengthened to 36 inches; the trap tube diameter of 1/8 inch could be increased to accommodate 1/4 inch tubing; packing of the trap could be employed if needed; the trap could be immersed in dry ice-Methyl Cellosolve or trichloroethylene as opposed to

just crushed dry ice, and finally, the probe could be considered as part of the trap during analysis.

It was decided to pack the 1/8 inch trap with glass wool and ceramic beading and to consider the trap and probe as a single unit for analysis since condensible material was collecting in the probe despite the use of a heating tape during sampling. The use of the heating tape was discontinued, and by following this recommended procedure, the need to analyze the probe and trap separately was eliminated.

With regards to the relative comparability of analytical results from the two independent laboratories (CMUPML, Cal-Colonial), assuming both received similar samples and assuming that sampling procedures employed were as uniform and consistent as possible, it could be expected that reasonable agreement would occur between laboratories for measured quantities of gases in excess of 100 ppm and that smaller quantities (in the range of 30 ppm) might show significant deviation. However, considering the type of analysis required in this study and the fact that no established standards existed upon which to base the analysis, no conclusions could be determined.

D. Plant Test Code No. 2-WO

Modifications developing from previous preliminary plant tests were employed, and plant tests conducted under code No. 2-WO were used to explore the effects of these modifications on the sampling results. Twelve samples were collected from two web offset presses having direct flame drying on April 12, 13, 14, 15, 1971. The samples were analyzed for CO, CH_4, CO_2 and total organics. The results of this test are presented in Appendix D, 2-WO. (Please note error in reported total sample volume and calculated organic contents, PML 72-24, Appendix F.)

The following samples were collected in duplicate: Nos. 1 and 13; 3 and 12; 2 and 14; 6 and 10. The data for No. 2 is invalidated by the fact that the glass-lined Dewar flask containing dry ice and the sampler trap was found broken. The low value is probably due to organic carry-over into the cylinder.

Samples Nos. 4 and 8 were collected simultaneously. In No. 4 the front of the probe was oriented perpendicular to the gas stream, and in No. 3, it was parallel (e.g., the circular cross-section of the probe was parallel and perpendicular, respectively, to the effluent gas stream lines). Since the difference between results are no greater than those differences already reported, and taking into consideration gas stream turbulence possibilities,

various sampling biases that may result from different probe orientations, and general efficiency of field sampling procedures, it was decided that a straight probe (perpendicular to the gas stream) would be preferable to a bent configuration (parallel to the gas stream). Later conversations with Dr. J. D. Carruthers of Ambassador College Press, Pasadena, California, further substantiated this final decision on probe configuration.

Samples taken from the operation of the dryer only (Nos. 14 and 15) did not show significant reduction in emission rate. This was particularly true in the case of No. 14 which should be compared with Nos. 3 and 12. It seemed possible that the results were due to a high residual concentration of condensed organics on the walls of the stack. It should be noted that methane values for Press A are lower than Press B, suggesting that in the Press A dryer more efficient mixing of air and fuel resulted in better combustion.

Samples Nos. 6 and 10 had glass beads in their traps along with the glass wool normally used, and the analytical results indicated that the traps packed with glass wool functioned as efficiently as those packed with the additional glass beads.

4.6 Stack Simulator Study

A stack simulator experiment was performed inclusive of a complete mass balance to ascertain the effectiveness of our sampling and analytical methods. This experiment is described in detail in Appendix F, reports dated July 27, 1971 and May 1, 1972, investigation No. PML-71-17.

Generally, in the preliminary experiment a large volume of a static mixed gas sample was prepared containing known volumes of air, methane, butane, and cyclohexane at atmospheric pressure and ambient temperature. The air, methane and butane concentrations were determined in advance. The methane concentration approximated that encountered in previously sampled web offset printing operations utilizing heatset inks. The cyclohexane concentration corresponded to the equilibrium vapor concentrations at the ambient conditions. In later studies water pumped nitrogen was substituted for the air, methane, butane carrier gas. Samples of the emission were collected at various filling rates using the same GATF apparatus as employed in the field.

The overall objectives of the tests were to determine: (1) the efficiency of the trap using sampling periods ranging from five to thrity minutes, and (2) the accuracy of the analytical method.

Analysis of the trap samples from the first stack simulator tests indicated that during the two-hour sampling period the concentration of cyclohexane in the gas stream was increasing as a function of time. Since the simulator was obviously not functioning properly these initial trap results were invalidated and more experimental data was needed.

Several other tests were run to establish that the measured quantity of cyclohexane in the trap actually equaled that delivered. However, it was not until a modification in design was introduced that a cyclohexane balance could be obtained.

In the finally utilized test analysis, the average total hydrocarbon content as CO_2 of the sampling apparatus, 0.5210 ± 0.0032 V/V%, was compared with the calculated hydrocarbon content, 0.535 ± 0.016 V/V%; and it was found to be within a standard deviation of the calculated hydrocarbon content of the flow in the stack simulator.

4.7 Comparison of Isokinetic Sampling With GATF Integrated Grab Sampling

4.71 Introduction

In order to further substantiate that the GATF integrated grab sampling technique was reliable and to determine if possibly the exhaust stream contained significant amounts of particulates (condensed organics) which would invalidate the use of grab sampling techniques, the Environmental Protection Agency (EPA) requested that GATF conduct an experiment to compare GATF's method of sampling with the widely-used and commonly accepted method of isokinetic sampling. Isokinetic sampling is recommended (proportional sampling is required) when the gas flow rate and pollution output rate is not steady, and required when the gas stream contains particulates or condensed matter (e.g. hydrocarbons in either a solid or liquid state). Isokinetic sampling is a sampling condition established when the velocity of the gas stream entering the sampling probe or nozzle equals the stack gas velocity immediately surrounding the probe or nozzle.

EPA's emission testing branch was of the opinion that isokinetic sampling might be necessary for the graphic arts industry, and therefore, was desirous of evaluating the method. A comparison test was planned in which both integrated grab samples and isokinetic samples would be collected from a web offset emission source. Therefore, two samples were taken isokinetically in the field at one source with a modified impinger train to 1) see if the results from those samples and ones obtained concurrently with the GATF method were of the same order of magnitude, and to: 2) try to determine if the results indicated that any organics were being emitted in the form of particulates at that particular source under the particular set of operating conditions in effect at the time of sampling.

4.72 Experimental

A. Sampling and Analysis of a Web Offset Emission Using the Isokinetic Method (by EPA Personnel)

On June 23, two samples were collected isokinetically at a web offset plant by three representatives of the Emissions Source Testing Division of EPA. The objective, again, was to determine whether or not isokinetically collected samples yielded results comparable to those obtained using the GATF procedure, a constant volume controlled variable rate method, and whether, perhaps, any organics were being emitted as particulates (solid or condensed liquid) at the source and under the process conditions being evaluated. Each isokinetic sampling apparatus consisted essentially of three components: (1) a probe with a 1/8" button-hook probe tip, (2) a series of four Greenburg-Smith impingers immersed in a dry ice-trichloroethylene slurry, (3) a GATF gas sampler (placed in series after the fourth impinger) to gauge efficiency of collection of the impingers.

For the two isokinetic samples, three equal areas were utilized in the 32-inch diameter stack, and samples were collected at six points from two locations 90 degrees to each in the duct. The samples, therefore, covered 12 collection points each of five-minutes duration, or a total 60-minutes sampling time.

The components were delivered to CMUPML immediately after collection. It should be noted that there were at least five interruptions during collection of the first isokinetic sample due to web breaks, bearing failure, and register problems. The second sample was collected in one hour without interruption.

Upon delivery of the samples to CMUPML, the condensed phase was transferred by passing nitrogen through the impingers over a trap immersed into liquid nitrogen. Although most of the condensed phase was transferred into the trap, an oily residue remained in the impingers. This was eventually removed using a volatile organic solvent, and then analyzed.

The analytical method used in determining organic content of these isokinetic samples was reported by CMUPML and is presented in Appendix F (PML-71-23) along with an analysis report of the GATF samples taken at the exit port of the isokinetic sampling train (PML-71-223). EPA data and calculation sheets are also included in Appendix F. A summary of the results is presented in Table 8.

B. Sampling and Analysis of Web Offset Emission Using the GATF Method

While isokinetic sampling was in progress on June 23, 1971, three samples were obtained using the GATF method. Each

sample was collected over a 30-minute period, using an initial flow rate of 15 cc/min. In all cases, the probe was positioned accurately at the center of the stack perpendicular to the gas flow. The trap was immersed in a slurry of dry ice-trichloroethylene to insure adequate cooling.

TABLE 8

Analytical Results (Isokinetic Sampling)

Cylinder No.	1	2
Date Collected	6/23	6/23
GATF Cylinder Content (ppm as CO_2)		
CO	0.00	0.00
CO_2	5093	4879
CH_4	16	16
Organics	9	12
GATF Trap Organics (ppm)	204	72
EPA Trap Organics (ppm)	821*	1287*
Total Organics	1034	1371

*Calculated assuming that the reported organics had an average molecular weight equal to n-heptane, and therefore, $C_7H_{16} + 11O_2 = 7CO_2 + 8H_2O$. Total volume of dry gas sample No. 1 is 18.57 scf (standard cubic feet) and of dry gas sample No. 2 is 22.01 scf [both at 70°F (21°C) and 29.92 in Hg (1atm pressure)].

On the following day, June 24, 1971, duplicate samples were collected under conditions identical with those above. A total of five samples were obtained on the process under study.

A report on the analysis of the five stack gas samples are presented in Appendix F (PML-71-222), and is summarized in Table 9.

The precision of the method based upon four samples (one sample was invalidated due to a power failure at time of the sampling) seemed adequate for determinations of total organics in web offset emission studies. Organic concentrations in the cylinder were low, and indicated that essentially all of the condensible organics were being retained in the trap.

The amount of organic material collected during this test was higher than samples collected at this same location by GATF personnel in March 1971 (see 1-WO, Section 4.5, C and Appendix D). The March 1971 samples were taken at a location downstream from the present GATF-EPA sampling location where the flow pattern was relatively uniform across the stack's cross-section (see Data Sheet #5-ECD, Appendix D, 1-WO). The March 1971 CMUPML total organics (ppm) results were similar to the present isokinetic total organics (ppm) results (see Section 4.72, A). Although actual ink usage figures were not available, plant

personnel roughly estimated that the percentage of ink usage was greater on the June sampling date than on the March testing date (approximately 19 lb/hr, June and 14.5 lb/hr, March).

TABLE 9
Analytical Results (GATF)

Cylinder No.	1	5	7	11	18
Date Collected	6/24	6/23	6/23	6/23	6/24
Content (ppm as CO_2)					
CO	0.00	0.00	0.00	0.00	0.00
CO_2	4198	4906	2848	4587	4993
CH_4	15	17	9	17	18
Organics (cylinder)	11	10	7	15	12
Traps	2194	2012	2641	1429	2692
Total Organics	2205	2022	2648	1444	2704

The trap data for Sample No. 11 must be suspected due to a series of electrical power failures during the analysis.

Of the four valid analyses, the average total organic content is 2395 ± 334 ppm (standard deviation expressed as a percentage = 13.9 percent). Samples Nos. 1 and 18 were collected as duplicates.

4.73 Discussion of Test Results

In summary, using the GATF sampler, four 300 cc samples were collected from the dryer exhaust of a commercial web offset high ink coverage press run (five-color, perfecting). In all cases the probe was positioned at the center of the duct approximately 15 feet downstream from the dryer. The average concentration of organics in the exhaust as sampled by GATF and determined by gas chromatography was 2395 ppm. Duplicate isokinetic samples were also collected using standard procedures. A train consisting of four Greenburg-Smith impingers immersed in a dry ice and trichloroethylene slurry was used to trap the condensate. A GATF sampler was attached to the fourth impinger (five collectors in series) to gauge efficiency. An average total organic concentration of only 1203 ppm was obtained, including the contents of the GATF trap, for the isokinetic samples.

Two possibilities for the discrepancy between methods were considered.

1. The procedure required for quantitatively recovering the condensate in the impingers and measuring it gravimetrically was tedious and subject to error through evaporation. It was concluded that the isokinetic results were most probably low.

2. The four values obtained using the GATF method, while in good agreement with one another, appeared to be high compared with expected results based on knowledge of the process under study. The question arose as to whether there might not be a concentration gradient in the duct, having a maximum value in the center and falling off near the walls.

   If a concentration gradient existed, it would not affect the isokinetic values since portions of the sample would be taken and weighted at various points in the duct, and, therefore, would constitute an approximate average sample. In contrast, the GATF method of sampling at a single point in the center of duct, where concentrations would most likely be highest, would tend to give high results.

4.8 Gradient Studies

In order to resolve the possibility that a concentration gradient existed across the stack cross-section used in the test comparison of the GATF sampling technique with the isokinetic sampling technique, and to further substantiate the fact that the GATF sampling method would provide representative samples when emission flows and temperatures are found uniform across a stack cross-section, two gradient studies were conducted.

In the first study, grab samples were to be taken at the same plant and duct location the GATF-isokinetic samples were taken. On October 11, 1971, after experiencing some delay in conducting the test due to a problem of scheduling a high ink coverage process job that would closely parallel or duplicate the original experimental conditions, GATF testing personnel completed the additional sampling at the original isokinetic testing site. Flow and process data is shown in Appendix F, Data Sheet #5-ECD along with the CMUPML-72-232 describing the analytical results for these samples. The results are also summarized in Table 10 below.

Duplicate samples were collected at three points in the stack, and analyzed for total organics. One sampling point was located within each of three concentric equal areas of the stack as required in conducting a velocity traverse. The recorded gas velocity head and subsequently calculated gas velocity suggested the possible presence of some bend, impediment, or other structural restriction in the stack. There was no noticeable temperature variation across the stack's cross-section, and the calculated flow rate was very nearly equal to the flow rate recorded during the June 23, 1971 isokinetic test.

TABLE 10

Gradient Study at a Site With Irregular Flow

Equal Area	Distance of Probe Tip From Stack Wall (in)	Total Organics (ppm as CO_2)	Point No.
1 (near wall)	1-7/8	26	B-1
	1-7/8	153	A-1
2	4-11/16	848	B-2
	4-11/16	972	A-2
3 (center)	16	897	B-4
	16	903	A-4

The data showed that in the equal area nearest the wall of the duct, the organic concentration was considerably lower than in the other two-equal areas, thus establishing the existence of a gradient and accounting for the high values obtained in the isokinetic sampling-GATF sampling comparison test.

Upon further investigation, a structural impediment, (a damper), was located only a few feet upstream from the point of sampling. The impediment was undoubtedly responsible for the highly irregular flow pattern indicated by the pitot tube velocity survey. It should be also noted that, since the sampled stack is under negative pressure, there is a distinct possibility that the concentration gradient could have been caused by air in-leakage into the stack at the sampling location.

In a second gradient experiment an ideal sampling site was chosen, approximately 40 feet downstream of a dryer where no irregularities in the duct work existed. As expected, a regular flow pattern (steady and uniform) was observed. Duplicate samples were collected at two points in the duct and analyzed for total organics. One sampling point was located within each of two concentric equal areas of the duct as required.

This sampling site was located in plant coded No. 3-WO. The background data and analytical results for the sampling performed at this plant are shown in Appendix D, 3-WO. Samples Nos. 17 and 18 (see Data Sheet #3-ECD-A, 3-WO, Appendix D) were collected by inserting the probe four inches into the stack. Samples Nos. 19 and 20 were collected from the same process line and job with the probe inserted 12 inches into the stack. The same pattern of sampling was used for samples Nos. 21, 22, 23, 24. Samples Nos. 20 and 22 were discarded.

Table 11 shown below, summarizes the results of these samples taken at the two points across the stack's diameter. The organic

values given are average values for the samples taken in duplicate at the previously mentioned sampling points.

TABLE 11

Gradient Study at a Site with Regular Flow

Test No.	Distance of Probe Tip From Stack Wall (in)	Total Organics (ppm)
1	4	617
1	12	605
2	4	1111
2	12	916

From this additional experiment, it was concluded that the organic values within the experimental error, were relatively uniform across the duct and that no concentration gradient existed.

Two conclusions were drawn or reinforced from the gradient studies:

1. It seems that isokinetic sampling, because of the length of time involved in the collection procedure, the lack of particulates in the gas stream, the general presence of uniform flow rates and uniform emission and emission's physical characteristics across a stack's cross-section somewhere in a stack's length, and the demanding error-prone nature of organic wet analysis, in the form used in this study, is not adequate for the study of organics from commercial presses. However, since only two isokinetic samples were taken during this study more extensive investigations would be required to evaluate the necessity for and usefulness of ioskinetic techniques for the graphic arts industry.

2. Grab samples are most representative of the process when taken from a well-mixed uniform flow rate gas stream.

In the absence of concentration gradients, integrated grab sampling is a simple and effective technique for determining the total organic content of an emission. In the presence of concentration gradients, multiple grab samples should be collected in a pre-determined number of equal areas in order to assure representative sampling of the process. Sampling at locations where structural impediments produce a distorted

velocity profile or where infiltrated air creates a concentration gradient should be avoided. It should be noted here that the presence of an uneven velocity profile will mean that the concentrations obtained at the various sampling points will have to be weighted with respect to the measured relative velocity at each sampling point so as to be able to calculate a true average exhaust pollutant mass emission rate. Sampling should be conducted only at a point of uniform flow and good mixing so as to allow a greater assurance that the sample obtained will be representative of the process under evaluation.

4.9 Efficiency of Trap

An attempt was made to determine the degree of efficiency for collection of organics by the trap used in the GATF sampler. This determination involved looking over all the data collected from both web offset and metal decorating samples, stack simulator experimental results (as reported previously in section 4.6 and in Appendix F, PML-71-17), and a test for condensates in GATF sample cylinders, (PML-72-230, Appendix F).

The variables that could affect efficiency of organics entrapment are shown for web offset in Table 12 (Appendix C), and metal decorating in Table 13 (Appendix C), arranged against calculated trap efficiencies. Trap efficiency as defined in these tables and other tables in this report is determined by the following equation (a):

$$\text{(a)} \quad \text{Trap Efficiency (\%)} = \left[1 - \frac{\text{cylinder organics (ppm)}}{\text{total organics (ppm)}}\right] \times 100$$

$$= \left(\frac{\text{trap organics}}{\text{total organics}}\right) \times 100$$

Outlet samples from emission control units are also noted by asterisks in Tables 12 and 13.

Those factors affecting entrapment are total organics present in the sample, percentage of high and low boilers (see section 4.27, C, for definition of high and low boilers) making up the sampled organics, and sampling time.

Sampling time was chosen after many field sampling trips to be most optimum at 20 minutes (20 cc/min). The time values on both Table 12 and Table 13 do not indicate a concrete dependence of efficiency of organics entrapment and length of sampling time period. However, it has been determined from field experience that a too fast sampling rate may cause rapid build-up of organics in specific areas of the trap with resultant "clogging" of the trap and subsequent prevention of sampling.

There seems to be a definite dependency of trap efficiency to both total organics and the percentage of high-boilers present in the

sample. Generally, the higher the high-boiler percentage and the higher the total organics sampled, the higher the sampling trap organics collection efficiency (and vice versa). It should be noted that outlet samples from emission controlled units (i.e., incinerators) have the lower percentages of high boilers and the highest percentage of low boilers. It should also be noted, especially in Table 13 for metal decorating samples, that there seems to be an independence of high-boiler percentages and the concentration level of total organics sampled upon the efficiency of organics entrapment. There appears to be a point when, even though the trap sample contains a low percentage of high-boilers, the presence of certain concentration levels of total organics will yield a high level of trap organics collection efficiency.

The previously discussed stack simulator experiment (see section 4.6 and Appendix F, PML-71-17) showed a high trap collection efficiency for organics under laboratory conditions. Another laboratory study, "Test for Condensates in GATF Sample Cylinders", PML 72-230, Appendix F, indicated that high-boiling organics were not passing through the trap into the cylinder portion of the GATF stack sampling apparatus. As shown on page 3 of PML-72-230, there was a high-boiling residue present in tested cylinders which was also present in cylinders never previously used for sampling purposes. It was concluded that the high-boiling organics or residue in the cylinder has a low vapor pressure at ambient temperature, and would not contribute to previous values reported for cylinder analysis. The residue is probably present in all cylinders, used and unused, and is contributed by materials and the methods used to manufacture the cylinders.

In conclusion, GATF's sampler (trap and cylinder) and method of sampling was found to be very adequate for sampling both condensible and non-condensible organics from web offset and metal decorating processes during the Phase II contract period. The efficiency of the sampler trap in collecting condensible organics was, for most cases, very high.

5.0 TREATMENT OF EXPERIMENTAL SAMPLING DATA

5.1 Introduction

In order to comprehensively review and digest the field data for both the web offset lithographic and metal decorating processes, an understanding of the manner in which the data for the above mentioned processes was recorded, tabulated, calculated and reported is essential. Previous sections of this report have dealt with a description of the sampling apparatus, the procedure involved in sampling as well as a complete description of the analytical procedures utilized in the program.

5.2 Data Sheets (Forms)

Data sheets were designed and developed throughout the program to record test data meaningful to the conduct of the source sampling program. Specifically, these data sheets were numbered 1-ECD through 5-ECD and were as follows:

Data Sheet #1-ECD - Source Location and Sample Background Data
Data Sheet #2-ECD - Physical and Operational Plant Data
Data Sheet #3-ECD - Effluent Sampling Data
Data Sheet #4-ECD - Visible Emissions Evaluation
Data Sheet #5-ECD - Gas Velocity Data

Sample forms of the above mentioned data sheets can be found in Figures 17 through 21 in Appendix B. As work proceeded, several forms underwent revision and the evolution is presented. For example, 18a, 18b, and 18c (Appendix B) represent revisions of Data Sheet #2-ECD (Figure 18, Appendix B). Additionally, Figure 19a represents a revision of the form shown in Figure 19 (Data Sheet #3-ECD); Figure 21a, a revision of the form as illustrated by Figure 21, (Appendix B).

5.3 Data Sheets (Description)

5.31 Data Sheet #1-ECD (Source Location and Sample Background Data)

This data sheet provided information on the process to be sampled, type of equipment utilized, stack geometry and any additional data that would be pertinent to understanding the process under evaluation. All data pertaining to a specific plant was included with the plant code number assigned (item 4 of this and subsequent data sheets). The numbering process utilized was simple and direct. Each web offset plant was numbered consecutively as tests were performed. Thus, 1-WO signified the first web offset plant in the study. In all, nine web offset plants were evaluated. Similarly,

metal decorating operations were coded 1-MD, etc. In all, seven metal decorating plants were evaluated. A copy of this data sheet can be found in Figure 17 (Appendix B).

5.32 Data Sheet #2-ECD (Physical and Operational Plant Data)

This data sheet provided information of physical measurements (temperature, pressure, etc.) as well as the operational data on the process. For web offset, operational data consisted of speed, type of paper and percent ink coverage, the type of data necessary to adequately correlate emissions to process parameters. The data sheet was designed also to accommodate the operational data for metal decorating, thus satisfying a two-fold function. The nature of the data being generated necessitated that this data sheet undergo several revisions as illustrated by Figures 18a, 18b, and 18c (Appendix B).

5.33 Data Sheet #3-ECD (Effluent Sampling Data)

This data sheet contains specifcs on the collection of the sample: the time over which the sample was collected, probe length and depth of insertion, and description of collection point. With the abandonment of the heating tape and variac and the subsequent refinement of the sampling procedure, the data sheet was revised to include observed smoke density and odor as well as any special notes such as interruptions in the sampling period. A copy of this data sheet can be found in Figure 19a (Appendix B).

5.34 Data Sheet #4-ECD (Visible Emissions Evaluation)

This form recorded smoke density readings and is typical of those used by control agencies for visible emission evaluation. When the form is properly utilized, the operation of a particular piece of equipment (press oven, dryer, etc.) can be effectively evaluated for visible emissions. Included in this visible emission evaluation besides that of smoke (shades of gray expressed as Ringelmann numbers) is equivalent opacity (any colored emission). These readings are recorded as percentages (No. 1 equivalent to 20 percent, No. 2 equivalent to 40 percent, etc., and correspond to appropriate Ringelmann numbers). A copy of this data sheet can be found in Figure 20 (Appendix B).

5.35 Data Sheet #5-ECD (Gas Velocity Data)

On this data sheet were recorded velocity head readings during a velocity traverse, gas temperature and atmospheric pressure for subsequent use in flow equations as shown in the lower left hand

corner of the form. An average actual gas velocity is calculated and converted to standard cubic feet per minute (scfm). A copy of this data sheet can be found in Figure 21 (Appendix B).

5.4 Arrangement of Data

Appendices D and E contain data recorded accordingly for the web offset lithographic plant studies as well as metal decorating. Appendix D is arranged in a numerical coded sequence utilizing the plant code number for web offset studies; i.e., 1-WO, 2-WO, 3-WO, etc. Similarly, Appendix E is arranged in a numerical coded sequence utilizing the plant code number for metal decorating operations; i.e., 1-MD, 2-MD, 3-MD, etc.

The number of data sheets utilized per plant test varies significantly. As a minimum, each plant test will contain Data Sheets Nos. 1-ECD, 2-ECD, 3-ECD and 5-ECD. Each may also contain three additional data sheets, Nos. 3-ECD-A, 3-ECD-B and 3-ECD-C, summaries of analytical results, and in tabular form other calculated data as appropriate. For each plant evaluated there is the laboratory report on the analysis of all samples taken at that plant.

In certain cases, those with air pollution control equipment, additional tabulated data (Data Sheet #3-ECD-D) will appear. This data sheet tabulates the calculated hydrocarbon conversion efficiency at various incineration temperatures.

At some of the plants evaluated in this program, additional sampling was performed with detector tubes from a Universal Testing Kit. These measurements are tabulated on Data Sheet #3-ECD-E.

Also appearing in several test data packages is an evaluation of moisture as determined in the effluent stream. This data, however, was confined to a limited number of plants and, therefore, its occurrence throughout the various numbered tests will be minimal.

On limited occasions and where conditions permitted, smoke density readings were taken. These readings were recorded on Data Sheet #4-ECD and may be found in several of the plant tests.

In summary, all plant tests have been coded for easy reference. The plant code number will be utilized throughout the discussion in this report. As can be noted, the data is voluminous, however, every attempt has been made to simplify, reduce and report the significant findings of these various tests.

5.5 Development of a Test Program

So as to be able to conduct a systematic, pre-planned program for the evaluation of the various process variables associated with web offset and the metal decorating operations, test programs were established prior to the conduct of on-site field studies.

5.51 Web Offset Publication Printing Test Program

A test program was developed for web offset publication printing (see Table 14, Appendix C) which considered the important variables in a web offset operation. It was decided that information should be obtained on the effect of press speed, ink coverage, paper quality and combustion products of the dryer; any of these factors may have an effect on the nature and extent of the emission. In addition, studies would be conducted of the web offset operation which utilized thermal incineration and catalytic incineration equipment in control of this process.

A summary of the tests run and the number of samples obtained for each set of conditions is shown in Table 14 (Appendix C). In all, five web offset plants (Plant Code Nos. 3-WO to 7-WO, inclusive (Appendix D) were utilized in the test program for web offset. Specifically, Plant Code No. 3-WO (Appendix D) covers the evaluation of direct flame hot air drying system, while Plant Code No. 4-WO (Appendix D) covers the high velocity hot air drying system. These two plants comprised the work performed under the section entitled "Uncontrolled Source", Table 14 (Appendix C) of the test program. Plant Code Nos. 5-WO and 6-WO (Appendix D) constituted the test of thermal incineration in control of the web offset operation. Plant Code No. 7-WO constitutes the test of catalytic incineration in control of web offset operations. These latter plants comprised the work performed under the section entitled "Controlled Source", Table 14 (Appendix C) of the test program.

5.52 Metal Decorating Test Program

Similar to that for web offset, a test program was developed for metal decorating (Table 15, Appendix C) which considered the important variables in this operation.

It was decided that information should be obtained on the effect of combustion products of the oven, ink coverage and more importantly, the various weights of coatings utilized; any of these factors which may have an effect on the nature and extent of the emission. Generally, the types of coating materials in use by the metal decorating industry consist of: vinyls, acrylics, alkyds,

oleoresinous and phenolic lacquers. An attempt was made to evaluate as many of these coating materials as consistent with the limitations of the program.

A summary of the tests run and the number of samples obtained for each set of conditions is shown in Table 15 (Appendix C). Four metal decorating plants (Code Nos. 2-MD to 5-MD, inclusive (Appendix E) were utilized in the test program. Specifically, Plant Code Nos. 2-MD and 3-MD (Appendix E) cover the evaluation of the process with particular emphasis on evaluating types of coatings applied. These two plants comprised the work performed under the section entitled "Uncontrolled Source, Table 15, (Appendix C) of the test program. Plant Code No. 4-MD (Appendix E) relates to the evaluation of a thermal incineration system in control of the metal decorating operation. Plant Code No. 5-MD (Appendix E) relates to the evaluation of catalytic incineration in control of the metal decorating operation. These latter two plants comprised the work performed under the section entitled "Controlled Source", Table 15 (Appendix C) of the test program.

5.6 Basis for Calculations

The following sections deal with the many calculations performed in this study. It should be emphasized that several of the equations developed have limited applicability to the particular process under consideration and thus, should be considered in that manner. Further, it should be noted that these equations are solely based upon findings and determinations made by the environmental field testing staff in the conduct and evaluation of the field studies and thus, should be utilized with this understanding.

It remains, therefore, that in order to obtain an understanding of the results as presented in several subsequent sections of this report, the reader must generally grasp how those results were obtained. This section will attempt to outline the calculational methods used and to define significant terms used in discussing the data.

5.61 Calculation of Observed Emissions

Two major factors enter into the calculation of the observed emission rate referred to throughout this report as E_{obs}, namely, the effluent gas flow rate (expressed as standard cubic feet per minute at 60°F and 29.92" Hg) and the organic concentration of the gas stream (expressed from laboratory analysis as a volume to volume percentage as carbon dioxide, V/V% as CO_2). The measurement of the effluent gas flow rate and the subsequent calculation of the

flow rate have been discussed in the prior Phase I Final Report (1), a calculation of which appears on Data Sheet #5-ECD as previously stated. Therefore, no further description will be presented. Likewise, the method for determining the organic content of the gas stream has been thoroughly covered in Section 4.0 of this report. The above referenced material is suggested as background for those generally not familiar with the procedures of sampling and analysis.

The goal of the sample calculation that follows below is to develop an equation which relates the organic emission rate (expressed in pounds carbon per hour) to the flow rate of the gas stream and to its organic content.

Assume the following operational data:

1. Total organics expressed as a volume to volume percentage as carbon dioxide (V/V% as CO_2) equals 0.2135 percent.

2. Flow rate of effluent gas equals 3.6×10^3 standard cubic feet per minute (scfm).

Calculation:

(1) 0.2135 V/V% as CO_2 is converted to ppm as CO_2

$$\frac{.2135}{10^2} = \frac{X}{10^6}$$

$$X = \text{ppm} = 2135 \text{ microliters per liter } \left(\frac{\mu L}{L}\right)$$

$$1 \mu L = 10^{-6} L$$

(2) The flow rate in standard cubic cubic feet per minute is converted to liters per minute.

$$3.6 \times 10^3 \frac{ft^3}{min} \times 28.2 \frac{L}{ft^3} = 1.02 \times 10^5 \frac{L}{min}$$

(3) Since there are 2135 ppm* $\left(\frac{\mu L}{L}\right)$ organics (as CO_2) in the gas stream), this amounts to an hourly emission of:

$$1.02 \times 10^5 \frac{L}{min} \times 60 \frac{min}{hr} \times 2135 \frac{\mu L}{L} = 1.31 \times 10^{10} \frac{\mu L}{hr}$$

$$= 1.31 \times 10^4 \frac{L}{hr}$$

(4) At standard conditions [1 atm, 15.5 degrees Centigrade (°C)], the number of grams (g) of CO_2 is:

$$g\ (CO_2) = \frac{M.W. \times P \times V}{RT} = \frac{44 \times 1 \times 1.31 \times 10^4}{.082 \times 288.7} = 2.43 \times 10^4 gm/hr$$

*1ppm is equal to a microliter of organics per liter of sample.

where M.W. = molecular weight of CO_2 = 44
P = pressure in atmospheres (atm)
V = volume in liters
R = universal gas constant = 0.082 $\frac{(L)\ (atm)}{(degree)\ (mole)}$
T = absolute temperature degrees Kelvin (^oK)
$^oK = {}^oC \pm 273.2$

(5) Since the M.W. of carbon is 12, the above relationship can be expressed as:

$$\frac{12}{44} \times 2.43 \times 10^4 = 6.64 \times 10^3 \text{ gm carbon/hr}$$

$$6.64 \times 10^3 \times \frac{1}{454 \frac{gm}{lb}} = 14.7 \text{ lb carbon/hr emitted as organics}$$

(6) The calculation for the observed emission rate can be simplified by combining all of the conversion factors and multiplying by the determined scfm and ppm:

(a) $$E_{obs} = 1.90 \times 10^{-6} \times \text{scfm} \times \text{ppm}$$

where E_{obs} is the observed emission rate in pounds carbon per hour (lb C/hr)

Having developed equation (a), this now affords a simple means of calculating various emission rates, and more importantly, of converting the data to a common workable denominator.

Alternate Solvent Emission Calculation:

It may be necessary due to state or local regulations that a basis of calculation be chosen other than the pound carbon approach that has been taken in this report. It is certainly felt that expression of the results in a common denominator such as pound carbon per hour (# C/hr) would be more meaningful to regulatory bodies throughout the country and every attempt should be made to express to them the usage of this expression of data. If, however, in the interpretation of the law, the authorities desire that the findings be expressed as pound hydrocarbon solvent per hour, a molecular structure or carbon (C) and hydrogen (H) content will have to be determined or assumed for the solvent.

To illustrate the conversion from pounds of carbon per hour to pounds of hydrocarbon solvent per hour, the following sample calculation is provided:

The solvent is assumed to be paraffinic with a general formula C_nH_{2n+2}. The ratio of solvent weight to carbon content is as follows:

$$\frac{n(C) + (2n + 2)\ (H)}{n(C)}$$

C = carbon molecular weight = 12
H = hydrogen molecular weight = 1

Thus, the ratio can be expressed as follows:

$$\frac{12n + 2n + 2}{12n} = \frac{14n + 2}{12n} \cong 1.17$$

Since n values generally will be greater than eight for hydrocarbon heatset solvents, and the assumed paraffinic structure provides the maximum solvent-carbon ratio, the constant value of 1.17 can be assumed with an error of less than two percent. Thus, heatset hydrocarbon solvent emissions can be determined by multiplying the carbon emission rate by 1.17.

Brief consideration should be given at this point to the matter of significant figures utilized throughout calculations in this study. In any computation involving approximate numbers, the position of the decimal point as well as the number of significant digits (or significant figures) is important. The reader should take note that the calculated flow rate (recorded as scfm) is expressed as two significant digits with an estimated third digit. This is based on the fact that the least number of significant digits, in this case two, occurs in the measurement of the velocity head (manometer reading) in the performance of the velocity traverse and subsequent calculation of flow.

However, the organic content of the gas stream (recorded as a volume to volume percentage as carbon dioxide) is expressed as four significant digits. When approximate numbers are multiplied or divided as in equation (a), Section 5.61, the result is expressed with the number of significant digits identical to that of the least accurate number. In this report, the number of digits used for every value reflects the accuracy. Thus, the number of significant digits in the emission rate reflects the limiting measurement of the velocity head. Thus, the

observed as well as calculated emission rates, expressed throughout the report as "lb carbon per hour" will appear as two significant digits with an estimated third.

5.62 Calculation of Material Inputs

So as to be able to compare organic outputs with inputs, thus, establishing an approximate material balance for the process under evaluation, it was found desirable to develop a relationship which would permit the calculation of the pounds of organic material actually introduced into a given process. Ideally, such a relationship would involve a minimum of process parameters whose magnitude could be readily or easily determined.

Thus, two equations were developed — one for web offset publication printing, the other for metal decorating — both of which satisfy the criterion stated above.

A. Web Offset Publication Printing (Calculated Emission Rate)

The calculated emission rate for web offset expressed throughout this report as E_{calc} can be stated as follows by equation (b):

(b) $$E_{calc} = S_f (I \times P) + R$$

The terms utilized in equation (b) have the following significance:

S_f = The fractional solvent concentration of the ink. Generally, this value ranges from 0.3 to 0.4, or 30 percent to 40 percent by weight of the ink taken as solvent. Calculations utilized throughout this report are based on a 40 percent solvent (by weight) unless otherwise stated.

I = The ink usage rate (coverage) expressed in pounds per impression. An impression is defined as a completely inked sheet or folded booklet, depending on product; coverage is that calculated value relating the total quantity of ink used for the total impressions run. Therefore, the calculated coverage value as utilized by this study is inclusive of all printing units utilized whether the job is two-color or four-color perfecting or non-perfecting.

P = The press speed expressed as impressions per hour.

R = The residual organics emission exhaust observed, expressed as lb carbon/hour, which is present during the operation of the dryer with unprinted paper, coated or uncoated, passing

through it. Samplings conducted throughout this program indicate this background emission may range from 0.5 to 3.5 lb carbon per hour.

$S_f (I \times P)$ = pounds solvent per hour $\cong$ pounds carbon per hour

Equation (b) permits the calculation of the rate of organics emission (expressed as lb carbon/hour) which would be present if all the solvents passed unchanged through the dryer without loss; i.e., E_{calc} represents the maximum possible organics emission rate.

B. Metal Decorating (Calculated Emission Rate)

The calculated emission rate for metal decorating operations expressed throughout this report as E_{calc} can be stated as follows by equation (c):

$$\text{(c)} \quad E_{calc} = S_f \left[\frac{D \times s \times t}{1000 \times 453.6\ (1-S_f)}\right] + R$$

The terms utilized in equation (c) have the following significance:

S_f = The solvent fraction (by weight) in coating

D = The sheet area expressed in square inches (sq in) per sheet

s = The coater speed (sheets/hr). This speed has been calculated on the following basis:

s = sheets/min x 60 min/hr x 0.95,

where

0.95 is a factor determined from operational experience to allow for time necessary to change skids.

t = The essentially dry film weight applied expressed as milligram per square inch (mg/sq in).

1000 = Conversion factor (1000 mg = 1 gram)

453.6 = Conversion factor (453.6 gm = 1 lb)

$1-S_f$ = The solids fraction (by weight) in the coating

R = The residual organics observed and derived from the oven operation expressed as lb carbon/hour. Samplings conducted throughout this program indicate this

background emission due to the oven may range from 0.2 to 1.0 lb carbon per hour.

$$S_f \left[\frac{D \times s \times t}{1000 \times 453.6 \times (1-S_f)}\right] = \text{pounds solvent per hour} \cong \text{pounds carbon per hour}$$

Equation (c) permits the calculation of the rate of organic emission (expressed as lb carbon/hr) which would be present if all the solvents passed unchanged through the oven without loss; i.e., E_{calc} represents the maximum possible organic emission rate assuming that all solvents are hydrocarbons. Since it is recognized that oxygenated solvents are widely employed, it should be noted that equation (c) will overestimate the pounds of carbon emitted per hour. Since the coating solvents always consist of mixed solvent systems no explicit corrections factor is practical.

5.63 Significance of the Material Balance

Equation (a) as discussed in Section 5.61 permits the calculation (for both the web offset and metal decorating operations) of the actual or observed emission rate expressed in pounds carbon per hour. Equations (b) and (c) (Section 5.62), depending on the process, provide the means for determining the maximum possible emission rate also expressed in pounds carbon per hour.

Having developed these relationships of the material inputs and outputs of the process, it is possible to present and define a term which will be of considerable utility in later discussions in this report. This is the so-called "C" factor and is defined as the ratio of the observed emission rate (material output) to the calculated emission rate (material input) and is expressed as follows as equation (d):

$$\text{(d)} \qquad {}^{*}C = \frac{E_{obs}}{E_{calc}}$$

"C" now becomes that fraction of the total organics used in the process and actually emitted to the atmosphere. Conversely, "1-C" becomes that fraction of organics which can be assumed to be converted in the dryer or oven to carbon dioxide and water and/or retained in the paper as residual solvent, and/or in some other manner held unaccountable. Thus, the organic conversion factor for a particular drying system or for that matter a particular process material input (various coatings, etc.) becomes "1-C". This latter term "1-C" will be referred to in the report as the conversion factor. Its utility will lie in the fact that it can be used to assess the effectiveness of dryers and ovens in combusting/converting organics. This relationship will be encountered frequently in the ensuing discussions.

*The "C" value is based on the ratio of an experimentally determined number (E_{obs}) and an approximate calculated number (E_{calc}). The interpretation of the accuracy of the "C" value should reflect the significant digits of the measurements. (See Section 5.61, p. 84.)

5.7 Calculation of Control Equipment Organic Conversion Efficiency

In those web offset and metal decorating processes operating with emission controls, the efficiency of the control equipment was determined. By sampling both the gas entering and leaving the control equipment simultaneously, and dividing the outlet organic concentration (expressed in ppm), by the inlet organic concentration (also express in ppm), the percent residual (unconverted organics) is calculated. This value subtracted from 100, equals the percent conversion efficiency. It should be noted here that conversion efficiency refers to percent organic material converted to CO_2 and H_2O; this term should not be confused with "combustion efficiency". The formula that was utilized to calculate the various incinerator efficiencies is as follows [equation (e)]:

$$\text{(e)} \quad \% \text{ efficiency} = 100 - \frac{\text{outlet Conc}_{ppm} \times 100}{\text{inlet Conc}_{ppm}}$$

5.8 Sample Calculations

Sample calculations are presented for a web offset field test, a metal decorating field test,and a calculation of the efficiency for a given piece of control equipment.

A. Web Offset Field Test - Sample Calculation

The following data was selected from Plant Code No. 3-WO (Appendix D) for this calculation:

Cylinder No.	Total Organics (ppm)	Flow Rate (scfm)	Organic Emission (lb carbon/hr)
7	1589	3900	11.7
8	1747	3900	12.9

The above samples were taken from press No. 1 of a 4-color, 1-web process job on coated stock, at a press speed of 18,000 imp/hr and with a coverage of 0.0024 lb/imp. Solvent content of the ink (by weight) = 0.40.

$$E_{obs} = \frac{11.7 + 12.9}{2} = 12.3 \text{ lb carbon/hour}$$

$$E_{calc} = S_f\,(I \times P) + R = 0.40\,(0.0024 \times 18{,}000) + 2.0$$
$$= 0.40\,(43.2) + 2.0 = 17.3 + 2.0$$
$$= 19.3 \text{ lb carbon/hr}$$

$$C = \frac{E_{obs}}{E_{calc}} = \frac{12.3}{19.3} = 0.63$$

1-C (fraction of organic converted) = 1.00 - 0.63 = 0.37

B. Metal Decorating Field Test - Sample Calculation

The following data was selected from Plant Code No. 2-MD (Appendix E) for this calculation:

Cylinder No.	Total Organics (ppm)	Flow Rate (scfm)	Organic Emission (lb carbon/hr)
10	4917	2300	21.6
13	4949	2300	21.8

The above samples were taken from a white alkyd coating line, 9.6 mg/sq in (41 percent solvent content) on a sheet size of 869.4 sq in and a coater speed of 68 sheets/minute.

$$E_{obs} = \frac{21.6 + 21.8}{2} = 21.7 \text{ lb carbon/hour}$$

$$E_{calc} = S_f \left[\frac{D \times s \times t}{1000 \times 453.6 \times (1-S_f)}\right] + R$$

$$= 0.41 \left[\frac{869.4 \times (68 \times 60 \times 0.95) \times 9.6}{1000 \times 453.6 \times 0.59}\right] + 1.2$$

$$= 0.41 \left(\frac{869.4 \times 3876 \times 9.6}{1000 \times 4536 \times 0.59}\right) + 1.2$$

$$= 50.0 + 1.2 = 51.2 \text{ lb carbon/hour}$$

$$C = \frac{E_{obs}}{E_{calc}} = \frac{21.7}{51.2} = 0.42$$

Effectiveness of the oven in converting organics becomes 1-C or 1.00 - 0.42 = 0.58.

C. Calculation of Percent Efficiency for Incineration Studies

The following data was taken from code No. 5-WO (Appendix D) for this sample calculation:

Cylinder No.	Process Description	Total Organics
1	Inlet to control equipment	1919
2	4-color, 1-web, coated stock, press speed of 14,000 iph	1920
7	Outlet of control equipment at $T = 1300^{o}F$	14
8		23

$$\% \text{ Efficiency} = 100 - \left[\frac{\text{outlet conc ppm}}{\text{inlet conc ppm}}\right] \times 100$$

$$= 100 - \left[\frac{14}{1919}\right] \times 100$$

$$= 100 - 0.73 = *99.27\%$$

5.9 Discussion of Error

As with any testing program, there is some degree of error which is incorporated into final results. The final test results obtained in the Phase II study, pounds carbon per hour, are dependent upon two variables [see Section 5.61, equation (a)]. These variables are the effluent gas flow rate (expressed as standard cubic feet per minute, scfm, at 60°F and 29.92 in. Hg) and the organic concentration of the gas stream (expressed in laboratory analysis reports as a volume to volume percentage as carbon dioxide (V/V% as CO_2, or more commonly as parts per million parts, ppm). A discussion of the effect of errors in these two factors on the final error in the test results is in order.

5.91 Effluent Gas Flow Rate

The velocity of a gas stream is generally determined by using a standard pitot tube with an inclined manometer. The pitot tube equation can be expressed as:

$$\text{(f)} \quad V = K_p \sqrt{\frac{T\,\Delta P}{P\,(M.W.)}}$$

where,

V = velocity of the gas stream (ft/sec)
T = absolute temperature ($^oR = 460 + {}^oF$)
P = absolute pressure (in. Hg) of the gas in the approach system
M.W. = molecular weight of the duct gas
ΔP = velocity pressure (in. H_2O), or velocity head
K_p = constant (84.63 for the standard type pitot tube), derived empirically from the basic velocity flow relationship, $V = C_p\sqrt{2gh}$, where, in addition to terms defined above, C_p = pitot tube coefficient (empirically determined as 0.99 for a standard pitot tube).

*Only one sample was utilized for this calculation. Generally an efficiency has been calculated per each individual sample. For cylinder No. 8, the efficiency becomes 98.80 percent.

Taking this pitot tube equation as presented and performing a differential analysis, assuming Kp and M.W. are constant, we have:

(g) $V = V\ (T,\ P,\ \Delta P)$

(h) $$\frac{(\Delta V)^2}{V^2} = \left(\frac{\partial V}{\partial T}\right)^2 \cdot \frac{(\Delta T)^2}{V^2} + \left(\frac{\partial V}{\partial P}\right)^2 \cdot \frac{(\Delta P)^2}{V^2} + \left(\frac{\partial V}{\partial(\Delta P)}\right)^2 \cdot \frac{[\Delta(\Delta P)]^2}{V^2}$$

$$\left(\frac{\Delta V}{V}\right)^2 = \left(\frac{\partial \ln V}{\partial \ln T}\right)^2 \left(\frac{\Delta T}{T}\right)^2 + \left(\frac{\partial \ln V}{\partial \ln P}\right)^2 \left(\frac{\Delta P}{P}\right)^2 + \left(\frac{\partial \ln V}{\partial \ln(\Delta P)}\right)^2 \left[\frac{\Delta(\Delta P)}{\Delta P}\right]^2$$

$$= \left(\frac{1}{2}\right)^2 \left(\frac{\Delta T}{T}\right)^2 + \left(-\frac{1}{2}\right)^2 \left(\frac{\Delta P}{P}\right)^2 + \left(\frac{1}{2}\right)^2 \left[\frac{\Delta(\Delta P)}{\Delta P}\right]^2$$

(i) $$\frac{\Delta V}{V} = \pm \left\{\frac{1}{4}\left[\left(\frac{\Delta T}{T}\right)^2 + \left(\frac{\Delta P}{P}\right)^2 + \left(\frac{\Delta(\Delta P)}{\Delta P}\right)^2\right]\right\}^{1/2}$$

Knowing the error in the temperature, ΔT, the error in the pressure, ΔP, the error in the velocity pressure (velocity head), $\Delta(\Delta P)$, the error in velocity, ΔV, can be determined.

The gas flow rate (scfm) can be expressed as:

(j) $$\text{scfm} = (Kp)\ (A)\ \left(\frac{P}{T}\right)\left(\frac{T\Delta P}{P\ (M.W.)}\right)^{1/2}$$

$$= (K_p)\ (A)\ \left(\frac{P\,\Delta P}{T\ (M.W.)}\right)^{1/2}$$

where, in addition to the terms defined for the velocity equation (f), this section,

A = cross-sectional area of a stack volume that is being sampled.

Assuming an error in all the terms of the above gas flow rate equation, then:

(k) $$\left(\frac{\Delta(\text{scfm})}{\text{scfm}}\right)^2 = \left(\frac{\partial \ln \text{scfm}}{\partial(\ln K_p)}\right)^2 \left(\frac{\Delta K_p}{K_p}\right)^2 + \left(\frac{\partial \ln \text{scfm}}{\partial(\ln A)}\right)^2 \left(\frac{\Delta A}{A}\right)^2$$

$$+ \left(\frac{\partial \ln \text{scfm}}{\partial(\ln p)}\right)^2 \left(\frac{\Delta P}{P}\right)^2 + \left(\frac{\partial \ln \text{scfm}}{\partial \ln(\Delta P)}\right)^2 \left(\frac{\Delta(\Delta P)}{\Delta P}\right)^2$$

$$+ \left(\frac{\partial \ln \text{scfm}}{\partial \ln T}\right)^2 \left(\frac{\Delta T}{T}\right)^2 + \left(\frac{\partial \ln \text{scfm}}{\partial \ln(M.W.)}\right)^2 \left(\frac{\Delta M.W.}{M.W.}\right)^2$$

$$= \left(\frac{\Delta Kp}{Kp}\right)^2 + \left(\frac{\Delta A}{A}\right)^2 + \left(\frac{1}{2}\right)^2 \cdot \left(\frac{\Delta P}{P}\right)^2 + \left(\frac{1}{2}\right)^2 \cdot \left[\frac{\Delta(\Delta P)}{\Delta P}\right]^2$$

$$+\left(-\frac{1}{2}\right)^2 \left(\frac{\Delta T}{T}\right)^2 + \left(-\frac{1}{2}\right)^2 \left(\frac{\Delta M.W.}{M.W.}\right)^2$$

$$(1) \quad \frac{\Delta scfm}{scfm} = \pm\left\{\left(\frac{\Delta Kp}{Kp}\right)^2 + \left(\frac{\Delta A}{A}\right)^2 + \frac{1}{4}\left(\frac{\Delta P}{P}\right)^2 + \frac{1}{4}\left[\frac{\Delta(\Delta P)}{\Delta P}\right]^2 + \frac{1}{4}\left(\frac{\Delta T}{T}\right)^2 + \frac{1}{4}\left(\frac{\Delta M.W.}{M.W.}\right)^2\right\}^{1/2}$$

A. Calculations

It has been previously determined by numerous source sampling tests by both industrial and federal government personnel that there exists a standard deviation, expressed as a percentage error, attributable to each term specified in the gas flow rate equation (j), as shown in the following Table 16.

TABLE 16
Standard Deviation, As Percentage Error,
Flow Rate Equation Terms

Term	Designation	*Error (%)
Constant	K_p	$\pm$ 1
Temperature (abs.)	T	$\pm$ 1
Velocity pressure	ΔP	$\pm$ 20
Pressure (abs.)	P	$\pm$ 1
Molecular weight	M.W.	$\pm$ 1
Cross-sectional area	A	$\pm$ 1

Utilizing the various percentage errors listed in Table 16 in equation (1), the standard deviation, expressed as a percent, for the gas flow rate (scfm) becomes:

$$\% \text{ Error (scfm)} = \pm\left[(1) + (1) + (\tfrac{1}{4}) + (\tfrac{1}{4})\ (20)^2 + (\tfrac{1}{4}) + (\tfrac{1}{4})\right]^{1/2}$$

$$= \pm\ 10\%$$

Therefore, 10 percent is the standard deviation expressed as a percentage error in calculated gas flow rates utilizing the above Table 16 parameters even though "excellent" measurements and determinations are made for the factors of the gas flow rate equation (j). The most significant contributory error to this percentage expression of standard deviation for scfm error is the measurement error of ΔP or velocity head.

*For a further reference on this percentage error estimation, refer to ASHRAE Handbook of Fundamentals, American Society of Heating, Refrigeration and Air Conditioning Engineers, Inc., New York, 1967.

5.92 Organic Concentration

The following equation (m) is generally utilized in the laboratory determinations of sample organic concentration.

(m) organic concentration (V/V% as CO_2) =

$$(100)\left[\frac{(\text{megacounts})}{(\overline{K})\ (\text{volume})}\right]$$

$$= (100)\left[\frac{(\text{megacounts/volume})}{\overline{K}}\right]$$

where,

V/V% = volume to volume percentage as CO_2

megacounts = integrated signal output from the hydorgen flame detector used in analysis

volume = volume of sample

$\overline{K}$ = calibration factor = megacounts/volume CO_2

This equation (m) has the form $\overline{U} = \frac{\overline{X}}{\overline{Y}}$, where $\overline{U}$ is an indirectly measured quantity which is a function of $\overline{X}$ and $\overline{Y}$, directly measured independent variables or quantities. In equation (m) $\overline{U}$ = organic concentration, $\overline{X}$ = megacounts/volume, and $\overline{Y} = \overline{K}$.

We can determine the precision index or standard deviation, expressed as a percentage error, of the indirectly determined quantity, $\overline{U}$, in terms of $\overline{X}$ and $\overline{Y}$, and their error indexes, by utilizing the following equation (n) (91).

(n) $$\left(\frac{\sigma\overline{U}}{\overline{U}}\right)^2 = \left(\frac{\sigma\overline{X}}{\overline{X}}\right)^2 + \left(\frac{\sigma\overline{Y}}{\overline{Y}}\right)^2 \quad \text{or,}$$

$$\left(\frac{p\overline{U}}{\overline{U}}\right)^2 = \left(\frac{p\overline{X}}{\overline{X}}\right)^2 + \left(\frac{p\overline{Y}}{\overline{Y}}\right)^2$$

where,

$\sigma\overline{U}$, $\sigma\overline{X}$, $\sigma\overline{Y}$ = independent standard deviations of single observations for $\overline{U}$, $\overline{X}$ and $\overline{Y}$.

$p\overline{U}$, $p\overline{X}$, $p\overline{Y}$ = independent probable errors of single measurements for $\overline{U}$, $\overline{X}$, $\overline{Y}$.

This same equation (n) can be used if $\overline{U} = (\overline{X})(\overline{Y})$ (91). As shown in equations (h), (i) and (l) this section, the numerators of the various fraction terms in equation (n) can be any expression of error or precision index as long as the same precision index is utilized in all terms of the equation.

In equation (m), this section, the final organic concentration is affected by both random errors of sampling and analysis and constant errors or biases. An average value of the calibration factor, $\overline{K}$,

is used in equation (m) determinations. This $\overline{K}$ value contains an error of calibration for the set of analysis calculations it is used for. The volume used for total sample volume in equation (m) contains a relatively constant error of about 4 percent caused by the inclusion of the initial air enclosed by the GATF's trap-probe in the final expression of total sample volume. The megacounts per volume variation in a sampling and analysis set reflects random errors. Utilizing equation (n), all of these errors can be combined to yield a final statement of organic concentration in the following way:

(o) organic concentration = (cc CO_2/cc sample) + (4%) (cc CO_2/cc sample) $\pm$ (total standard deviation),

where, cc CO_2/cc sample = V/V% or ppm organic concentration expressed as CO_2,

4% = constant error caused by the trap-probe air dilution of total sample volume,

$\pm$ (total standard deviation) = the error in sampling and the analytical manipulations, including the measurement of sample volume, plus the error of the calibration factor, $\overline{K}$.

The ($\pm$ total standard deviation) in equation (o) can be determined by rearranging equation (n) and expressing it as:

$$\text{(p)} \quad \sigma\overline{U} = \sigma\left(\frac{X}{Y}\right) = \frac{\overline{X}}{\overline{Y}} \left[\left(\frac{\sigma\overline{X}}{\overline{X}}\right)^2 + \left(\frac{\sigma\overline{Y}}{\overline{Y}}\right)^2\right]^{1/2}$$

where,

$\sigma\overline{U} = \sigma\left(\frac{\overline{X}}{\overline{Y}}\right)$ = total standard deviation of the organic concentration,

$\overline{X}$ = (megacounts/volume) in equation (m) = (organic concentration) (k),

$\overline{Y}$ = $\overline{K}$ in equation (m).

It should be noted that k is the average calibration constant used in the analytical calculations, whereas $\overline{K}$ is an independent variable with precision index $\sigma\overline{K}$.

With equation (n) rearranged as equation (p), and substituting some actual numbers given in the stack simulator II report (PML-71-17, Appendix F, Errata II, pp. 509-510; also described in Section 4.6) the following total random error of sampling and analysis can be determined:

$$\sigma\overline{U} = \sigma\left(\frac{\overline{X}}{\overline{Y}}\right) = \left[\frac{(\text{volume } CO_2/\text{volume sample})\ (k)}{\overline{K}}\right] \cdot$$

$$\left[\left(\frac{\sigma(\text{megacounts/volume})}{(\text{megacounts/volume})}\right)^2 + \left(\frac{\sigma\overline{K}}{\overline{K}}\right)^2\right]^{1/2}$$

$$= \frac{\left[0.005209_7 \left(\frac{\text{volume } CO_2}{\text{volume sample}}\right)\right] \cdot \left[45.57\left(\frac{\text{megacounts}}{\text{volume } CO_2}\right)\right]}{45.57 \text{ megacounts/volume } CO_2} \cdot$$

$$\left[\left[\frac{(0.000010_0)\ (k)}{(0.0052097)\ (k)}\right]^2 + \left(\frac{0.27}{45.57}\right)^2\right]^{1/2}$$

$$= 0.5210 \pm 0.0032 \text{ V/V\% as } CO_2$$

Please note again that $\overline{X}$ = (megacounts/volume) = k (organic concentration), and therefore $\sigma\overline{X}$ = k [σ (organic concentration)].

Organic emission in pounds carbon per hour is given by equation (a), this section, which states that E_{obs} (in pounds carbon per hour) = (1.9×10^{-6}) (ppm) (scfm). This equation has the form $\overline{U} = (\overline{X})\ (\overline{Y})$, where $\overline{U}$ = the organic emission in pounds carbon per hour, $\overline{X}$ = ppm, and $\overline{Y}$ = scfm. Equation (n), this section, can be used to determine the total precision index or standard deviation (or standard deviation expressed as a percentage error) of the indirectly determined quantity E_{obs} (or $\overline{U}$) in equation (a), if the ppm error as determined by the utilization of equations (n), (o) and (p), this section, and the scfm error as determined by equation (1), this section, have been calculated. This final error evaluation of organic emission in lb carbon per hour can be expressed as follows:

(q) organic emission (lb carbon per hour) = (lb carbon/hr) + (4% lb carbon/hour) $\pm$ (total standard deviation)

where,

4% lb carbon/hour = constant error caused by the trap-probe air dilution of the total sample volume,

$\pm$ (total standard deviation) = the error in sampling and analytical manipulations, including the measurement of sample volume, plus the error of the calibration factor, $\overline{K}$.

This method of error calculation was utilized in determining a final statement of the error contained in the lb carbon per hour organic emission values reported in this Phase II study for metal decorating and web offset samples, and is next described in this 5.9 Section.

5.93 Organic Emission Error Calculations

A. Web Offset Samples

Table 16a is a tabulation of duplicate samples collected from web offset plant emissions. A working plot, Graph 1, was made of sample concentrations (x axis values) versus deviation from the average of each duplicate sample set (y axis values). For example, duplicate values determined for a plant's emission, 1077 ppm and 1050 ppm (both expressed as CO_2) would be plotted versus the deviation of the duplicate values (14 ppm) from their average (1064 ppm). Any suspected duplicate sample values (e.g., because of probe contamination, etc.) were not included in Graph 1 or any organics emissions error calculations.

When all the points were graphed, the resulting plot appeared as a scatter diagram which depicted no obvious dependence of the deviations from average to sample concentration values. A null hypothesis was proposed that there was indeed no significant dependence of the graphed X and Y values, and was tested by computer fitting the data to a linear curve utilizing the least squares formulas for fitting a straight line to a series of points (92).

The best straight line, as shown in Graph 1, for the plotted points had a y-intercept of 27.69 ppm (standard deviation = $\pm$ 7.06), and a slope of 2.32×10^{-2} (standard deviation = $\pm 6.48 \times 10^{-3}$), or

$$(r) \quad Y = (27.69 \pm 7.06) + (2.32 \times 10^{-2} \pm 6.48 \times 10^{-3}) \; X$$

where

Y = deviation from the average of duplicate samples,
X = individual sample concentrations (ppm) of duplicate samples.

A t-test (92) was used to determine whether the slope and y-intercept of the line in Graph 1 differed significantly more from zero than could be accounted for by the analytical and sampling errors.

$$t_{(slope)} = \frac{|0.0 - (2.32 \times 10^{-2})|}{6.48 \times 10^{-3}} = 3.58$$

$$t_{(y\text{-intercept})} = \frac{|0.0 - 27.69|}{7.06} = 3.92$$

The values of t calculated utilizing the slope value (2.32×10^{-2}) and the y-intercept value (27.69 ppm), and the value of the standard deviation of the slope ($\pm 6.48 \times 10^{-3}$) and the standard

TABLE 16a

Duplicates, Web Offset Samples

Organics Total (x) (ppm)	Organics Deviation from Average (y) (ppm)	Organics Total (x) (ppm)	Organics Deviation from Average (y) (ppm)
1077.0	14.0	57.0	47.0
1050.0	14.0	151.0	47.0
1346.0	131.0	14.0	5.0
1688.0	131.0	23.0	5.0
1589.0	79.0	18.0	15.0
1747.0	79.0	48.0	15.0
353.0	75.0	297.0	55.0
203.0	75.0	187.0	55.0
783.0	79.0	98.0	46.0
624.0	79.0	6.0	46.0
327.0	41.0	284.0	6.0
409.0	41.0	297.0	6.0
524.0	93.0	226.0	6.0
710.0	93.0	215.0	6.0
686.0	47.0	4.0	3.0
780.0	47.0	9.0	3.0
354.0	32.0	15.0	2.0
418.0	32.0	18.0	2.0
86.0	20.0	246.0	4.0
47.0	20.0	255.0	4.0
433.0	109.0	2085.0	68.0
650.0	109.0	2221.0	68.0
180.0	2.0	117.0	48.0
183.0	2.0	21.0	48.0
759.0	5.0	29.0	3.0
748.0	5.0	36.0	3.0
19.0	13.0	95.0	10.0
45.0	13.0	116.0	10.0
2410.0	216.0	2608.0	17.0
1904.0	216.0	2641.0	17.0
2241.0	17.0	2332.0	100.0
2275.0	17.0	2532.0	100.0
1919.0	0.0	455.0	97.0
1920.0	0.0	261.0	97.0

y-intercept = 27.69 (standard deviation = $\pm$ 7.06)

slope = 2.32×10^{-2} (standard deviation = $\pm$ 6.477×10^{-3})

Graph I — Organic Emission, Web Offset Sample

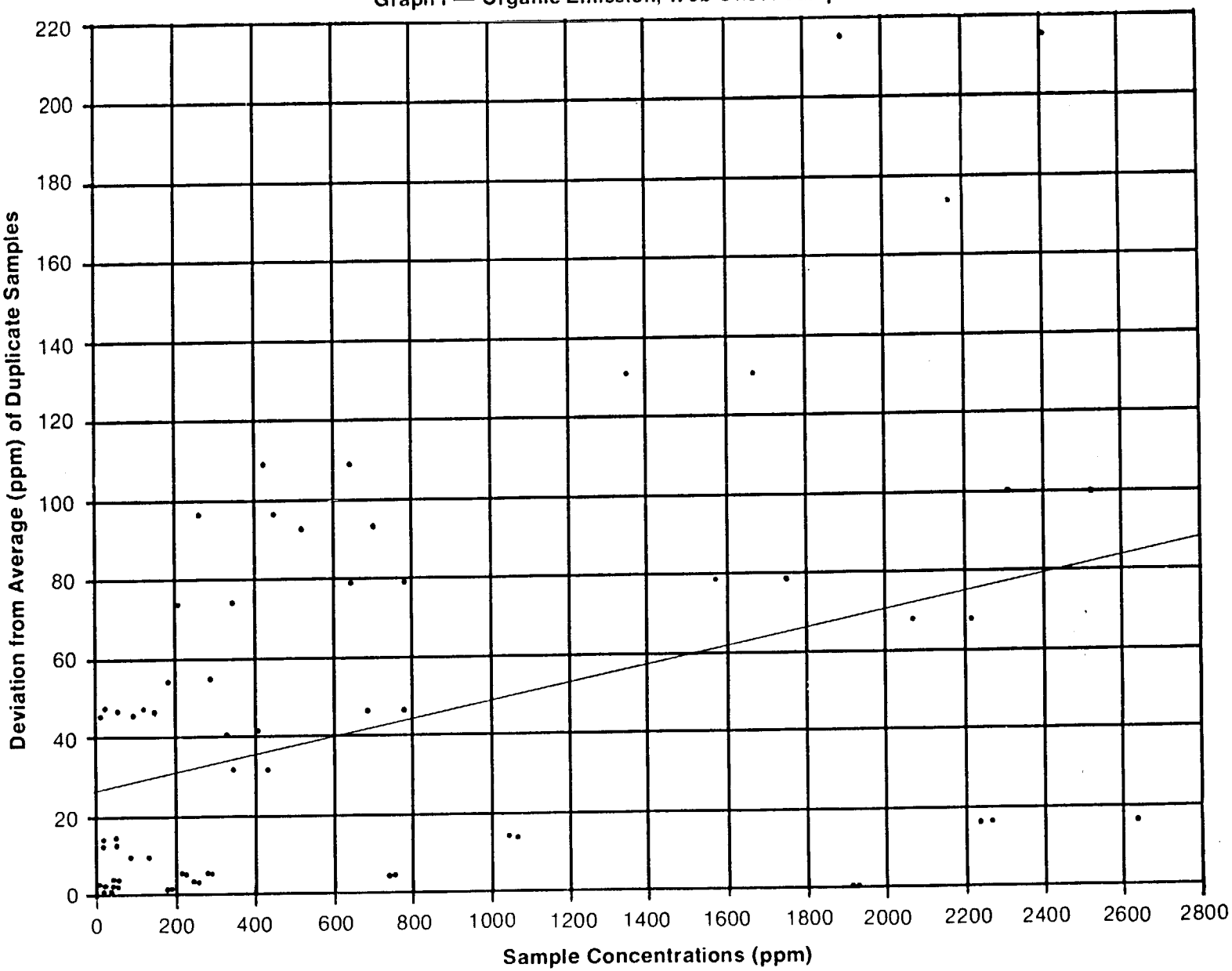

deviation of the y-intercept ($\pm$ 7.06 ppm) was compared to the tabular t values, entering the table with 66 (number of points - 2) degrees of freedom (93). Since the calculated t values exceeded the tabular t value at the 99 percent confidence level, it was concluded that the slope and y-intercept of the line in Graph 1 both differed significantly from zero, which indicated that the error, or deviation from the average values, of duplicate samples is dependent upon the individual sample's organics concentration, thus disproving the hypothesis that no dependency existed.

The deviation from the average value of duplicate samples, one of which, supposedly, has an organics concentration of 2000 ppm (as CO_2) would be given by:

$$\begin{aligned}\text{Deviation from average} &= 27.7 + (2.32 \times 10^{-2})\,(2.0 \times 10^{3}) \\ &= 27.7 + 46.4 \\ &= 74.1 \text{ ppm}\end{aligned}$$

This can then be converted to the standard deviation for the individual organic sample values of the duplicate sample values set:

$$\text{Standard Deviation (individual sample value)} = \left[\frac{(74.1)^2 + (74.1)^2}{2-1}\right]^{1/2} = \pm\, 104.79 \text{ ppm}$$

Expressed as a percentage error for the 2000 ppm sample value, the standard deviation can be represented by:

$$\text{Standard Deviation (as percentage error)} = \left(\frac{\pm\, 104.79}{2000}\right)(100) = \pm\, 5.24\ \%$$

Assuming that calibration factor, $\overline{K}$, used in the determination of the organic sample value (ppm as CO_2) using equation (m) has a maximum standard deviation, expressed as a percentage, of 1.0 percent, the following total random error of sampling and analysis for the 2000 ppm sample value can be determined by employing equation (p):

$$\begin{aligned}\text{Total random error, ppm, (or total standard deviation, individual sample values)} &= (2000 \text{ ppm})[(0.0524)^2 + (0.01)^2]^{1/2} \\ &= \pm\, 106.80 \text{ ppm}\end{aligned}$$

$$\text{Total random error, \%, (or total standard deviation, as a percentage)} = \left(\frac{\pm\, 106.80}{2000}\right)(100) = \pm\, 5.34\ \%$$

The final organic value (ppm, as CO_2), including the 4 percent

error caused by the trap-probe air dilution of the total sample volume, expressed as in equation (o) is:

$$2000 \text{ ppm} + (4\%)\ (2000 \text{ ppm}) \pm 106.80 \text{ ppm},$$
$$= 2000 \text{ ppm} + (80 \text{ ppm}) \pm 106.80 \text{ ppm}$$

The combined ppm error could be expressed as:

$$(100)\left(\frac{80 + 106.80}{2000}\right) = 9.34\%, \text{ at this 2000 ppm level.}$$

The effective error range, combining all ppm deviation possibilities due to both constant and random errors involved, could be expressed as:

$$\left[\frac{100\,(80 - 106.80)}{2000}\ ,\ \frac{100\ (80 + 106.80)}{2000}\right] \cdot (2000 \text{ ppm})$$
$$= \left[(-\ 1.34\% \text{ to} + 9.34\%)\ (2000 \text{ ppm})\right]$$
$$= -\ 26.80 \text{ to} + 186.80 \text{ ppm.}$$

It should be emphasized that the 4 percent constant error of probe-trap air dilution of the total sample volume could be easily eliminated by subtracting the dilution volume from the total calculated sample volume in the initial analytical calculations.

The organic emission value of this 2000 ppm sample, in pounds carbon per hour, assuming a gas flow rate of 5000 scfm, is (see equation (a) this section):

$$\text{lb carbon per hour} = (1.9 \times 10^{-6})\ (\text{ppm})\ (\text{scfm})$$
$$= (1.9 \times 10^{-6})\ (2000)\ (5000)$$
$$= 19 \text{ lb carbon/hr}$$

The total precision index or standard deviation (or standard deviation expressed as a percentage error) of the lb carbon per hour can be determined by using the scfm error determined previously in Section 5.91, A (i.e., $\pm$ 10%, using equation (l), this section), and the total random ppm error determined for the 2000 ppm organics sample value [utilizing equations (n), (o), and (p), this section] in equation (n) with $\overline{U}$ = lb C/hr, $\overline{X}$ = ppm, and $\overline{Y}$ = scfm:

$$\left[\frac{\sigma(\text{lb C/hr})}{(\text{lb C/hr})}\right]^2 = \left(\frac{\sigma(\text{ppm})}{\text{ppm}}\right)^2 + \left(\frac{\sigma\text{scfm}}{\text{scfm}}\right)^2$$

$$\sigma(\text{lb C/hr}) = (\text{lb C/hr})\left[\left(\frac{\sigma\,\text{ppm}}{\text{ppm}}\right)^2 + \left(\frac{\sigma\text{scfm}}{\text{scfm}}\right)^2\right]^{1/2}$$

$$= (19)\ [(.0534)^2 + (.10)^2]^{1/2}$$

$$= \pm\ 2.15 \text{ lb C/hr}$$

Total standard deviation, as a percentage $= \left(\frac{2.15}{19}\right)(100) = \pm 11.32\%$

The final error evaluation of the organic emission in lb carbon/hour can be expressed as in equation (q), this section:

19 lbC/hr + (4%) (19 lbC/hr) $\pm$ 2.15 lbC/hr = 19 lbC/hr + (0.76 lb C/hr) $\pm$ 2.15 lb C/hr.

The combined (lbC/hr) error could be expressed as:

$$(100)\left[\frac{0.76 + 2.15}{19}\right] = 15.32\%$$

The effective error range combining all (lb C/hr) deviation possibilities due to both constant and random errors involved could be expressed as:

$$\left[\frac{(100)(0.76-2.15)}{19}, \frac{(100)(0.76+2.15)}{19}\right](19 \text{ lbC/hr})$$

$$= [-7.32\% \text{ to} + 15.32\%](19 \text{ lb C/hr})$$

$$= -1.39 \text{ to} + 2.91 \text{ (lb C/hr)}$$

Again, it should be noted that the 4 percent constant error of the probe-trap air dilution of total sample volume could be easily eliminated by subtracting the dilution volume from the total sample volume in the initial analytical calculations.

B. Metal Decorating Samples

Table 16b is a tabulation of duplicate samples collected from metal decorating plant emissions. The same method of data analysis performed in Section 5.93, A, was employed in this section B, and it was determined that the graphed points should be linearily fitted utilizing the least squares formulas for fitting a straight line to a series of points. The best straight line, as shown in Graph 2, for the plotted points had a y-intercept of 68.27 ppm (standard deviation = $\pm$ 21.82 ppm), and a slope of 1.46×10^{-2} (standard deviation = $\pm 3.21 \times 10^{-3}$), or

$$\text{(s)} \quad Y = (68.27 \pm 21.82) + (1.46 \times 10^{-2} \pm 3.21 \times 10^{-3})\ X$$

where Y = deviation from the average of duplicate samples,
X = individual sample concentrations (ppm) of duplicate samples.

Again, a t-test was used, as in Section 5.93, A, to determine whether the slope and y-intercept of the line in Graph 2 differed significantly more from zero than could be accounted for by the analytical and sampling errors.

TABLE 16b
Duplicates, Metal Decorating Samples

Organics Total (x) (ppm)	Deviation from Average (y) (ppm)	Organics Total (x) (ppm)	Deviation from Average (y) (ppm)
9124.0	474.0	440.0	104.0
8177.0	474.0	232.0	104.0
162.0	16.0	5780.0	12.0
130.0	16.0	5756.0	12.0
4917.0	16.0	884.0	7.0
4949.0	16.0	898.0	7.0
2750.0	471.0	13574.0	126.0
1808.0	471.0	13323.0	126.0
4206.0	41.0	77.0	35.0
4288.0	41.0	7.0	35.0
6997.0	451.0	5.0	1.0
6195.0	451.0	7.0	1.0
55.0	21.0	12282.0	633.0
96.0	21.0	13547.0	633.0
6052.0	367.0	126.0	34.0
6785.0	367.0	58.0	34.0
64.0	2.0	15574.0	556.0
67.0	2.0	14462.0	556.0
2140.0	29.0	112.0	18.0
2082.0	29.0	147.0	18.0
133.0	23.0	151.0	27.0
87.0	23.0	205.0	27.0
2185.0	172.0	175.0	47.0
1442.0	172.0	81.0	47.0
1769.0	123.0	149.0	3.0
1524.0	123.0	156.0	3.0
20045.0	82.0	230.0	30.0
21684.0	82.0	171.0	30.0
5573.0	63.0	30.0	7.0
5447.0	63.0	44.0	7.0
20363.0	52.0	3474.0	290.0
21405.0	52.0	2894.0	290.0
8295.0	421.0	46.0	13.0
9137.0	421.0	20.0	13.0
5.0	2.0	25.0	5.0
1.0	2.0	35.0	5.0
3076.0	108.0	188.0	43.0
2860.0	108.0	102.0	43.0
57.0	21.0		
15.0	21.0		

y-intercept = 68.27 (standard deviation = $\pm$ 21.82)
slope = 1.46×10^{-2} (standard deviation = $\pm 3.21 \times 10^{-3}$)

Graph 2 — Organic Emission, Metal Decorating Sample

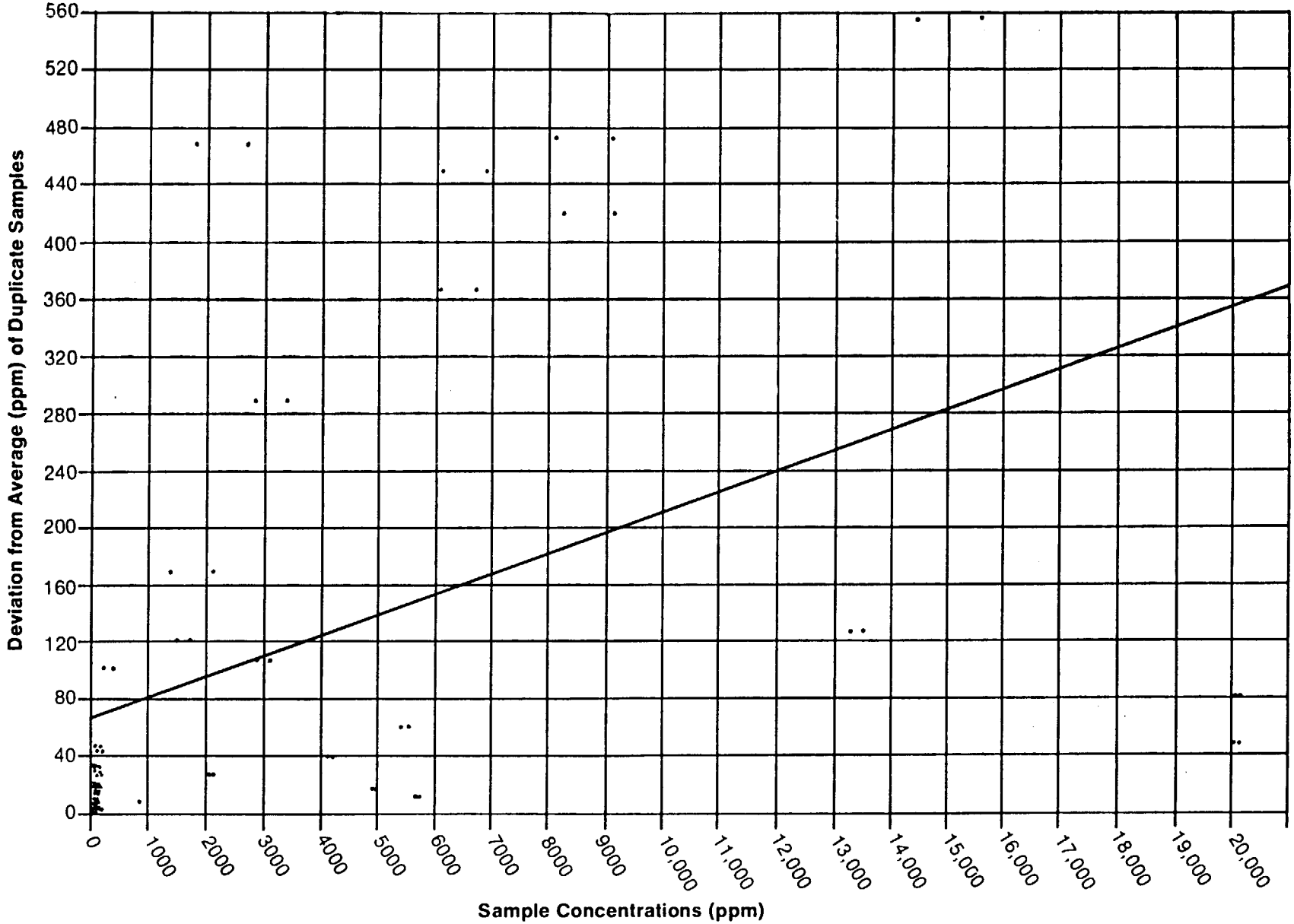

$$t_{(slope)} = \frac{|0.0 - (1.46 \times 10^{-2})|}{3.21 \times 10^{-3}} = 4.55$$

$$t_{(y\text{-intercept})} = \frac{|0.0 - 68.27|}{21.82} = 3.13$$

The values of t calculated utilizing the slope value (1.46×10^{-2}) and the y-intercept value (68.27 ppm), and the value of the standard deviation of the slope ($\pm 3.21 \times 10^{-3}$) and the standard deviation of the y-intercept ($\pm$ 21.82 ppm) was compared to the tabular t values, entering the table with 76 (number of points - 2) degrees of freedom. Since the calculated t values exceeded the tabular t value at the 99 percent confidence level, it was concluded that the slope and y-intercept of the line in Graph 2 both differed significantly from zero which demonstrated again, as in Section 5.93A, that the error, or deviation from the average values, of duplicate samples is dependent upon the individual sample's organics concentration.

The deviation from the average value of duplicate samples, one of which, supposedly, has an organic concentration of 10,000 ppm (as CO_2) would be given by:

$$\begin{aligned} \text{Deviation from average} &= 68.27 + (1.46 \times 10^{-2})(100 \times 10^{2}) \\ &= 68.27 + 146.00 \\ &= 214.27 \text{ ppm} \end{aligned}$$

This can then be converted to the standard deviation for the individual organic sample values of the duplicate sample value set:

Standard deviation (individual sample volume) =

$$\left[\frac{(214.27)^2 + (214.27)^2}{2 - 1}\right]^{1/2}$$

$$= \pm 303.02 \text{ ppm}$$

Expressed as a percentage error for this 10,000 ppm sample value, the standard deviation can be represented by:

Standard deviation (as percentage error) =

$$\left(\frac{\pm 303.02}{10,000}\right)(100) = \pm 3.03\%$$

Assuming that the calibration factor, $\overline{K}$, used in the determination of the organic sample value (ppm as CO_2) using equation (m) has a maximum standard deviation, expressed as a percentage, of 1.0%, the following total random error of sampling and analysis for the 10,000 ppm sample value can be determined by employing equation (p):

total random error, ppm, (or total standard deviation, individual sample values) =

$$(10,000 \text{ ppm})\,[(0.0303)^2 + (0.01)^2]^{1/2} = \pm\, 319.08 \text{ ppm}$$

total random error, %, (or total standard deviation, as a percentage) =

$$\left(\frac{\pm\, 319.08}{10,000}\right)(100) = \pm\, 3.19\,\%$$

The final organic value (ppm, as CO_2) including the 4 percent error caused by the trap-probe air dilution of the total sample volume, expressed as in equation (o) is:

$$10,000 \text{ ppm} + (4\%)\,(10,000 \text{ ppm}) \pm 319.08 \text{ ppm},$$
$$= 10,000 \text{ ppm} + 400 \text{ ppm} \pm 319.08 \text{ ppm}$$

The combined ppm error could be expressed as:

$$(100)\left(\frac{400 + 319.08}{10,000}\right) = 7.19\%, \text{ at this } 10,000 \text{ ppm level.}$$

The effective error range, combining all ppm deviation possibilities due to both constant and random errors involved could be expressed as:

$$\left[\frac{100\,(400 - 319.08)}{10,000},\ \frac{100\,(400 + 319.08)}{10,000}\right] \cdot (10,000 \text{ ppm})$$

$$= [(+0.81\% \text{ to } + 7.19\%)\,(10,000 \text{ ppm})]$$
$$= +\,81 \text{ to } +\,719 \text{ ppm}$$

It should again be emphasized that the 4 percent constant error of probe-trap air dilution of the total sample volume could be easily eliminated by subtracting the dilution volume from the total calculated sample volume in the initial analytical calculations.

The organic emission value of this 10,000 ppm sample, in pounds carbon per hour, assuming a gas flow rate of 3000 scfm is (see equation (a), this section):

$$\text{lb carbon per hour} = (1.9 \times 10^{-6})\,(\text{ppm})\,(\text{scfm})$$
$$= (1.9 \times 10^{-6})\,(10,000)\,(3000)$$
$$= 57 \text{ lb carbon/hr}$$

The total precision index or standard deviation (or standard deviation expressed as a percentage error) of the lb carbon per hour can be determined by using the scfm error determined previously in Section 5.91,A, (i.e. $\pm$ 10 percent, using equation (l), this section), and the total random ppm error determined for the 10,000 ppm organics sample value (utilizing equations (n), (o), and (p), this section) in equation (n) with $\overline{U}$ = lb C/hr, $\overline{X}$ = ppm, and Y = scfm:

$$\left[\frac{\sigma(\text{lb C/hr})}{(\text{lb C/hr})}\right]^2 = \left(\frac{\sigma\,\text{ppm}}{\text{ppm}}\right)^2 + \left(\frac{\sigma\,\text{scfm}}{\text{scfm}}\right)^2$$

$$\sigma(\text{lb C/hr}) = (\text{lb C/hr})\left[\left(\frac{\sigma\,\text{ppm}}{\text{ppm}}\right)^2 + \left(\frac{\sigma\,\text{scfm}}{\text{scfm}}\right)^2\right]^{1/2}$$

$$= (57)\,[(0.0319)^2 + (0.10)^2]^{1/2}$$

$$= \pm\ 5.98\ \text{lb C/hr}$$

Total standard deviation as a percentage $= \left(\frac{5.98}{57}\right)(100) = \pm\ 10.49\%$

The final error evaluation of the organic emission, in lb carbon/hour, can be expressed in equation (q), this section:

$$57\ \text{lb C/hr} + (4\%)(57\ \text{lb C/hr}) \pm 5.98\ \text{lb C/hr}$$
$$= 57\ \text{lb C/hr} + 2.28\ \text{lb C/hr} \pm 5.98\ \text{lb C/hr}$$

The combined (lb C/hr) error could be expressed as:

$$(100)\left(\frac{2.28 + 5.98}{57}\right) = 14.49\%$$

The effective error range combining all (lb C/hr) deviation possibilities due to both constant and random errors involved could be expressed as:

$$\left[\frac{(100)(2.28 - 5.98)}{57}\ ,\ \frac{(100)(2.28 + 5.98)}{57}\right] 57\ \text{lb C/hr}$$
$$= [-6.49\%\ \text{to} + 14.49\%]\ (57\ \text{lb C/hr})$$
$$= -3.70\ \text{to}\ 8.26\ (\text{lb C/hr})$$

Subtraction of the probe-trap dilution volume from the total sample volume in the initial analytical calculations would eliminate, as stated previously, the 4 percent constant error.

5.94 Summary of Error, Organics Emission Calculations

A. Web Offset Samples

1. The error, or deviation from average values, for duplicate samples is dependent upon the individual sample's organics concentration level (see pp. 96-99).

2. For an average web offset printing operation from which duplicate organics concentration samples have been taken from a fairly uniform exhaust gas flow sampling point (exhaust gas flow rate = 5000 scfm) and analyzed to yield an organics concentration of 2000 ppm (expressed as CO_2) for one of the duplicate samples:

   a. The total ppm random error of sampling and analysis for the 2000 ppm sample value, expressed as total standard deviation, as a percentage, is ± 5.34 percent (see pp. 99-100).

   b. The organics emission value of this 2000 ppm sample, in pounds carbon per hour, is 19 lb carbon/hr; the total precision index or standard deviation, expressed as a percentage error, of this lb carbon per hour value is ± 11.32 percent (see pp. 100-101).

B. Metal Decorating Samples

1. The error, or deviation from average values, for duplicate samples is dependent upon the individual sample's organics concentration level (see pp. 101-104).

2. For an average metal decorating operation from which duplicate organics concentration samples have been taken from a fairly uniform exhaust gas flow sampling point (exhaust gas flow rate = 3000 scfm) and analyzed to yield an organics concentration of 10,000 ppm (expressed as CO_2) for one of the duplicate samples:

   a. The total ppm random error of sampling and analysis for the 10,000 ppm sample value, expressed as total standard deviation, as a percentage, is ± 3.19 percent (see pp. 104-105).

   b. The organics emission value of this 10,000 ppm sample, in pounds carbon per hour, is 57 lb carbon/hr; the total precision index or standard deviation, expressed as a percentage error, of this lb carbon per hour value is ± 10.49 percent (see pp. 105-106).

6.0 WEB OFFSET FIELD STUDIES

6.1 Introduction

The third task of the Phase II program effort was directed at assessing emissions from both controlled and uncontrolled web offset presses. The effects of press speed, ink coverage, method of drying, and type of control equipment (if any) on the quantity of emitted hydrocarbon were determined. The contributions of paper and of dryer exhaust to total organic content of the stream were also evaluated.

6.2 Uncontrolled Sources

6.21 Web Offset Press Using Direct Flame Hot Air Drying

The results from this test are contained in Plant Code No. 3-WO, (Appendix D). For ease of reference, the data used in calculating material inputs and outputs is collected in Table 17. For a more comprehensive review of test results, see Tables 31 and 32, Section 6.4.

Since the format of Table 17 will be used several times in this section, a brief explanation of column headings is in order. Column one gives the number of the sample cylinder employed in the field. Since samples were obtained in duplicate (unless otherwise stated) they are shown in groupings of two in the table.

Column two gives a brief description of the process, that is, the number of colors being printed, the type of paper stock and the number of webs utilized.

Columns three and four list press speed and ink coverage — the two parameters required in the calculation of material inputs.

Columns five and six give the total organic concentration (in ppm) and the gas flow rate (in standard cubic feet per minute). Multiplication of these two factors by the constant 1.90×10^{-6} (see Equation (a), Section 5.61) gives the organic emission rate in pounds of carbon per hour. These values are listed in column seven in the table.

An attempt was made to correlate total organic emissions with the rate of ink consumption for a web offset press employing direct flame hot air drying. The ink consumption rate was determined by multiplying the press speed (expressed as impressions per hour) by the calculated coverage (expressed as pounds of ink per impression) as below in equation (a).

(a) ink consumption = press speed x coverage

$$\left(\frac{\text{lb}}{\text{hr}}\right) = \left(\frac{\text{impressions}}{\text{hr}}\right) \times \left(\frac{\text{pounds}}{\text{impression}}\right)$$

TABLE 17

Uncontrolled Source: Direct Flame Hot Air Drying System (3-WO)

Sample No.	Operation Sampled	Press Speed (iph)	Ink Coverage (lb/imp)	Total Organics (ppm)	Gas Flow Rate (scfm)	Organics Emission (lb carbon/hr)
1	2-color, 2-web, uncoated	18000	.0017	1646	2320	7.26*
3	2-color, 2-web, uncoated	12000	.0017	1077	2320	4.75*
4				1050	2320	4.64*
5	4-color, 1-web, coated	24000	.0024	1346	3900	9.97*
6				1638	3900	12.50*
9	No printing, paper only	18000	--	353	3900	2.62*
10				203	3900	1.50*
11	No printing, no paper, dryer at 420°F	--	--	194	3900	1.43
12				invalid	3900	--
13	No printing, paper only	12000	--	783	2320	3.46*
14				624	2320	2.75*
15	No printing, no paper, dryer at 375°F	--	--	327	2320	1.45
16				409	2320	1.75
17	2-color, 1-web, coated	15000	.0027	524	5600	5.57*
18				710	5600	7.55*
19	2-color, 1-web, coated	15000	.0027	605	5600	6.44*
20				invalid	5600	--
21	4-color, 1-web, coated	18000	.0027	1111	3900	8.20*
22				invalid	3900	--
23	4-color, 1-web, coated	18,000	.0027	916	3900	6.79*
24				811	3900	6.00*

*Plotted data point on Figure 22

In equation (a) an impression is defined as a completely inked sheet or folded booklet, depending on product, coverage is that calculated value relating the total quantity of ink used for the total impressions run. Therefore, the calculated coverage value is inclusive of all printing units utilized whether the job is two-color or four-color perfecting or non-perfecting. For a given job, ink consumption varied according to press speed, resulting in a considerable range of values. All were plotted against total organic emissions.

Figure 22 is a plot of ink consumption versus emission rate (expressed as lb carbon/hr) for printing on both coated and uncoated stock. The values which have been plotted are those with an asterisk in Table 17. Background values obtained for the dryer only operation are not included in the graph.

A least squares linear equation was determined for the data points plotted in Figure 22 and asterisked in Table 17 with the following result:

$$\text{Y-intercept} = 2.445 \pm 0.655$$
$$\text{slope} = 0.124 \pm 0.018$$

Figure 22 suggests that an approximate linear relationship exists between ink consumption and emission rate; it further indicates that the type of paper used, that is, coated or uncoated, has little or no effect on the total organic emission.

The values shown for zero ink consumption (Samples Nos. 9, 10, 13, 14) are those obtained where paper only (no printing) was passed through the dryer. These residual organic values represent the sum of contributions from paper, dryer exhaust and desorbed organics.

A separate test on the dryer exhaust alone showed that at least 50 percent of the residual organics were derived from the dryer exhaust and from removal of organics from the walls of the stack (see Samples Nos. 11, 15, 16).

In Section 5.63 equation (d) of this report, the factor "C" was defined as the ratio of the observed to the calculated emission, i.e.,

$$C = \frac{E_{obs}}{E_{calc}}$$

Therefore,

$$E_{obs} = E_{calc} \cdot C$$

Substituting $E_{calc} = S_f (I \times P) + R$

$$\text{(b)} \qquad E_{obs} = [S_f (I \times P) + R] \; C$$

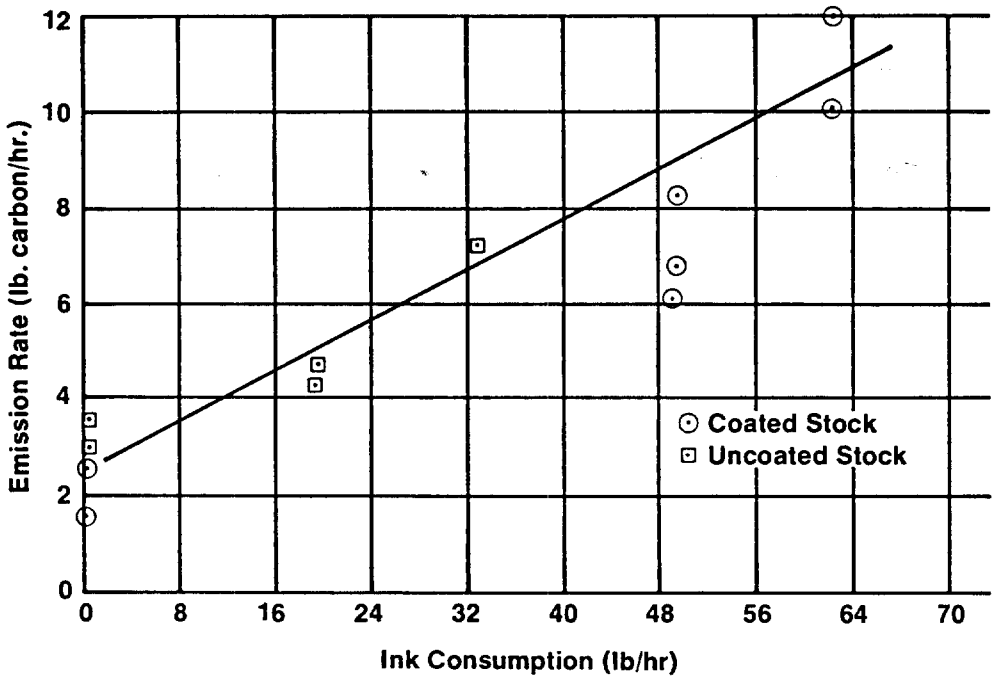

Figure 22 — Variation of Emission Rate With Ink Consumption for a Web Offset Press Using Direct Flame Hot Air Drying

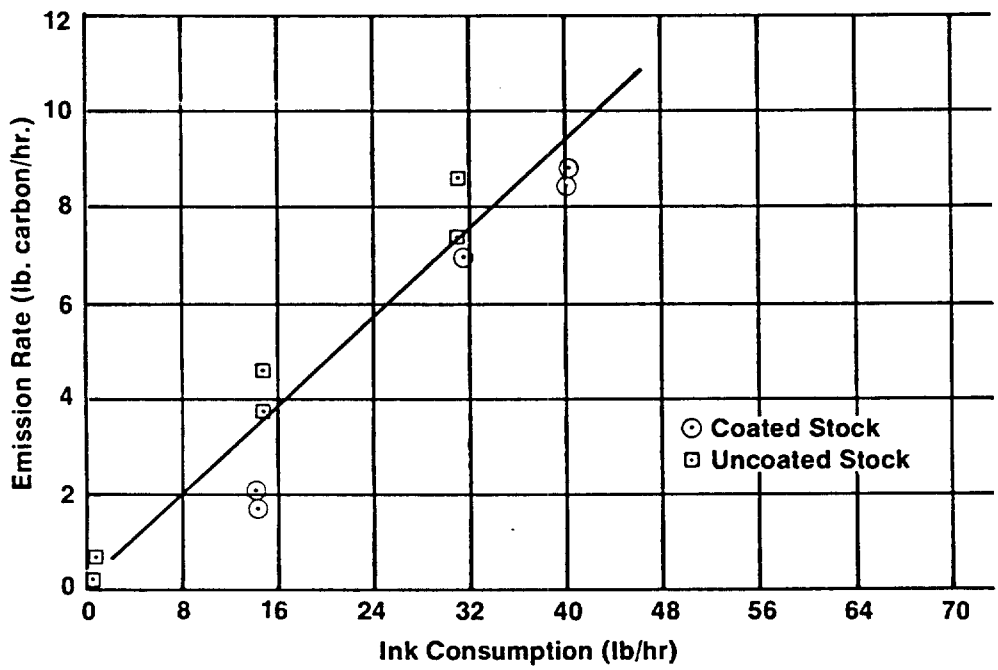

Figure 23 — Variation of Emission Rate With Ink Consumption for a Web Offset Press Using High Velocity Hot Air Drying

The terms of equation (b) have been defined previously (see Section 5.62, 5.63). However, it should be noted that this particular form of the equation renders explicit the relationship between the observed emission and the ink consumption. That is, a plot of E_{obs} versus (I x P) should give a straight line with a slope (S x C) and an intercept (C x R).

A comparison between observed and calculated emission rates is presented in Table 18. Calculated values were determined using equation (b) as previously developed in the data treatment (Section 5.62).

$$E_{calc} = S_f (I \times P) + R$$

where the value 0.4 was assumed for S_f on the basis of known ink formulations, and R is the residual from paper and dryer, the value of which was determined from Samples Nos. 13 and 14. The "C" factors in Table 18 are seen to fall within a rather narrow range, 0.36 to 0.45 with a calculated average being 0.40.

Samples Nos. 11, 15 and 16 were taken on the dryer only, that is no paper or ink were being fed through the system. The results suggest that after the press has been shut down, organics are being generated from the operation of the dryer. It seems likely that this organic material from the dryer only operation contributes to the organic values obtained for the paper only test (see Samples Nos. 13 and 14). The value used for R — the residual organics, is thus comprised of contributions from paper and from the operation of dryer. It can further be seen that the operation of a dryer with poorly controlled combustion can be the source of organic emission. Proper combustion practice in the operation of the dryer should be emphasized.

Table 18
"C" Factors for Direct Flame Hot Air Drying System (3-WO)

Press No.	Cylinder No.	Emission (calculated)	Emission (observed)	(C Factor)* E_{obs}/E_{calc}
1	5 & 6	25.06	11.24	.45
1	21, 23, 24	19.40	7.00	.36
2	1	16.0	7.26	.45
2	3 & 4	11.75	4.69	.39

*The average conversion factor for the direct flame hot air dryer is 1-C or 1-0.40 = 0.60. It should be emphasized that the "1-C" factor represents that portion of the calculated organic emission which may be: converted to CO_2 and water in the dryer, and/or retained in the ink film on the paper, and/or otherwise unaccounted for.

For calculation purposes, R was taken as the value obtained when paper only was passing through the dryer.

6.22 Web Offset Press Using High Velocity Hot Air Drying

The test conducted on a high velocity hot air drying system was similar in both its execution and intent to the test just described.

Duplicate samples were again collected under a variety of conditions and the results were used to correlate emission rate with various inputs. The results of this test are contained in Plant Code No. 4-WO (Appendix D). For ease of reference, the results are presented in Table 19 under the same column headings as described earlier in Section 6.21. For a more comprehensive review of test results, see Tables 31 and 33, Section 6.4. The calculated emission rate (expressed as lb carbon/hr) was plotted against ink consumption and is shown in Figure 23. Once again, the data are roughly linear.

A least squares linear equation was determined for the data points plotted in Figure 23 and asterisked in Table 19 with the following result:

$$\text{Y-intercept} = 0.344 \pm 0.664$$
$$\text{slope} = 0.201 \pm 0.025$$

The "C" factors calculated from E_{obs}/E_{calc} expression are presented in Table 20. The "C" factors as shown in Table 20 tend to fall within a range of 0.50 to 0.70 with a calculated average of approximately 0.60. The values are somewhat higher than those obtained from the direct flame dryer. Since (1-C) is assumed to be a measure of the conversion ability of the dryer in converting organics to CO_2 and water, it can be seen that the direct flame dryer serves, to some degree, as a better converter of organic solvents than the high velocity type. The assumption in this comparison of dryers is that the solvent retained by the ink film and paper and solvent losses through other means are independent of the dryer type. Previous studies reported in the Phase I final report (1) have shown that as much as 40 percent of the initial solvent may be retained in the product.

It will be noted in Figure 23 that the line through the data points intersects the ordinate at approximately zero, whereas the line in Figure 22 intersects at 2.3 lb/hr. This suggests that considerably fewer organics are derived from paper passing through a hot air dryer than from paper passing through a flame type dryer. Another possibility exists for this phenomenon and that is the effect of the web upon burner performance since the direct flame hot air dryer burners are located near the web to achieve direct flame drying.

Four samples were collected to determine whether or not dryer emission (no printing, no paper) decreased with time (Table 21). It was found that the total organic content of the stream remained relatively constant over a 60-minute period, thus further substantiating the fact that

TABLE 19
Uncontrolled Source: High Velocity Hot Air Drying System (4-WO)

Sample No.	Operation Sampled	Press Speed (iph)	Ink Coverage (lb/imp)	Total Organics (PPM)	Gas Flow Rate (scfm)	Organic Emission (lb carbon/hr)
1	4-color, 1-web, uncoated	15000	.0022	686	5800	7.55*
2				780	5800	8.58*
3	4-color, 1-web, uncoated	7000	.0022	354	5800	3.89*
4				418	5800	4.60*
5	Paper only, no printing (uncoated)	--	--	86	5800	0.95*
6				47	5800	0.52*
8	4-color, 1-web, coated	15000	.0022	433	5800	4.76*
9				650	5800	7.15*
10	4-color, 1-web, coated	7000	.0022	183	5800	2.01*
11				180	5800	1.98*
13	Dryer only, no printing	--	--	68	5800	0.75
14				51	5800	0.56
15	Dryer only, no printing	--	--	114	5800	1.25
16				88	5800	0.77
17	4-color, 1-web, coated	7000	.0057	759	6000	8.65*
18				748	6000	8.53*
20	4-color, 1-web, coated	12000	.0057	2295	6000	26.16
21				868	6000	9.89
25	4-color, 1-web, coated	15000	.0057	2410	6000	27.47
26				1904	6000	21.70
27	4-color, 1-web, coated	15000	.0057	2241	6000	25.54
28				2275	6000	25.93

*Plotted data point on Figure 23

TABLE 20

"C" Factors for High Velocity Hot Air Drying Systems (4-WO)

Cylinder No.	Ink Coverage (lb/imp)	Press Speed (iph)	Type Paper Stock	Emission (calculated)	Emission (observed)	C Factor* $E_{obs.}/E_{calc.}$
1 & 2	0.0022	15000	uncoated	13.95	8.07	0.58
3 & 4	0.0022	7000	uncoated	6.81	4.25	0.62
8 & 9	0.0022	15000	coated	13.95	5.96	0.43
10 & 11	0.0022	7000	coated	6.81	2.00	0.28
17 & 18	0.0057	7000	coated	16.71	8.59	0.51
20 & 21	0.0057	12000	coated	28.11	18.03	0.64
25 & 26	0.0057	15000	coated	34.95	24.59	0.70

*The average conversion factor for the high velocity hot air dryer is 1-C, or 1-0.60 = 0.40. It should be emphasized that the "1-C" factor represents that portion of the calculated organic emission which may be: converted to CO_2 and water in the dryer, and/or retained in the ink film on the paper, and/or otherwise unaccounted for.

organics are being generated from the operation of the dryer only. It is further believed that the gas supply to the burners of the dryer is responsible for nearly all the non-methane organics as measured. Organics formed by the combustion process itself would be a possible contributor.

It is of note here that these values are not significantly different from those obtained for paper only (see Samples Nos. 5 and 6). This suggests, in contrast to the conclusion drawn from the direct flame study, that paper, when put through a hot air dryer, is not a measurable contributor to total organics emission.

TABLE 21
Emission from Dryer Operation Only (4-WO)
(Effect of Time)

Sample No.	Time (min)	Total Organics (lb carbon/hr)
13	0-20	0.75
14	21-40	0.56
15	41-60	1.25
16	61-80	0.77

6.23 Field Observations

During the conduct of the field sampling of both the direct flame hot air and high velocity hot air drying systems, field testing personnel were able to make field observations in several areas. At the initial start-up of the process and until a steady-state condition was reached visible emissions appeared to be at their greatest. Generally, this start-up period did not exceed 30 minutes, but the density of the visible emission may have been of such magnitude as to constitute a violation of the visible emission standards of the locality in which the plant test occurred. Furthermore, on the processes as evaluated in this segment of the program, the smoke emission potential appeared greater for the high velocity dryer than for the direct flame. The fact is recognized that this observation was limited to the physical number of locations sampled and will certainly vary according to each individual plant. The type of paper, condition of the drying equipment and prevailing atmospheric conditions all will affect this observation. Nonetheless, this observation was made for the particular drying systems as evaluated in the program.

The area of odor evaluation continued to be a difficult one for the field testing crew to assess. Again, within defined limitations and capabilities of the test crew, the direct flame hot air type dryer appeared to emit a more odorous type emission when compared to the high velocity type dryer. Due to the length of stay and

prolonged saturation of the testing crew in the near vicinity of the stack emissions, distinguishing of levels of odors became virtually impossible.

If it is found desirable to rate the intensity of the odor and compare this with known or predetermined levels, an odor panel should then be formed.

Much of the observations made by the testing crew have been incorporated into Section 6.5 of this report, primarily those where testing data is available to substantiate the recommendation or conclusion. The object of this particular section of the report has been to relate certain observations for which scientific data are limited or non-existent and to impart to the reader some additional insight which does not appear in the more formal sections of this report.

6.3 Controlled Sources

6.31 Introduction

In order to determine the effectiveness of air pollution control units in converting organic emissions to carbon dioxide and water, the following dryer-incinerator combinations were evaluated.

1. Thermal incinerator with high velocity hot air dryer [refer to Plant Code No. 5-WO (Appendix D)].

2. Thermal incinerator with direct flame hot air dryer [refer to Plant Code No. 6-WO (Appendix D)].

3. Catalytic incinerator (1-bed) with direct flame hot air dryer [refer to Plant Code No. 7-WO (Appendix D)].

4. Catalytic incinerator (2-bed) with direct flame hot air dryer [refer to Plant Code No. 7-WO (Appendix D)].

The practice of obtaining inlet (prior to the incinerator) and outlet (after the incinerator) samples was followed for all tests so as to permit the calculation of incinerator efficiency. The equation utilized for this calculation can be found in Section 5.7. Incinerator efficiency values were determined over a range of operating temperatures. Measurements were also conducted on the concentration of carbon dioxide (CO_2), and carbon monoxide, and where applicable the nitrogen oxides (NO_x) — three products commonly associated with the combustion process.

6.32 Thermal Incineration with High Velocity Hot Air Dryer

The results from this test are contained in Plant Code No. 5-WO, Appendix D. For ease of reference, the data used in calculating material inputs and outputs for this test are summarized in Table 22. For a more comprehensive review of test results, see Table 34, Section 6.4.

TABLE 22

Controlled Source: Thermal Incineration With High Velocity Hot Air Dryer (5-WO)
(4-color, 1-web perfecting press)

Sample No.	Sampling Location	Press Speed (iph)	Incinerator Temperature (°F)	Total Organics (ppm)	Gas Flow Rate (scfm)	Organic Emission (lb carbon/hr)
1	Inlet to control equipment	14000	--	1919	6350	22.80
2		"	--	1920		22.80
3	Outlet of control equipment	"	1000	102	"	1.20
*4		"	1000	invalid	"	--
5	Outlet of control equipment	"	1200	57	"	0.68
6		"	1200	151	"	1.81
7	Outlet of control equipment	"	1300	14	"	0.17
8		"	1300	23	"	0.28
9	Outlet of control equipment	"	1350	18	"	0.22
10		"	1350	28	"	0.48
**11	Inlet to control equipment	"	--	invalid	"	--
**12		"	--	invalid	"	--

*Sample result invalidated; possible contact with trichloroethylene slurry
**Sample invalidated due to press operational difficulty

Samples Nos. 1 through 12 consecutively were taken on a web offset press with a high velocity hot air type dryer and controlled by a thermal incinerator. Duplicate Samples Nos. 1, 2, 11 and 12 were taken at the outset and the conclusion to the test series, respectively. These samples were taken with the intention of establishing the emission level prior to entry into the air pollution control unit. Unknown to the testing crew, a press stoppage occurred during the sampling period and was so recorded on Data Sheet #3-ECD in the field after the discovery was made. After review of the analytical results, Samples Nos. 11 and 12 were thus invalidated based on this occurrence. In order to establish the efficiency of the control equipment, samples were collected at the outlet. However, due to the inaccessibility of the control equipment, outlet samples were collected sequentially and on an individual basis. Physical size (height) of the control unit and selected sampling location would not permit simultaneous collection of samples in duplicate as was the case on the inlet.

Samples Nos. 3 through 10 consecutively were taken at the outlet of the control equipment over a range of operational temperatures. The incineration temperature of the thermal control unit was obtained by means of a read-out from a temperature controller having a thermocouple inserted into the center of the chamber of the control unit. Two sequential and individual samples were taken at each of four temperature settings, 1000°F, 1200°F, 1300°F, and 1350°F with an apparent increase in organic conversion efficiency being noted with a corresponding increase in incineration temperature. Concurrent with each sampling, nitrogen oxides (more commonly referred to as NO_x) readings were taken using a Universal Testing Kit, Model No. 2, No. 83498, manufactured by Mine Safety Appliance. These readings along with the respective organic reading in ppm are shown in Table 23.

Figure 24 represents a plot of organics and NO_x readings (taken at incinerator outlet) versus incineration temperature of the control unit. Also included in Figure 24 is a plot of CO_2 values versus the corresponding incineration temperature for the high velocity hot air (h.v.h.a.) drying system.

An increase in incineration temperature is accompanied by an apparent decrease in organic values while indicating an increase in both the NO_x and CO_2 values. The oxides of nitrogen are due to the reaction of nitrogen and oxygen at elevated temperatures of incineration. Carbon dioxide increase, of course, reflects the increased oxidation of organics.

The data recorded on the NO_x values (although measured in low levels, 20-25 ppm) tend to substantiate the fact that thermally controlled processes

TABLE 23
Comparison of Organic and NO_x Values
with Incineration Temperatures (5-WO)

Incineration Temperature Outlet (°F)	Total Organics Outlet (ppm)	NO_x Outlet (ppm)	Efficiency* (%)
1000	102	10	94.61
1200	57 & 151	14	97.01 & 92.14
1300	23 & 14	20	98.80 & 99.86
1350	18 & 48	30	99.10 & 97.49

*For purposes of calculation of efficiency of the thermal incineration unit studied, each individual sample was utilized and the corresponding efficiency is so noted in the table. Equation utilized in efficiency calculation can be found in Section 5.7 of this report.

Utilizing the data in Table 23, Figure 24 was constructed.

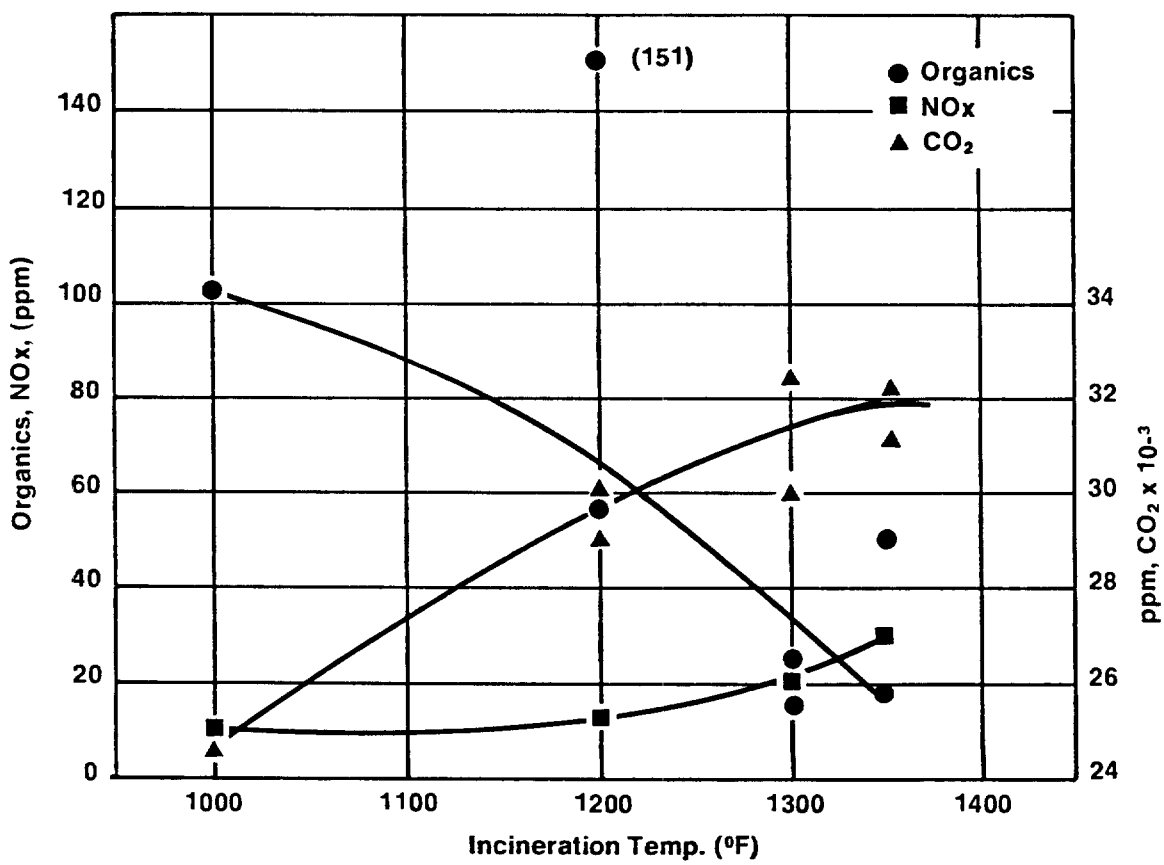

Figure 24 — **Web Offset Emissions: Organics, NOx, CO_2.**
(Thermal Incinerator — h.v.h.a. dryer)

(those units utilizing flame type afterburners) have a potential for creating NO_x emissions, which are generally accepted as an established contributor to photochemical smog.

An organic conversion efficiency of the 95 percent level was reached at operational incineration temperatures between 1100 to 1200°F. Increased incineration temperature above 1200°F is being accompanied by an increase in the level of NO_x emission as well as the carbon monoxide levels and should be avoided. It should be emphasized that increasing amounts of CO (carbon monoxide) indicates incomplete combustion of organic material.

A comparison between the observed and calculated emission rates and the corresponding "C" factor of 0.73 compares favorably with the calculated average "C" value of 0.60 as presented in the uncontrolled discussion of this section of the report for the high velocity hot air type dryers (see Section 6.22).

6.33 Thermal Incineration With Direct Flame Hot Air Dryer

The results from this test are contained in Plant Code No. 6-WC, (Appendix D). For ease of reference, the data used in calculating material inputs and outputs for this test are summarized in Table 24. For a more comprehensive review of test results, see Table 35, Section 6.4.

Samples Nos. 13 to 22 consecutively, were taken on a web offset press with a direct flame hot air (multi-stage) type dryer utilizing thermal incineration type control equipment. Samples Nos. 15, 16, 20 and 21 were taken at the inlet to the control equipment in order to characterize the emissions from the process and to establish the inlet loadings for efficiency calculations. During the period in which Samples Nos. 20 and 21 were being taken, a press shutdown occurred which was unknown to the testing crew at that time and not discovered until completion of the tests. This fact was so recorded on Data Sheet #3-ECD. After review of the analytical results, Samples Nos. 20 and 21 were thus invalidated based on this occurrence. In order to establish the efficiency of the control equipment, samples were collected at the outlet. However, due to the inaccessibility of the control equipment outlet, samples were collected sequentially and on an individual basis. Physical size (height) of the control unit and selected sampling location would not permit simultaneous collection of samples in duplicate as was the case on the inlet.

TABLE 24

Controlled Source: Thermal Incineration With Direct Flame Hot Air Dryer (6-WO)
(4-color, 1-web perfecting press)

Sample No.	Sampling Location	Press Speed (iph)	Incinerator Temperature (°F)	Total Organics (ppm)	Gas Flow Rate (scfm)	Organic Emission (lb carbon/hr)
13	Outlet of control equipment	9000	1300	invalid*	5100	*
14		"	1300	0.00**	"	**
15	Inlet to control equipment	"	--	297	"	2.88
16		"	--	187	"	1.78
17	Outlet of control equipment	"	1200	2.0	"	0.019
18		"	1200	0.00**	"	**
19	Outlet of control equipment	"	1000	18	"	0.17
22		"	1000	29	"	0.28
20	Inlet to control equipment	"	--	invalid***	"	***
21		"	--	invalid***	"	***

*Result suspect; possible contamination from tricholorethylene slurry during sampling.

**Not detectable within experimental error.

***Result invalidated due to press operational difficulty.

TABLE 25
Comparison of Organic and NO_x Values
with Incineration Temperatures (6-WO)

Incineration Temperature Outlet (^oF)	Total Organics Outlet (ppm)	NO_x Outlet (ppm)	Efficiency* (%)
1000	18 & 29	1	92.50 & 87.90
1200	2 & 0.0	2	97.17 & 100.00
1300	0.0	4	100.00

*For purposes of calculation of efficiency of the thermal incineration unit studied, each individual sample was utilized and the corresponding efficiency is so noted in the table. Equation utilized in efficiency calculation can be found in Section 5.7 of this report.

Utilizing the data in Table 25, Figure 25 was constructed.

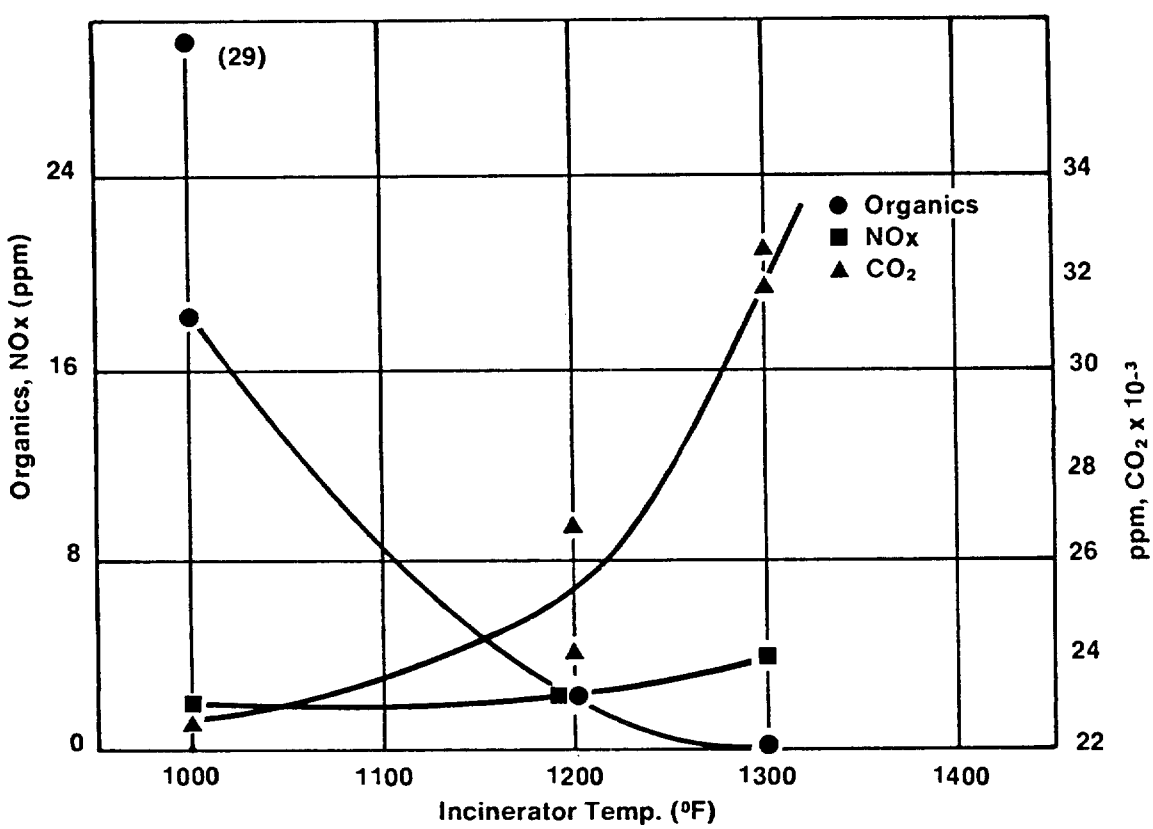

Figure 25 — Web Offset Emissions: Organics, NOx, CO_2
(Thermal Incinerator — d.f.h.a. Dryer)

Samples Nos. 13, 14, 17, 18, 19 and 22 were taken at the outlet of the control equipment over a range of operational temperatures. Incineration temperature was determined by direct reading from the thermocouple (of the temperature control device) inserted midway into the chamber of the control unit. Two sequential and individual samples were taken at each of the three temperature settings, 1000°F, 1200°F and 1300°F, with an apparent increase in organic conversion efficiency being noted with an increase in incineration temperature. Concurrent with each sampling, nitrogen oxide readings were taken using the instrument described in the previous test (Section 6.32). These readings along with the respective organic outlet readings in ppm are shown in Table 25.

Figure 25 represents a plot of organics and NO_x readings (taken at incinerator outlet) versus the incineration temperature of the control unit. Also included in Figure 25 is a plot of CO_2 values versus the corresponding incineration temperature for the direct flame hot air (d.f.h.a.) drying system. An increase in incineration temperature is accompanied by a pronounced decrease in organic values while indicating an increase in NO_x values.

Similar to Figure 24, Figure 25 indicates an increase of NO_x emissions with increased temperature. Furthermore, Figure 25 indicates an organic conversion efficiency of 95 percent being reached at operational incineration temperatures between 1100 and 1200°F. The formation of NO_x and CO is also at a minimum at this temperature (1100-1200°F).

A comparison between the observed and calculated emission rates, expressed as the "C" factor of 0.40 compares very favorably with the calculated average range of "C" value of 0.40 as presented in the uncontrolled discussion of this section of the report for direct flame hot air type dryers (see Section 6.21).

6.34 Catalytic Incineration (1-bed) With Direct Flame Hot Air Dryer

The results from this test are contained in Plant Code No. 7-WO (Appendix D). For ease of reference, the data used in calculating monitored inputs and outputs are summarized in Table 26. For a more comprehensive review of test results, see Table 36, Section 6.4.

Samples Nos. 1 through 12 consecutively were taken on a web offset press with a direct flame hot air dryer and controlled by a single-bed catalytic incinerator. Duplicate samples, Nos. 9, 10, 11, and 12 were taken with the intention of establishing the emission level

TABLE 26

Controlled Source: Catalytic Incinerator (1-bed) With Direct Flame Hot Air Dryer (7-WO)
(2-web, 1-color perfecting press)

Sample No.	Sampling Location	Press Speed (iph)	Incinerator Temperature (°F)	Total Organics (ppm)	Gas Flow Rate (scfm)	Organic Emission (lb carbon/hr)
9	Inlet to control equipment	15500	--	284	5000	2.69
10		"	--	297	"	2.81
11	Inlet to control equipment	15500	--	226	"	2.15
12		"	--	215	"	2.05
2	Outlet of control equipment	15500	950	849	"	4.62
4		"	950	4	"	0.038
1	Outlet of control equipment	15500	850	98	"	0.93
3		"	850	6	"	0.057
5	Outlet of control equipment	15500	750	544	"	2.96
7		"	750	6	"	0.057
6	Outlet of control equipment	15500	650	905	"	4.93
8		"	650	135	"	1.28

of the process prior to entry into the air pollution control unit. In order to establish the efficiency of the control equipment, duplicate samples Nos. 1 through 8 were collected at the outlet of the control equipment.

Samples Nos. 1 through 8 consecutively were taken at the outlet of the control equipment over a range of operational temperatures. The incineration temperature of the catalytic control unit was obtained by means of a read-out from a temperature controller having thermocouples inserted just prior to and immediately after the catalytic bed. In this case, the temperature of incineration was recorded as that measured just prior to the bed, although a comparison check of the temperature after the bed showed little or no variation between the two.

For some unknown reason duplicate samples were not in agreement and at three temperature settings, 650°F, 750°F and 950°F. At these incineration temperatures the organic values of one of the duplicates exceeded the established value for the process input. Upon further investigation it was found that the catalytic unit was built and designed to handle 3000 scfm of effluent, while recorded gas flow rates performed during the test series indicated the unit was handling flow rates on the order of 5000 scfm (approximately 1.5 times the design capability). While the velocity profile for the system provides no indication of irregular flow patterns or obstructions, it cannot be dismissed as pure conjecture that a build-up of organic material on the material on the catalyst bed could conceivably account for the unusually high organic values. Another possibility that must be considered is that the catalytic incinerator has not undergone major maintenance (i.e., removal and inspection of the catalyst bed for contamination) throughout its entire two years of operation. Analytical results of samples taken at the various temperature settings may tend to support this requirement for maintenance. The data appear to support the claims of air pollution regulatory officials that catalytic units — if not properly maintained — may fail to achieve the efficiency levels attained by thermal type afterburners. This tends to explain the apparent reluctance on the part of officials to approve installation permits for this type of equipment. There is also a greater tendency to place considerable reliability on the samples obtained of the process only, irrespective of the control equipment, since these organic values tend to be in agreement with a material balance of the system. The (1-C) value for this type of drying system (0.62) is in agreement with the average range of values reported from previous tests on direct flame hot air type dryers, namely 0.60.

Concurrent with each sampling, an attempt was made utilizing a Universal Testing Kit to obtain readings of nitrogen oxides. Results

proved negative indicating the apparent lack of nitrogen oxide generated from catalytic incineration. Previous tests of a thermal incinerator indicated the presence of NO_x, however, it should be emphasized that the temperatures at which this phenomenon occurred was considerably higher than that of catalytic incineration. The normal operating temperatures for thermal units range from 1000°F to 1400°F.

Utilizing the organic readings obtained with each corresponding incineration temperature, Table 27 was developed.

Figure 26 represents a plot of organics and corresponding CO_2 readings (at incineration outlet) versus incineration temperature of the control unit. Generally, with an increase in incineration temperature, an apparent decrease in organic values occurs while the CO_2 readings tend to increase to reflect the incineration of organic matter to CO_2 and water. This fact is not readily apparent in the figure and suggests further investigation.

TABLE 27
Comparison of Organic and CO_2 Values
with Incineration Temperatures (7-WO)

Incineration Temperature (°F)	Total Organics* Outlet (ppm)	CO_2 Outlet (ppm)	Efficiency** (%)
650	135 & 905	16159	53.45
750	6 & 544	16378	97.93
850	98 & 6	16669	62.21 & 97.93
950	4 & 849	17535	98.62

*For purposes of table, all data are shown, however, certain samples are suspect since results indicate the organic outlet loading greater than that of the inlet.

**For purposes of calculation of efficiency of the catalytic incineration unit as studied, each individual sample was utilized and the corresponding efficiency is noted in the table. Equation utilized in efficiency calculation can be found in Section 5.7 of this report.

Utilizing the data in Table 27, Figure 26 was constructed.

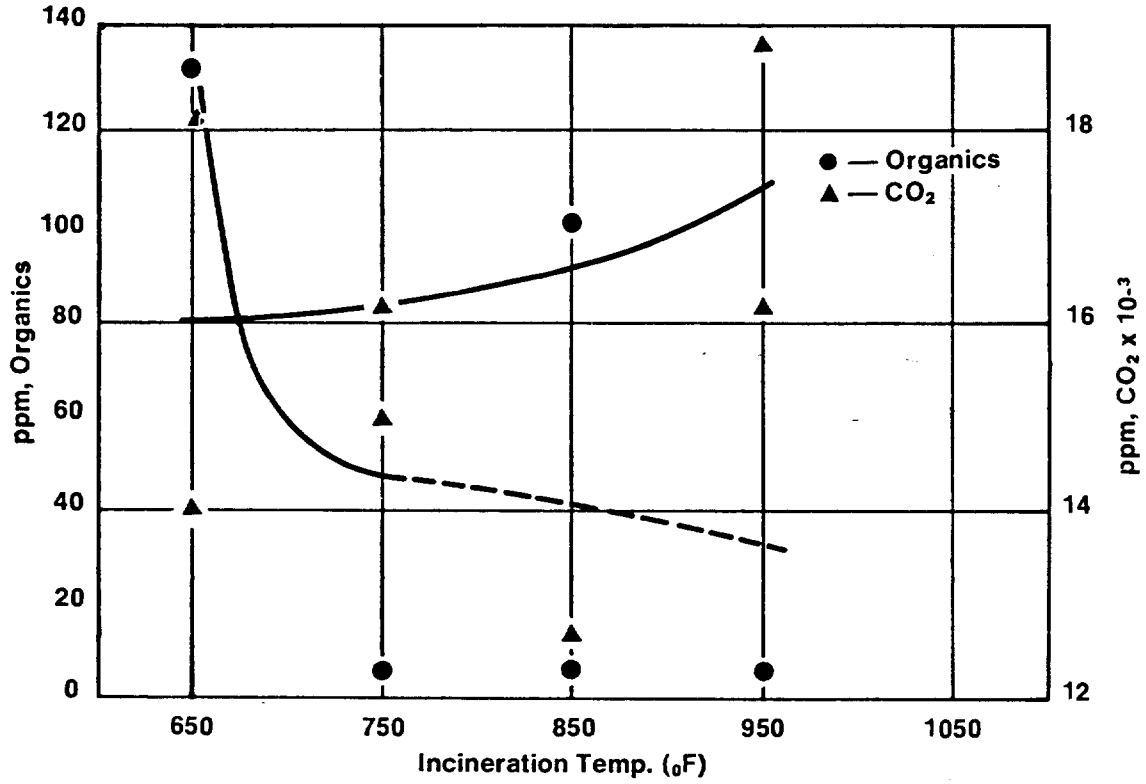

Figure 26 **— Web Offset Emissions: Organics, CO_2.**
(1-Bed Catalytic Incinerator — d.f.h.a. dryer)

6.35 Catalytic Incineration (2-bed) With Direct Flame Hot Air Dryer

The results from this test are contained in Plant Code No. 7-WO (Appendix D). For ease of reference, the data used in calculating material inputs and outputs for this test are summarized in Table 28. For a more comprehensive review of tests results, see Table 36, Section 6.4.

Samples Nos. 13 through 24 consecutively were taken on a web offset press with a direct flame hot air dryer and controlled by a double bed catalytic incinerator.

Two sets of duplicate samples, Nos. 21, 22, and 23, 24 were taken at the conclusion to the test series. These samples were taken with the intention of establishing the emission level of the process prior to entry into the air pollution control unit. In order to establish the efficiency of the control equipment, duplicate Samples Nos. 13 through 20 were collected at the outlet of the control equipment.

Samples Nos. 13 through 20 consecutively were taken at the outlet of the control equipment over a range of operational temperatures. The incineration temperature of the catalytic control unit was obtained by means of a read-out from a temperature controller having a thermocouple inserted just prior to and immediately after the catalytic bed. In this case, the temperature of incineration was

TABLE 28

Controlled Source: Catalytic Incinerator (2-bed) With Direct Flame Dryer (7-WO)
(1-web, 2-color perfecting press)

Sample No.	Sampling Location	Press Speed (iph)	Incinerator Temperature (°F)	Total Organics (ppm)	Gas Flow Rate (scfm)	Organic Emission (lb carbon/hr)
13	Outlet of control equipment	17500	900	4	9300	0.070
14		"	"	9	"	0.16
15	Outlet of control equipment	"	800	7	"	0.12
16		"	"	invalid	"	--
17	Outlet of control equipment	"	700	15	"	0.26
18		"	"	18	"	0.32
19	Outlet of control equipment	"	625	30	"	0.53
20		"	"	invalid	"	--
21	Inlet to control equipment	"	--	89	"	1.57
22		"	--	309	"	5.45
23	Inlet to control equipment	"	--	246	"	4.33
24		"	--	255	"	4.50

recorded as that temperature just prior to the bed. A check of temperatures indicated little or no variation between the before-and-after readings. Duplicate and simultaneous samples were taken at each of four temperature settings, 625°F, 700°F, 800°F and 900°F with an apparent increase in organic conversion efficiency being noted with a corresponding increase in incineration temperature. Again, as was the case in the previous test (see Section 6.34), duplicate samples were not in agreement at two temperature settings, 625°F and 800°F, and in all such cases the organic values of one of the duplicates exceeded the established value of the process input and were thus invalidated. In this case, however, the rated capacity of the catalytic unit (12,000 scfm) was larger than the recorded flow rate of effluent (9300 scfm) as measured during the test.

The velocity profile gave no indication of irregular flow patterns existing in the unit that might possibly account for the unusually high organic values. This catalytic unit along with the other unit previously described in Section 6.34 has not undergone major maintenance and thus, analytical results of the samples taken may tend to support this requirement for maintenance. Again, there is a greater tendency to place reliability on the samples obtained of the process only, irrespective of the control equipment since these organic values tend to be in agreement with a material balance of the system. Also, the degree of hydrocarbon conversion for this type of drying system (0.64) is in agreement with the average range of values reported from previous tests on direct flame hot air dryers, namely 0.60.

Concurrent with each sampling, an attempt was made utilizing a Universal Testing Kit to obtain readings of nitrogen oxides. Results proved negative indicating the apparent lack of nitrogen oxide generation from catalytic incineration.

Utilizing the organic readings obtained with each corresponding incineration temperature, Table 29 was developed.

Figure 27 represents a plot of organics and CO_2 values (from incinerator outlet) versus incineration temperature of the control unit. An increase in incineration temperature is accompanied by a decrease in organic values while indicating an increase in CO_2 values.

An organic conversion efficiency at a 95 percent level was determined at an operational incineration temperature between 700°F to 800°F.

TABLE 29

Comparison of Organic and CO_2 Values
With Incineration Temperatures

Incineration Temperature Outlet (°F)	Total Organics* Outlet (ppm)	CO_2 Outlet (ppm)	Efficiency** (%)
625	30 & 284	12006	88.00
700	15 & 18	13614	94.00 & 92.80
800	7 & 426	15017	97.20
900	4 & 9	17641	98.40 & 96.40

*For purposes of table, all data are shown, however, certain samples are suspect since results indicate the organic outlet loading greater than that of the inlet.

**For purposes of calculation of efficiency of the catalytic incineration unit as studied, each individual sample was utilized and the corresponding efficiency is noted in the table. Equation utilized in efficiency calculation can be found in Section 5.7 of this report.

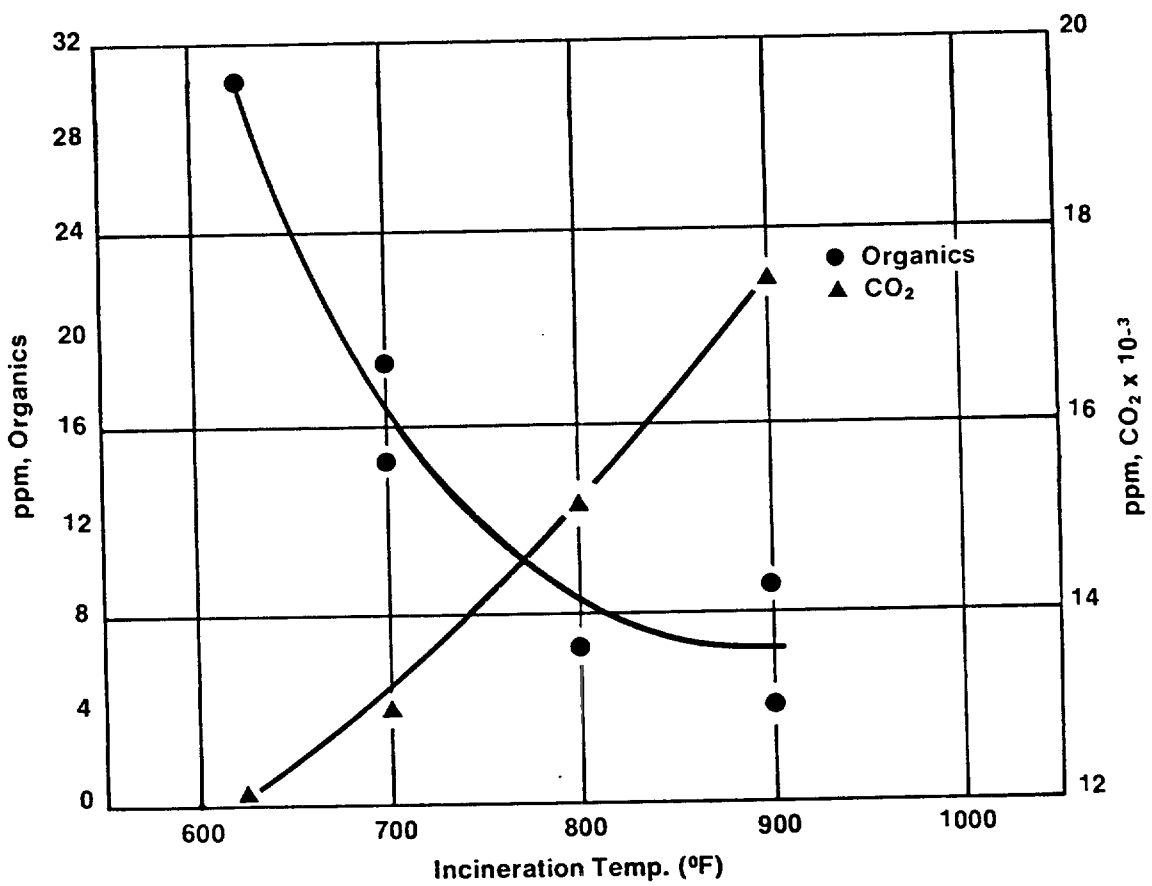

Figure 27 — **Web Offset Emissions: Organics, CO_2. (2-Bed Catalytic Incinerator — d.f.h.a. dryer)**

6.36 Field Observations

Throughout the conduct of field sampling of air pollution control units in control of the web offset process, field testing personnel were able to make certain field observations. In the control of smoke and odor both types of control equipment, thermal and catalytic, appeared to function equally well. At operational temperatures of 700°F to 800°F for catalysis and 1100°F to 1200°F for thermal type units, no visible emission could be detected. Odor, on the other hand, was not as easily discernible, although determinations were made at various incineration temperature settings. It appeared that at lower incineration temperatures than those stated above odor was prevalent to some degree. This would suggest that certain minimum incineration temperatures be achieved to keep the odor problem to a minimum.

As a result of field samplings and knowledge obtained on the formation of nitrogen oxides, carbon monoxide, and the overall reduction of organic material, local control agencies would do well to thoroughly evaluate all data before recommending or imposing high temperatures of incineration for various types of control equipment in order to eliminate odor. While the ability to achieve a high degree of organic conversion efficiency is certain feasible, the possible formation of additional contaminants should be noted. Proper operational and maintenance programs for afterburners should be stressed. Section 6.5 of this report attempts to recommend for consideration certain operational aspects in the usage of control equipment for both the graphic arts industry as well as pertinent regulatory bodies.

6.4 Summary of Web Offset Test Results

Summary tables for all web offset plants utilized in Task 3 field work, namely Plant Code Nos. 3-WO through 7-WO (excluding 1-WO and 2-WO which were primarily used to evaluate, improve and further develop GATF's method of sampling and analysis) are presented in this section. These summary tables include ranges of analytical results, organic conversion efficiencies of various types of air pollution equipment and operational characteristics of the various types of metal decorating graphic processes. In addition, a summary table indicating percentage low boilers from the various web offset plant tests is presented.

An error in an equation used by CMUPML in calculating results has decreased the reported calculated total sample volume and increased calculated organic contents for plant test data from 1-WO through 7-WO (see PML 72-24, Appendix F, for extent of change). In addition, an error introduced by a change in calibration factors (see PML 71-40 and PML 72-229, Appendix F) indicates that all trap sample results taken from field tests 1-WO through 7-WO may be high by an average value of 24.9 percent. No attempt was made to recalculate the data as presented due to the amount of data and the subsequent treatment of it.

(Summary Tables 30 through 41, inclusive, are shown on the following pages.)

TABLE 30
Web Offset Plant Descriptions

Plant Identification	Plant Description
3-WO	Offen (Job No. 643B), d.f.h.a. dryer; fuel gas not metered separately; more current dryer design.
4-WO	Offen (Job No. 6273), h.v.h.a. dryer; 5.78×10^6 Btu/hr; fuel gas is not separately metered; approximately 50% recirculation utilized for process printing.
5-WO	TEC Systems, Inc., h.v.h.a., 2-pass dryer (Model No. LA13, Serial #206); modern drying system utilizing latest engineering design.
	Emission controlled by Skinner Engineering Co., Model S-50 Smoke Abator; rated at 5000 scfm; 1-year, 6-months old; capital cost = $14000; installation cost = $6000; fuel cost = $1000 per month.
6-WO	Offen (No. 6454) d.f.h.a. dryer.
	Emission controlled by B. Offen thermal incinerator; rated at 12000 scfm; 1-year; 6-months old; capital cost = $15000; installation cost = $6000; fuel cost = $1200 per month.
7-WO 2-color, 1-web line	Offen-Air (No. 6456) d.f.h.a. dryer; fuel - natural gas, not separately metered; modern design.
	Emission controlled by Oxy-Catalyst catalytic incinerator (TL-120-H-720); 2-bed unit; rated at 12000 scfm; fuel consumption = 8000-9500 cu ft/hr, 9×10^6 Btu/hr; 1-year, 6-months old; capital cost = $29000; installation cost = $6000; fuel cost $1500-1800 per month.
1-color, 2-web line	Offen, multistage, d.f.h.a. dryer; fuel - natural gas, not separately metered; older type Offen dryer.
	Emission controlled by Oxy-Catalyst catalytic incinerator (TL-45-H-400); 1-bed unit; rated at 3000 scfm; fuel consumption = 2500-2700 cu ft/hr, 3×10^6 Btu/hr; 2-years old; capital cost = $17000; installation cost = $6000; fuel cost = $600 per month.
8-WO (BC)	WPE (Web Press Engineering) d.f.h.a. combination dryer; 1.2×10^6 Btu/hr; older design that is no longer manufactured.
	Emission controlled by a TEC Systems, Inc. "Turbo-Mix" thermal incinerator (prototype unit, Model No. R-314); rated at 2500 scfm at maximum designed operating temperature of 1500°F; fuel usage = 2800 cu ft/hr, 2×10^6 Btu/hr; 1-year old; capital cost = $12000; installation cost = $2500; fuel cost = $6870 per year based upon 2-shift, 5-1/2 day operation week.
9-WO (BC)	TEC Systems, Inc., h.v.h.a. dryer (Model LA-12); modern in design; is new installation; fuel consumption = 4400 cfh (rated), 2700 cfh (operational).
	Emission controlled by TEC-H-40 MC (Job No. 305) thermal/catalytic (dual function) incinerator; rated at 4000 scfm at maximum designed temperature (thermal - 1600°F, catalytic - 800°F); catalytic unit set-up has 1-bed; gas consumption = 1520 cfh for 800°F, 7.8×10^6 Btu/hr; 1-year old, capital cost = $23000; installation cost = $4000; fuel cost = $650 per month based upon 5-day, 2-shift operational week.

Graphic Process Variables

Plant Code	Type of Operation	Ink Usage (cyl. no.)	Ink Usage (lb/imp)	Press Speed (cyl. no.)	Press Speed (imp/hr)	Solvent Fractional Content (lb. weight)	Dryer Eq. [illegible] (scfm)	[illegible]	[illegible]	[illegible]	[illegible]	[illegible]
3-WO												
	Operation of dryer only	--	--	--	--	--	n.a.	n.a.	11, 12 13, 14	215 240	--	--
	Paper passing through dryer without printing. (coated, cyls. no. 9, 10, uncoated, cyls. no. 13, 14)	--	--	9, 10 13, 14	24000 18000	--	n.a.	n.a.	9, 10 13, 14	215 240	40# gloss blades (9, 10) 32# stock newsprint (13, 14)	--
	4-color, 1-web coated	5,6,7,8	0.0024	5,6	24000	0.40	n.a.	n.a.	5,6,7,8	215	40# gloss blades (5,6,7,8)	black, red
		21,22,23,24	0.0027	7,8,21 22,23,24	18000	--	n.a.	n.a.	21,22,23,24	240	50# stock,gloss (21,22,23,24)	blue, yellow
	2-color, 1-web coated	all	0.0027	all	15000	0.40	n.a.	n.a.	all	230	70# stock, brilliant	black,green
	2-color, 2-web uncoated	all	0.0017	1,2 3,4	18000 12000	0.40	n.a.	n.a.	all	240	32# stock newsprint	black, blue
4-WO												
	Operation of dryer only	--	--	--	--	--	2000-10000	550-560	all	300	--	--
	Paper (uncoated) passing through dryer without printing	--	--	all	15000	--	2000-10000	550-560	all	300	60#	--
	4-color, 1-web coated	all	0.0057	8,9,23,24 25,26,27,28	15000	0.40	2000-10000	550-560	8,9,10,11	300	40#	yellow, red black, blue
		all	0.0057	20,21 10,11,17,18	12000 7000	0.40	2000-10000	550-560	17,18,20,21 22,23,24,25 26,27,28	315	40#	
	4-color, 1-web uncoated	all	0.0022	1,2 3,4	15000 7000	0.40	2000-10000	550-560	all	300	60#	yellow,red black, blue
5-WO	4-color, 1-web coated, perfecting	all	0.0054	all	14000	0.40	n.a.	n.a.	all	240	50# consolidated	n.a.
6-WO	4-color, 1-web coated, perfecting	all	0.0015	all	9000	0.40	n.a.	n.a.	all	210	50# offset stock	n.a.
7-WO	2-color, 1-web uncoated, perfecting	all	0.0020	all	17500	0.40	n.a.	n.a.	all	172	60#	n.a.
	1-color, 2-web uncoated, perfecting	all	0.0013	all	15500	0.40	n.a.	n.a.	all	240	33#	n.a.
8-WO (BC)	5-color, 1-web coated, perfecting	all	0.00325	all	16000	0.40	2400	340	all	340	100#	n.a.
9-WO (BC)	5-color, 1-web coated, perfecting	all	0.0025	all	27000	0.40	**5200	600	all	390	50#	n.a.

*Rated or calculated
**5200 cfm at web temperature of 600°F

TABLE 32
Summary of Analytical Results

[Plant Code No. 3-WO]

Type of Operation	Cylinder No.	Flow Rate (scfm)	Organics Total (ppm)	Organics Low Boilers* (%)	CO (ppm)	CO_2 (ppm)	CH_4 (ppm)	$E_{observed}/E_{calculated}$ (data)	$E_{observed}/E_{calculated}$ (ratio)	Efficiency of Trap (%)
Operation of dryer only	11	3900	194	--	n.d.	4126	54	1.43/ --	--	98
	12	3900	2360	--	n.d.	3018	37	17.50/ --	--	100
	15	2320	327	--	trace	4726	61	1.45/ --	--	97
	16	2320	409	--	trace	5305	64	1.75/ --	--	98
Paper passing through dryer without printing	9	3900	353	33	trace	3573	58	2.62/ --	--	99
	10	3900	203	--	n.d.	3397	55	1.50/ --	--	98
Cyls. No. 9, 10 - coated paper	13	2320	783	--	n.d.	3526	37	3.46/ --	--	100
Cyls. No. 13, 14 - uncoated	14	2320	624	--	trace	4240	45	2.75/ --	--	99
4-color, 1-web coated	5	3900	1346	--	trace	2809	62	9.97/25.06	0.40	99
	6	3900	1688	21	trace	2349	48	12.50/25.06	0.50	99
	7	3900	1589	--	trace	3378	65	11.75/19.26	0.61	98
	8	3900	1747	--	trace	4079	69	12.90/19.26	0.67	98
	21	3900	1111	--	trace	3780	62	8.20/19.40	0.42	99
	22	3900	2822	15	trace	4320	73	20.8/ --	--	99
	**23	3900	916	--	n.d.	122	6	6.79/19.40	0.35	100
	***24	3900	811	--	n.d.	278	6	6.00/19.40	0.31	100
2-color, 2-web uncoated	1	2320	1646	--	16	7590	39	7.26/16.0	0.45	97
	2	2320	5977	1	trace	8848	49	26.3/ --	--	99
	3	2320	1077	--	trace	4529	49	4.75/11.75	0.40	99
	4	2320	1050	--	n.d.	4330	55	4.64/11.75	0.39	99
2-color, 1-web coated	17	5600	524	--	n.d.	3731	23	5.57/ --	--	98
	18	5600	710	--	n.d.	3955	25	7.55/ --	--	99
	19	5600	605	--	n.d.	2105	17	6.44/ --	--	100
	20	5600	4767	--	n.d.	2146	16	47.9 / --	--	100

*Only traps used with cylinders Nos. 2, 6, 9, 22 were evaluated for low boilers — high boilers composition.
**Sample suspect, cylinder lost vacuum from time of packing to time of use.
***Sample suspect, found loose fitting next to valve.

TABLE 33
Summary of Analytical Results

[Plant Code No. 4-WO]

Type of Operation	Cylinder No.	Flow Rate (scfm)	Organics Total (ppm)	Organics Low Boilers* (%)	CO (ppm)	CO_2 (ppm)	CH_4 (ppm)	$E_{observed}/E_{calculated}$ (data)	$E_{observed}/E_{calculated}$ (ratio)	Efficiency of Trap (%)
Operation of dryer only	13	5800	68	--	27	7945	74	0.75/ --	--	91
	14	5800	51	--	trace	7673	68	0.56/ --	--	94
	15	5800	114	3	trace	7948	61	1.25/ --	--	96
	16	5800	88	3	trace	7767	58	0.77/ --	--	93
Paper (uncoated) passing through dryer without printing	5	5800	86	--	4	6328	65	0.95/ --	--	93
	6	5800	47	--	trace	6545	69	0.52/ --	--	85
4-color perfecting, 1-web, uncoated	1	5800	686	--	trace	4562	48	7.55/13.95	0.54	99
	2	5800	780	--	trace	5949	64	8.58/13.95	0.62	99
	3	5800	354	--	trace	6126	64	3.89/ 6.81	0.57	98
	4	5800	418	--	2	6269	67	4.60/ 6.81	0.68	99
4-color perfecting, 1-web, coated	8	5800	433	--	trace	5760	60	4.76/13.95	0.34	98
	9	5800	650	--	6	6221	67	7.15/13.95	0.51	99
	10	5800	183	--	trace	6280	55	2.01/ 6.81	0.30	97
	11	5800	180	--	trace	5866	57	1.98/ 6.81	0.29	97
	17	6000	759	--	7	5810	49	8.65/16.71	0.52	99
	18	6000	748	--	trace	5503	48	8.53/16.71	0.51	99
	20	6000	2295	4	trace	5660	48	26.16/28.11	0.93	99
	21	6000	868	--	3	6305	39	9.89/28.11	0.35	99
	23**	6000	19	--	n.d.	314	8	0.22/ --	--	95
	24**	6000	45	--	n.d.	332	11	0.51/ --	--	98
	25	6000	2410	--	trace	5848	50	27.47/34.95	0.79	99
	26	6000	1904	--	trace	5533	47	21.70/34.95	0.62	99
	27	6000	2241	--	14	7007	61	25.54/ --	--	100
	28	6000	2275	--	10	6956	62	25.93/ --	--	99

*Only traps used with Cylinders Nos. 15, 16, 20 were evaluated for low boilers — high boilers composition.
**Sample results suspect, possible press shutdown during sampling.

TABLE 34
Summary of Analytical Results

[Plant Code No. 5-WO]

Type of Operation	Cylinder No.	Flow Rate (scfm)	Organics Total (ppm)	Organics Low Boilers (%)	CO (ppm)	CO_2 (ppm)	CH_4 (ppm)	$E_{observed}/E_{calculated}$ (data)	$E_{observed}/E_{calculated}$ (ratio)	Efficiency of Trap (%)
4-color perfecting, 1-web coated	1	6350	1919	15	trace	5013	7	22.80/30.99	0.74	98
	2	6350	1920	7	trace	5102	7	22.80/30.99	0.74	99
	*11	6350	1402	5	trace	4926	7	* / --	--	98
	*12	6350	558	21	n.d.	2680	4	* / --	--	97
4-color perfecting, 1-web coated, outlet of control equipment, T = 1000°F (t.i.)	3	6350	102	98	191	24699	13	1.20/ --	--	22
	** 4	6350	10127	255	255	24452	14	** / --	--	**
4-color perfecting, 1-web coated, outlet of control equipment, T = 1200°F (t.i.)	5	6350	57	96	89	29918	11	0.68/ --	--	9
	6	6350	151	80	118	29031	11	1.81/ --	--	93
4-color perfecting, 1-web coated, outlet of control equipment, T = 1300°F (t.i.)	7	6350	14	100	4	29881	6	0.17/ --	--	0
	8	6350	23	100	45	32646	6	0.28/ --	--	0
4-color perfecting, 1-web coated, outlet of control equipment, T = 1350°F (t.i.)	9	6350	18	89	111	32202	6	0.22/ --	--	11
	10	6350	48	100	163	31257	7	0.58/ --	--	0

*Samples suspect; press shutdown occurred at unknown time during sampling period.
**Sample result suspect; possible contact with trichloroethylene slurry during sampling period.

TABLE 35
Summary of Analytical Results

[Plant Code No. 6-WO]

Type of Operation	Cylinder No.	Flow Rate (scfm)	Organics Total (ppm)	Organics Low Boilers (%)	CO (ppm)	CO_2 (ppm)	CH_4 (ppm)	$E_{observed}/E_{calculated}$ (data)	$E_{observed}/E_{calculated}$ (ratio)	Efficiency of Trap (%)
4-color, 1-web coated	15	5100	297	41	n.d.	3420	8	2.88/5.85	0.49	99
	16	5100	187	56	n.d.	3335	7	1.78/5.85	0.30	95
	*20	5100	2	0	n.d.	1215	2	*	--	100
	*21	5100	121	24	n.d.	2943	7	*	--	96
4-color, 1-web coated, outlet of control equipment, T = 1000°F (t.i.)	19	5100	18	100	35	22655	23	0.17/ --	--	0
	22	5100	29	83	24	21643	20	0.28/ --	--	21
4-color, 1-web coated, outlet of control equipment, T = 1200°F (t.i.)	17	5100	2	100	trace	26644	19	0.019/ --	--	0
	18	5100	0	0	trace	24093	9	0.000/ --	--	--
4-color, 1-web coated, outlet of control equipment T = 1300°F (t.i.)	**13	5100	2321	100	n.d.	32419	1	**	--	100
	14	5100	0	0	n.d.	32157	2	0.000/ --	--	--

*Samples suspect; press shutdown occurred at unknown time during sampling period.
**Sample result suspect: possible contact with trichloroethylene slurry during sampling period.

TABLE 36
Summary of Analytical Results

[Plant Code No. 7-WO]

Type of Operation	Cylinder No.	Flow Rate (scfm)	Organics Total (ppm)	Organics Low Boilers (%)	CO (ppm)	CO_2 (ppm)	CH_4 (ppm)	$E_{observed}/E_{calculated}$ (data)	$E_{observed}/E_{calculated}$ (ratio)	Efficiency of Trap (%)
1-color perfecting, 2-web uncoated	9	5000	284	6	trace	5510	14	2.69/7.32	0.37	97
	10	5000	297	16	trace	5465	15	2.81/7.32	0.38	98
	11	5000	226	16	trace	2880	7	2.15/ --	--	99
	12	5000	215	6	trace	2956	7	2.05/ --	--	99
1-color perfecting, 2-web uncoated, outlet of control equipment, T = 950°F (c.i.)	*2	5000	849	1	trace	18904	7	4.62/ --		100
	4	5000	4	75	trace	16066	3	0.038/ --	--	100
1-color perfecting, 2-web uncoated, outlet of control equipment, T = 850°F (c.i.)	1	5000	98	28	trace	20723	10	0.93/ --	--	88
	3	5000	6	83	trace	12597	3	0.057/ --	--	67
1-color perfecting, 2-web uncoated, outlet of control equipment, T = 750°F (c.i.)	*5	5000	544	3	trace	14737	8	2.96/ --	--	100
	7	5000	6	50	trace	15908	7	0.057/ --	--	83
1-color perfecting, 2-web uncoated, outlet of control equipment, T = 650°F (c.i.)	*6	5000	905	0	trace	14246	7	4.93/ --	--	100
	8	5000	135	7	trace	18072	6	1.28/ --	--	98
2-color perfecting, 1-web uncoated	**21	9300	89	12	trace	2459	57	1.57/ --	--	91
	22	9300	309	10	trace	3034	89	5.45/ --	--	96
	23	9300	246	13	trace	3149	46	4.33/12.25	0.35	96
	24	9300	255	11	trace	2982	46	4.50/12.25	0.37	97
2-color perfecting, 1-web uncoated, outlet of control equipment, T = 900°F (c.i.)	13	9300	4	50	n.d.	17592	17	0.070/ --	--	75
	14	9300	9	89	trace	17690	32	0.16/ --	--	33
2-color perfecting, 1-web uncoated, outlet of control equipment, T = 800°F (c.i.)	15	9300	7	100	n.d.	15017	38	0.12/ --	--	29
	*16	9300	426	0	trace	15559	17	7.54/ --	--	100
2-color perfecting, 1-web uncoated, outlet of control equipment, T = 700°F (c.i.)	17	9300	15	20	n.d.	13465	18	0.26/ --	--	93
	18	9300	18	6	n.d.	13763	18	0.32/ --	--	100
2-color perfecting, 1-web uncoated, outlet of control equipment, T = 625°F (c.i.)	19	9300	30	27	trace	12006	19	0.53/ --	--	97
	*20	9300	284	2	trace	11268	18	5.02/ --	--	99

*Sample suspect: results show organic outlet loading greater than inlet loading.
**Pressure gauge on sample cylinder indicated loss of vacuum prior to sampling, thus results are suspect.

TABLE 37
Summary of Analytical Results

[Plant Code No. 8-WO (BC)]

Type of Operation	Cylinder No.	Flow Rate (scfm)	Organics Total (ppm)	Organics Low Boilers (%)	CO (ppm)	CO_2 (ppm)	CH_4 (ppm)	$E_{observed}/E_{calculated}$ (data)	$E_{observed}/E_{calculated}$ (ratio)	Efficiency of Trap (%)
5-color perfecting, 1-web coated, inlet to control equipment	18	1400	2085	29	145	8606	241	5.58/16.80	0.33	96
	19	1400	2221	37	144	8714	246	5.92/16.80	0.35	96
	*23	1400	2166	50	67	8081	261	5.76/ --	--	75
	*24	1400	1341	33	46	6167	208	3.58/ --	--	96
5-color perfecting, 1-web coated, outlet of control equipment, T = 1100°F (t.i.)	21	1400	117	100	711	34289	56	0.48/ --	--	3
	22	1400	21	100	n.d.	34582	52	0.05/ --	--	5
5-color perfecting, 1-web coated, outlet of control equipment, T = 1300°F(t.i.)	25	1400	29	100	trace	42453	1	0.08/ --	--	0
	26	1400	36	100	trace	42327	1	0.09/ --	--	0

*Sample results suspect.

TABLE 38
Summary of Analytical Results

[Plant Code No. 9-WO (BC)]

Type of Operation	Cylinder No.	Flow Rate (scfm)	Organics Total (ppm)	Organics Low Boilers (%)	CO (ppm)	CO_2 (ppm)	CH_4 (ppm)	$E_{observed}/E_{calculated}$ (data)	$E_{observed}/E_{calculated}$ (ratio)	Efficiency of Trap (%)
5-color perfecting, 1-web coated, inlet to control equipment	27	3000	2608	13	60	8202	13	14.87/29.50	0.50	97
	28	3000	2641	18	43	8136	13	15.05/29.50	0.51	98
	31	3000	2332	15	18	7512	17	13.28/29.50	0.45	99
	33	3000	2532	14	35	7043	17	14.42/29.50	0.49	98
5-color perfecting, 1-web coated, outlet to control equipment, T = 750°F (c.i.)	34	3000	455	19	121	18110	18	2.56/ --	--	82
	38	3000	261	46	272	18518	17	1.48/ --	--	59
5-color perfecting, 1-web coated, outlet of control equipment, T = 800°F (c.i.)	29	3000	95	86	103	20826	17	0.54/ --	--	19
	30	3000	116	66	141	21335	19	0.66/ --	--	40

TABLE 39
Average Low Boiling Percentages for
Various Web Offset Operations

Operational Characteristics	Sample Temp. (°F)	Organics Total (ppm)	Organics Low Boiler (ppm)	Low Boiler (%)	Dryer Temp. (°F)
d.f.h.a., coated paper	210-340	8420	3211	38	340-400
Thermal incineration (outlet samples)	1000	47	42	89	
	1100	138	138	100	
	1200	2	2	100	
	1300	2386	2386	100	
d.f.h.a. uncoated paper	172-240	1921	216	11	550-600
Catalytic incineration (outlet samples)	625	314	13	4	
	650	1040	11	1	
	700	33	4	12	
	750	550	18	3	
	800	433	8	2	
	850	104	32	31	
	900	13	10	77	
	950	853	8	1	
h.v.h.a., coated paper	240-390	15912	2150	14	450
Catalytic incineration (outlet samples)	750	716	206	29	
	800	211	159	75	
Thermal incineration (outlet samples)	1000	10229	10191	100	
	1200	208	176	85	
	1300	37	37	100	
	1350	66	64	97	

TABLE 40

Summary of Organics Conversion Efficiency Ranges for Web Offset Industry

[Plants coded 5-WO, 6-WO, 7-WO, 8-WO (BC), 9-WO (BC)]

Type of Operation [Plant Code]	Incineration Temperature (°F)	Inlet Concentration (ppm) min. max.	Outlet Concentration (ppm) min. max.	CO_2* Outlet (ppm) min. max.	Efficiency (%) min. max.
Thermal Incineration					
[5-color perfecting, 1-web coated, d.f.h.a. [8-WO (BC)] 4-color perfecting, 1-web coated, h.v.h.a., d.f.h.a. [5-WO, 6-WO]]	1000	187 - 1920	18 - 102	21643 - 24699	87.90 - 94.61
	1100	2085 - 2221	21 - 117	34289 - 34582	94.57 - 99.02
	1200	187 - 1920	0 - 151	24093 - 29918	92.14 - 100.00
	1300	187 - 2221	0 - 36	29881 - 42453	98.34 - 100.00
	1350	1919 - 1920	18 - 48	31257 - 32202	97.49 - 99.10
Range, thermal incineration [5-WO, 6-WO, 8-WO (BC)]	1000 - 1350	187 - 2221	0 - 151	21643 - 42453	87.90 - 100.00
			Average Efficiency, thermal incineration		96%
Catalytic Incineration					
[5-color perfecting, 1-web coated, h.v.h.a. [9-WO (BC)] 2-color perfecting, 1-web uncoated, d.f.h.a. [7-WO] 1-color perfecting, 2-web uncoated, d.f.h.a. [7-WO]]	625	246 - 309	30	11268 - 12006	88.00
	650	215 - 297	135	14246 - 18072	53.45
	700	246 - 309	15 - 18	13465 - 13763	92.80 - 94.00
	750	215 - 2641	6 - 455	14737 - 18518	82.17 - 97.93
	800	246 - 2641	7 - 116	15017 - 21335	95.45 - 97.20
	850	215 - 297	6 - 98	12597 - 20723	62.21 - 97.93
	900	246 - 309	4 - 9	17592 - 17690	96.40 - 98.40
	950	215 - 297	4	16066 - 18904	98.62
Range, catalytic incineration [7-WO, 9-WO (BC)]	625 - 950	215 - 2641	4 - 455	11268 - 21335	53.45 - 98.62
			Average Efficiency, catalytic incineration		89%

*Includes inlet CO_2

TABLE 41
Range of Analytical Results for Web Offset Industry

Type of Operation [Plant Code]	Flow Rate* (scfm)	Organics Total* (ppm)	Organics Low Boilers* (%)	CO* (ppm)	CO_2* (ppm)	CH_4* (ppm)	Σobserved/Σcalculated* (data)	Σobserved/Σcalculated* (ratio)	Efficiency* of Trap (%)
5-color perfecting, 1-web coated, h.v.h.a. [9-WO (BC)]	3000	2332, 2641	13, 18	18, 60	7043, 8202	13, 17	13.28, 15.05/29.50	0.45, 0.51	97, 99
5-color perfecting, 1-web coated d.f.h.a. [8-WO (BC)]	1400	2085, 2221	29, 37	144, 145	8606, 8714	241, 246	5.58, 5.92/16.80	0.33, 0.35	96
4-color perfecting, 1-web coated, h.v.h.a. [4-WO, 5-WO]	5800, 6350	180, 2410	4, 15	n.d., 14	5013, 7007	7, 67	1.98, 27.47/ 6.81, 34.95	0.29, 0.93	97, 100
4-color perfecting, 1-web coated, d.f.h.a. [3-WO, 6-WO]	3900, 5100	187, 1747	21, 56	n.d., trace	2349, 4079	7, 69	1.78, 12.90/ 5.85, 25.06	0.30, 0.67	95, 99
4-color perfecting, 1-web uncoated, h.v.h.a. [4-WO]	5800	354, 780	--	trace, 2	4562, 6269	48, 67	3.89, 8.58/6.81, 13.95	0.54, 0.68	98, 99
2-color, 1-web coated, d.f.h.a. [3-WO]	5600	524, 710	--	n.d.	2105, 3955	17, 25	5.57, 7.55/18.20	0.31, 0.42	98, 100
2-color, 2-web uncoated d.f.h.a. [3-WC]	2320	1050, 1646	--	n.d., 16	4330, 7590	39, 55	4.64, 7.26/11.75, 16.0	0.39, 0.45	97, 99
2-color perfecting, 1-web uncoated, d.f.h.a. [7-WO]	9300	246, 309	10, 13	trace	2982, 3149	46, 89	4.33, 5.45/12.25	0.28, 0.37	96, 97
1-color perfecting, 2-web uncoated d.f.h.a. [7-WC]	5000	215, 297	6, 16	trace	2880, 5510	7, 15	2.05, 2.81/ 7.32	0.28, 0.38	97, 99
Operation of dryer only, d.f.h.a. [3-WC]	2320, 3900	194, 409	--	n.d., trace	4126, 5305	54, 64	1.43, 1.75/ --	--	97, 99
Operation of dryer only, h.v.h.a. [4-WC]	5800	51, 114	-, 3	trace, 27	7673, 7948	58, 74	.56, 1.25/ --	--	91, 96
Paper (coated, uncoated) passing through dryer without printing, [3-WC, 4-WC]	2320, 5800	47, 783	-, 33	n.d., 4	3397, 6545	37, 69	.52, 3.46/ --	--	85, 100

*Values represent minimum, maximum.

Table 41 continued
Range of Analytical Results for Web Offset Industry
ORGANICS EMISSION CONTROL

Type of Operation [Plant Code]	Flow Rate* (scfm)	Organics Total* (ppm)	Organics Low Boilers* (%)	CO* (ppm)	CO_2* (ppm)	CH_4* (ppm)	$\Sigma_{observed}/\Sigma_{calculated}$* (data)	$\Sigma_{observed}/\Sigma_{calculated}$* (ratio)	Efficiency of Trap (%)
Thermal Incineration									
5-color perfecting, 1-web coated, d.f.h.a. T = 1100-1300°F [8-WC (BC)]	1400	21, 117	100	n.d., 711	34289, 42453	1, 56	0.05, 0.48/	-- --	0, 5
4-color perfecting, 1-web coated, d.f.h.a. T = 1000-1300°F [6-WC]	5100	2, 29	0, 100	n.d., 35	21643, 32157	2, 23	0.00, 0.28/	-- --	0, 21
4-color perfecting, 1-web coated, h.v.h.a. T = 1000°-1350°F [5-WC]	6350	14, 151	80, 100	4, 191	24699, 32646	6, 13	0.17, 1.81/	-- --	0, 93
Range, thermal incineration [5-WC, 6-WC, 8-WC (BC)]	1400, 6350	2, 151	0, 100	n.d., 711	21643, 42453	1, 56	0.00, 1.81/	-- --	0, 93
Catalytic Incineration									
5-color perfecting, 1-web coated, h.v.h.a. T = 750-800°F [9-WC (BC)]	3000	95, 455	19, 86	103, 272	18110, 21335	17, 19	0.54, 2.56/	-- --	19, 82
2-color perfecting, 1-web uncoated d.f.h.a. T = 625-900°F [7-WC]	9300	4, 30	6, 100	n.d., trace	12006, 17690	17, 38	0.070, 0.53/	-- --	29, 100
1-color perfecting, 2-web uncoated d.f.h.a. T = 650-950°F [7-WC]	5000	4, 135	7, 83	trace	12597, 20723	3, 10	.038, 1.28/	-- --	67, 100
Range, catalytic incineration [7-WC, 9-WC (BC)]	3000, 9300	4, 455	6, 100	n.d., 272	12006, 21335	3, 38	0.07, 2.56/	-- --	19, 100
SUMMARY									
Range, dryers, all printing operations [3-WC, 4-WC, 5-WC, 6-WC, 7-WC, 8-WC (BC), 9-WC (BC)]	1400, 9300	180, 2641	4, 56	n.d., 145	2105, 8714	3, 246	1.78, 27.47/5.85, 34.95	0.28, 0.93	95, 100
Range, all dryers [3-WC, 4-WC, 5-WC, 6-WC, 7-WC, 8-WC (BC), 9-WC (BC)]	1400, 9300	47, 2641	3, 56	n.d., 145	2105, 8714	7, 246	0.52, 27.47/5.85, 34.95	0.28, 0.93	85, 100
Range, organics emission control operations [5-WC, 6-WC, 7-WC, 8-WC (BC), 9-WC (BC)]	1400, 9300	2, 455	0, 100	n.d., 711	12006, 42453	1, 56	0.00, 2.56/	-- --	0, 100
Range, all web offset operations [3-WC, 4-WC, 5-WC, 6-WC, 7-WC, 8-WC (BC), 9-WC (BC)]	1400, 9300	2, 2641	0, 100	n.d., 711	2105, 42453	1, 246	0.00, 27.47/5.85, 34.95	0.28, 0.93	0, 100

*Values represent minimum, maximum

6.5 Recommendations/Conclusions Based on Web Offset Field Studies

The six tests conducted on web offset presses (controlled and uncontrolled sources) have led to a number of conclusions concerning the factors involved in emission sampling, amount of emission generated and control of organic emissions by corrective equipment. These are summarized below:

1. The two major variables determining the quantity of organic emission are press speed and ink coverage. Reduction of either of these reduces the emission rate. If both factors are known for a given process, an estimate of the emission rate can be made via equation (d), Section 5.63, by substituting for C the appropriate value depending on dryer type as illustrated below:

   $$E\ (d.f.h.a.) = [S_f\ (I \times P) + R]\ (0.40)$$

   $$E\ (h.v.h.a.) = [S_f\ (I \times P) + R]\ (0.60)$$

   Here, the contributions from paper and dryer have been included in the residual (R). It should be understood that the calculated value is a gross estimate and should not be considered as a substitute for a thorough field test.

2. The type of paper used (coated or uncoated) has no effect (within experimental error) on the quantity of emission. However, it may affect the quality — that is, the kinds of organic molecules produced — and this may be crucial in determining whether or not a smoke or odor problem exists.

3. Based on calculated C values, it appears that the direct flame hot air dryer serves to some degree as a more effective oxidizer of solvents than the high velocity hot air dryer. This conclusion assumes that the solvent retention in the ink film and paper is independent of dryer type.

4. The proper operation of the dryer in an emission reduction role should be thoroughly considered in a future emissions study. There remains a serious need to study dryer emissions as a function of combustion control settings and extent of recirculation. Unfortunately, due to the

limited time allotted to a study of the two drying systems, direct flame hot air and high velocity hot air, the degree of emission reduction achievable through the operation of the dryer was not fully evaluated. The extent of recirculation of the gas stream within the various drying systems was not evaluated in the program.

In all cases the testing was conducted on equipment running per normal operation. No advance preparation in the form of dryer tune-ups, etc. was made. It remains conceivable that greater amounts of organic material could be oxidized in the dryer to CO_2 and H_2O than reported in this study, which further indicates the need for regular dryer maintenance or tune-up programs.

5. Based on the systems studied, thermal and catalytic incinerators are effective in reducing organics. (In all cases, at 1100-1200°F for thermal incineration and 700-800°F for catalytic incineration,control units were able to achieve a 95 percent level of organic conversion at the stated incineration temperature.)

6. Based on the emission sampling of both uncontrolled and controlled web offset processes, it appears that sampling in quadruplicate, that is, two sets of duplicate samples may be necessary. The wide range of emission values obtained in several of the duplicate sample sets as sampled coupled with frequent press interruption tend to support this recommendation. Furthermore, there exists a greater assurance of reliability of the sampling results if based on four determinations as opposed to two. Familiarity with the sampling procedure as well as the process under evaluation may tend to reduce this requirement with repeated samplings. Initially, however, it is recommended that a minimum of four samples be collected for the process variable to be evaluated.

7. In the absence of concentration gradients, integrated grab sampling is a simple and effective technique for determining the total organic content of an emission. In the presence of concentration gradients, multiple grab samples should be collected in a pre-determined number of equal areas in order to assure representative sampling of the process. It cannot be over-emphasized that sampling should be conducted only at a point of uniform flow and good mixing so as to provide a greater assurance that the sample obtained will be representative of the process under evaluation.

8. In the conduct of evaluating selective process variables (i.e., reduced solvent ink systems) the measurement of the

contribution of paper and dryer exhaust to the total organic content of the effluent stream cannot be overlooked. Establishment of an adequate background emission level is necessary if one is to be able to distinguish, identify and report on various process modifications as to their effect on the quantity of emitted organics. While it has been demonstrated in the field sampling conducted in this program that the contribution from both paper and dryer exhaust are of a minor nature, they should not be overlooked if a detailed evaluation of the process is desired.

9. The work of Carruthers (74) has shown that the percentage of low-boiling compounds in a web offset emission is higher for direct flame drying than for high velocity type drying, and higher for coated stock than for uncoated. The observation suggest the involvement of a thermal cracking of the hydrocarbons (which produces small, low boiling molecules) would be favored by a coated sheet (where adsorbed molecules would tend to be more exposed than on an uncoated sheet) under high temperatures. Since it is believed that low boilers (74) contribute to the odor problem in web offset printing, the percentage of these compounds in the emission assumes considerable importance.

   In Table 39 (see Section 6.4) data is presented which agrees with the observations of Carruthers. For coated stock passing through a direct flame hot air dryer, the percentage of low boilers is 38; this should be compared with 11 percent for uncoated stock. Data from the high velocity hot air dryer (coated paper) showed only 14 percent low boilers — considerably less than the direct flame hot air dryer.

   Table 39 (see Section 6.4) also gives percentage low boilers derived from thermal and catalytic incinerators. As might be expected, the thermal incinerator, with its higher operating temperature, gave a higher percentage of low boilers.

10. As a recommendation for further study, we suggest that the organic conversion efficiency of a given air pollution control unit be determined as a function of gas cost, that is, that a plot of efficiency versus cost/hour of press time be made. In the studies conducted in this program an assessment of efficiency in terms of temperature was determined. In view of reported fuel shortages throughout the country and in view of the understandable interest of printers in the economics of this control equipment, it would be of extreme value to relate whether an efficiency increment, say from 95 to 97 percent would be worth the additional cost and resource burdens.

In the sampling conducted at the various plants, no single plant metered natural gas separately to the dryer and to the control equipment. It would seem necessary that one be able to measure the input of gas into the system so as to be able to relate it to efficient operation. If a cost versus efficiency study can be conducted it should also include an afterburner unit which supplies a majority of the heat for the dryer through a heat exchanger. The feasibility of field application of this type of system at the present time appears remote.

11. A recent study (94) by J. D. Carruthers, Ambassador College Press, Pasadena, California, has indicated that isopropyl alcohol from Dahlgren type dampening systems may be a contributor to a heatset dryer organic emission. More extensive studies are warranted by these disclosures in terms of in depth evaluation of the contribution of organic products from alcohol dampening systems to the total observed organic emission from a printing press.

7.0 METAL DECORATING FIELD TESTS

7.1 Introduction

The fourth task of the Phase II program effort was directed toward the assessment of emissions from both uncontrolled and controlled metal decorating coating and lithographic operations including the operation of ovens containing no processed metallic sheets. The completed task included a study of the individual and net effect of the various oven combustion products, ink coverage, and the different coating weights and solvent percentages upon the exhausted emissions.

7.2 Experimental Results - Uncontrolled Plants

7.21 Plant Test No. 2-MD (Appendix E)

Field studies were conducted at a metal decorating plant which utilized no air pollution control equipment. This testing followed the sampling program outlined in Table 15, Appendix C.

The sampling procedure previously described in Section 4.0 was followed in the field. Twenty-six samples were collected from a variety of metal decorating operations and were analyzed. All data collected at this plant were coded and assigned an appropriate code No. 2-MD, and can be located in Appendix E. Press operating conditions at the time of sampling were recorded. Sheet sizes, milligram weights of coatings, and press speeds were obtained for each process line studied. In addition, information was obtained from plant personnel on the percent solvent (by weight) for both coatings and inks utilized during the test.

The results of the tests are presented in Data Sheets Nos. 1 through 5, Appendix E, and in summary Table 42, this section. An error in an equation used by CMUPML in calculating results has decreased the reported calculated total sample volume and increased the calculated hydrocarbon content presented on these data sheets (see PML-72-24, Appendix F, for extent of change).

The twenty-six samples were collected in an attempt to define and evaluate the various levels of emission from specific metal decorating operations. Four samples (numbered 3 through 6 consecutively) were collected to determine whether or not emissions from only the heated oven decreased with time (see Table 43, this section). It was found that the total organic content of the stream remained relatively constant over a 40-minute period. Additionally, two samples Nos. 27 and 28, were taken from only a heated coating oven over a 30-minute period with similar results. The

possibility exists that the gas supply to the oven is responsible for nearly all the non-methane hydrocarbons measured. However, further studies will have to be conducted on the effect of an oven's specific operational, structural, or mechanical characteristic upon emitted oven pollution before any conclusive statement can be made.

TABLE 43
Emission from Heated Oven Only
(Effect of Time)

Oven Type	Sample No.	Time (min)	Total Hydrocarbon (ppm)	Total Organics (lb C/hr)
Press	3	0-10	394	0.68
	4	11-20	553	0.93
	5	21-30	445	0.75
	6	31-40	232	0.39
Coating	27	0-15	55	0.24
	28	16-30	96	0.42

Two samples, Nos. 7 and 8, were taken of a one-color lithography with no application of varnish. The level of organics emitted was within the level of background organic emission from only the heated oven. A considerable rise in the level of organic emission was noted for two additional samples, Nos. 1 and 2, taken from the same one-color lithography operation with the inclusion of a trailing varnish coating application. It was concluded that the emission due to metal decorating lithography (printing) with no trailing varnish application is insignificant when compared to emission from subsequently applied varnish, lacquer, or pigmented coatings.

In metal decorating graphic processes, an operation termed "sizing" entails the placement of a thin film of coating on the base metal to insure adherence of additional coating materials to the metallic sheets. Four samples, Nos. 14 through 17, were used to determine the level of emission from this operation.

Four coatings were evaluated (shown on Data Sheet 3-ECD-A, 2-MD, Appendix E). The organic emission rate of the various coating operations in this metal decorating plant tended to fall within certain defined ranges for uncontrolled plants as shown in Table 60, Section 7.4.

An attempt was made to calculate the amount of coating material applied to a metal sheet and to relate this calculated value to an actual usage rate. Plant personnel determined that the amount of coating material consumed for a white alkyd coating application (Samples Nos. 10 and 13 were taken during this period), over a specified period of time, was equivalent to a rate of 15 gallons per hour. For the same period and using known coating process parameters, a calculation, shown below, yielded a result of 12.4 gallons of coating per hour which compared favorably to the estimated usage rate.

1. Sample Calculation: Finding the Amount of Coating Material Applied to a Metal Sheet.

Known quantities:

Sheet size:	26-3/4" x 32-1/2" or 869.375 sq in
Press speed:	68 sheets/min or 4080 sheets/hr
Coating thickness (film wt.):	38.4 mg/4 sq in (essentially dry)
Solvent/solids ratio:	41/59
Density of material:	10.2 lb/gal

(a) $$869.375 \left(\frac{\text{sq in}}{\text{sheet}}\right) \times 4080 \left(\frac{\text{sheets}}{\text{hr}}\right) = 3,547,029.60 \left(\frac{\text{sq in}}{\text{hr}}\right)$$

converted to units of four (4) sq in per hour this becomes

$$\frac{3547029.60}{4} = 886,757.4 \left(\frac{4 \text{ sq in}}{\text{hr}}\right)$$

(b) $$886,575.4 \left(\frac{4 \text{ sq in}}{\text{hr}}\right) \times 38.4 \left(\frac{\text{mg}}{4 \text{ sq in}}\right) / 1000 \text{ mg per gm}$$
$$= 34,051.48 \left(\frac{\text{gms}}{\text{hr}}\right)$$

(c) convert to lb/hr: $34,051.48/453.6 \text{ lb/hr} = 75.07 \frac{\text{lb coating}}{\text{hr}}$ (dry)

(d) solids content of coating = 0.59; $\frac{75.07}{0.59} = 127.2 \frac{\text{lb}}{\text{hr}}$ (wet basis, including coating solids plus solvent)

$$\frac{127.2 \text{ lb coating/hr (wet basis)}}{10.2 \text{ lb/gal}} = 12.4 \text{ gal/hr}$$

Equations were developed in Section 5.61 through 5.63 relating those factors affecting organic emission rate from various metal decorating coating, lacquering, varnishing, and sizing operations

TABLE 42
Summary of Analytical Results

[Plant Code No. 2-MD]

Type of Operation	Cylinder No.	Flow Rate (scfm)	Organics Total (ppm)	Organics Low Boilers (%)	CO (ppm)	CO_2 (ppm)	CH_4 (ppm)	$E_{observed}/E_{calculated}$ (data)	$E_{observed}/E_{calculated}$ (ratio)	Efficiency of Trap (%)
Press oven only, (no lithography, no processed metal sheets)	3	900	394	91	37	7069	1705	0.68/ --	--	69
	4	900	553	44	20	7394	1657	0.93/ --	--	78
	5	900	445	94	21	7159	1733	0.75/ --	--	73
	6	900	232	94	33	7973	1733	0.39/ --	--	48
Coating oven only, (no coating applications, no processed metal sheets)	27	2300	55	64	n.d.	4579	115	0.24/ --	--	87
	28	2300	96	96	trace	4680	118	0.42/ --	--	92
1-color lithography, (no trailing varnish)	7	925	162	94	26	7572	1361	0.27/ --	--	41
	8	925	130	83	31	7284	1387	0.22/ --	--	24
1-color lithography, (with trailing varnish)	1	900	9124	94	68	8515	1707	15.47/39.41	0.39	98
	2	900	8177	96	77	8064	1562	13.94/39.41	0.35	98
Sizing	14	2300	1944	99	trace	6978	325	8.36/44.50	0.19	99
	15	2300	1491	97	trace	7183	328	6.60/44.50	0.15	98
	16	2300	2750	98	trace	7050	292	11.88/44.50	0.27	99
	17	2300	1808	100	trace	6752	305	7.92/44.50	0.18	99
Gold lacquer coating	18	2300	4600	99	trace	6663	88	20.24/56.07	0.36	100
	19	2300	65	77	trace	373	3	0.28/56.07	0.01	100
	22	2300	4206	98	trace	6408	84	18.48/56.07	0.33	100
	24	2300	4288	98	trace	7038	92	18.92/56.07	0.34	100
White alkyd coating	10	2300	4917	96	trace	5785	45	21.56/51.14	0.42	100
	13	2300	4949	92	trace	5820	54	21.78/51.14	0.43	100
Beige alkyd coating	29	2300	3871	92	trace	5514	228	17.02/49.02	0.35	100
	30	2300	3244	93	trace	5926	210	14.25/49.02	0.29	100
	31	2300	2773	93	n.d.	5794	164	12.18/49.02	0.25	100
	32	2300	61	72	trace	5422	195	0.27/49.02	0.01	80
White vinyl coating	25	2300	6997	99	trace	6729	331	30.80/76.00	0.41	100
	26	2300	6095	97	trace	6728	312	26.84/76.00	0.35	100

excluding lithography or printing. The terms of the equations have been defined previously and will not be discussed further in this section.

A comparison between observed (E_{obs}) and calculated (E_{calc}) emission rates are presented in summary Table 42, this section. Plant data are shown on Data Sheet 3-ECD-C, 3-MD, Appendix E.

Representatives of the metal decorating industry have historically questioned the validity of single grab samples being representative of the organic emissions from its graphic operations over extended time periods. Therefore, a controlled experiment was conducted to show the relationship between organic emission levels from a coating process and time. Samples Nos. 29 through 32 were taken from a beige alkyd coating operation during definite time intervals as shown in Table 44. One skid of metal sheets was coated for this test. The press speed, monitored throughout the test period, remained constant at 44 sheets per minute, and the full sheet capacity of the oven was 1080 sheets. Table 44 relates the total number of sheets coated and the number of sheets in the oven (fill level) with elapsed time of the test.

TABLE 44
Oven Capacity With Time

Elapsed Time (min)	No. of Sheets in Oven	Fill Level of Oven
1	44	Essentially empty
12	520	Approximately 1/2 full
24.5	1080	Full
36	540	1/2 half empty
49.0	0	Empty

Table 45 lists the amount of organic emission sampled during progressive time intervals of the test at various fill levels of the oven. Figure 28 (Appendix B) is a graphical correlation of the variables in Table 45.

The distribution of the measured organic emission in Figure 28 is out of phase with the rise and fall of the number of metal sheets in the oven.

Figure 28 represents an ideal run where one skid of metallic sheets passes entirely through the oven before a second skid is introduced. In actuality, skids are introduced consecutively into an oven with a three- to five-minute time interval between skids. Assuming new

TABLE 46

Summary of Analytical Results

[Plant Code No. 3-MD]

Type of Operation	Cylinder No.	Flow Rate (scfm)	Operations Total (ppm)	Operations Low Boilers (%)	CO (ppm)	CO_2 (ppm)	CH_4 (ppm)	$E_{observed}/E_{calculated}$ (data)	$E_{observed}/E_{calculated}$ (ratio)	Efficiency of Trap (%)
1-Color litho (no trailing varnish)	9	3700	64	84	trace	10085	314	0.45 --	--	69
	10	3700	67	67	trace	10299	284	0.47 --	--	73
2-Color litho (no trailing varnish)	5	1700	133	76	26	5306	798	0.27 --	--	58
	6	1700	87	89	37	4960	687	0.42 --	--	43
1-Color litho (with trailing varnish)	7	1700	2140	77	14	11522	425	6.78/ 32.14	0.21	98
	8	1700	2082	77	trace	11238	393	6.72/ 32.14	0.21	98
2-Color litho (with trailing varnish)	11	1700	2185	83	8	10010	229	7.04/ 27.97	0.25	99
	12	1700	1442	77	5	10384	217	4.65/ 27.97	0.17	98
Sizing	17	3000	5573	96	27	6959	459	31.35/ 46.25	0.68	99
	18	3000	5447	96	23	7032	479	30.78/ 46.25	0.67	99
Clear lacquer coating	19	3000	20363	99	17	9411	540	115.71/169.79	0.68	100
	20	3000	21405	99	18	9387	547	121.98/169.79	0.72	100
Gold lacquer coating	1	4200	6052	94	trace	3919	124	48.40/ 73.22	0.66	100
	2	4200	6785	96	trace	4493	135	54.24/ 73.22	0.74	100
Modified phenolic varnish	13	1700	1769	69	trace	9041	11	5.71/ 43.13	0.13	99
	14	1700	1524	61	14	9375	11	4.91/ 43.13	0.11	99
Enamel buff coating	15	2400	20045	97	8	3825	9	91.20/145.72	0.63	100
	16	2400	21684	99	43	3755	9	98.49/145.72	0.68	100
Plasticized white coating	21	4200	8295	99	23	4648	408	66.32/133.15	0.50	100
	22	4200	9137	99	13	4468	390	73.04/133.15	0.55	100
Vinyl white coating	3	3950	7408	97	trace	3706	76	56.24/156.45	0.36	100
	4	3950	13773	98	24	5669	116	104.12/156.45	0.67	100

skids entered the oven every thirty minutes in an actual coating process, emission levels could be depicted as in Figure 29 (Appendix B), assuming a constant air dilution of emission or constant scfm. Figure 29 represents the curve in Figure 28 repeated over a four-hour period, and depicts high organic emission intervals when the emission from coated metallic sheets from two skids in the oven at the same time were added together. Although organic emission levels fluctuated with time, the total emitted organics over an extended time period could be represented by a graphical average.

TABLE 45
Oven Organics Loading With Time

Sample No.	Time Interval (min)	Organic Loading (ppm)	Organic Loading (lb C/hr)	Fill Level of Oven
29	2-12	3871	17.02	0 to one-half full
30	13-23	3244	14.25	one-half to full
31	24-33	2773	12.18	full to one-half empty
32	34-44	61	0.27	one-half empty to empty

7.22 Plant Test No. 3-MD (Appendix E)

Field studies were again conducted at a metal decorating plant which utilized no air pollution control equipment in an attempt to further evaluate metal decorating operations which were not included in the previous plant test (Plant Code No. 2-MD). Twenty-two samples were collected and analyzed for a variety of metal decorating operations. All data collected at this plant were coded appropriately No. 3-MD. Press operating conditions at the time of sampling were recorded. Sheet size, milligram weight of coating, and coater speed were obtained for each process line studied. In addition, information was obtained on the percent solvent (by weight) for both coatings and inks during the test from plant personnel.

The results of the tests are presented in Data Sheets Nos. 1 through 5, 3-MD, Appendix E, and summary Table 46, this section.

All sample sets taken were in duplicate. Two samples, Nos. 5 and 6, were taken of one-color lithography with no application of varnish, and two samples, Nos. 9 and 10, were taken of two-color lithography with no application of varnish. Generally, the level of organic emission determined by analysis (less than 1.0 lb carbon per hour) was within previously determined background emission levels from a heated oven (see 2-MD, section 7.21).

Four additional samples (Nos. 7 and 8; Nos. 11 and 12) taken of the emission from the same one-color and two-color lithography, respectively, with the application of a trailing varnish, produced a considerable rise in the output level of organic emission (e.g. 4.0 to 7.0 lb carbon per hour). It was again concluded that the organic emissions due to lithography (printing) in a metal decorating graphics operation, with no trailing varnish application, was insignificant when compared to the measured levels of emission after applying varnish, lacquer, or pigmented coatings.

In addition to duplicate samples of the sizing operation, samples Nos. 17 and 18, six different coating operations were used for evaluating levels of organic emission. Table 47 shows dry film thickness or weight and percentage of solvent for the various coatings used. The emission from these coatings tend to fall within certain ranges for uncontrolled plants as shown in Table 60, Section 7.4.

TABLE 47
Various Coating Variables

Cylinder No.	Type of Coating	Film Thickness (mg/4 sq in)	Solvent (%)
1 and 2	Gold lacquer	5.5	85.23
13 and 14	Modified phenolic varnish	8.5	70.93
19 and 20	Clear lacquer	16.0	84.64
21 and 22	Plasticized white	37.5	60.62
3 and 4	Vinyl white	41.5	62.66
15 and 16	Enamel buff	47.0	67.54

A comparison between observed (E_{obs}) and calculated (E_{calc}) emission rates is presented in the summary Table 46, this section. Plant data are shown on Data Sheet 3-ECD-C, 3-MD, Appendix E.

7.23 Field Observations

As was the case with the web offset field testing, certain field observations were made by testing personnel during the sampling of the various metal decorating operations. Little, if any visible emission was detected for the lithographic operation, and also when varnish was applied to the printed sheet by means of a trailing coater. However, an odor was detected with the application of varnish, but little, if any, odor was detected from the printing (lithographic) step. Generally, visible emission could be detected for most coatings evaluated, although rarely would the emission level observed be classified as a violation of a visible emission standard.

It seemed that a smoky condition resulted when an oven of rather old vintage was being employed by the plant. One would suspect that an oven not periodically subjected to tests for oven flame combustion efficiency, could have a condition of incomplete or inefficient oven flame combustion occurring with a resultant higher level of emitted pollution and visible emission. This fact was substantiated by field observations (see Section 7.5, D) when the age and maintenance record of the oven was available to GATF sampling personnel. On at least two occasions, a comparison was made of the visible emission from identically processed metal sheets in different ovens at different plant locations. It was noted that the plant which employed a regularly scheduled maintenance program was able to contain the level of visible emission within acceptable standards, whereas the plant utilizing an older, unmaintained oven had a higher level of visible emission. This observation led to a tentative conclusion that a properly balanced and maintained oven can yield a lower level of visible emission.

Odor evaluations of the various coatings employed in the metal decorating process proved a difficult area to assess. Due to prolonged periods of exposure at or near the exit vicinity of stack emission, the ability of sampling personnel to effectively distinguish various odors and levels of concentrations for the various odors was found to be virtually impossible. As was expected, there were distinct odors present when a heavy coverage milligram weight coating with a high percentage of solvent was being run through an oven. As in the web offset studies, if it is found desirable to rate various coatings for odor potential, standard methods of odor evaluation should be initiated and employed (e.g. panel of individuals can be formed to evaluate the various odors).

Several of the more pertinent observations made by the testing crew have been recorded on data sheets found in Appendix D, and listed in Section 7.4 and 7.5, along with pertinent conclusions and recommendations based upon available test data. Again, it is hoped that these observations will impart some additional insight which does not appear in the other sections of this report.

7.3 Experimental Results - Controlled Plants

7.31 Plant Test No. 4-MD (Appendix E)

Field studies were conducted at a metal decorating plant that controlled its organic emission by using thermal incineration. Testing followed the "controlled source" sampling program outlined in Table 15, Appendix C, and included two different process coating lines.

Twenty-six samples were collected at various incineration temperatures. All data collected were coded No. 4-MD, and the sampling and plant evaluation results are presented in Data Sheets Nos. 1 through 5, 4-MD, Appendix E, and summary Table 48, this section.

Cylinders Nos. 1 through 12 were samples of emission resulting from the vinyl phenolic lacquer coating operation. The results of the duplicate samples, Nos. 1 and 2, and Nos. 9 and 10, represented the emission level of the coating process prior to thermal incineration, and an average value of organic emission for these four samples were utilized in calculations later described in this section. Samples Nos. 3 through 8 and Samples Nos. 11 and 12, represent emission levels at the outlet of the control equipment over a range of incineration temperatures (900°F, 1000°F, 1200°F and 1400°F) set by plant personnel using an indicating temperature controller having a thermocouple inserted into the upper quadrant of the control unit chamber. Concurrent determinations for nitrogen oxides (NO_x) were attempted, however, the thickness of the incinerator wall (in excess of 8 inches) prevented the full insertion of the 6-inch detector tube previously used in this type of field evaluation and samples could not be taken.

Table 49 lists incinerator inlet and outlet organic emission levels and CO_2 incinerator outlet emission levels along with corresponding organics conversion efficiencies and temperatures of incineration. Figure 30, shows the change of organic and CO_2 emission levels at the incinerator outlet with changes in incinerator temperatures for the vinyl phenolic lacquer coating operation. An increase in incineration temperature is accompanied by a marked decrease in organic emission levels with a corresponding increase in the level of CO_2 emission. The organics conversion efficiency reached the 95 percent level at an operational incineration temperature range of 1100 to 1200°F.

The overall combustion efficiency of the incinerator (indicated by the amount of CO present in the incinerator outlet exhaust) also increases with increased incineration temperatures (see summary Table 48, this section). The average percentage of the CO outlet value to the average inlet organic loading value, expressed as ppm CO_2, at 900°F was 25 percent; at 1000°F, 20 percent; and at 1200°F, 1.5 percent. No outlet CO was detected at 1400°F. It should be noted that an incinerator operating inefficiently because of faulty maintenance or improper temperature settings can exhaust partially oxidized air pollutants (e.g. CO, NO_x).

TABLE 48
Summary of Analytical Results

[Plant Code No. 4-MD]

Type of Operation	Cylinder No.	Flow Rate (scfm)	Organics Total (ppm)	Organics Low Boilers (%)	CO (ppm)	CO_2 (ppm)	CH_4 (ppm)	$E_{observed}/E_{calculated}$ (data)	$E_{observed}/E_{calculated}$ (ratio)	Efficiency of Trap (%)
Vinyl phenolic lacquer, inlet to control equipment	1	4500	3076	73	10	6388	107	26.35/93.16	0.28	100
	2	4500	2860	73	6	6652	7	24.65/93.16	0.26	100
	9	4500	5780	97	16	7205	103	49.30/93.16	0.53	100
	10	4500	5756	97	11	7021	101	48.45/93.16	0.52	100
Vinyl phenolic lacquer, outlet of control equipment, T = 900°F (t.i.)	11	4500	884	95	1015	26472	95	7.65/ --	--	77
	12	4500	898	34	1063	26847	96	7.65/ --	--	73
Vinyl phenolic lacquer, outlet of control equipment, T = 1000°F (t.i.)	7	4500	440	96	630	26078	91	3.74/ --	--	60
	8	4500	232	94	1169	26594	93	1.95/ --	--	28
Vinyl phenolic lacquer, outlet of control equipment, T = 1200°F (t.i.)	5	4500	57	88	85	32113	67	0.48/ --	--	18
	6	4500	15	100	17	31437	74	0.12/ --	--	0
Vinyl phenolic lacquer, outlet of control equipment, T = 1400°F (t.i.)	3	4500	5	100	n.d.	39082	13	0.04/ --	--	0
	4	4500	1	0	n.d.	40104	14	0.01/ --	--	100
White vinyl coating, inlet to control equipment	15	4600	13574	98	trace	4350	81	118.06/152.15	0.78	100
	16	4600	13323	98	trace	4098	71	115.88/152.15	0.76	100
	*21	4600	12282	97	trace	3782	94	107.01/152.15	0.70	100
	*22	4600	13547	98	4	3912	84	117.79/152.15	0.77	100
	31	4600	15574	98	5	4079	60	135.46/152.15	0.89	100
	32	4600	14462	99	10	4012	57	125.80/152.15	0.83	100
White vinyl coating, outlet of control equipment, T = 900°F (t.i.)	23	4600	126	87	1259	38190	38	1.04/ --	--	45
	24	4600	58	90	882	39846	27	0.50/ --	--	12
White vinyl coating, outlet of control equipment, T = 1000°F (t.i.)	19	4600	5	100	n.d.	37790	27	0.04/ --	--	100
	20	4600	7	100	trace	39015	21	0.06/ --	--	0
White vinyl coating, outlet of control equipment, T = 1200°F (t.i.)	17	4600	77	4	trace	43629	12	0.67/ --	--	96
	18	4600	7	0	n.d.	42059	13	0.06/ --	--	100
White vinyl coating, outlet of control equipment, T = 1400°F (t.i.)	**13	4600	4	0	n.d.	754	3	0.03/ --	--	100
	**14	4600	15	0	n.d.	17004	3	0.13/ --	--	100

*Samples suspect, coater shutdown occurred at unknown time during sampling period.
**Sample results suspect, possible cylinder leakage.

TABLE 49
Comparison of Organic and CO_2 Values With Incineration Temperature

Incineration Temperature Outlet (°F)	Total Organics Inlet[a] (ppm)	Total Organics Outlet[b] (ppm)	CO_2 Outlet[c] (ppm)	Efficiency[d] (%)
900	4368	898 & 884	26659	79.44 & 79.76
1000	4368	440 & 232	26336	89.93 & 94.69
1200	4368	57 & 15	31775	98.70 & 99.66
1400	4368	5 & 1	39593	99.89 & 99.98

a. Average value of all duplicate inlet samples.
b. Individual sample result as taken from lab analysis report.
c. Includes inlet CO_2.
d. For purposes of calculating organic conversion efficiencies, each individual outlet sample was utilized and the corresponding efficiency so noted. The equation utilized in the efficiency calculation can be found in Section 5.7.

Cylinders Nos. 15 through 24, and samples Nos. 31 and 32, were used in determining the levels of emission from the white vinyl coating operation controlled, also,by thermal incineration. Duplicate cylinders, Nos. 15 and 16, Nos. 21 and 22, and Nos. 31 and 32 were used to sample the inlet emission levels to the control unit.

During the period samples Nos. 21 and 22 were being collected, a process shutdown occurred unknown to sampling personnel, and an additional set of cylinders, Nos. 31 and 32, were used to sample the inlet emission level to the control unit. Analytical results for the inlet samples shown in Data Sheet 3-ECD-A, 4-MD, Appendix E, tended to validate the results for samples Nos. 21 and 22. For purposes of organics conversion efficiency calculations, an average value of the inlet sample results were used.

Samples Nos. 13 and 14, Nos. 17 and 18, Nos. 19 and 20, and Nos. 23 and 24 were taken from the outlet of the control equipment over a range of incinerator operational temperatures (900°F, 1000°F, 1200°F and 1400°F) set and recorded by plant personnel using a thermocouple indicating temperature controller.

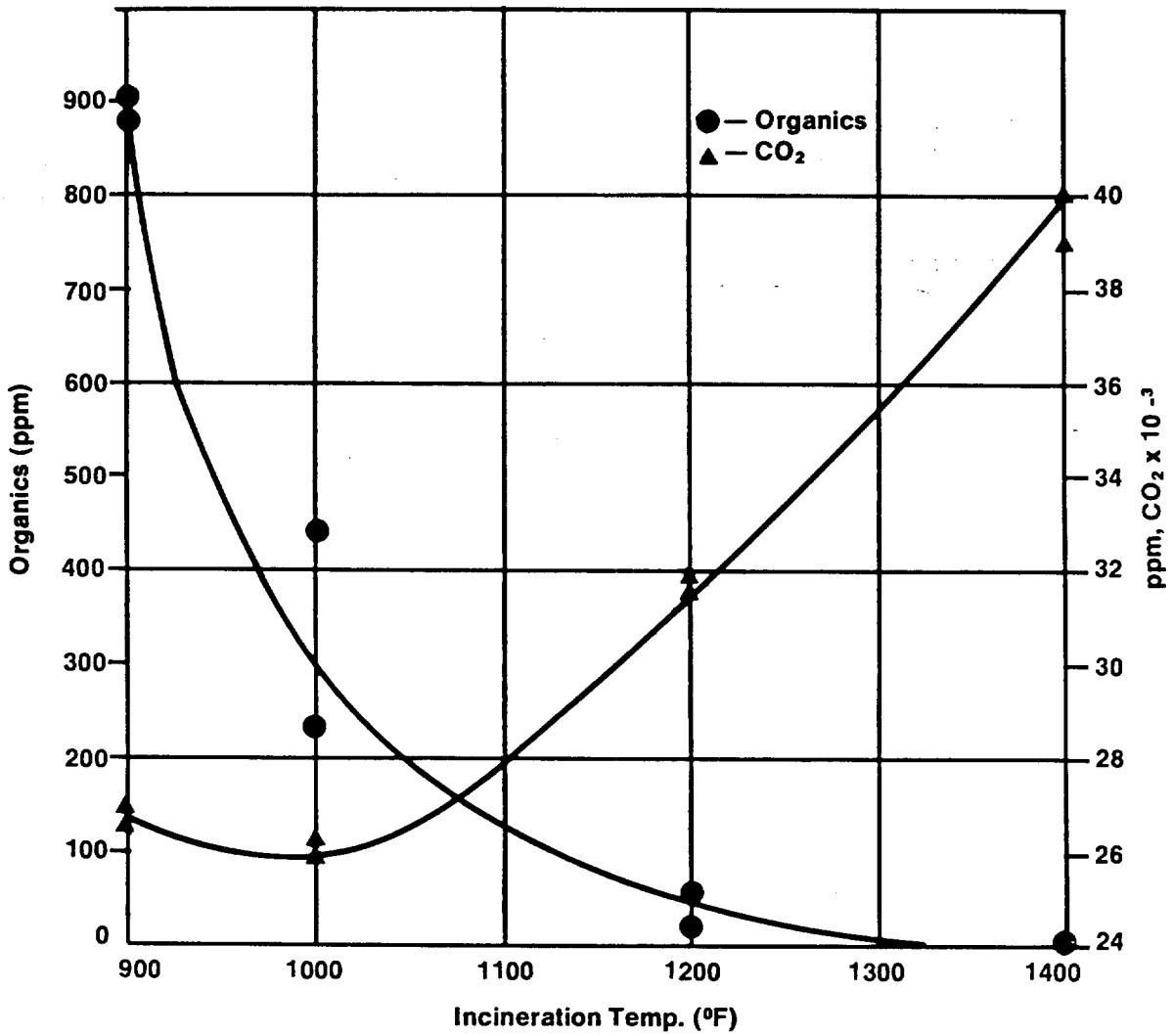

Figure 30 **— Metal Decorating Emissions: Organics, CO_2 (Vinyl Phenolic Lacquer — Thermal Incineration)**

Inlet and outlet organic emission levels, and CO_2 outlet emission levels and corresponding organics conversion efficiencies for various incineration temperatures are listed in Table 50. Concurrent determinations for nitrogen oxides again proved futile because the wall thickness of the incinerator (in excess of 8 inches) prevented insertion of the sampling tube.

Utilizing the data developed in Table 50, Figure 31 was constructed, representing a plot of organic and CO_2 emission levels taken at the control incinerator outlet versus the incineration temperature of the control unit for the white vinyl coating operation. Again, an increase in incineration temperature is accompanied by a decrease in organic emission values and an increase in CO_2 emission level.

Between the operational incineration temperature range of 1000 to 1200°F, the organics conversion efficiency reached a level that is generally greater than 99 percent. The overall combustion efficiency of this control unit, indicated by the amount of CO exhausted, was good for all incineration temperatures except 900°F. Trace to no CO was detected at 1000°F, 1200°F and 1400°F. The average percentage of the outlet CO emission level to average inlet organic emission level, expressed in ppm CO_2, at 900°F is at most 10 percent.

TABLE 50
Comparison of Organic and CO_2 Values With Incineration Temperatures

Incineration Temperature Outlet (°F)	Total Organics Inlet[a] (ppm)	Total Organics Outlet[b] (ppm)	CO_2 Outlet[c] (ppm)	Efficiency[d] (%)
900	13794	126 & 58	39018	99.09 & 99.58
1000	13794	7 & 5	38402	99.95 & 99.96
1200	13794	77 & 7	42844	99.43 & 99.95
1400	13794	15 & 4	8879	99.89 & 99.97

a. Average value of all duplicate inlet samples.
b. Individual sample results as taken from lab analysis report.
c. Includes inlet CO_2.
d. For purposes of calculating organic conversion efficiencies for the thermal incineration unit studied, each individual outlet sample was utilized and the corresponding efficiency so noted in the table. The equation utilized in the efficiency calculation can be found in Section 5.7.

The emission level of the various operations sampled at this plant have values that fall within certain ranges as shown in Table 60, Section 7.4. The two operations evaluated, namely a vinyl phenolic lacquer and a white vinyl coating, fall within the emission range indicated under "coatings."

A comparison between observed (E_{obs}) and calculated (E_{calc}) emission rates are presented in the summary Table 48, this section. Plant data are recorded on Data Sheet 3-ECD-D, 4-MD, Appendix E.

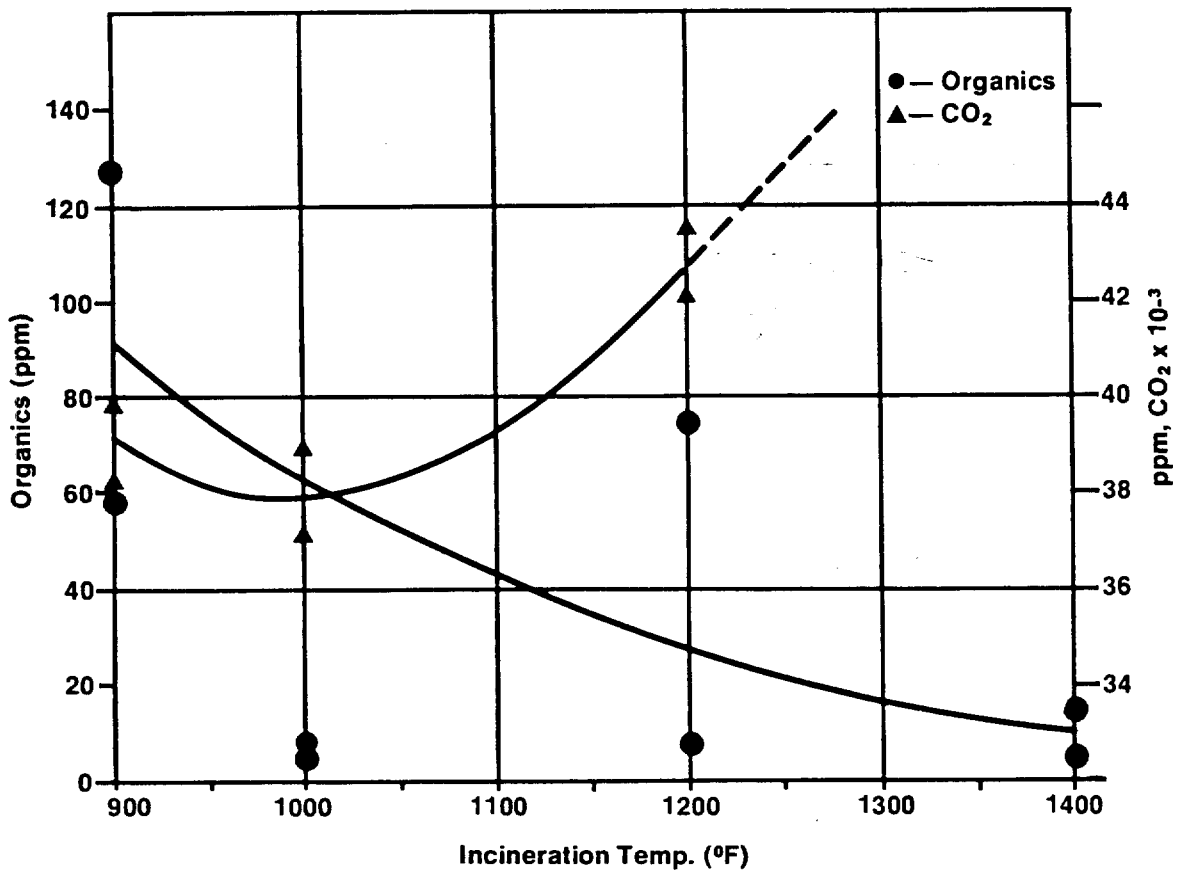

Figure 31 — **Metal Decorating Emissions: Organics, CO_2 (White Vinyl Coating — Thermal Incineration)**

7.32 Plant Test No. 5-MD (Appendix E)

Field studies were conducted at a metal decorating plant utilizing catalytic control incineration. Due to operational difficulties, one process line was utilized in conducting this test, although two lines were originally scheduled for evaluation.

All data collected at this plant had an appropriate code 5-MD assigned. Coating operational conditions at the time of sampling were recorded. The results of the tests are presented in Data Sheets Nos. 1 through 5, 5-MD, Appendix E, and in summary Table 51, this section.

Duplicate samples Nos. 1 and 2, and Nos. 5 and 6, were taken of the emission from the high solids vinyl coating process prior to entering the catalytic incinerator. For purposes of calculations (e.g. control unit organics conversion efficiency) an average value

TABLE 51
Summary of Analytical Results

[Plant Code No. 5-MD]

Type of Operation	Cylinder No.	Flow Rate (scfm)	Organics Total (ppm)	Organics Low Boilers (%)	CO (ppm)	CO_2 (ppm)	CH_4 (ppm)	$E_{observed}/E_{calculated}$ (data)	$E_{observed}/E_{calculated}$ (ratio)	Efficiency of Trap (%)
High solids vinyl, inlet to control equipment	1	4000	2669	87	n.d.	328	15	20.52/88.75	0.23	100
	2	4000	801	44	n.d.	326	14	6.08/88.75	0.07	100
	5	4000	920	61	n.d.	336	12	6.99/88.75	0.08	100
	6	4000	3436	90	n.d.	321	11	25.84/88.75	0.29	100
High solids vinyl, outlet of control equipment, T = 600°F (c.i.)	11	4000	179	77	124	10419	15	1.37/ --	--	27
	12	4000	924	90	97	9714	15	6.99/ --	--	91
High solids vinyl, outlet of control equipment, T = 700°F (c.i.)	9	4000	175	53	240	13364	16	1.34/ --	--	47
	10	4000	81	96	285	13823	17	0.61/ --	--	4
High solids vinyl, outlet of control equipment, T = 800°F (c.i.)	7	4000	151	91	295	14496	19	1.14/ --	--	10
	8	4000	205	97	258	15729	20	1.56/ --	--	9
High solids vinyl, outlet of control equipment, T = 850°F (c.i.)	17	4000	230	97	258	16418	22	1.75/ --	--	25
	18	4000	171	100	250	17363	20	1.30/ --	--	0
High solids vinyl, outlet of control equipment, T = 900°F (c.i.)	3	4000	112	96	351	15906	24	0.85/ --	--	4
	4	4000	147	89	237	15374	23	1.11/ --	--	14
High solids vinyl, outlet of control equipment, T = 950°F (c.i.)	15	4000	32	100	n.d.	17023	26	0.24/ --	--	3
	16	4000	174	55	176	16892	34	1.32/ --	--	58
High solids vinyl, outlet of control equipment, T = 1000°F (c.i.)	13	4000	149	90	216	16444	30	1.13/ --	--	34
	14	4000	156	60	156	17600	33	1.18/ --	--	49

for these four samples was utilized although results of duplicate sets of inlet samples indicated a considerable spread of organic emission values (e.g. 801 to 3436 ppm). The values for the non-condensibles (i.e. range of methane emission level — 11 to 15 ppm; range of CO_2 emission level — 321 to 336 ppm) for these samples tended to validate the fact that they were duplicate samples.

Samples Nos. 3 and 4, and 7 through 18, were taken consecutively at the outlet of the control equipment over a wide range of incinerator operational temperatures (600°F, 700°F, 800°F, 900°F, 950°F) monitored and controlled by plant personnel using an indicating temperature controller with a thermocouple inserted into the duct immediately after the catalyst bed. The calculated efficiencies tended to fall within a range of 89 to 95 percent. Prior studies by various control agencies have shown similar conversion efficiencies to range from 80 to 95 percent for this type of catalytic control equipment.

Shown in Table 52 are the organics and CO_2 emission values and control unit organics conversion efficiencies for various incineration temperatures. Utilizing the data for the high solids vinyl coating operation in Table 52, Figure 32 was constructed, representing the change of organic and CO_2 emission values (taken at incinerator outlet) with change in incineration temperatures of the control unit. An increase in incineration temperature is accompanied by a decrease in organic emission values with a corresponding increase in the emission level of CO_2.

At around a 154 ppm outlet emission level, there is a corresponding organics conversion incineration efficiency of 92 percent between 900 to 1000°F for this particular control unit. The CO output from the control unit, an indication of the overall control unit's combustion efficiency, remained fairly constant over the range of incinerator temperatures, and averaged about 15 percent of the inlet organics loading expressed as ppm CO_2. The average exhaust CO values for the control unit were lower for the 600°F, 950°F and 1000°F incineration temperatures.

Concurrent with each sampling, readings for nitrogen oxides (NO_x) were made using a Universal Testing Kit with negative results. Previous samples taken from web offset thermal incinerators (see Sections 6.32 and 6.33) operating at temperatures from 1000 to 1400°F, indicated the presence of NO_x, and from web offset catalytic incinerators (see Sections 6.34 and 6.35) operating at temperatures from 625 to 950°F indicated no presence of NO_x.

TABLE 52
Comparison of Organic and CO_2 With
Incineration Temperatures

Incineration Temperature Outlet (°F)	Total Organics Inlet[a] (ppm)	Total Organics Outlet[b] (ppm)	CO_2 Outlet[c] (ppm)	Efficiency[d] (%)
600	1957	924 & 179	10066	52.79 & 90.86
700	1957	175 & 81	13593	91.06 & 95.86
800	1957	205 & 151	15112	89.53 & 92.29
850	1957	230 & 171	16890	88.25 & 91.26
900	1957	147 & 112	15640	92.45 & 94.28
950	1957	174 & 32	16957	91.12 & 98.37
1000	1957	156 & 149	17022	92.03 & 92.39

a. Average value of all duplicate inlet samples.
b. Individual sample results as taken from lab analysis report.
c. Includes inlet CO_2
d. For purposes of calculating the organics conversion efficiencies of the catalytic incineration unit studied, each individual outlet sample was utilized and the corresponding efficiency so noted in the table. The equation utilized in the efficiency calculation can be found on Data Sheet 3-ECD-C, 5-MD, Appendix E.

The metal decorating operations evaluated at this plant yielded organic emission values that fall within ranges shown under "coating" in Table 60, Section 7.4. A comparison between observed (E_{obs}) and calculated (E_{calc}) emission rates is presented in the summary Table 51, this section. Plant data are recorded on Data Sheet 3-ECD-D, 5-MD, Appendix E.

The "C" factor, E_{obs}/E_{calc}, for this 5-MD oven is unusually low (0.17), and confirms an on-site observation by field testing personnel that the oven was not performing satisfactorily. It was noted while sampling that a visible emission, estimated Ringelmann range from Nos. 2 to 3, was being exhausted from the "cooling" section of the oven. An imbalance was obviously occurring in the oven so that part of the solvent-laden exhaust stream was exiting from the exhaust stack for the "cooling" section of the oven. Due to this phenomenon occurring, previous or future statements relative to optimum operational incineration temperatures for this incinerator at this plant should be accepted with caution. It is readily apparent from the test results that organics conversion efficiency remained relatively constant over the incineration range of temperatures evaluated.

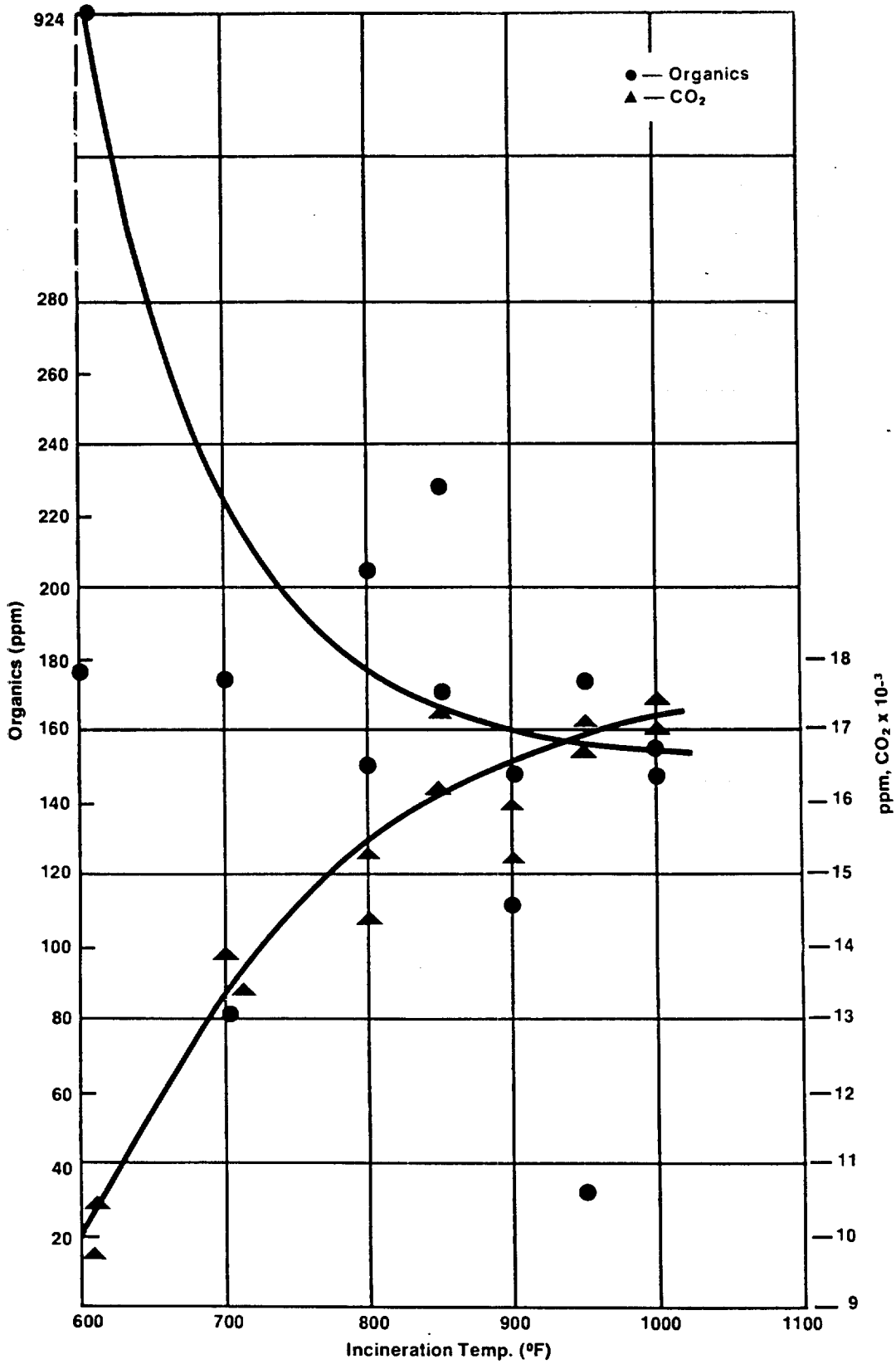

Figure 32 — **Metal Decorating Emissions: Organics, CO_2 (High Solids Vinyl — Catalytic Incineration)**

CMUPML analytical results indicated that the cold trap on the sampling unit may not have been functioning properly because of the amount of low-boiling material detected in the cylinders. The type of material under evaluation, namely a high solids vinyl, could have been responsible for these high cylinder organics values. Since all traps were cooled according to standard GATF methods and this phenomenon had not occurred on previous sampling trips, there was no reason to suspect the efficiency of the trap in sampling metal decorating operations.

7.33 Field Observations

In field evaluations of thermal and catalytic incinerators utilized on metal decorating processes, both types of control units controlled smoke and odor emission equally well. At operational temperatures of 750-800°F for catalysis, and 1100-1200°F for thermal type units, no visible emission could be detected.

Odor, on the other hand, was not as easily identifiable, although determinations were conducted at various incineration temperature settings. Generally, it appeared that at lower incineration temperatures than those stated above, odor was prevalent to some degree. This would suggest that there is a level to which incineration temperatures can be reduced and still effectively eliminate odorous emissions. Local regulatory agencies should thoroughly evaluate odor emission levels at various incineration temperatures before recommending or imposing high temperatures of incineration to eliminate odor.

While the ability to achieve a high degree of organics conversion efficiency with both catalytic and thermal incineration units is certainly feasible, the possibility of introducing additional contaminants generated as a result of achieving the high degree of organics cleanup cannot be minimized. An attempt has been made throughout this report to recommend for consideration realistic operational standards when using emission control equipment.

7.4 Summary Tables

Summary tables for all metal decorating plants utilized in this Phase II study excluding plants MD-P-1 and MD-1, which were primarily used to evaluate, improve and further develop GATF's method of sampling and analysis, are presented in this section. These summary tables include ranges of analytical results, organics conversion efficiencies of air pollution equipment, and operational characteristics of the various types of metal decorating graphic processes.

TABLE 53
Summary of Analytical Results

[Plant Code No. 6-MD (BC)]

Type of Operation	Cylinder No.	Flow Rate (scfm)	Organics Total (ppm)	Organics Low Boilers (%)	CO (ppm)	CO_2 (ppm)	CH_4 (ppm)	$E_{observed}/E_{calculated}$ (data)	$E_{observed}/E_{calculated}$ (ratio)	Efficiency of Trap (%)
Acrylic white coating, (inlet to control equipment)	1	7400	16534	16	trace	7160	72	222.41/271.25	0.82	100
	2	7400	8326	97	trace	6188	50	116.98/271.25	0.43	100
	3	7400	5164	96	38	8984	11	72.55/271.25	0.27	100
	4	7400	10347	98	trace	8507	33	145.38/271.25	0.54	100
Acrylic white coating, (outlet of control equipment, T = 700°F) (c.i.)	5	7400	30	100	42	17569	41	0.42/ --	--	0
	6	7400	44	100	56	16876	45	0.62/ --	--	20
Acrylic white coating, (outlet of control equipment, T = 800°F) (c.i.)	8	7400	43	100	140	28314	33	0.62/ --	--	19
	9	7400	180	96	164	27619	31	2.53/ --	--	69

TABLE 54
Summary of Analytical Results

[Plant Code No. 7-MD (BC)]

Type of Operation	Cylinder No.	Flow Rate (scfm)	Organics Total (ppm)	Organics Low Boilers (%)	CO (ppm)	CO_2 (ppm)	CH_4 (ppm)	$E_{observed}/E_{calculated}$ (data)	$E_{observed}/E_{calculated}$ (ratio)	Efficiency of Trap (%)
Oleoresinous enamel coating, inlet to control equipment	10	5725	3474	82	143	8926	71	37.82/55.29	0.68	99
	11	5725	2894	95	181	9030	68	31.61/55.29	0.57	99
Oleoresinous enamel coating, outlet of control equipment, T = 1100°F (t.i.)	16	5725	188	96	548	28570	210	2.04/ --	--	9
	17	5725	102	100	349	30146	198	1.11 --	--	2
Oleoresinous enamel coating, outlet of control equipment, T = 1300°F (t.i.)	14	5725	25	100	trace	36964	109	0.27/ --	--	0
	15	5725	35	100	127	36827	120	0.38 --	--	0
Oleoresinous enamel coating, outlet of control equipment, T = 1480°F (t.i.)	12	5725	46	98	877	37700	107	0.50/ --	--	4
	13	5725	20	100	702	38977	60	0.21/ --	--	0

TABLE 55
Metal Decorating Plant Descriptions

Plant Identification	Plant Description
2-MD	Wagner press and coating, d.f.h.a., circulating oven, 5 x 10^6 Btu/hr; no separate metering of gas, continuous monitoring and regulation of temperature in oven zones.
3-MD	Wagner, Young Brothers oven, 5 x 10^6 Btu/hr; no separate metering of gas; ovens old; continuous monitoring, recording and regulation of various oven zones.
4-MD Vinyl Phenolic Lacquer line	Wagner direct flame; recirculatory oven, 5 x 10^6 Btu/hr; no separate metering of gas, continuous monitoring and regulation of temperatures in oven zones. Emission controlled by Model 480-AH-0 (Combustion Heat and Power, Inc.) utilizing an eclipse burner rated at 5000 scfm; 8000-9000 cu ft/hr, 9 x 10^6 Btu/hr; two-years old; capital cost = $10000; installation cost = $8000; fuel cost = $850 per month based upon two shifts, five-day operation.
White Vinyl Coating line	Wagner direct flame, circulating oven, 5 x 10^6 Btu/hr: no separate metering of gas, continuous monitoring and regulation of temperatures in oven zones. Emission controlled by Model 480 (Combustion Heat and Power, Inc.) utilizing an eclipse burner, rated at 5000 scfm; 7000-8000 cu ft/hr; 9 x 10^6 Btu/hr; 1-year old; capital cost = $15000; installation cost = $7000; fuel cost $850 per month based upon two shifts, five-day operation.
5-MD	J. O. Ross oven, 5 x 10^6 Btu/hr; oven is relatively old and appears to need considerable maintenance and proper balancing. Emission controlled by Oxy-Catalyst, Inc. catalytic incinerator, oxidation model No. TL-50-H-400 (serial No. 702461001), rated at 5000 scfm; 1-bed unit; burner capacity = 5 x 10^6 Btu/hr; gas consumption = 1640 cu ft/hr; 1-year old; capital cost = $17500; installation cost = $7750; fuel cost = $9300 per year.
6-MD (BC)	FECO-Young Bros. oven, model No. 6914; 5 x 10^6 Btu/hr; oven is older design. Emission controlled by UOP catalytic incinerator, model No. NRC-10-D3, with new E.I. duPont catalytic bed; rated at 9000 scfm; maximum designed catalysis temperature = 900°F; gas consumption = 1600 cu ft/hr; unit 2-years old, catalytic bed, 1-year old; capital cost = $21000; installation cost = $4000; fuel cost $700 per month.
7-MD (BC)	Wagner, direct flame, circulating oven; no separate metering of gas; temperature of oven zones continuously monitored and regulated. Emission controlled by Combustion Heat and Power Co. thermo-direct, gas-fired, fume incinerator, model No. 120-AH-DP; rated at 6000 scfm; designed for 0.5 second dwell time for temperature of 800-1600°F, capacity of burner unit = 1.2 x 10^6 Btu/hr; gas consumption = 1500 cu ft/hr; 6-months old; capital cost = $24000; installation cost $4550; fuel cost = $8500 per year based upon a two-shift, five-day week operation.

TABLE 56
Graphic Process Variables for Metal Decorating Industry

Plant Code	Type of Operation	Solvent/Solid Ratio by Weight	Sheet Area (sq in)	Coater Speed (sh/hr)	Applied Film Wt., Dry Coatings (mg/sq in)	Printing (lb/sh)	Oven Equipment Air Flow* (scfm)	Oven Equipment Bake Temp. (°F)	Flue Gas or Exhaust Temp. (°F)
2-MD									
	Press oven only, (no lithography, no processed metal sheets)	--	--	--	--	--	900	360 - 390	210
	Coating oven only, (no coating application, no processed metal sheets	--	--	--	--	--	2300	360 - 390	250
	1-color (pink) litho, no trailing varnish	.15/.85	852.2	3420	--	0.00075	925	360 - 390	210
	1-color (black) litho, with trailing varnish	.635/.365	852.2	3420	3.5	0.00075	900	360 - 390	210
	Sizing	.82/.18	790.2	3990	1.2	--	2300	360 - 390	270
	Gold lacquer coating	.75/.25	901.3	3705	2.6	--	2300	360 - 390	250
	White alkyd coating	.41/.59	869.4	3876	9.6	--	2300	360 - 390	250
	Beige alkyd coating	.43/.57	748.1	2508	13.0	--	2300	360 - 390	250
	White vinyl coating	.60/.40	951.7	3990	8.1	--	2300	360 - 390	270
3-MD									
	1-color (red) litho, no trailing varnish	.15/.85	827.2	3762	--	0.00075	3700	290 - 390	170
	2-color (black & Blue) litho, no trailing varnish	.15/.85	645.7	3705	--	0.0010	1700	290 - 390	170
	1-color (red) litho, with trailing varnish	.618/.382	714.9	3705	2.75	0.00075	1700	290 - 390	170
	2-color (black & blue) litho, with trailing varnish	.539/.461	645.7	3705	2.75	0.0010	1700	290 - 390	170
	Sizing	.825/.175	675.9	4674	1.0	--	3000	290 - 390	150
	Gold lacquer coating	.852/.148	876.0	4674	1.375	--	4200	290 - 390	160
	Clear lacquer coating	.825/.175	700.0	4674	4.0	--	3000	290 - 390	150
	Modified phenolic varnish	.709/.291	867.8	4218	2.125	--	1700	290 - 390	260
	Enamel Buff coating	.675/.325	867.8	4218	11.75	--	2400	290 - 390	130
	White vinyl coating	.626/.374	876.0	4674	10.375	--	3950	290 - 390	160
	Plasticized white coating	.606/.394	645.7	4674	9.375	--	4200	290 - 390	160

*Rated or calculated

Table 56 continued
Graphic Process Variables for Metal Decorating Industry

Plant Code	Type of Operation	Solvent/Solid Ratio by Weight	Sheet Area (sq in)	Coater Speed (sh/hr)	Applied Film Wt., Dry Coatings (mg/sq in)	Printing (lb/sh)	Oven Equipment Air Flow* (scfm)	Oven Equipment Bake Temp. (°F)	Flue Gas or Exhaust Temp. (°F)
4-MD									
	Vinyl phenolic lacquer	.783/.217	1162.7	3990	2.25	--	4500	375	250
	White vinyl coating	.527/.473	1072.8	3705	11.25	--	4600	350	250
5-MD									
	High solids vinyl	.35/.65	915.2	3420	24.75	--	4000	360	300
6-MD (BC)									
	Acrylic white coating	.30/.70	1445.5	4845	12.25	--	7400	300	305
7-MD (BC)									
	Oleoresinous enamel coating	.54/.46	688.8	5073	3.3	--	**7400	360	320

*Rated or calculated
**7400 cfm at 170°F discharge temperature

TABLE 57
Average Low-Boiling Percentages for
Various Metal Decorating Operations

Type of Operation	Sample Temperature(s) (°F)	Organics Total (ppm)	Organics Low Boilers (ppm)	Low Boilers (%)	Bake Temperature(s) (°F)
Press oven only (no lithography, no processed metal sheet)	210	1624	1237	76	360-390
Coating oven only (no coating application, no processed metal sheet)	250	151	127	84	360-390
1- or 2-color litho (no varnish)	170-210	643	538	84	290-390
1- or 2-color litho (with varnish)	170-210	25150	22582	90	290-390
Sizing	150-270	19013	18512	97	290-390
Coating					
A. Lacquers					
clear	150	41768	41352	99	290-390
gold	160-250	25996	25106	97	290-390
vinyl phenolic	250	17472	15530	89	370
Outlet samples, thermal incinerator (vinyl phenolic lacquer)	900	1782	1146	64	370
	1000	672	642	96	370
	1200	72	65	90	370
	1400	6	5	83	370
B. Varnishes					
Modified phenolic varnish	260	3293	2151	65	290-390
C. Other Coatings					
beige alkyd	250	9949	9184	92	360-390
white alkyd	250	9866	9313	94	360-390
Buff enamel	130	41729	40916	98	290-390
Oleoresinous enamel	320	6368	5597	88	360
Outlet samples, thermal incinerator (oleoresinous enamel)	1100	290	282	97	360
	1300	60	61	100	360
	1480	66	65	98	360
High solids vinyl	300	7826	6330	81	360
Outlet samples, catalytic incinerator (high solids vinyl)	600	1103	986	89	360
	700	256	170	66	360
	800	356	337	95	360
	850	401	395	99	360
	900	259	238	92	360
	950	206	128	62	360
	1000	305	227	74	360
White vinyl	160-270	117035	114626	98	290-390
Outlet samples, thermal incineration (white vinyl)	900	184	161	88	290-390
	1000	12	12	100	290-390
	1200	84	3	4	290-390
	1400	19	0	0	290-390
Acrylic white	305	40371	25746	64	300
Outlet samples, catalytic incineration (acrylic white)	700	74	74	100	300
	800	223	215	96	300
Plasticized white	160	17432	17264	99	290-390

			Average Low Boilers (%)
Total, all oven stack samples	385686	356111	92
Total, outlet to control equipment	6430	5212	81*
Thermal incineration			75
Catalytic incineration			87

*Coatings only

TABLE 58

Summary of Organics Conversion Efficiency Ranges for Metal Decorating Industry

[Plants coded 4-MD, 5-MD, 6-MD (BC), 7-MD (BC)]

Type of Operation [Plant Code]	Incineration Temperature (°F)	Inlet Concentration (ppm) min.	Inlet Concentration (ppm) max.	Outlet Concentration (ppm) min.	Outlet Concentration (ppm) max.	CO_2* Outlet (ppm) min.	CO_2* Outlet (ppm) max.	Efficiency (%) min.	Efficiency (%) max.
Thermal Incineration									
[Oleoresinous enamel coating [7-MD (BC)] Vinyl phenolic lacquer [4-MD] White vinyl coating [4-MD]]	900	2860	15574	58	898	26472	39846	79.44	99.58
	1000	2860	15574	5	440	26078	39015	89.93	99.96
	1100	2894	3474	102	188	28570	30146	94.10	96.80
	1200	2860	15574	7	77	31437	43629	98.70	99.95
	1300	2894	3474	25	35	36827	36964	98.90	99.20
	1400	2860	15574	1	15	39082	40104	99.89	99.98
	1480	2894	3474	20	46	37700	38977	98.56	99.38
Range, thermal incineration [4-MD, 7-MD (BC)]	900 - 1480	2860	15574	1	898	26078	43629	79.44	99.98
Average Efficiency, thermal incineration									97%
Catalytic Incineration									
[Acrylic white coating [6-MD (BC)] High solids vinyl [5-MD]]	600	801	3436	179	924	9714	10419	52.79	90.86
	700	801	16534	30	175	13364	17569	91.06	99.70
	800	801	16534	43	205	14496	28314	89.53	99.56
	850	801	3436	171	230	16418	17363	88.25	91.26
	900	801	3436	112	147	15374	15906	92.45	94.28
	950	801	3436	32	174	16892	17023	91.12	98.37
	1000	801	3436	149	156	16444	17600	92.03	92.39
Range, catalytic incineration [5-MD, 6-MD (BC)]	600 - 1000	801	3436	30	924	9714	28314	52.79	99.70
Average Efficiency, catalytic incineration									90%

*Includes inlet CO_2

TABLE 59

C Value (E_{obs}/E_{calc}) Ranges for
General Metal Decorating Graphic Processes

Coating or Operation	Plant Code No.	E_{obs}/E_{calc} (min)	E_{obs}/E_{calc} (max)	% Solvent (min)	% Solvent (max)
1-color litho with trailing varnish 2-color litho with trailing varnish	2-MD 3-MD 3-MD	0.17	0.39	53.9	63.5
Sizing	2-MD 3-MD	0.15	0.68	82	82.5
Clear lacquer Gold lacquer 3-MD and Vinyl phenolic lacquer	3-MD 2-MD 4-MD	0.26	0.74	75	85.2
Modified phenolic varnish	3-MD	0.11	0.13	70.9	
Beige alkyd coating White alkyd coating	2-MD 2-MD	0.25	0.43	41	43
Enamel buff coating	3-MD	0.63	0.68	67.5	
Oleoresinous enamel coating	7-MD (BC)	0.57	0.68	54	
High solids vinyl coating	5-MD	0.07	0.29	35	
White vinyl coating White vinyl coating White vinyl coating	2-MD 3-MD 4-MD	0.35	0.89	52.7	62.6
Acrylic white coating	6-MD (BC)	0.27	0.82	30	
Plasticized white coating	3-MD	0.50	0.55	60.6	

TABLE 60

Range of Analytical Results for Metal Decorating Facilities

Type of Operation [Plant Code]	Flow Rate* (scfm)	Organics Total* (ppm)	Organics Low Boilers* (%)	CO* (ppm)	CO_2* (ppm)	CH_4* (ppm)	[illegible]* (ppm)	[illegible]* (ppm)	[illegible] (%)
Press oven only, (no lithography, no processed metal sheets) [2-MD]	900	232, 553	44, 94	20, 37	7009, 7473	1657, 1733	0.39, 0.93/	--	--	44, 79
Coating oven only, (no coating application, no processed metal sheets) [2-MD]	2300	55, 96	64, 96	n.d., trace	4579, 4680	115, 118	-0.24, 0.42/	--	--	37, 92
1- or 2-color lithography, (no trailing varnish) [2-MD, 3-MD]	925, 3700	64, 162	67, 94	trace, 37	4960, 10299	284, 1387	0.22, 0.47/	--	--	24, 73
1- or 2-color lithography, (with trailing varnish) [2-MD, 3-MD]	900, 1700	1442, 9124	77, 96	trace, 77	8064, 11522	217, 1707	4.65, 15.47/27.97, 39.14	0.17, 0.39	98, 99
Sizing [2-MD, 3-MD]	2300, 3000	1491, 5573	96, 100	trace, 27	6752, 7183	292, 479	6.60, 31.35/44.50, 46.25	0.15, 0.68	98, 99
COATING									
A. Lacquers									
Clear lacquer coating [3-MD]	3000	20363, 21405	99	17, 18	9387, 9411	540, 547	115.71, 121.98/169.79	0.68, 0.72	100
Gold lacquer coating [2-MD, 3-MD]	2300, 4200	4206, 6785	94, 99	trace	3919, 7038	84, 135	18.48, 54.24/56.07, 73.22	0.33, 0.74	100
Vinyl phenolic lacquer [4-MD]	4500	2860, 5780	73, 97	6, 16	6388, 7205	7, 103	24.65, 49.30/93.16	0.26, 0.53	77, 100
Range, lacquers [2-MD, 3-MD, 4-MD]	2300, 4500	4206, 21405	73, 99	trace, 18	3919, 9411	7, 547	18.48, 121.98/56.07, 169.79	0.26, 0.74	77, 100
B. Varnishes									
Modified phenolic varnish [3-MD]	1700	1524, 1769	61, 69	trace, 14	9041, 9375	11	4.91, 5.71/43.13	0.11, 0.13	99
Range, varnishes [3-MD]	1700	1524, 1769	61, 69	trace, 14	9041, 9375	11	4.91, 5.71/43.13	0.11, 0.13	99
C. Other Coatings									
Beige alkyd coating [2-MD]	2300	2773, 3871	92, 93	n.d., trace	5422, 5926	164, 228	12.18,17.02/49.02	0.25, 0.35	80, 100
White alkyd coating [2-MD]	2300	4917, 4949	92, 96	trace	5785, 5820	45, 54	21.56, 21.78/51.14	0.42, 0.43	100
Range, alkyd coatings [2-MD]	2300	2773, 4949	92, 96	n.d., trace	5422, 5926	45, 228	12.18, 21.78/49.02, 51.14	0.25, 0.43	80, 100
Buff enamel coating [3-MD]	2400	20045, 21684	97, 99	8, 43	3755, 3825	9	91.20, 98.49/145.72	0.63, 0.68	100
Oleoresinous enamel coating [7-MD (BC)]	5725	2894, 3474	82, 95	143, 181	8926, 9030	68, 71	31.61, 37.82/55.29	0.57, 0.68	99
Range, enamel coatings [3-MD, 7-MD (BC)]	2400, 5725	2894, 21684	82, 99	8, 181	3755, 9030	9, 71	31.61, 98.49/55.29, 145.72	0.57, 0.68	99, 100

*Values represent minimum, maximum.

continued

Table 60 continued
Range of Analytical Results for Metal Decorating Industry

Type of Operation [Plant Code]	Flow Rate* (scfm)	Organics Total* (ppm)	Low Boilers* (%)	CO* (ppm)	CO_2* (ppm)	CH_4* (ppm)	$E_{observed}/E_{calculated}$* (data)	(ratio)	Efficiency of Trap* (%)
Other Coatings continued									
High solids vinyl coating [5-MD]	4000	801, 3436	44, 90	n.d.	321, 336	11, 15	6.08, 25.84/88.75	0.07, 0.29	100
White vinyl coating [2-MD, 3-MD, 4-MD]	2300, 4600	6095, 15574	97, 99	trace, 24	3706, 6729	57, 331	26.84, 135.46/76.00, 156.45	0.35, 0.89	100
Range, vinyl coatings [2-MD, 3-MD, 4-MD, 5-MD]	2300, 4600	801, 15574	44, 99	n.d., 24	321, 6729	11, 331	6.08, 135.46/76.00,156.45	0.07, 0.89	100
Acrylic white coating [6-MD (BC)]	7400	5164, 16534	16, 98	trace, 38	6188, 8984	11, 72	72.55, 222.41/271.25	0.27, 0.82	100
Plasticized white coating [3-MD]	4200	8295, 9137	99	13, 23	4468, 4648	390, 408	66.32, 73.04/133.15	0.50, 0.55	100
Range, other coatings [2-MD, 3-MD, 4-MD, 5-MD, 6-MD (BC), 7-MD (BC)]	2300, 7400	801, 21684	16, 99	n.d., 181	321, 9030	9, 408	6.08, 222.41/49.02, 271.25	0.07, 0.89	80, 100
ORGANICS EMISSION CONTROL									
A. Thermal Incineration									
Vinyl phenolic lacquer T = 900-1400°F [4-MD]	4500	1, 898	0, 100	n.d., 1169	26078, 40104	13, 96	0.01, 7.65/	-- --	0, 100
Oleoresinous enamel coating T = 1100-1480°F [7-MD (BC)]	5725	20, 188	96, 100	trace, 877	28570, 38977	60, 210	0.21, 2.04/	-- --	0, 9
White vinyl coating T = 900-1400°F [4-MD]	4600	5, 126	0, 100	n.d., 1259	37790, 43629	12, 38	0.04, 1.04/	-- --	0, 100
Range, thermal incineration [4-MD, 7-MD (BC)]	4500, 5725	1, 898	0, 100	n.d., 1259	26078, 43629	12, 210	0.01, 7.65/	-- --	0, 100
B. Catalytic Incineration									
Acrylic white coating T = 700-800°F [6-MD (BC)]	7400	30, 180	96, 100	42, 164	16876, 28314	31, 45	0.42, 2.53/	-- --	0, 69
High solids vinyl coating T = 600-1000°F [5-MD]	4000	32, 924	53, 100	n.d., 351	9714, 17600	15, 34	0.24, 6.99/	-- --	0, 91
Range, catalytic incineration [5-MD, 6-MD (BC)]	4000, 7400	30, 924	53, 100	n.d., 351	9714, 28314	15, 45	0.24, 6.99/	-- --	0, 91
SUMMARY									
Range, all coating operations [2-MD, 3-MD, 4-MD, 5-MD, 6-MD (BC), 7-MD (BC)]	1700, 7400	801, 21684	16, 99	n.d., 181	321, 9411	7, 547	4.91 , 222.41/43.13, 271.25	0.07, 0.89	77, 100
Range, all organics emission control operations [4-MD, 5-MD, 6-MD (BC), 7-MD (BC)]	4000, 7400	1, 924	0, 100	n.d., 1259	9714, 43629	12, 210	0.01, 7.65/	-- --	0, 100
Range, all metal decorating operations [2-MD, 3-MD, 4-MD, 5-MD, 6-MD (BC), 7-MD (BC)]	900, 7400	1, 21684	0, 100	n.d., 1259	321, 43629	7, 1733	0.01, 222.41/27.97, 271.25	0.07, 0.89	0, 100

*Values represent minimum, maximum.

7.5 Conclusions/Recommendations on Metal Decorating Field Studies

The six plant tests conducted on metal decorating processes (controlled and uncontrolled sources) during the Phase II study have led to a number of conclusions concerning the factors involved in emission sampling, amount of emission generated, and control of organic emissions by corrective equipment. These are summarized below.

A. The speculation that little organics emission was attributable to the high solids ink was verified by results from collected data. Most organics emission is from varnishes, lacquers, sizing and other coating materials which dry by solvent release.

B. The major variables affecting the organics emission from metal decorating coating operations are the solvent fraction in the coating, coated sheet area, applied film or coating weight (e.g. dry weight, mg per four square inches), and coater speed or sheets coated per hour. All these factors have been correlated in a previously derived equation (see Section 5.62, B, and 5.63). This equation can be used to determine expected organics emission rate (E_{obs}), in lbs carbon per hour, from metal decorating ovens for specific coating operations if the C values (E_{obs}/E_{calc}) for those ovens are known. It should be noted that if expected organics emission from air pollution control equipment is also to be determined, the organics conversion efficiency or range of organics conversion efficiency for the control unit would likewise have to be known (see Table 58, Section 7.4).

C. Summary of analytical results Tables 42, Section 7.21; 46, Section 7.22; 48, Section 7.31; 51, Section 7.32; 53, Section 7.4; and 54, Section 7.4, list the specific C values for the different coating operations at the various plants studied during the Phase II contract period. Table 60, Section 7.4, lists the combined C value ranges for each coating studied, and Table 59 further combines the ranges in Table 60 for general coating categories. Collectively, the C values ranged from 0.01 to 0.89 for all coatings studied. Because of the limited number of emission samples from the different variety of coatings and ovens, no conclusive statements can be made regarding definite C value trends for specific process variables or combinations of process variables.

D. A plot of the change of observed organic emission (E_{obs}) with calculated organic emission (E_{calc}) from new and old ovens sampled during this Phase II study, as shown in Figure 33 and 34 (Appendix B), indicated that the relative age of an oven may affect the observed to calculated emission ratio (C value) or slopes of the plotted curves in Figure 33 and Figure 34, (Appendix B).

A least squares linear equation was determined for the data points representing the emission from both newer and older ovens with the the following results:

1. Newer ovens
   Y-intercept = -6.63 ± 5.76
   slope (E_{obs}/E_{calc}) = 0.481 ± 0.093

2. Older ovens
   Y-intercept = -2.23 ± 10.9
   slope (E_{obs}/E_{calc}) = 0.560 ± 0.072

The observed emission rate values (E_{obs}) were derived from average recorded values for specifically calculated organic emission rates (E_{calc}) as shown in Tables 42, 46, 48, 51, 53, and 54. Figure 33 represents older ovens, and Figure 34 represents the newer ones. A higher slope value indicated higher sampled or observed organic emission values for various calculated organic emission values. One possible explanation for this occurrence is that a certain portion of the volatilized organics from the coated metallic sheets are incinerated in the oven. The efficiency of this incineration process could be greater in newer ovens.

E. It should be noted that another source of difference between E_{obs} and E_{calc} is the fact that decorated metal sheets leaving the oven, although assumed to be essentially 100 percent dry, have been found, through independent investigations of particular coating operations, to hold 7 to 10 percent solvent after 300°F baking (95).

F. Further studies are definitely needed to determine the actual extent that an oven's operational, structural and mechanical characteristics can affect the level of pollution ultimately emitted from the oven. These studies could compare the variation of emitted pollutants versus various oven burner's flame control settings, degree and mode that an oven's air is recirculated through the oven before actually being exhausted to an exit stack, or the extent of vapor incineration that is occurring in the oven itself as possibly indicated by the amount the oven dilution air is recirculated through the oven burners and determined by the possible variation of the level of CO_2 exhausted from the oven and sampled from the exit stack with various oven flame levels, oven air recirculation levels,or other variations of an oven's operational, structural or mechanical characteristics. With regard to this last suggested observation and oven incineration determination via observation of emitted CO_2 levels, the oven burner contribution to emitted CO_2 would have to be calculated utilizing the methods of combustion engineering.

G. Table 58 is a summary table of organics conversion efficiencies of incineration for air pollution control equipment sampled in this metal decorating Phase II study. For catalytic incineration, the percentages of organics conversion efficiencies ranged from 52.79 percent to 99.70 percent and averaged 90 percent. For thermal incineration, the values of the percentages of organics conversion efficiencies were within a range of 79.44 to 99.98 percent and averaged 97 percent.

From previously described curves depicting the change of organics sampled at the outlet of control equipment with change of incineration temperature (see Figures 30 and 31, Section 7.31, and Figure 32, Section 7.32), it became apparent that the organics conversion efficiency of thermal and catalytic incineration increased with increased incineration temperatures. Thermal incineration could be brough very close to a 100 percent cleanup of the inlet organics pollution if temperatures were increased to around 1400°F. However, it became obvious that incineration temperatures used and subsequent quantity of heat used in the incineration process should depend on the degree of organics conversion efficiency or cleanup desired and the overall combustion efficiency of the incinerator at the temperature chosen. For example, in Figure 30, Section 7.31 (thermal incineration of vinyl phenolic lacquer, 4-MD) a 90 percent organics conversion incineration efficiency (or pollution cleanup) could be obtained around 970°F incineration temperature, 95 percent organics conversion incineration efficiency could be obtained around 1040°F, and a 99 percent organics conversion incineration efficiency could be obtained around 1160°F.

In Figure 31, Section 7.31 (thermal incineration of white vinyl coating, 4-MD) a situation arose where although the emitted organics decreased with increased incineration temperature, the organics conversion incineration efficiency remained around 99 percent. Nine hundred degrees (F) or 1400°F produced the same high conversion incineration efficiency. For this specific coating operation at this specific plant, temperatures lower than 900°F could be used to produce lower conversion efficiency values if the higher efficiency values were not necessary.

In Figure 32, Section 7.32 (Catalytic Incineration of High Solids Vinyl, 5-MD) the change of outlet organic emissions with change in incineration temperatures seemed to level off around a 154 ppm outlet emission level, corresponding to an organics conversion incineration efficiency of 92 percent between 900 to 1000°F. However, 750°F could be used if only a 90 percent organic emission cleanup was specified as necessary.

H. In regards to this aspect of organics conversion efficiency, an important co-determinant in choosing incineration temperature for organic pollution cleanup, as previously mentioned, is the fact that an incinerator operating inefficiently because of faulty maintenance or improper temperature setting can exhaust partially oxidized air pollutants (e.g. CO, NO_x) that could have a worse environmental affect than exhausted organics. For all the thermal incinerators studied, the average percentages of the CO outlet values to the average inlet organic loading values (an indication of the overall combustion efficiency of the incinerator) expressed as ppm CO_2 were 10 percent (4-MD), 25 percent (4-MD) at 900°F; 0 percent (4-MD), 20 percent (4-MD) at 1000°F; 15 percent [7-MD (BC)] at 1100°F; 0 percent (4-MD), 1.5 percent (4-MD) at 1200°F; 2 percent [7-MD (BC)] at 1300°F; 0 percent (4-MD), 0 percent (4-MD), at 1400°F; and 25 percent [7-MD (BC)] at 1480°F. For all catalytic incineration units studied, the ratio percentage for CO outlet values to organics inlet values were about 15 percent at temperatures of 600, 700, 800, 850, 900, 950 and 1000°F for results from plant 5-MD, and were 0.5 percent at 700°F and 1.5 percent at 800°F for results from Plant 6-MD (BC). The ratio values indicated a variety of incineration efficiencies for the two types of incinerators studied. Generally, a temperature could be reached with the thermal incinerators (around 1200°F and above) when exhausted CO is at a zero to trace level. However, 7-MD (BC) is an exception, and obviously has incinerator inefficiency problems indicated by the levels of outlet CO exhausted and the high outlet exhaust methane (CH_4) levels when compared to inlet CH_4 levels for the various incinerator temperatures studied (see summary Table 54, Section 7.4). Most of the other plants' thermal incinerator outlet exhaust CH_4 levels were lower than the inlet levels, and decreased with increased incineration temperatures. For the 7-MD (BC) incinerator, the outlet exhaust methane level was higher than the inlet level, and remained higher than the inlet level even though the value did decrease with incineration temperature. The older catalytic control unit studied had a fairly constant output of CO over a range of set incinerator temperatures revealing a steady level of inefficiency for its incineration combustion process. However, the newer catalytic unit [6-MD (BC)] had a low level of exhaust CO at temperatures samples were taken (700°F and 800°F), demonstrating good combustion incineration efficiency.

I. In reporting trap analyses in this study, an arbitrary distinction was made between "low boilers" and "high boilers" (see Section 4.27, C). The "low boilers" consisted of the total organic concentration reported when the temperature of the trap in analysis was allowed to rise to room temperature (0°C in earlier work).

The "high boilers" consisted of the total organic concentration reported when the trap was heated from room (ambient) temperature to approximately 250°C.

Representative organic solvents indigenous to metal decorating include solvents that are primarily of the mineral spirits type (Naphtha or Stoddard Solvent), xylol (xylene), toluol (toluene) or higher homologs, ketones [such as isophorone, methyl ethyl ketone (MEK), methyl isobutyl ketone (MIBK), or di-isobutyl ketone], n-butanol, some propanol, various acetates (esters) including Cellosolve acetate, dimethyl formamide, and various others excluding chlorinated solvents or nitro-paraffins. In typical web offset operations the solvents being used as ink thinners and diluents are primarily alphatic hydrocarbons and glycols and, to a lesser extent, aromatic hydrocarbons, alcohols, esters, ketones and glycol ethers. Generally speaking, the solvents used in metal decorating ink formulations have significantly lower average boiling point ranges than web offset heatset ink solvents.

Table 57 lists total organic emission values and corresponding low boiling fractions for all metal decorating coatings sampled, individual coatings being grouped according to the approximate temperature of the sampled emission (i.e. outlet samples from pollution control units were segregated from oven stack samples). The average "low boilers" percentage of the combined total of organic emission sampled from various ovens for metal decorating operations is 92 percent. For all the organic emission sampled from control equipment outlets, the "low boilers" represented 81 percent, or more specifically, 75 percent for thermal incineration and 87 percent for catalytic incineration.

It should be noted that if the percentage of "low boilers" before incineration is greater than the percentage of "low boilers" after incineration, the possibility existed that the percentage of "low boilers" incinerated is greater than the percentage of "high boilers" incinerated, or the percentage of "low boilers" and "high boilers" incinerated is the same, and "high boilers" were formed in the incineration process. The opposite conclusions could be noted if the percentage of "low boilers" before incineration was less than the percentage of "low boilers" after incineration (i.e., the percentage of "high boilers" incinerated is greater than the percentage of "low boilers" incinerated, or the percentage of "low boilers" and "high boilers" incinerated are the same, and "low boilers" were formed in the incineration process). Of course, factors or a combination of factors affecting the percentage of "low boilers" incinerated or the formation of compounds could be reactivity, temperature, residence time at certain temperatures, concentration,

distribution, design and condition of the combustion chamber of incinerator. The percentage of "low boilers" from metal decorating ovens is much greater than "low boiler" percentages from web offset dryers (see Table 39, Section 6.4). The average sampled metal decorating oven "low boilers" percentage is higher than the average "low boiler" percentage after incineration occurred. Again, because of the limited number of samples taken and general nature of the "low boiling" — "high boiling" separation, no further definite conclusions or generalizations can be made at this time.

J. In the earlier sampling of the web offset lithographic process emissions under Task 3 of this Phase II contract work, it became readily apparent that the process was a batch process where individual jobs were of a semi-continuous nature. A web of paper for a particular job passing through a varied number of inking units, and, in turn, being subjected to one of two drying mechanisms constituted, for sampling purposes, a continuous steady-state type operation,(assuming no press mechanical failures). Certain equations were developed relating known job process parameters to the extent and level of the emission. Generally, duplicate samples obtained at a sampling point where uniform flow and good mixing prevailed, provided a reasonable assurance that the sample obtained would be representative of the job under evaluation.

Contrasting this earlier work with the evaluation of the metal decorating operations, it was found metallic sheets are fed by press equipment for application of various materials (referred to as coatings) by coaters through long tubular type dryers. The operation is not web type (continuous) but rather sheet-fed. Generally, a skid of material (usually on the order of 1120 sheets) is fed into the dryer by a series of wickets. There exists, as in any sheet-fed operation, a need for reloading. A new skid of material must be replaced after the completion of the previous skid, and sufficient time must also be allowed for stacking the completely dried metallic sheets at the discharge end of the dryer.

This constitutes from a sampling point of view, a non-continuous or unsteady type process for a particular job, since there exists periods between skid changes when sheets are not being introduced into the oven. In the controlled experiment previously discussed (Section 7.21), it was shown that sampling must be conducted at specific periods of time during the process operation, and it appears that several grab samples taken at various time intervals during a process operation will be required in order to provide a reasonable assurance that the levels of organic emissions sampled are truly representative of the process under evaluation over extended periods of time. There is the possibility that one

large volume of sample could be taken over an extended time period so that the bias that would exist from grab sampling at periods of high or low organic emission levels could be eliminated. However, additional errors could be introduced into sample results when the large volume of sample collected is subjected to the limitations of instrumental analysis and to additional errors caused by the analyst himself due to increased sample handled.

K. It should finally be noted that background oven samples should always be included in a job-process operation evaluation because of the strong possibility that various background organic pollution levels are present in the oven.

8.0 TESTING OF BEST CONTROLLED INSTALLATIONS

8.1 Introduction

Contained in the federal Clean Air Amendments of 1970 is a provision for establishing standards of performance for new stationary sources for a group of 30 to 35 industries which includes the graphic arts. Inherent in the regulations for state plans to implement the accomplishment of ambient standards as set forth by the above legislation, is the requirement that new industrial plants achieve a standard of emission performance based on the latest available control technology, processes, operating methods and other alternatives. These performance standards would reflect the degree of emission limitation achievable through the application of the best system of emission reduction taking into account the cost of achieving such a reduction.

Since standards of performance for new stationary sources may be required for new sources in the graphic arts industry, logically acquiring the data necessary to develop these standards was included in the current contract activity and may be used in the ultimate development of standards. Task 5 entitled "Source Testing of Best Controlled Processes" was one of the modifications added to the original contract. For a complete description of the contract work conducted under Task 5 refer to the Introduction (p. 8) to this report.

8.2 Objectives

Work conducted under Task 5 had as its primary goal to provide data so as to reflect a degree of emission limitation achievable through the application of the best system of emission reduction taking into consideration the cost of such control equipment for both the web offset lithographic process utilizing heatset inks and the metal decorating process which employs coatings.

Although primarily aimed at developing data on air pollution control technology already in use by the industry, thermal and catalytic incineration, this contract work did not overlook the changes being investigated in raw materials as well as process modification with new drying systems occurring within the graphic arts industry. These new concepts contain potential solutions to the environmental problems being faced by the industry, and current awareness, a fundamental element of the program (Sections 1 to 3), indicated that it would be timely to include these approaches in Task 1 of the contract effort. An assumption was made at the outset of Task 5 work that these new process variations, whether inks or drying systems, would not be available for testing within the specified contract period.

8.3 Background for Conduct of Tests

Sections 6 and 7 report studies conducted of thermal and catalytic incineration equipment for the web offset lithographic process and metal decorating process. Sources were chosen by random selection, and at least one thermal and one catalytic incineration installation was examined for each process.

In order to further characterize the effectiveness of incineration equipment in both the web offset and metal decorating operations, four additional sources, chosen as the most recent control installations were studied. These are presented as follows in Table 61.

TABLE 61
Sources Evaluated and Locations in Text

Type of Source	Code No.*	Locations in Text
Web offset process with thermal incineration	8-WO (BC)	Appendix D and Section 6.4
Web offset process with catalytic incineration	9-WO (BC)	Appendix D and Section 6.4
Metal decorating process with catalytic incineration	6-MD (BC)	Appendix E and Section 7.4
Metal decorating process with thermal incineration	7-MD (BC)	Appendix E and Section 7.4

*Refer to description in data treatment section of report. (BC) accompanying code number indicates a best controlled process.

This additional field sampling and analysis added two months project time to the contract and was conducted late in the program. Because of time limitations, these controlled sources were not evaluated as extensively as those conducted under Tasks 3 and 4 (Sections 6 and 7).

An extensive preliminary effort at contacting and screening plants was conducted and four plants selected as a result. Several factors were considered in the choice of these plants. Primary emphasis was placed on the age of the control equipment and attention to maintenance by the plant. In all four plants chosen, the control equipment was between six months and one year old. A secondary

consideration was geographic location since restrictions in transporting testing equipment limited the testing crew to vehicular travel. Thus, all plants utilized in this section of the program were within reasonable driving distance of the Foundation.

A minimum amount of process operational data was recorded at each plant with primary emphasis being accorded the control equipment, its capital, installation and operational costs as well as general operational data of the unit. Within limitations placed by the number of samples taken (at each plant eight samples were collected) at least one process variable was sampled. In all cases, samples were collected in duplicate at both the inlet and outlet of the control equipment. As a minimum, at least two incineration operational temperatures were evaluated for hydrocarbon conversion efficiency. The sampling and analytical procedure employed was the same as that presented in Section 4.0.

Having considered the background for this particular section of the program, the basic objectives of the testing and the manner in which the tests were performed, a review of the results of each of the four plants tested will be presented.

8.4 Test Results

8.41 Web Offset With Thermal Incineration [8-WO (BC) Appendix D]

All data collected at this plant had Code No. 8-WO (BC) assigned. Press operational conditions at the time of sampling were recorded. Press speed, ink coverage, type of paper stock were obtained for the process line studied. In addition, information was obtained on the percent solvent (by weight) for the ink utilized during the test. Temperature and pressure readings were taken in the field at the time of sampling and actual as well as corrected gas flow rates were recorded. The results of the tests are presented in Data Sheets Nos. 1 through 5 which appear in the appropriate section of Appendix D.

Eight samples (Nos. 18, 19, 21 through 26 consecutively) were taken on a web offset press with a combination direct flame hot air (d.f.h.a.) dryer and controlled by a TEC "Turbo-Mix" prototype thermal afterburner. Two duplicate sample sets (a set being two samples) were taken of the inlet to the air pollution control unit for purposes of establishing the emission level of the process prior to entry into the control unit. Two duplicate sample sets were taken at the outlet of the control equipment at two different incineration operational temperatures, 1100°F and 1300°F. In all cases, duplicate inlet and outlet samples were collected simultaneously (refer to Data Sheet #3-ECD, Appendix D). A temperature check of the incineration temperatures

was conducted by testing personnel with only a 30° difference from that temperature as recorded by plant monitors. Thus, the incineration temperature as reported by the plant was accepted as being representative. Utilizing the organic and CO_2 content values in the effluent gas stream taken at each corresponding incineration temperature, Table 62 was developed.

TABLE 62

Organic and CO_2 Values Versus Incineration Temperatures

Incineration Temperature Outlet (°F)	Organic Inlet[a] (ppm)	Organic Outlet[b] (ppm)	CO_2 Outlet (ppm)	Efficiency[c] (%)
1100	2153	21 & 117	34435	99.02 & 94.57
1300	2153	29 & 36	42390	98.65 & 98.34

a. Average value of two samples (Nos. 18 and 19).
b. Individual sample results as taken from lab analysis report.
c. For calculation of efficiency, each individual outlet sample was utilized and the corresponding efficiency so noted. The equation utilized in the efficiency calculation can be found on Data Sheet No. 3-ECD-D.

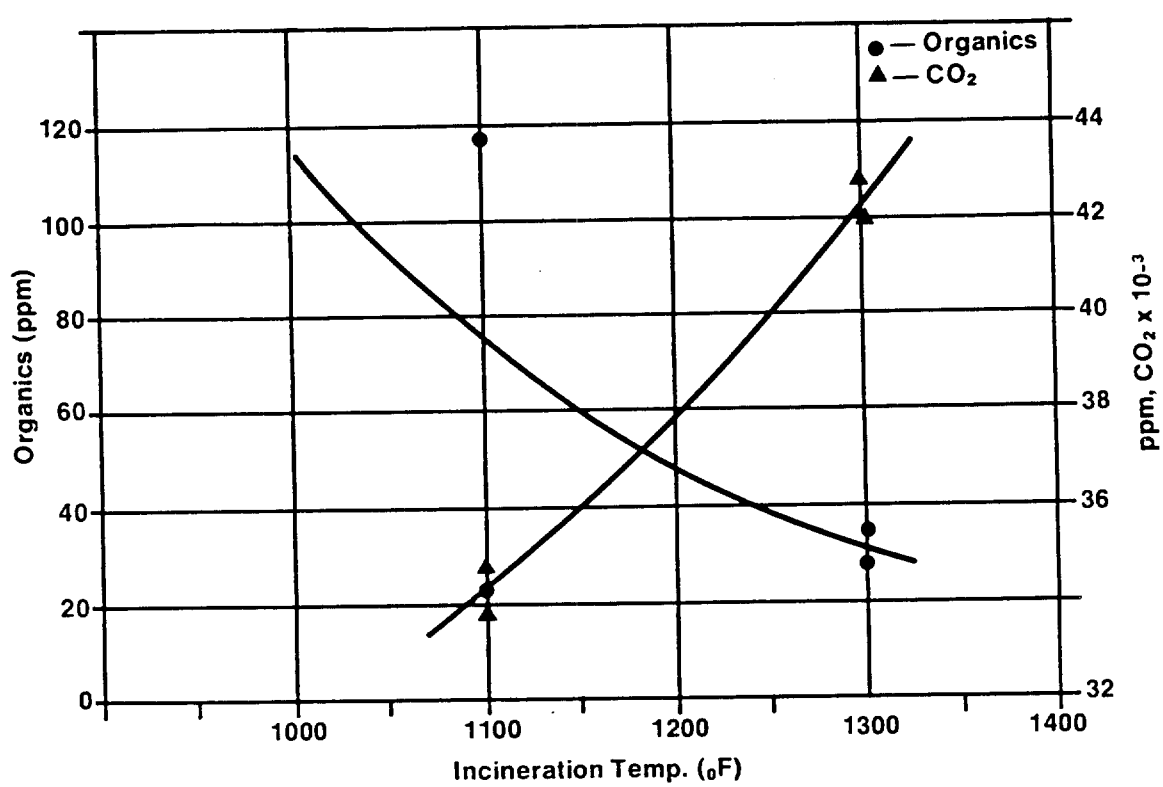

Figure 35 — **Web Offset Emissions: Organics, CO_2 (Thermal Incinerator — d.f.h.a. Dryer) A Best Controlled Source**

Utilizing the data as presented in Table 63, Figure 36 was constructed, representing a plot of the organic and CO_2 emission values (at incinerator outlet) versus the incineration temperature of the control unit for the process evaluated. An increase in incineration temperature is accompanied by a decrease in organic values with a corresponding increase in the level of CO_2. At an operational incineration temperature of 750°F-800°F, a 95 percent organic conversion efficiency was noted.

TABLE 63
Organic and CO_2 Values Versus Incineration Temperatures

Incineration Temperature Outlet (°F)	Organic Inlet[a] (ppm)	Organic Outlet[b] (ppm)	CO_2 Outlet (ppm)	Efficiency[c] (%)
750	2552	261 & 455	18314	89.80 & 82.17
800	2552	95 & 116	21085	96.28 & 95.45

a. Average value of all duplicate inlet samples.
b. Individual sample result taken from lab analysis report.
c. For calculation of efficiency, each individual outlet sample was utilized and the corresponding efficiency so noted. The equation utilized in the efficiency calculation can be found on Data Sheet #3-ECD-D.

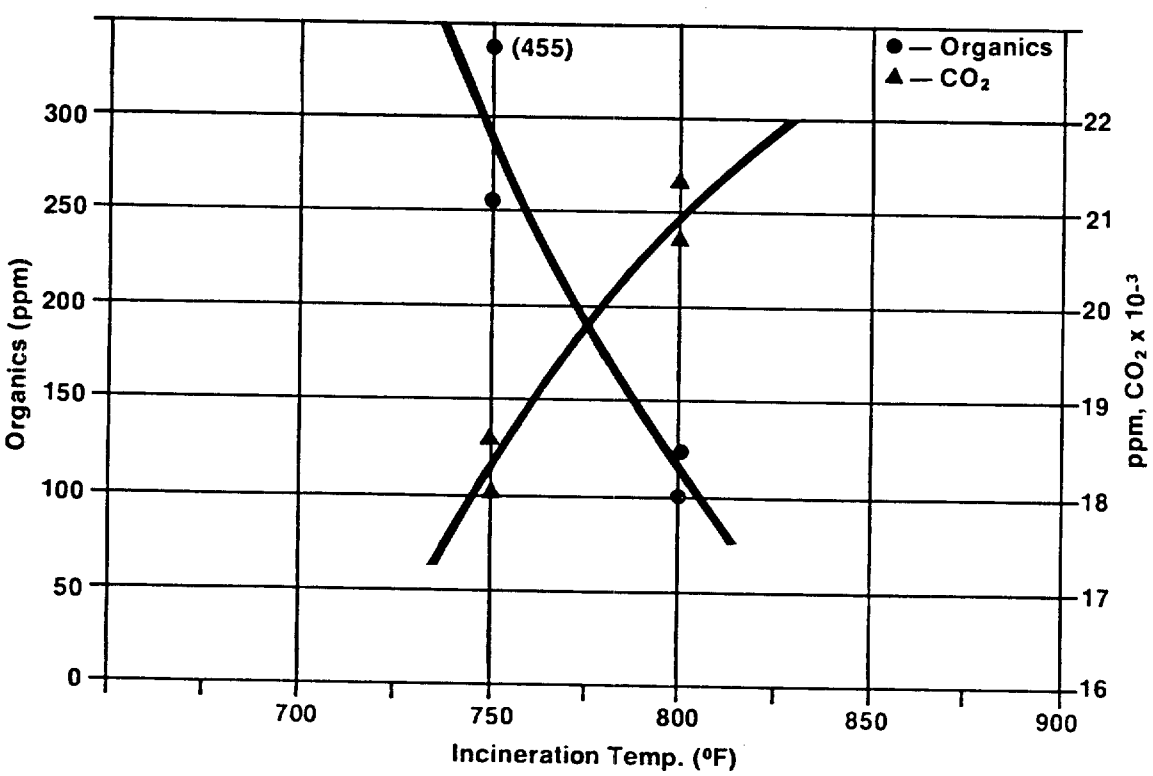

Figure 36 — **Web Offset Emissions: Organics, CO_2 (Catalytic Incinerator — h.v.h.a. Dryer) A Best Controlled Source**

Utilizing the data as presented in Table 62, Figure 35 was constructed, representing a plot of the organic and CO_2 emission values (at incinerator outlet) versus the incineration temperature of the control unit for the process evaluated. An increase in incineration temperature is accompanied by a decrease in organic values with a corresponding increase in the level of CO_2. At an operational incineration temperature of between 1100°F and 1200°F, a 95 percent organic conversion efficiency was noted. The physical arrangement of the sampling location precluded sampling of NO_x type emissions.

Data Sheet #3-ECD-C gives a comparison of the calculated and observed emission rates for samples taken from this printing line which employed a direct flame hot air dryer. In this case, the "C" factor (E_{obs}/E_{calc}) of 0.35 compares very favorably with the range of 0.36 to 0.45 reported in previous studies (Section 6.21). For a complete description of the "C" factor see Section 5.63. These data tend to substantiate further that a direct flame hot air dryer serves to some degree as an incinerator of organic solvent.

8.42 Web Offset With Catalytic Incineration [9-WO (BC) Appendix D]

All data collected at this plant had Code No. 9-WO (BC) assigned. Press operational conditions at the time of sampling were recorded. Press speed, ink coverage, type of paper stock were obtained for the process line evaluated. In addition, information was obtained on the percent solvent (by weight) for the ink utilized during the test. Temperature and pressure readings were taken in the field at the time of sampling and actual as well as corrected gas flow rates were recorded. The results of the tests are presented in Data Sheets Nos. 1 through 5 which appear in the appropriate section of Appendix D.

Eight samples (Nos. 27 through 31, 33, 34 and 38) were taken on a web offset press with a high velocity hot air dryer (h.v.h.a.), and controlled by a TEC Systems combined thermal and catalytic unit (catalytic unit in use during test). Two duplicate sample sets (a set being two samples) were taken of the inlet to the unit to establish the emission level prior to entry. Two duplicate sample sets were also taken at the outlet of the control equipment at two operational temperatures, 750°F and 800°F. A temperature check was made by testing personnel with a 20° to 30° difference being noted in readings. Thus, the incineration temperature was accepted as that being recorded by plant monitoring equipment. Utilizing the organic analysis obtained with each corresponding incineration temperature, Table 63 was developed as follows.

Data Sheet #3-ECD-C gives a comparison of the calculated and observed emission rates for samples taken from this printing line which employed a high velocity hot air dryer. In this case, the "C" factor (E_{obs}/E_{calc}) of 0.50 compares very favorably with the range of 0.50 to 0.70 reported in previous studies (Section 6.22). These data tend to further substantiate the fact that a dryer regardless of type serves to some degree as an incinerator of organic solvent.

8.43 Metal Decorating With Catalytic Incineration [6-MD (BC) Appendix E]

All data collected at this plant had Code No. 6-MD (BC) assigned. Coating operational conditions at the time of sampling were recorded. Sheet size, milligram weight of coating, and coater speed were obtained for the process line studied. In addition, information was obtained on the percent solvent (by weight) for the coating utilized during the tests. Temperature and pressure readings were taken in the field at the time of sampling and actual as well as corrected gas flow rates were recorded. The results of the tests are presented in Data Sheets Nos. 1 through 5, which appear in the appropriate section of Appendix E.

Eight samples (Nos. 1 through 6, 8 and 9) were taken of the application of a white acrylic coating to a metal sheet with control of emissions by a catalytic incinerator. Two duplicate sample sets (a set being two samples) were taken of the inlet to the control unit to determine the emission level of the process prior to entry into the control unit. A considerable spread in the range of organics as analyzed (from 5164 to 16534 ppm) results from samples taken at the inlet to the control equipment. Much of this deviation is the direct result of a relatively short duct length leading to the control equipment, resulting in a non-representative and non-uniform sampling site. There existed no alternative sampling location other than the one actually sampled. For purposes of the efficiency determination of the control unit, all four inlet samples were averaged. Two duplicate sample sets were taken at the outlet of the control equipment at two separate operational temperatures, 700°F and 800°F.

A temperature check was made by testing personnel with no significant difference being noted in readings. Thus, the incineration temperature as recorded by the plant monitoring equipment was acceptable. Utilizing the organic readings obtained with each corresponding incineration temperature, Table 64 was developed.

TABLE 64
Organic and CO_2 Values Versus Incineration Temperature

Incineration Temperature Outlet (°F)	Organic Inlet[a] (ppm)	Organic Outlet[b] (ppm)	CO_2 Outlet (ppm)	Efficiency[c] (%)
700	10093	30 & 44	17223	99.70 & 99.56
800	10093	43 & 180	27967	99.56 & 98.22

a. Average value of all duplicate inlet samples.
b. Individual sample result as taken from lab analysis report.
c. For calculation of efficiency, each individual outlet sample was utilized and the corresponding efficiency so noted. The equation utilized in the efficiency calculation can be found on Data Sheet No. 3-ECD-C.

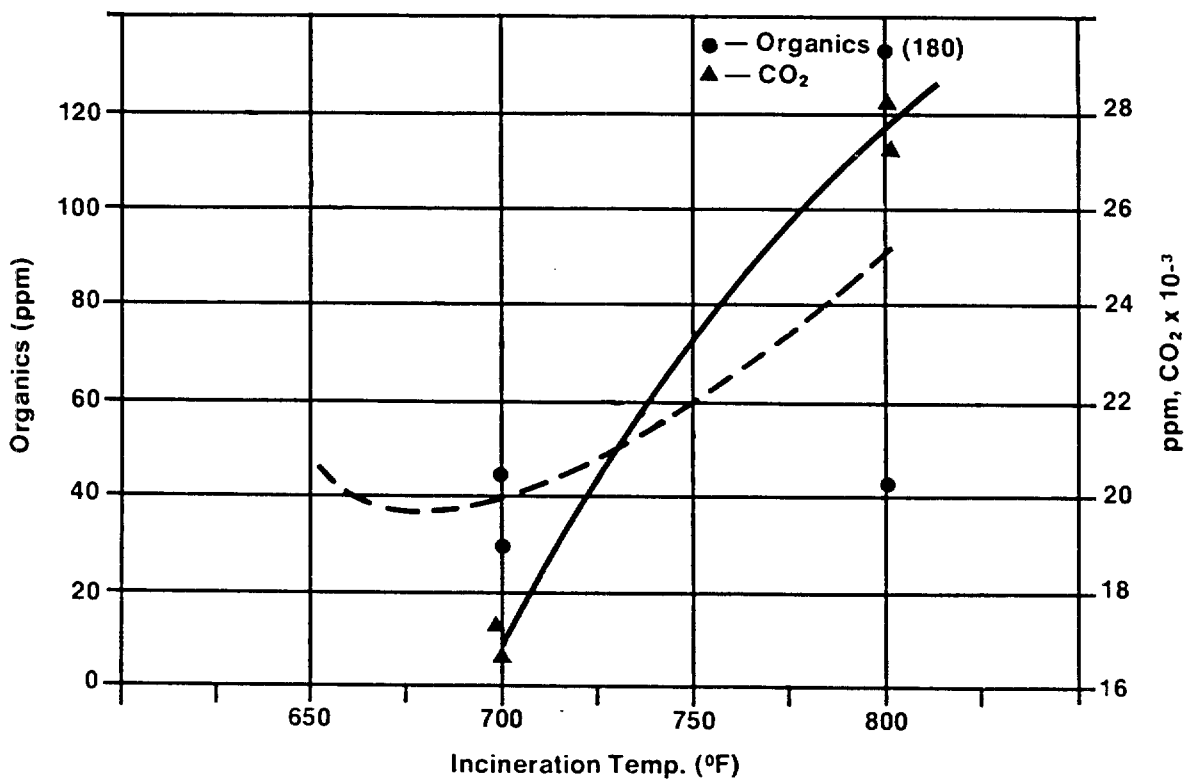

Figure 37 — **Metal Decorating Emissions: Organics, CO_2 (Acrylic White Coating — Catalytic Incinerator) A Best Controlled Source**

Utilizing the data as presented in Table 64, Figure 37 was constructed, representing a plot of the organic and CO_2 emission values (taken at incinerator outlet) versus the incineration temperature of the control unit for the process evaluated. An increase in incineration temperature is not accompanied by the usual decrease in organic values although with increased incineration temperature an increase in the level of CO_2 is noted. The range of all four outlet data points, however, is within the range of the sampling method accuracy. As illustrated in Table 64, the organic conversion efficiency exceeded 98 percent when high inlet concentration entered the incinerator. The data point indicating 180 ppm at an incineration temperature of 800°F must be an outlier and if this is the case, then the efficiency of the incinerator remains fairly constant between 700 and 800°F.

A comparison between observed and calculated emission rates is presented on Data Sheet #3-ECD-E. (Plant data necessary for performing the calculation of the various emission rates are shown on Data Sheet #3-ECD-D.) Calculated values were determined using the appropriate equation(s) as shown in Section 5.0.

8.44 Metal Decorating With Thermal Incineration [7-MD (BC) Appendix E]

All data collected at this plant had Code No. 7-MD (BC) assigned. Coating operational conditions at the time of sampling were recorded. Sheet size, milligram weight of coating and coater speed were obtained for the process line studied. In addition, information was obtained on the percent solvent (by weight) for the coating utilized during the tests. Temperature and pressure readings were taken in the field at the time of sampling and actual as well as corrected gas flow rates were recorded.

The results of the tests are presented in Data Sheets Nos. 1 through 5, which appear in the appropriate section of Appendix E.

Eight samples (Nos. 10 through 17) were taken of the application of an oleoresinous enamel coating to a metal sheet controlled by a thermal incinerator. A duplicate set (a set being two samples) was taken of the inlet to the air pollution control unit for purposes of establishing the emission level of the process prior to entry into the control unit. Three duplicate sample sets were taken at the outlet of the control equipment at three separate operational temperatures. One set was taken at an incineration temperature of 1100°F and another at 1300°F and the final set at 1480°F (the maximum attainable temperature of the unit). Temperature, as monitored by testing personnel varied only 10° from temperatures recorded by the plant. Utilizing the organic loadings obtained with each corresponding incineration temperature, Table 65 was developed.

TABLE 65

Organic and CO_2 Values Versus Incineration Temperatures

Incineration Temperature Outlet (°F)	Organic Inlet[a] (ppm)	Organic Outlet[b] (ppm)	CO_2 Outlet (ppm)	Efficiency[c] (%)
1100	3184	102 & 188	29358	96.80 & 94.10
1300	3184	25 & 35	36895	99.20 & 98.90
1480	3184	20 & 46	38338	99.38 & 98.56

a. Average value of all duplicate inlet samples.
b. Individual sample result as taken from lab analysis report.
c. For calculation of efficiency, each individual outlet sample was utilized and the corresponding efficiency so noted. The equation utilized in the efficiency calculation can be found on Data Sheet #3-ECD-C.

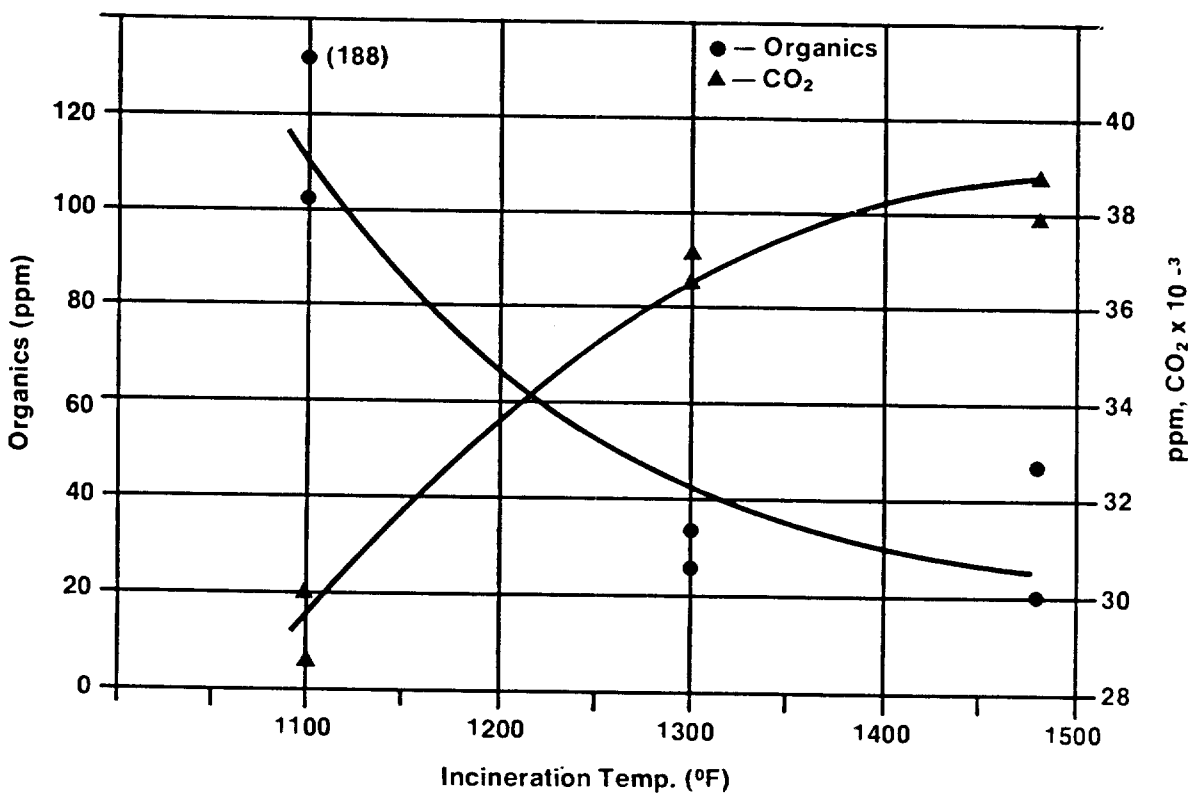

Figure 38 — Metal Decorating Emissions: Organics, CO_2 (Oleoresinous Enamel Coating — Thermal Incinerator) A Best Controlled Source

Utilizing the data as presented in Table 65, Figure 38 was constructed, representing a plot of the organic and CO_2 emission values (taken at incinerator outlet) versus the incineration temperature of the control unit for the process evaluated. An increase in incineration temperature is accompanied by a decrease in organic values with a corresponding increase in the level of CO_2. At an operational incineration temperature between 1100°F to 1200°F, a 95 percent organic conversion efficiency was noted.

A comparison between observed and calculated emission rates is presented on Data Sheet #3-ECD-E. (Plant data necessary for performing the calculation of the various emission rates are shown on Data Sheet #3-ECD-D.) Calculated values were obtained using the appropriate equation(s) as shown in Section 5.0.

8.5 Discussion of Test Results

The primary goal of this segment of the program was to collect data to determine the degree of cleanup achievable through the application of the best system(s) of emission reduction and to compare this effectiveness to the cost of such control equipment. Results of the previously discussed field tests (Section 8.4) have provided an initial insight into the degree of emission control achievable.

Shown in Table 66, is a consolidation of much of the data pertinent to relating the cost of such equipment to its effectiveness. Based on the analytical results of the samples taken, the sources tested can be considered as "best controlled processes." For a further discussion as to why and how these plants were chosen, the reader should refer back to Section 8.3.

There remain, however, many variables that cannot be fully presented within the limits of the tabular form. For instance, the amount of effluent treated (generally expressed in standard cubic feet per minute) will have a bearing on the capital cost of the equipment. Whether heat recycle is utilized or not will certainly affect the operational costs of the unit. None of the units tested, however, utilized heat recovery, thus, precluding this variable as input to these data. Installation costs of units vary widely depending upon the degree of structural support required, primarily the layout of the building (height, age, etc.). Operational costs will vary widely depending on size of the control unit and the actual temperatures at which incineration is carried out.

It becomes readily apparent from a review of the test results that an organic conversion efficiency of 95 percent is achievable from the units sampled at an incineration temperature of 1100°F to 1200°F

TABLE 66

Cost Versus Effectiveness for Units Evaluated as Part of Task 5

Plant Code No.	Process	Incinerator Operational Temperature[a] (°F)	Corresponding Efficiency[b] (%)	Rated scfm of Unit	Cost of Equipment Capital[c] ($)	Installation[d] ($)	Operational[e] ($)
8-WO(BC)	Web offset/thermal incineration	1100	96	2500	12000	2500	6870
9-WO(BC)	Web offset/catalytic incineration	800	95	4000	23000	4000	7200
7-MD(BC)	Metal decorating/ thermal incineration	1100	95	6000	24000	4550	8500
6-MD(BC)	Metal decorating/ catalytic incineration	700	99	9000	28000	4000	7200

a. Based on an evaluation of data collected from field tests as sampled.
b. Reflects percentage efficiency at stated temperature.
c. Cost as obtained from plant management (dependent on capacity of unit).
d. Includes as a minimum, structural support, electrical and gas piping, necessary ductwork and labor. Costs as obtained from estimates made by plant management.
e. Based on a 5-day, 2-shift work week (yearly amount). Reflects operational temperature shown in preceding column. Costs as obtained from estimates received from plant management.

for thermal, and 750°F to 850°F for catalytic. Realistically the standards of performance, if established, should reflect an operational temperature range for a given piece of control equipment in addition to the percent organic conversion achievable. Data developed from these field studies could serve very well as that basis. Of note is the fact that in all four plants sampled, the operational cost of the unit (gas consumption) was based upon the operational temperature as shown in Table 66. There remains, therefore, no means by which to evaluate operational costs versus degree of emission reduction (effectiveness) for incineration temperatures other than the incineration temperature as found on Table 66. One should also note that the cost information provided in this segment of the program by various plant managements can be considered as "best available estimates." In no cases were plant management personnel able to provide exact cost figures relating to the capital, installation and operational costs of the control equipment as evaluated.

For example, no plant sampled meters natural gas to the control equipment separately. Therefore, such cost data become merely one part of the total fuel operational cost of the plant. In one particular plant, the catalytic unit had undergone maintenance by several contractors and no reportable cost data for such maintenance was made available to testing personnel.

8.6 Cost Versus Effectiveness

While it has been clearly demonstrated that a high level of hydrocarbon cleanup is achievable (95 percent or greater) with the control units evaluated in this program, a comparison of cost versus effectiveness between the various catalytic and thermal incineration units as evaluated is not as easily demonstrable. As noted in Table 66, the rated scfm of the control unit will affect the capital cost of the equipment somewhat. Installation costs of these units did not vary greatly for in most cases the physical layouts of the plants were similar (one-story buildings, in general). Operational costs of the four units evaluated were amazingly similar despite the dissimilarity of the control units. Thus, any direct relationship of the cost of operation and the efficiency at various incineration temperatures or comparison of catalytic versus thermal is limited due to the small number of units (four) evaluated in this program.

There are in the literature, however, several specific references to comparative costs of control equipment.

Mueller (96) compares in detail the cost of thermal control equipment versus the fuel cost for such and further describes this system, inclusive of heat recovery (thermal regenerative system). The author, however, has chosen as his basis for calculation a 16,000 scfm control unit which generally does not apply for the graphic arts industry. Rarely does the exhaust of a dryer or oven from the web offset and metal decorating process approach the above mentioned flow rate.

Turk, et al (97) present in detail the various control devices as well as systems in use for odor control. Catalyzed air oxidation equipment costs, expressed as system cost (capital plus 1000 operating hours), has been plotted against varying gas rates (expressed in scfm).

Povey (98) discusses in detail catalytic incineration systems applicable to metal decorating and compares them with various other incinerating systems.

Yocum, et al (99) present a comprehensive discussion relating comparative costs for catalytic and flame afterburners to include itemized costs as well as extent of waste heat recovered. A table is presented in which a comparison is made of the total costs for installing and operating both catalytic and direct flame afterburners, assuming different heating values for the incoming gas stream along with different levels of heat recovery.

Thomaides (100) presents a detailed cost comparison of thermal and catalytic incinerators assuming a process gas volume of 6000 scfm which is realistic for metal decorating. An interesting feature of this article is a table which provides a comparison of temperatures required to convert combustibles to carbon dioxide and water.

Skinner, et al (101) describe the application of incineration to the emissions discharged from the "web" dryers. A complete cost breakdown of incineration equipment is included along with its operational expense.

In reviewing the above mentioned references, ranges of operating temperatures for the two methods of incineration complete with costs are possible. Table 67 represents a brief synopsis of these data.

TABLE 67
Ranges of Values for Incinerating Waste Gases

Type of Incineration	Operating Temperature (°F)	Equipment Cost ($/scfm)	Annual Gas Cost ($/1000 scfm)
Thermal	1000-1500	1.75-10.0	2.0-7.50
Catalytic	600-900	1.75-7.50	2.0-4.50

Engineering economics, primarily air pollution control economics are extremely complex and dependent upon several variables. The amount and type of pollution present, the difficulties involved in controlling the specific pollutants and the level of control dictated by local air quality requirements (EPA guidelines to states on hydrocarbon emission called for a 90 percent reduction) will affect the total cost of a particular industrial air pollution control system.

There is general agreement that the reportable average breakdown of operating expenses for pollution control equipment is as follows:

Power, fuel and water	43%
Materials and parts	11%
Maintenance labor	15%
Disposal of collected wastes	31%
Total	100%

Overall, annual operating costs are said to run about a third of the system's capital cost. This appeared to be the case for several of the systems evaluated in this program. In addition to these direct out-of-pocket operating expenses, there usually results some capital-related fixed costs, such as property taxes, insurance and interest. Many legislative bodies, including the federal government, are offering special tax amortization for installations of pollution control equipment. These show up as credits against operating costs.

8.7 Conclusion

In relating cost versus effectiveness for a particular system, each parameter that can affect the cost must be evaluated. A great deal of effort has been expended by air pollution control equipment manufacturers (particularly thermal and catalytic) to develop data outlining a least expensive operation. The fact remains, however, that each particular system application must be evaluated within the specific parameters for which it is being applied. Many process parameters will influence the decision to select one piece of equipment over

another. A complete description of the various economic considerations involved in the selection of control systems was included in Section 7.0 (Control Techniques) of the Phase I Report (1).

Regardless of how pollution control costs are accounted for, they eventually must show up as increased costs of production, and therefore, reflect a higher selling price. Industry's reluctance to initiate extensive air pollution control programs, therefore, lies in the competitive cost advantage for those companies who do not employ comparable control techniques. An unfair profit squeeze results for those firms unable to recover pollution control costs through price increases. Air pollution control, therefore, in order to be fair, should be applied equally to all companies involved.

BIBLIOGRAPHY

1. Gadomski, R. R. et al. Evaluations of Emissions and Control Technologies in the Graphic Arts Industries. Final Technical Report prepared under contract CPA-69-72 for NAPCA. Graphic Arts Technical Foundation, Pittsburgh, Pa., 1970. (NTIS PB 195 770)

2. U. S. Department of Commerce, U. S. Industrial Outlook 1972, with Projections to 1980. Government Printing Office, 1972, Chapter 7.

3. ibid, Chapter 6.

4. Anon. "$8,480 Million in 1980 for Metal Cans," Modern Lithography, Vol. 40, No. 3, March 1972, p. 10.

5. _____. "Bruno Forecasts the Future of Commercial Printing." Graphic Communications Weekly, Vol. 4, No. 42, Nov. 2, 1971, p. 8-9.

6. David, Mary P. (ed.), Proceedings of the Graphic Arts Technical Foundation Conference on Air Quality Control in the Printing Industry, Chicago, Nov. 18-19, 1970. Pittsburgh, Pa., GATF, 1971, p. 92.

7. Surgeon, Walter R. "2 New Ink Systems," Graphic Arts Monthly, Vol. 43, No. 9, Sept. 1971, p. 42-44.

8. Bassemir, Robert W. "Avoiding Solvent Emissions — Solventless Inks." Paper presented at AIChE Meeting, August 29-Sept. 1, 1971, Paper 48e. (Abstracted in Air Pollution Abstracts, Vol. 3, No. 4, April 1972, APTIC No. 36124.)

9. Burachinsky, Bohdan V. "Litho Inks and Air Quality," Modern Lithography, Vol. 38, No. 11, Nov. 1970, p. 56-57.

10. James A. Wold, Richardson Ink Company, personal communication, July 1971.

11. Anon. "New Trends in Inks and Drying," Canadian Printer & Publisher, Vol. 80, No. 6, June 1971, p. 46, 48, 52.

12. Carlick, Daniel J. "Dry Off the Press," American Ink Maker, Vol. 49, No. 12, Dec. 1971, p. 20-22.

13. Bock, Ralph F., "Novel Methods for Drying Inks," GATF Research Progress No. 86. Pittsburgh, Pa., Graphic Arts Technical Foundation, 1970.

14. Bock, Ralph F. and Rosenberg, Stanford H., "Models for Economic Evaluation of UV Ink Drying Systems," GATF Research Progress No. 89. Pittsburgh, Pa., Graphic Arts Technical Foundation, 1972.

15. Young, John. "Lately It Was the Computers, Now Inks are Big Research News," Canadian Printer and Publisher, Vol. 80, No. 7, July 1971, p. 25-26.

16. Editorial. "Solvent-Free Inks," American Ink Maker, Feb. 1971, p. 21.

17. Anon. "Inks for Web Offset," Modern Lithography, Vol. 39, No. 4, April 1971, p. 28-29.

18. Woods, D. H. and Hartshorn, I. "Microwave Drying of Inks," American Ink Maker, Vol. 48, No. 12, Dec. 1970, p. 39-40, 42, 44, 59-61.

19. Gerling, John E. "Microwave Drying" [in Japan], American Ink Maker, Vol. 48, No. 4, April 1970, p. 41.

20. Editorial. "New Methods of Drying Ink," American Ink Maker, Vol. 46, No. 10, October 1968, p. 29.

21. Federal Register, May 22 and October 6, 1970.

22. Woods, Derek and Hartshorn, Ian. "Microwave Drying for Flexo and Gravure Inks," Converter, Vol. 7, No. 9, Sept. 1970, p. 23-26, 28.

23. Macey, Kenneth, et al. "Web Offset Drying: Revolution and Evolution," Modern Lithography, Vol. 38, No. 4, April 1970, p. 29-30, 33, 50, 52-54.

24. Johnston, D. R. "Drying of Ink by Radiation," Australian Lithographer, Vol. 5, No. 30, July/Aug. 1970, p. 23.

25. Trembley, J. F. and Loring, C. M., Jr. "Drying Printing Inks and Coatings by Radio Frequency," Tappi, Vol. 52, No. 10, 1969, p. 1847.

26. Loret, H. C. "Catalyzed Inks: Headache or Cure," American Ink Maker, Vol. 47, No. 8, August 1969, p. 24-26, 56-57.

27. News note. "Bowers Describes New Inks," American Ink Maker, Vol. 48, No. 1, Jan. 1970, p. 40.

28. "'Smog-Free' Offset Ink Developed," Safety Newsletter, Printing and Publishing Section, National Safety Council, April 1970, p. 4.

29. News note. "Another Smog-Free Ink Is On The Market," Graphic Communications Weekly, Vol. 3, No. 5, Feb. 3, 1970, p. 12.

30. News note. "GPI Develops Thermofast Solventless Ink," American Ink Maker, Vol. 48, No. 6, June 1970, p. 47.

31. Anon. "Solventless Ink to Cut Pollution Announced by GPI," Printing News, Vol. 84, No. 23, June 13, 1970, p. 35.

32. _____. "Inks that Do More Than Just Print," Printing Production, Vol. 100, No. 10, July 1970, p. 23-24.

33. News note. "New Ink Cuts Air Pollution," Printer's Digest, Vol. 11, No. 3, August 1970, p. 10.

34. Anon. "What's New In Inks," Modern Lithography, Vol. 38, No. 11, Nov. 1970, p. 58-59.

35. Sitterly, Eugene F. "The Air Pollution Battle: What It Can Mean To Printers," Inland Printer/American Lithographer, Vol. 165, No. 5, August 1970, p. 80, 84.

36. Anon. "Technical View of Solventless Inks Given By Speaker at the Litho Club," Printing News, Vol. 85, No. 19, Nov. 7, 1970, p. 12, 14.

37. Sun Chemical Corp./General Printing Ink Division. "Thermofast Web Offset Ink." Northlake, Ill., May 1970.

38. News note. "A Smog-Free, Smudge-Free Ink Is Announced By Richardson," Graphic Communications Weekly, Vol. 4, No. 3, Jan. 19, 1971, p. 5.

39. Anon. "Inmont Demonstrates UV Curing Ink System," Modern Lithography, Vol. 39, No. 4, April 1971, p. 27, 34.

40. News notes. "GARC Tests New Inks," Graphic Arts Progress, Vol. 18, No. 2, Feb. 1971, p. 7.

41. "Fantastic Four-Color Driography With Solventless Inks," Graphic Communications Weekly, Vol. 4, No. 24, June 15, 1971, p. 3.

42. News release. Kohl and Madden Printing Ink Co., 1971.

43. News note. "New Heat Reactive Inks," American Ink Maker, Vol. 49, No. 7, July 1971, p. 39.

44. "Printing Inks and Air Pollution," Graphic Communications Weekly, Vol. 5, No. 22, June 6, 1972, p. 3.

45. News note. "Develops De-Inking Process," American Ink Maker, Vol. 50, No. 3, March 1972, p. 42.

46. Nass, Gerald. "Solventless Printing Inks," American Ink Maker, Vol. 49, No. 1, Jan. 1971, p. 25, 63.

47. News note. "GPI Improves Thermofast," American Ink Maker, Vol. 49, No. 7, July 1971, p. 39.

48. "SRI Develops Solventless Non-Polluting Ink," Graphic Communications Weekly, Vol. 4, No. 36, Sept. 21, 1971, p. 11.

49. Robert W. Bassemir et al, U. S. Patent 3,551,235 (1970), "Radiation-Curable Compositions."

50. Gerald I. Nass et al, U. S. Patent 3,558,387 (1971), "Photopolymerizable Vehicles."

51. Robert W. Bassemir et al, U. S. Patent 3,558, 387 (1971), "Radiation-Curable Compositions."

52. Sun Chemical Corp. British Patent 1,198,259 (1970), "Photopolymerizable Vehicles."

53. Robert W. Bassemir et al, U. S. Patent 3,551,246 (1970), "Radiation-Curable Compositions."

54. Sun's GPI Division Gets Patents for Solventless Ink Line," Graphic Communications Weekly, Vol. 4, No. 2, Jan. 12, 1971, p. 5.

55. Sun Chemical Corp./Suncure Division. "The Suncure System." Carlstadt, N. J., no date, 4 p.

56. "Sun Scales Up Suncure," American Ink Maker, Vol. 49, No. 10, Oct. 1971, p. 129.

57. Anon. "New Inks Cure Printers' Air Pollution Problems," Chemical Week, Vol. 110, No. 10, March 8, 1972, p. 44.

58. News note. "Chicago Printer Purchases Sun's UV Drying System," Graphic Communications Weekly, Vol. 5, No. 1, Jan. 4, 1972, p. 10.

59. Anon. "First Suncure System for Web Offset Printing," Modern Lithography, Vol. 39, No. 10, Oct. 1971, p. 44.

60. _____. "Holden Heralds UV Ink As Major Development," Graphic Communications Weekly, Vol. 5, No. 11, March 14, 1972, p. 12.

61. News note. "Suncure UV System Not To Profit for Two Years," Graphic Communications Weekly, Vol. 5, No. 16, April 18, 1972, p. 6.

62. Anon. "UV Ink Drying Given Major Test," Printing Management, Vol. 102, No. 7, April 1972, p. 39.

63. _____. "Web Offset Printing and UV Curing Under Production Conditions," Modern Lithography, Vol. 40, No. 6, June 1972, p. 14-15.

64. _____. "Ultraviolet Ink Curing Setting New Trends," Graphic News, Vol. 11, No. 3, March 1972, p. 12, 31.

65. Paul Whyzmuzis and Harry Linkletter, U. S. Patent 2,406,878 (1946).

66. Inmont Corp. "UV Cure Systems for Packaging Applications" and "UV Cure Ink Systems." Clifton, N. J., 1971.

67. Bruno, M. H. "UV Inks," What's New(s) in Graphic Arts, Vol. 1, No. 1, April 1972, p. 2.

68. Burns, James F., Jr. "Web's New Pollution Solution," Printing Impressions, Vol. 14, No. 7, Dec. 1971, p. 10A-10B, 10D.

69. "Pilot Installation of UV...in New York," Printing News, Vol. 88, No. 1, Jan. 8, 1972, p. 5.

70. News note. "Ultra-Violet Ink Curing System Reduces Air Pollution," Graphic Communications Weekly, Vol. 5, No. 12, March 21, 1972, p.11.

71. Bruno, M. H. "UV Curing for Plastic Containers," What's New(s) in Graphic Arts, Vol. 1, No. 2, June 1972, p. 7.

72. News notes. "New Solvent-Free Resin," American Ink Maker, Vol. 49, No. 6, June 1971, p. 50.

73. "No-lacquer Ink," American Ink Maker, Vol. 50, No. 6, June 1972, p. 40.

73a. Printing Management, Vol. 103, No. 5, February 1973, p. 33.

74. Carruthers, J. D. "Web Offset Press Air Pollution: How Serious Is It?", Inland Printer/American Lithographer, Vol. 167, No. 1, April 1971, p. 50-51.

75. News notes. "Sun Shines Light on Web Dryer/Emission System," Graphic Communications Weekly, Vol. 4, No. 28, July 13, 1971, p. 7.

76. "New Web Drying System," American Ink Maker, Vol. 49, No. 8, August 1971, p. 50.

77. News note. Sun Graphic Systems. Trade Literature, Addison, Ill., no date.

78. News releases. TEC Systems Inc., DePere, Wis., May 27 and Nov. 5, 1971.

79. News note. "TEC Afterburner Features Turbomix," Graphic Communications Weekly, Vol. 5, No. 13, March, 1972, p. 14.

80. News release. TEC Systems Inc., DePere, Wis., June 5, 1972.

81. Schuster, James H. "Gas Curtailment Affects Web Offset Field," Printing Management, Vol. 102, No. 10, July 1972, p. 35-37.

82. Reference 6, p. 103.

83. Anon. "Solvent Vapors Under Fire," Environmental Science and Technology, Vol. 5, No. 11, Nov. 1971, p. 1086-1087.

84. Calvert, Seymour. "Air Pollution Research Problems, TR-1 Research Committee Survey Report No. 1"[Air Pollution Control Association], J. Air Pollution Control Association, Vol. 21, No. 11, Nov. 1971, p. 694-701.

85. Krockta, H. and Lucas, R. L. "Information Required for the Selection and Performance Evaluation of Wet Scrubbers," J. Air Pollution Control Association, Vol. 22, No. 6, June 1972, p. 459-462.

86. Federal Register, Vol. 37, No. 124, June 27, 1972, p. 12644.

86 a.-d. See page 213.

87. MacPhee, R. D. and Kuramoto, M. "Recommended Test Methods for Organic Solvents and Vapors (Rule 66)". Air Pollution Control District, County of Los Angeles, April 1968.

88. Devorkin, H. "Sampling for Compliance with Rule 66". Paper No. 69-49, presented at the 62nd Annual Meeting, Air Pollution Control Association, New York, June 1969, p. 1-30.

89. Gadomski, R. R., Gimbrone, A. V., and Green, W. J., "Sampling Methodology and Data Treatment," Sampling and Analysis of Stack Effluent for Graphic Arts Processes, Part I, GATF Research Progress Report No. 93, Graphic Arts Technical Foundation, Pittsburgh, Pa., 1972.

90. Gadomski, Raymond R., Green, William J. and David, Mary P. "Environmental Control Program," GATF Research Department Report of Progress, 1971. Pittsburgh, Pa., Graphic Arts Technical Foundation, 1972, p. 35-40; p. 41-45.

91. Worthing, Archie G. and Geffner, Joseph, Treatment of Experimental Data, New York, N. Y., John Wiley and Sons, Inc., 1943, p. 205-214; and Shoemaker, David P., and Garland, Carl W., Experiments in Physical Chemistry, New York, N.Y., McGraw-Hill Book Company, Inc., 1962, pp. 30-34.

92. Youden, W. J., Statistical Methods for Chemists, New York, N. Y., John Wiley and Sons, Inc., 1951, Chapter 5.

93. ibid, p. 13-20, 24-29, Chapter 5.

94. Carruthers, J. D., "Our Experience with Air Pollution Control in Los Angeles, Part II", PAR-lance No. 123, Printing Industries of America, Inc., February 1973.

95. Hays, D.R. Official Digest, Vol. 36, No. 473, 1963, p. 605-624.

96. Mueller, James H., "Cost Comparison for Burning Fumes and Odors," Pollution Engineering, Vol. 3, No. 6, Nov./Dec. 1971, p. 18-20.

97. Turk, A., Haring, R.D. and Okey, R. W. "Odor Control Technology," Environmental Science and Technology, Vol. 6, No. 7, July 1972, p. 602-607.

98. Povey, J. H., "Catalytic Incineration Cuts Metal Lithography Air Pollution," Inland Printer/American Lithographer, Vol. 168, No. 2, Nov. 1971, p. 50-53.

99. Yocum, J. E. and Duffee, R. A., "Controlling Industrial Odors," Chemical Engineering, Vol. 77, No. 13, June 15, 1970, p. 164-182.

100. Thomaides, Lazarus, "Why Catalytic Incineration?", Pollution Engineering, Vol. 3, No. 3, May/June 1971, p. 32-33.

101. Skinner, C.F. and Downham, R. E., "Analyzing the Air Pollution Problems of the Printing Industry," Technical News Bulletin of Environmental Pollution Control Systems, Oakbrook, Ill. May 4, 1971

86a. Anon. "$500-Million Market for Air Monitors", Environmental Science and Technology, Vol. 4, No. 8, August 1970, pp. 639-640.

b. Heylin, Michael. "Pollution Control Instrumentation", Chemical & Engineering News, Vol. 49, No. 7, Feb. 15, 1971, pp. 78-81.

c. Maugh, Thomas H., II. "Air Pollution Instrumentation: A Trend Toward Physical Methods", Science, Vol. 177, No. 4050, August 25, 1972, pp. 685-687.

d. Clean Air and Water News, Vol. 4, No. 26, June 30, 1972, p. 422, reporting on a Frost & Sullivan survey, "The Air Pollution Control Market".

ADDITIONAL REFERENCES

Ackerman, Joseph F. "Inks That Cure By Ultraviolet Light," Modern Lithography, Vol. 40, No. 3, March 1972, p. 18-20.

Adams, Donald F., editor, "Air Pollution Instrumentation." Pittsburgh, Pa., Instrument Society of America, 1966.

Adams, M.L. "Quantitative Mixed Solvent Analysis by Infrared Spectrophotometry." U.S. Army Coating and Chemical Laboratory, Aberdeen Proving Ground, Maryland, May 1969, CFSTI Pub. No. AD 688 588.

Air Pollution Control Field Operations Manual, Public Health Service Publication No. 937, Washington, D.C., U. S. Department of Health, Education and Welfare, 1962.

Air Quality Instrumentation, Vol. I. Instrument Society of America, Pittsburgh, Pa., 1972.

American Conference of Governmental Industrial Hygienists, "Air Sampling Instruments for Evaluation of Atmospheric Contaminants," 4th edition, Cincinnati, ACGIH, 1972.

American Industrial Hygiene Association, "Air Pollution Manual: Part 2. Control Equipment." Detroit, AIHA, 1968.

Anon. "Odor Panel Smells Trouble," Modern Manufacturing, Vol. 1, No. 7, December 1968, p. 164.

Atmospheric Sampling Training Course Manual, U. S. Department of Health, Education and Welfare, NAPCA, Research Triangle Park, N.C., 1969.

Bassemir, R. W. "New Technology and the Ink Industry," American Ink Maker, Vol. 3, No. 49, March 1971, p. 24-25, 70.

Bassemir, Robert. "Status of Ink: An Overview of What to Expect in Tomorrow's Technology," Printing Magazine, Vol. 95, No. 5, May 1971, p. 50-51, 86.

Carlick, Daniel J. "The Suncure System," Penrose Annual, Vol. 64, 1971, p. 168-170.

Chapman, Robert L., ed., "Environmental Pollution Instrumentation." Pittsburgh, Pa., Instrument Society of America, 1969.

Cooper, Hal B. H. and Rossano, August T., "Source Testing for Air Pollution Control." Stamford, Conn., Environmental Science Services, 1970.

Cross, Frank L. "Handbook on Incineration: Guide to Theory, Design, Operation, and Maintenance." Westport, Conn., Technomic Publishing, 1972.

de Seversky, Alexander P. U.S. Patent 3,315,445 (1967), "Integrated Mechanical Filter and E ectrostatic Precipitator System for Broad Spectrum Purification."

Devorkin, H., Chass, R.L., Fudurich, A.P., and Kanter, C.V. Source Testing Manual, Air Pollution Control District, County of Los Angeles, 1965.

Editorial. "Printing Inks and the Environment," American Ink Maker, Vol. 49, No. 3, March 1971, p. 23.

Environmental Protection Agency, "Standards of Performance for New Stationary Sources," Notice of Proposed Rulemaking, Federal Register, 36, No. 159, p. 15704-15722, August 17, 1971.

Gadomski, Raymond R. and David, Mary P. "Air Pollution Control Program," GATF Research Department of Progress, 1969. Graphic Arts Technical Foundation, Pittsburgh, Pa. p. 183-196.

Gadomski, Raymond R., Green, William J., and David, Mary P. "Environmental Control Program," GATF Research Department Report of Progress, 1970. Pittsburgh, Pa., Graphic Arts Technical Foundation, p. 77-103.

Haaland, Harold, H., editor. Methods for Determination of Velocity, Volume, Dust and Mist Content of Gases, 7th ed., Bulletin WP50. Western Precipitation Division/Joy Manufacturing Co., Calif. 1968.

Hall, H. J. et al. "Research and Development Needs for Air Pollution Instrumentation," Journal Air Pollution Control Association, Vol. 20, No. 12, December 1970, p. 804-807.

Hankin, J. W. et al. "Microwaver Paper Drying Experience and Analysis," Tappi, Vol. 53, No. 6, June 1970, p. 1063-1070.

Hardison, Leslie C. U. S. Patent 3,632,304 (1972), "Catalytic Oxidation of Waste Gas Streams with Fluidizable Subdivided Particles."

Herfin, Michael. "Pollution Control Instrumentation," Chemical and Engineering News, Vol. 49, No. 7, Feb. 15, 1971, p. 78-81.

Hodgman, C. D., editor. The Handbook of Chemistry and Physics, The Chemical Rubber Publishing Company, Cleveland, Ohio, 44th ed., 1962.

Jenkins, H. N. "Odor Measurement," Field Enforcement Aspects of Air Pollution Training Manual, U. S. Department of Health, Education and Welfare, NAPCA, Research Triangle Park, N.C. 1968

Johnson, K.E. "Coatings, Adhesives, Ecology," Modern Lithography, Vol. 40, No. 3, March 1972, p. 12-13.

Kaminski, R. K. "Instrumentation for Rent and Lease," Instrumentation Technology, Vol. 19, No. 7, July 1972, p. 59-64.

Karlson, E. L. "Ozone, Friend or Foe?", Pollution Engineering, Vol. 4, No. 3, May/June 1972, p. 32-33.

King, William H. "The Monitoring of Hydrogen, Methane, and Hydrocarbons in the Atmosphere," Environmental Science and Technology, Vol. 4, No. 12, December 1970, p. 1136-41.

Kreuger, L. B. et al. "Air Pollution: Sensitive Detection of Ten Pollutant Gases by Carbon Monoxide and Carbon Dioxide Lasers," Science, Vol. 177, No. 4046, July 28, 1972, p. 347-349.

Krotosynski, B. K., and Dravnieks, A. "Systematization of Analytical and Odor Control Data on Odorous Air." IIT Research Institute, Internal Report (undated). 37 p.

Kudlak, Rudolf. Ringelmann Smoke Chart. Information Circular No. 8333, U. S. Department of Interior, Bureau of Mines. May 1967.

MacPhee, R. D. and Kuramoto, M. "Methods of Organic Solvent Analyses Used in Los Angeles," Journal of the Air Pollution Control Association, Vol. 19, No. 6, June 1969, p. 443-446.

Maida, S. Michael. "GTA Probes Gravure Technology," American Ink Maker, Vol. 50, No. 6, June 1972, p. 22, 24, 28.

Maker, T.P. "Semi-Quantitative Analysis of Hydrocarbon Mixtures by Gas Chromatography Without Complete Separation of Components," Journal of Gas Chromatography, Vol. 14, No. 10, October 1966.

McCann, Roger B. "Note on the Construction of an Hydrocarbon Inducer," Journal Air Pollution Control Association, Vol. 21, No. 8, August 1971, p. 502.

McInnes, Alan. "Pre-Pol — The Revolution of Catalyzed Systems," Australian Lithographer, Vol. 7, No. 37, Sept./Oct. 1971, p. 28-31.

Middleton, John T. "What Government Expects of Industry," Modern Lithography, Vol. 40, No. 5, May 1972, p. 8-10, 46.

Morgan, George B. et al. "Air Pollution Surveillance Systems," Science, Vol. 170, No. 3955, Oct. 16, 1970, p. 289-296.

Morrow, N. L. et al "Sampling and Analyzing Air Pollution Sources," Chemical Engineering, Vol. 79, No. 2, January 24, 1972, p. 84-98.

Nemoto, Yuhei. "New Solventless Fast-Drying Inks," Graphic Arts Japan, Vol. 13, 1971-72, p. 38-41.

Nilsen, Joan M. "Next Pollution Problem: How to Monitor Emissions," Chemical Engineering, Vol. 78, No. 12, May 31, 1971, p. 30-32.

O'Connor, A. John. "U V Curing — System of the 70's," Austrailian Lithographer, Vol. 7, No. 37, Sept./Oct. 1971, p. 23-27.

Perry, J. H., editor. Chemical Engineers' Handbook, 3rd ed., McGraw-Hill, New York, 1950.

Preston, Mark D. "Is Dielectric Drying for Coating?", Modern Converter Vol. 15, No. 1, Jan. 1971, p. 39-41.

Ritchie, Roy. "Microwave Drying," Penrose Annual, Vol. 63, 1970, p. 193-196.

Ritchie, Roy and McFarlane, John. "Microwave Drying of Sheet Work," Printing Trades Journal, No. 1006, December 1970, p. 36-37.

Ruch, Walter E., editor. "Chemical Detection of Gaseous Pollutants: An Annotated Bibliography." Ann Arbor, Ann Arbor Science Publishers, 1966.

Ruch, Walter, "Quantitative Analysis of Gaseous Pollutants." Ann Arbor, Arbor Science Publishers, 1970.

Saltzman, B. E. "Standardization of Methods for Measurement of Air Pollutants," Journal of the Air Pollution Control Association, Vol. 18, No. 5, May 1968, p. 326-329.

Sharp, T.K.R. "Ink and Man's Environment," Color Engineering, Vol. 9, No. 4, July/August 1971, p. 22-23.

Stamulis, Aristides, et al. "The CO_2 Pulse Technique for Determining the Condition of Adsorbent Charcoal Beds," Journal of the Air Pollution Control Association, Vol. 21, No. 11, Nov. 1971, p. 709-712.

Strahan, Robert. "Gravure Inks, Key to Efficient Printing," American Ink Maker, Vol. 49, No. 8, August 1971, p. 25-26, 28.

Souka, A. "New Regenerative Afterburner Design," Pollution Engineering, Vol. 4, No. 3, May/June 1972, p. 45.

Stern, Arthur C., editor. "Air Pollution" (3 vols.) Vol. 1 "Air Pollution and Its Effects;" Vol. 2 "Analysis, Monitoring and Surveying;" Vol. 3 "Sources of Air Pollution and Their Control." New York, Academic Press, 1968.

Thompson, Hugh. "Ozone, Antidote for Water Pollution," Pollution Engineering, Vol. 4, No. 3, May/June 1972, p. 34-36.

Tyrrell, John J., U. S. Patent 3,470,054 (1969). "Method of Process Color Printing with Water-Base Inks."

U. S. Department of Health, Education and Welfare, "Hydrocarbons and Air Pollution: An Annotated Bibliography." NAPCA Pub. No. AP-75. Washington, D.C. Government Printing Office, 1970.

U. S. Department of Health, Edcuation and Welfare, National Air Pollution Control Administration, Research Triangle Park, N.C. Source Sampling Training Course Manual, 1970. This manual has been specially prepared for trainees attending a course and is not generally available.

Wartburg, A. F., Pate, J. B. and Lodge, J. P., Jr. "An Improved Gas Sampler for Air Pollutant Analysis," Environmental Science and Technology, Vol. 3, No. 8, August 1967, p. 767-768.

Wilks, Paul A., Jr. "Infrared Analysis of Process Emissions," Chemical Engineering, Vol. 78, No. 28, December 13, 1971, p. 120, 122, 124.

Anon. "A Printer's Commitment to a Better Environment," Printing Management, Vol. 102, No. 4, January 1972, p. 30-33.

_____. "Better Inks and Papers for Web Offset Predicted," Graphic Communications Weekly, Vol. 3, No. 7, April 28, 1970, p. 7.

_____. "Instrument Leasing, Rental Expand," Chemical and Engineering News, Vol. 49, No. 13, March 29, 1971, p. 37-38.

_____. "Pollution: Lasers Analyze Air," Chemical and Engineering News, Vol. 49, No. 28, July 12, 1971, p. 12.

_____. "Pollution Measurements Lack Standards," Chemical and Engineering News, Vol. 49, No. 19, May 10, 1971, p. 52-53.

_____. "Researchers Seek Pollution-Free Gravure Ink," Gravure, Vol. 17, No. 9, September 1971, p. 10, 12, 30.

_____. "Solventless Inks: What They Are And How They Work," Applied Graphics, Vol. 10, No. 3, March 1971, p. 10.

_____. "UK Debut for UV System, "British Printer, Vol. 84, No. 8, August 1971, p. 49, 51.

_____. "Water-Based Gravure Ink Formulated to Fight Air Pollution," Graphic Communications Weekly, Vol. 5, No. 21, May 23, 1972, p. 14.

News notes. "In-line Gloss Coating on Flexo and Gravure Presses," Graphic Communications Weekly, Vol. 4, No. 50, December 28, 1971, p. 7.

"New S & V Inks Lock-In To Celcon and Other Plastics," Graphic Communications Weekly, Vol. 3, No. 37, September 29, 1970, p. 14.

"Priority Processing Granted 660 Anti-Pollution Inventions," Journal of the Air Pollution Control Association, Vol. 22, No. 5, May 1972, p. 400.

"Qual Analysis: New Pyrolysis Method," Chemical and Engineering News, Vol. 48, No. 49, November 23, 1970, p. 11.

"Richardson Reveals New Products: Plastic, Zinc, and Ink," Graphic Communications Weekly, Vol. 5, No. 10, March 7, 1972, p. 9.

APPENDIX A
Air Pollution Control Advisory Committee

AIR POLLUTION CONTROL ADVISORY COMMITTEE

Anthony J. Allegretti
Vice President Engineering
W. F. Hall Printing Company
4600 Diversey Street
Chicago, Illinois 60639

Fred Bock
Facilities Manager
Milprint, Inc.
Milwaukee, Wisconsin 53201

Gerald L. Brewer
UOP Air Correction Division
Rokeneke Road
Darien, Connecticut 06820

Geoffrey Buckwalter
Graphic Arts Research
Cities Service Company
Drawer 4
Cranbury, New Jersey 05812

Harvey A. Buntrock
Basic Control Systems, Inc.
146 E. Washington
Lombard, Illinois 60148

Bohdan Burachinsky
Vice President
Inmont Corporation
Central Research Laboratories
1255 Broad Street
Clifton, New Jersey 07015

O. B. Burns, Jr.
Administrator
Water & Air Conservation
Westvaco Corporation
299 Park Avenue
New York, N. Y. 10017

Daniel J. Carlick, Manager of
Technology and Marketing
Sun Chemical Corporation
135 West Lake Street
Northlake, Illinois 60164

Charles W. Cook
Vice President
The Fawcett Printing Corporation
1900 Chapman Avenue
Rockville, Maryland 20852

David A. Cutler
Triangle Publications, Inc.
400 North Broad Street
Philadelphia, Pennsylvania 19101

Warren R. Daum
Executive Vice President
Gravure Technical Association
60 East 42nd Street
New York, New York 10017

Mr. Robert G. Flagg
Sun Graphic Systems
Div. of Sun Chemical Corporation
59 Industrial Road
Addison, Illinois 60101

Keith Fry
Ass't. of the Vice President
International Paper Company
220 East 42nd Street
New York, New York 10017

B. L. Gamble, Director
Corporate Technical Development
& Services
Continental Can Company
1200 West 76th Street
Chicago, Illinois 60620

Peter Giammanco, Jr.
Vice President
Central Can Company, Inc.
3200 South Kilbourn Avenue
Chicago, Illinois 60623

Mohamad Hassibi
Plant Superintendent
Herbick & Held Printing Co.
1117 Wolfendale Street
Pittsburgh, Pennsylvania 15233

Urban Hirsch
Bowers Printing Ink Company
of California
12727 South Van Ness Avenue
Hawthorne, California 90250

George Holme
Research Engineer
R. R. Donnelley & Sons Company
2223 Martin Luther King Drive
Chicago, Illinois 60616

Alfred Jasser
President
Anchor Chemical Co., Inc.
500 West John Street
Hicksville, New York 11801

Charles Kennedy
Director of Development
The Colonial Press, Inc.
Clinton, Massachusetts 01510

James S. Livingston
Charles T. Main, Inc.
441 Stuart Street
Boston, Massachusetts 02116

William A. Magie, Jr.
President
Magie Bros. Oil Company
9101 Fullerton Avenue
Franklin Park, Illinois 60131

George Mattson
Web Offset Section
Printing Industries of America, Inc.
1730 N. Lynn Street
Arlington, Virginia 22209

Keith Nickoley
Executive Vice President
Roberts & Porter, Inc.
4140 W. Victoria Avenue
Chicago, Illinois 60646

George J. Parisi
Executive Secretary
Flexographic Technical Association
1415 Avenue M
Brooklyn, New York 11230

Winslow Parker, Jr.
President
Parker Metal Decorating Company
Howard & Ostend Streets
Baltimore, Maryland 21230

Joseph H. Povey
Product Specialist
Matthey Bishop, Inc.
Apparatus System Division
Malvern, Pennsylvania 19355

James X. Ryan
General Manager
Printing Industry of Illinois
12 East Grand Avenue
Chicago, Illinois 60611

Elgin D. Sallee, Corporate Director
Environmental Sciences
American Can Company
American Lane
Greenwich, Connecticut 06830

E. W. Starke
Shell Oil Company
One Shell Plaza, Room 1567
P. O. Box 2463
Houston, Texas 77001

John C. Wurst
Vice President
Henry Wurst, Inc.
1331 Saline Street
N. Kansas City, Missouri 64116

APPENDIX B
Figures

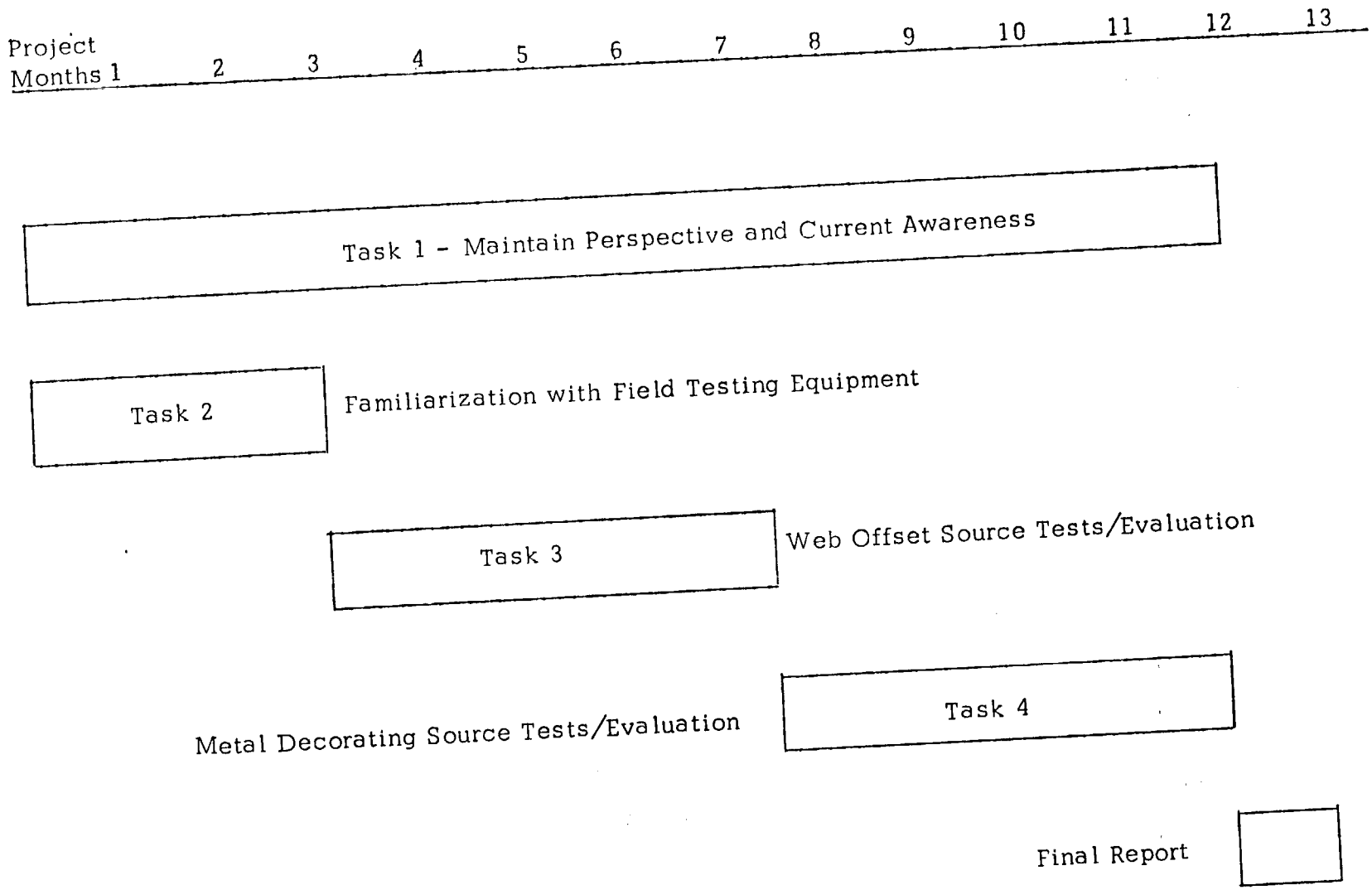

Figure 1 — GATF-EPA Phase II Program (as originally approved by EPA)

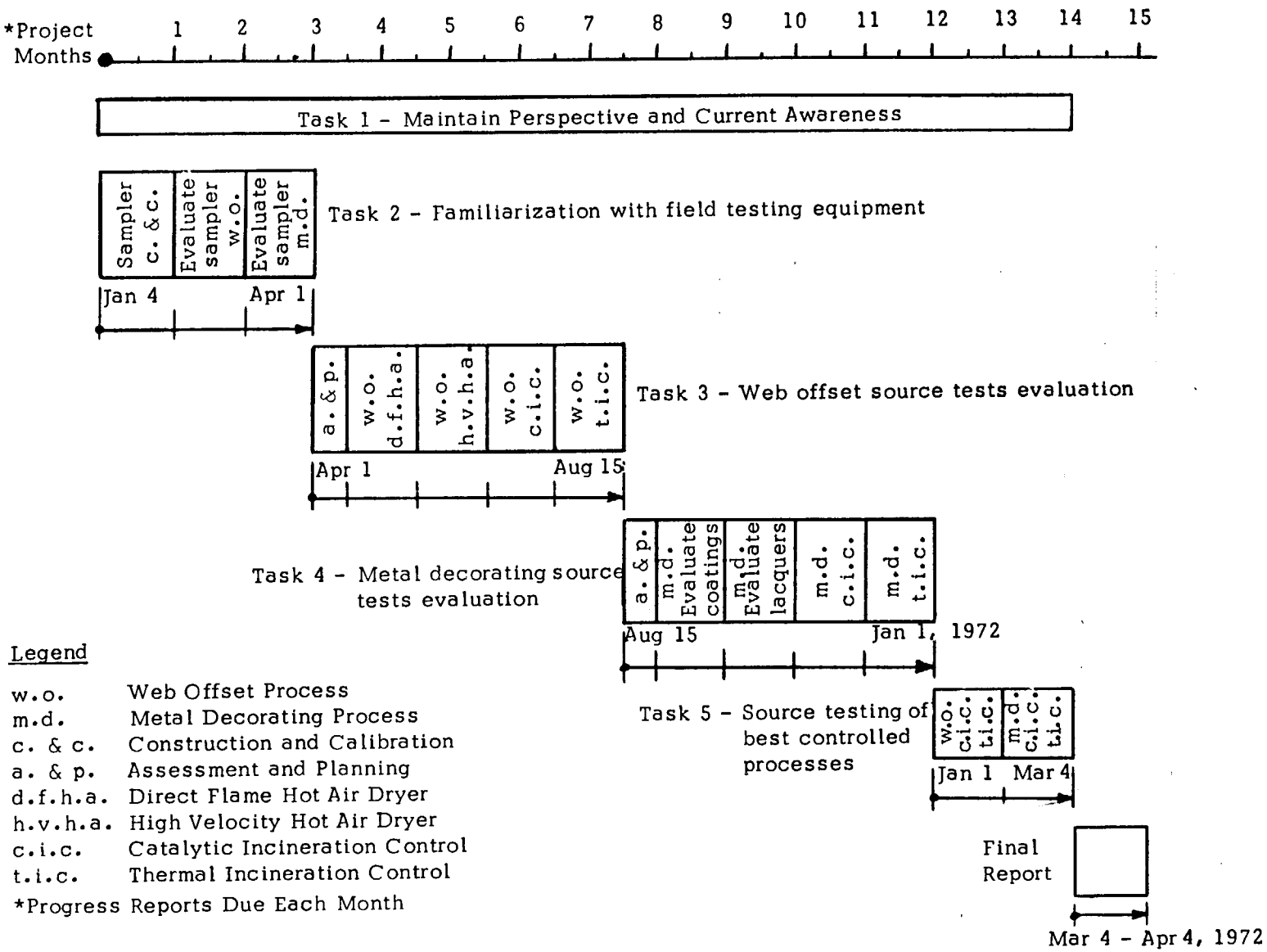

Figure 2 — GATF-EPA Phase II Study (Inclusive of Contract Modifications I to 5).

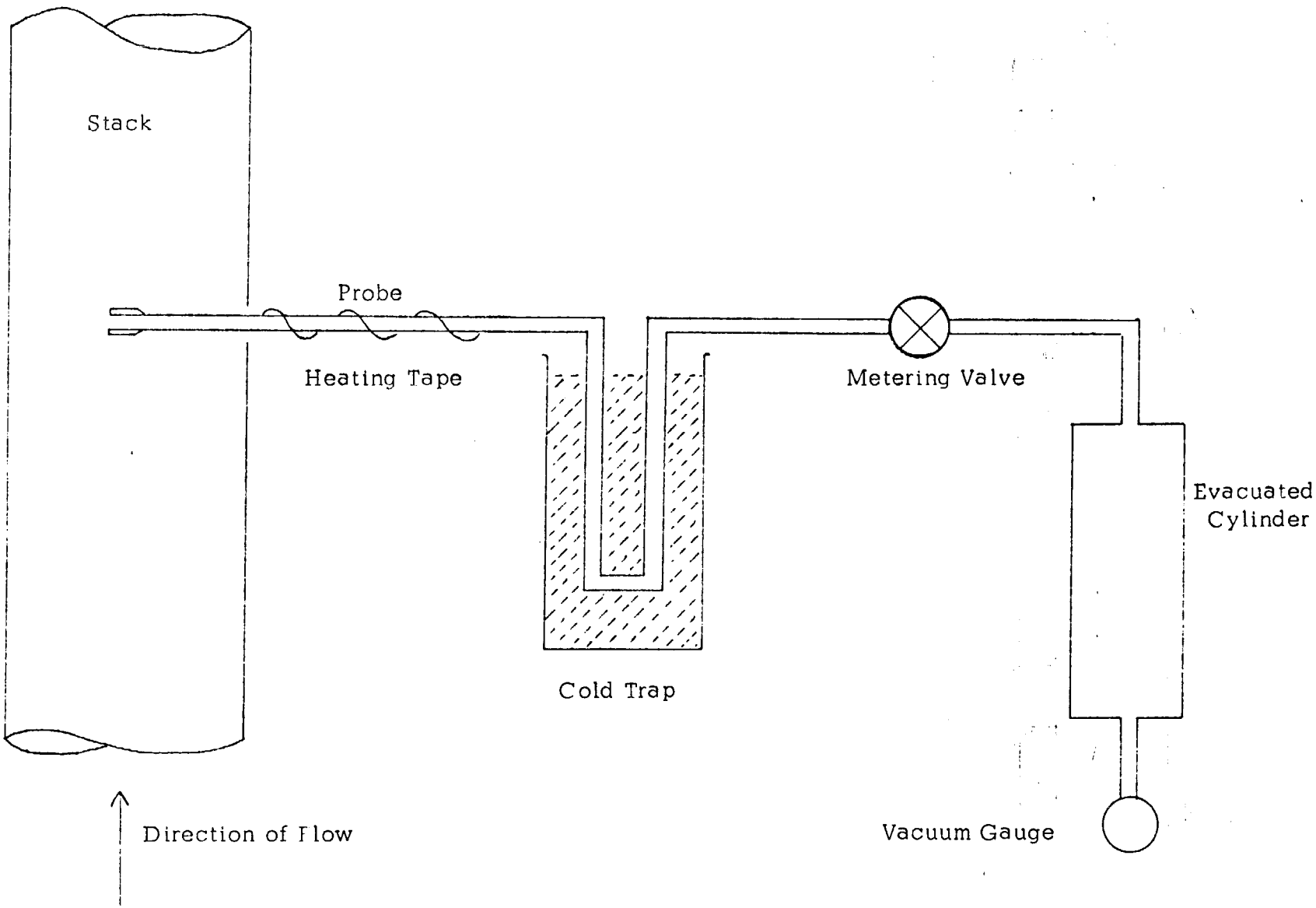

Figure 3 — Grab Sample Train Using Evacuated Container Technique Principle of Collection

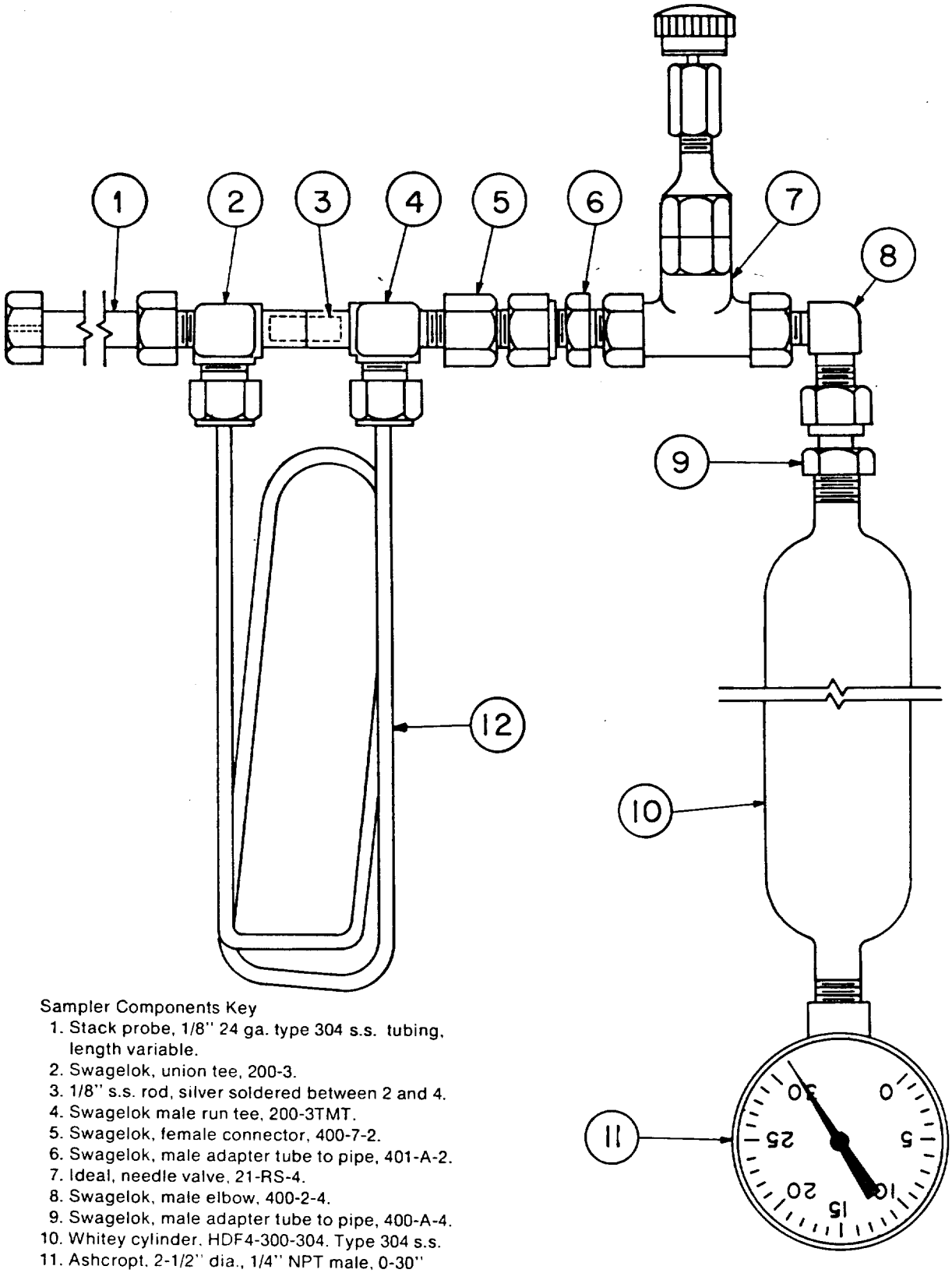

Sampler Components Key

1. Stack probe, 1/8" 24 ga. type 304 s.s. tubing, length variable.
2. Swagelok, union tee, 200-3.
3. 1/8" s.s. rod, silver soldered between 2 and 4.
4. Swagelok male run tee, 200-3TMT.
5. Swagelok, female connector, 400-7-2.
6. Swagelok, male adapter tube to pipe, 401-A-2.
7. Ideal, needle valve, 21-RS-4.
8. Swagelok, male elbow, 400-2-4.
9. Swagelok, male adapter tube to pipe, 400-A-4.
10. Whitey cylinder, HDF4-300-304. Type 304 s.s.
11. Ashcropt, 2-1/2" dia., 1/4" NPT male, 0-30" vacuum.
12. Trap, 1/8" 24 ga. s.s. tubing, length variable.

Figure 4 — Schematic Representation of Prototype Field Sampling Apparatus

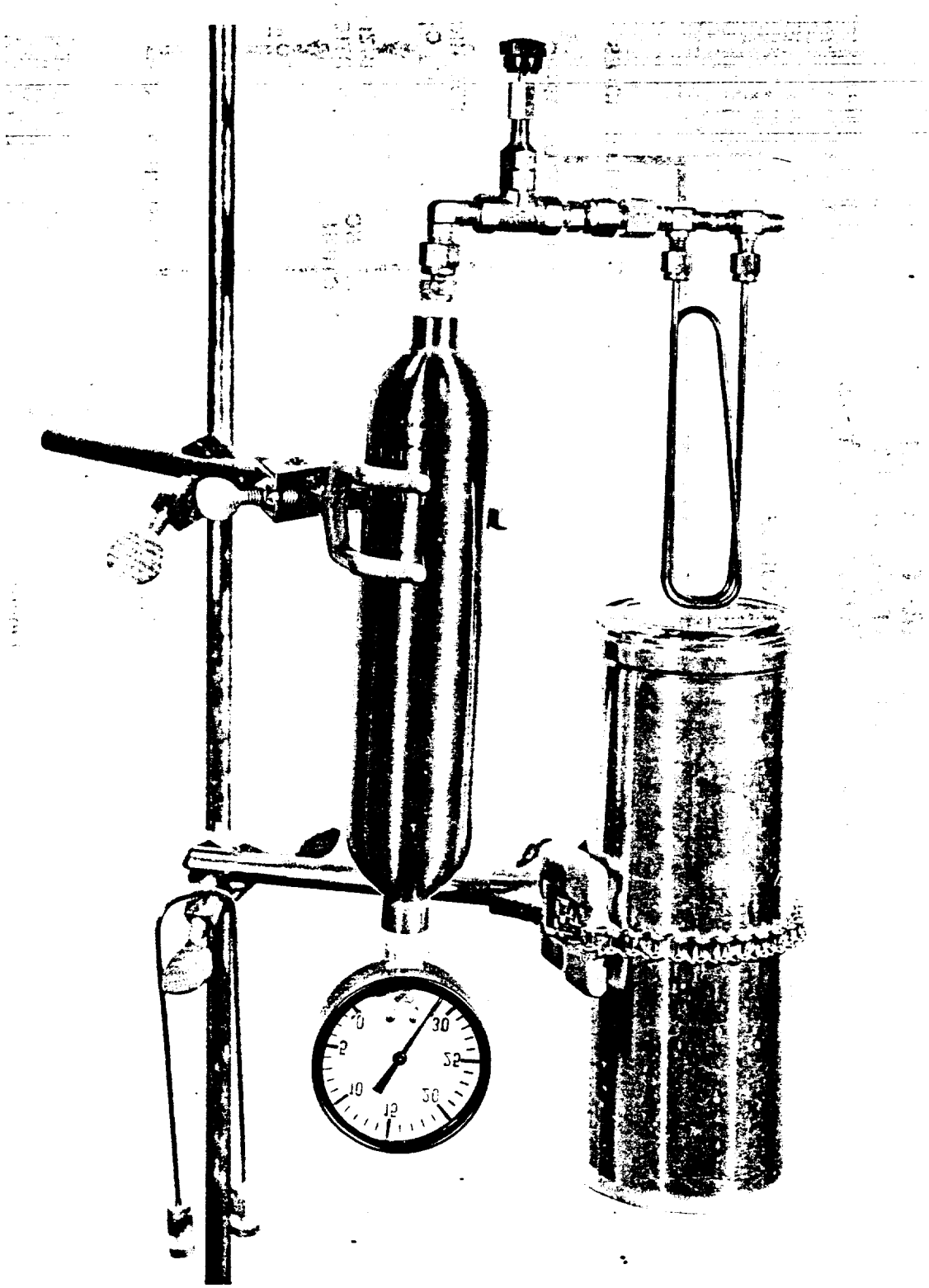

Figure 5 — Prototype Field Sampling Apparatus

CAL-COLONIAL CHEMSOLVE CHROMATOGRAPHIC FLAME IONIZATION ANALYSIS

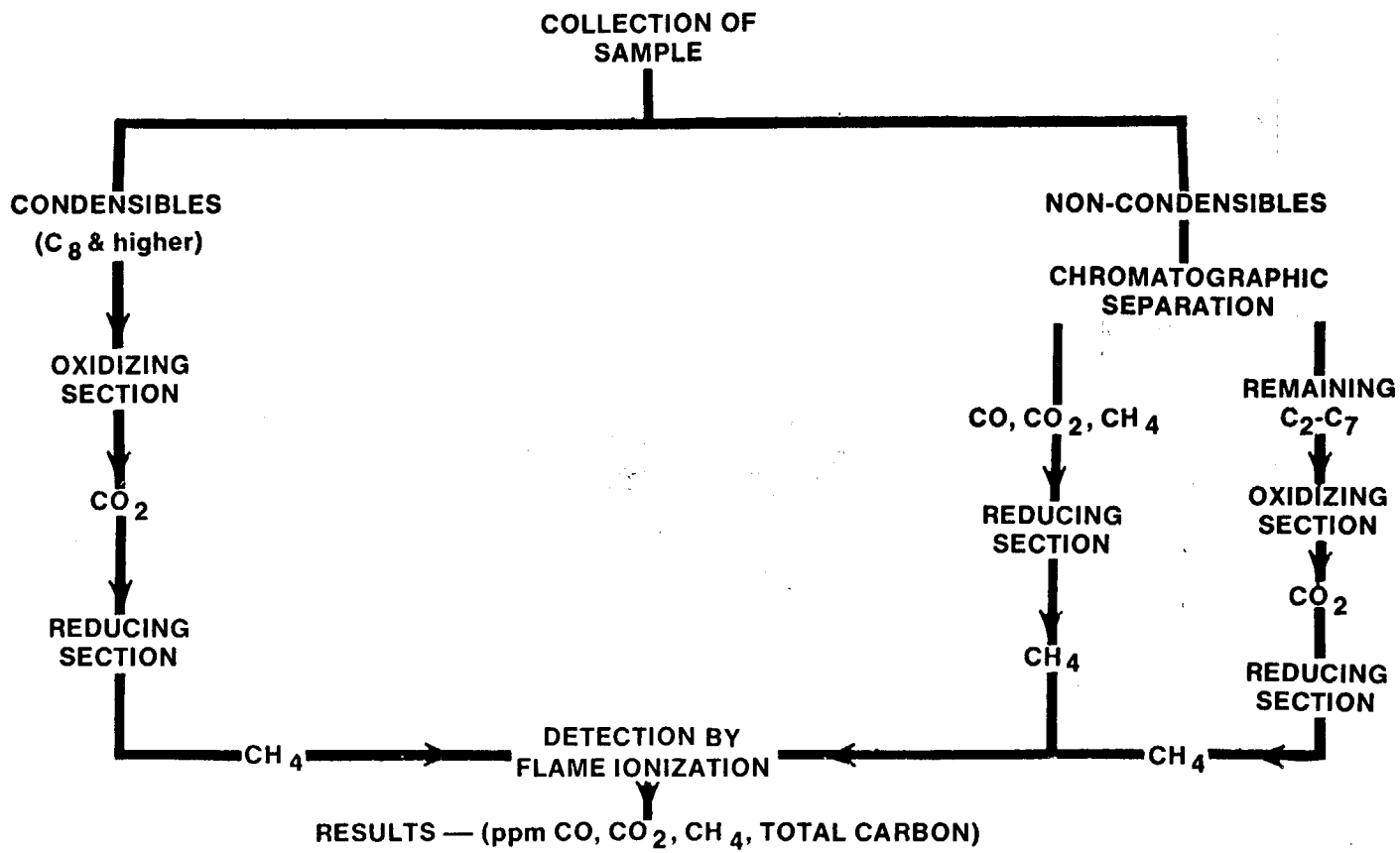

Figure 6

LOS ANGELES A.P.C.D.

CHROMATOGRAPHY — COMBUSTION — INFRARED ANALYSIS

(TOTAL COMBUSTION ANALYSIS)

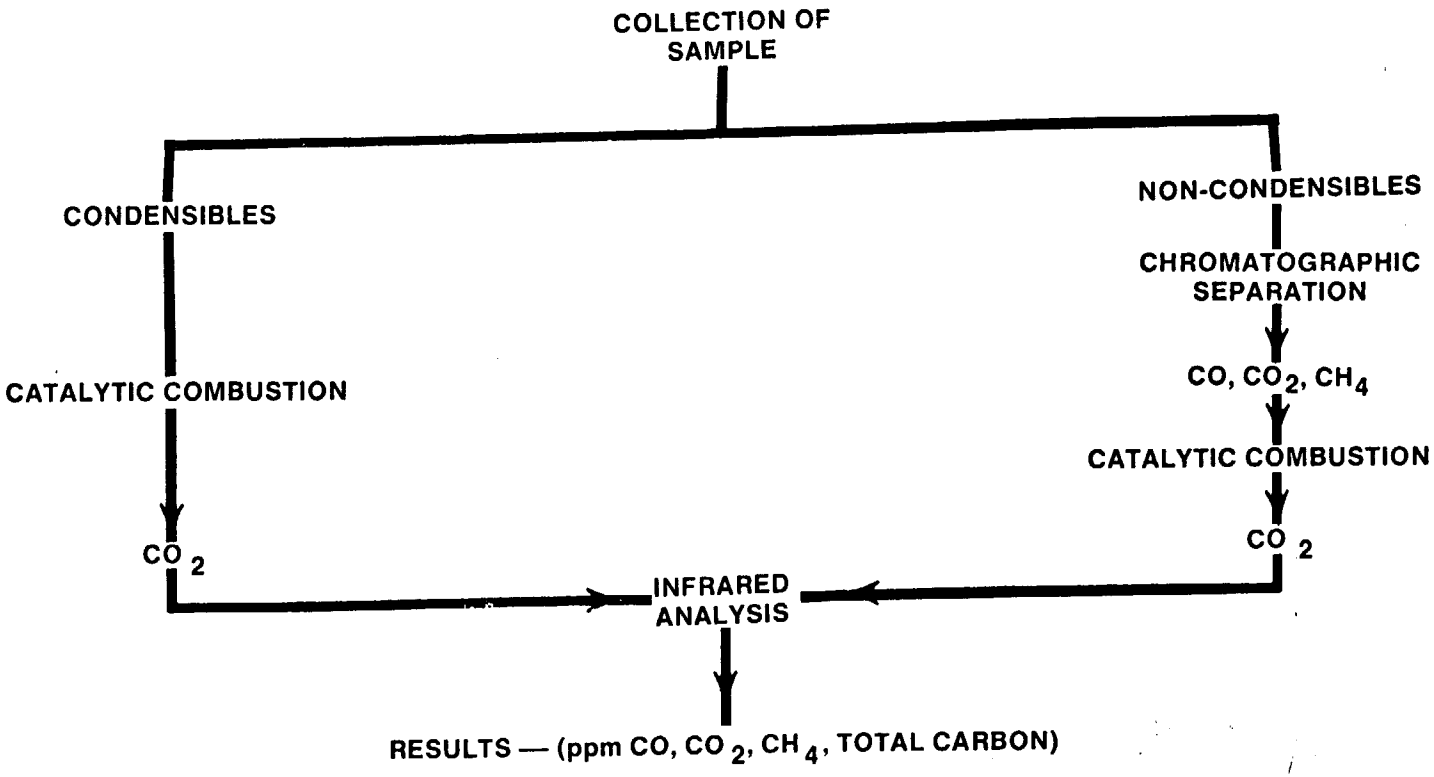

Figure 7

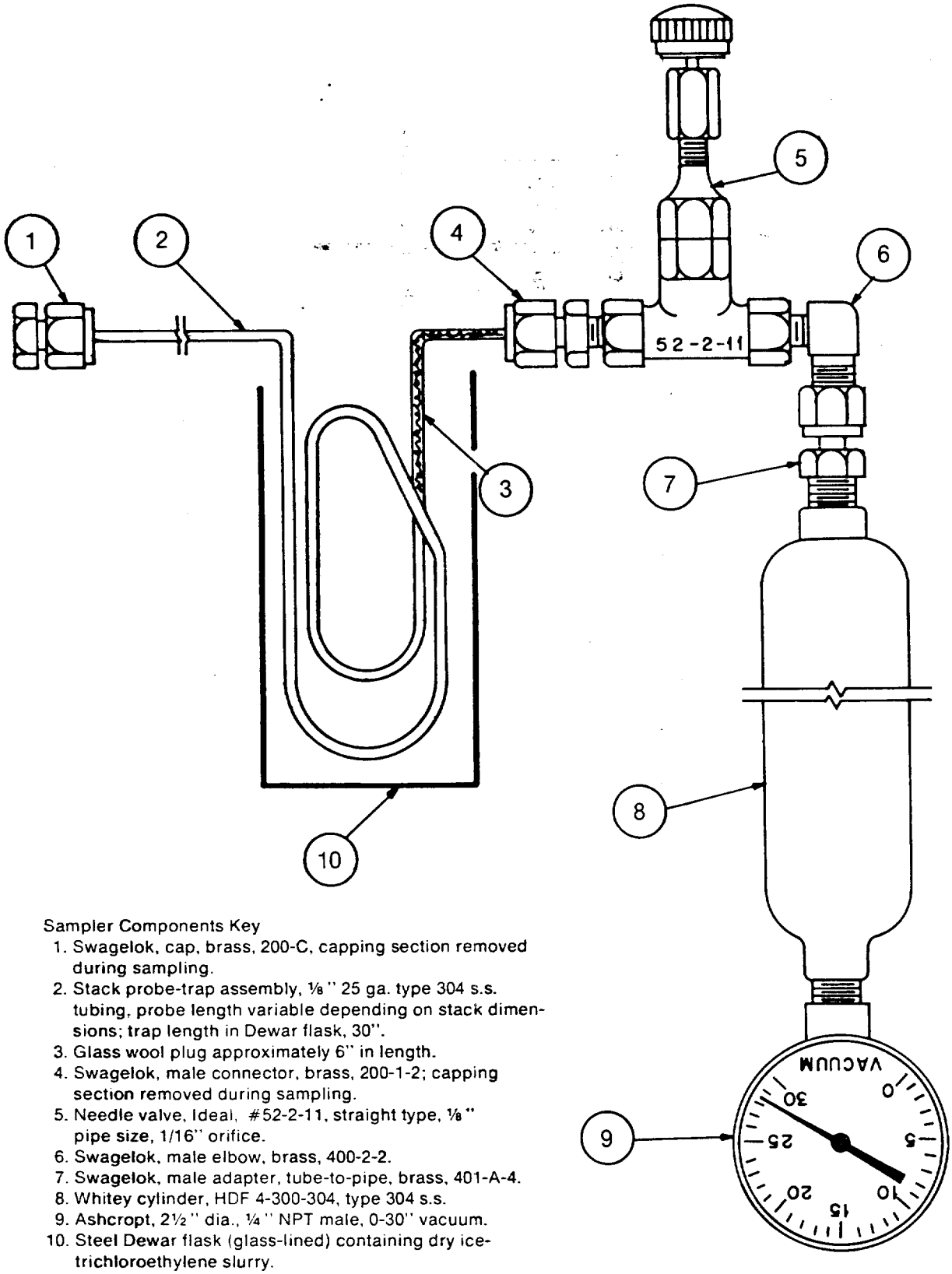

Sampler Components Key

1. Swagelok, cap, brass, 200-C, capping section removed during sampling.
2. Stack probe-trap assembly, ⅛" 25 ga. type 304 s.s. tubing, probe length variable depending on stack dimensions; trap length in Dewar flask, 30".
3. Glass wool plug approximately 6" in length.
4. Swagelok, male connector, brass, 200-1-2; capping section removed during sampling.
5. Needle valve, Ideal, #52-2-11, straight type, ⅛" pipe size, 1/16" orifice.
6. Swagelok, male elbow, brass, 400-2-2.
7. Swagelok, male adapter, tube-to-pipe, brass, 401-A-4.
8. Whitey cylinder, HDF 4-300-304, type 304 s.s.
9. Ashcropt, 2½" dia., ¼" NPT male, 0-30" vacuum.
10. Steel Dewar flask (glass-lined) containing dry ice-trichloroethylene slurry.

Figure 8 — Modified Hydrocarbon Sampling Apparatus

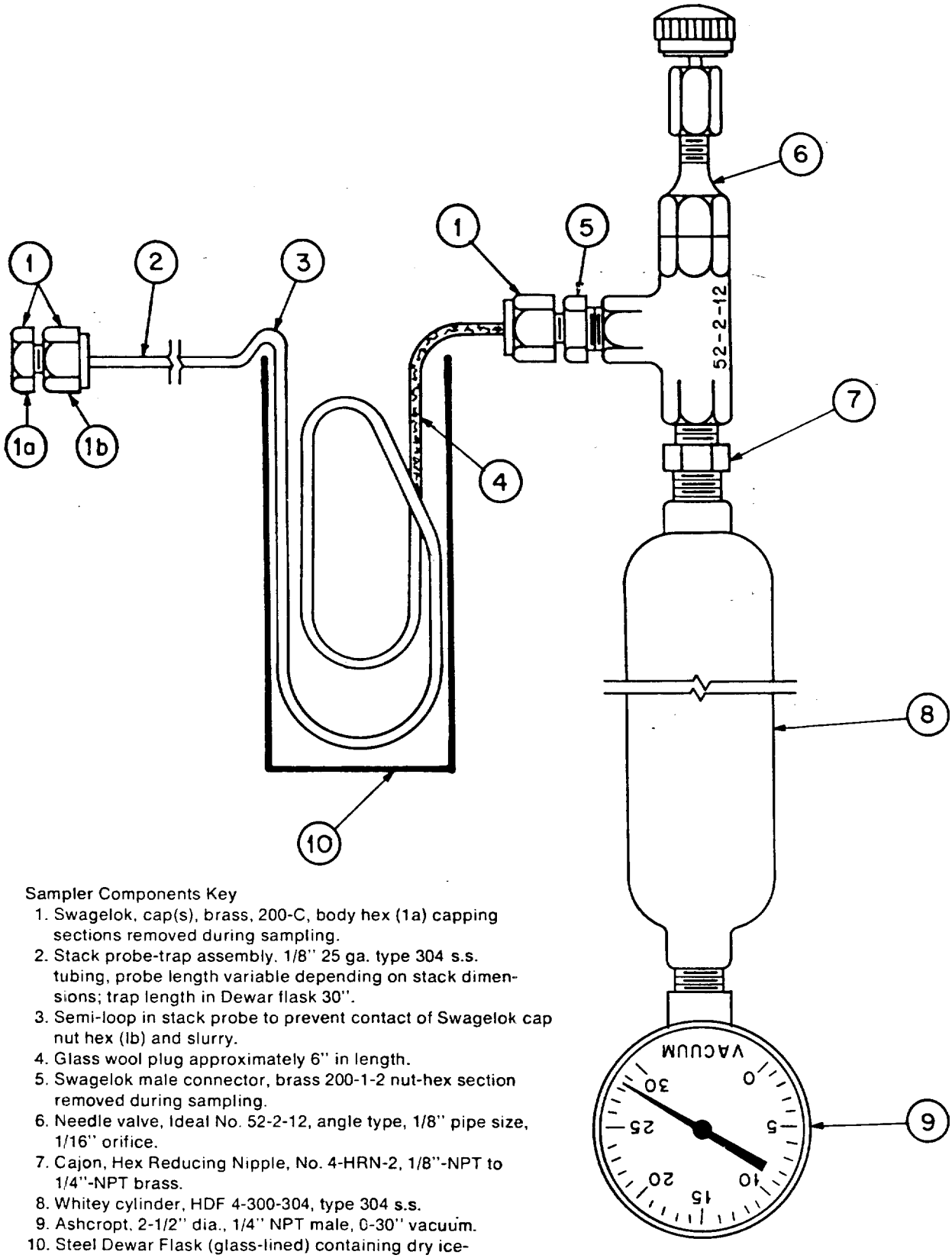

Sampler Components Key

1. Swagelok, cap(s), brass, 200-C, body hex (1a) capping sections removed during sampling.
2. Stack probe-trap assembly. 1/8" 25 ga. type 304 s.s. tubing, probe length variable depending on stack dimensions; trap length in Dewar flask 30".
3. Semi-loop in stack probe to prevent contact of Swagelok cap nut hex (lb) and slurry.
4. Glass wool plug approximately 6" in length.
5. Swagelok male connector, brass 200-1-2 nut-hex section removed during sampling.
6. Needle valve, Ideal No. 52-2-12, angle type, 1/8" pipe size, 1/16" orifice.
7. Cajon, Hex Reducing Nipple, No. 4-HRN-2, 1/8"-NPT to 1/4"-NPT brass.
8. Whitey cylinder, HDF 4-300-304, type 304 s.s.
9. Ashcropt, 2-1/2" dia., 1/4" NPT male, 0-30" vacuum.
10. Steel Dewar Flask (glass-lined) containing dry ice-trichloroethylene slurry.

Figure 9 — Final Integrated Grab Sampling Apparatus

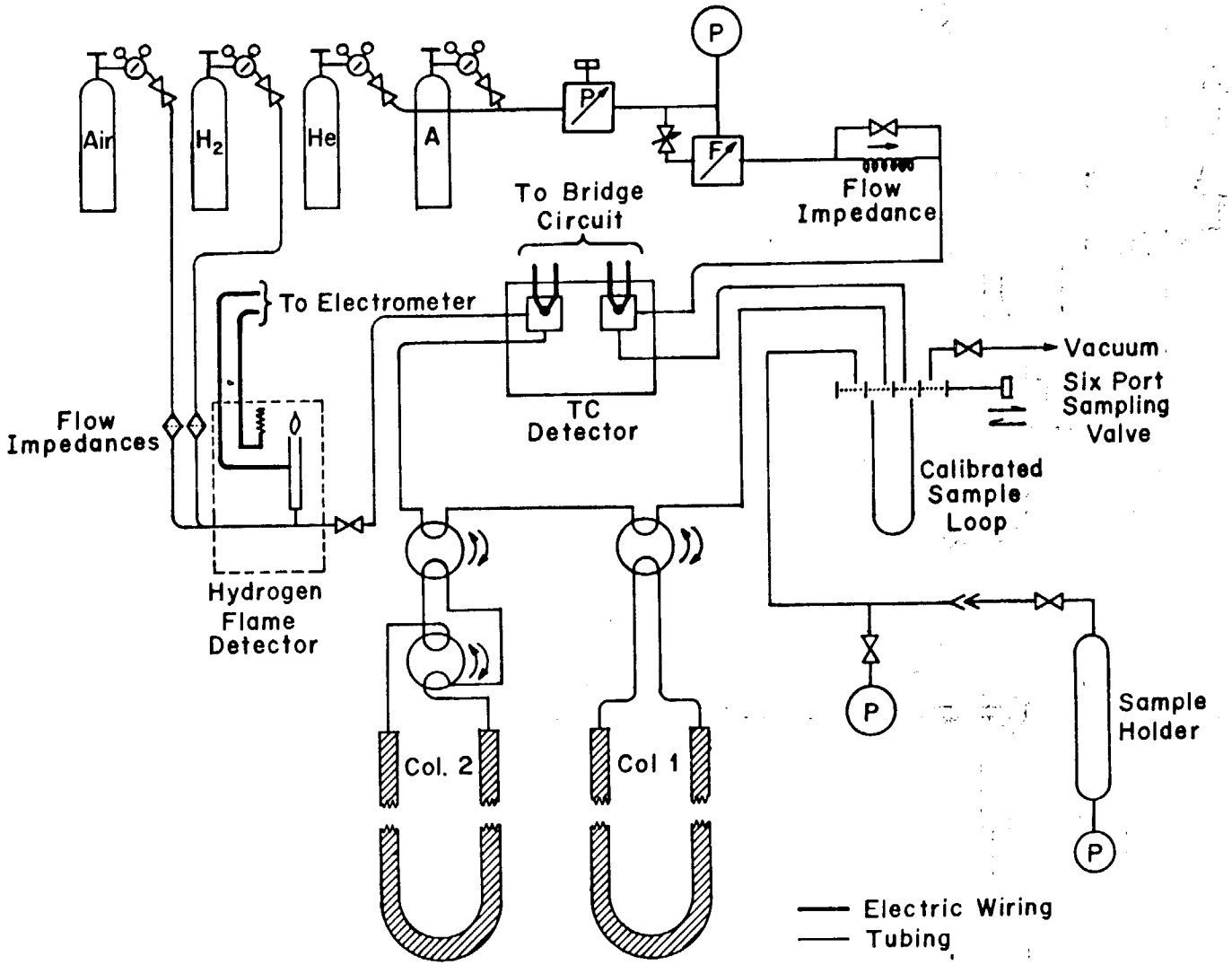

Figure 10 — Flow Diagram of a Modified Chromatographic Instrument

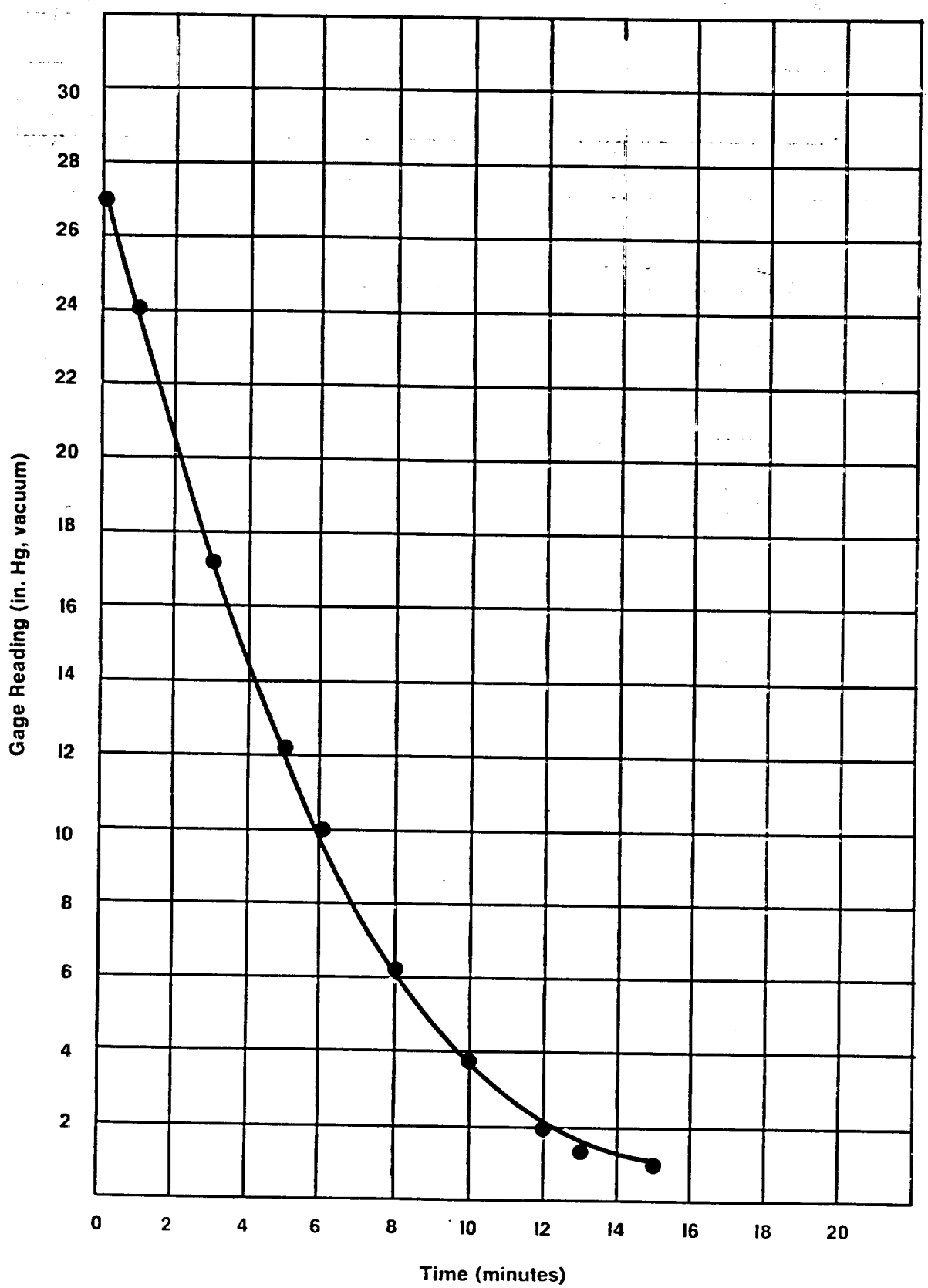

Figure 11 — Filling Curve for an Evacuated Cylinder Over a 15-Minute Sampling Period

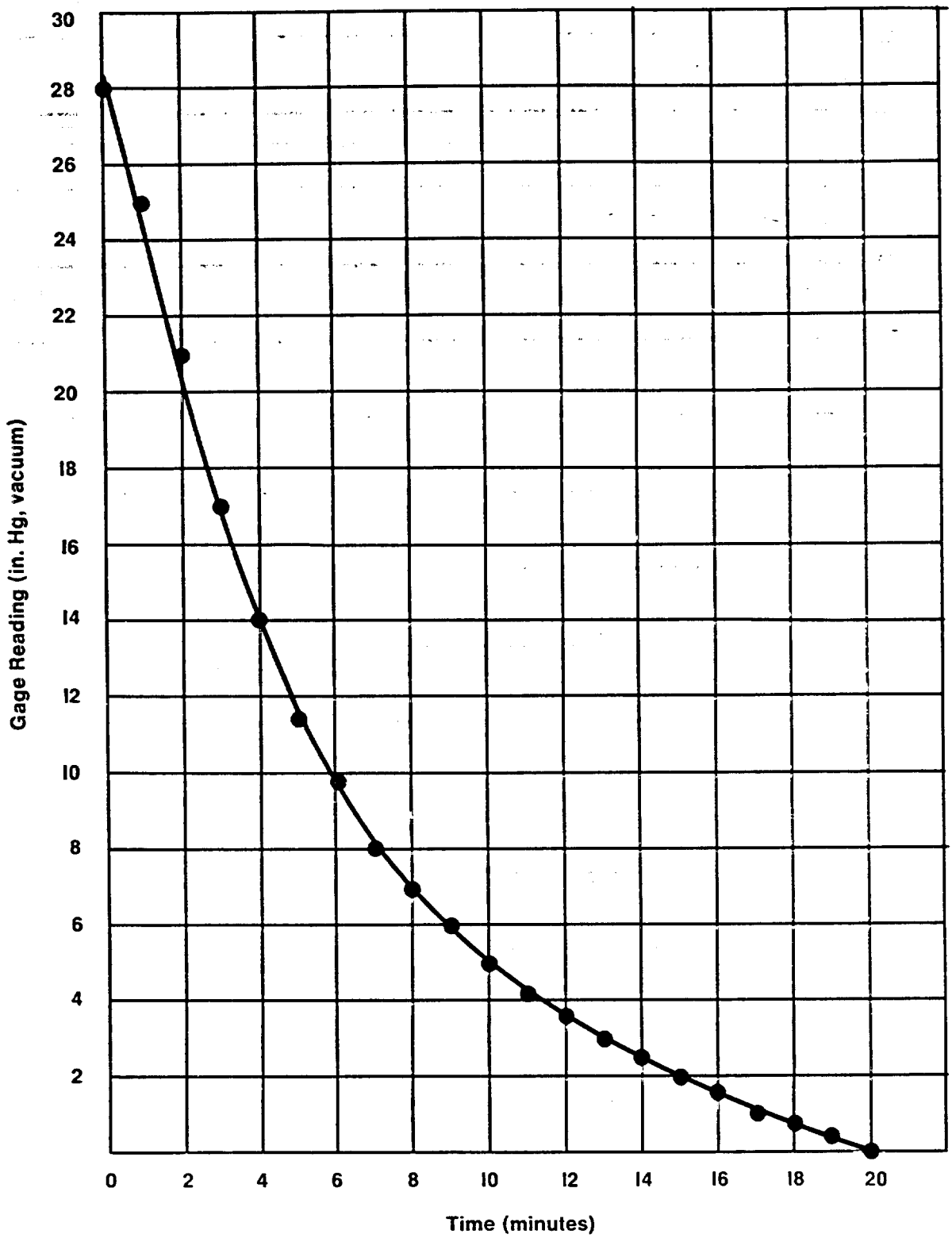

Figure 12 — Filling Curve for an Evacuated Cylinder Over a 20-Minute Sampling Period

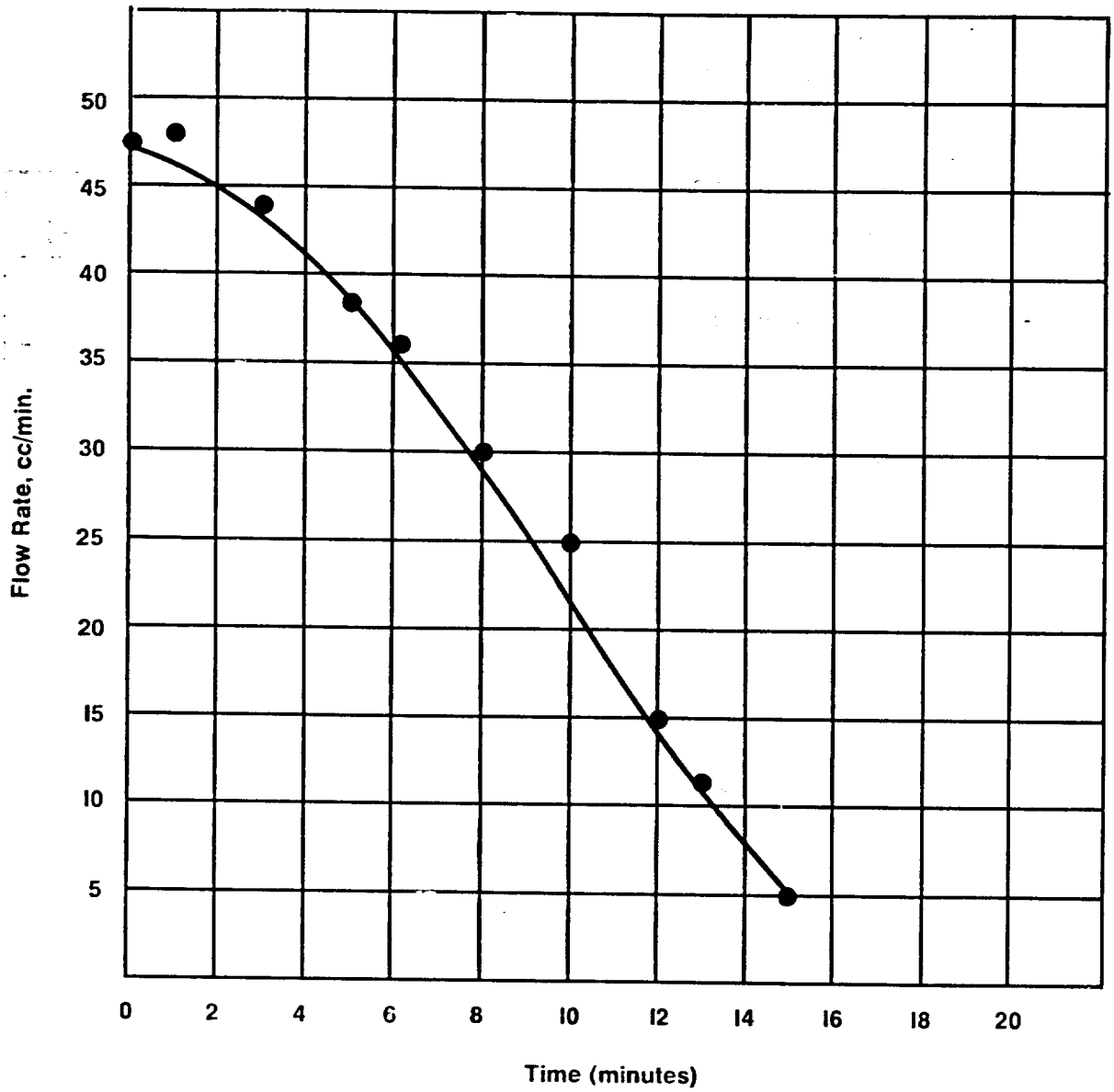

Figure 13 — Change in Flow Rate Over a 15-Minute Sampling Period

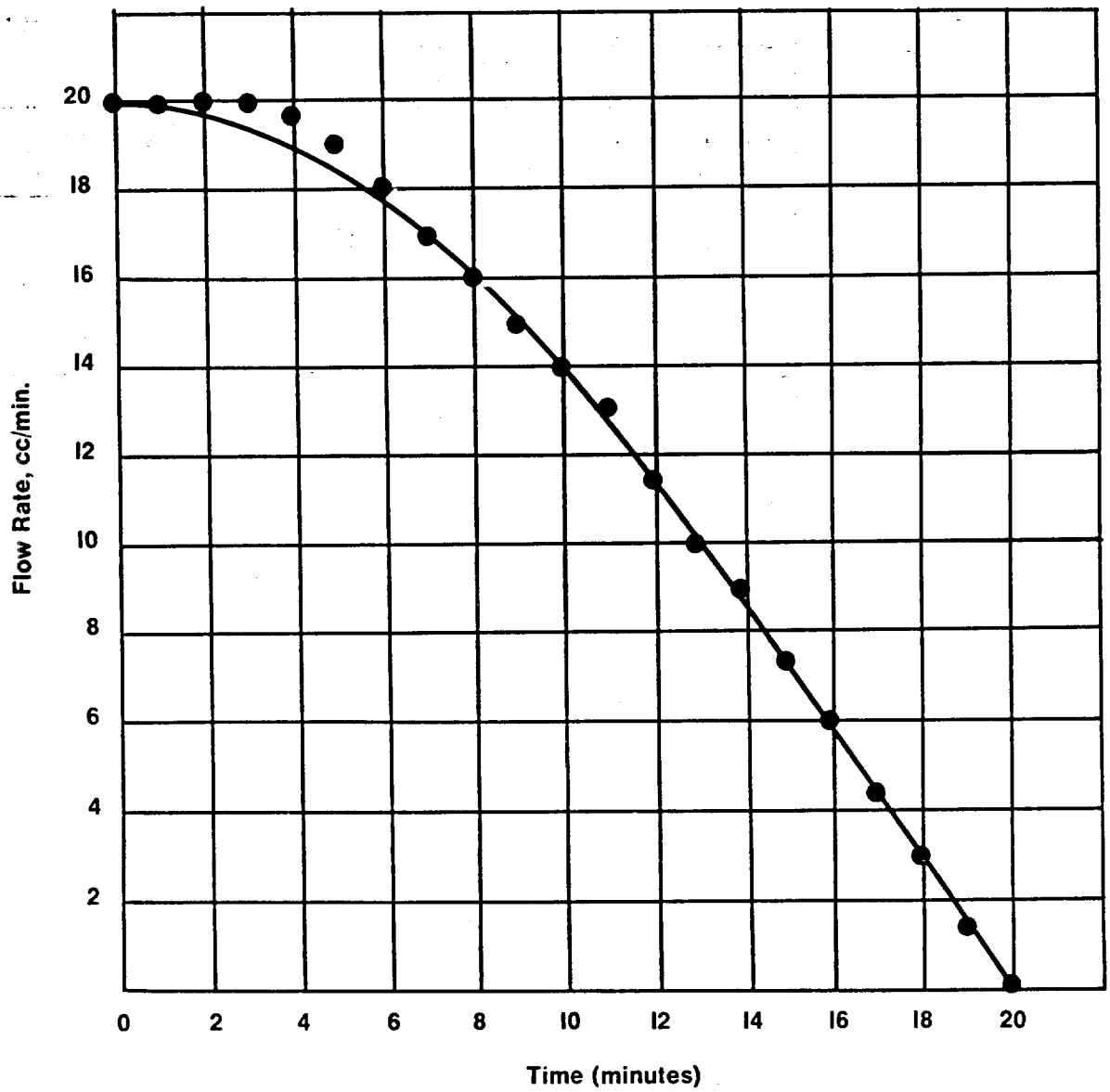

Figure 14 — Change in Flow Rate Over a 20-Minute Sampling Period

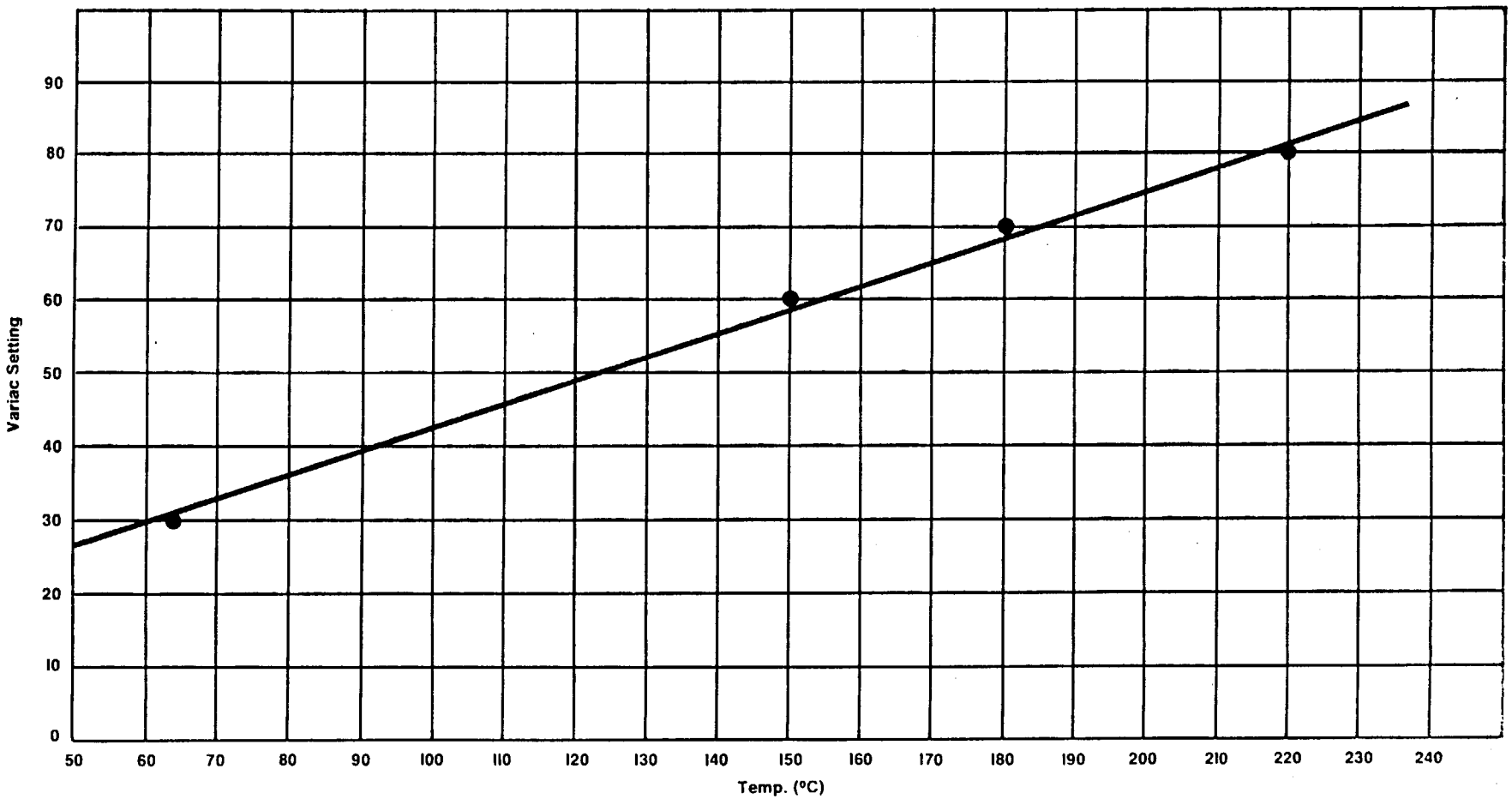

Figure 15 — Probe Temperature (°C) Versus Variac Setting (Static Room Conditions)

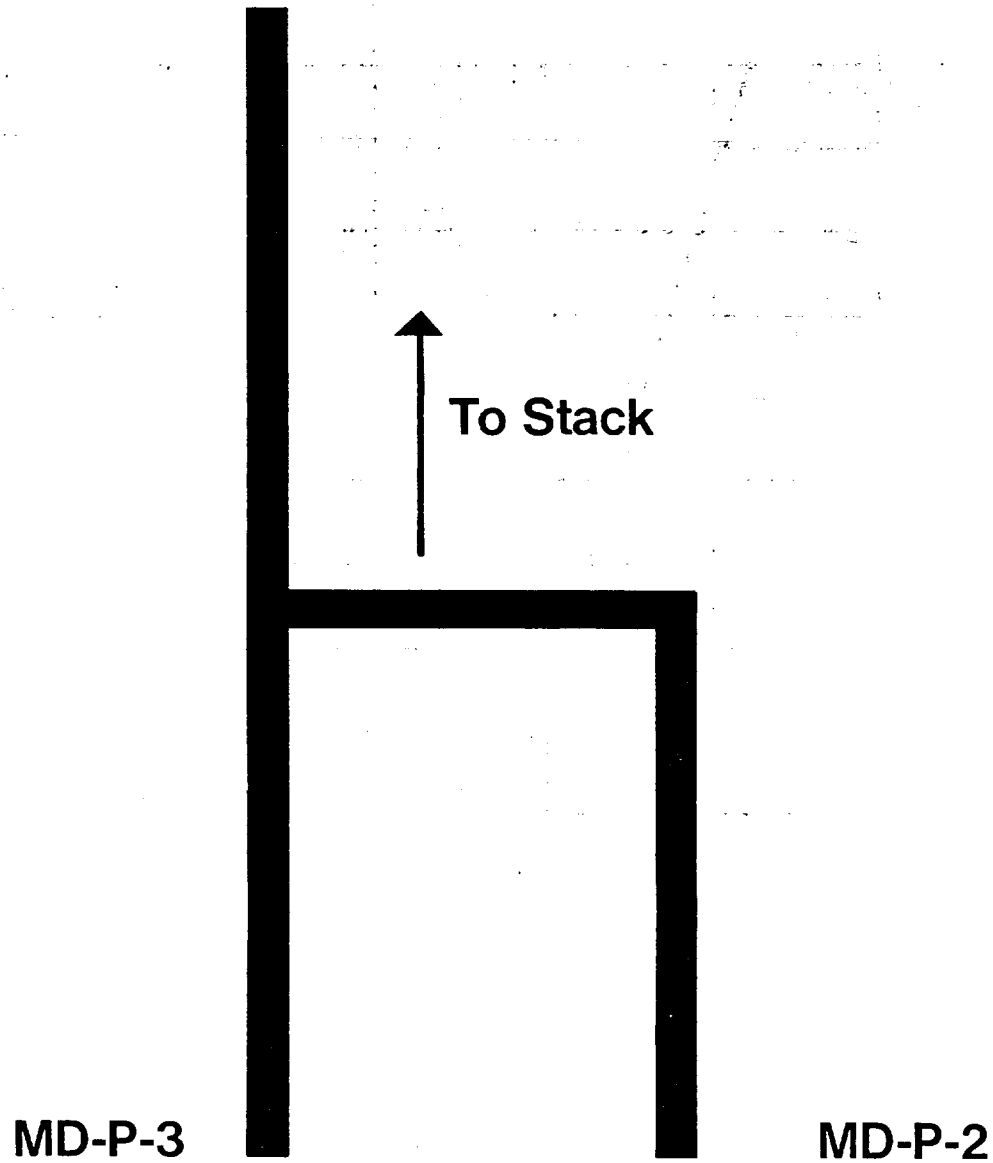

Figure 16 — Schematic Representation of Two Samples Collected Simultaneously Using a Single Probe

Data Sheet #1-ECD
(February 1, 1971)

Graphic Arts Technical Foundation
Environmental Control Division
Research Department
Pittsburgh, Pennsylvania 15213

I. *Source Location Data

1. Firm Name:_____ Phone_____
2. Address: _____
3. Representative(s) Contacted: _____
_____
_____

4. Plant Code No.:_____

II. Source and Sample Background Data

5. Date(s) of Test(s):_____
6. Process(es) and Basic Equipment (incl. throughput rates):_____
_____
_____
_____

7. Product(s): _____
8. Amounts Consumed (Monthly Av.)
   A. Paper or other substrates:_____
   B. Inks and Solvents:_____
9. Dryer or Oven Equipment:
   A. Type, manufacturer, model:_____
   B. Air Flows (rated), Temp.: _____
   C. Fuel or Heat Consumption:_____
   D. Comment:_____
   _____

10. Stack Geometry:
   A. No. (Single, manifolded)_____
   B. Cross-sectional area:_____
   C. Height above roof:_____
   D. Approx. running length:_____
   E. Comment:_____
   _____

11. APC Equipment (if any)_____
_____

12. General Comments:_____
_____

*Restricted use only.

Figure 17 — Source and Sample Background Data Form

Data Sheet #2-ECD
(February 1, 1971)

Test No.:_____
Plant Code No.: _____

Graphic Arts Technical Foundation
Environmental Control Division
Research Department
Pittsburgh, Pennsylvania 15213

Test Date:_____
Conditions:_____

Physical and Operational Plant Data

Test	Reading	Time	Comments
Atmospheric Press			
Temperature			
Relative Humidity			
Wind Speed			
Ambient Temp.			
db/wb ambient			
db/wb stack			
Flue Gas a) sampl. pt., b) stack exit			
APC - Inlet			
APC - Outlet			
Web			
Chill Exhaust			
Oven/Dryer (specify) - Bake Temp.			
Static Press Stack "H_2O (ΔH)			
Atmospheric "H_g			
Press Drop APC Fan			
Press Operating Speed/			
Web width/sheet dim			
# Printing Units/# Plate cyl.			
# Colors per side/coat thickness			
Type of Paper/Sheet			
Grade			
Wt. of Paper/Wt. of Coating			
Ink consumption (% coverage)			
Duration of Run			
Color of Ink/Coating			
Passes thru Drier			
Gas Meter Start			
Reading to Drier End			
Fan (H.P.)			
Solvent/Coating Usage Rate			

Figure 18 — Physical and Operational Plant Data Form

Data Sheet #2-ECD (Rev.)
(July 1, 1971)

Test No.:_____
Plant Code No.: _____

Graphic Arts Technical Foundation
Environmental Control Division
Research Department
Pittsburgh, Pennsylvania 15213

Test Date:_____
Conditions:_____

Physical and Operational Plant Data

Test	Readings			Comments	
Atmospheric Press					
Temperature					
Relative Humidity					
Wind Speed					
Ambient Temp.					
db/wb ambient					
db/wb stack					
Flue Gas a) sampl. pt., b) stack exit					
APC - Inlet					
APC - Outlet					
Web					
Chill Exhaust					
Oven/Dryer (specify) - Bake Temp.					
Static Press Stack "H_2O (ΔH)					
Atmospheric "H_g					
Press Drop APC Fan					
Press Operating Speed/					
Web width/sheet dim					
# Printing Units/# Plate cyl.					
# Colors per side/coat thickness					
Type of Paper/Sheet					
Grade					
Wt. of Paper/Wt. of Coating					
Ink consumption (% coverage)					
Duration of Run					
Color of Ink/Coating					
Passes thru Drier					
Gas Meter Start					
Reading to Drier End					
Fan (H.P.)					
Solvent/Coating Usage Rate					

Figure 18a — Revised Form (July 1, 1971)

Data Sheet #2-ECD (Rev.)
(November 1, 1971)

Test No._____
Plant Code No._____

Graphic Arts Technical Foundation
Environmental Control Division
Research Department
Pittsburgh, Pennsylvania 15213

Test Date:_____
Conditions_____
_____

Physical and Operational Plant Data

	Reading/Comments
Atmospheric pressure Temperature Relative humidity Wind speed	
Temperatures (°) Ambient db/wb ambient db/wb stack Flue gas - a) sampling point b) stack exit APC - Inlet APC - Outlet Web Chill Exhaust Oven/Dryer (specify) - bake temperature	
Static press stack "H_2O (ΔH) Atmospheric "Hg Press drop APC fan	
Press operating speed Web width/sheet dimensions No. printing units/No. plate cylinders No. colors per side/coat thickness	
Type of paper/sheet Grade Wt. of paper/wt. of coating	

Miscellaneous Data

Figure 18b — Revised Form (November 1, 1971)

Test No._____

Plant Code No._____

Graphic Arts Technical Foundation
Environmental Control Division
Research Department
Pittsburgh, Pennsylvania 15213

Data Sheet #2-ECD (Rev.)
(May 1, 1972)
Test Date:_____
Conditions:_____
_____

Physical and Operational Plant Data

	Reading/Comments
Ambient temperature	
db/wb ambient	
db/wb stack	
Flue gas - a) sampling point temp.	
b) stack exit temp.	
APC - Inlet temp.	
APC - Outlet temp.	
Web temp.	
Chill exhaust temp.	
Oven/Dryer (specify) - bake temp.	
Static press stack "H_2O (ΔH)	
Atmospheric "Hg	
Press operating speed	
Web width/sheet dimensions	
No. printing units/No. plate cylinders	
No. colors per side/coating thickness	
Est. coating/ink usage rate	
Type of paper/sheet	
Wt. of paper/wt. of coating	

Control Equipment Data

Figure 18c — Revised Form (May 1, 1972)

Data Sheet #3-ECD
(February 1, 1971)

Graphic Arts Technical Foundation
Environmental Control Division
Research Department
Pittsburgh, Pennsylvania 15213

Plant Code No._____ Date:_____

Effluent Sampling Data

Sample #	Time	Period	Collection Point	Probe Length	Variac Setting

Figure 19 — Effluent Sampling Data Form

Data Sheet #3-ECD (Rev)
(July 1, 1971)

Graphic Arts Technical Foundation
Environmental Control Division
Research Department
Pittsburgh, Pennsylvania 15213

Plant Code No._____ Date:_____

Effluent Sampling Data

Sample #	Time	Period	Probe Configuration	Comments

Figure 19a — Revised Form (July 1, 1971)

Graphic Arts Technical Foundation
Environmental Control Division
Research Department

Data Sheet #4-ECD
(February 1, 1971)

Date:_____

Time Period:_____

Observer:_____

Plant Code No.:_____

Visible Emissions Evaluation

Observation Point_____

_____

Stack - Distance From_____Height_____

Wind - Speed_____Direction_____

Sky Condition_____

_____

Fuel_____

Observation began____Ended_____

Density Smoke Tabulation

Units (Unit No.) = Equiv. #1 Units

_____Units No. 0_____

_____Units No. 1/2_____

_____Units No. 1_____

_____Units No. 1-1/2_____

_____Units No. 2_____

_____Units No. 2-1/2_____

_____Units No. 3_____

_____Units No. 3-1/2_____

_____Units No. 4_____

_____Units No. 4-1/2_____

_____Units No. 5_____

_____

_____Units_____Equiv.Units

Equiv. Units x 20% =
Units

_____%Smoke Desnity

Remarks:_____

_____

_____

_____

	0	15	30	45		0	15	30	45
0					30				
1					31				
2					32				
3					33				
4					34				
5					35				
6					36				
7					37				
8					38				
9					39				
10					40				
11					41				
12					42				
13					43				
14					44				
15					45				
16					46				
17					47				
18					48				
19					49				
20					50				
21					51				
22					52				
23					53				
24					54				
25					55				
26					56				
27					57				
28					58				
29					59				

Figure 20 — Visible Emissions Evaluation Data Form

Test No.:_____
Plant Code No.:_____
Sampling Location
_____
_____

Graphic Arts Technical Foundation
Environmental Control Division
Research Department
Pittsburgh, Pennsylvania 15213

Data Sheet #5-ECD
(February 1, 1971)
Date:_____
GATF Personnel:
_____
_____

Gas Velocity Data

Point No.	Time:			Time:		
	Vel. Head in. H_2O (h)	Temp °F	Velocity ft/sec	Vel. Head in. H_2O (h)	Temp °F	Velocity ft/sec
Av.						

A. Av. velocity (traverse) ft/sec _____
B. Av. velocity (ref. pt.) ft/sec _____
C. Flue factor A/B _____
D. Pitot Tube correction factor(if any)_____
E. Gas density factory(ref. to air)_____
F. Corrected velocity B x C x D x E ft/sec_____
G. Area of flue, sq. ft. _____
H. Av. flue temp. °F _____
I. Flow rate @ stack cond.
F x G x 60, acfm _____
J. P_s = _____
K. Corrected to std. cond.

$$\text{Flow rate} = \frac{520 \times I \times P_s}{H + 460 \times 29.92}, \text{ scfm}$$ _____

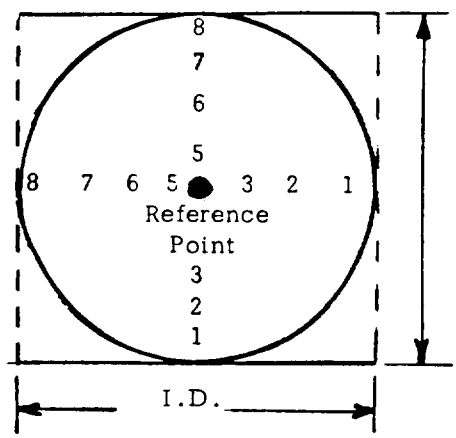

Static (ΔH) "H_2O = _____
$P_g = -\Delta H/13.6$ = _____
P_{atm} "Hg = _____
$P_s = P_{atm} - P_g$ = _____

Figure 21 — Gas Velocity Data Form

Test No.:_____
Plant Code No.:_____
Sampling Location
_____
_____

Graphic Arts Technical Foundation
Environmental Control Division
Research Department
Pittsburgh, Pennsylvania 15213

Data Sheet #5-ECD (Rev.)
(May 1, 1972)
Date:_____
GATF Personnel:
_____
_____

Gas Velocity Data

Point No.	Time:			Point No.	Time:		
	Vel. Head in. H_2O (h)	Temp °F	Velocity ft/sec		Vel. Head in. H_2O (h)	Temp °F	Velocity ft/sec
Av.				Av.			

A. Av. velocity (traverse) ft/sec _____
B. Av. velocity (ref. pt.) ft/sec _____
C. Flue factor A/B _____
D. Pitot Tube correction factor(if any)_____
E. Gas density factory(ref. to air)_____
F. Corrected velocity B x C x D x E ft/sec_____
G. Area of flue, sq. ft. _____
H. Av. flue temp. °F _____
I. Flow rate @ stack cond.
F x G x 60, acfm _____
J. P_s = _____
K. Corrected to std. cond.
Flow rate = $\frac{520 \times I \times P_s}{(H + 460) \times 29.92}$, scfm_____

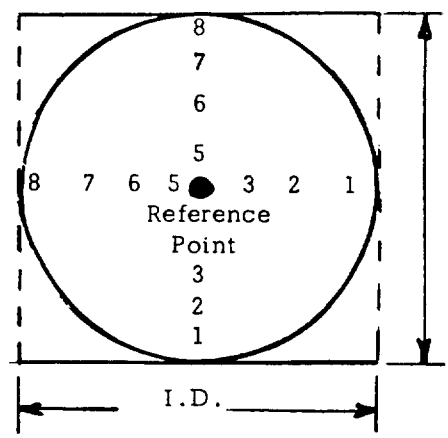

Static (ΔH) "H_2O = _____
P_g = $\Delta H/13.6$ = _____
P_{atm} "Hg = _____
$P_s = P_{atm} - P_g$ = _____

Figure 21a — Revised Form (May I, 1972)

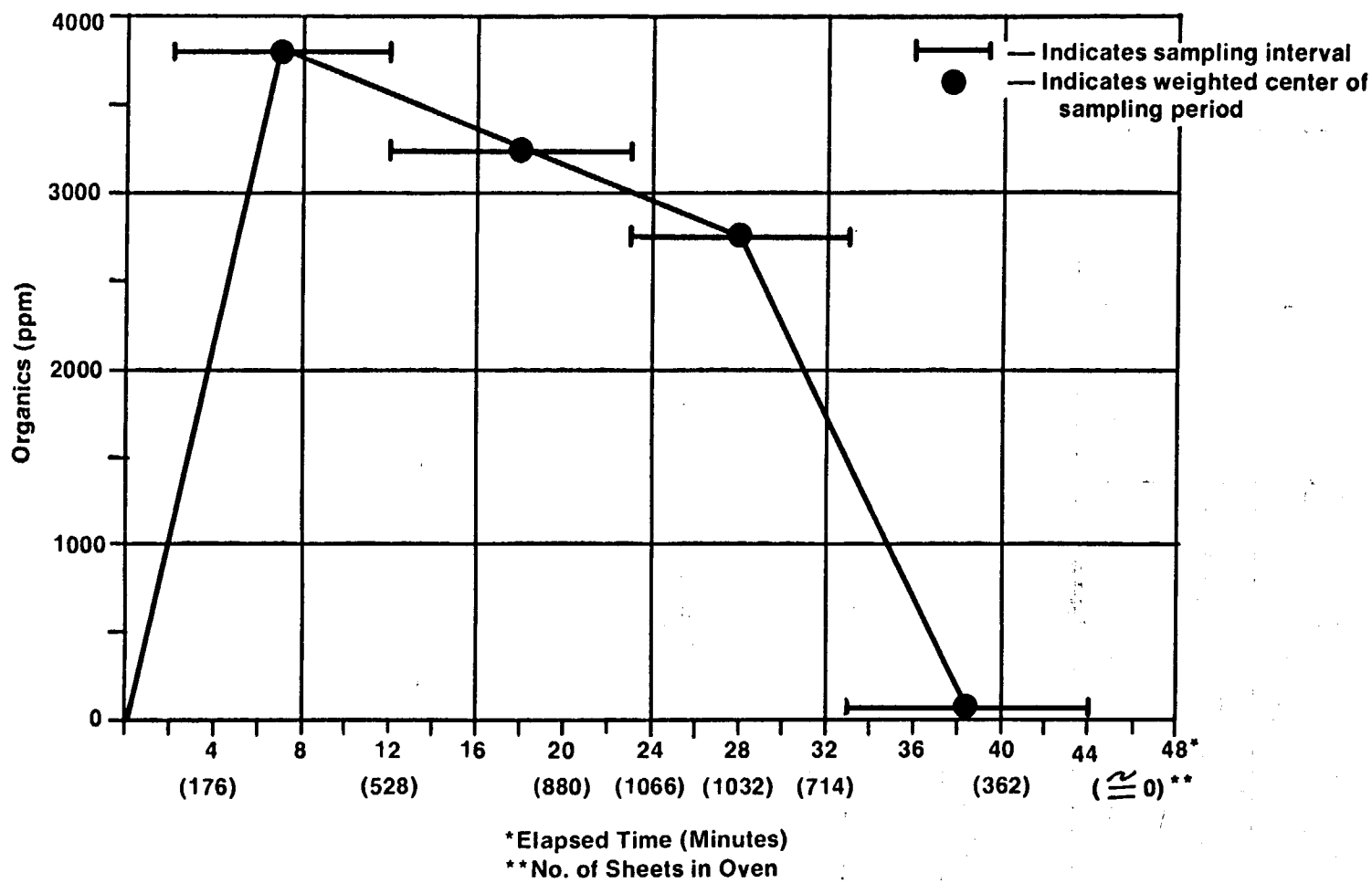

Figure 28 — Organics Emission with Time and No. of Sheets in Oven

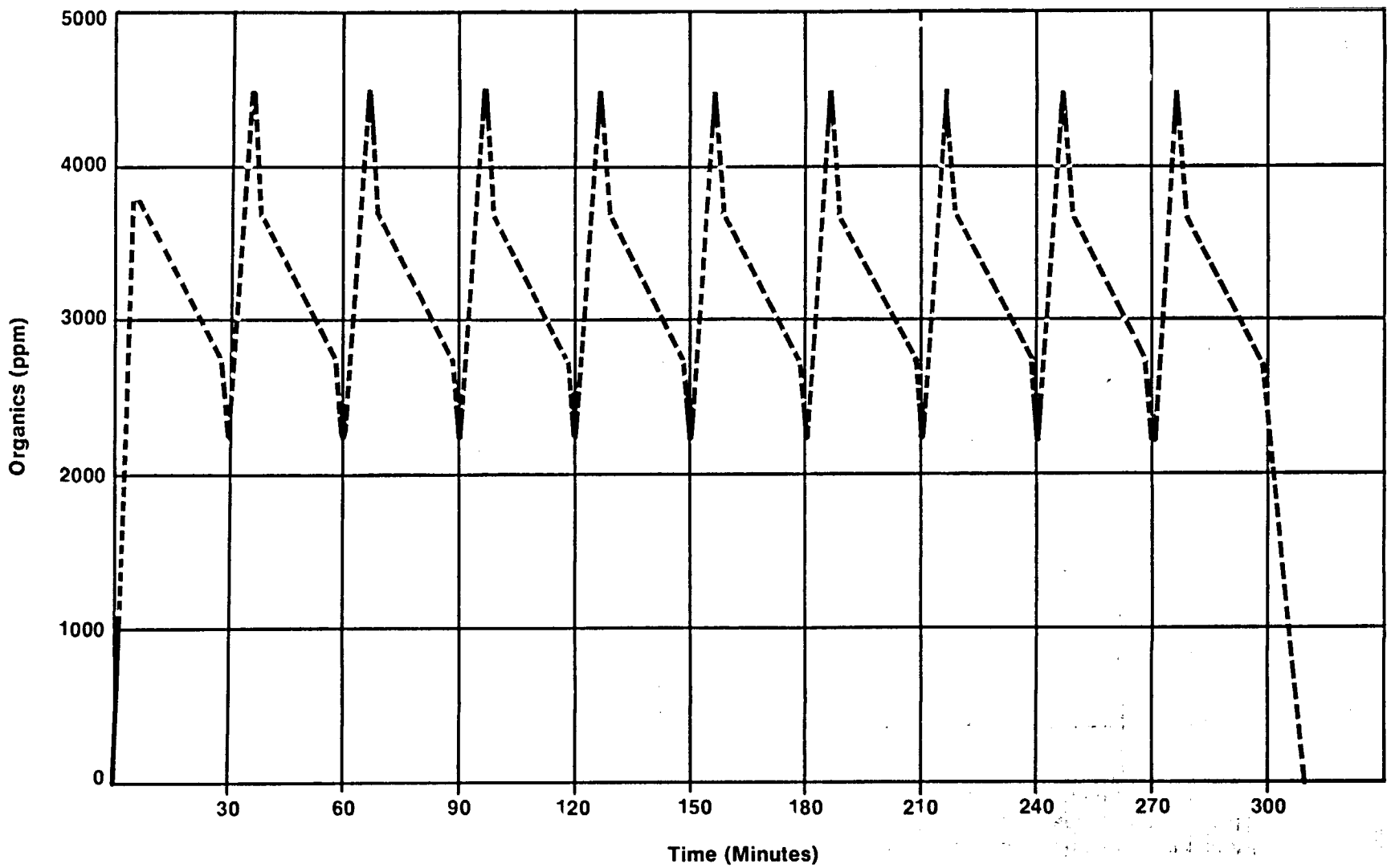

Figure 29 — Projected Organic Emission Rate for Extended Period of Time

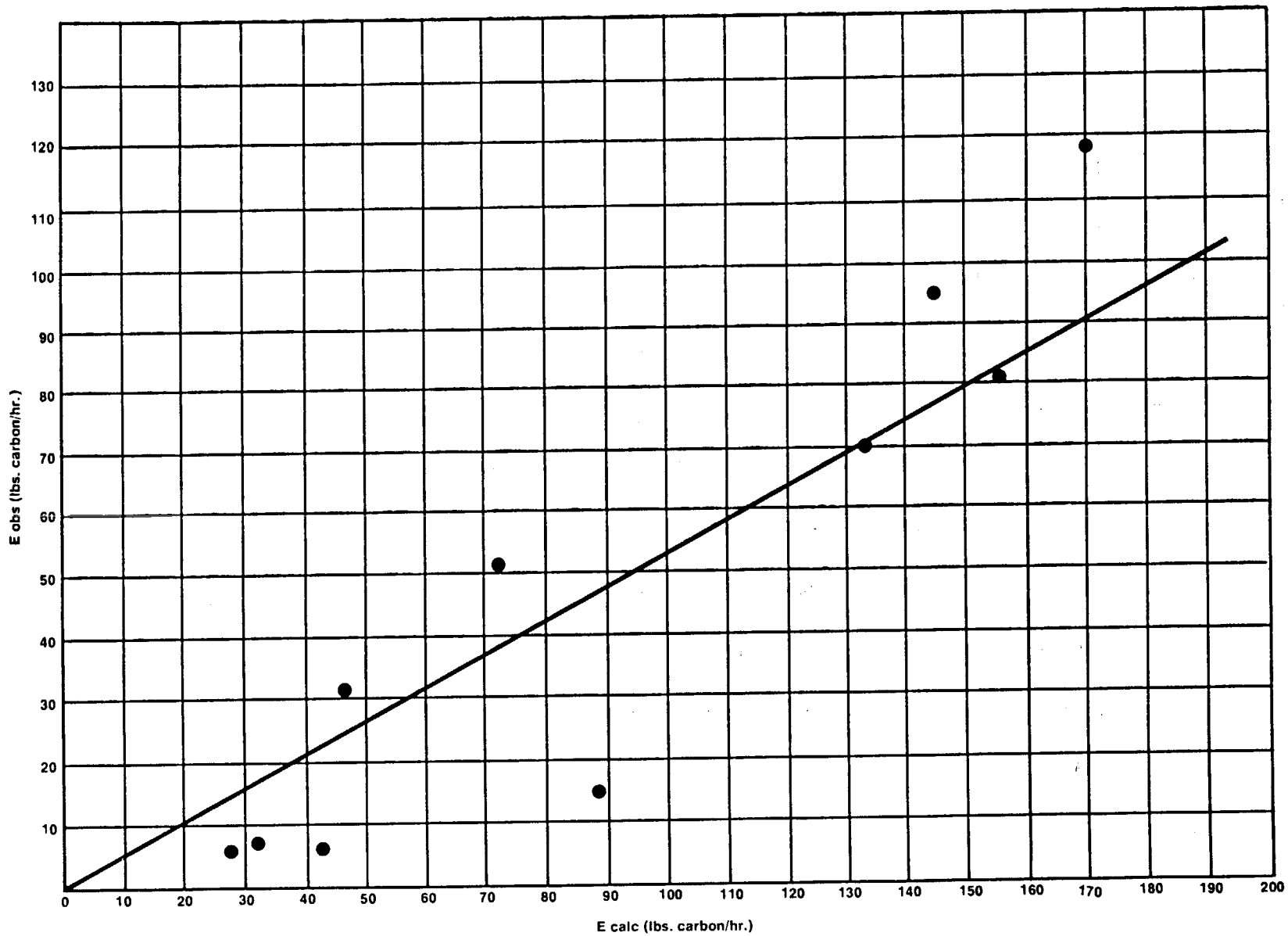

Figure 33 — Variation of Observed Emission Rate (E obs) with Calculated Emission Rate (E calc) from Older Metal Decorating Ovens

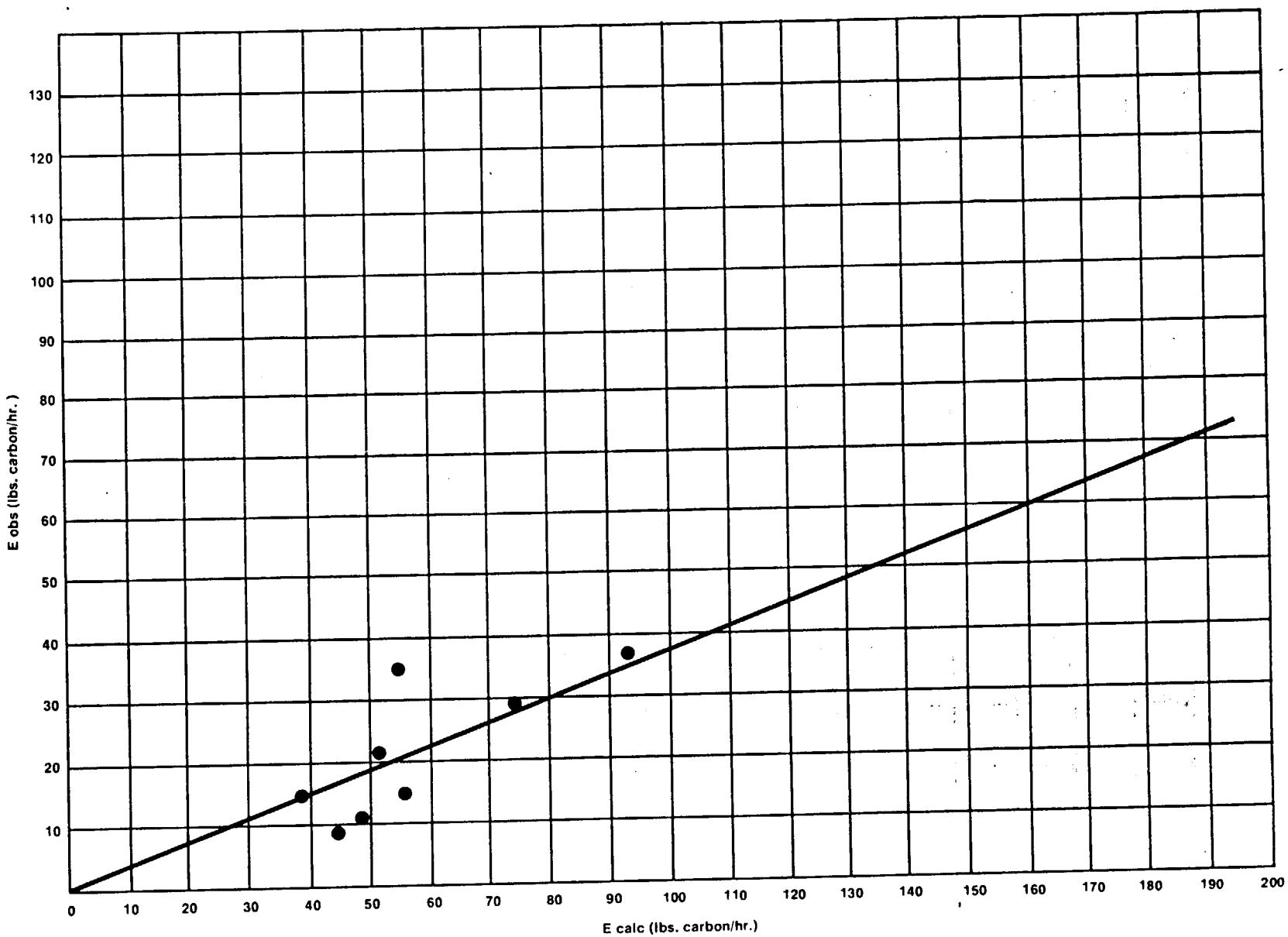

Figure 34 — Variation of Observed Emission Rate (E obs) with Calculated Emission Rate (E calc) from Newer Metal Decorating Ovens

APPENDIX C
Tables

TABLE 1

SAMPLING METHODS FOR EFFLUENTS FROM PRINTING & METAL DECORATING PLANTS

Method	Period (min)	Probe	Trap	Sampler	Meter	Regulator	Pump
L.A. APCD	20	s.s. (tape-heated)	s.s., coiled U dry ice-Methyl Cellosolve	2-l flask glass evac.	vac. gage, monitor rate	needle valve (trap - flask)	vac.
Cal-Colonial	1 (125 ml)	s.s. (1/8" x 12") w/fittings	dry ice	gas bottle (125 ml)	vac. gage monitor rate	needle valve	vac.
Poly-technic	30	s.s. (tape-heated)	scrubber (particulates), ice in series	4-250 ml scrubbers in CCl_4	dry gas meter	flow meter & vac. gage	vac.
Phoenix Chem. Lab.	10-30	"	none	100 ml tube (Teflon stop-cocks)	none	flow meter	vac.
Illinois Inst. Tech.	20-45	"	U-tube, dry ice	Apiezon L-Teflon powder (fluidized bed)	vac. gage	flow meter (0.5-0.75 l/sec)	air blower (reversible)
Truesdail	20	"	double U, dry ice-isopropanol	gas bottle (std. vol)	vac. gage	needle valve	vac.
S.F.B.A. APCD	15	s.s. or glass	silica gel (2-cartridges)	s.s. tank (5 gal)	vac. gage	flow meter 0.5 cfm	vac.

s.s.- stainless steel

TABLE 2

INSTRUMENTAL METHODS OF ANALYSIS CURRENTLY IN USE THROUGHOUT THE GRAPHIC ARTS INDUSTRY

Method Used By	Primary Instrument(s)	Auxiliaries
1. Los Angeles APCD	Gas chromatograph w/non-dispersive infrared analyzer	
2. Honeywell, Inc.	Similar to L.A. APCD	
3. Truesdail Labs.	Similar to L.A. APCD	
4. Cal-Colonial Chemsolve	Gas chromatograph w/flame ionization detector cell	
5. Continental Can Co., Inc.	Total hydrocarbon analyzer	NDIR instrument
6. Polytechnic, Inc.	IR spectrophotometer	
7. Hirt Combustion Engineers	Total combustibles analyzer	Ultra-violet analyzer
8. IIT Research Institute	Gas chromatograph w/sample injection system	
9. San Francisco Bay Area APCD	Gas chromatograph w/flame ionization and thermal conductivity cells	IR Spectrophotometer
10. Ambassador College Press	Gas chromatograph	Hot-wire detector Mass integral detector

TABLE 12
Variables Affecting Efficiency of GATF's Trap, Organics Collection, Web Offset Samples

Trap Organics Collection Efficiency (%)	Total Organics (ppm)	Low Boilers (%)	High Boilers (%)	Sampling Time (min)
0	2*	100	0	20
0	14*	100	0	15
0	18*	100	0	15
0	23*	100	0	15
0	29*	100	0	15
0	36*	100	0	15
0	48*	100	0	15
3	117*	100	0	15
9	57*	96	4	15
11	18*	89	11	15
12	58*	90	10	15
18	57*	88	12	15
19	95*	86	14	15
21	29*	83	17	15
22	102*	98	2	15
29	7*	100	0	20
33	9*	89	11	20
40	116*	66	34	15
59	261*	55	45	20
67	6*	83	17	20
75	4*	50	50	20
83	6*	50	50	20
85	47	--	--	15
88	98*	28	72	20
82	455*	19	81	20
91	68	--	--	10
93	15*	20	80	20
93	86	--	--	15
93	88	3	97	10
93	151*	80	20	15
94	51	--	--	10
95	19	--	--	20
95	187	56	44	20
96	114	3	97	10
96	246	13	87	20
96	309	10	90	20
97	30	27	73	20
97	180	--	--	15

Table 12 continued

Trap Organics Collection Efficiency (%)	Total Organics (ppm)	Low Boilers (%)	High Boilers (%)	Sampling Time (min)
97	183	--	--	15
97	255	11	89	20
97	284	6	94	20
97	327	--	--	20
97	1646	--	--	22
97	2608	13	87	15
98	45	--	--	20
98	135*	7	93	20
98	194	--	--	20
98	203	--	--	20
98	297	16	84	20
98	354	--	--	20
98	409	--	--	20
98	433	--	--	20
98	524	--	--	30
98	1589	--	--	20
98	1747	--	--	20
98	1919	15	85	20
98	2332	15	85	20
98	2532	14	86	20
98	2641	18	82	15
99	215	6	94	20
99	226	16	84	20
99	297	41	59	20
99	353	33	67	20
99	418	--	--	20
99	624	--	--	20
99	650	--	--	20
99	686	--	--	15
99	710	--	--	30
99	748	--	--	15
99	759	--	--	15
99	780	--	--	15
99	868	--	--	20
99	1050	--	--	23
99	1077	--	--	23
99	1111	--	--	30
99	1346	--	--	20
99	1904	--	--	20
99	1920	7	93	20
99	2275	15	85	15

Table 12 continued

Trap Organics Collection Efficiency (%)	Total Organics (ppm)	Low Boilers (%)	High Boilers (%)	Sampling Time (min)
99	2410	--	--	20
99	2822	--	--	30
99	5977	1	99	22
100	4*	75	25	20
100	18*	6	94	20
100	605	--	--	30
100	783	--	--	20
100	811	--	--	30
100	916	--	--	30
100	2360	--	--	20
100	4767	--	--	30

*Outlet to emission control units

TABLE 13
Variables Affecting Efficiency of GATF's Trap,
Organics Collection, Metal Decorating Samples

Trap Organics Collection Efficiency (%)	Total Organics (ppm)	Low Boilers (%)	High Boilers (%)	Sampling Time (min)
0	5*	100	0	15
0	7*	100	0	20
0	15*	100	0	15
0	20*	100	0	20
0	25*	100	0	20
0	30*	100	0	20
0	35*	100	0	20
0	171*	100	0	20
2	102*	100	0	20
3	32*	100	0	20
4	46*	98	2	20
4	81*	96	4	20
4	112*	96	4	20
9	188*	96	4	20
9	205*	97	3	20
10	151*	91	9	20
14	147*	89	11	20
19	43*	100	0	20
20	44*	100	0	20
24	130*	83	17	15
25	230*	97	3	20
27	179*	77	23	20
28	232*	94	6	15
34	149*	90	10	20
41	162	94	6	15
43	87	89	11	15
45	126*	87	13	15
47	175*	53	47	20
48	32	94	6	10
49	156*	60	40	20
58	133	76	24	15
58	174*	55	45	20
60	440*	96	4	15
69	64	84	16	15
69	180*	96	4	20
69	394	91	9	10
73	97	67	33	15

Table 13 continued

Trap Organics Collection Efficiency (%)	Total Organics (ppm)	Low Boilers (%)	High Boilers (%)	Sampling Time (min)
73	445	94	6	10
73	898*	34	66	15
77	884*	95	5	15
78	553	44	56	10
80	61	72	28	11
87	55	64	36	15
91	924*	90	10	20
92	96	96	4	15
96	77*	4	96	15
98	1442	77	23	15
98	1491	97	3	15
98	2082	77	23	15
98	2140	77	23	15
98	8177	96	4	15
98	9124	94	6	15
99	1524	61	39	15
99	1769	69	31	15
99	1808	100	0	15
99	1944	99	1	15
99	2185	83	17	15
99	2750	98	2	15
99	2894	95	5	15
99	3474	82	18	15
99	5447	96	4	15
99	5573	96	4	15
100	1*	0	100	15
100	5*	100	0	20
100	7*	0	100	15
100	65	77	23	15
100	801	44	56	20
100	920	61	39	20
100	2669	87	13	20
100	2773	93	7	10
100	2860	73	27	15
100	3076	73	27	15
100	3244	93	7	11
100	3436	90	10	20
100	3871	92	8	10
100	4206	98	2	15
100	4288	98	2	15

Table 13 continued

Trap Organics Collection Efficiency (%)	Total Organics (ppm)	Low Boilers (%)	High Boilers (%)	Sampling Time (min)
100	4600	99	1	15
100	4917	96	4	15
100	4949	92	8	15
100	5164	96	4	20
100	5756	97	3	15
100	5780	97	3	15
100	6052	94	6	15
100	6095	97	3	15
100	6785	96	4	15
100	6997	99	1	15
100	7408	97	3	15
100	8295	99	1	15
100	8326	97	3	20
100	9137	99	1	15
100	10347	98	2	20
100	13323	98	2	20
100	13574	98	2	20
100	13773	98	2	15
100	14462	99	1	20
100	15574	98	2	20
100	16534	16	84	20
100	20045	97	3	15
100	20363	99	1	15
100	21405	99	1	15
100	21684	99	1	15

*Outlet to emission control units

TABLE 14

Test Program for Web Offset Publication Printing
to be Performed Under Task 3 of Contract No. 68-02-0001

Process variable to be evaluated	*Un-Controlled Source		**Controlled Source	
	No. of Samples	Comment	No. of Samples	Comment
1. Dryer only	4	Two sets of samples to obtain background emission due to dryer operation only. (A set shall be defined as 2 samples.)	None	If necessary, samples could be obtained, however, none are anticipated.
2. Paper only (no printing)	4	Two sets of samples to determine paper contribution. One set for coated and one set for uncoated paper stock.	None	Dependent on outcome as well as obtainment of samples, experimentation due to paper could be conducted, however, no samples are anticipated.
3. Ink Usage Rate 2-color process	4	One set of samples for each type of paper stock studied.	8	Inlet and outlet sets taken to determine control system efficiency for each type of paper stock studied.
4-color process	4	One set of samples for each type of paper stock studied.	8	Same as above.
4. Press speed	8	One set of samples could be obtained for each press speed (i.e., 400, 600, 800, 1000) or assuming only two press speeds then 1 set of samples could be obtained for each type of paper stock.		Depending on need to sample process variable such as dryer only and paper only; four samples (1 set on inlet and 1 on the outlet) could be obtained for selected press speed and paper stock.

*Inclusive of two drying systems to be evaluated, namely direct flame hot air and high velocity hot air.

**Inclusive of two control systems to be evaluated, namely thermal (direct flame) and catalytic incineration.

TABLE 15

Test Program for Metal Decorating to be Performed
Under Task 4 of Contract No. 68-02-0001

Process Variable to be evaluated	*Uncontrolled Source		**Controlled Source	
	No. of Samples	Comment	No. of Samples	Comment
1. Oven only	4	Two sets of samples to obtain background emission due to oven operation only. (A set shall be defined as 2 samples.)	None	If necessary, samples could be obtained, however, none are anticipated.
2. Lithography only (no coatings applied)	8	Two sets of samples to determine printing contribution (one or two-color work). Two sets of samples to determine printing and subsequent trailing coater (varnish application).	None	Unless determined otherwise, efficiency samples will not be conducted on the lithography phase of metal decorating.
3. Coating weights A. Light (2-10 mg/4 sq in)	4	Two sets of samples to determine emission due to this type of coating application.	8	Inlet and outlet sets taken to determine control system efficiency for each type of coating weight studied (not to exceed 2 types).
B. Medium (10-30 mg/4 sq in)	4	Two sets of samples to determine emission due to this type of coating application.	8	Inlet and outlet sets taken to determine control system efficiency for each type of coating weight studied (not to exceed 2 types).
C. Heavy (30-50 mg/4 sq in)	4	Two sets of samples to determine emission due to this type of coating application.	8	Inlet and outlet sets taken to determine control system efficiency for each type of coating weight studied (not to exceed 2 types).

*Inclusive of two plants so as to be able to evaluate as many process variables as possible.

**Inclusive of two control systems to be evaluated, namely thermal (direct flame) and catalytic incineration.

APPENDIX D
Data Sheets
Web Offset Plants

Data Sheet #1-ECD

Graphic Arts Technical Foundation
Environmental Control Division
Research Department
Pittsburgh, Pennsylvania 15213

I. *Source Location Data

1. Firm Name: _____ Phone _____
2. Address: _____
3. Representative(s) Contacted: _____
4. Plant Code No.: 1-W.O.

II. Source and Sample Background Data

5. Date(s) of Test(s): March 16, 17, 18, 1971
6. Process(es) and Basic Equipment (incl. throughput rates): 6-unit web offset American Type Foundry press, perfecting type, 17,000 impressions per hour, 580 ft/min., uses a hot air (thermo air jet) B. Offen dryer
7. Product(s): Advertising circulars
8. Amounts Consumed (Monthly Av.)
   A. Paper or other substrates: Westvaco, Marva web gloss C25 white 55# wt.
   B. Inks and Solvents: 4 to 5 lb ink/hr (5 color)
9. Dryer or Oven Equipment:
   A. Type, manufacturer, model: B. Offen & Co. Thermo Air Jet
   B. Air Flows (rated), Temp.: N/A, temp. approx. 370°F
   C. Fuel or Heat Consumption: Natural gas
   D. Comment: No separate gas metering
10. Stack Geometry:
   A. No. (Single, manifolded) Single stack - 30" diameter
   B. Cross-sectional area: 4.9 sq ft
   C. Height above roof: 4 ft
   D. Approx. running length: 25 ft
   E. Comment: Stack extends straight up from dryer through roof, bends over to horizontal for 20 ft, vertical discharge
11. APC Equipment (if any) None
12. General Comments: Sampling position is ideal considering configuration of dryer exhaust ducting.

*Restricted use only.

Data Sheet #2-ECD

Graphic Arts Technical Foundation
Environmental Control Division
Research Department
Pittsburgh, Pennsylvania 15213

Test No.: 1
Plant Code No.: 1-W.O.

Test Date: March 16, 1971
Conditions: 5-color
1-Web
perfecting

Physical and Operational Plant Data

Test		Reading	Time	Comments
Atmospheric Press	Plant area	29.20	1:00 pm	Overcast
Temperature	"	72°F		Intermittent
Relative Humidity	"	50%		snow flurries
Wind Speed		Westerly 15-20 mph		
Ambient Temp.		41°F	1:40 pm	
db/wb ambient		50/40		
db/wb stack		91/76		
Flue Gas a) sampl. pt., b) stack exit		250-275		
APC - Inlet		-		
APC - Outlet				
Web		315°F		
Chill Exhaust		65°F		
Oven/Dryer (specify)- Bake Temp.		375°F		
Static Press Stack "H_2O (ΔH)		5.0		
Atmospheric "H_g		28.40		
Press Drop APC Fan		-		
Press Operating Speed		580 ft/min, 17,000 iph		
Web width/sheet dim		28" (1 web)		
# Printing Units/# Plate cyl.		5 (perfecting)		
# Colors per side/coat thickness		5 per side		
Type of Paper/Sheet		Coated		
Grade		Gloss white		
Wt. of Paper		55#		
Ink consumption (% coverage)		4-5 lb/hr (approx.)		
Duration of Run		Continuous, several days		
Color of Ink		5 colors (see att. sheet)		
Passes thru Drier		One		
Gas Meter Start		-		
Reading to Drier End		-		
Fan (H.P.)		-		

Data Sheet #2-ECD

Test No.: 2
Plant Code No.: 1-W.O.

Graphic Arts Technical Foundation
Environmental Control Division
Research Department
Pittsburgh, Pennsylvania 15213

Test Date: March 17, 1971
Conditions: 5-color
1-web perfecting

Physical and Operational Plant Data

Test	Reading	Time	Comments
Atmospheric Press Plant area	29.75	9:00 am	Overcast intermittent snow flurries
Temperature	72°F		
Relative Humidity	50%		
Wind Speed	Westerly 10-15 mph		
Ambient Temp.	35°F	10:20	
db/wb ambient	88/78		
db/wb stack	91/84		
Flue Gas a) sampl. pt., b) stack exit	240°F		
APC - Inlet	-		
APC - Outlet	-		
Web	315°F		
Chill Exhaust	61°F		
Oven/Dryer (specify)	370°F		
Static Press Stack "H_2O (ΔH)	5.0		
Atmospheric "H_g	29.12		
Press Drop APC Fan	-		
Press Operating Speed	580 ft/min, 17,000 iph		
Web width/sheet dim	28" (1 web)		
# Printing Units/# Plate cyl.	5 units (perfecting)		
# Colors per side/coat thickness	5 color per side		
Type of Paper/Sheet	coated		
Grade	Gloss white		
Wt. of Paper	55#		
Ink consumption (% coverage)	4-5 lb/hr		
Duration of Run	Continuous		
Color of Ink	5 colors		
Passes thru Drier	One		
Gas Meter Start	-		
Reading to Drier End	-		
Fan (H.P.)	-		

Data Sheet #2-ECD

Graphic Arts Technical Foundation
Environmental Control Division
Research Department
Pittsburgh, Pennsylvania 15213

Test No.: 3
Plant Code No.: 1 W.O.

Test Date: March 18, 1971
Conditions: 5-color
1-web perfecting

Physical and Operational Plant Data

Test	Reading	Time	Comments
Atmospheric Press	29.28	10:15 am	Sunny, little wind
Temperature	72°F		
Relative Humidity	55%		
Wind Speed	0-5 mph		
Ambient Temp.	45°F		
db/wb ambient	-		
db/wb stack	-		
Flue Gas a) sampl. pt., b) stack exit	Sample point - 200°F		
APC - Inlet	-		
APC - Outlet	-		
Web	250°F		
Chill Exhaust	55°F		
Oven/Dryer (specify)	270°F		
Static Press Stack "H_2O (ΔH)	29.05		
Atmospheric "H_g	5.5		
Press Drop APC Fan	-		
Press Operating Speed	300 ft/min		
Web width/sheet dim			
# Printing Units/# Plate cyl.	No printing, oven on, paper through		
# Colors per side/coat thickness			
Type of Paper/Sheet	Coated		
Grade	Gloss		
Wt. of Paper	55#		
Ink consumption (% coverage)	-		
Duration of Run	-		
Color of Ink	-		
Passes thru Drier	-		
Gas Meter Start	-		
Reading to Drier End	-		
Fan (H.P.)	-		

Data Sheet #3-ECD

Graphic Arts Technical Foundation
Environmental Control Division
Research Department
Pittsburgh, Pennsylvania 15213

Plant Code No. 1-W.O. Date: 3/16-17-18, 1971

Effluent Sampling Data

Sample #	Time	Period	Collection Point	Probe Length	Variac Setting
March 16, 1971					
#11	2:12-24	12 min	At traverse point	12"	80"
#12	2:37-49	12 min		12"	80"
March 17, 1971					
*#9	11:15-27	12 min	At point of	12"	80"
*#10	11:15-27	12 min	traverse, point 3" from	12"	80"
*(Samples taken at same time, Sample #10 downstream of #9)					
#7	1:15	5 sec	At traverse point	5"	80"
#8	1:25-30	5 min	At traverse point	4.5-5"	80"
March 18, 1971					
#6	11:20	0.5 min	At traverse point	12"	80"
#3	11:25-26	1.0 min	At traverse point	12"	80"
		Note: Samples #6 and #3 taken with oven on no printing or paper flow			
#5	12:51-1:03	12 min	At traverse point	12"	80"
#4	12:51-1:03	12 min		12"	80"
		Note: Samples #5 and 4 taken with paper only passing through oven at varying press speed of between 100 to 300 ft/min respectively.			

DATA SHEET #3-ECD-A
(Analytical results in ppm)

Sample No.	Coating	Laboratory*	CO	CH_4	CO_2	Organics		
						Cylinder	Trap	Probe
12	5-color	M.I.	Nil	26	4859	4	134	769
11	5-color	C.C.	13	Nil	5880	120	149	102
10	5-color	M.I.	Nil	23	4470	4	111	1396
9	5-color	C.C.	26	13	6780	69	140	305
8	5-color	M.I.	Nil	24	3845	6	62	1268
7	5-color	M.I.	Nil	24	4827	11	24	1132
6	Oven on No printing or paper flow	M.I.	Nil	11	1082	Nil	Nil	5
5	Paper only	M.I.	Nil	9	670	Nil	Nil	9
4	Paper only	M.I.	Nil	3	2228	Nil	441	10
3	Oven on No printing or paper flow	M.I.	Nil	10	2175	Nil	Nil	3

*C.C. - Cal-Colonial
M.I. - Mellon Institute

DATA SHEET #3-ECD-B
(Calculated Emission Rates)

Sample No.	Total Organic	Flow Rate (scfm)	* Organic Emission (lb c/hr)
12	907	6290	10.8
11	371	6290	4.4
10	1511	6445	18.5
9	514	6445	6.3
3	1336	6445	16.4
7	1167	6445	14.3
6	5	6375	.061
5	9	-	.109
4	441	-	5.35
3	3	6375	.036

*Calculated on the following basis:

$$\text{lb/carbon/hr} = 1.90 \times 10^{-6} \times \text{scfm} \times \text{ppm}$$

Data Sheet #5-ECD

Test No.: 1
Plant Code No.: 1-W.O.
Sampling Location
Horizontal run of duct
Approx. 10 ft length

Graphic Arts Technical Foundation
Environmental Control Division
Research Department
Pittsburgh, Pennsylvania 15213

Date: March 16, 1971
GATF Personnel:
R. R. Gadomski
W. J. Green

Gas Velocity Data

Point No.	Time: 11:00 am			Time: 11:15 am		
	Vel. Head in. H_2O (h)	Temp °F	Velocity ft/sec	Vel. Head in. H_2O (h)	Temp °F	Velocity ft/sec
A-1	.10	250	24.4	.12	250	26.7
A-2	.12	250	26.7	.12	250	26.7
A-3	.14	250	29.0	.14	250	29.0
A-4	.15	250	29.9	.14	250	29.0
A-5	.16	250	30.8	.17	250	32.0
A-6	.19	250	33.6	.18	250	32.8
A-7	.21	250	35.4	.18	250	32.8
A-8	.22	250	36.2	.21	250	35.4
A-9	.21	250	35.4	.24	250	37.8
A-10	.18	250	32.8	.18	250	32.8
Av.		250	31.4		250	31.6

A. Av. velocity (traverse) ft/sec 31.5
B. Av. velocity (ref. pt.) ft/sec 31.4
C. Flue factor A/B 1.0
D. Pitot Tube correction factor (if any) 1.0
E. Gas density factory (ref. to air) 1.0
F. Corrected velocity B x C x D x E ft/sec 31.4
G. Area of flue, sq. ft. 4.9
H. Av. flue temp. °F 250
I. Flow rate @ stack cond.
F x G x 60, acfm 9250
J. P_s = 28.00
K. Corrected to std. cond.
Flow rate = $\frac{520 \times I \times P_s}{H + 460 \times 29.92}$, scfm 6290

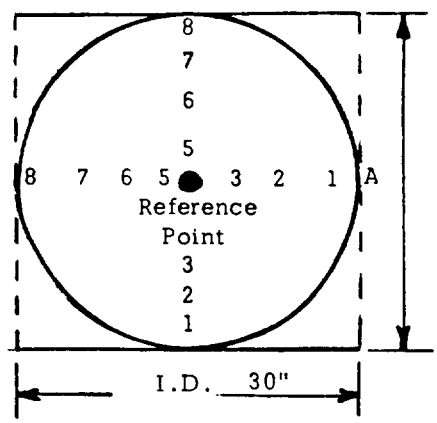

Static (ΔH) "H_2O = 5.0
P_g = $-\Delta H/13.6$ = 4
P_{atm} "Hg = 28.40
$P_s = P_{atm} - P_g$ = 28.40-.40=28.00

Data Sheet #5-ECD

Test No.: 2
Plant Code No.: 1-W.O.
Sampling Location
Horizontal run of duct
Same as Test #1

Graphic Arts Technical Foundation
Environmental Control Division
Research Department
Pittsburgh, Pennsylvania 15213

Date: March 17, 1971
GATF Personnel:
R. R. Gadomski
W. J. Green

Gas Velocity Data

Point No.	Time: 10:45 am			Time:		
	Vel. Head in.H_2O (h)	Temp °F	Velocity ft/sec	Vel. Head in.H_2O (h)	Temp °F	Velocity ft/sec
A-1	.16	240	30.7			
A-2	.16	240	30.7			
A-3	.17	240	31.3			
A-4	.17	240	31.3			
A-5	.17	240	31.3			
A-6	.17	240	31.3			
A-7	.17	240	31.3			
A-8	.17	240	31.3			
A-9	.17	240	31.3			
A-10	.18	240	32.5			
Av.		240	31.3			

A. Av. velocity (traverse) ft/sec 31.3
B. Av. velocity (ref. pt.) ft/sec 31.3
C. Flue factor A/B 1.0
D. Pitot Tube correction factor(if any) 1.0
E. Gas density factory(ref. to air) 1.0
F. Corrected velocity B x C x D x E ft/sec 31.3
G. Area of flue, sq. ft. 4.9
H. Av. flue temp. °F 240
I. Flow rate @ stack cond.
F x G x 60, acfm 9204
J. P_s = 28.72
K. Corrected to std. cond.
Flow rate = $\frac{520 \times I \times P_s}{H + 460 \times 29.92}$, scfm 6445

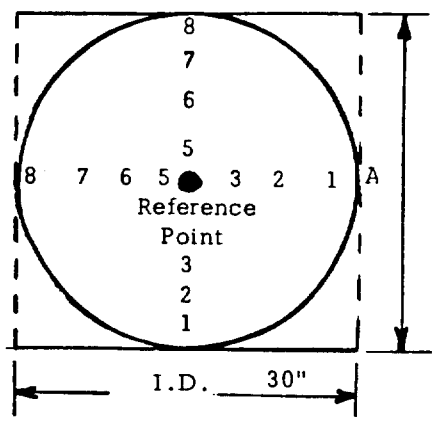

Static (ΔH) "H_2O = 5.0
P_g = - ΔH/13.6 = 4
P_{atm} "H_g = 29.12
$P_s = P_{atm} - P_g$ = 29.12-.40=28.72

Data Sheet #5-ECD

Test No.: 3
Plant Code No.: 1-W.O.
Sampling Location
Same as Test #1 & #2

Graphic Arts Technical Foundation
Environmental Control Division
Research Department
Pittsburgh, Pennsylvania 15213

Date:
GATF Personnel:
R. R. Gadomski
W. J. Green

Gas Velocity Data

Point No.	Time: 10:30 am			Time:		
	Vel. Head in. H_2O (h)	Temp °F	Velocity ft/sec	Vel. Head in. H_2O (h)	Temp °F	Velocity ft/sec
A-1	.14	200	28.2			
A-2	.14	200	28.2			
A-3	.14	200	28.2			
A-4	.14	200	28.2			
A-5	.14	200	28.2			
A-6	.14	200	28.2			
A-7	.14	200	28.2			
A-8	.14	200	28.2			
A-9	.14	200	28.2			
Av.		200	28.2			

A. Av. velocity (traverse) ft/sec 28.2
B. Av. velocity (ref. pt.) ft/sec 28.2
C. Flue factor A/B 1.0
D. Pitot Tube correction factor(if any) 1.0
E. Gas density factory(ref. to air) 1.0
F. Corrected velocity B x C x D x E ft/sec 28.2
G. Area of flue, sq. ft. 4.9
H. Av. flue temp. °F 200
I. Flow rate @ stack cond.
F x G x 60, acfm 8280
J. P_s = 28.65
K. Corrected to std. cond.
Flow rate = $\frac{520 \times I \times P_s}{H + 460 \times 29.92}$, scfm 6375

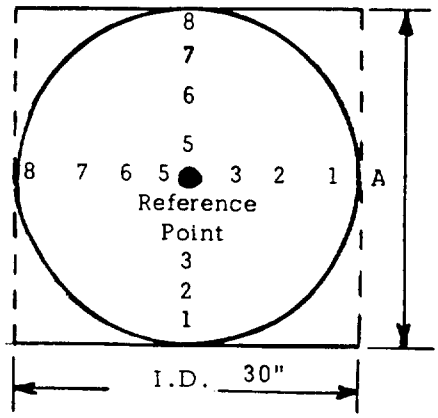

Static (ΔH) "H_2O = 5.5
P_g = $-\Delta H/13.6$ = .40
P_{atm} "Hg = 29.05
$P_s = P_{atm} - P_g$ = 29.05-40=28.65

Approved

MAY 7 - 1971

GATF

CARNEGIE-MELLON UNIVERSITY

MELLON INSTITUTE

RESEARCH SERVICES

Physical Measurements Laboratory (7615-2)

Fellow Dr. W. Green

Account No. Graphic Arts Technical Foundation P.O. #3104

Investigation Air Pollution Program

Investigation No. PML 71-205 (1-WO)

Date of Report April 30, 1971

NATURE OF REPORT: Preliminary ____ Progress ____ Final xx

The eight stack gas samples which you submitted have been analyzed by the procedure described in a previous report dated October 2, 1970. The data are tabulated in the attached table.

Paul R. Eisaman
Fellow
Physical Measurements Laboratory

PRE:jdf

Form 111

Table I

Stack Sample Analyses

(1-WO)

Cylinder No.	3	4	5	6	7	8	10	12
Sample Volume, cc NTP	279.1	289.9	283.4	293.4	288.5	291.3	298.7	287.8
Content, V/V % as CO_2								
Hydrogen	Trace	Trace	Trace	Trace	Trace	Trace	Trace	Trace
Carbon Monoxide	-----	-----	-----	-----	-----	-----	-----	-----
Carbon Dioxide	0.2175	0.2228	0.0670	0.1082	0.4827	0.3845	0.4470	0.4859
Methane	0.0010	0.0003	0.0009	0.0011	0.0024	0.0024	0.0023	0.0026
Organics	-----	-----	-----	-----	0.0011	0.0006	0.0004	0.0004
Trap, Low Boilers	-----	-----	-----	-----	-----	0.0035	0.0069	0.0050
Trap, High Boilers	-----	0.0441	-----	-----	0.0024	0.0027	0.0042	0.0084
Probe, Low Boilers	-----	-----	-----	-----	0.0240	0.0224	0.0860	0.0698
Probe, High Boilers	0.0003	0.0010	0.0009	0.0005	0.0892	0.1044	0.0536	0.0081

CAL-COLONIAL CHEMSOLVE
CONSULTING AND RESEARCH LABORATORIES
871 EAST LAMBERT
LA HABRA, CALIFORNIA 90631
(714) TR 9-6057 (213) OW 1-4848

APR 2 - 1971
GATF

March 30, 1971.

Mr. W.J. Green,
Graphic Arts Technical Foundation,
4615 Forbes Ave.,
Pittsburgh, Pa. 15213

(1-WO)

Re: P.O. #07816; analysis of two gas samples with trap & probe for CO, CH_4, and CO_2 and residual organics

Each of the samples was analyzed using a combination of gas chromatographic separation and oxidation and reduction techniques. The concentration of organics found in the trap and probe of each sample was based on the reported volume of the sample bottle.

Results:

S/N	CO	CH_4	CO_2	Residual Organics	Trap	Probe
9	26	13.2	6780	69	140	305
11	13	Nil	5880	120	149	102

Ref: Cal-Colonial 52087A

Respectfully submitted,

W.R. Hodson,
CAL-COLONIAL CHEMSOLVE.

Data Sheet #1-ECD

Graphic Arts Technical Foundation
Environmental Control Division
Research Department
Pittsburgh, Pennsylvania 15213

I. *Source Location Data

1. Firm Name: _____ Phone _____
2. Address: _____
3. Representative(s) Contacted: _____
4. Plant Code No.: 2-W.O.

II. Source and Sample Background Data

5. Date(s) of Test(s): April 12, 13, 14, 15, 1971
6. Process(es) and Basic Equipment (incl. throughput rates): Lithographic web offset, 5 Levey Four-color, two web presses, 3 presses equipped with Levey Model G-1070 direct flame hot air dryers, 2 presses equipped with Overly, hot air high velocity dryers.
7. Product(s): Publication printing
8. Amounts Consumed (Monthly Av.)
   A. Paper or other substrates: Not applicable
   B. Inks and Solvents: Not applicable
9. Dryer or Oven Equipment:
   A. Type, manufacturer, model: Levey Model G-1070
   B. Air Flows (rated), Temp.: 3830 cfm @ 445°F (rated)
   C. Fuel or Heat Consumption: 2220 ft^3/hr
   D. Comment: Exhaust volumes as well as gas consumption rates have been performed by dryer manufacturers.
10. Stack Geometry:
   A. No. (Single, manifolded) Single stack per dryer
   B. Cross-sectional area: Dryer A - 1.44 sq ft, Dryer B - 0.34 sq ft.
   C. Height above roof: 4 ft in case of both stacks
   D. Approx. running length: 10 to 20 ft from dryer
   E. Comment: Chill exhaust is exhausted through separate stack.
11. APC Equipment (if any) None, one stack tested utilized rain cap with considerable down-wash of effluent
12. General Comments: Sampling points were ideally located within recommended practice.

*Restricted use only.

Data Sheet #2-ECD

Test No.: 1
Plant Code No.: 2-W.O.

Graphic Arts Technical Foundation
Environmental Control Division
Research Department
Pittsburgh, Pennsylvania 15213

Test Date: 4/13/71
Conditions: 2-color, 2-web d.f.h.a. dryer

Physical and Operational Plant Data

Test	Press A Reading	Press B Reading	Time	Comments
Atmospheric Press (Plant)	29.00		12:30 to 4:00 pm	Sunny and mild, winds variable S/SW Ideal weather for sampling
Temperature (Plant)	72°F			
Relative Humidity (Plant)	55%			
Wind Speed Ambient	10-15 mph			
Ambient Temp. (test site)	84°F			
db/wb ambient	-			
db/wb stack	86°F/74°F	93°F/82°F		
Flue Gas a) sampl. pt., b) stack exit	380°F	230°F		
APC - Inlet	-			
APC - Outlet	-			
Web	-			
Chill Exhaust	70°F			
Oven/Dryer (specify)	-			
Static Press Stack "H_2O (ΔH)	0.40	2.7		
Atmospheric "H_g	28.92	28.92		
Press Drop APC Fan	-	-		
Press Operating Speed	1200 wfm	500 wfm		wfm = web feet per min. iph = impressions per hour
Web width/sheet dim	(37,000 iph)			
# Printing Units/# Plate cyl.	4	4		
# Colors per side/coat thickness	*2-color	*2-color		
Type of Paper/Sheet	Newsprint	Newsprint		Press A Great Northern Paper 68" roll, finish 'o'Eng. Press B - same only 2-28" rolls
Grade				
Wt. of Paper	32# stock	32# stock		
Ink consumption (% coverage)	140# color	125# color		Press A Ink used: pump blk. Precision batch 14928 Blue Precision PCB 3822A Press B Ink used: blk. Levey Blue Precision PCB 3822A All inks used were formulated using odorless solvent.
Duration of Run	150# blk.	140# blk.		
Color of Ink/Coating	300,000 imp	280,000		
Passes thru Drier	Blue & Blk.			
Gas Meter Start	One			
Reading to Drier End	-			
Fan (H.P.)	-			
Solvent/Coating Usage Rate	-			
	*0.5# ink/1000 imp. (black) sl. less for color			

Data Sheet #2-ECD

Test No.: 2
Plant Code No.: 2-W.O.

Graphic Arts Technical Foundation
Environmental Control Division
Research Department
Pittsburgh, Pennsylvania 15213

Test Date: 4/14/71
Conditions: 2-color, 2-web
d.f.h.a. dryer

Physical and Operational Plant Data

Test	Press A Reading	Press B	Time	Comments
Atmospheric Press (Plant)	28.86		9:00 am	Cool and windy over-cast conditions prevailed
Temperature (Plant)	70°F		to	
Relative Humidity (Plant)	60%			
Wind Speed Ambient	10-20 mph		12:30 pm	
Ambient Temp. (test site)	45°F			
db/wb ambient	-			
db/wb stack	-			
Flue Gas a) sampl. pt., b) stack exit	440°F	250°F		
APC - Inlet	-			
APC - Outlet	-			
Web	-			
Chill Exhaust	73°F			
Oven/Dryer (specify)(bake temp.	-			
Static Press Stack "H_2O (ΔH)	0.40	2.7		
Atmospheric "H_g	28.96	28.96		
Press Drop APC Fan	-	-		
Press Operating Speed	Same as Test No. 1			
Web width/sheet dim				
# Printing Units/# Plate cyl.				
# Colors per side/coat thickness				
Type of Paper/Sheet	Same as Test No. 1			
Grade				
Wt. of Paper				
Ink consumption (% coverage)	Same as Test No. 1			
Duration of Run				
Color of Ink				
Passes thru Drier				
Gas Meter Start				
Reading to Drier End				
Fan (H.P.)				
Solvent/Coating Usage Rate				

Data Sheet #3-ECD

Graphic Arts Technical Foundation
Environmental Control Division
Research Department
Pittsburgh, Pennsylvania 15213

Plant Code No. 2-W.O.

Date: 4/13/71

Effluent Sampling Data

Sample #	Time	Period	Collection Point	Probe Length	Variac Setting
5	1:08-1:23 pm	15 min.	Exhaust from Press A taken at point of traverse	Standard 12"	Sample #5 taken from 2-color, 2-web job; sample #15 was with paper only (no printing).
15	1:28-1:31	3 min.			
0	2:30-2:45	15 min.	Exhaust from Press B taken at point of traverse	Standard 12"	Duplicate sampling. Samples taken at right angles to each other from 2-color, 2-web job.
13	2:30-2:45	15 min.			

Data Sheet #3-ECD

Graphic Arts Technical Foundation
Environmental Control Division
Research Department
Pittsburgh, Pennsylvania 15213

Plant Code No. 2-W.O. Date: 4/14/71

Effluent Sampling Data

Sample #	Time	Period	Collection Point	Probe Length	Comments
12 3	9:00-9:15 am 9:00-9:15	15 min.	Exhaust from Press B taken at point of traverse	Standard 12"	Duplicate samples of dryer effluent from 2-color, 2-web process. Samplers at right angles.
2 14	10:27-10:32 10:27-10:32	5 min. 5 min	Exhaust from Press B taken at point of traverse	Standard 12"	Dryer exhaust only, no printing, no paper through dryer. Duplicate samples.
10 6	10:50-11:05 10:50-11:05	15 min. 15 min.	Exhaust from Press A taken at point of traverse	Standard 12"	Duplicate samples of of dryer effluent from 2-color, 2-web process. Traps on samplers packed with glass beads and glass wool.
4 8	2:12-2:17 pm 2:12-2:17	15 min. 15 min.	Exhaust from Press A taken at point of traverse	Standard 12"	Samples taken of dryer effluent from 2-color, 2-web process. Sampler #4: probe inserted perpendicular to flow. Sampler #8: probe inserted in direction of flow (normal practice).

DATA SHEET #3-ECD-A

Date	Line	Sample No.	Total Organics (ppm)	Flow Rate (scfm)	Organic *Emission (lb/hr)
4/13	A	5	4228	2871	23.1
4/13	A	15	1847	2871	10.1
4/13	B	1	3518	1772	11.8
4/13	B	13	5230	1772	17.6
4/14	B	3	4095	1772	13.8
4/14	B	12	4868	1772	16.4
4/14	A	4	4919	2871	26.8
4/14	A	8	3438	2871	18.7
4/14	A	6	5463	2871	29.8
4/14	A	10	7336	2871	40.0
4/14	B	2	2173	1772	6.96
4/14	B	14	3776	1772	12.7

*calculated on the following basis:

$$\text{lb C/hr} = 1.90 \times 10^{-6} \text{ (scfm) (ppm)}$$

DATA SHEET #3-ECD-B
(All Values Given in ppm)

Date	Line	Sample No.	CO	CH_4	CO_2	Organics Cylinder	Organics Trap-Probe	Comments
4/13	A	5	47	55	16050	40	4188	2 color, 2 web
4/13	A	15	19	87	18979	12	1835	Paper only
4/13	B	1	13	375	10836	68	3450	Duplicate samples, 2 color, 2 web
4/13	B	13	41	377	11167	67	5163	
4/14	B	3	6	450	10231	81	4014	Duplicate samples, 2 color, 2 web
4/14	B	3	24	439	9906	65	4303	
4/14	A	4	6	62	11857	19	4900	Collected ⊥ to stream
4/14	A	8	4	65	12180	17	3421	Collected // to stream
4/14	A	6	101	88	16300	45	5418	Duplicates using glassbeads in trap
4/14	A	10	10	88	15845	41	7295	
4/14	B	2	25	294	13417	23	2150	Dryer only, no paper, no printing
4/14	B	14	19	199	16951	19	8757	

DATA SHEET #3-ECD-C

Date: April 13, 1971

Code: 2-W.O.

Operation: Press A, 2-color, 2-web, uncoated paper (32# stock) @ 37,000 iph

Stack samples were obtained from the stack of Press No. A with a Mine Safety Appliance, Universal Testing Kit, Model #2, No. 83498. Standardized operation procedures were followed to accurately control both the volume of air sampled and the rate of air flow during the test.

The measurement of gases was conducted through the use of selected gas detector tubes with the following results:

Compound	Concentration (ppm)
Acetaldehyde	50
Toluene	50-100
Xylene	100-200
Unsaturated Hydrocarbons	200-400
NO_x	None

Data Sheet #5-ECD

Test No.: 1
Plant Code No.: 2-W.O
Sampling Location
Press Line A
Point of Traverse
31" above roof level

Graphic Arts Technical Foundation
Environmental Control Division
Research Department
Pittsburgh, Pennsylvania 15213

Date: 4/13-4/14/71
GATF Personnel:
R. R. Gadomski
W. J. Green
Rectangular stack 16" x 13"

Gas Velocity Data

Point No.	Time: 12:30 pm, 4/13/71			Time: 10:00 am, 4/14/71		
	Vel. Head in. H_2O (h)	Temp °F	Velocity ft/sec	Vel. Head in. H_2O (h)	Temp °F	Velocity ft/sec
A-1	.47	380	57.4	.41	440	56.0
A-2	.46	380	56.8	.44	440	58.0
A-3	.42	380	54.5	.45	440	58.3
B-1	.48	380	58.3	.45	440	58.3
B-2	.53	380	60.9	.44	440	58.0
B-3	.50	380	59.4	.43	440	57.3
C-1	.46	380	56.8	.45	440	58.3
C-2	.46	380	56.8	.42	440	56.6
C-3	.42	380	54.5	.41	440	56.0
Av.		380	57.3		440	57.4

A. Av. velocity (traverse) ft/sec 57.3
B. Av. velocity (ref. pt.) ft/sec -
C. Flue factor A/B -
D. Pitot Tube correction factor(if any) 1.0
E. Gas density factory(ref. to air) 1.0
F. Corrected velocity B x C x D x E ft/sec 57.3
G. Area of flue, sq. ft. 1.44
H. Av. flue temp. °F 410
I. Flow rate @ stack cond.
F x G x 60, acfm 4950
J. P_s = 28.92
K. Corrected to std. cond.
Flow rate = $\frac{520 \times I \times P_s}{H + 460 \times 29.92}$, scfm 2871

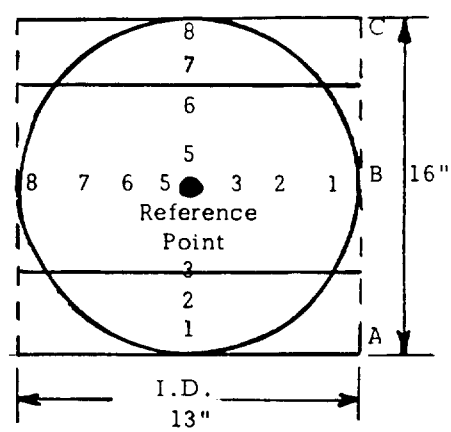

Static (ΔH) "H_2O = .40
P_g = - ΔH/13.6 = .03
P_{atm} "H_g = 28.92-28.96
$P_s = P_{atm} - P_g$ = 28.92

Data Sheet #5-ECD

Test No.: 2
Plant Code No.: 2-W.O.
Sampling Location
Press Line B
Point of Traverse
31" above roof level

Graphic Arts Technical Foundation
Environmental Control Division
Research Department
Pittsburgh, Pennsylvania 15213

Date: 4/13-4/14/71
GATF Personnel:
R. R. Gadomski
W. J. Green
circular stack 8" dia.

Gas Velocity Data

Point No.	Time: 1:00 pm - 4/13/71			Time: 2:00 pm - 4/14/71		
	Vel. Head in.H_2O (h)	Temp °F	Velocity ft/sec	Vel. Head in.H_2O (h)	Temp °F	Velocity ft/sec
A-1	2.8	230	127.6	2.5	250	121.8
A-2	3.0	230	131.4	2.5	250	121.8
A-3	3.2	230	136.3	2.3	250	116.6
A-4	2.8	230	127.6	2.0	250	110.2
B-1	2.1	230	110.2	2.8	250	128.5
B-2	2.4	230	118.6	3.0	250	133.4
B-3	2.5	230	120.3	3.0	250	133.4
B-4	1.9	230	100.7	2.5	250	121.8
Av.		230	121.4		250	123.4

A. Av. velocity (traverse) ft/sec 122.4
B. Av. velocity (ref. pt.) ft/sec -
C. Flue factor A/B -
D. Pitot Tube correction factor(if any) 1.0
E. Gas density factory(ref. to air) 1.0
F. Corrected velocity B x C x D x E ft/sec 122.4
G. Area of flue, sq. ft. 0.34
H. Av. flue temp. °F 240
I. Flow rate @ stack cond.
F x G x 60, acfm 2496
J. P_s = 28.74
K. Corrected to std. cond.
Flow rate = $\frac{520 \times I \times P_s}{H + 460 \times 29.92}$, scfm 1772

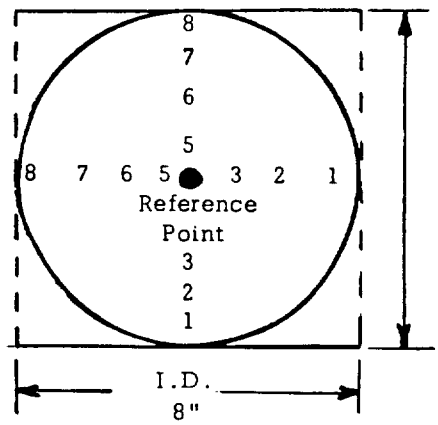

Static (ΔH) "H_2O = 2.70
P_g = - $\Delta H/13.6$ = .20
P_{atm} "Hg = 28.92 - 28.96
$P_s = P_{atm} - P_g$ = 28.94 - .20 = 28.74

Approved

CARNEGIE-MELLON UNIVERSITY

MELLON INSTITUTE
RESEARCH SERVICES

Physical Measurements Laboratory (7615-2)

Fellow Dr. W. Green

Account No. Graphic Arts Technical Foundation P.O. #3104

Investigation Air Pollution Program

Investigation No. PML 71-210-(2-WO)

Date of Report May 5, 1971

NATURE OF REPORT: Preliminary ____ Progress ____ Final xx

The twelve samples of stack gas effluent which you submitted have been analyzed by the procedure described in a previous report dated October 2, 1970. The data are tabulated in the attached table.

Paul R. Eisaman
Fellow
Physical Measurements Laboratory

PRE:jdf

Form 111

Table I

Stack Gas Samples
(2-W.O.)

Cylinder No.	1	2	3	4	5	6	8	10	12	13	14	15
Sample Volume, cc NTP	259.3	251.0	268.1	276.1	248.9	288.0	275.0	268.2	275.8	262.2	271.2	278.4
Content, V/V % as CO_2												
Carbon Monoxide	0.0013	0.0025	0.0006	0.0011	0.0047	0.0101	0.0004	0.0079	0.0024	0.0041	0.0027	0.0019
Carbon Dioxide[a]	1.0836	1.3417	1.0231	1.1857	1.6050	1.6300	1.2180	1.5845	0.9906	1.1167	1.6951	1.8979
Methane	0.0375	0.0294	0.0450	0.0062	0.0055	0.0088	0.0065	0.0088	0.0439	0.0377	0.0199	0.0087
Organics[a]	0.0068	0.0023	0.0081	0.0019	0.0040	0.0045	0.0017	0.0041	0.0065	0.0067	0.0019	0.0012
Traps, Low Boiling[b]	0.0098	0.0037	0.0080	0.0049	0.0078	0.0112	0.0011	0.0071	0.0118	0.0084	0.0049	0.0028
Traps, High Boiling[b]	0.3352	0.2113	0.3934	0.4851	0.4110	0.5306	0.3410	0.7224	0.4685	0.5079	0.3708	0.1807

(a) To shorten the time for an analysis, the Poropak Q column was shortened from 19' 6" to 6'. The separation by the shorter column was satisfactory.

(b) These traps contained a glass wool plug near their connection to the cylinders. The objective was to intercept any aerosol which may have formed. In traps Nos. 6 and 10, Pyrex glass spheres were used with the same objective.

Data Sheet #1-ECD

Graphic Arts Technical Foundation
Environmental Control Division
Research Department
Pittsburgh, Pennsylvania 15213

I. *Source Location Data

1. Firm Name: _____ Phone _____
2. Address: _____
3. Representative(s) Contacted: _____
4. Plant Code No.: 3-W.O

II. Source and Sample Background Data

5. Date(s) of Test(s): August 24, 25, 26, 1971
6. Process(es) and Basic Equipment (incl. throughput rates): 3 press lines - #1 - 5-unit Harris-Cottrell M1000 web offset press w/Offen 10 ft direct flame hot air dryer; #2 - 4- unit ATF press w/Offen 6 ft multi-stage dryer; #3 - 5-unit ATF press w/Offen air jet 10 ft direct flame hot air dryer.
7. Product(s): Publication and Advertisement Printing
8. Amounts Consumed (Monthly Av.)
   A. Paper or other substrates: Coated & uncoated paper stocks
   B. Inks and Solvents: Heatset type inks (1 to 4 color work)
9. Dryer or Oven Equipment:
   A. Type, manufacturer, model: #1 (Offen Job No. 6438), #2 (multi-stage) #3 (Offen Job No. 6200)
   B. Air Flows (rated), Temp.: Not available
   C. Fuel or Heat Consumption: Not separately metered
   D. Comment: Dryer #2 of old design, #1 reflects more current design in drying systems as does #3 line.
10. Stack Geometry:
   A. No. (Single, manifolded) Each dryer exhausts to separate stack
   B. Cross-sectional area: #1 - 3.14 sq ft, #2 - 4.90, #3 - 5.58
   C. Height above roof: 8-14 ft depending on press line
   D. Approx. running length: 50 ft (each stack)
   E. Comment: Excellent stack configuration for source sampling
11. APC Equipment (if any) None
12. General Comments: Variability of jobs (2-color, 4-color process on various types of paper) coupled with stack configuration presents a good site at which to field test.

*Restricted use only.

Data Sheet #2-ECD

Test No.: 1
Plant Code No.: 3-W.O.

Graphic Arts Technical Foundation
Environmental Control Division
Research Department
Pittsburgh, Pennsylvania 15213

Test Date: 8/24/71
Conditions: recorded for 2 stack studies

Physical and Operational Plant Data

Test	Readings Press #2	Press #1		Comments	
Atmospheric Press	29.30	29.30		Conditions favorable for conduct of test. Sunny, warm, winds variable, northerly 5-15 mph.	
Temperature	78°F	83°F			
Relative Humidity	60%	60%			
Wind Speed	5-15 mph	5-15 mph			
Ambient Temp.	80°F	81°F			
db/wb ambient	-	-			
db/wb stack	94/79	95/80			
Flue Gas a) sampl. pt., b) stack exit	240	215			
APC - Inlet	-	-			
APC - Outlet	-	-			
Web	-	-			
Chill Exhaust	70	70			
Oven/Dryer (specify) - Bake Temp.	375	420			
Static Press Stack "H_2O (ΔH)	0.03	0.12			
Atmospheric "H_g	28.94	28.94			
Press Drop APC Fan	-	-			
Press Operating Speed/	12-18000 iph	18-24000 iph		Press speed varied depending on test run.	
Web width/sheet dim (# webs)	2 web	1 web			
# Printing Units/# Plate cyl.	2 units	4 units			
# Colors per side/coat thickness	2-color	4-color			
Type of Paper/Sheet	uncoated	coated			
Grade	32# stock	40# gloss			
Wt. of Paper/Wt. of Coating	Newsprint	blade			
Ink consumption (% coverage)	1560 # black 66# blue for 951,000 impressions or .0017 #/imp	315# black 256# red 245# blue 345# yellow for 490,000 impressions or .0024 #/imp			

Data Sheet #2-ECD

Test No.: 2
Plant Code No.: 3-W.O.

Graphic Arts Technical Foundation
Environmental Control Division
Research Department
Pittsburgh, Pennsylvania 15213

Test Date: 8/25/71
Conditions: Recorded for 2 stack studies

Physical and Operational Plant Data

Test	Readings Press #2	Press #3		Comments	
Atmospheric Press	30.10	30.10		Conditions favorable for conduct of test Sunny, warm, winds variable, northwest-erly 5-15 mph	
Temperature	63°F	86°F			
Relative Humidity	50%	50%			
Wind Speed	5-15 mph	5-15 mph			
Ambient Temp.	68	88			
db/wb ambient	-	-			
db/wb stack	-	94/79			
Flue Gas a) sampl. pt., b) stack exit	240	230			
APC - Inlet	-	-			
APC - Outlet	-	-			
Web	-	-			
Chill Exhaust	70	70			
Oven/Dryer (specify) - Bake Temp.	375	350			
Static Press Stack "H_2O (ΔH)	0.03	0.03			
Atmospheric "H_g	30.00	30.00			
Press Drop APC Fan	-	-			
Press Operating Speed/	12,000 iph	15,000 iph			
Web width/sheet dim (#webs)	2 web	1 web			
# Printing Units/# Plate cyl.	-	2 units			
# Colors per side/coat thickness	-	2 color			
Type of Paper/Sheet	uncoated	coated			
Grade	32# stock	70# stock			
Wt. of Paper/Wt. of Coating	Newsprint	Brilliant			
Ink consumption (% coverage)	None (Dryer and paper studies only)	164# black 17# green for 72,000 imp .0027 #/imp			

Data Sheet #2-ECD

Test No.: 3
Plant Code No.: 3 W.O.

Graphic Arts Technical Foundation
Environmental Control Division
Research Department
Pittsburgh, Pennsylvania 15213

Test Date: 8/26/71
Conditions: Data on one stack only

Physical and Operational Plant Data

Test	Press #1 Readings			Comments	
Atmospheric Press	31.10			Conditions favorable, sunny, partly cloudy with increasing wind speed	
Temperature	75°F				
Relative Humidity	75%				
Wind Speed	10-25 mph				
Ambient Temp.	72				
db/wb ambient	-				
db/wb stack	95/80				
Flue Gas a) sampl. pt., b) stack exit	215				
APC - Inlet	-				
APC - Outlet	-				
Web	-				
Chill Exhaust	70				
Oven/Dryer (specify) - Bake Temp.	420				
Static Press Stack "H_2O (ΔH)	0.12				
Atmospheric "H_g	30.92				
Press Drop APC Fan	-				
Press Operating Speed/	18,000 iph				
Web width/sheet dim (# webs)	1 web				
# Printing Units/# Plate cyl.	4 units				
# Colors per side/coat thickness	4 color				
Type of Paper/Sheet	coated				
Grade	50# stock				
Wt. of Paper/Wt. of Coating	gloss, w.o.				
Ink consumption (% coverage)	Blk-85# Blue-65# Red-70# Yellow-50# for 100,000 impressions or .0027 #/imp				

Data Sheet #3-ECD

Graphic Arts Technical Foundation
Environmental Control Division
Research Department
Pittsburgh, Pennsylvania 15213

Plant Code No. 3 W.O.

Date: 8/24/71

Effluent Sampling Data

Sample #	Time	Period	Probe Configuration	Comments
#1 and #2	22 min.	11:25 am to 11:47 am	Perpendicular and inserted to center of stack diam.	Press #2, 2 color, 2 web, uncoated stock at press speed of 18,000 iph
#3 and #4	23 min	12:12 pm to 12:35 pm	perpendicular and inserted to center of stack diam.	Press #2, 2 color, 2 web, uncoated stock at press speed of 12,000 iph
#5 and #6	20 min.	*12:56-1:00 pm 1:14-1:30 pm **web break interrupted sampling	perpendicular and inserted to center of stack diam.	Press #1, 4 color, 1 web, coated stock at press speed of 24,000 iph
#7 and #8	20 min.	1:40 pm to 2:00 pm	perpendicular same as #5 and #6	Press #1, 4 color, 1 web, coated stock at press speed of 18,000 iph
#9 and #10	20 min	5:13 pm to 5:33 pm	same as previous samples	Press #1, no printing, paper only press speed of 18,000 iph
#11 and #12	20 min.	6:53 pm to 7:13 pm	same as previous samples	Press #1, no printing, no paper only dryer on at operating temperature of 420°F.

Data Sheet #3-ECD

Graphic Arts Technical Foundation
Environmental Control Division
Research Department
Pittsburgh, Pennsylvania 15213

Plant Code No. 3-W.O.

Date: 8/25/71
8/26/71

Effluent Sampling Data

Sample #	Time	Period	Probe Configuration	Comments
#13 and #14	20 min.	8:00 pm to 8:20 pm	perpendicular and inserted to center of stack diam.	Press #2, no printing, paper only, press speed of 12,000 iph
#15 and #16	20 min.	11:20 am to 11:40 am	same as above	Press #2, no printing, no paper, only dryer on at operating temperature of 375°F
#17 and #18	30 min.	1:00 pm 1:30 pm	perpendicular and inserted 4" into duct	Press #3, 2 color, 1 web, coated stock at press speed of 15,000 iph
#19 and #20	30 min.	1:50 pm to 2:20 pm	perpendicular and inserted 12" into duct	Press #3, 2 color, 1 web, coated stock at press speed of 15,000 iph
August 26, 1971				
#21 and #22	30 min.	9:30 am to 10:00 am	perpendicular and inserted 4" into duct	Press #1, 4 color, 1 web, coated stock, at press speed of 18,000 iph
#23 and #24	30 min.	11:00 am to 11:30 am	perpendicular and inserted 12" into duct	Press #1, 4 color, 1 web, coated stock, at press speed of 18,000 iph

Note: Sample #23 lost vacuum from time of packing until usage; sample #24 had loose fitting next to valve.

DATA SHEET #3-ECD-A
(analytical results in ppm)

Press No.	Date	Process	Cylinder No.	Total Organics	CO	CH_4	CO_2
1	8/24/71	4-color, 1-web coated, press speed = 24,000 iph	5	1346	trace	62	2809
			6	1688	trace	48	2349
		4-color, 1-web coated, 18000 iph	7	1589	trace	65	3378
			8	1747	trace	69	4079
		Paper only	9	353	trace	58	3573
			10	203	nil	55	3397
		Dryer only	11	194	nil	54	4126
			12	2360	nil	37	3018
1	8/26/71	4-color, 1-web coated, 18000 iph	21	1111	trace	62	3780
			22	2822	trace	73	4320
			23	916	nil	6	122
			24	811	nil	6	278
2	8/24/71	2-color, 2-web uncoated, 18000 iph	1	1646	16	39	7590
			2	5977	trace	49	8848
		2-color, 2-web uncoated, 12000 iph	3	1077	trace	49	4529
			4	1050	nil	55	4330
	8/25/71	No printing, paper only	13	783	nil	37	3526
			14	624	trace	45	4240
	8/25/71	Dryer only	15	327	trace	61	4746
			16	409	trace	64	5305
3	8/26/71	2-color, 1-web coated, 15000 iph	17	524	nil	23	3731
			18	710	nil	25	3955
			19	605	nil	17	2105
			20	4767	nil	16	2146

DATA SHEET #3-ECD-B
(calculated emission rates)

Press No.	Cylinder No.	Total Organics	Flow Rate	* Organic Emission (lb/hr)
1	5	1346	3900	9.97
	6	1688	"	12.50
	7	1589	"	11.75
	8	1747	"	12.90
	9	353	"	2.62
	10	203	"	1.50
	11	194	"	1.43
	12	2360	"	17.50
	21	1111	"	8.20
	22	2822	"	20.8
	23	916	"	6.79
	24	811	"	6.00
2	1	1646	2320	7.26
	2	5977	"	26.3
	3	1077	"	4.75
	4	1050	"	4.64
	13	783	"	3.46
	14	624	"	2.75
	15	327	"	1.45
	16	409	"	1.75
3	17	524	5600	5.57
	18	710	"	7.55
	19	605	"	6.44
	20	4767	"	47.9

*Calculated on the following basis:

$$\text{lb C/hr} = 1.90 \times 10^{-6} \text{ (scfm) (ppm)}$$

DATA SHEET #3-ECD-C
Comparison Calculated and Observed Emission Rates

Press No.	Cylinder[1] No.	Emission[2] (calculated)	Emission[3] (observed)	(Conversion[4] Factor) $E_{obs.}/E_{calc.}$
1	5 & 6	25.06	11.24	.45
1	7 & 8	19.26	12.32	.63
1	21, 23, 24	19.40	7.00	.36
2	1	16.0	7.26	.45[4]
2	3 & 4	11.75	4.69	.39[8]

(1) Average value of duplicate samples utilized in calculation.
(2) Calculated emission rate inclusive of paper contribution as determined in previous test series.
(3) Based on recorded press data as obtained during test.
(4) Fraction of organics not converted to CO_2 and H_2O in the dryer.

DATA SHEET #3-ECD-D

MOISTURE DETERMINATION CALCULATION

A wet- and dry-bulb method for determining the proportion of water vapor in the duct gas for press #1 was conducted by drawing duct gas through flexible tubing by a pump for determination by a psychrometer at a point removed from the duct. The wet- and dry-bulb thermometers utilized were similar.

Several readings were taken; for purposes of this calculation the dry-bulb reading was 95°F and the wet-bulb reading 80°F.

The moisture content was calculated from the following equations:

(a) $$e_A = e''-0.000367\ P_a\,(t_d - t_w)\,(1 + \frac{tw-32}{1571})$$

$$e_A = 1.032-0.000367\ (30.92''Hg)\ (95-80)\ (1 + \frac{80-32}{1571})$$

$$e_A = 1.032-0.171 = 0.861$$

(b) $$\text{Bw (moisture content)} = \frac{e_A}{P_a} = \frac{0.861}{30.92} \quad 0.024$$

$$= 2.4\%$$

DATA SHEET #3-ECD-E

Date: August 26, 1971

Code: 3-W.O.

Operation: Press #1, 4-color, 1-web, coated paper (50# stock) @ 18,000 iph

Stack samples were obtained from the stack of Press No. 1 with a Mine Safety Appliance, Universal Testing Kit, Model #2, No. 83498. Standardized operating procedures were followed to accurately control both the volume of air sampled and the rate of air flow during the test.

The measurement of gases was conducted through the use of selected gas detector tubes with the following results:

Compound	Concentration (ppm)
Acetaldehyde	25
Aromatic Hydrocarbons, e.g. Xylene	50-100
Carbon Monoxide	Present

Data Sheet #4-ECD

Graphic Arts Technical Foundation
Environmental Control Division
Research Department

Date: August 24, 1971

Plant Code No.: 3 W.O.

Time Period: 10 minutes

Observer: R. R. Gadomski
4-color, 1 web, coated stock
Press #1

Visible Emissions Evaluation

Observation Point 20' from stack
Perpendicular to plume

Stack - Distance From 20' Height 12'

Wind - Speed 5mph Direction NW

Sky Condition Sunny & clear

Fuel Natural gas dryer

Observation began 9:10 am Ended 9:20 am

Density Smoke Tabulation

No Units x Equiv. No. 1 Units

- Units No. 0 -
- Units No. 1/2 -
- Units No. 1 -
- Units No. 1-1/2 -
8 Units No. 2 16
17 Units No. 2-1/2 42.5
15 Units No. 3 45
- Units No. 3-1/2 -
- Units No. 4 -
- Units No. 4-1/2 -
- Units No. 5 -
- -
40 Units 63.5 Equiv. Units

Equiv. Units / Units x 20% = 63.5 / 40 x 20%

32 %Smoke Desnity

Remarks: Readings are reduced to total equivalent of No. 1 smoke as a standard, i.e, percent greater than 20% indicates smoke violation.

	0	15	30	45		0	15	30	45
0	-	3	2-1/2	3	30				
1	2-1/2	2	2	2	31				
2	2.5	2.5	2.5	2.5	32				
3	3	2.5	2.5	3	33				
4	2.5	2	2	2.5	34				
5	3	3	3	3	35				
6	2.5	2.5	2.5	2.5	36				
7	3	3	2.5	2	37				
8	2.5	2	2.5	2	38				
9	3	3	3	3	39				
10	3	-	-	-	40				
11					41				
12					42				
13					43				
14					44				
15					45				
16					46				
17					47				
18					48				
19					49				
20					50				
21					51				
22					52				
23					53				
24					54				
25					55				
26					56				
27					57				
28					58				
29					59				

Data Sheet #4-ECD

Graphic Arts Technical Foundation
Environmental Control Division
Research Department

Date: August 24, 1971

Plant Code No.: 3 W.O.

Time Period: 10 minutes

Observer: R. R. Gadomski
2-color, 2-web, uncoated stock
Press #2

Visible Emissions Evaluation

		0	15	30	45		0	15	30	45
Observation Point 20' from stack										
Perpendicular to plume	0	-	1/2	1/2	1/2	30				
Stack - Distance From 20' Height 10'	1	1	1	1	1	31				
Wind - Speed 5-10 mph Direction N/W	2	1/2	1/2	0	0	32				
Sky Condition Sunny and clear	3	1/2	0	1/2	1	33				
	4	0	1/2	0	1/2	34				
Fuel Natural gas dryer	5	1/2	1/2	1/2	1/2	35				
Observation began 9:50 am Ended 10:00 am	6	1/2	1/2	1/2	1/2	36				
Density Smoke Tabulation	7	1	1	1	1	37				
No Units x Equiv. No. 1 Units	8	1/2	1/2	1/2	1/2	38				
9 Units No. 0 0	9	0	0	1/2	0	39				
22 Units No. 1/2 11	10	0	-	-	-	40				
9 Units No. 1 9	11					41				
- Units No. 1-1/2 -	12					42				
- Units No. 2 -	13					43				
- Units No. 2-1/2 -	14					44				
- Units No. 3 -	15					45				
- Units No. 3-1/2 -	16					46				
- Units No. 4 -	17					47				
- Units No. 4-1/2 -	18					48				
- Units No. 5 -	19					49				
-	20					50				
40 Units 20 Equiv. Units	21					51				
Equiv. Units / Units x 20% = 20/40 x 20%	22					52				
	23					53				
10 %Smoke Desnity	24					54				
Remarks: Readings are reduced to	25					55				
total equivalent of No. 1 smoke as	26					56				
standard. Press is operating within	27					57				
visible standards of law	28					58				
	29					59				

Graphic Arts Technical Foundation
Environmental Control Division
Research Department

Data Sheet #4-ECD

Date: August 25, 1971

Plant Code No.: 3 W.O.

Time Period: 10 minutes

Observer: R. R. Gadomski
2 color, 1 web, coated stock
Press #3

Visible Emissions Evaluation

Observation Point 20' from stack
Perpendicular to plume
Stack - Distance From 20' Height 15'
Wind - Speed 5-10 mph Direction NW
Sky Condition Sunny & clear

Fuel Natural gas dryer
Observation began 1:35 pm Ended 1:45 pm
Density Smoke Tabulation
No Units x Equiv. No. 1 Units
- Units No. 0 -
16 Units No. 1/2 8
24 Units No. 1 24
- Units No. 1-1/2 -
- Units No. 2 -
- Units No. 2-1/2 -
- Units No. 3 -
- Units No. 3-1/2 -
- Units No. 4 -
- Units No. 4-1/2 -
- Units No. 5 -

40 Units 32 Equiv. Units

Equiv. Units / Units x 20% = 32/40 x 20%

16 %Smoke Desnity

Remarks: Press is operating in compliance with visible emission regulations of city.

	0	15	30	45		0	15	30	45
0	-	1/2	1/2	1/2	30				
1	1/2	1	1	1	31				
2	1	1	1	1	32				
3	1/2	1/2	1/2	1	33				
4	1/2	1/2	1/2	1/2	34				
5	1	1	1	1	35				
6	1	1	1	1	36				
7	1	1	1	1	37				
8	1	1	1	1	38				
9	1/2	1/2	1/2	1/2	39				
10	1/2	-	-	-	40				
11					41				
12					42				
13					43				
14					44				
15					45				
16					46				
17					47				
18					48				
19					49				
20					50				
21					51				
22					52				
23					53				
24					54				
25					55				
26					56				
27					57				
28					58				
29					59				

Graphic Arts Technical Foundation
Environmental Control Division
Research Department

Data Sheet #4-ECD

Date: August 26, 1971

Plant Code No.: 3 W.O.

Time Period: 10 minutes

Observer: R. R. Gadomski

4 color, 1 web, coated stock
Press #1

Visible Emissions Evaluation

Observation Point 20' from stack
Perpendicular to plume

Stack - Distance From 20' Height 12'
Wind - Speed 10 mph Direction NW
Sky Condition Sunny, slight overcast

Fuel Natural gas dryer

Observation began ____ Ended ____
Density Smoke Tabulation ____

No Units	x	Equiv. No. 1 Units
5	Units No. 0	0
18	Units No. 1/2	9
15	Units No. 1	15
2	Units No. 1-1/2	3
-	Units No. 2	-
-	Units No. 2-1/2	-
-	Units No. 3	-
-	Units No. 3-1/2	-
-	Units No. 4	-
-	Units No. 4-1/2	-
-	Units No. 5	-
		-

40 Units 27 Equiv. Units

$\frac{\text{Equiv. Units}}{\text{Units}} \times 20\% = \frac{27}{40} \times 20$

13.5% Smoke Desnity

Remarks: Press is operating in compliance with visible emission regulations of city.

	0	15	30	45		0	15	30	45
0	-	1/2	1/2	1	30				
1	1	1.5	1.5	1	31				
2	1	1/2	1/2	1/2	32				
3	1/2	1/2	1/2	1/2	33				
4	0	0	0	1/2	34				
5	1/2	1	1	1/2	35				
6	0	0	1/2	1/2	36				
7	1/2	1/2	1/2	1/2	37				
8	1	1	1	1	38				
9	1	1	1	1	39				
10	1	-	-	-	40				
11					41				
12					42				
13					43				
14					44				
15					45				
16					46				
17					47				
18					48				
19					49				
20					50				
21					51				
22					52				
23					53				
24					54				
25					55				
26					56				
27					57				
28					58				
29					59				

Data Sheet #5-ECD

Test No.: 1
Plant Code No.: 3 W.O.
Sampling Location
Press #1
4-color, 1 web,
coated stock

Graphic Arts Technical Foundation
Environmental Control Division
Research Department
Pittsburgh, Pennsylvania 15213

Date: August 24, 1971
GATF Personnel:
R. R. Gadomski
W. J. Green

Gas Velocity Data

Point No.	Time: 9:20 - 9:45 am			Time: 10:00 - 10:40 am		
	Vel. Head in. H_2O (h)	Temp °F	Velocity ft/sec	Vel. Head in. H_2O (h)	Temp °F	Velocity ft/sec
A-1	0.13	215	24.0	B-1 0.13	215	24.0
A-2	0.15	215	29.3	B-2 0.14	215	27.8
A-3	0.16	215	29.5	B-3 0.15	215	29.3
A-4	0.16	215	29.5	B-4 0.15	215	29.3
A-5	0.16	215	29.5	B-5 0.15	215	29.3
A-6	0.15	215	29.3	B-6 0.14	215	27.8
A-7	0.13	215	24.0	B-7 0.14	215	27.8
A-8	0.13	215	24.0	B-8 0.13	215	24.0
Av.		215	27.4		215	27.4

A. Av. velocity (traverse) ft/sec 27.4
B. Av. velocity (ref. pt.) ft/sec N/A
C. Flue factor A/B N/A
D. Pitot Tube correction factor (if any) None
E. Gas density factory (ref. to air) 1.0
F. Corrected velocity B x C x D x E ft/sec 27.4
G. Area of flue, sq. ft. 3.14
H. Av. flue temp. °F 215
I. Flow rate @ stack cond.
F x G x 60, acfm 5160
J. P_s = 28.94
K. Corrected to std. cond.
Flow rate = $\frac{520 \times I \times P_s}{H + 460 \times 29.92}$, scfm 3900

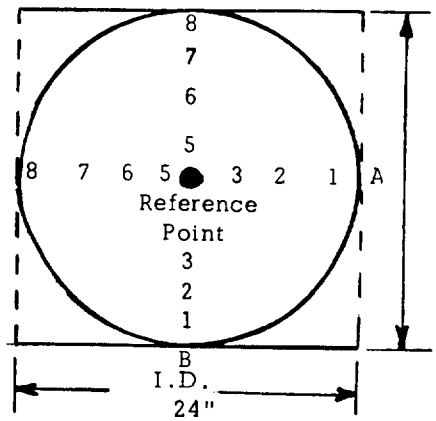

Static (ΔH) "H_2O = 0.12
P_g = - ΔH/13.6 = 0.09
P_{atm} "Hg = 28.94
$P_s = P_{atm} - P_g$ = 28.93

Data Sheet #5-ECD

Test No.: 2
Plant Code No.: 3W.O.
Sampling Location
Press #2
2-color, 2 web,
uncoated stock

Graphic Arts Technical Foundation
Environmental Control Division
Research Department
Pittsburgh, Pennsylvania 15213

Date: 8/24/71
GATF Personnel:
R. R. Gadomski
W. J. Green

Gas Velocity Data

Point No.	Time: 10:50 - 11:00 am			Time: 11:05 - 11:15 am		
	Vel. Head in.H_2O (h)	Temp °F	Velocity ft/sec	Vel. Head in.H_2O (h)	Temp °F	Velocity ft/sec
A-1	0.01	240	7.66	B-1 0.02	240	10.85
A-2	0.01	240	7.66	B-2 0.02	240	10.85
A-3	0.015	240	8.24	B-3 0.02	240	10.85
A-4	0.02	240	10.85	B-4 0.02	240	10.85
A-5	0.02	240	10.85	B-5 0.025	240	12.14
A-6	0.025	240	12.14	B-6 0.03	240	13.30
A-7	0.03	240	13.30	B-7 0.02	240	10.85
A-8	0.02	240	10.85	B-8 0.015	240	8.24
A-9	0.02	240	10.85	B-9 0.01	240	7.66
A-10	0.015	240	8.24	B-10 0.01	240	7.66
Av.		540	10.06		240	10.32

A. Av. velocity (traverse) ft/sec 10.19
B. Av. velocity (ref. pt.) ft/sec N/A
C. Flue factor A/B N/A
D. Pitot Tube correction factor (if any) None
E. Gas density factory (ref. to air) 1.0
F. Corrected velocity B x C x D x E ft/sec 10.19
G. Area of flue, sq. ft. 4.90
H. Av. flue temp. °F 240
I. Flow rate @ stack cond.
F x G x 60, acfm 3000
J. P_s = 28.94
K. Corrected to std. cond.
Flow rate = $\frac{520 \times I \times P_s}{H + 460 \times 29.92}$, scfm 2320

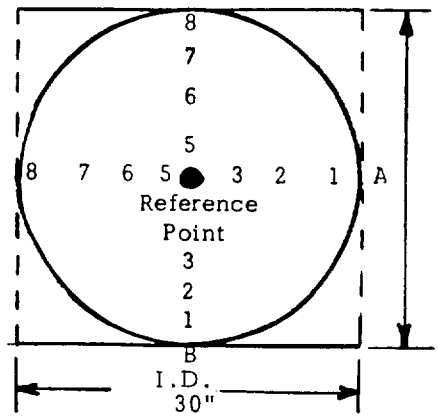

Static (ΔH) "H_2O = 0.03
P_g = - ΔH/13.6 = .0008
P_{atm} "Hg = 28.94
$P_s = P_{atm} - P_g$ = 28.94

Data Sheet #5-ECD

Test No.: 3
Plant Code No.: 3 W.O.
Sampling Location
Press #3
2-color, 1 web
coated stock

Graphic Arts Technical Foundation
Environmental Control Division
Research Department
Pittsburgh, Pennsylvania 15213

Date: August 25, 1971
GATF Personnel:
R. R. Gadomski
W. J. Green

Gas Velocity Data

Point No.	Time: 12:10 - 12: 20 pm			Time: 12:30 - 12:40 pm		
	Vel. Head in.H_2O (h)	Temp °F	Velocity ft/sec	Vel. Head in.H_2O (h)	Temp °F	Velocity ft/sec
A-1	0.06	230	18.5	B-1 0.08	230	21.5
A-2	0.08	230	21.5	B-2 0.09	230	22.9
A-3	0.09	230	22.9	B-3 0.09	230	22.9
A-4	0.10	230	24.0	B-4 0.09	230	22.9
A-5	0.10	230	24.0	B-5 0.10	230	24.0
A-6	0.10	230	24.0	B-6 0.10	230	24.0
A-7	0.10	230	24.0	B-7 0.09	230	22.9
A-8	0.09	230	22.9	B-8 0.09	230	22.9
A-9	0.08	230	21.5	B-9 0.08	230	21.5
A-10	0.06	230	18.5	B-10 0.08	230	21.5
Av.		230	22.2		230	22.7

A. Av. velocity (traverse) ft/sec 22.5
B. Av. velocity (ref. pt.) ft/sec N/A
C. Flue factor A/B N/A
D. Pitot Tube correction factor(if any) None
E. Gas density factory(ref. to air) 1.0
F. Corrected velocity B x C x D x E ft/sec 22.5
G. Area of flue, sq. ft. 5.58
H. Av. flue temp. °F 230
I. Flow rate @ stack cond.
F x G x 60, acfm 7500
J. P_s = 30.00
K. Corrected to std. cond.
Flow rate = $\frac{520 \times I \times P_s}{H + 460 \times 29.92}$, scfm 5600

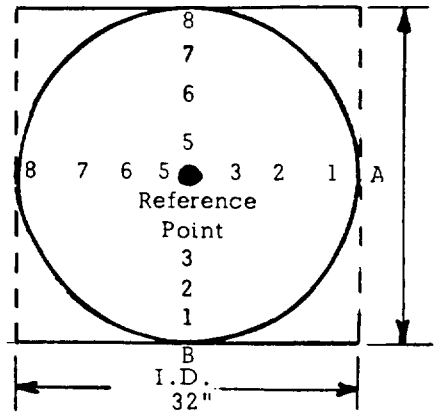

Static (ΔH) "H_2O = 0.03
P_g = - ΔH/13.6 = 0.0008
P_{atm} "H_g = 30.00
$P_s = P_{atm} - P_g$ = 30.00

Approved

OCT 5 - 1971
GATF

CARNEGIE-MELLON UNIVERSITY
MELLON INSTITUTE
RESEARCH SERVICES

PHYSICAL MEASUREMENTS LABORATORY (7615-2)

Fellow Dr. William Green (2)

Account No. Graphic Arts Technical Foundation P. O. #3104

Investigation Air Pollution Program

Investigation No. PML 71-228-3-W.O.

Date of Report September 21, 1971

NATURE OF REPORT: Preliminary ____ Progress ____ Final x

The twenty-four samples of stack gas effluent, which you submitted, have been analyzed by the procedure described in a previous report dated October 2, 1970. The data are tabulated in the attached table.

Paul R. Eisaman
Fellow
Physical Measurements Laboratory

PRE:jdf

R&T: 9/29/71

Form 111

Table I

Stack Gas Samples

(3-WO)

Cylinder No.	1	2	3	4	5	6	7	8	9	10	11	12
Sample Volume, cc NTP	284	268	266	277	270	287	280	281	274	279	284	268
Content, v/v % as CO_2												
Carbon Monoxide	0.0016	trace	trace	ND	trace	trace	trace	trace	trace	ND	ND	ND
Carbon Dioxide	0.7540	0.8848	0.4529	0.4330	0.2809	0.2349	0.3378	0.4079	0.3573	0.3397	0.4126	0.3018
Methane	0.0039	0.0049	0.0049	0.0055	0.0062	0.0048	0.0065	0.0069	0.0058	0.0055	0.0054	0.0037
Organics	0.0042	0.0055	0.0011	0.0011	0.0013	0.0015	0.0027	0.0029	0.0005	0.0005	0.0004	0.0005
Traps	0.1604	0.5922	0.1066	0.1039	0.1333	0.1673	0.1562	0.1718	0.0348	0.0198	0.0190	0.2360

Cylinder No.	13	14	15	16	17	18	19	20	21	22	23	24
Sample Volume, cc NTP	281	289	281	280	266	270	265	278	286	276	256	272
Content, v/v % as CO_2												
Carbon Monoxide	ND	trace	trace	trace	ND	ND	ND	ND	trace	trace	ND	ND
Carbon Dioxide	0.3526	0.4240	0.4746	0.5305	0.3731	0.3955	0.2105	0.2146	0.3780	0.4320	0.0122	0.0278
Methane	0.0037	0.0045	0.0061	0.0064	0.0023	0.0025	0.0017	0.0016	0.0062	0.0073	0.0006	0.0006
Organics	0.0003	0.0006	0.0011	0.0008	0.0008	0.0007	0.0001	0.0003	0.0012	0.0015	0.0000_8	0.0000_2
Traps	0.0780	0.0618	0.0316	0.0401	0.0516	0.0703	0.0604	0.4767	0.1099	0.2822	0.0916	0.0811

ND = Not Detected.

NOV 29 1971

GATE

Approved BMR

CARNEGIE-MELLON UNIVERSITY

MELLON INSTITUTE

RESEARCH SERVICES

Physical Measurements Laboratory (7615-2)

Fellow Dr. William Green

Account No. Graphic Arts Technical Foundation P. O. #3104

Investigation Air Pollution Program

Investigation No. PML 71-228 (3-W.O.)

Date of Report November 23, 1971

NATURE OF REPORT: Preliminary ____ Progress ____ Final X

An arbitrary selection of four traps was made for recalculation of the analytical data. An effort was made to determine the quantity of the high and low boiling material in these traps. The low boilers were assigned to that material which gave a hydrogen flame response at ambient temperature. Once heating of the traps commenced, the hydrogen flame response was assigned to the high boiling material. The results are tabulated in the following table.

Table I

	Traps, Low Boilers		Traps, High Boilers	
Cylinder No.	v/v % as CO_2	Content, %	v/v % as CO_2	Content, %
2	0.0024	0.5	0.4744	99.5
6	0.0347	20.7	0.1327	79.3
9	0.0115	33.0	0.0233	67.0
22	0.0414	14.7	0.2408	85.3

Paul R. Eisaman
Fellow
Physical Measurements Laboratory

PRE:jdf

Form 111

Data Sheet #1-ECD

Graphic Arts Technical Foundation
Environmental Control Division
Research Department
Pittsburgh, Pennsylvania 15213

I. *Source Location Data

1. Firm Name: _____ Phone _____
2. Address: _____
3. Representative(s) Contacted: _____
4. Plant Code No.: 4-W.O.

II. Source and Sample Background Data

5. Date(s) of Test(s): September 28, 29, 30, 1971
6. Process(es) and Basic Equipment (incl. throughput rates): Company operates several web offset presses utilizing several drying variations. Test was conducted on 5-unit Harris-Cottrell press with Offen high velocity dryer.
7. Product(s): Magazine, 4-color advertisement printing
8. Amounts Consumed (Monthly Av.)
   A. Paper or other substrates: Both coated and uncoated paper stocks.
   B. Inks and Solvents: Estimated at 650,000# ink per year usage.
9. Dryer or Oven Equipment:
   A. Type, manufacturer, model: High velocity, Offen, Job No. 6273
   B. Air Flows (rated), Temp.: 2000-10,000 scfm @ 550-600°F air temp.
   C. Fuel or Heat Consumption: 5,780,000 Btu/hr.
   D. Comment: Gas is not metered separately, approximately 50% recirculation is utilized for process printing.
10. Stack Geometry:
   A. No. (Single, manifolded) Single
   B. Cross-sectional area: Diam. = 32", A = 5.30 sq ft
   C. Height above roof: 20 ft.
   D. Approx. running length: 35 ft from dryer exit
   E. Comment: Stack configuration and point of sampling were ideal for conducting test series
11. APC Equipment (if any) None
12. General Comments: Process coupled with high velocity drying presented ideal sampling for purposes of sampling program.

*Restricted use only.

Data Sheet #2-ECD

Test No.: 1
Plant Code No.: 4 W.O.

Graphic Arts Technical Foundation
Environmental Control Division
Research Department
Pittsburgh, Pennsylvania 15213

Test Date: Sept. 28, 1971
Conditions: 4-color
1-web,
perfecting

Physical and Operational Plant Data

Test	Readings			Comments	
Atmospheric Press (ambient)	29.72			Sunny and warm, wind variable, North-north westerly direction	
Temperature (ambient)	75°F				
Relative Humidity (ambient)	50%				
Wind Speed (ambient)	5-10 mph variable				
Ambient Temp. (ambient)	80°F				
db/wb ambient (ambient)	-				
db/wb stack	81°F/73°F				
Flue Gas a) sampl. pt., b) stack exit	@300°F				
APC - Inlet	None				
APC - Outlet	None				
Web (air dryer temp.)	560°F				
Chill Exhaust	80°F				
Oven/Dryer (specify) - Bake Temp.	-				
Static Press Stack "H_2O (ΔH)	0.05				
Atmospheric "H_g	29.36				
Press Drop APC Fan	-				
Press Operating Speed/	7000-15000 iph depending on test requirements				
Web width/sheet dim	-				
# Printing Units/# Plate cyl.	8				
# Colors per side/coat thickness	4 colors				
Type of Paper/Sheet	uncoated/coated				
Grade	-				
Wt. of Paper/Wt. of Coating	60#/40#				
Ink consumption (% coverage)	140# yellow 100# red 129# black 100# blue 469# for 214,000 impressions or 0.0022#/impressions				

Data Sheet #2-ECD

Test No.: 2
Plant Code No.: 4 W.O.

Graphic Arts Technical Foundation
Environmental Control Division
Research Department
Pittsburgh, Pennsylvania 15213

Test Date: Sept. 29, 1971
Conditions: 4-color
1-web,
perfecting

Physical and Operational Plant Data

Test	Readings			Comments	
Atmospheric Press (ambient)	30.00			Sunny & warm. Winds variable. Westerly direction.	
Temperature (ambient)	77°F				
Relative Humidity (ambient)	50%				
Wind Speed (ambient)	5-10 mph				
Ambient Temp. (at site)	80°F				
db/wb ambient	-				
db/wb stack	81°F/73°F				
Flue Gas a) sampl. pt., b) stack exit	315°F				
APC - Inlet	-				
APC - Outlet	-				
Web (air dryer temp.)	560°F				
Chill Exhaust	80°F				
Oven/Dryer (specify) - Bake Temp.	-				
Static Press Stack "H_2O (ΔH)	0.05				
Atmospheric "H_g	29.76				
Press Drop APC Fan	-				
Press Operating Speed/	7000-15000 iph depending on test requirements				
Web width/sheet dim	-				
# Printing Units/# Plate cyl.	8				
# Colors per side/coat thickness	4 colors				
Type of Paper/Sheet	coated				
Grade	-				
Wt. of Paper/Wt. of Coating	40#				
Ink consumption (% coverage)	1297# yellow 928# red 1246# black 1025# blue 4496# for 786,300 impressions or .0057#/imp.				

Data Sheet #3-ECD

Graphic Arts Technical Foundation
Environmental Control Division
Research Department
Pittsburgh, Pennsylvania 15213

Plant Code No. 4 W.O.

Date: 9/28/71

Effluent Sampling Data

Sample #	Time	Period	Probe Configuration	Comments
#1 #2	11:15-11:30	*15 min. *Sample time shortened due to web break on press.	Perpendicular inserted to center of stack dia.	Duplicate samples taken at 90° to each other. 4-color, 1-web, uncoated stock at press speed of 15,000 iph (900 ft/min).
#3 #4	1:15-1:35	20 min.	Perpendicular inserted to center of stack dia.	Duplicate samples of 4-color, 1-web, uncoated stock at press speed of 7000 iph (400 ft/min).
#5 #6	1:45-2:00	15 min.	Perpendicular inserted to center of stack dia.	Duplicate samples of uncoated paper stock at press speed of 7000 iph with no printing. Dryer conditions same as Samples #1-4.

Data Sheet #3-ECD

Graphic Arts Technical Foundation
Environmental Control Division
Research Department
Pittsburgh, Pennsylvania 15213

Plant Code No. 4 W.O.

Date: 9/29/71

Effluent Sampling Data

Sample #	Time	Period	Probe Configuration	Comments
#8 #9	9:52-10:12 am	20 min.	Perpendicular inserted to center of stack dia.	Duplicate samples of 4-color, 1-web coated stock at press speed of 15,000 iph. *Identical ink coverage (same job) as that sampled on 9/28/71; only exception being coated stock.
#10 #11	10:19-10:34 am	15 min.	Perpendicular inserted to center of stack dia.	Duplicate samples of 4-color, 1-web coated stock at press speed of 7000 iph. Same ink coverage as Samples #8 and #9.
#13 #14 #15 #16	11:20-11:30 am 11:40-11:50 am 12:00-12:10 pm 12:10-12:20 pm	10 min. 10 min. 10 min. 10 min.	Perpendicular inserted to center of stack dia.	Individual samples of dryer only, no printing. Dryer temp. same as that for 4-color process printing. Sample #13 taken 5 minutes after process was completed, remainder of samples staggered over time period.
#17 #18	3:15-3:30 pm	15 min	Perpendicular inserted to center of stack dia.	Duplicate samples of 4-color, 1-web coated stock (different ink coverage) at press speed of 7000 iph (400 ft/min.)
#20 #21	4:20-4:40 pm	20 min.	Perpendicular inserted to center of stack dia.	Duplicate samples of 4-color, 1-web coated stock at press speed of 12,000 iph.

Data Sheet #3-ECD

Graphic Arts Technical Foundation
Environmental Control Division
Research Department
Pittsburgh, Pennsylvania 15213

Plant Code No. 4-W.O.

Date: 9/30/71

Effluent Sampling Data

Sample #	Time	Period	Probe Configuration	Comments
#23 #24	8:30-8:50 am	20 min.	Perpendicular inserted to center of stack dia.	Duplicate samples of 4-color, 1-web coated stock at press speed of 15,000 iph (900 ft/min.)
#25 #26	3:30-3:50 pm	20 min.	Same as above	Duplicate samples of 4-color, 1-web coated stock at press speed of 15,000 iph. (900 ft/min.)
#27 #28	4:50-5:05 pm	15 min.	Same as above	Duplicate samples of 4-color, 1-web coated stock at press speed of 15,000 iph; all inks used were reported as solid state type.

DATA SHEET #3-ECD-A
(analytical results in ppm)

Press No.	Date	Process	Cylinder No.	Total Organics	CO	CH_4	CO_2
1	9/28/71	4-color, 1-web uncoated, press speed = 15,000 iph	1	686	trace	48	4562
			2	780	trace	64	5949
	9/28/71	4-color, 1-web uncoated, press speed = 7,000 iph	3	354	trace	64	6126
			4	418	2	67	6269
	9/28/71	Paper only (uncoated stock) no printing	5	86	4	65	6328
			6	47	trace	69	6545
	9/29/71	4-color, 1-web coated, press speed = 15,000 iph	8	433	trace	60	5760
			9	650	6	67	6221
	9/29/71	4-color, 1-web coated stock, press speed = 7,000 iph	10	183	trace	55	6280
			11	180	trace	57	5866
	9/29/71	Dryer only (no printing)	13	68	27	74	7945
			14	51	trace	68	7673
			15	114	trace	61	7948
			16	88	trace	58	7767
	9/29/71	4-color, 1-web coated stock, press speed = 7,000 iph	17	759	7	49	5810
			18	748	trace	48	5503
	9/29/71	4-color, 1-web coated stock, press speed = 12,000 iph	20	2295	trace	48	5660
			21	868	3	39	6305

Data Sheet #3-ECD-A continued

Press No.	Date	Process	Cylinder No.	Total Organics	CO	CO_4	CO_2
1	9/30/71	4-color, 1-web coated stock, press speed = 15,000 iph	23	19	-	8	314
			24	45	-	11	332
	9/30/71	4-color, 1-web coated stock, press speed = 15,000 iph	25	2410	trace	50	5848
			26	1904	trace	47	5533
	9/30/71	4-color, 1-web coated stock, press speed = 15,000 iph (all four-process colors-solid state)	27	2241	14	61	7007
			28	2275	10	62	6956

DATA SHEET #3-ECD-B
(calculated emission rates)

Press No.	Cylinder No.	Total Organics (ppm)	Flow Rate (scfm)	* Organic Emission (lb/hr)
1	1	686	5800	7.55
	2	780	"	8.58
	3	354	"	3.89
	4	418	"	4.60
	5	86	"	0.95
	6	47	"	0.52
	8	433	"	4.76
	9	650	"	7.15
	10	183	"	2.01
	11	180	"	1.98
	13	68	"	0.75
	14	51	"	0.56
	15	114	"	1.25
	16	88	"	0.77
	17	759	6000	8.65
	18	748	"	8.53
	20	2295	"	26.16
	21	868	"	9.89
	23	19	"	0.22
	24	45	"	0.51
	25	2410	"	27.47
	26	1904	"	21.70
	27	2241	"	25.54
	28	2275	"	25.93

*Calculated on the following basis:

$$\text{lb C/hr} = 1.90 \times 10^{-6} \text{ (scfm) (ppm)}$$

DATA SHEET #3-ECD-C
Comparison Calculated and Observed Emission Rates

Cylinder[1] No.	Ink Coverage lb/imp	Press Speed iph	Type of Paper Stock	Emission[2] (calculated)	Emission[3] (observed)	Conversion Factor[4] $E_{obs.}/E_{calc.}$
1 & 2	0.0022	15,000	uncoated	13.95	8.07	0.58
3 & 4	0.0022	7,000	uncoated	6.81	4.25	0.62
8 & 9	0.0022	15,000	coated	13.95	5.96	0.43
10 & 11	0.0022	7,000	coated	6.81	2.00	0.28
17 & 18	0.0057	7,000	coated	16.71	8.59	0.51
20 & 21	0.0057	12,000	coated	28.11	18.03	0.64
25 & 26	0.0057	15,000	coated	34.95	24.59	0.70

(1) Average value of duplicate samples utilized in calculation.
(2) Calculated emission rate inclusive of paper contribution as determined in previous test series.
(3) Based on recorded press data as obtained during test.
(4) Fraction of organics not converted to CO_2 and H_2O in the dryer.

DATA SHEET #3-ECD-D

Moisture Determination Calculation

A wet-and-dry bulb method for determining the proportion of water vapor in the duct gas for the press-dryer combination studied was conducted by drawing gas through flexible tubing by a pump for determination by a psychrometer at a point removed from the duct. The wet-and-dry bulb thermometers utilized were similar.

The dry-bulb reading was 81°F and the wet-bulb reading 73°F.

The moisture content was calculated from the following equations:

(a) $$e_A = e'' - 0.000367\ Pa\ (t_d - t_w)\ (1 + \frac{t_w - 32}{1571})$$

$$e_A = 0.8183 - 0.000367\ (29.76)\ (81-73)\ (1 + \frac{73-32}{1571}$$

$$e_A = 0.8183 - 0.0880 = 0.7303$$

(b) $$Bw\ (\text{moisture content}) = \frac{A}{P_A} = \frac{0.7303}{29.76} = 0.024$$

$$= 2.4\%$$

DATA SHEET #3-ECD-E

Stack samples were taken from the stack of the press dryer combination studies with a Mine Safety Appliance, Universal Testing Kit, Model No. 2, No. 83498. Standardized operating procedures were followed to accurately control both the volume of air samples and the rate of air flow during the test.

The measurement of gases was conducted through the use of selected gas detector tubes with the following results:

Compound	4-color, 1-web coated stock 0.0022 #/imp. 9/29/71 - 9:15 am Concentration (ppm)	4-color, 1-web coated stock 0.0057 #/imp. 9/30/71 - 3:00 pm Concentration (ppm)	*"Solid State" Test 9/30/71 - 4:30 pm Concentration (ppm)
Formaldehyde	9	30	30
Aromatic Hydrocarbons	200	1100	1200
Unsaturated Hydrocarbons	50	150	150
Carbon Monoxide	25	50	50

*Questionable designation, ink analysis indicates a reformulation using refined solvents.

Data Sheet #5-ECD

Test No.: 1
Plant Code No.: 4-W.O.
Sampling Location
4-color, 1-web, perfecting

Graphic Arts Technical Foundation
Environmental Control Division
Research Department
Pittsburgh, Pennsylvania 15213

Date: 9/28/71
GATF Personnel:
R. R. Gadomski
W. J. Green

Gas Velocity Data

Point No.	Time: 10:15-10:30 am			Time: 10:45-11:00 am		
	Vel. Head in.H_2O (h)	Temp °F	Velocity ft/sec	Vel. Head in.H_2O (h)	Temp °F	Velocity ft/sec
A-1	0.11	300	26.4	B-1 0.10	300	24.6
A-2	0.12	300	27.0	B-2 0.11	300	26.4
A-3	0.13	300	28.4	B-3 0.13	300	28.4
A-4	0.13	300	28.4	B-4 0.13	300	28.4
A-5	0.13	300	28.4	B-5 0.13	300	28.4
A-6	0.12	300	27.0	B-6 0.12	300	27.0
A-7	0.11	300	26.4	B-7 0.11	300	26.4
A-8	0.11	300	26.4	B-8 0.10	300	24.6
Av.		300	27.3		300	26.8

A. Av. velocity (traverse) ft/sec 27.0
B. Av. velocity (ref. pt.) ft/sec N/A
C. Flue factor A/B N/A
D. Pitot Tube correction factor(if any) None
E. Gas density factory(ref. to air) 1.0
F. Corrected velocity B x C x D x E ft/sec 27.0
G. Area of flue, sq. ft. 5.30
H. Av. flue temp. °F 300
I. Flow rate @ stack cond.
F x G x 60, acfm 8580
J. P_s = 29.36
K. Corrected to std. cond.
Flow rate = $\frac{520 \times I \times P_s}{H + 460 \times 29.92}$, scfm 5800

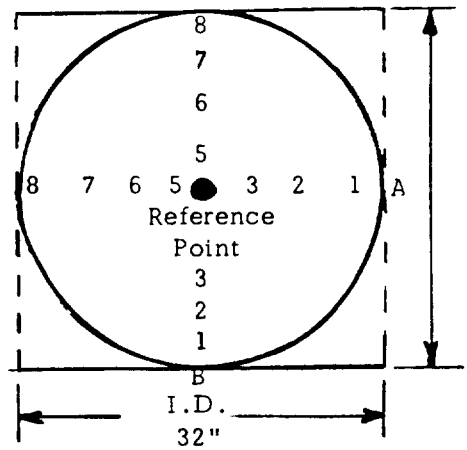

Static (ΔH) "H_2O = 0.05"
P_g = - ΔH/13.6 = 0.004
P_{atm} "Hg = 29.36
$P_s = P_{atm} - P_g$ = 29.36

Data Sheet #5-ECD

Test No.: 2
Plant Code No.: 4-W.O.
Sampling Location
4-color, 1-web,
perfecting

Graphic Arts Technical Foundation
Environmental Control Division
Research Department
Pittsburgh, Pennsylvania 15213

Date: 9/29/71
GATF Personnel:
R. R. Gadomski
W. J. Green

Gas Velocity Data

Point No.	Time: 3:45-3:50 pm			Time: 3:55-4:05 pm		
	Vel. Head in.H_2O (h)	Temp °F	Velocity ft/sec	Vel. Head in.H_2O (h)	Temp °F	Velocity ft/sec
A-1	0.13	315	28.4	B-1 0.12	315	27.0
A-2	0.13	315	28.4	B-2 0.12	315	27.0
A-3	0.13	315	28.4	B-3 0.12	315	27.0
A-4	0.14	315	29.6	B-4 0.12	315	27.0
A-5	0.13	315	28.4	B-5 0.12	315	27.0
A-6	0.13	315	28.4	B-6 0.12	315	27.0
A-7	0.13	315	28.4	B-7 0.12	315	27.0
A-8	0.13	315	28.4	B-8 0.12	315	27.0
Av.		315	28.5		315	27.0

A. Av. velocity (traverse) ft/sec 27.8
B. Av. velocity (ref. pt.) ft/sec N/A
C. Flue factor A/B N/A
D. Pitot Tube correction factor(if any) None
E. Gas density factory(ref. to air) 1.0
F. Corrected velocity B x C x D x E ft/sec 27.8
G. Area of flue, sq. ft. 5.30
H. Av. flue temp. °F 315
I. Flow rate @ stack cond.
F x G x 60, acfm 8820
J. P_s = 29.76
K. Corrected to std. cond.
Flow rate = $\frac{520 \times I \times P_s}{H + 460 \times 29.92}$, scfm 6000

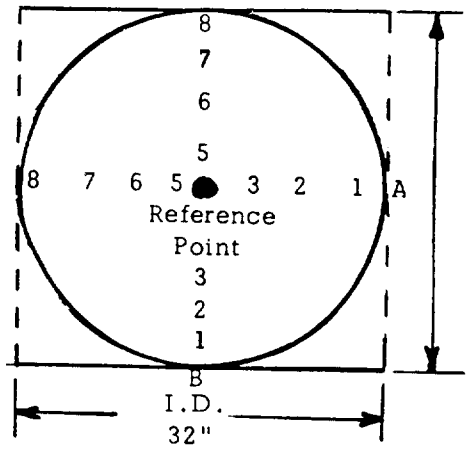

Static (ΔH) "H_2O = 0.05"
P_g = - ΔH/13.6 = 0.004
P_{atm} "Hg = 29.76
$P_s = P_{atm} - P_g$ = 29.76

Approved

NOV 2 - 1971
GATF

CARNEGIE-MELLON UNIVERSITY
MELLON INSTITUTE
RESEARCH SERVICES

Physical Measurements Laboratory (7615-2)

Fellow Dr. William Green (2)

Account No. Graphic Arts Technical Foundation P.O. #3104

Investigation Air Pollution Program

Investigation No. PML 71-233 (4-WO)

Date of Report October 25, 1971

NATURE OF REPORT: Preliminary ____ Progress ____ Final x

The twenty-four samples of stack gas effluent which you submitted, have been analyzed by the procedure described in a previous report dated October 2, 1970. The data are tabulated in the attached table.

Paul R. Eisaman
Fellow
Physical Measurements Laboratory

PRE:jdf

R&T: 10/29/71

Form 111

Table I

Stack Gas Samples

(4-WO)

Cylinder No.	1	2	3	4	5	6	8	9	10	11	13	14
Sample Volume, cc NTP	207	220	261	269	247	263	275	274	271	275	250	262
Content, v/v % as CO_2												
Carbon Monoxide	trace	trace	trace	0.0002	0.0004	trace	trace	0.0006	trace	trace	0.0027	trace
Carbon Dioxide	0.4562	0.5949	0.6126	0.6269	0.6328	0.6545	0.5760	0.6221	0.6280	0.5866	0.7945	0.7673
Methane	0.0048	0.0064	0.0064	0.0067	0.0065	0.0069	0.0060	0.0067	0.0055	0.0057	0.0068	0.0065
Organics	0.0006	0.0011	0.0008	0.0006	0.0006	0.0007	0.0007	0.0007	0.0006	0.0006	0.0006	0.0003
Traps	0.0680	0.0769	0.0346	0.0412	0.0080	0.0040	0.0426	0.0643	0.0177	0.0174	0.0062	0.0048

Cylinder No.	15	16	17	18	20	21	23	24	25	26	27	28
Sample Volume, cc NTP	263	265	261	270	277	263	244	277	266	263	264	267
Content, v/v % as CO_2												
Carbon Monoxide	trace	trace	0.0007	trace	trace	0.0003	---	---	trace	trace	0.0014	0.0010
Carbon Dioxide	0.7948	0.7767	0.5810	0.5503	0.5660	0.6305	0.0314	0.0332	0.5848	0.5533	0.7007	0.6956
Methane	0.0061	0.0058	0.0049	0.0048	0.0048	0.0039	0.0008	0.0011	0.0050	0.0047	0.0061	0.0062
Organics	0.0004	0.0006	0.0006	0.0008	0.0012	0.0013	0.0001	0.0001	0.0018	0.0020	0.0011	0.0020
Traps	0.0110	0.0082	0.0753	0.0740	0.2283	0.0855	0.0018	0.0044	0.2392	0.1884	0.2230	0.2255

Approved PBM

NOV 29 1971
GATF

CARNEGIE-MELLON UNIVERSITY
MELLON INSTITUTE
RESEARCH SERVICES

Physical Measurements Laboratory (7615-2)

Fellow Dr. William Green

Account No. Graphic Arts Technical Foundation P.O. #3104

Investigation Air Pollution Program

Investigation No. PML 71-233 (4-W.O.)

Date of Report November 23, 1971

NATURE OF REPORT: Preliminary ____ Progress ____ Final X

The following data illustrates the quantity of high and low boiling components collected in the trap portion of the stack-gas sampling apparatus. The low boiling portion is defined as that fraction of material which is eluted from the trap at ambient temperature. The high boiling portion is that material which elutes above ambient temperature. The results are tabulated in the following table.

Table I

Cylinder No.	Traps, Low Boiling		Traps, High Boiling	
	v/v% as CO_2	Content, %	v/v% as CO_2	Content, %
15	0.0004	3.18	0.0107	96.82
16	0.0003	3.52	0.0079	96.48
20	0.0084	3.70	0.2199	96.30

Paul R. Eisaman

Paul R. Eisaman, Fellow
Physical Measurements Laboratory

PRE:jdf

Form 111

Data Sheet #1-ECD

Graphic Arts Technical Foundation
Environmental Control Division
Research Department
Pittsburgh, Pennsylvania 15213

I. *Source Location Data

1. Firm Name: _____ Phone _____
2. Address: _____
3. Representative(s) Contacted: _____
4. Plant Code No.: 5-W.O.

II. Source and Sample Background Data

5. Date(s) of Test(s): October 19, 1971
6. Process(es) and Basic Equipment (incl. throughput rates): One web offset 4-unit perfecting (8-color) Hantscho press with TEC Systems high velocity hot air dryer.
7. Product(s): Publication printing
8. Amounts Consumed (Monthly Av.)
   A. Paper or other substrates: Utilize both coated and uncoated stock
   B. Inks and Solvents: Company formulated inks (1- to 4-color process work).
9. Dryer or Oven Equipment:
   A. Type, manufacturer, model: High velocity hot air, TEC Systems, Inc.
   B. Air Flows (rated), Temp.: Model #LA 13, Serial #206, 2 pass
   C. Fuel or Heat Consumption: Not known
   D. Comment: Modern drying system utilizing latest engineering design
10. Stack Geometry:
   A. No. (Single, manifolded) Single
   B. Cross-sectional area: (2' x 3') 6 sq ft
   C. Height above roof: 4 feet
   D. Approx. running length: 30 feet to roof top
   E. Comment: Stack gas exits vertically to roof level, then makes 90° bend and horizontally enters air pollution control equipment.
11. APC Equipment (if any) Model S-50 smoke abator, manufactured by Skinner Engineering Co., rated at 5000 scfm, about 1-1/2 yrs old.
12. General Comments: Process studied reflected current engineering practice and presented good conditions for sampling.

*Restricted use only.

Data Sheet #2-ECD

Test No. 1
Plant Code No. 5-W.O.

Graphic Arts Technical Foundation
Environmental Control Division
Research Department
Pittsburgh, Pennsylvania 15213

Test Date: 10/19/71
Conditions 4-color, 1-web perfecting printing

Physical and Operational Plant Data

	Reading/Comments
Atmospheric pressure	29.98 Excellent day for testing,
Temperature	84°F winds southerly and
Relative humidity	50% variable sunny and warm.
Wind speed	10-20 mph
Ambient temperature	80°F
db/wb ambient	--
db/wb stack	--
Flue gas - a) sampling point	240°F
b) stack exit	
APC - Inlet	240°F
APC - Outlet	1000-1350°F-depending on test conditions
Web	--
Chill Exhaust	--
Oven/Dryer (specify) - bake temperature	--
Static press stack "H_2O (ΔH)	5.0
Atmospheric "Hg	29.98
Press drop APC fan	--
Press operating speed	14000 iph
Web width/sheet dimensions	46-3/8"
No. printing units/No. plate cylinders	4 units
No. colors per side/coat thickness	4 colors per side (perfecting)
Type of paper/sheet	coated
Grade	
Wt. of paper/wt. of coating	50# (consolidated)
Ink Consumption	0.0054 #/impression
*Capital cost of control equipment	$14,000 (unit only)
*Installation cost (incl. ducting and site preparations)	$ 6,000
*Operational cost (gas consumption only)	$ 1,000 per month

*Above figures obtained from plant management personnel and represent best estimates available. Operational cost does not reflect maintenance performed on unit (i.e., new linings, etc.)

Data Sheet #3-ECD

Graphic Arts Technical Foundation
Environmental Control Division
Research Department
Pittsburgh, Pennsylvania 15213

Plant Code No. 5-W.O.

Date: 10/19/71

Effluent Sampling Data

Sample #	Time	Period	Probe Configuration	Comments
1 and 2	10:25-10:45	20 min.	Straight perpendicular to duct	Duplicate samples taken at inlet to control equipment of 4-color, 1-web (perfecting), press control speed of 14,000 iph (at outset of test series).
3 and 4	11:00-11:15	15 min.	Same	Sample taken at outlet of control equipment at temp. of 1000°F.
	11:15-11:30	15 min.	Same	Same as Sample No. 3.
5 and 6	1:15-1:1:30	15 min.	Same	Sample taken at outlet of control equipment at temp. of 1200°F.
	1:35-1:50	15 min.	Same	Same as Sample No. 5
7 and 8	2:20-2:35	15 min.	Same	Sample taken at outlet of control equipment at temp. of 1300°F.
	2:40-2:55	15 min.	Same	Same as Sample No. 7.
9 and 10	3:10-3:25	15 min.	Same	Sample taken at outlet of control equipment at temp. of 1350°F.
	3:30-3:45	15 min.	Same	Same as Sample No. 9.
*11 and 12	4:00-4:20	20 min.	Same	Duplicate samples taken at inlet to control equipment of 4-color, 1-web (perfecting) at press speed of 14,000 iph (at conclusion of test series).

*Samples No. 11 and 12 may be suspect; press shutdown occurred at unknown time during sampling period.

DATA SHEET #3-ECD-A
(analytical results in ppm)

Plant Code No.	Date	Process	Cylinder No.	Total Organics	CO	CH_4	CO_2
5-W.O.	10/19/71	4-color, 1-web coated stock, press speed = 14,000 iph	1	1919	trace	7	5013
			2	1920	trace	7	5102
	10/19/71	4-color, 1-web coated stock, press speed = 14,000 iph	**11	1402	trace	7	4926
			**12	558	not detected	4	2680
	10/19/71	Outlet of control equipment @ T = 1000°F	3	102	191	13	24699
			*4	10,127	255	14	24452
	10/19/71	Outlet of control equipment @ T = 1200°F	5	57	89	11	29918
			6	151	118	11	29031
	10/19/71	Outlet of control equipment @ T = 1300°F	7	14	4	6	29881
			8	23	45	6	32646
	10/19/71	Outlet of control equipment @ T = 1350°F	9	18	111	6	32202
			10	48	163	7	31257

Sample result suspect; possible contact with trichloroethylene slurry during sampling period.

**Samples suspect, press shutdown occurred at unknown time during sampling period.

DATA SHEET #3-ECD-B
(Calculated Emission Rates)

Plant Code No.	Cylinder No.	Total Organics (ppm)	Flow Rate (scfm)	Organic Emission (lb/hr)
5-W.O.	1	1919	6350	22.80
	2	1920	"	22.80
	3	102	"	1.20
	4	*	"	*
	5	57	"	0.68
	6	151	"	1.81
	7	14	"	0.17
	8	23	"	0.28
	9	18	"	0.22
	10	48	"	0.58
	11	**	"	**
	12	**	"	**

*Sample invalidated.
**Sample result suspect due to press operational difficulty.

DATA SHEET #3-ECD-C
Comparison of Calculated and Observed Emission Rates

Plant Code No.	Type of Dryer	Cylinder[1] No.	Emission[2] (calc.)	Emission[3] (obs.)	C Value[4] E_{obs}/E_{calc}
5-W.O.	High Velocity Hot Air	1 & 2	30.99	22.80	0.73

(1) Average value of duplicate samples utilized in calculation.
(2) Calculated emission rate inclusive of paper contribution as determined in previous test series.
(3) Based on recorded press data as obtained during test.
(4) Fraction of organics not converted to CO_2 and H_2O in the dryer.

DATA SHEET #3-ECD-D

Calculated Organics Conversion at Various Incineration Temperature
(Expressed as % Efficiency)

Plant Code No.	Incineration Temp. (°F)	Inlet[1] Concentration (ppm)	Outlet[2] Concentration (ppm)	% Efficiency[3] (calc.)
5-W.O.	1000	1919	102	94.61
	1200	1919	57 & 151	97.01 & 92.14
	1300	1919	14 & 23	99.27 & 98.80
	1350	1919	18 & 98	99.10 & 97.49

(1) Average value of duplicate samples utilized to establish inlet concentration.
(2) Individual sample result as taken from lab analysis report.
(3) Equation utilized for computing % efficiency as follows:

$$\% \text{ efficiency} = 100 - \frac{\text{outlet C ppm} \times 100}{\text{inlet C ppm}}$$

DATA SHEET #3-ECD-E

Stack samples were taken from the stacks of the press-dryer-incinerator combination studies with a Mine Safety Appliance, Universal Testing Kit, Model No. 21, No. 83498. Standard operation procedures were followed to accurately control both the volume of air samples and the rate of air flow during the test.

The measurement of gases was conducted through the use of a selected gas detector tube for NO_2 (nitrogen dioxide) with the following results:

Plant Code No.	Conditions	Incinerator Temp. (°F)	NO_2 Concentration (ppm)
5-W.O. (10/19/71)	4-color, 1-web coated stock 0.0054 #/imp high velocity hot air dryer	1000	10
		1200	14
		1300	20
		1350	30

Data Sheet #5-ECD

Test No.: 1
Plant Code No.: 5-W.O.
Sampling Location
Inlet to control equipment

Graphic Arts Technical Foundation
Environmental Control Division
Research Department
Pittsburgh, Pennsylvania 15213

Date: Oct. 19, 1971
GATF Personnel:
R. R. Gadomski
W. J. Green

Gas Velocity Data

Point No.	Time: 9:00-9:15 am			Time: 9:15-9:30 am		
	Vel. Head in. H_2O (h)	Temp °F	Velocity ft/sec	Vel. Head in. H_2O (h)	Temp °F	Velocity ft/sec
A-1	0.09	240	23.2	B-1 0.10	240	24.0
A-2	0.09	240	23.2	B-2 0.10	240	24.0
A-3	0.10	240	24.0	B-3 0.11	240	25.2
A-4	0.11	240	25.2	B-4 0.12	240	26.4
A-5	0.12	240	26.4	B-5 0.12	240	26.4
A-6	0.11	240	25.2	B-6 0.11	240	25.2
Av.		240	24.4		240	25.2

A. Av. velocity (traverse) ft/sec 24.8
B. Av. velocity (ref. pt.) ft/sec N/A
C. Flue factor A/B N/A
D. Pitot Tube correction factor (if any) None
E. Gas density factory (ref. to air) 1.0
F. Corrected velocity B x C x D x E ft/sec 24.8
G. Area of flue, sq. ft. 6.00
H. Av. flue temp. °F 240
I. Flow rate @ stack cond.
F x G x 60, acfm 8900
J. P_s = 29.68
K. Corrected to std. cond.
Flow rate = $\frac{520 \times I \times P_s}{H + 460 \times 29.92}$, scfm 6350

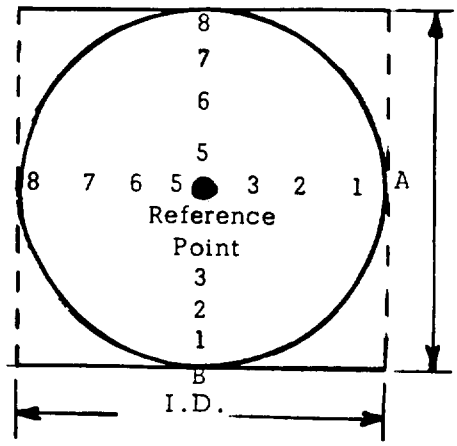

Static (ΔH) "H_2O = 4.0
P_g = $-\Delta H/13.6$ = .30
P_{atm} "H_g = 29.98
$P_s = P_{atm} - P_g$ = 29.68

Approved PRR

NOV 29 1971
GATF

CARNEGIE-MELLON UNIVERSITY
MELLON INSTITUTE
RESEARCH SERVICES

Physical Measurements Laboratory (7615-2)

Fellow Dr. William Green

Account No. Graphic Arts Technical Foundation P. O. #3104

Investigation Air Pollution Program

Investigation No. PML 71-234 (5-W.O)/(6-W.O.)

Date of Report November 23, 1971

NATURE OF REPORT: Preliminary ____ Progress ____ Final x

The twenty-two samples of stack gas effluent which you submitted have been analyzed by the procedure described in a previous report dated October 2, 1970. The data are tabulated in the attached table.

Paul R. Eisaman
Fellow
Physical Measurements Laboratory

PRE:jdf

Form 111

Table I

Stack Gas Samples

(5-WO)/(6-WO)

Cylinder No.	1	2	11	12	15	16	20	21	3	4	5	6
Sample Volume, cc NTP	265	256	257	269	280	277	281	284	258	265	238	269
Content, v/v % as CO_2												
Carbon Monoxide	trace	trace	trace	ND	ND	ND	ND	ND	0.0191	0.0255	0.0089	0.0118
Carbon Dioxide	0.5013	0.5102	0.4926	0.2680	0.3420	0.3335	0.1215	0.2943	2.4699	2.4452	2.9918	2.9031
Methane	0.0007	0.0007	0.0007	0.0004	0.0008	0.0007	0.0002	0.0007	0.0013	0.0014	0.0011	0.0011
Organics	0.0032	0.0023	0.0033	0.0016	0.0004	0.0009	ND	0.0005	0.0090	0.0078	0.0052	0.0118
Traps, Low Boilers	0.0248	0.0115	0.0031	0.0102	0.0119	0.0095	0.0000	0.0024	0.0010	1.0013	0.0003	0.0003
Traps, High Boilers	0.1639	0.1782	0.1338	0.0440	0.0174	0.0080	0.0002	0.0092	0.0002	0.0036	0.0002	0.0030

Cylinder No.	7	8	9	10	13	14	17	18	19	22
Sample Volume, cc NTP	259	261	257	257	278	267	271	264	269	284
Content, v/v % as CO_2										
Carbon Monoxide	0.0004	0.0045	0.0111	0.0163	ND	ND	trace	trace	0.0035	0.0024
Carbon Dioxide	2.9881	3.2646	3.2202	3.1257	3.2419	3.2157	2.6644	2.4093	2.2655	2.1643
Methane	0.0006	0.0006	0.0006	0.0007	0.0001	0.0002	0.0019	0.0009	0.0023	0.0020
Organics	0.0014	0.0023	0.0016	0.0048	ND	ND	0.0002	ND	0.0018	0.0023
Traps, Low Boilers	0.0000	0.0000	0.0000	0.0000	0.2321	0.0000	0.0000	0.0000	0.0000	0.0001
Traps, High Boilers	0.0000	0.0000	0.0002	0.0000	0.0000	0.0000	0.0000	0.0000	0.0000	0.0005

ND = Not Detected.

Data Sheet #1-ECD

Graphic Arts Technical Foundation
Environmental Control Division
Research Department
Pittsburgh, Pennsylvania 15213

I. *Source Location Data

1. Firm Name: _____ Phone _____
2. Address: _____
3. Representative(s) Contacted: _____
4. Plant Code No.: 6-W.O.

II. Source and Sample Background Data

5. Date(s) of Test(s): October 20, 1971
6. Process(es) and Basic Equipment (incl. throughput rates): Hantscho 4-unit perfecting, web offset press with Offen multi-stage (direct-flame hot air) dryer.
7. Product(s): Publication, advertisement
8. Amounts Consumed (Monthly Av.)
   A. Paper or other substrates: Offset or enameled grade
   B. Inks and Solvents: 1- to 4-color printing
9. Dryer or Oven Equipment:
   A. Type, manufacturer, model: Direct flame, hot air, Offen No. 6454
   B. Air Flows (rated), Temp.: None available
   C. Fuel or Heat Consumption: None available
   D. Comment: None
10. Stack Geometry:
   A. No. (Single, manifolded) Single
   B. Cross-sectional area: 24" duct, 3.14 sq ft
   C. Height above roof: 4 to 6 feet
   D. Approx. running length: 20 to 30 feet
   E. Comment: Stack gas exits vertically to roof level then makes a 90° bend and horizontally enters air pollution control equipment.
11. APC Equipment (if any) B. Offen designed afterburner; about 1-1/2 yrs old; capacity to 12,000 scfm.
12. General Comments: Physical arrangement of control equipment on roof presented a difficult sampling assignment.

*Restricted use only.

Data Sheet #2-ECD

Test No. 2
Plant Code No. 6-W.O.

Graphic Arts Technical Foundation
Environmental Control Division
Research Department
Pittsburgh, Pennsylvania 15213

Test Date: 10/20/71
Conditions 4-color, 1-web perfecting

Physical and Operational Plant Data

	Reading/Comments
Atmospheric pressure Temperature Relative humidity Wind speed	29.97 78°F 70% 10-15 mph Excellent conditions for sampling, winds variable, south, south westerly, sunny and warm.
Ambient temperature db/wb ambient db/wb stack Flue gas - a) sampling point b) stack exit APC - Inlet APC - Outlet Web Chill Exhaust Oven/Dryer (specify) - bake temperature	75°F -- -- 210°F 210°F 1000°F-1300°F-depending on test conditions -- --
Static press stack "H_2O (ΔH) Atmospheric "Hg Press drop APC fan	4.0 29.97 --
Press operating speed Web width/sheet dimensions No. printing units/No. plate cylinders No. colors per side/coat thickness	9000 iph -- 4-units 4 colors per side
Type of paper/sheet Grade Wt. of paper/wt. of coating	offset stock coated 50#
Ink Consumption *Capital cost of control equipment *Installation cost (incl. ducting, site preparation and supporting structures) *Operational cost (gas consumption only)	0.0015 lb/impression $15,000 (unit only) $ 6,000 $1,200 per month

*Above figures obtained from plant management personnel and represents best estimate available. Operational cost does not reflect maintenance performed on unit (i.e. new linings, etc.)

Data Sheet #3-ECD

Graphic Arts Technical Foundation
Environmental Control Division
Research Department
Pittsburgh, Pennsylvania 15213

Plant Code No. 6-W.O.

Date: 10/20/71

Effluent Sampling Data

Sample #	Time	Period	Probe Configuration	Comments
13 and 14	11:45-12:00 12:15-12:30	15 min. 15 min.	Perpendicular and inserted into control equipment outlet.	Samples taken at outlet of control equipment at temp. of 1300°F. (Due to difficult sampling location, samples were taken individually.)
15 and 16	11:55-12:15	20 min.	Perpendicular and inserted to center of stack inlet	Samples taken at inlet to control equipment of 4-color, 1-web perfecting, at press speed of 9000 iph.
17 and 18	12:35-12:50 12:55-1:10	15 min. 15 min.	Perpendicular and inserted into control equipment.	Samples taken at outlet of control equipment at temp. of 1200°F. Same as Sample No. 17
19 and 22	2:40-2:55 2:20-2:35	15 min. 15 min.	Perpendicular and inserted into control equipment outlet.	Sample taken at outlet of control equipment at temp. of 1000°F. Same as Sample No. 19
*20 and *21	3:10-3:30	20 min.	Perpendicular and inserted to center of stack inlet.	Samples taken of inlet to control equipment of 4-color, 1-web perfecting press at press speed of 9000 iph.

*Samples No. 20 and 21 may be suspect; web break occurred at unknown time during sampling period.

DATA SHEET #3-ECD-A
(analytical results in ppm)

Plant Code No.	Date	Process	Cylinder No.	Total Organics	CO	CH_4	CO_2
6-W.O.	10/20/71	4-color, 1-web offset stock (coated) press speed = 9000 iph	15	297	not detected	8	3420
			16	187	not detected	7	3335
	10/20/71	4-color, 1-web offset stock (coated) press speed = 9000 iph	**20	2	not detected	2	1215
			**21	121	not detected	7	2943
	10/20/71	Outlet of control equipment @ T = 1000°F	19	18	35	23	22655
			22	29	24	20	21643
	10/20/71	Outlet of control equipment @ T = 1200°F	17	2	trace	19	26644
			18	0	trace	9	24093
	10/20/71	Outlet of control equipment @ T = 1300°F	*13	2321	not detected	1	32419
			14	0	not detected	2	32157

*Sample result suspect; possible contact with trichloroethylene slurry during sampling period.

**Samples suspect; press shutdown occurred at unknown time during sampling period.

DATA SHEET #3-ECD-B
(Calculated Emission Rates)

Plant Code No.	Cylinder No.	Total Organics (ppm)	Flow Rate (scfm)	Organic Emission (lb/hr)
6-W.O.	13	*	5100	*
	14	0.00***	"	***
	15	297	"	2.88
	16	184	"	1.78
	17	2	"	0.019
	18	0.00***	"	***
	19	18	"	0.17
	20	**	"	**
	21	**	"	**
	22	29	"	0.28

*Sample invalidated.
**Sample result suspect due to press operational difficulty.
***Not detectable within experimental error.

DATA SHEET #3-ECD-C
Comparison of Calculated and Observed Emission Rates

Plant Code No.	Type of Dryer	Cylinder(1) No.	Emission(2) (calc.)	Emission(3) (obs.)	C Value(4) E_{obs}/E_{calc}
6-W.O.	Direct Flame Hot Air	15 & 16	5.85	2.33	0.40

(1) Average value of duplicate samples utilized in calculation.
(2) Calculated emission rate inclusive of paper contribution as determined in previous test series.
(3) Based on recorded press data as obtained during test.
(4) Fraction of organics not converted to CO_2 and H_2O in the dryer.

DATA SHEET #3-ECD-D

Calculated Organics Conversion at Various Incineration Temperature
(Expressed as % Efficiency)

Plant Code No.	Incineration Temp. (°F)	Inlet(1) Concentration (ppm)	Outlet(2) Concentration (ppm)	% Efficiency(3) (calc.)
6-W.O.	1000	240	18 & 29	92.50 & 87.90
	1200	240	2 & 0.0	99.17 & 100.00
	1300	240	0.0	100.00

(1) Average value of duplicate samples utilized to establish inlet concentration.
(2) Individual sample result as taken from lab analysis report.
(3) Equation utilized for computing % efficiency as follows:

$$\% \text{ efficiency} = 100 - \frac{\text{outlet C ppm} \times 100}{\text{inlet C ppm}}$$

DATA SHEET #3-ECD-E

Stack samples were taken from the stacks of the press-dryer-incinerator combination studies with a Mine Safety Appliance, Universal Testing Kit, Model No. 21, No. 83498. Standard operating procedures were followed to accurately control both the volume of air samples and the rate of air flow during the test.

The measurement of gases was conducted through the use of a selected gas detector tube for NO_2 (nitrogen dioxide) with the following results:

Plant Code No.	Conditions	Incinerator Temp. (°F)	NO_2 Concentration (ppm)
6-W.O. (10/20/71)	4-color, 1-web off-set stock (coated) 0.0015 #/imp . direct flame hot air dryer	1000	1
		1200	2
		1300	4
		1350	(no reading taken at this temp.)

Data Sheet #5-ECD

Test No.: 2
Plant Code No.: 6-W.O.
Sampling Location
Inlet to control equipment

Graphic Arts Technical Foundation
Environmental Control Division
Research Department
Pittsburgh, Pennsylvania 15213

Date: Oct. 20, 1971
GATF Personnel:
R. R. Gadomski
W. J. Green

Gas Velocity Data

Point No.	Time: 10:20-10:30 am			Time: 10:35-10:40 am		
	Vel. Head in. H_2O (h)	Temp °F	Velocity ft/sec	Vel. Head in. H_2O (h)	Temp °F	Velocity ft/sec
A-1	.19	210	34.8	B-1 .19	210	34.8
A-2	.19	210	34.8	B-2 .19	210	34.8
A-3	.20	210	36.2	B-3 .20	210	36.2
A-4	.20	210	36.2	B-4 .20	210	36.2
A-5	.19	210	34.8	B-5 .19	210	34.8
A-6	.19	210	34.8	B-6 .19	210	34.8
Av.		210	35.3		210	35.3

A. Av. velocity (traverse) ft/sec 35.3
B. Av. velocity (ref. pt.) ft/sec N/A
C. Flue factor A/B N/A
D. Pitot Tube correction factor (if any) None
E. Gas density factory (ref. to air) 1.0
F. Corrected velocity B x C x D x E ft/sec
G. Area of flue, sq. ft. 3.14
H. Av. flue temp. °F 210
I. Flow rate @ stack cond.
F x G x 60, acfm 6650
J. P_s = 29.67
K. Corrected to std. cond.
Flow rate = $\frac{520 \times I \times P_s}{H + 460 \times 29.92}$, scfm 5100

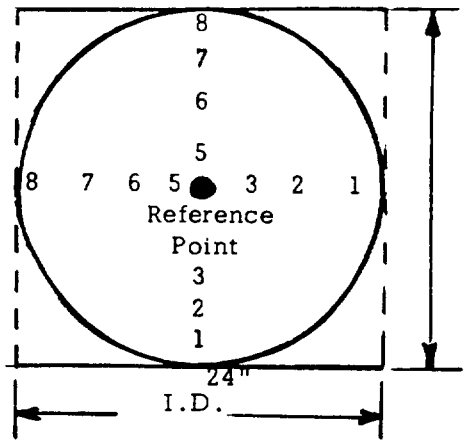

Static (ΔH) "H_2O = 4.0
P_g = $-\Delta H/13.6$ = 0.30
P_{atm} "Hg = 29.97
$P_s = P_{atm} - P_g$ = 29.67

Approved PAR

NOV 29 1971
GATE

CARNEGIE-MELLON UNIVERSITY
MELLON INSTITUTE
RESEARCH SERVICES

Physical Measurements Laboratory (7615-2)

Fellow Dr. William Green

Account No. Graphic Arts Technical Foundation P. O. #3104

Investigation Air Pollution Program

Investigation No. PML 71-234 (5-WO)/(6-WO)

Date of Report November 23, 1971

NATURE OF REPORT: Preliminary ____ Progress ____ Final x

The twenty-two samples of stack gas effluent which you submitted have been analyzed by the procedure described in a previous report dated October 2, 1970. The data are tabulated in the attached table.

Paul R. Eisaman
Fellow
Physical Measurements Laboratory

PRE:jdf

Form 111

Table I

Stack Gas Samples

(5-WO)/(6-WO)

Cylinder No.	1	2	11	12	15	16	20	21	3	4	5	6
Sample Volume, cc NTP	265	256	257	269	280	277	281	284	258	255	238	269
Content, v/v % as CO_2												
Carbon Monoxide	trace	trace	trace	ND	ND	ND	ND	ND	0.0191	0.0255	0.0089	0.0118
Carbon Dioxide	0.5013	0.5102	0.4926	0.2680	0.3420	0.3335	0.1215	0.2943	2.4699	2.4452	2.9918	2.9031
Methane	0.0007	0.0007	0.0007	0.0004	0.0008	0.0007	0.0002	0.0007	0.0013	0.0014	0.0011	0.0011
Organics	0.0032	0.0023	0.0033	0.0016	0.0004	0.0009	ND	0.0005	0.0090	0.0078	0.0052	0.0118
Traps, Low Boilers	0.0248	0.0115	0.0031	0.0102	0.0119	0.0095	0.0000	0.0024	0.0010	1.0013	0.0003	0.0003
Traps, High Boilers	0.1639	0.1782	0.1338	0.0440	0.0174	0.0080	0.0002	0.0092	0.0002	0.0036	0.0002	0.0030

Cylinder No.	7	8	9	10	13	14	17	18	19	22
Sample Volume, cc NTP	259	261	257	257	278	267	271	264	269	284
Content, v/v % as CO_2										
Carbon Monoxide	0.0004	0.0045	0.0111	0.0163	ND	ND	trace	trace	0.0035	0.0024
Carbon Dioxide	2.9881	3.2646	3.2202	3.1257	3.2419	3.2157	2.6644	2.4093	2.2655	2.1643
Methane	0.0006	0.0006	0.0006	0.0007	0.0001	0.0002	0.0019	0.0009	0.0023	0.0020
Organics	0.0014	0.0023	0.0016	0.0048	ND	ND	0.0002	ND	0.0018	0.0023
Traps, Low Boilers	0.0000	0.0000	0.0000	0.0000	0.2321	0.0000	0.0000	0.0000	0.0000	0.0001
Traps, High Boilers	0.0000	0.0000	0.0002	0.0000	0.0000	0.0000	0.0000	0.0000	0.0000	0.0005

ND = Not Detected.

Data Sheet #1-ECD

Graphic Arts Technical Foundation
Environmental Control Division
Research Department
Pittsburgh, Pennsylvania 15213

I. *Source Location Data

1. Firm Name: _____ Phone _____
2. Address: _____
3. Representative(s) Contacted: _____
4. Plant Code No.: 7-W.O.

II. Source and Sample Background Data

5. Date(s) of Test(s): November 9, 10, 11
6. Process(es) and Basic Equipment (incl. throughput rates): Two press lines, Press #1 ATF 4-unit, perfecting web offset with Offen multi-stage dryer, Press #2 Goss 5-unit, perfecting web offset Offenair Jet Dryer.
7. Product(s): Publication and advertisement printing
8. Amounts Consumed (Monthly Av.)
   A. Paper or other substrates: Coated and uncoated stocks
   B. Inks and Solvents: 1- to 4-color process work
9. Dryer or Oven Equipment:
   A. Type, manufacturer, model: Press #1-multistage (Offen), #2 Offenair #6456
   B. Air Flows (rated), Temp.: None available
   C. Fuel or Heat Consumption: Natural gas, no separate metering
   D. Comment: Press line #1 utilizes old type Offen dryer system, Press #2 reflects modern generation of Offen dryers.
10. Stack Geometry:
   A. No. (Single, manifolded) Each press individually exhausts to single stack.
   B. Cross-sectional area: Press #1-7.11 sq ft; Press #2-14.00 sq ft.
   C. Height above roof: 50 to 100 ft depending on stack in consideration
   D. Approx. running length: 30-50 ft.
   E. Comment: Presses are located on sub-level floor, stacks run for some length before leaving press area.
11. APC Equipment (if any) Press #1 utilizes 3000 scfm Oxy Cat. unit (1-bed). Press #2 utilizes 12,000 scfm Oxy Cat. unit (2-bed).
12. General Comments: This type of control equipment is not in wide use throughout the web offset industry.

*Restricted use only.

Data Sheet #2-ECD

Test No. 1
Plant Code No. 7-W.Q.

Graphic Arts Technical Foundation
Environmental Control Division
Research Department
Pittsburgh, Pennsylvania 15213

Test Date: 11/9/71
Conditions 2-web, 1-color perfecting

Physical and Operational Plant Data

	Reading/Comments
Atmospheric pressure (at test site)	29.30
Temperature (at test site)	75°F
Relative humidity (at test site)	50%
Wind speed	Not applicable
Ambient temperature	Not applicable
db/wb ambient	Not applicable
db/wb stack	81°F/73°F
Flue gas - a) sampling point	a) 240°F
b) stack exit	
APC - Inlet	650°F-950°F depending on test cond.
APC - Outlet	650°F-950°F depending on test cond.
Web	—
Chill Exhaust	—
Oven/Dryer (specify) - bake temperature	400°F
Static press stack "H_2O (ΔH)	0.15
Atmospheric "Hg	29.30
Press drop APC fan	8" H_2O
Press operating speed	15,500 iph
Web width/sheet dimensions	35"
No. printing units/No. plate cylinders	2
No. colors per side/coat thickness	1
Type of paper/sheet	uncoated
Grade	—
Wt. of paper/wt. of coating	33#

Ink Consumption 0.0013#/imp.
Control equipment data - TL-45-H-400, (1-bed Oxy Cat. unit), rated 3000 scfm
Gas consumption - 2500-2700 cu ft per hour, 3,000,000 BTU
Age of unit: 2 years
Capital cost of equipment - $17,000.00
Installation cost of equipment $6,000.00
Running cost of unit (depending on press usage) approx. $600 per month
*Maintenance cost (actually incurred) $1200.00 per year.
*Unit has not undergone major maintenance since installation, thus accounting for the low maintenance figure.

Data Sheet #2-ECD

Test No. 2
Plant Code No. 7-W.O.

Graphic Arts Technical Foundation
Environmental Control Division
Research Department
Pittsburgh, Pennsylvania 15213

Test Date: 11/10/71
Conditions 1-web, 2-color perfecting

Physical and Operational Plant Data

	Reading/Comments
Atmospheric pressure (at test site)	29.30
Temperature (at test site)	75°F
Relative humidity (at test site)	50%
Wind speed	Not applicable
Ambient temperature	Not applicable
db/wb ambient	Not applicable
db/wb stack	–
Flue gas - a) sampling point	a) 172°F
b) stack exit	
APC - Inlet	625°F-900°F depending on test cond.
APC - Outlet	600°F-875°F depending on test cond.
Web	—
Chill Exhaust	—
Oven/Dryer (specify) - bake temperature	450°F
Static press stack "H_2O (ΔH)	1.30
Atmospheric "Hg	29.30
Pressure drop APC Fan	15" H_2O
Press operating speed	17,500 iph (580 ft/min)
Web width/sheet dimensions	35"
No. printing units/No. plate cylinders	2
No. colors per side/coat thickness	2
Type of paper/sheet	uncoated
Grade	—
Wt. of paper/wt. of coating	60#

Ink consumption	0.0020 #/imp.
Control equipment (data)	TL-120-H-720 (2-bed Oxy Cat unit) Rated at 12000 scfm
Gas consumption	8000-9500 cu ft/hr, 9,000,000 BTU
Age of unit	1-1/2 years
Capital cost of equipment	$29,000
Installation cost of equipment	$6000
Operational cost of equip. (dep. on press usage)	approx. $1500-$1800 per month
*Maintenance cost (actually incurred)	$1200 per year

*Unit has not undergone major maintenance, i.e., bed change, est. cost could be $3000-$4000 per bed.

Data Sheet #3-ECD

Graphic Arts Technical Foundation
Environmental Control Division
Research Department
Pittsburgh, Pennsylvania 15213

Plant Code No. 7-W.O.

Date: 11/9/71

Effluent Sampling Data

Sample #	Time	Period	Probe Configuration	Comments
2 and 4	10:55-11:15	20 min.	Perpendicular & inserted to center of duct dia.	1-color, 2-web, perfecting, press speed of 15,500 iph, duplicate samples taken at outlet of control equipment at temp. of 950°F. Note: All Samples taken utilized one common sampling port.
1 and 3	12:30-12:50	20 min.	Same	1-color, 2-web, perfecting, press speed of 15,500 iph, duplicate samples taken at outlet of control equipment at temp. of 850°F.
5 and 7	1:35-1:55	20 min.	Same	1-color, 2-web, perfecting, press speed of 15,500 iph, duplicate samples taken at outlet of control equipment at temp. of 750°F.
6 and 8	2:30-2:50	20 min.	Same	1-color, 2-web, perfecting, press speed of 15,500 iph, duplicate samples taken at outlet of control equipment at temp. of 650°F.
9 and 10	3:50-4:10	20 min.	Same	Duplicate samples of inlet to control equipment taken of 1-color, 2-web process job at press speed of 15,500 iph
11 and 12	4:20-4:40	20 min.	Same	Same as Samples 9 and 10.

Data Sheet #3-ECD

Graphic Arts Technical Foundation
Environmental Control Division
Research Department
Pittsburgh, Pennsylvania 15213

Plant Code No. 7-W.O.

Date: 11/10/71

Effluent Sampling Data

Sample #	Time	Period	Probe Configuration	Comments
13 and 14	10:50-11:10	20 min.	Perpendicular & inserted to center of duct diameter.	2-color, 1-web perfecting, press speed of 17,500 iph, duplicate samples taken at outlet of control equipment at temp. of 900°F.
15 and 16	11:15-11:35	20 min.	Same	Duplicate samples, same job as outlined above, taken at outlet of control equipment at temp. 800°F.
17 and 18	11:40-12:00	20 min.	Same	Duplicate samples, same job as outlined above, taken at outlet of control equipment at temp. of 700°F.
19 and 20	1:15-1:35	20 min.	Same	Duplicate samples, same job as outlined above, taken at outlet of control equipment at temp. of 625°F.
21 and 22	2:00-2:20	20 min.	Same	Duplicate samples of inlet to control equipment taken of 2-color, 1-web perfecting, process job at press speed of 17,500 iph.
	Note: Sample No. 21 indicated apparent loss of vacuum prior to usage.			
23 and 24	2:25-2:45	20 min.	Same	Same as Samples 21 and 22.

DATA SHEET #3-ECD-A
(Analytical Results in ppm)

Press No.	Date/Time	Process	Cylinder No.	Total Organics	CO	CH_4	CO_2
1	11/9/71 3:50-4:10	2-web, 1-color perfecting, uncoated stock, press speed 15,500 iph at inlet to control equipment	9	284	trace	14	5510
			10	297	trace	15	5465
	11/9/71 4:20-4:40	2-web, 1-color perfecting, uncoated stock, press speed 15,500 iph at inlet to control equipment	11	226	trace	7	2880
			12	215	trace	7	2956
	11/9/71 10:55-11:15	Outlet of control equipment temp. 950°F	*2	849	trace	7	18904
			4	4	trace	3	16066
	11/9/71 12:30-12:50	Outlet of control equipment temp. 850°F	1	98	trace	10	20723
			3	6	trace	3	12597
	11/9/71 1:35-1:55	Outlet of control equipment temp. 750°F	*5	544	trace	8	14737
			7	6	trace	7	15908
	11/9/71 2:30-2:50	Outlet of control equipment temp. 650°F	*6	905	trace	7	14246
			8	135	trace	6	18072
2	11/10/71 2:00-2:20	1-web, 2-color perfecting, uncoated stock, press speed 17,500 iph at inlet to control equipment	**21	89	trace	57	2459
			22	309	trace	89	3034
	11/10/71 2:25-2:45	1-web, 2-color perfecting, uncoated stock, press speed 17,500 iph at inlet to control equipment	23	246	trace	46	3149
			24	255	trace	46	2982

continued

DATA SHEET #3-ECD-A
(Analytical Results in ppm)

Press No.	Date/Time	Process	Cylinder No.	Total Organics	CO	CH_4	CO_2
2	11/10/71	Outlet of control equipment	13	4	not detected	17	17592
	10:50-11:10	temp. 900°F	14	9	trace	32	17690
	11/10/71	Outlet of control equipment	15	7	not detected	38	15017
	11:15-11:35	temp. 800°F	*16	426	trace	17	15559
	11/10/71	Outlet of control equipment	17	15	not detected	18	13465
	11:40-12:00	temp. 700°F	18	18	not detected	18	13763
	11/10/71	Outlet of control equipment	19	30	trace	19	12006
	1:15-1:35	temp. 625°F	*20	284	trace	18	11268

*Sample suspect, results show organic outlet loading greater than inlet loading.
**Pressure gauge on sample cylinder indicated loss of vacuum prior to sampling, thus results are suspect.

DATA SHEET #3-ECD-B
(Calculated Emission Rates)

Press No.	Cylinder No.	Total Organics (ppm)	Flow Rate (scfm)	Organic Emission (lb/hr)
1	1	98	5000	0.93
	2	*849	"	4.62
	3	6	"	0.057
	4	4	"	0.038
	5	*544	"	2.96
	6	*905	"	4.93
	7	6	"	0.057
	8	135	"	1.28
	9	284	"	2.69
	10	297	"	2.81
	11	226	"	2.15
	12	215	"	2.05
2	13	4	9300	0.070
	14	9	"	0.16
	15	7	"	0.12
	16	*426	"	7.54
	17	15	"	0.26
	18	18	"	0.32
	19	30	"	0.53
	20	*284	"	5.02
	21	**89	"	1.57
	22	309	"	5.45
	23	246	"	4.33
	24	255	"	4.50

*Sample results suspect
**Sample invlaidated

DATA SHEET #3-ECD-C
Comparison of Calculated and Observed Emission Rates

Cylinder[1] No.	Ink Coverage (lb/imp)	Press Speed (iph)	Type Paper Stock	Emission[2] (calculated)	Emission[3] (observed)	C value[4] $E_{obs.}/E_{calc.}$
9 & 10	.0013	15,500	Uncoated	7.32	2.75	0.38
23 & 24	.0020	17,500	Uncoated	12.25	4.42	0.36

(1) Average value of duplicate samples utilized in calculation.
(2) Calculated emission rate inclusive of paper contribution as determined in previous test series. Solvent content of ink = 0.35.
(3) Based on calculated gas velocity and reported analytical results (See Data Sheet #3-ECD-B).
(4) Fraction of organics not converted to CO_2 and H_2O in the dryer.

DATA SHEET #3-ECD-D
Calculated Organic Conversion at Various Incineration Temperatures
(Expressed as % Efficiency)

Press No.	Incineration Temperature	Inlet(1) Concentration (ppm)	Outlet(2) Concentration (ppm)	% Efficiency(3) (calc.)
1	650	290	135	53.45
	750	290	6	97.93
	850	290	98 & 6	62.21 & 97.93
	950	290	4	98.62
2	625	250	30	88.00
	700	250	15 & 18	94.00 & 92.80
	800	250	7	97.20
	900	250	4 & 9	98.40 & 96.40

(1) Average value of duplicate samples utilized to establish inlet concentration.
(2) Individual sample result as taken from lab analysis report.
(3) Equation utilized for computing % efficiency as follows:

$$\% \text{ efficiency} = 100 - \frac{\text{outlet Cppm}}{\text{inlet Cppm}} \times 100$$

Data Sheet #5-ECD

Test No.: 1
Plant Code No.: 7-W.O.
Sampling Location
Outlet of control equipment

Graphic Arts Technical Foundation
Environmental Control Division
Research Department
Pittsburgh, Pennsylvania 15213

Date: 11/9/71
GATF Personnel:
R. R. Gadomski
W. J. Green

Gas Velocity Data

Point No.	Time: 2:30-2:40 pm			Time: 3:45-4:00 pm		
	Vel. Head in.H_2O (h)	Temp °F	Velocity ft/sec	Vel. Head in.H_2O (h)	Temp °F	Velocity ft/sec
A-1	0.05	240	17.4	0.05	240	17.4
A-2	0.05	240	17.4	0.05	240	17.4
A-3	0.05	240	17.4	0.05	240	17.4
A-4	0.06	240	18.8	0.05	240	17.4
A-5	0.05	240	17.4	0.04	240	15.4
A-6	0.04	240	15.4	0.04	240	15.4
A-7	0.04	240	15.4	0.04	240	15.4
Av.		240	17.0		240	16.6

A. Av. velocity (traverse) ft/sec 16.8
B. Av. velocity (ref. pt.) ft/sec n/a
C. Flue factor A/B None
D. Pitot Tube correction factor(if any) None
E. Gas density factory(ref. to air) 1.0
F. Corrected velocity B x C x D x E ft/sec 16.8
G. Area of flue, sq. ft. 7.11
H. Av. flue temp. °F 240
I. Flow rate @ stack cond.
F x G x 60, acfm 7167
J. P_s = 29.30
K. Corrected to std. cond.
Flow rate = $\frac{520 \times I \times P_s}{H + 460 \times 29.92}$, scfm 5,000

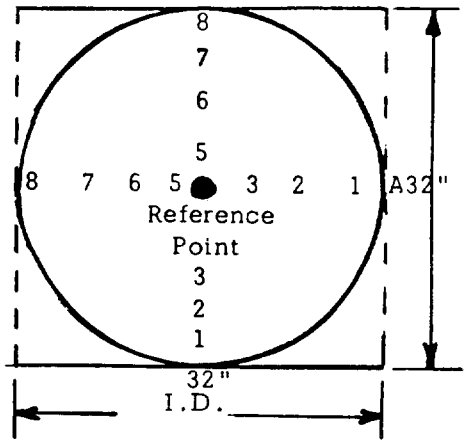

Static (ΔH) "H_2O = 0.15
P_g = - ΔH/13.6 = 0.00
P_{atm} "Hg = 29.30
$P_s = P_{atm} - P_g$ = 29.30

Data Sheet #5-ECD

Test No.: 2
Plant Code No.: 7-W.O.
Sampling Location
Outlet of control equipment

Graphic Arts Technical Foundation
Environmental Control Division
Research Department
Pittsburgh, Pennsylvania 15213

Date: 11/10/71
GATF Personnel:
R. R. Gadomski
W. J. Green

Gas Velocity Data

Point No.	Time: 1:55-2:00 pm			Time: 2:50-2:55 pm		
	Vel. Head in.H_2O (h)	Temp °F	Velocity ft/sec	Vel. Head in.H_2O (h)	Temp °F	Velocity ft/sec
A-1	0.040	172	14.5	0.040	172	14.5
A-2	0.040	172	14.5	0.040	172	14.5
A-3	0.040	172	14.5	0.040	172	14.5
A-4	0.040	172	14.5	0.040	172	14.5
A-5	0.040	172	14.5	0.040	172	14.5
A-6	0.025	172	11.2	0.025	172	11.2
A-7	0.025	172	11.2	0.025	172	11.2
Av.		172	13.6		172	13.6

A. Av. velocity (traverse) ft/sec 13.6
B. Av. velocity (ref. pt.) ft/sec n/a
C. Flue factor A/B None
D. Pitot Tube correction factor(if any) None
E. Gas density factory(ref. to air) 1.0
F. Corrected velocity B x C x D x E ft/sec 13.6
G. Area of flue, sq. ft. 14.00
H. Av. flue temp. °F 172
I. Flow rate @ stack cond.
F x G x 60, acfm 11,325
J. P_s = 29.21
K. Corrected to std. cond.
Flow rate = $\frac{520 \times I \times P_s}{H + 460 \times 29.92}$, scfm 9300

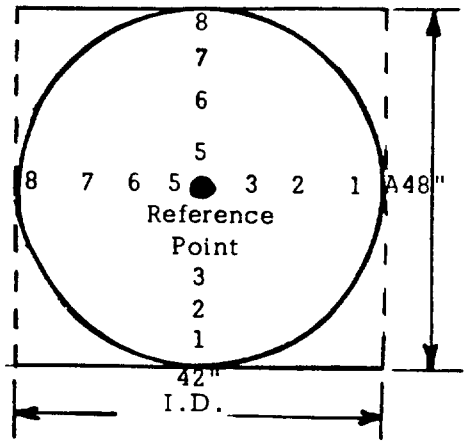

Static (ΔH) "H_2O = 1.3
P_g = - ΔH/13.6 = 0.09
P_{atm} "Hg = 29.30
$P_s = P_{atm} - P_g$ = 29.21

Approved

CARNEGIE-MELLON UNIVERSITY

MELLON INSTITUTE

RESEARCH SERVICES

Physical Measurements Laboratory (7615-2)

Fellow Mr. Ray Gadomski (2)

Account No. Graphic Arts Technical Foundation P.O. #3104

Investigation Air Pollution Program

Investigation No. PML 71-234-7-W.O.

Date of Report December 23, 1971

NATURE OF REPORT: Preliminary ____ Progress ____ Final x

The twenty-four samples of stack gas effluent which you submitted have been analyzed by the procedure described in a recent report dated December 17, 1971. The data are tabulated in the attached table.

Paul R. Eisaman
Fellow
Physical Measurements Laboratory

PRE:jdf

R&T: 1/4/72

GATF

JAN 5 - 1972
GATF

Form 111

Table I

Stack Gas Samples

Plant Code No. 7-W.O.

Cylinder No.	9	10	11	12	21	22	23	24	1	2	3	4
Sample Volume, cc NTP	272	271	274	268	289	272	246	265	265	255	263	272
Content, v/v % as CO_2												
Carbon Monoxide	trace	trace	---	trace	trace	trace	trace	trace	trace	trace	trace	trace
Carbon Dioxide	0.5510	0.5465	0.2880	0.2956	0.2459	0.3034	0.3149	0.2982	2.0723	1.8904	1.2597	1.6066
Methane	0.0014	0.0015	0.0007	0.0007	0.0057	0.0089	0.0046	0.0046	0.0010	0.0007	0.0003	0.0003
Organics	0.0008	0.0007	0.0003	0.0002	0.0008	0.0012	0.0009	0.0008	0.0012	0.0002	0.0002	0.0000
Traps, Low Boilers	0.0009	0.0040	0.0033	0.0011	0.0003	0.0020	0.0024	0.0019	0.0015	0.0003	0.0003	0.0003
Traps, High Boilers	0.0267	0.0250	0.0190	0.0202	0.0078	0.0277	0.0213	0.0228	0.0071	0.0844	0.0001	0.0001

Cylinder No.	5	6	7	8	13	14	15	16	17	18	19	20
Sample Volume, cc NTP	246	271	276	273	244	239	144	236	261	226	262	260
Content, v/v % as CO_2												
Carbon Monoxide	trace	trace	trace	trace	---	trace	---	trace	---	---	trace	trace
Carbon Dioxide	1.4737	1.4246	1.5908	1.8072	1.7592	1.7690	1.5017	1.5559	1.3465	1.3763	1.2006	1.1268
Methane	0.0008	0.0007	0.0007	0.0006	0.0017	0.0032	0.0038	0.0017	0.0018	0.0018	0.0019	0.0018
Organics	0.0001	0.0000	0.0001	0.0003	0.0001	0.0006	0.0005	0.0000	0.0001	0.0000	0.0001	0.0002
Traps, Low Boilers	0.0014	0.0001	0.0002	0.0007	0.0001	0.0002	0.0002	0.0001	0.0002	0.0001	0.0007	0.0003
Traps, High Boilers	0.0529	0.0904	0.0003	0.0125	0.0002	0.0001	0.0000	0.0425	0.0012	0.0017	0.0022	0.0279

Data Sheet #1-ECD

Graphic Arts Technical Foundation
Environmental Control Division
Research Department
Pittsburgh, Pennsylvania 15213

I. *Source Location Data

1. Firm Name: _____ Phone _____
2. Address: _____
3. Representative(s) Contacted: _____
4. Plant Code No.: 8-WO (BC)

II. Source and Sample Background Data

5. Date(s) of Test(s): June 13, 1972
6. Process(es) and Basic Equipment (incl. throughput rates): 5-unit, Hanscho Mark II web offset perfecting press with WPE combination direct flame and hot air dryer utilizing 3-6 ft dryer boxes and controlled by a TEC Systems thermal afterburner.
7. Product(s): Publication Printing
8. Amounts Consumed (Monthly Av.)
   A. Paper or other substrates: Not applicable
   B. Inks and Solvents: Not applicable
9. Dryer or Oven Equipment:
   A. Type, manufacturer, model: WPE combination type
   B. Air Flows (rated), Temp.: 2400 scfm @ discharge temp. 340°F
   C. Fuel or Heat Consumption: 1,200,00 Btu/hr
   D. Comment: Dryer represents old type design and is no longer commercially manufactured.
10. Stack Geometry:
   A. No. (Single, manifolded) Single
   B. Cross-sectional area: 1.0 sq ft
   C. Height above roof: 9 feet
   D. Approx. running length: 16 feet
   E. Comment: Ideal sampling location and configuration
11. APC Equipment (if any) TEC "Turbo-Mix" pilot thermal afterburner, for specific details see Data Sheet included.
12. General Comments: Sampling sites as well as layout of basic equipment provided a good overall sampling test.

*Restricted use only.

Test No. 1	Graphic Arts Technical Foundation	Data Sheet #2-ECD
	Environmental Control Division	Test Date: 6/13/72
Plant Code No. 8-W.O.	Research Department	Conditions: Excellent
(BC)	Pittsburgh, Pennsylvania 15213	for sampling

Physical and Operational Plant Data

	Reading/Comments
Ambient temperature	85°F
db/wb ambient	Not applicable
db/wb stack	Not applicable
Flue gas - a) sampling point temp.	a) 340°F
b) stack exit temp.	b) not applicable
APC - inlet temp.	340°F
APC - outlet temp.	1100°F to 1300°F dependent on test requirements
Web temp.	300°F
Chill exhaust temp.	72°F
Oven/Dryer (specify) - bake temp.	Not applicable
Static press stack "H_2O (H)	2.2
Atmospheric "Hg	29.98
Press operating speed	16,000 iph
Web width/sheet dimensions	36"
No. printing units/No. plate cylinders	Five
No. colors per side/coating thickness	Five
Est. coating/ink usage rate	0.00325 #/imp (based on 40% solvent)
Type of paper/sheet	coated
Weight of paper/weight of coating	100 lb

Control Equipment Data

1. Description of unit:	TEC Systems, Inc. "Turbo-Mix" thermal incinerator prototype unit, Model No. R-314, rated at 2500 scfm at max. designed operating temp. (continuous) of 1500°F.
2. Gas consumption:	Rated at 2800 cu ft/hr (2,000,000 Btu/hr necessary for burner).
3. Age of unit:	1 year
4. Capital cost of equip:	$12,000
5. Installation cost:	$2500 (includes structural support, electrical and gas piping, labor, etc.
6. *Fuel cost:	$6870 per year (based on 7.2¢/therm gas cost, approx. $1.50/hr, two shift, 5-1/2 day work week)

*Unit has not undergone maintenance, therefore, no maintenance cost available.

7. Miscellaneous Data:	Typical operating condition for afterburner is one dryer. Unit is operated at a temp. of 1100°F. Dwell time for unit (design) is 0.5 sec at 1500°F. Efficiency studies have been conducted at various linear distances from burner down combustion chamber. (These range from 95% to 99%.)

Data Sheet #3-ECD

Graphic Arts Technical Foundation
Environmental Control Division
Research Department
Pittsburgh, Pennsylvania 15213

Plant Code No. 8-WO (BC)

Date: 6/13/72

Effluent Sampling Data

Sample #	Time	Period	Probe Configuration	Comments
18, 19	11:15-11:30 am	15 min.	Perpendicular and inserted to center of inlet duct	Duplicate samples of inlet to afterburner for 5-color, 1-web process. Press speed of 16,000 iph, ink coverage of 0.0725 #/imp. on coated (100#) stock.
21, 22	11:15-11:30 am	15 min.	Perpendicular and inserted into combustion chamber	Samples taken of outlet of afterburner at incineration temp. of 1100°F. (check of this temp. at point of sampling indicated temp. as 1130°F.)
23, 24	*12:00-12:02 12:08-12:20 pm	15 min.	Same as samples 18 & 19	Duplicate samples of inlet to afterburner. Same operational data as samples 18 & 19.
25, 26	*12:00-12:02 12:00-12:20 pm	15 min.	Same as samples 21 & 22	Samples taken of outlet of afterburner at incineration temp. of 1300°F. (check of this temp. at point of sampling indicated temp. as 1330°F.)

*Web break occurred during sampling period.

DATA SHEET #3-ECD-A
(analytical results in ppm)

Press No.	Date/Time	Process	Cylinder No.	Total Organics	CO	CH_4	CO_2
1	6/13/72 11:15-11:30	1-web, 5-color perfecting coated (100#) stock, press speed of 16,000 iph, ink coverage of 0.00325 #/imp at inlet to control equip.	18	2085	145	241	8606
			19	2221	144	246	8714
	6/13/72 12:00-12:20	Same as above	23	2166	67	261	8081
			24	1341	46	208	6167
	6/13/72 11:15-11:30	Outlet of control equipment at T = 1100°F	21	117	711	56	34289
			22	21	-	52	34582
	6/13/72 12:00-12:20	Outlet of control equipment at T = 1300°F	25	29	trace	1	42453
			26	36	trace	1	42327

DATA SHEET #3-ECD-B
(Calculated Emission Rates)

Press No.	Cylinder No.	Total Organics (ppm)	Flow Rate (scfm)	** Organic Emission (lb/hr)
1	18	2085	1400	5.58
	19	2221		5.92
	*23	2166	"	5.76
	*24	1341	"	3.58
	21	117	"	0.48
	22	21	"	0.05
	25	29	"	0.08
	26	36	"	0.09

*Sample results suspect
**Calculated on the following basis:

$$\text{lb carbon/hour} = 1.90 \times 10^{-6} \text{ (scfm) (ppm)}$$

DATA SHEET #3-ECD-C
Comparison of Calculated and Observed Emission Rates

Cylinder[1] No.	Ink Coverage (lb/imp)	Press Speed (iph)	Type Paper Stock	Emission[2] (calc)	Emission[3] (obs)	C Value[4] E_{obs}/E_{calc}
18, 19	0.00325	16,000	coated	16.80	5.75	0.35

(1) Average value of duplicate samples utilized in calculation.
(2) Calculated emission rate inclusive of background contribution due to dryer and paper. Solvent content of ink - 0.40.
(3) Based on calculated gas velocity and reported analytical results (see Data Sheet #3-ECD-B).
(4) Fraction of organics not converted to CO_2 and H_2O in the dryer.

DATA SHEET #3-ECD-D
Calculated Organic Conversion at Various Incineration Temperatures
(Expressed as % Efficiency)

Press No.	Incineration Temperature (°F)	Inlet Concentration[1] (ppm)	Outlet Concentration[2] (ppm)	% Efficiency[3] (calc)
1	1100	2153	21 & 117	99.02 & 94.57
	1300	2153	29 & 36	98.65 & 98.34

(1) Average value of duplicate samples utilized to establish inlet concentration.
(2) Individual sample result as taken from lab analysis report.
(3) Equation utilized for computing % efficiency as follows:

$$\% \text{ efficiency} = 100 - \frac{\text{outlet C ppm}}{\text{inlet C ppm}} \times 100$$

Data Sheet #5-ECD

Test No.: 1
Plant Code No.: 8-WO (BC)
Sampling Location
Inlet to control equipment

Graphic Arts Technical Foundation
Environmental Control Division
Research Department
Pittsburgh, Pennsylvania 15213

Date: 6/13/72
GATF Personnel:
R. R. Gadomski
A. V. Gimbrone

Gas Velocity Data

Point No.	Time: 9:30-9:40 am			Point No.	Time: 9:40-9:45 am		
	Vel. Head in. H_2O (h)	Temp °F	Velocity ft/sec		Vel. Head in. H_2O (h)	Temp °F	Velocity ft/sec
A-1	0.15	340	31.9	B-1	0.25	340	38.5
A-2	0.15	340	31.9	B-2	0.20	340	37.7
A-3	0.14	340	30.4	B-3	0.18	340	35.4
A-4	0.13	340	28.7	B-4	0.15	340	31.9
A-5	0.12	340	28.1	B-5	0.12	340	28.1
A-6	0.10	340	27.1	B-6	0.10	340	27.1
Av.		340	29.7	Av.		340	33.1

A. Av. velocity (traverse) ft/sec 31.4
B. Av. velocity (ref. pt.) ft/sec N/A
C. Flue factor A/B None
D. Pitot Tube correction factor (if any) 1.0
E. Gas density factory (ref. to air) 1.0
F. Corrected velocity B x C x D x E ft/sec 31.4
G. Area of flue, sq. ft. (1' x 1') 1.0
H. Av. flue temp. °F 340
I. Flow rate @ stack cond.
F x G x 60, acfm 1900
J. P_s = 29.82
K. Corrected to std. cond.
Flow rate = $\frac{520 \times I \times P_s}{(H + 460) \times 29.92}$ scfm 1400

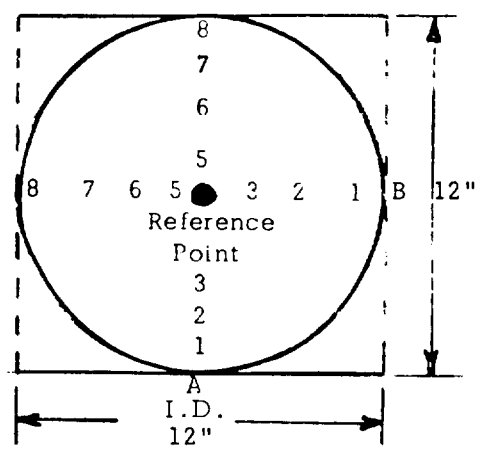

Static (ΔH) "H_2O = 2.2
P_g = $\Delta H/13.6$ = 0.16
P_{atm} "Hg = 29.98
$P_s = P_{atm} - P_g$ = 29.82

Approved PBMR

CARNEGIE-MELLON UNIVERSITY

MELLON INSTITUTE

RESEARCH SERVICES

Physical Measurements Laboratory (7615-2)

Fellow Mr. Ray Gadomski (2)

Account No. Graphic Arts Technical Foundation P.O. # 3104

Investigation Air Pollution Program

Investigation No. PML 72-221 (8-WO) (BC)

Date of Report July 14, 1972

NATURE OF REPORT: Preliminary ____ Progress ____ Final x

The eight samples of stack gas effluent which you submitted have been analyzed by the procedure described in a recent report dated December 17, 1971. The results are tabulated in the attached table.

Paul R. Eisaman
Fellow
Physical Measurements Laboratory

PRE:jdf

Form 111

Table I

Stack Gas Samples

Code 8-W.O.-BC

Cylinder No.	18	19	23	24	21	22	25	26
Sample Volume, cc NTP	270	268	249	258	278	261	260	254
Content, v/v % as CO_2								
Carbon Monoxide	0.0145	0.0144	0.0067	0.0046	0.0711	------	trace	trace
Carbon Dioxide	0.8606	0.8714	0.8081	0.6167	3.4289	3.4582	4.2453	4.2327
Methane	0.0241	0.0246	0.0261	0.0208	0.0056	0.0052	0.0001	0.0001
Organics	0.0082	0.0086	0.0545	0.0056	0.0113	0.0020	0.0029	0.0036
Traps, Low Boilers	0.0517	0.0739	0.0542	0.0388	0.0004	0.0001	0.0000	0.0000
Traps, High Boilers	0.1486	0.1396	0.1079	0.0897	0.0000	0.0000	0.0000	0.0000

Data Sheet #1-ECD

Graphic Arts Technical Foundation
Environmental Control Division
Research Department
Pittsburgh, Pennsylvania 15213

I. *Source Location Data

1. Firm Name: _____ Phone _____
2. Address: _____
3. Representative(s) Contacted: _____
4. Plant Code No.: 9-WO (BC)

II. Source and Sample Background Data

5. Date(s) of Test(s): June 27, 1972
6. Process(es) and Basic Equipment (incl. throughput rates): Harris-Cottrell, M1000, 5-unit web offset press with TEC Systems high velocity hot air dryer controlled by catalytic combustion unit.
7. Product(s): Circulars, advertisement printing
8. Amounts Consumed (Monthly Av.)
   A. Paper or other substrates: Not available
   B. Inks and Solvents: Not available
9. Dryer or Oven Equipment:
   A. Type, manufacturer, model: TEC Systems, Inc. Model LA-12
   B. Air Flows (rated), Temp.: 5200 cfm @ web temp. - 600°F
   C. Fuel or Heat Consumption: 4400 cfh (rated), 2700 cfh (operational)
   D. Comment: System represents more modern concept of drying installation relatively new.
10. Stack Geometry:
   A. No. (Single, manifolded) Single
   B. Cross-sectional area: 1.55 sq ft
   C. Height above roof: 2 ft
   D. Approx. running length: 18 ft
   E. Comment: Stack extends straight up from dryer then makes 90° bend prior to entry into afterburner.
11. APC Equipment (if any) TEC Systems combined thermal & catalytic unit, Model TEC-H-40 MC (Cat. unit in use during field tests)
12. General Comments: Sampling was conducted within recommended practice.

*Restricted use only.

Test No. 1

Plant Code No. 9-WO (BC)

Graphic Arts Technical Foundation
Environmental Control Division
Research Department
Pittsburgh, Pennsylvania 15213

Data Sheet #2-ECD

Test Date: June 27, 1972
Conditions: excellent for sampling

	Reading/Comments
Ambient temperature	75°F
Flue gas - a) sampling point temp.	a) 390°F
b) stack exit temp.	b) not applicable
APC - Inlet temp.	390°F
APC - Outlet temp.	700-800°F dependent on test requirements
Web temp.	300°F
Chill exhaust temp.	75°F
Oven/Dryer (specify) - bake temp.	450°F (dryer temp.)
Static press stack "H_2O (H)	2.3" H_2O
Atmospheric "Hg	29.98
Press operating speed	27,000 imp/hr
Web width/sheet dimensions	33"
No. printing units/No. plate cylinders	4
No. colors per side/coating thickness	4
Est. coating/ink usage rate	0.0025 #/imp
Type of paper/sheet	Coated
Wt. of paper/wt. of coating	50#

Control Equipment Data

1. Description of unit:	Model TEC-H-40MC (Job No. 305) thermal/catalytic combustion unit, rated at 4000 scfm. Maximum designed temp. thermal (1600°F), catalytic (800°F) 1-bed unit.
2. Age of unit:	Approximately 1 year
3. Gas consumption:	1520 cfh for 800°F operation, 7,800,000 Btu required for burner.
4. Capital equip. cost:	$23,000
5. Installation cost:	$4000 (includes gas piping, necessary ductwork, structural support and labor).
6. Operational cost:	$600 per month, (based on 5-day, 2-shift work week), gas cost $0.88 per therm.
7. Maintenance cost:	None (unit has not undergone maintenance).
8. Miscellaneous data:	Unit is a combined thermal and catalytic unit. Dwell time in the catalytic cell is 0.048 sec @ 800°F. Resident time in combustion chamber is 0.5 sec @ 1600°F.

Data Sheet #3-ECD

Graphic Arts Technical Foundation
Environmental Control Division
Research Department
Pittsburgh, Pennsylvania 15213

Plant Code No. 9-WO (BC)

Date: June 27, 1972

Effluent Sampling Data

Sample No.	Time	Period	Probe Configuration	Comments
29, 30	10:35-10:50 am	15 min.	Perpendicular and inserted to outlet of control equip	Samples of outlet of control equipment at T = 800°F. (Temperature check at point of sampling was recorded at T = 820°F)
27, 28	10:35-10:50 am	15 min.	Perpendicular and inserted to center of inlet duct to control equip	Duplicate samples of inlet to control equipment of 1-web, 4-color process, press speed of 27,000 iph, ink coverage of 0.0025 #/imp.
31, 33	11:07-11:27 am	20 min.	Perpendicular and inserted to center of inlet duct to control equip	Duplicate samples of inlet to control equipment (same operational conditions as samples 27 and 28.)
34, 38	11:07-11:27 am	20 min.	Perpendicular and inserted to outlet duct of control equipment	Samples of outlet of control equipment at T = 750°F. (Temperature check at point of sampling was recorded at T = 780°F)

DATA SHEET #3-ECD-A
(Analytical Results in ppm)

Plant Code No.	Date/Time	Process	Cylinder No.	Total Organics	CO	CH_4	CO_2
9-WO (BC)	6/27/72 10:35-10:50 am	1-web, 5-color perfecting coated (50#) stock, press speed 27,000 iph, ink coverage 0.0025 #/imp at inlet to control equipment.	27	2608	60	13	8202
			28	2641	43	13	8136
	6/27/72 11:07-11:27 am	Same as above	31	2332	18	17	7512
			33	2532	35	17	7043
	6/27/72 11:07-11:27 am	Outlet of control equip. at T = 750°F	34	455	121	18	18110
			38	261	272	17	18518
	6/27/72 10:35-10:50 am	Outlet of control equip. at T = 800°F	29	95	103	17	20826
			30	116	141	19	21335

DATA SHEET #3-ECD-B
(Calculated Emission Rates)

Plant Code No.	Cylinder No.	Total Organics (ppm)	Flow Rate (scfm)	Organic Emission (lb/hr)
9-WO (BC)	27	2608	3000	14.87
	28	2641	"	15.05
	31	2332	"	13.28
	33	2532	"	14.42
	34	455	"	2.56
	38	261	"	1.48
	29	95	"	0.54
	30	116	"	0.66

DATA SHEET #3-ECD-C
Comparison of Calculated and Observed Emission Rates

Cylinder[1] No.	Ink Coverage (lb/imp)	Press Speed (iph)	Type Paper Stock	Emission[2] (calc)	Emission[3] (obs)	C Value[4] (E_{obs}/E_{calc})
27 & 28	0.0005	27,000	coated	29.50	14.96	0.50
31 & 33	0.0005	27,000	coated	29.50	13.85	0.47

(1) Average value of duplicate samples utilized in calculation.
(2) Calculated emission rate inclusive of background contribution due to dryer and paper. Solvent content of ink - 0.40.
(3) Based on calculated gas velocity and reported analytical results (see Data Sheet #3-ECD-B).
(4) Fraction of organics not converted to CO_2 and H_2O in the dryer.

DATA SHEET #3-ECD-D

Calculated Organics Conversion at Various Incineration Temperatures

(Expressed as % Efficiency)

Plant Code No.	Incineration Temperature (°F)	Inlet Concentration(1) (ppm)	Outlet Concentration(2) (ppm)	% Efficiency(3) (calc)
9-WO (BC)	750	2552	261 & 455	89.80 & 82.17
	800	2552	95 & 116	96.28 & 9545

(1) Average value of duplicate samples utilized to establish inlet concentration.

(2) Individual sample result as taken from lab analysis report.

(3) Equation utilized for computing % efficiency as follows:

$$\% \text{ efficiency} = 100 - \frac{\text{outlet C ppm}}{\text{inlet C ppm}} \times 100$$

Data Sheet #5-ECD

Test No.: 1
Plant Code No.: 9-WO (BC)
Sampling Location
Inlet to afterburner

Graphic Arts Technical Foundation
Environmental Control Division
Research Department
Pittsburgh, Pennsylvania 15213

Date: June 27, 1972
GATF Personnel:
R. R. Gadomski
A. V. Gimbrone

Gas Velocity Data

Point No.	Time: 10:25-10:30 am			Point No.	Time: 10:30-10:35 am		
	Vel. Head in. H_2O (h)	Temp °F	Velocity ft/sec		Vel. Head in. H_2O (h)	Temp °F	Velocity ft/sec
A-1	0.35	390	50.2	B-1	0.35	390	50.2
A-2	0.40	390	53.1	B-2	0.40	390	53.1
A-3	0.42	390	54.2	B-3	0.42	390	54.2
A-4	0.43	390	55.4	B-4	0.43	390	55.4
A-5	0.40	390	53.1	B-5	0.40	390	53.1
A-6	0.35	390	50.2	B-6	0.35	390	50.2
Av.		390	52.7	Av.		390	52.7

A. Av. velocity (traverse) ft/sec 52.7
B. Av. velocity (ref. pt.) ft/sec N/A
C. Flue factor A/B None
D. Pitot Tube correction factor (if any) 1.0
E. Gas density factory (ref. to air) 1.0
F. Corrected velocity B x C x D x E ft/sec 52.7
G. Area of flue, sq. ft. 1.55
H. Av. flue temp. °F 390
I. Flow rate @ stack cond.
F x G x 60, acfm 4900
J. P_s = 29.81
K. Corrected to std. cond.
Flow rate = $\frac{520 \times I \times P_s}{(H + 460) \times 29.92}$ scfm 3000

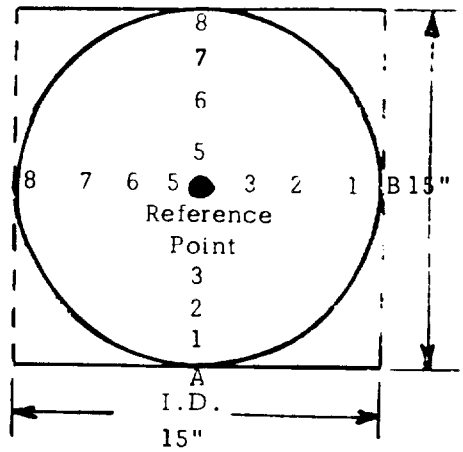

Static (ΔH) "H_2O = 2.3
P_g = ΔH/13.6 = 0.17
P_{atm} "Hg = 29.98
$P_s = P_{atm} - P_g$ = 29.81

Approved

CARNEGIE-MELLON UNIVERSITY

MELLON INSTITUTE

RESEARCH SERVICES

Physical Measurements Laboratory (7615-2)

JL 26 1972

GATF

Fellow Mr. Ray Gadomski (2)

Account No. Graphic Arts Technical Foundation P.O. #3104

Investigation Air Pollution Program

Investigation No. PML 72-222 (9-WO) (BC)

Date of Report July 20, 1972

NATURE OF REPORT: Preliminary ____ Progress ____ Final x

The eight samples of stack gas effluents which you submitted have been analyzed by the procedure described in a recent report dated December 17, 1971. The results are tabulated in the attached table.

Paul R. Eisaman
Fellow
Physical Measurements Laboratory

PRE: jdf

Form 111

Table I

Stack Gas Samples

Code 9-W.O.-BC

Cylinder No.	27	28	31	33	29	30	34	38
Sample Volume, cc NTP	249	274	258	264	266	267	274	266
Content, v/v % as CO_2								
Carbon Monoxide	0.0060	0.0043	0.0018	0.0035	0.0103	0.0141	0.0121	0.0272
Carbon Dioxide	0.8202	0.8136	0.7512	0.7043	2.0826	2.1335	1.8110	1.8518
Methane	0.0013	0.0013	0.0017	0.0017	0.0017	0.0019	0.0018	0.0017
Organics	0.0073	0.0057	0.0048	0.0046	0.0077	0.0070	0.0080	0.0106
Traps, Low Boilers	0.0267	0.0428	0.0311	0.0320	0.0005	0.0007	0.0007	0.0013
Traps, High Boilers	0.2268	0.2156	0.1973	0.2166	0.0013	0.0039	0.0368	0.0142

APPENDIX E
Data Sheets
Metal Decorating Plants

DATA SHEET MD-P-1

Date of Test: January 19, 1971

Sample No.: MD-P-1 (Metal Decorating, Preliminary, 1st Sample)

Basic Equipment (description):	Company operates 5 lines, 3 of which are tandem coating lines and the other 2 are press lines.
Process Variables (at time of test)	
Sheet Dimension:	25-1/6" x 34-5/8" (70# weight)
Rate:	74 sheets/min
Coating weight thickness:	Varnish - 10 mg/4 sq in Enamel (buff) - 48 mg/4 sq in
Product dryness:	essentially assumed to be complete; plant study revealed retention of solvent in coating of 2.5% (thus 97.5% dry).
Density:	(solvent mixture is essentially a two-component system. Information of this solvent mixture will be forwarded to the Foundation to enable calculation of density of the solvent mixture.)
Product:	food container lids
Dryer data (description):	Tandem coating lines employ two dryers, one approximately 70 ft long; the other 120 ft. The smalldryer handles lacquer and varnish sizing, the larger the pigmented coatings. The 120-ft dryer is an 8-zone dryer (equal lengths) with peak heat of product achieved for 10 minutes at temperature of 375°F. The 8-zone temperature profile of the processline sampled is as follows: Zone #1 - 250°F, #2 - 345°F, #3 - 330°F, #4 - 500°F, #5 - 395°F, #6 - 375°F, #7 - 320°F, #8 - 290°F.
Stack configuration:	Each 120-ft dryer has three (3) stacks; each stack discharges effluent independently from particular sections of the dryer. Major emission discharge is through the rear stack of each dryer since exhaust is pulled in this direction. Cooling stack discharge (the front two stacks) would be insigficant when compared to the exhaust from the hot zone (rear exhaust).

Data Sheet MD-P-1 continued

Control equipment:	None

Actual field site statistics
(obtained from plant engineer):

Stack diameter:	15.5"
Stack area (sq ft)	1.3
Oven temperature	375°F
Discharge air temperature	270°F
Stack static pressure	0.5" water
Average manometer reading (vel. traverse)	0.185" water
Velocity	2075 to 2175 ft/min
Actual flow rate of gas (acfm)	2600 to 2800 ft^3/min

RESULTS - MD-P-1

	Compound	ppm
Cylinder	CO	0
	CO_2	346
	CH_4	0
	Organics	0
Trap	High boilers	130
	Low boilers	0
Probe	High boilers	6
	Low boilers	0.2

Data Sheet #1-ECD

Graphic Arts Technical Foundation
Environmental Control Division
Research Department
Pittsburgh, Pennsylvania 15213

I. *Source Location Data

1. Firm Name: _____ Phone _____
2. Address: _____
3. Representative(s) Contacted: _____
4. Plant Code No.: 1-MD

II. Source and Sample Background Data

5. Date(s) of Test(s): January 19, 1971, Feb. 22, 23, 24, 1971
6. Process(es) and Basic Equipment (incl. throughput rates): 5 lines
   3 Tandem coating lines; 2 printing lines
   2 ovens per coating line, lighter wt. coatings applied on front oven, pigmented heavier coatings in rear
7. Product(s): closures
8. Amounts Consumed (Monthly Av.)
   A. Paper or other substrates: Not applicable
   B. Inks and Solvents: See Data Sheet #2-ECD
9. Dryer or Oven Equipment:
   A. Type, manufacturer, model: Wagner, Young Bros.
   B. Air Flows (rated), Temp.: See data sheets #2 & #5
   C. Fuel or Heat Consumption: Est. 5 x 10^6 btu/hr per oven
   D. Comment: No separate metering of gas, ovens are old, only temp. of oven zones continuously recorded
10. Stack Geometry:
   A. No. (Single, manifolded) 2 stacks per oven
   B. Cross-sectional area: C - 1.30 sq ft, D - 1.75 sq ft, E - 1.70 sq. ft.
   C. Height above roof: Each stack extends 10 ft above roof level
   D. Approx. running length: 20 ft from top of oven
   E. Comment: Front stack on oven used as exhaust for cooling sections, rear stack is main exhaust of effluent
11. APC Equipment (if any) None, each stack tested utilized rain caps; considerable down-wash of effluent
12. General Comments: Sampling points were ideally located within recommended practice.

*Restricted use only.

Data Sheet #2-ECD

Graphic Arts Technical Foundation
Environmental Control Division
Research Department
Pittsburgh, Pennsylvania 15213

Test No.: 1
Plant Code No.: 1-MD

Test Date: Feb. 22, 1971
Conditions: Pigmented white vinly coating line

Physical and Operational Plant Data

Test		Reading	Time	Comments
Atmospheric Press	(Plant)	28.80	1:00 pm	Wind speed provided difficult sampling
Temperature	(Plant)	58°F		
Relative Humidity	(Plant)	50%	to	
Wind Speed	(Ambient)	Variable 15-45 mph	6:00 pm	
Ambient Temp.	Test Site	47°F	4:00 pm	
db/wb ambient		73/58		
db/wb stack		66/47		
Flue Gas a) sampl. pt., b) stack exit		-		
APC - Inlet		-		
APC - Outlet		-		
Web		-		
Chill Exhaust		-		
Oven/Dryer (specify) - Bake Temp.		365°F		
Static Press Stack "H_2O (ΔH)		0.40		
Atmospheric "Hg	Test Site	28.73		
Press Drop APC Fan		-		
Press Operating Speed/		72 sh/min		
Web width/sheet dim		-		
# Printing Units/# Plate cyl.		-		
# Colors per side/coat thickness		45.5 mg/4 sq in		
Type of Paper/Sheet		90# wt.		
Grade		-		
Wt. of Paper/Wt. of Coating		9.478 lb/gal, 40.26% solids		
Ink consumption (% coverage)		-		
Duration of Run		Approx. 8 hrs.		
Color of Ink/Coating		White vinyl		
Passes thru Drier		One		
Gas Meter Start		-		
Reading to Drier End		-		
Fan (H.P.)		-		
Solvent (Coating) Usage Rate		19.2 gal/hr (calc.)		

Data Sheet #2-ECD

Test No.: 2
Plant Code No.: 1-MD

Graphic Arts Technical Foundation
Environmental Control Division
Research Department
Pittsburgh, Pennsylvania 15213

Test Date: Feb. 23, 1971
Conditions: Gold lacquer coating line

Physical and Operational Plant Data

Test	Reading	Time	Comments
Atmospheric Press (Plant)	28.58	1:00 pm	High winds, precipitation in form of snow throughout test
Temperature (Plant)	52°F		
Relative Humidity (Plant)	47%	to	
Wind Speed (Ambient)	Variable 10-20 mph	6:00 pm	
Ambient Temp.	35°F		
db/wb ambient	63/54°F		
db/wb stack	57/43°F		
Flue Gas a) sampl. pt., b) stack exit	275°F		
APC - Inlet	-		
APC - Outlet	-		
Web	-		
Chill Exhaust	-		
Oven/Dryer (specify) - Bake Temp.	375°F		
Static Press Stack "H_2O (ΔH)	0.40	4:00 pm	
Atmospheric "H_g	28.90		
Press Drop APC Fan			
Press Operating Speed/	80 sh/min		
Web width/sheet dim	-		
# Printing Units/# Plate cyl.	-		
# Colors per side/coat thickness	5 mg/4 sq in		
Type of Paper/Sheet	75# wt.		
Grade	-		
Wt. of Paper/Wt. of Coating	7.95 lb/gal (14.77% solids)		
Ink consumption (% coverage)	-		
Duration of Run	Approx. 8 hr.		
Color of Ink/Coating	Gold lacquer		
Passes thru Drier	One		
Gas Meter Start	-		
Reading to Drier End	-		
Fan (H.P.)	-		
Solvent (Coating) Usage Rate	9.44 gal/hr		

Data Sheet #2-1[illegible]

Test No.: 3
Plant Code No.: 1-MD

Graphic Arts Technical Foundation
Environmental Control Division
Research Department
Pittsburgh, Pennsylvania 15213

Test Date: Feb. 23, 1971
Conditions: Skim coat white vinyl coating line

Physical and Operational Plant Data

Test	Reading	Time	Comments
Atmospheric Press (Plant)	28.58	3:00 pm	High winds, rain, sleet, snow prevailed throughout test
Temperature (Plant)	52°F	to	
Relative Humidity (Plant)	75%		
Wind Speed	20 mph	6:00 pm	
Ambient Temp.	35°F		
db/wb ambient	60/50°F		
db/wb stack	*42/41°F		*Extreme amount of moisture condensed out in bulb
Flue Gas a) sampl. pt., b) stack exit	-		
APC - Inlet	-		
APC - Outlet	-		
Web	-		
Chill Exhaust	-		
Oven/Dryer (specify) - Bake Temp.	365°F		
Static Press Stack "H_2O (ΔH)	0.42	4:00 pm	
Atmospheric "Hg	28.90		
Press Drop APC Fan	-		
Press Operating Speed/	70 sh/min		
Web width/sheet dim			
# Printing Units/# Plate cyl.			
# Colors per side/coat thickness	21 mg/4 sq in		
Type of Paper/Sheet	75# wt		
Grade			
Wt. of Paper/Wt. of Coating	9.38 #/gal (40.24% solids)		
Ink consumption (% coverage)	-		
Duration of Run	Approx. 8 hrs.		
Color of Ink/Coating	white vinyl skim		
Passes thru Drier	One		
Gas Meter Start	-		
Reading to Drier End	-		
Fan (H.P.)	-		*Actual on-site measurement
Solvent (Coating) Usage Rate	*13.5-14.0 gal/hr 9.2 gal/hr (calc.)		

Data Sheet #3-ECD

Graphic Arts Technical Foundation
Environmental Control Division
Research Department
Pittsburgh, Pennsylvania 15213

Plant Code No. 1-MD

Date: Feb. 22, 23, 1971

Effluent Sampling Data

Sample #	Time	Period	Collection Point	Probe Length	Variac Setting
Feb. 22, 1971					
MD-P-2	5:01-5:15	14 min	Coating line D Same as vel. trav. No flow obstruction	9" in stack 9" heated	80
MD-P-3	5:01-5:15	14 min		Same	80
Feb. 23, 1971					
MD-P-4	5:07-5:21	14 min	Coating line D Same as 2 & 5	9" in stack 9" heated	80
MD-P-5	5:07-5:21	14 min	Same	Same	80
MD-P-6	2:55-3:07	12 min	Coating line E Existing hole in stack. Good loc.	9" in stack 9" heated	80

DATA SHEET #3-ECD-A
(Analytical results in ppm)

Sample #	Coating	Laboratory*	CO	CH_4	CO_2	Organics (cylinder)	Organics (trap)	Organics (probe)
MD-P-2	Pigmented White vinyl 45.5 mg/4 sq in	C.C.	92.5	57.5	3500	95	480	707
MD-P-3	Same	M.I.	28	42	5627	7.0	3083	707
MD-P-4	Skim white vinyl 21 mg/4 sq in	C.C.	52	75	6720	278	1100	-
MD-P-5	Same	M.I.	48.0	44	5861	1	1250	-
MD-P-6	Gold lacquer 5 mg/4 sq in	M.I.	107	296	13416	34	372	-

*C.C. - Cal-Colonial
M.I. - Mellon Institute

DATA SHEET #3-ECD-B
(Solvent usage and calculated emission dates)

Sample No.	Total Organics	Flow Rate (scfm)	* Organic Emission (lb c/hr)
MD-P-2	1282	3625	8.89
MD-P-3	3797	3625	25.99
MD-P-4	1378	3475	9.10
MD-P-5	1251	3475	8.26
MD-P-6	406	-	-

*See Data Sheet #3-ECD-C for basis of calculation

DATA SHEET #3-ECD-C
Sample Calculation
(pounds carbon per hour)

The flow rate in standard cubic feet per minute is converted to liters per minute. Taking the average data for MD-P-2 and MD-P-2 and MD-P-3 as an example (see Data Sheet #3-ECD-B), this gives:

(1) $3.62 \times 10^3 \ \frac{ft^3}{min} \times 28.2 \ \frac{L}{ft^3} = 1.02 \times 10^5 \ \frac{L}{min}$

Since there are 2135 ppm $\mu\frac{L}{L}$ organics (as CO_2) in the gas stream, this amounts to an hourly emission of

(2) $1.02 \frac{L}{min} \times 60 \ \frac{min}{hr} \times 2135 \ \mu\frac{L}{L} = 1.31 \times 10^{10} \mu\frac{L}{hr} = 1.31 \times 10^4 \ \frac{L}{hr}$

At standard conditions (1 atm, 15.5°C), the number of grams of CO_2 is:

(3) $g(CO_2) = \frac{M.W. \times P \times V}{RT} = \frac{44 \times 1 \times 1.31 \times 10^4}{.082 \times 288.15} = 2.43 \times 10^4$ gm/hr

This is equal to:

(4) $\frac{12}{48} \times 2.43 \times 10^4 = 6.64 \times 10^3$ gm carbon/hr

or

(5) $6.64 \times \frac{1}{454} = 14.7$ lb carbon/hr emitted as organics

The calculation can be simplified by combining all of the conversion factors and multiplying by the determined scfm and ppm

lb carbon/hr = 1.90×10^{-6} x scfm x ppm

Data Sheet #5-ECD

Test No.: 1
Plant Code No.: 1-MD
Sampling Location
4.5 ft above roof
Level (Traverse at right angles)

Graphic Arts Technical Foundation
Environmental Control Division
Research Department
Pittsburgh, Pennsylvania 15213

Date: Feb. 22, 1971
GATF Personnel:
R. R. Gadomski
W. J. Green
Line D

Gas Velocity Data

Point No.	Time: 4:30 PM Vel. Head in. H_2O (h)	Temp °F	Velocity ft/sec	Time: 4:45 PM Vel. Head in. H_2O (h)	Temp °F	Velocity ft/sec
A-1	.28	170	38.4	B-1 .22	170	34.2
A-2	.42	170	47.0	B-2 .31	170	40.4
A-3	.35	170	43.0	B-3 .34	170	42.5
A-4	.33	170	41.8	B-4 .43	170	47.6
A-5	.38	170	44.8	B-5 .55	170	54.0
A-6	.42	170	47.0	B-6 .51	170	52.0
A-7	.32	170	41.2	B-7 .36	170	43.7
A-8	.21	170	33.3	B-8 .24	170	35.6
Av.		170	42.06		170	43.75

A. Av. velocity (traverse) ft/sec 42.90
B. Av. velocity (ref. pt.) ft/sec 44.7
C. Flue factor A/B .96
D. Pitot Tube correction factor(if any) 1.0
E. Gas density factory(ref. to air) 1.0
F. Corrected velocity B x C x D x E ft/sec 42.91
G. Area of flue, sq. ft. 1.76
H. Av. flue temp. °F 170°F
I. Flow rate @ stack cond.
F x G x 60, acfm 4531.3
J. P_s = 28.70
K. Corrected to std. cond.

Flow rate = $\frac{520 \times I \times P_s}{H + 460 \times 29.92}$, scfm 3625

$$\frac{520 \times 4531.3 \times 28.70}{630 \times 29.92} = 4531.3 \times .83 \times .96$$

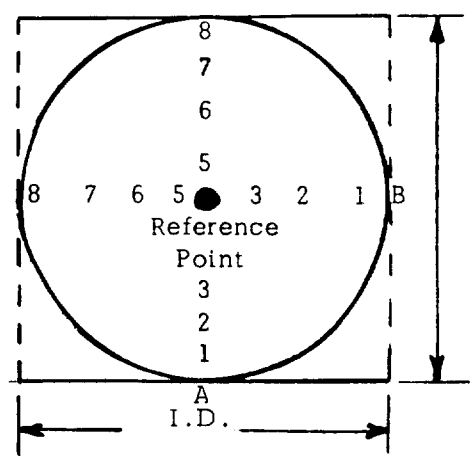

Static (ΔH) "H_2O = 0.40
P_g = - ΔH/13.6 = 0.03
P_{atm} "H_g = 28.73
$P_s = P_{atm} - P_g$ = 28.73-.03=28.70

Data Sheet #5-ECD

Test No.: 3
Plant Code No.: 1-MD
Sampling Location
Same as Test No. 1

Graphic Arts Technical Foundation
Environmental Control Division
Research Department
Pittsburgh, Pennsylvania 15213

Date: Feb. 24, 1971
GATF Personnel:
R.R. Gadomski
W. J. Green

Gas Velocity Data

Point No.	Time: 4:00 PM Vel. Head in. H_2O (h)	Temp °F	Velocity ft/sec	Time: 4:15 PM Vel. Head in. H_2O (h)	Temp °F	Velocity ft/sec
A-1	.375	180	45.0	B-1 .155	180	28.8
A-2	.45	180	49.2	B-2 .245	180	36.2
A-3	.43	180	48.2	B-3 .325	180	41.7
A-4	.41	180	46.8	B-4 .43	180	48.2
A-5	.47	180	50.2	B-5 .50	180	51.7
A-6	.44	180	47.7	B-6 .485	180	51.0
A-7	.31	180	40.1	B-7 .300	180	40.0
A-8	.20	180	32.8	B-8 .16	180	29.7
Av.		180	45.0		180	40.9

A. Av. velocity (traverse) ft/sec 42.85
B. Av. velocity (ref. pt.) ft/sec 47.50
C. Flue factor A/B .90
D. Pitot Tube correction factor (if any) 1.0
E. Gas density factory (ref. to air) 1.0
F. Corrected velocity B x C x D x E ft/sec 42.75
G. Area of flue, sq. ft. 1.76
H. Av. flue temp. °F 180
I. Flow rate @ stack cond.
F x G x 60, acfm 4514.4
J. P_s = 28.87
K. Corrected to std. cond.
Flow rate = $\frac{520 \times I \times P_s}{H + 460 \times 29.92}$, scfm 3475

$$4514.4 \times \frac{520}{640} \times \frac{28.87}{29.92} = 4514.4 \times .81 \times .96$$

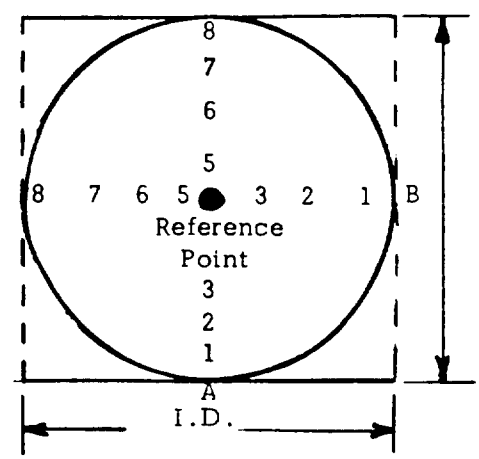

Static (ΔH) "H_2O = .42
P_g = - ΔH/13.6 = 0.03
P_{atm} "Hg = 28.90
$P_s = P_{atm} - P_g$ = 28.90-.03=28.87

Approved [illegible]

CARNEGIE-MELLON UNIVERSITY

MELLON INSTITUTE

RESEARCH SERVICES

Physical Measurements Laboratory (7615-1)

Fellow Dr. W. Green

Account No. Graphic Arts Technical Foundation P.O. #3104

Investigation Air Pollution Program

Investigation No. PML 71-203 (1 M.D.)

Date of Report April 14, 1971

NATURE OF REPORT: Preliminary ____ Progress ____ Final xx

The four cylinders which you submitted have been analyzed by the procedure described in a previous report dated October 2, 1970. The data are tabulated in Table I.

Table I

	Content, V/V % as CO_2			
Cylinder Identification	MD-P-1	#3	#4	#5
Cylinder Volume, CC NTP	313.5	287.9	292.0	269.5
Hydrogen	Trace	Trace	Trace	Trace
Carbon Monoxide	----	0.0048	0.0107	0.0028
Carbon Dioxide	0.0346	0.5861	1.3416	0.5627
Methane	----	0.0044	0.0296	0.0042
Organics	----	0.0001	0.0034	0.0007
Trap, Low Boilers	----	0.1140	----	0.2908
Trap, High Boilers	0.0130	0.0110	0.0372	0.0175
Probe, Low Boilers	0.0000_2	----	----	0.0619*
Probe, High Boilers	0.0006	----	----	0.0088*

*This value is one-half of the analytical total, since this probe was used to fill both cylinders #2 and #5.

PRE:jdf

Paul R. Eisaman, Fellow
Physical Measurements Laboratory

APR 16 1971
GATF

Form 111

CAL-COLONIAL CHEMSOLVE
CONSULTING AND RESEARCH LABORATORIES
871 EAST LAMBERT
LA HABRA, CALIFORNIA 90631
(714) TR 9-6057 (213) OW 1-4848

March 9, 1971

MAR 12 1971
GATF

Mr. William J. Green,
Environmental Control Division,
Research Department,
Graphic Arts Technical Foundation,
4015 Forbes Ave.,
Pittsburgh, Pa. 15213

Re: P.O. #07735; Analysis of two gas samples and "traps" for CO_2, CO, CH_4 and remaining hydrocarbons

Each of the samples was analyzed using a combination of gas chromatographic techniques coupled with an oxidation reduction section. The results are reported in parts per million (Vol.) based on standard CO_2. It was assumed the condensate in the trap was from the entire volume in the corresponding sample bottle.

Results:

S/N	Vol.	CO	CH_4	CO_2	H.C.(Bottle)	H.C.(Trap)
MD-P-4	305	52	75	6720	275	1100
MD-P-2	313	92.5	57.5	5500	95	480

Ref: Cal-Colonial 52071A

Respectfully submitted,

W.R. Hodson,
CAL-COLONIAL CHEMSOLVE.

Data Sheet #1-ECD

Graphic Arts Technical Foundation
Environmental Control Division
Research Department
Pittsburgh, Pennsylvania 15213

I. *Source Location Data

1. Firm Name: _____ Phone _____
2. Address: _____
3. Representative(s) Contacted: _____
4. Plant Code No.: 2-M.D.

II. Source and Sample Background Data

5. Date(s) of Test(s): January 25-26, 1972
6. Process(es) and Basic Equipment (incl. throughput rates): 5-lines, 3-coating lines; 2-printing with tandem coaters, 1-coating line controlled by thermal incinerator.
7. Product(s): Metal lithography, signs and displays, sign banks
8. Amounts Consumed (Monthly Av.)
   A. Paper or other substrates: Not applicable
   B. Inks and Solvents: See data sheet #2-ECD
9. Dryer or Oven Equipment:
   A. Type, manufacturer, model: Wagner, direct flame, circulating
   B. Air Flows (rated), Temp.: See Data Sheet #5-ECD
   C. Fuel or Heat Consumption: Est. 5 x 10^6 Btu/hr per oven
   D. Comment: No separate metering of gas, temp. of oven zones continuously monitored and regulated.
10. Stack Geometry:
   A. No. (Single, manifolded) 2 stacks per oven (1 used for ventilation)
   B. Cross-sectional area: #1 = 1.38', #2 = 4.90', #3 = 1.38', #4 = 1.76'
   C. Height above roof: 10 to 20 ft depending on particular line
   D. Approx. running length: 20 ft from top of oven to roof level
   E. Comment: Front stack on oven is main exhaust of of effluent while rear stack is only used for cooling and ventilation
11. APC Equipment (if any) One line controlled, remaining are uncontrolled.
12. General Comments: Sampling points were ideally located within recommended practice.

*Restricted use only.

Data Sheet #2-ECD

Test No. 1 Through 4
Plant Code No. 2-M.D.

Graphic Arts Technical Foundation
Environmental Control Division
Research Department
Pittsburgh, Pennsylvania 15213

Test Date: 1/25/72
Conditions See appropriate effluent sampling data sheet

Physical and Operational Plant Data

	Reading/Comments
Atmospheric pressure (at sampling location)	29.90
Temperature	32°F
Relative humidity	35%
Wind speed	10-20 mph (gusting to 50 mph)
Ambient temperature	26°F
db/wb ambient	—
db/wb stack	91-77°F
Flue gas - a) sampling point	208-270 depending on test conditions
b) stack exit	
APC - Inlet	not applicable
APC - Outlet	not applicable
Web	not applicable
Chill Exhaust	not applicable
Oven/Dryer (specify) - bake temperature	360-390°F depending on material processed
Static press stack "H_2O (ΔH)	0.03-0.30 depending on line as measured
Atmospheric "Hg	29.90
Press drop APC fan	not applicable
Press operating speed	44-70 sheets/min depending on process
Web width/sheet dimensions	(23-13/16-28-5/8") x (30-3/4-34-1/2")
No. printing units/No. plate cylinders	one
No. colors per side/coat thickness	one
Type of paper/sheet	Steel
Grade	finished
Wt. of paper/wt. of coating	(see below)

Ink Consumption - For printing (lithography aspect of operation) consumption was estimated at 0.75# per 1000 sheets.
For coating operation consumption is expressed in various coating thicknesses as noted:

A. Sizing - 4.8 mg/4 sq in.
B. Lacquer - 10.4 mg/4 sq in.
C. Varnish - 14.0 mg/4 sq in.
D. Pigmented coatings (range from 32.4-52.0 mg/4 sq in.

Definitions appropriate to metal decorating:
1-package = 112 sheets; 1-skid = 1120 sheets (or 10 packages)

Data Sheet #3-ECD

Graphic Arts Technical Foundation
Environmental Control Division
Research Department
Pittsburgh, Pennsylvania 15213

Plant Code No. 2-MD

Date: 1/25/72

Effluent Sampling Data

Sample #	Time	Period	Probe Configuration	Comments
#1 #2	11:20-11:35	15 min	Perpendicular and centered on stack diameter	Samples taken of 1-color (black) Lithography with trailing varnish coating application. Press speed of 60 sht/min; sheet size-26-7/8" x 31-7/8" (25# basic wt). Varnish-VDG505-2 (63.5% solvent) 14.0 mg/4 sq in Ink-black-D-15722 (40% solvent) consumption (est.) .75# per 1000 shts. Press Line #1
#3 #4 #5 #6	11:50-12:00 12:00-12:10 12:10-12:20 12:20-12:30	10 min 10 min 10 min 10 min	Same as above	Samples staggered over 40 minute period to obtain background emissions of press oven only. Press Line #1
#7 #8	1:55-2:10	15 min	Same as above	Samples taken of 1-color (pink) Lithography with no trailing varnish coating operation. Press speed of 60 shts/min. Ink consumption (est.) at 0.75# per 1000 shts. Sheet size-26-7/8" x 31-7/8" Press Line #3
#10 #13	2:15-2:30	15 min	Same as above	Samples taken of white (12183) alkyd coating. Press speed of 68 sh/min; sheet size-26-3/4" x 32-1/2"; 80# basic wt. 38.4 mg/4 sq in; (41% solvent) density of 10.2#/gal. *Actual usage rate of material determined on location as 15 gal/hr. Coating Line #4

Data Sheet #3-ECD

Graphic Arts Technical Foundation
Environmental Control Division
Research Department
Pittsburgh, Pennsylvania 15213

Plant Code No. 2-MD

Date: 1/25/72

Effluent Sampling Data

Sample #	Time	Period	Probe Configuration	Comments
#14 #15	2:50-3:05	15 min	Perpendicular and centered on stack diameter	Samples taken of sizing (8463-002). Press speed of 70 sh/min; sheet size 25-3/8" x 30-3/4"; 80# basic wt. 4.8 mg/4 sq in; (82% solvent), density of 7.38#/gal. Coating Line #2
#16 #17	3:10-3:25	15 min	Same as above	Same as samples #14 & 15 Coating Line #2

Data Sheet #3-ECD

Graphic Arts Technical Foundation
Environmental Control Division
Research Department
Pittsburgh, Pennsylvania 15213

Plant Code No. 2-M.D.

Date: 1/26/72

Effluent Sampling Data

Sample #	Time	Period	Probe Configuration	Comments
#18 #19	8:55-9:10	15 min	Perpendicular and inserted to center of stack diameter	Samples taken of gold lacquer (17923). Press speed of 65 sh/min; sheet size 26-1/8"x34-1/2"; 80# basic wt. 10.4 mg/4 sq in(75% solvent), density of 7.82#/gal. Coating Line #4
#22 #24	9:12-9:27	15 min	Same as above	Same as Samples #18 & #19 Coating Line #4
#25 #26	10:02-10:17	15 min	Same as above	Samples taken of white (3420) vinyl coating, press speed of 70 sh/min, sheet size-28-5/8" x 33-1/4" basic wt. 32.4 mg/4 sq in (60% solvent) density of 9.45#/gal. Coating Line #2
#27 #28	11:35-11:50 11:50-12:05	15 min	Same as above	Samples taken to obtain background emissions of coating oven only. Coating Line #4
#29 #30 #31 #32	2:45-2:55 2:55-3:06 3:07-3:17 3:18-3:29	10 min 11 min 10 min 11 min	Same as above	Samples taken of a beige (formula coating 340) alkyd coating, press speed of 44 shts/min, sheet size 23-13/16"x 31-9/16", basic wt. 80#, 52.0 mg/4 sq in (43% solvent) density of 9.8#/gal. Coating Line #4

DATA SHEET #3-ECD-A
(Analytical Results in ppm)

Plant Code No.	Date/Time	Process	Cylinder No.	Total Organics	CO	CH_4	CO_2
2-MD	1/25/72 11:50-12:30 pm	Press oven only (no lithography) application.	3	394	37	1705	7069
			4	553	20	1657	7394
			5	445	21	1733	7159
			6	232	33	1733	7973
	1/26/72 11:35-12:05 pm	Coating oven only (no coating application)	27	55	not detectable	115	4579
			28	96	trace	118	4680
	1/25/72 1:55-2:10 pm	1-color (pink) lithography no trailing varnish application. Ink coverage - .0075 #/sheet.	7	162	26	1361	7572
			8	130	31	1387	7284
	1/25/72 11:20-11:35 am	1-color (blk) lithography w/trailing varnish application. 14.0 mg/4 sq in (63.5% solvent). Ink coverage .0075 #/sheet; coating coverage .0066 #/sheet	1	9124	68	1707	8515
			2	8177	77	1562	8064
	1/25/72 2:50-3:25 pm	Sizing, 4.8 mg/4 sq in (82% solvent) coverage of .0021 #/sheet	14	1944	trace	325	6978
			15	1491	trace	328	7183
			16	2750	trace	292	7050
			17	1808	trace	305	6752
	1/26/72 8:55-9:27 am	Gold lacquer coating, 10.4 mg/4 sq in (75% solvent) coverage of .0052 #/sheet	18	4600	trace	88	6663
			19	65	trace	3	373
			22	4206	trace	84	6408
			24	4288	trace	92	7038
	1/25/72 2:15-2:30 pm	White alkyd coating 38.4 mg/4 sq in (41% solvent), coverage of .018 #/sheet	10	4917	trace	45	5785
			13	4949	trace	54	5820

Data Sheet #3-ECD-A continued

Plant Code No.	Date/Time	Process	Cylinder No.	Total Organics	CO	CH_4	CO_2
2-MD	1/26/72 10:02-10:17 am	White vinyl coating 32.4 mg/4 sq in (60% solvent), coverage of .017 #/sheet	25	6997	trace	331	6729
			26	6095	trace	312	6728
	1/26/72 2:45-3:29 pm	Beige alkyd coating 52.0 mg/4 sq in (43% solvent), coverage of .021 #/sheet	29	3871	trace	228	5514
			30	3244	trace	210	5926
			31	2773	not detectable	164	5794
			32	61	trace	195	5422

DATA SHEET #3-ECD-B

Press/Coating No.	Cylinder No.	Total Organics (ppm)	Flow Rate (scfm)	* Organic Emissions (lb/hr)
Press Line #1	1	9124	900	15.47
	2	8177	900	13.94
	3	394	900	0.68
	4	553	900	0.93
	5	445	900	0.75
	6	232	900	0.39
Coating Line #2	14	1944	2300	8.36
	15	1491	2300	6.60
	16	2750	2300	11.88
	17	1808	2300	7.92
	25	6997	2300	30.80
	26	6095	2300	26.84
Press Line #3	7	162	925	0.27
	8	130	925	0.22
Coating Line #4	10	4917	2300	21.56
	13	4949	2300	21.78
	18	4600	2300	20.24
	19	65	2300	0.28
	22	4206	2300	18.48
	24	4288	2300	18.92
	27	55	2300	0.24
	28	96	2300	0.42
	29	3871	2300	17.02
	30	3244	2300	14.25
	31	2773	2300	12.18
	32	61	2300	0.27

*Calculated on the following basis:

$$\text{lb C/hr} = 1.90 \times 10^{-6} \text{ (scfm) (ppm)}$$

DATA SHEET 3-ECD-C
Compilation of Operational Data from Plant Test for Use in Determining Calculated Emission Rate

Plant Code No. 2-MD

Type of Operation	Sheet Size (sq in)	Coater Speed Sh/min	Coater Speed Sh/hr	Film Thickness (mg/sq in)	Solvent/Solids
1-color litho only	852.2	60	3420	*	15/85
1-color w/varnish	852.2	60	3420	3.5	63.5/36.5
Sizing	790.2	70	3990	1.2	82/18
Gold lacquer	901.3	65	3705	2.8	75/25
White alkyd	869.4	68	3876	9.6	41/59
Beige alkyd	748.1	44	2508	13.0	43/57
White vinyl	951.7	70	3990	8.1	60/40

*Printing only, no film thickness, estimated usage rate of 0.0075 #/sheet for one color;).0010 #/sheet for two-color work.

DATA SHEET #3-ECD-D
Comparison of Calculated and Observed Emission Rates

Plant Code No. 2-MD

Type of Operation	Organic Emission[a] obs.	Organic Emission[a] calc.	E_{obs}/E_{calc}[b]
1-color w/varnish	14.72	39.41	0.39
Sizing	8.69	44.50	0.20
Gold lacquer	21.01	56.07	0.37
White alkyd	21.67	51.14	0.42
Beige alkyd	15.63	49.02	0.32
White vinyl	28.82	76.00	0.25

a. Expressed as lb carbon/hr
b. C as in Equation (4) data treatment section of report

Data Sheet #5-ECD

Test No.: —
Plant Code No.: 2-M.D.
Sampling Location
Press Line #1

Graphic Arts Technical Foundation
Environmental Control Division
Research Department
Pittsburgh, Pennsylvania 15213

Date: 1/25/72
GATF Personnel:
R. R. Gadomski
W. J. Green

Gas Velocity Data

Point No.	Time: 9:15-9:30 am			Time: 9:30-9:40 am		
	Vel. Head in. H_2O (h)	Temp °F	Velocity ft/sec	Vel. Head in. H_2O (h)	Temp °F	Velocity ft/sec
1	.22	210	12.2	.24	210	12.8
2	.24	210	12.8	.30	210	14.2
3	.30	210	14.2	.32	210	14.7
4	.32	210	14.7	.32	210	14.7
5	.30	210	14.2	.30	210	14.2
6	.24	210	12.8	.24	210	12.8
Av.		210	13.5		210	13.9

A. Av. velocity (traverse) ft/sec 13.7
B. Av. velocity (ref. pt.) ft/sec n/a
C. Flue factor A/B n/a
D. Pitot Tube correction factor(if any) 1.0
E. Gas density factory(ref. to air) 1.0
F. Corrected velocity B x C x D x E ft/sec 13.7
G. Area of flue, sq. ft. 1.38
H. Av. flue temp. °F 210
I. Flow rate @ stack cond.
F x G x 60, acfm 1150
J. P_s = 29.90
K. Corrected to std. cond.
Flow rate = $\frac{520 \times I \times P_s}{H + 460 \times 29.92}$, scfm 900

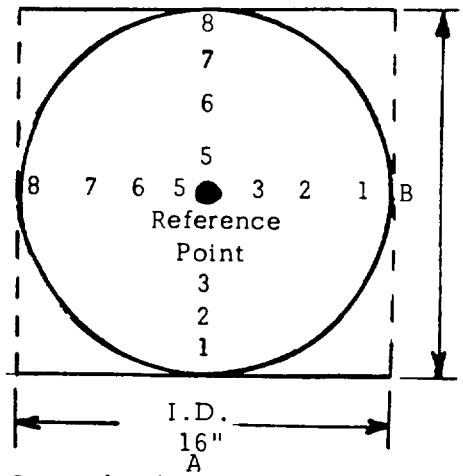

Static (ΔH) "H_2O = 0.03
P_g = - ΔH/13.6 = --
P_{atm} "Hg = 29.90
$P_s = P_{atm} - P_g$ = 29.90

Data Sheet #5-ECD

Test No.: —
Plant Code No.: 2-MD
Sampling Location
Coating Line #2

Graphic Arts Technical Foundation
Environmental Control Division
Research Department
Pittsburgh, Pennsylvania 15213

Date: 1/25/72
GATF Personnel:
R. R. Gadomski
W. J. Green

Gas Velocity Data

Point No.	Time: 9:50-10:00 am			Time: 10:05-10:15 am		
	Vel. Head in. H_2O (h)	Temp °F	Velocity ft/sec	Vel. Head in. H_2O (h)	Temp °F	Velocity ft/sec
1	.10	270	8.6	.12	270	9.3
2	.15	270	10.4	.20	270	12.3
3	.20	270	12.3	.17	270	11.2
4	.17	270	11.2	.20	270	12.3
5	.20	270	12.3	.17	270	11.2
6	.17	270	11.2	.15	270	10.4
Av.		270	11.0		270	11.1

A. Av. velocity (traverse) ft/sec 11.0
B. Av. velocity (ref. pt.) ft/sec n/a
C. Flue factor A/B n/a
D. Pitot Tube correction factor(if any) 1.0
E. Gas density factory(ref. to air) 1.0
F. Corrected velocity B x C x D x E ft/sec 11.0
G. Area of flue, sq. ft. 4.90
H. Av. flue temp. °F 270
I. Flow rate @ stack cond.
F x G x 60, acfm 3250
J. P_s = 29.87
K. Corrected to std. cond.
Flow rate = $\frac{520 \times I \times P_s}{H + 460 \times 29.92}$, scfm 2300

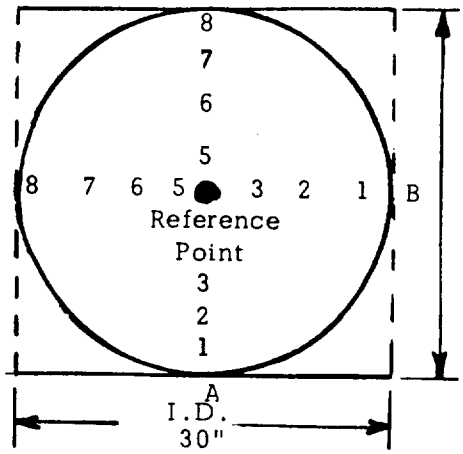

Static (ΔH) "H_2O = 0.30
$P_g = -\Delta H/13.6$ = 0.03
P_{atm} "H_g = 29.90
$P_s = P_{atm} - P_g$ = 29.87

Data Sheet #[illegible]

Test No.: —
Plant Code No.: 2-MD
Sampling Location
Press Line #3

Graphic Arts Technical Foundation
Environmental Control Division
Research Department
Pittsburgh, Pennsylvania 15213

Date: 1/25/72
GATF Personnel:
R. R. Gadomski
W. J. Green

Gas Velocity Data

Point No.	Time: 12:45-1:00 pm			Time: 1:05-1:15 pm		
	Vel. Head in. H_2O (h)	Temp °F	Velocity ft/sec	Vel. Head in. H_2O (h)	Temp °F	Velocity ft/sec
1	.22	210	12.2	.22	210	12.2
2	.30	210	14.2	.30	210	14.2
3	.38	210	15.8	.34	210	15.1
4	.38	210	15.8	.38	210	15.8
5	.34	210	15.1	.34	210	15.1
6	.22	210	12.2	.24	210	12.8
Av.		210	14.2		210	14.2

A. Av. velocity (traverse) ft/sec 14.2
B. Av. velocity (ref. pt.) ft/sec n/a
C. Flue factor A/B n/a
D. Pitot Tube correction factor (if any) 1.0
E. Gas density factory (ref. to air) 1.0
F. Corrected velocity B x C x D x E ft/sec 14.2
G. Area of flue, sq. ft. 1.38
H. Av. flue temp. °F 210
I. Flow rate @ stack cond.
F x G x 60, acfm 1200
J. P_s = 29.94
K. Corrected to std. cond.
Flow rate = $\frac{520 \times I \times P_s}{H + 460 \times 29.92}$, scfm 925

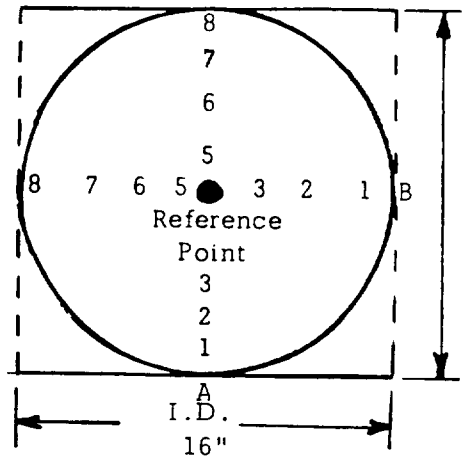

Static (ΔH) "H_2O = 0.04
P_g = - ΔH/13.6 = --
P_{atm} "Hg = 29.94
$P_s = P_{atm} - P_g$ = 29.94

Data Sheet #5-ECD

Test No.: —
Plant Code No.: 2-MD
Sampling Location
Coating Line #4

Graphic Arts Technical Foundation
Environmental Control Division
Research Department
Pittsburgh, Pennsylvania 15213

Date: 1/25/72
GATF Personnel:
R. R. Gadomski
W.J. Green

Gas Velocity Data

Point No.	Time: 1:25-1:35 pm			Time: 1:40-1:45 pm		
	Vel. Head in.H_2O (h)	Temp °F	Velocity ft/sec	Vel. Head in.H_2O (h)	Temp °F	Velocity ft/sec
1	1.0	250	26.7	1.0	250	26.7
2	1.0	250	26.7	1.0	250	26.7
3	1.5	250	32.7	1.5	250	32.7
4	1.5	250	32.7	1.5	250	32.7
5	1.5	250	32.7	1.0	250	26.7
6	1.0	250	26.7	1.0	250	26.7
Av.		250	29.7		250	28.7

A. Av. velocity (traverse) ft/sec 29.2
B. Av. velocity (ref. pt.) ft/sec n/a
C. Flue factor A/B n/a
D. Pitot Tube correction factor(if any) 1.0
E. Gas density factory(ref. to air) 1.0
F. Corrected velocity B x C x D x E ft/sec 29.2
G. Area of flue, sq. ft. 1.76
H. Av. flue temp. °F 250
I. Flow rate @ stack cond.
F x G x 60, acfm 3100
J. P_s = 29.94
K. Corrected to std. cond.
Flow rate = $\frac{520 \times I \times P_s}{H + 460 \times 29.92}$, scfm 2300

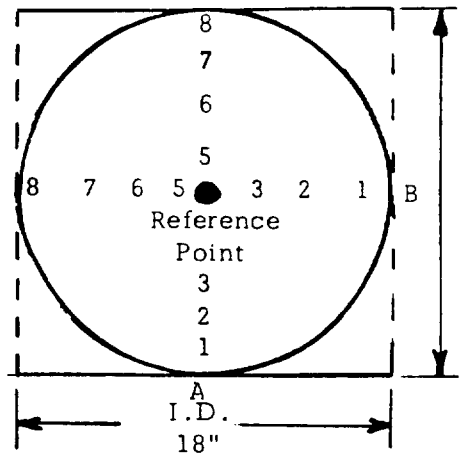

Static (ΔH) "H_2O = 0.03
P_g = - ΔH/13.6 = —
P_{atm} "Hg = 29.94
$P_s = P_{atm} - P_g$ = 29.94

Approved

CARNEGIE-MELLON UNIVERSITY

MELLON INSTITUTE

RESEARCH SERVICES

FEB 28 1972

Physical Measurements Laboratory (7615-2)

GATF

Fellow Mr. Ray Gadomski (2)

Account No. Graphic Arts Technical Foundation P.O. #3104

Investigation Air Pollution Program

Investigation No. PML 72-201 (2-MD)

Date of Report February 18, 1972

NATURE OF REPORT: Preliminary ____ Progress ____ Final x

The twenty-six samples of stack gas effluent which you submitted have been analyzed by the procedure described in a recent report dated December 17, 1971. The data are tabulated in the attached table.

Paul R. Eisaman
Fellow
Physical Measurements Laboratory

PRE:jdf

R&T: 2/23/72

Form 111

Table I

Stack Gas Samples

Code 2 - M.D.

Cylinder No.	1	2	3	4	5	6
Sample Volume, cc NTP	297	265	292	289	293	293
Content, v/v % as CO_2						
Carbon Monoxide	0.0068	0.0077	0.0037	0.0020	0.0021	0.0033
Carbon Dioxide	0.8515	0.8064	0.7069	0.7394	0.7159	0.7973
Methane	0.1707	0.1562	0.1705	0.1657	0.1733	0.1733
Organics	0.0141	0.0123	0.0121	0.0120	0.0122	0.0120
Traps, Low Boilers	0.8457	0.7694	0.0237	0.0123	0.0295	0.0099
Traps, High Boilers	0.0526	0.0360	0.0036	0.0310	0.0028	0.0013

Cylinder No.	7	8	10	13	14	15
Sample Volume, cc NTP	292	300	305	288	293	289
Content, v/v % as CO_2						
Carbon Monoxide	0.0026	0.0031	trace	trace	trace	trace
Carbon Dioxide	0.7572	0.7284	0.5785	0.5820	0.6978	0.7183
Methane	0.1361	0.1387	0.0045	0.0054	0.0325	0.0328
Organics	0.0096	0.0099	0.0006	0.0004	0.0027	0.0029
Traps, Low Boilers	0.0057	0.0009	0.4731	0.4572	0.1898	0.1424
Traps, High Boilers	0.0009	0.0022	0.0180	0.0373	0.0019	0.0038

Cylinder No.	16	17	18	19	22	24
Sample Volume, cc NTP	291	293	311	308	305	303
Content, v/v % as CO_2						
Carbon Monoxide	trace	trace	trace	trace	trace	trace
Carbon Dioxide	0.7050	0.6752	0.6663	0.0373	0.6408	0.7038
Methane	0.0292	0.0305	0.0088	0.0003	0.0084	0.0092
Organics	0.0021	0.0023	0.0007	0.0000	0.0006	0.0007
Traps, Low Boilers	0.2683	0.1784	0.4524	0.0050	0.4111	0.4206
Traps, High Boilers	0.0046	0.0001	0.0069	0.0015	0.0089	0.0075

Table I (continued)

Cylinder No.	25	26	27	28	29	30
Sample Volume, cc NTP	310	304	293	298	284	275
Content, v/v % as CO_2						
Carbon Monoxide	trace	trace	----	trace	trace	trace
Carbon Dioxide	0.6729	0.6728	0.4579	0.4680	0.5514	0.5926
Methane	0.0331	0.0312	0.0115	0.0118	0.0228	0.0210
Organics	0.0025	0.0025	0.0007	0.0008	0.0016	0.0015
Traps, Low Boilers	0.6912	0.5912	0.0028	0.0084	0.3540	0.2996
Traps, High Boilers	0.0060	0.0158	0.0020	0.0004	0.0315	0.0233

Cylinder No.	31	32
Sample Volume, cc NTP	277	290
Content, v/v % as CO_2		
Carbon Monoxide	---	trace
Carbon Dioxide	0.5794	0.5422
Methane	0.0164	0.0195
Organics	0.0011	0.0012
Traps, Low Boilers	0.2562	0.0032
Traps, High Boilers	0.0200	0.0017

Data Sheet #1-ECD

Graphic Arts Technical Foundation
Environmental Control Division
Research Department
Pittsburgh, Pennsylvania 15213

I. *Source Location Data

1. Firm Name: _____ Phone _____
2. Address: _____
3. Representative(s) Contacted: _____
4. Plant Code No.: 3-MD

II. Source and Sample Background Data

5. Date(s) of Test(s): February 21, 22, 23, 1972
6. Process(es) and Basic Equipment (incl. throughput rates): 5-process lines, 3-coating lines, 2-printing lines w/trailing coater, 2 ovens per coating line, 1 or 2-color lithography, generally lighter weight materials applied on front oven; heavier coatings in rear ovens.
7. Product(s): closures
8. Amounts Consumed (Monthly Av.)
   A. Paper or other substrates: variable
   B. Inks and Solvents: See Data Sheets No. 2 and No. 3-ECD
9. Dryer or Oven Equipment:
   A. Type, manufacturer, model: Wagner, Young Bros.
   B. Air Flows (rated), Temp.: See Data Sheets No. 5-ECD
   C. Fuel or Heat Consumption: Est. 5×10^6 Btu/hr per oven
   D. Comment: No separate metering of gas, ovens are old, only temp. of various oven zones continuously recorded.
10. Stack Geometry:
   A. No. (Single, manifolded) Single exhaust system per oven
   B. Cross-sectional area: See Data Sheets No. 5-ECD
   C. Height above roof: Each stack extends 20 ft above roof level
   D. Approx. running length: 30 ft from top of oven
   E. Comment: Several ovens utilize two-stack system, one exhaust for cooling and make up air, the other for exhaust of effluent
11. APC Equipment (if any) None, no rain cap arrangement on any stacks tested.
12. General Comments: Sampling points were ideally located within recommended sampling practice.

*Restricted use only.

Data Sheet #2-ECD

Test No. —
Plant Code No. 3-MD

Graphic Arts Technical Foundation
Environmental Control Division
Research Department
Pittsburgh, Pennsylvania 15213

Test Date: 2/22-23/72
Conditions See appropriate Data Sheet No. 3-ECD

Physical and Operational Plant Data

		Reading/Comments
Atmospheric pressure	(test site)	29.87" Hg.
Temperature	(test site)	10-20°F (variable)
Relative humidity	(test site)	75%
Wind speed	Ambient	Variable 5-30 mph (west & north westerly)
Ambient temperature	(test site)	10-20°F (depending on time of day)
db/wb ambient		—
db/wb stack		67/49°F
Flue gas - a) sampling point		See individual reading on Data
b) stack exit		Sheet No. 5-ECD
APC - Inlet		Not applicable
APC - Outlet		Not applicable
Web		Not applicable
Chill Exhaust		Not applicable
Oven/Dryer (specify) - bake temperature		Bake temperature ranged from 290°F to 390°F depending on material
Static press stack "H_2O	(ΔH)	See specific Data Sheet No. 5-ECD
Atmospheric "Hg		29.87" Hg
Press drop APC fan		Not applicable
Press operating speed		65 to 82 sheets per minute
Web width/sheet dimensions		See Data Sheet No. 3-ECD
No. printing units/No. plate cylinders		1 or 2
No. colors per side/coat thickness		1
Type of paper/sheet		Steel
Grade		not applicable
Wt. of paper/wt. of coating		See Specific Data Sheet No. 3-ECD

Ink Consumption:
0.5-0.75 #/1000 sheets/color
Coating Consumption:
Gold and clear lacquer - 350 sheets/gal
Vinyl white - 150 sheets/gal
Varnish - 325 sheets/gal
Enamel buff - 150 sheets/gal
Sizing - 350 sheets/gal
Plasticized white - 150 sheets/gal

Data Sheet #3-ECD

Graphic Arts Technical Foundation
Environmental Control Division
Research Department
Pittsburgh, Pennsylvania 15213

Plant Code No. 3-MD

Date: Feb. 22, 1972

Effluent Sampling Data

Sample #	Time	Period	Probe Configuration	Comments
#1 #2	9:30-9:45	15 min	Perpendicular and inserted to center of stack diameter	Duplicate samples of a gold lacquer, film wt. 5.5 mg/4 sq in (85.23%) solvent. Press speed - 82 sheets/min Sheet size - 876.02 sq in Oven cap. - 800 sheets Line No. E
#3 #4	10:30-10:45	15 min	Same as above	Duplicate samples of a vinyl white coating, film wt. 41.5 mg/4 sq (62.66%) Press speed - 82 sheets/min Sheet Dimensions - same as above Oven cap. - 1200 sheets Line No. F
#9 #10	11:00-11:15	15 min	Same as above	Duplicate samples of a 1-color (red) lithography (15%) with no varnish application. Press speed - 66 sheets/min Sheet dimensions - 827.22 sq in Oven cap. - 1700 sheets Line No. B
#7 #8	11:30-11:45	15 min	Same as above	Duplicate samples of a 1-color (red) lithography w/varnish application. Film wt. 11.0 mg/4 sq in (61.76%) Press speed - 65 sheets/min Sheet dimen. - 714.91 sq in Line No. A
#5 #6	1:45-2:00	15 min	Same as above	Duplicate samples of a 2-color (black & blue) lithography (15%) w/no varnish application Press speed - 65 sheets/min Sheet dimen. - 645.72 sq in Line No. A

Data Sheet #3-ECD

Graphic Arts Technical Foundation
Environmental Control Division
Research Department
Pittsburgh, Pennsylvania 15213

Plant Code No. 3-MD

Date: Feb. 22, 1972

Effluent Sampling Data

Sample #	Time	Period	Probe Configuration	Comments
#11 #12	2:25-2:40	15 min	Same as above	Duplicate samples of a 2-color (black & blue) lithographing with varnish appl. Film wt. 11.0 mg/4 sq in (53.94%) Press speed & sheet dim. - same as samples #5 and #6. Line No. A
#13 #14	3:45-4:00	15 min	Perpendicular and inserted to center of stack dia.	Duplicate samples of a modified phenolic varnish Film wt. - 8.5 mg/4 sq in (70.93% solv.) Press speed - 74 sheets/min Oven cap. - 800 sheets Line No. C
#15 #16	4:05-4:20	15 min	Same as above	Duplicate samples of an enamel buff coating Film wt. 47.0 mg/4 sq in (67.54%) Press speed and sheet dimension same as Samples #13 and #14 Oven cap. - 1200 sheets Line No. D

Data Sheet #3-ECD

Graphic Arts Technical Foundation
Environmental Control Division
Research Department
Pittsburgh, Pennsylvania 15213

Plant Code No. 3-MD

Date: Feb. 23, 1972

Effluent Sampling Data

Sample #	Time	Period	Probe Configuration	Comments
#17 #18	9:35-9:50	15 min	Perpendicular and inserted to center of stack dia.	Duplicate samples of sizing Film wt. of 4.0 mg/4 sq in (82.50% solv.) Press speed - 82 sheets/min Sheet dimen. - 675.91 sq in Oven cap.- 800 sheets Line No. G
#19 #20	11:05-11:20	15 min	Same as above	Duplicate samples of clear lacquer, Film wt. - 16.0 mg/4 sq in (84.64%) Press speed - 82 sheets/min Sheet dimen. - 700.06 sq in Oven cap. - 800 sheets Line No. G
#21 #22	12:45-1:00	15 min	Same as above	Duplicate samples of a plasticized white coating Film wt. - 37.5 mg/4 sq in (60.62%) Press speed - 82 sheets/min Sheet dimen. - 645.72 sq in Oven cap. - 800 sheets Line No. E.

DATA SHEET #3-ECD-A
(Analytical Results in ppm)

Plant Code No.	Date/Time	Process	Cylinder No.	Total Organics (ppm)	CO (ppm)	CH_4 (ppm)	CO_2 (ppm)
3-MD	2/22/72 11:00-11:15 am	1-color (red) lithography, no trailing varnish application. Ink coverage 0.00075 #/sheet (15% solvent content)	9 10	64 67	trace trace	314 284	10085 10299
	2/22/72 11:30-11:45 am	1-color (red) lithography w/ trailing varnish application 11.0 mg/4 sq in (61.76% solvent). Ink coverage 0.00075 #/sheet; coating coverage 0.0043 #/sheet	7 8	2140 2082	14 trace	425 393	11522 11238
	2/22/72 1:45-2:00 pm	2-color (blk & blue) lithography, no trailing varnish application. Ink coverage 0.00050 #/sheet/color (15% solvent content)	5 6	133 87	26 37	798 687	5306 4960
	2/22/72 2:25-2:40 pm	2-color (blk & blue) lithography w/trailing varnish application 11.0 mg/4 sq in (53.94% solvent). Ink coverage 0.00050 #/sheet/color coating coverage-0.0039 #/sheet	11 12	2185 1442	8 5	229 217	10010 10384
	2/23/72 9:35-9:50 am	Sizing, 4.0 mg/4 sq in (82.50% solvent) coverage of 0.0015 #/sheet	17 18	5573 5447	27 23	459 479	6959 7032
	2/22/72 9:30-9:45 am	Gold lacquer coating, 5.5 mg/4 sq in (85.23% solvent) coverage of 0.0027 #/sheet	1 2	6052 6785	trace trace	124 135	3919 4493

Data Sheet #3-ECD-A continued

Plant Code No.	Date/Time	Process	Cylinder No.	Total Organics (ppm)	CO (ppm)	CH_4 (ppm)	CO_2 (ppm)
3-MD	2/22/72 3:45-4:00 pm	Modified phenolic varnish 8.5 mg/4 sq in (70.93% solvent) coverage of 0.0041 #/sheet	13	1769	trace	11	9041
			14	1524	14	11	9375
	2/23/72 11:05-11:20 pm	Clear lacquer coating, 16.0 mg/4 sq in (84.64% solvent) coverage of 0.0062 #/sheet	19	20363	17	540	9411
			20	21405	18	547	9387
	2/23/72 12:45-1:00 pm	Plasticized white coating, 37.5 mg/4 sq in (60.62% solvent) coverage of 0.014 #/sheet	21	8295	23	408	4648
			22	9137	13	390	4468
	2/22/72 10:30-10:45 am	Vinyl white coating 41.5 mg/4 sq in (62.55% solvent) coverage of 0.020 #/sheet	3	7408	trace	76	3706
			4	13773	24	116	5669
	2/22/72 4:05-4:20 pm	Enamel buff coating 47.0 mg/4 sq in (62.54% solvent) coverage of 0.022 #/sheet	15	20045	8	9	3825
			16	21684	43	9	3755

DATA SHEET #3-ECD-B
(calculated emission rates)

Press/Coating Line No.	Cylinder No.	Total Organics (ppm)	Flow Rate (scfm)	* Organic Emissions (lb/hr)
A	5	133	1700	0.27
	6	87	1700	0.42
	7	2140	1700	6.78
	8	2082	1700	6.72
	11	2185	1700	7.04
	12	1442	1700	4.65
B	9	64	3700	0.45
	10	67	3700	0.47
C	13	1769	1700	5.71
	14	1524	1700	4.91
D	15	20045	2400	91.20
	16	21684	2400	98.49
E	1	6052	4200	48.40
	2	6785	4200	54.24
	21	8295	4200	66.32
	22	9137	4200	73.04
F	3	7408	3950	56.24
	4	13773	3950	104.12
G	17	5573	3000	31.35
	18	5447	3000	30.78
	19	20363	3000	115.71
	20	21405	3000	121.98

*calculated on the following basis:
lb carbon/hr = 1.90×10^{-6} x scfm x ppm

DATA SHEET #3-ECD-C
Compilation of Operational Data from Plant Test for Use in Determining Calculated Emission Rate

Plant Code No. 3-MD

Type of Operation	Sheet Size (sq in)	Coater Speed sh/min	Coater Speed sh/hr	Film Thickness (mg/sq in)	Solvent/Solids
1-color litho only	827.2	65	3762	*	15/85
2-color litho	645.7	65	3705	*	15/85
1-color w/varnish	714.9	65	3705	2.75	61.8/38.2
2-color w/varnish	645.7	65	3705	2.75	53.9/46.1
Sizing	675.9	82	4674	1.0	82.5/17.5
Phenolic varnish	867.8	74	4218	2.125	70.9/29.1
Clear lacquer	700.0	82	4674	4.0	82.5/17.5
Gold lacquer	876.0	82	4674	1.375	85.2/14.8
White vinyl	876.0	82	4674	10.375	62.6/37.4
Plasticized white	645.7	82	4674	9.375	60.6/39.4
Enamel buff	867.8	74	4218	11.75	67.5/32.5

*Printing only, no film thickness, estimated usage rate of 0.00075 #/sheet for one color; 0.0010 #/sheet for two-color work.

DATA SHEET #3-ECD-D
Comparison of Calculated and Observed Emission Rates

Plant Code No. 3-MD

Type of Operation	Organic Emission[a] obs.	Organic Emission[a] calc.	$E_{obs.}/E_{calc.}$[b]
1-color w/varnish	6.75	32.14	0.21
2-color w/varnish	5.84	27.97	0.21
Sizing	31.07	46.25	0.67
Phenolic varnish	5.31	43.13	0.12
Clear lacquer	118.84	169.79	0.70
Gold lacquer	51.32	73.22	0.70
White vinyl	80.18	156.45	0.48
Plasticized white	69.68	133.15	0.52
Enamel buff	94.85	145.72	0.52

a. Expressed as lb carbon/hr
b. C as in Equation (4) data treament section of this report.

Data Sheet #5-ECD

Test No.: 1
Plant Code No.: 3-MD
Sampling Location
Line A

Graphic Arts Technical Foundation
Environmental Control Division
Research Department
Pittsburgh, Pennsylvania 15213

Date: Feb. 22, 1972
GATF Personnel:
R. R. Gadomski
A. V. Gimbrone

Gas Velocity Data

Point No.	Time: 11:00-11:15			Time: 12:00-12:15		
	Vel. Head in. H_2O (h)	Temp °F	Velocity ft/sec	Vel. Head in. H_2O (h)	Temp °F	Velocity ft/sec
1	.08	170	20.9	.10	170	22.9
2	.10	170	22.9	.12	170	24.7
3	.12	170	24.7	.14	170	27.0
4	.12	170	24.7	.14	170	27.0
5	.12	170	24.7	.12	170	24.7
6	.10	170	22.9	.10	170	22.9
Av.		170	23.5		170	24.9

A. Av. velocity (traverse) ft/sec 24.2
B. Av. velocity (ref. pt.) ft/sec n/a
C. Flue factor A/B n/a
D. Pitot Tube correction factor (if any) none
E. Gas density factory (ref. to air) 1.0
F. Corrected velocity B x C x D x E ft/sec 24.2
G. Area of flue, sq. ft. 1.38
H. Av. flue temp. °F 170
I. Flow rate @ stack cond.
F x G x 60, acfm 2100
J. P_s = 29.87
K. Corrected to std. cond.
Flow rate = $\frac{520 \times I \times P_s}{H + 460 \times 29.92}$, scfm 1700

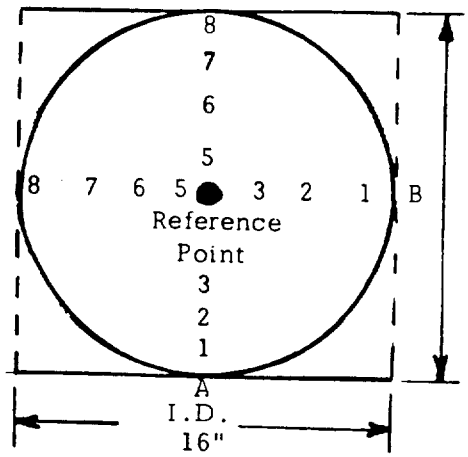

Static (ΔH) "H_2O = 0.02
P_g = - ΔH/13.6 = 0
P_{atm} "Hg = 29.87
$P_s = P_{atm} - P_g$ = 29.87

Data Sheet #5-ECD

Test No.: 2
Plant Code No.: 3-MD
Sampling Location
Line B

Graphic Arts Technical Foundation
Environmental Control Division
Research Department
Pittsburgh, Pennsylvania 15213

Date: Feb. 22, 1972
GATF Personnel:
R. R. Gadomski
A. V. Gimbrone

Gas Velocity Data

Point No.	Time: 10:50-11:00			Time: 11:05-11:15		
	Vel. Head in.H_2O (h)	Temp °F	Velocity ft/sec	Vel. Head in.H_2O (h)	Temp °F	Velocity ft/sec
1	.08	170	20.9	.08	170	20.9
2	.10	170	22.9	.10	170	22.9
3	.12	170	24.7	.12	170	24.7
4	.14	170	27.0	.12	170	24.7
5	.12	170	24.7	.12	170	24.7
6	.10	170	22.9	.10	170	22.9
Av.		170	23.9		170	23.5

A. Av. velocity (traverse) ft/sec 23.7
B. Av. velocity (ref. pt.) ft/sec n/a
C. Flue factor A/B n/a
D. Pitot Tube correction factor(if any) none
E. Gas density factory(ref. to air) 1.0
F. Corrected velocity B x C x D x E ft/sec 23.7
G. Area of flue, sq. ft. 3.14
H. Av. flue temp. °F 170
I. Flow rate @ stack cond.
F x G x 60, acfm 4464
J. P_s = 29.87
K. Corrected to std. cond.
Flow rate = $\frac{520 \times I \times P_s}{H + 460 \times 29.92}$, scfm 3700

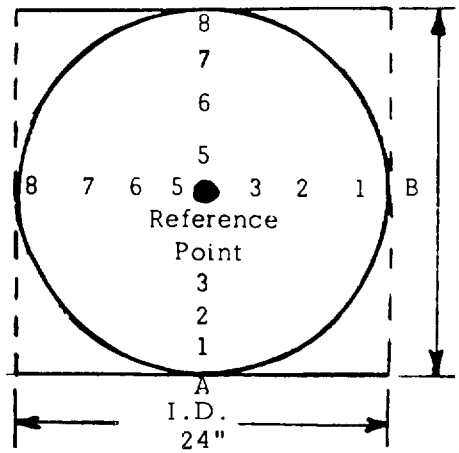

Static (ΔH) "H_2O = 0.05
P_g = $-\Delta H/13.6$ = 0
P_{atm} "Hg = 29.87
$P_s = P_{atm} - P_g$ = 29.87

Data Sheet #5-ECD

Test No.: 3
Plant Code No.: 3-MD
Sampling Location
Line C

Graphic Arts Technical Foundation
Environmental Control Division
Research Department
Pittsburgh, Pennsylvania 15213

Date: Feb. 22, 1972
GATF Personnel:
R. R. Gadomski
A. V. Gimbrone

Gas Velocity Data

Point No.	Time: 3:00-3:15 Vel. Head in. H_2O (h)	Temp °F	Velocity ft/sec	Time: 3:45-4:00 Vel. Head in. H_2O (h)	Temp °F	Velocity ft/sec
1	0.05	260	17.4	0.05	260	17.4
2	0.05	260	17.4	0.05	260	17.4
3	0.05	260	17.4	0.05	260	17.4
4	0.05	260	17.4	0.05	260	17.4
5	0.05	260	17.4	0.05	260	17.4
6	0.05	260	17.4	0.05	260	17.4
Av.		260	17.4		260	17.4

A. Av. velocity (traverse) ft/sec 17.4
B. Av. velocity (ref. pt.) ft/sec n/a
C. Flue factor A/B n/a
D. Pitot Tube correction factor (if any) none
E. Gas density factory (ref. to air) 1.0
F. Corrected velocity B x C x D x E ft/sec 17.4
G. Area of flue, sq. ft. 2.17
H. Av. flue temp. °F 260
I. Flow rate @ stack cond.
F x G x 60, acfm 2275
J. P_s = 29.87
K. Corrected to std. cond.
Flow rate = $\frac{520 \times I \times P_s}{H + 460 \times 29.92}$, scfm 1700

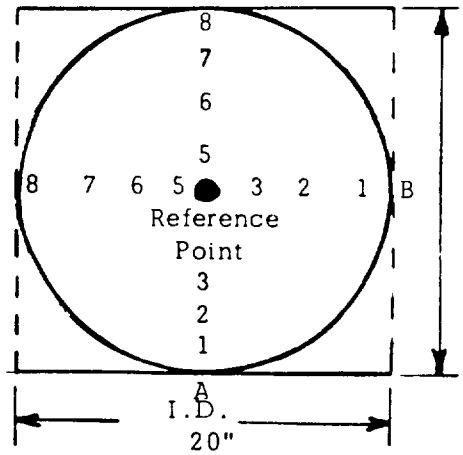

Static (ΔH) "H_2O = 0.05
P_g = - ΔH/13.6 = 0
P_{atm} "Hg = 29.87
$P_s = P_{atm} - P_g$ = 29.87

Data Sheet #5-ECD

Test No.: 4
Plant Code No.: 3-MD
Sampling Location
Line D

Graphic Arts Technical Foundation
Environmental Control Division
Research Department
Pittsburgh, Pennsylvania 15213

Date: Feb. 22, 1972
GATF Personnel:
R. R. Gadomski
A. V. Gimbrone

Gas Velocity Data

Point No.	Time: 4:05-4:15 Vel. Head in. H_2O (h)	Temp °F	Velocity ft/sec	Time: 4:25-4:35 Vel. Head in. H_2O (h)	Temp °F	Velocity ft/sec
1	0.25	130	25.4	0.25	130	25.4
2	0.30	130	38.6	0.30	130	38.6
3	0.30	130	38.6	0.30	130	38.6
4	0.30	130	38.6	0.30	130	38.6
5	0.25	130	25.4	0.30	130	38.6
6	0.25	130	25.4	0.25	130	25.4
Av.		130	31.1		130	34.2

A. Av. velocity (traverse) ft/sec 32.7
B. Av. velocity (ref. pt.) ft/sec n/a
C. Flue factor A/B n/a
D. Pitot Tube correction factor(if any) none
E. Gas density factory(ref. to air) 1.0
F. Corrected velocity B x C x D x E ft/sec 32.7
G. Area of flue, sq. ft. 1.38
H. Av. flue temp. °F 130
I. Flow rate @ stack cond.
F x G x 60, acfm 2710
J. P_s = 29.85
K. Corrected to std. cond.
Flow rate = $\frac{520 \times I \times P_s}{H + 460 \times 29.92}$, scfm 2400

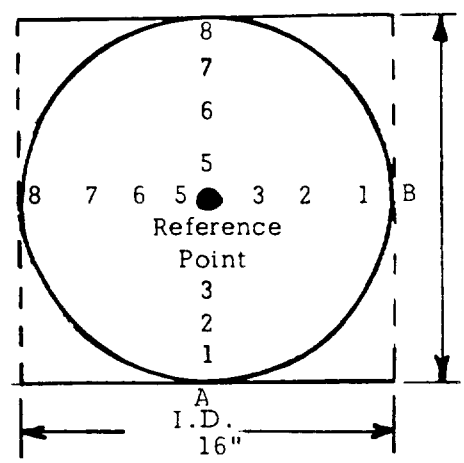

Static (ΔH) "H_2O = 0.35
P_g = - ΔH/13.6 = 0.02
P_{atm} "Hg = 29.87
$P_s = P_{atm} - P_g$ = 29.85

Data Sheet #5-ECD

Test No.: 5
Plant Code No.: 3-MD
Sampling Location
Line E

Graphic Arts Technical Foundation
Environmental Control Division
Research Department
Pittsburgh, Pennsylvania 15213

Date: Feb. 22, 1972
GATF Personnel:
R. R. Gadomski
A. V. Gimbrone

Gas Velocity Data

Point No.	Time: 9:00-9:15			Time: 9:15-9:30		
	Vel. Head in. H_2O (h)	Temp °F	Velocity ft/sec	Vel. Head in. H_2O (h)	Temp °F	Velocity ft/sec
1	.40	160	46.4	.40	160	46.4
2	.45	160	48.2	.45	160	48.2
3	.50	160	50.7	.45	160	48.2
4	.50	160	50.7	.50	160	50.7
5	.45	160	48.2	.45	160	48.2
6	.40	160	46.4	.40	160	46.4
Av.		160	48.4		160	48.0

A. Av. velocity (traverse) ft/sec 48.2
B. Av. velocity (ref. pt.) ft/sec n/a
C. Flue factor A/B n/a
D. Pitot Tube correction factor (if any) none
E. Gas density factory (ref. to air) 1.0
F. Corrected velocity B x C x D x E ft/sec 48.2
G. Area of flue, sq. ft. 1.76
H. Av. flue temp. °F 160
I. Flow rate @ stack cond.
F x G x 60, acfm 5100
J. P_s = 29.83
K. Corrected to std. cond.
Flow rate = $\frac{520 \times I \times P_s}{H + 460 \times 29.92}$, scfm 4200

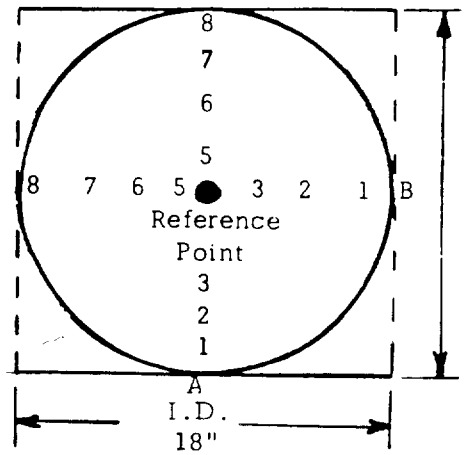

Static (ΔH) "H_2O = 0.55
P_g = $-\Delta H/13.6$ = 0.04
P_{atm} "Hg = 29.87
$P_s = P_{atm} - P_g$ = 29.83

Data Sheet #5-ECD

Test No.: 6
Plant Code No.: 3-MD
Sampling Location
Line F

Graphic Arts Technical Foundation
Environmental Control Division
Research Department
Pittsburgh, Pennsylvania 15213

Date: Feb. 22, 1972
GATF Personnel:
R. R. Gadomski
A. V. Gimbrone

Gas Velocity Data

Point No.	Time: 9:30-9:45			Time: 9:45-10:00		
	Vel. Head in. H_2O (h)	Temp °F	Velocity ft/sec	Vel. Head in. H_2O (h)	Temp °F	Velocity ft/sec
1	0.30	160	40.0	0.40	160	46.4
2	0.35	160	42.0	0.40	160	46.4
3	0.40	160	46.4	0.40	160	46.4
4	0.40	160	46.4	0.45	160	48.2
5	0.40	160	46.4	0.40	160	46.4
6	0.35	160	42.0	0.40	160	46.4
Av.		160	43.9		160	45.1

A. Av. velocity (traverse) ft/sec 44.5
B. Av. velocity (ref. pt.) ft/sec n/a
C. Flue factor A/B n/a
D. Pitot Tube correction factor (if any) none
E. Gas density factory (ref. to air) 1.0
F. Corrected velocity B x C x D x E ft/sec 44.5
G. Area of flue, sq. ft. 1.76
H. Av. flue temp. °F 160
I. Flow rate @ stack cond.
F x G x 60, acfm 4700
J. P_s = 29.85
K. Corrected to std. cond.
Flow rate = $\frac{520 \times I \times P_s}{H + 460 \times 29.92}$, scfm 3950

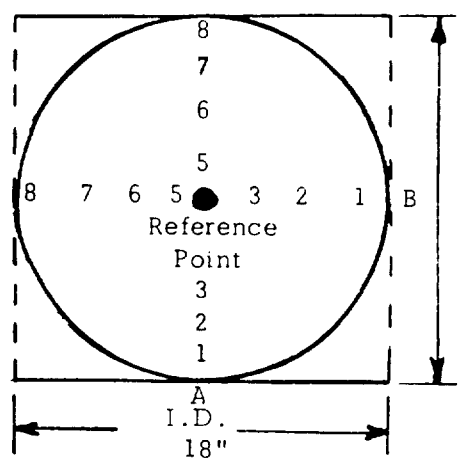

Static (ΔH) "H_2O = 0.25
P_g = $-\Delta H/13.6$ = 0.02
P_{atm} "Hg = 29.87
$P_s = P_{atm} - P_g$ = 29.85

Data Sheet #5-ECD

Test No.: 7
Plant Code No.: 3-MD
Sampling Location
Line G

Graphic Arts Technical Foundation
Environmental Control Division
Research Department
Pittsburgh, Pennsylvania 15213

Date: Feb. 22, 1972
GATF Personnel:
R. R. Gadomski
A. V. Gimbrone

Gas Velocity Data

Point No.	Time: 5:30-5:40 Vel. Head in. H_2O (h)	Temp °F	Velocity ft/sec	Time: 5:45-6:00 Vel. Head in. H_2O (h)	Temp °F	Velocity ft/sec
1	.06	150	17.8	.06	150	17.8
2	.06	150	17.8	.07	150	18.9
3	.07	150	18.9	.07	150	18.9
4	.07	150	18.9	.07	150	18.9
5	.07	150	18.9	.07	150	18.9
6	.06	150	17.8	.06	150	17.8
Av.		150	18.4		150	18.6

A. Av. velocity (traverse) ft/sec 18.5
B. Av. velocity (ref. pt.) ft/sec n/a
C. Flue factor A/B n/a
D. Pitot Tube correction factor (if any) none
E. Gas density factory (ref. to air) 1.0
F. Corrected velocity B x C x D x E ft/sec 18.5
G. Area of flue, sq. ft. 3.14
H. Av. flue temp. °F 150
I. Flow rate @ stack cond.
F x G x 60, acfm 3485
J. P_s = 29.87
K. Corrected to std. cond.
Flow rate = $\frac{520 \times I \times P_s}{H + 460 \times 29.92}$, scfm 3000

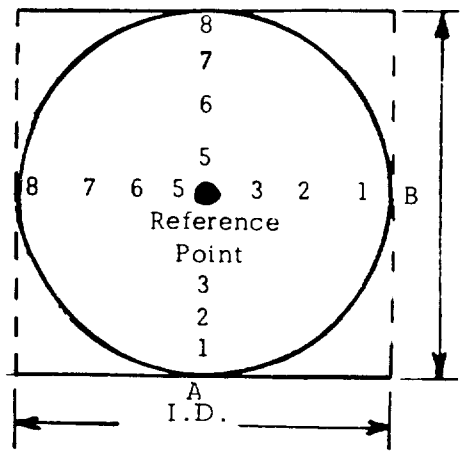

Static (ΔH) "H_2O = 0.03
P_g = $-\Delta H/13.6$ = 0
P_{atm} "Hg = 29.87
$P_s = P_{atm} - P_g$ = 29.87

Approved

CARNEGIE-MELLON UNIVERSITY

MELLON INSTITUTE

RESEARCH SERVICES

Physical Measurements Laboratory (7615-2)

Fellow: Mr. Ray Gadomski (2)

Account No.: Graphic Arts Technical Foundation P.O. #3104

Investigation: Air Pollution Program

Investigation No.: PML 72-206(3 MD)

Date of Report: March 30, 1972

NATURE OF REPORT: Preliminary ____ Progress ____ Final x

The twenty-two samples of stack gas effluent which you submitted have been analyzed by the procedure described in a recent report dated December 17, 1971. The data are tabulated in the attached table.

Paul R. Eisaman
Fellow
Physical Measurements Laboratory

PRE:jdf

Form 111

Table I

Stack Gas Samples

Code 3-M.D.

Cylinder No.	1	2	3	4	5	6	7	8	9	10	11
Sample Volume, cc NTP	286	301	296	300	286	311	293	305	299	295	307
Content, v/v% as CO_2											
Carbon Monoxide	trace	trace	trace	0.0024	0.0026	0.0037	0.0014	trace	trace	trace	0.0008
Carbon Dioxide	0.3919	0.4493	0.3706	0.5669	0.5306	0.4960	1.1522	1.1238	1.0085	1.0299	1.0010
Methane	0.0124	0.0135	0.0076	0.0116	0.0798	0.0687	0.0425	0.0393	0.0314	0.0284	0.0229
Organics	0.0011	0.0012	0.0011	0.0018	0.0056	0.0050	0.0039	0.0040	0.0020	0.0018	0.0032
Traps, Low Boilers	0.5683	0.6489	0.7144	1.3435	0.0045	0.0027	0.1616	0.1559	0.0034	0.0027	0.1775
Traps, High Boilers	0.0358	0.0284	0.0253	0.0320	0.0032	0.0010	0.0485	0.0483	0.0010	0.0032	0.0378

Cylinder No.	12	13	14	15	16	17	18	19	20	21	22
Sample Volume, cc NTP	302	298	300	296	305	304	302	290	298	301	301
Content, v/v% as CO_2											
Carbon Monoxide	0.0005	trace	0.0014	0.0008	0.0043	0.0027	0.0023	0.0017	0.0018	0.0023	0.0013
Carbon Dioxide	1.0384	0.9041	0.9375	0.3825	0.3755	0.6959	0.7032	0.9411	0.9387	0.4648	0.4468
Methane	0.0217	0.0011	0.0011	0.0009	0.0009	0.0459	0.0479	0.0540	0.0547	0.0408	0.0390
Organics	0.0032	0.0023	0.0022	0.0015	0.0017	0.0041	0.0039	0.0042	0.0043	0.0031	0.0029
Traps, Low Boilers	0.1074	0.1203	0.0903	1.9468	2.1416	0.5341	0.5202	2.0107	2.1160	0.8169	0.9035
Traps, High Boilers	0.0336	0.0543	0.0599	0.0562	0.0251	0.0191	0.0206	0.0214	0.0202	0.0095	0.0073

Data Sheet #1-ECD

Graphic Arts Technical Foundation
Environmental Control Division
Research Department
Pittsburgh, Pennsylvania 15213

I. *Source Location Data

1. Firm Name: _____ Phone _____
2. Address: _____
3. Representative(s) Contacted: _____
4. Plant Code No.: 4-MD

II. Source and Sample Background Data

5. Date(s) of Test(s): March 14, 15, 1972
6. Process(es) and Basic Equipment (incl. throughput rates): Company operates three coating lines and three press lines. Press lines have trailing coaters. All lines are controlled utilizing thermal type incineration.
7. Product(s): Closures, Cans, Tubes, etc.
8. Amounts Consumed (Monthly Av.)
   A. Paper or other substrates: not applicable
   B. Inks and Solvents: not applicable
9. Dryer or Oven Equipment:
   A. Type, manufacturer, model: Wagner, direct flame, circulating
   B. Air Flows (rated), Temp.: See Data Sheet No. 5-ECD
   C. Fuel or Heat Consumption: 5,000,000 Btu/hr
   D. Comment: No separate metering of gas. Temperature of oven zones continuously monitored and regulated.
10. Stack Geometry:
   A. No. (Single, manifolded) Single Stack Per Line
   B. Cross-sectional area: Coating Line #1-3.14; #2-3.14 sq ft
   C. Height above roof: 10 - 20 ft depending on particular line
   D. Approx. running length: 20 ft from top of oven to roof level
   E. Comment: None
11. APC Equipment (if any) All lines controlled by thermal incineration. One thermal afterburner for each process line
12. General Comments: Sampling points were ideally located within recommended practice.

*Restricted use only.

Data Sheet #2-ECD

Test No. 1
Plant Code No. 4-M.D.

Graphic Arts Technical Foundation
Environmental Control Division
Research Department
Pittsburgh, Pennsylvania 15213

Physical and Operational Plant Data

Test Date: 3/14/72
Conditions Vinyl Phenolic Lacquer Coating. Coating Line #1

		Reading/Comments	
Atmospheric pressure	(at plant site)	30.25	Heavy precipitation prevailed throughout sampling program. Winds north and north westerly (variable)
Temperature	(in-plant)	72°F	
Relative humidity	(in-plant)	50%	
Wind speed	(ambient)	10-25 mph	
Ambient temperature		35°F	
db/wb ambient		-	
db/wb stack		-	
Flue gas - a) sampling point		a)250°F	
b) stack exit		b)individually recorded	
APC - Inlet		-	
APC - Outlet		800-1400°F depending on test conditions	
Web		Not applicable	
Chill Exhaust		Not applicable	
Oven/Dryer (specify) - bake temperature		375°F	
Static press stack "H_2O (ΔH)		0.50	
Atmospheric "Hg		30.25	
Press drop APC fan		Not applicable	
Press operating speed		70 sheets/min	
Web width/sheet dimensions		33-13/16" x 34-1/4"	
No. printing units/No. plate cylinders		One	
No. colors per side/coat thickness		9.0 mg/4 sq in (78.3% solvent)	
Type of paper/sheet		Steel (metalic)	
Grade		Not applicable	
Wt. of paper/wt. of coating		9.0 mg/4 sq in (7.65 #/gal)	

Lacquer and Thinner consumption:	Estimated usage rate 233 sheets/gal
Control equipment:	Model 480-AH-O (Combustion Heat & Power, Inc.) utilizing and Eclipse burner, rated at 5000 scfm.
Gas consumption:	8000-9000 cu ft/hr: 9,000,000 Btu/hr
Age of unit:	2-years
*Capital cost of equipment:	$10,000
*Installation cost of equipment:	$8000
**Operational cost of equipment:	$850 per month [based on 16-hr (2-shifts) 5-day operation]. Gas rate est. at 90¢ per therm.

*Above figures obtained from plant management personnel and represents best estimate available.

**Operational cost does not reflect maintenance performed on unit.

Data Sheet #2-M.D.

Test No. 2
Plant Code No. 4-M.D.

Graphic Arts Technical Foundation
Environmental Control Division
Research Department
Pittsburgh, Pennsylvania 15213

Test Date: 3/13/72
Conditions White vinyl coating, Coating Line #2

Physical and Operational Plant Data

		Reading/Comments
Atmospheric pressure	(at plant site)	30.15
Temperature	(in-plant)	70
Relative humidity	(in-plant)	65%
Wind speed	(ambient)	5-15 mph (variable)
Ambient temperature		38°F
db/wb ambient		-
db/wb stack		-
Flue gas - a) sampling point		a) 250°F
b) stack exit		b) individually recorded
APC - Inlet		-
APC - Outlet		800-1650°F depending on test conditions
Web		not applicable
Chill Exhaust		not applicable
Oven/Dryer (specify) - bake temperature		350°F
Static press stack "H_2O (ΔH)		0.65
Atmospheric "Hg		30.15
Press drop APC fan		not applicable
Press operating speed		65 sheets/minute
Web width/sheet dimensions		33-1/8" x 34-3/8"
No. printing units/No. plate cylinders		one
No. colors per side/coat thickness		45 mg/4 sq in (52.7% solvent)
Type of paper/sheet		Steel
Grade		Finished
Wt. of paper/wt. of coating		45 mg/4 sq in (10.0 #/gal)

Coating Consumption:	Estimated usage rate 125 sheets/gal.
Control equipment:	Model 480 (Combustion Heat & Power, Inc.) utilizing an Eclipse burner, rated 5000 scfm
Gas consumption:	7000-8000 cu ft/hr or 9,000,000 Btu/hr
Age of unit:	1-year
*Capital cost of equipment:	$15,000
*Installation cost of equipment:	$7000
**Operational cost of equipment:	$850 per month [based on 16-hr (2-shifts) 5-day operation]. Gas rate est. at 90¢ per therm.

*Above figures obtained from plant management personnel and represents best estimate available.

**Operational cost does not reflect maintenance performed on unit.

Data Sheet #3-ECD

Graphic Arts Technical Foundation
Environmental Control Division
Research Department
Pittsburgh, Pennsylvania 15213

Plant Code No. 4-M.D.
Coating Line #1

Date: 3/14/72

Effluent Sampling Data

Sample #	Time	Period	Probe Configuration	Comments
3 4	8:10-8:35 am	15 min	Perpendicular and inserted to center of incinerator chamber	Duplicate samples of incinerator operating at T=1400°F. (Check of incineration temp. at point of sampling was 1410°F.) No odor detectable.
1 2	8:20-8:35	15 min	Perpendicular and inserted to center of duct inlet to incinerator	Duplicate samples of inlet to control equipment of vinyl phenolic lacquer, 9.0 mg/4 sq in (78.3% solvent), press speed of 70 sheets/min, sheet size 33-13/16" x 34-1/4" (1162.7 sq in).
5 6	10:05-10:20	15 min	Same as Samples 3 & 4	Duplicate samples of incinerator operating at T=1200°F (check of incineration temp. at point of sampling was 1210°F). Slight amount of odor detectable.
7 8	11:05-11:20	15 min	Same as Samples 3 & 4	Duplicate samples of incinerator operating at T=1000°F (check of incineration temp. at point of sampling was 950°F). Odor was definitely noticeable at this temperature setting.
9 10	11:20-11:35	15 min	Same as Samples 1 & 2	Duplicate samples of inlet to control equipment (press operational data remained same as Samples 1 & 2).
11 12	11:50-12:05	15 min	Same as Samples 3 & 4	Duplicate samples of incinerator operating at T=900°F (check of incineration temp. at point of sampling was 875°F). Odor was definitely noticeable at this temp. of incineration.

Data Sheet #3-ECD

Graphic Arts Technical Foundation
Environmental Control Division
Research Department
Pittsburgh, Pennsylvania 15213

Plant Code No. 4-M.D.

Date: 3/15/72

Effluent Sampling Data

Sample #	Time	Period	Probe Configuration	Comments
15 16	7:50-8:10	20 min	Perpendicular and inserted to duct inlet to incinerator	Duplicate samples of inlet to control equipment of white vinyl coating, 45 mg/4 sq in (52.7% solvent), press speed of 65 sheets/min, sheet size 33-1/8" x 34-3/8" (1072.8 sq in)
13 14	7:55-8:15	20 min	Perpendicular and inserted in center of incinerator chamber	Duplicate samples of incinerator operating at T=1400°F.
17 18	8:45-9:00	15 min	Same as Samples 13 & 14	Duplicate samples of incinerator operating at T=1200°F.
19 20	9:25-9:45	20 min	Same as Samples 13 & 14	Duplicate samples of incinerator operating at T=1000°F.
*21 *22	9:45-10:00	15 min	Same as Samples 15 & 16	Duplicate samples of inlet to control equipment (press operational data same as for Samples 15 & 16)
	*Sample results may be suspect, press shutdown occurred at unknown time in sampling period.			
23 24	11:00-11:15	15 min	Same as Samples 13 & 14	Duplicate samples of incinerator operating at T=900°F.
31 32	11:05-11:20	20 min	Same as Samples 15 & 16	Duplicate samples of inlet to control equipment (press operational data same as samples 15 & 16). These samples taken in the event sample results from #21 & 22 are invalidated.

DATA SHEET #3-ECD-A
(analytical results in ppm)

Plant Code No.	Date/Time	Process	Cylinder No.	Total Organics (ppm)	CO (ppm)	CH_4 (ppm)	CO_2 (ppm)
4-M.D.	3/14/72 8:20-8:35 am	Inlet to control equipment, vinyl phenolic lacquer 9.0 mg/4 sq in (78.3% solvent) coverage of 0.0059 #/sheet	1 2	3076 2860	10 6	107 7	6388 6652
	3/14/72 11:20-11:35 am	Inlet to control equipment, same operational data as above	9 10	5780 5756	16 11	103 101	7205 7021
	3/14/72 11:50-12:05 pm	Outlet of control equipment, @ T=900°F	11 12	884 898	1015 1063	95 96	26472 26847
	3/14/72 11:05-1:20 pm	Outlet of control equipment, @ T=1000°F	7 8	440 232	630 1169	91 93	26078 26594
	3/14/72 10:05-10:20 am	Outlet of control equipment, @T=1200°F	5 6	57 15	85 17	67 74	32113 31437
	3/14/72 8:10-8:25 am	Outlet of control equipment, @T-1400°F	3 4	5 1	— —	13 14	39082 40104

Data Sheet #3-ECD-A continued

Plant Code No.	Date/Time	Process	Cylinder No.	Total Organics	CO (ppm)	CH_4 (ppm)	CO_2 (ppm)
4-M.D	3/15/72 7:50-8:10 am	Inlet to control equipment, white vinyl coating, 45 mg/4 sq in (52.7% solvent) coverage of 0.0052 #/sheet	15	13574	trace	81	4350
			16	13323	trace	71	4098
	3/15/72 9:45-10:00 am	Inlet to control equipment, same operational data as above	*21	12282	trace	94	3782
			*22	13547	4	84	3912
	3/15/72 11:05-11:20 am	Inlet to control equipment, same operational data	31	15574	5	60	4079
			32	14462	10	57	4012
	3/15/72 11:00-11:15 am	Outlet of control equipment, @ T= 900°F	23	126	1259	38	38190
			24	58	882	27	39846
	3/15/72 9:25-9:45 am	Outlet of control equipment, @T=1000°F	19	5	—	27	37790
			20	7	trace	21	39015
	3/15/72 8:45-9:00 am	Outlet of control equipment, @ T=1200°F	17	77	trace	12	43629
			18	7	—	13	42059
	3/15/72 7:55-8:15 am	Outlet of control equipment @ T=1400°F	**13	4	—	3	754
			**14	15	—	3	17004

*Samples suspect, coater shutdown occurred at unknown time during sampling period.
**Sample results suspect, possible cylinder leakage.

DATA SHEET #3-ECD-B
(calculated emission rates)

Coating Line No.	Cylinder No.	Total Organics (ppm)	Flow Rate (scfm)	* Organic Emissions (lb/hr)
1	1	3076	4500	26.35
	2	2860	4500	24.65
	9	5780	4500	49.30
	10	5756	4500	48.45
	11	884	4500	7.65
	12	898	4500	7.65
	7	440	4500	3.74
	8	232	4500	1.95
	5	57	4500	0.48
	6	15	4500	0.12
	3	5	4500	0.04
	4	1	4500	0.01
2	15	13574	4600	118.06
	16	13323	4600	115.88
	21	**12282	4600	**107.01
	22	**13547	4600	**117.79
	31	15574	4600	135.46
	32	14462	4600	125.80
	23	126	4600	1.04
	24	58	4600	0.50
	19	5	4600	0.04
	20	7	4600	0.06
	17	77	4600	0.67
	18	7	4600	0.06
	13	4	4600	0.03
	14	15	4600	0.13

*calculated on the following basis:

$$lb/carbon/hr = 1.90 \times 10^{-6} \times scfm \times ppm$$

**Sample result suspect due to press operational difficulty

DATA SHEET #3-ECD-C

Calculated Organic Conversion at Various Incineration Temperatures
(expressed as % efficiency)

Plant Code No.	Coating Line No.	Incineration Temperature (ppm)	(1) Inlet Concentration (ppm)	(2) Outlet Concentration (ppm)	(3) % Efficiency (calc.)
4-MD	1	900	4368	898 & 884	79.44 & 79.76
		1000	4368	440 & 232	89.93 & 94.69
		1200	4368	57 & 15	98.70 & 99.66
		1400	4368	5 & 1	99.89 & 99.98
	2	900	13794	126 & 58	99.09 & 99.58
		1000	13794	7 & 5	99.95 & 99.96
		1200	13794	77 & 7	99.43 & 99.95
		1400	13794	15 & 4	99.89 & 99.97

(1) Average value of duplicate sets of samples utilized to establish inlet concentration.
(2) Individual sample result as taken from lab analysis report.
(3) Equation utilized for computing % efficiency as follows:

$$\% \text{ efficiency} = 100 - \frac{\text{outlet } C_{ppm} \times 100}{\text{inlet } C_{ppm}}$$

DATA SHEET #3-ECD-D
Compilation of Operational Data for Usage in Determining Calculated Emission Rates

Plant Code No.	Type of Operation	Sheet Size (sq in)	Coater Speed Sheet/min	Coater Speed Sheet/hr	Film Thickness (mg/sq in)	Solvent/Solids
4-MD	Vinyl Phenolic Lacquer	1162.7	70	3990	2.25	.783/.217
4-MD	White Vinyl	1072.8	65	3705	11.25	.600/.400

*Coater speed calculated as follows: sheets/min x 60 x 0.95 (0.95 is factor determined from operational experience to allow for a time necessary to change skids).

DATA SHEET #3-ECD-E
Comparison of Calculated and Observed Emission Rates

Plant Code No. 4-MD

Type of Operation	Organic Emission[a] obs.	Organic Emission[a] calc.	$E_{obs.}/E_{calc.}$[b]
Vinyl phenolic lacquer	37.19	93.16	0.40
White vinyl	120.00	152.15	0.78

a. Expressed as lb carbon/hr
b. C as in equation (4) data treatment section of this report

Data Sheet #5-ECD

Test No.: 1
Plant Code No.: 4-MD
Sampling Location
Inlet of incinerator
Coating Line #1

Graphic Arts Technical Foundation
Environmental Control Division
Research Department
Pittsburgh, Pennsylvania 15213

Date: March 14, 1972
GATF Personnel:
R. R. Gadomski
A. V. Gimbrone

Gas Velocity Data

Point No.	Time: 8:00-8:05 am			Time: 8:05-8:15 am		
	Vel. Head in.H_2O (h)	Temp °F	Velocity ft/sec	Vel. Head in.H_2O (h)	Temp °F	Velocity ft/sec
A-1	0.10	250	24.6	0.10	250	24.6
A-2	0.15	250	29.9	0.20	250	34.8
A-3	0.15	250	29.9	0.25	250	37.6
A-4	0.20	250	34.8	0.30	250	42.3
A-5	0.25	250	37.6	0.20	250	34.8
A-6	0.20	250	34.8	0.10	250	24.6
Av.		250	31.9		250	32.9

A. Av. velocity (traverse) ft/sec 32.4
B. Av. velocity (ref. pt.) ft/sec N/A
C. Flue factor A/B None
D. Pitot Tube correction factor(if any) 1.0
E. Gas density factory(ref. to air) 1.0
F. Corrected velocity B x C x D x E ft/sec 32.4
G. Area of flue, sq. ft. 3.14
H. Av. flue temp. °F 250
I. Flow rate @ stack cond.
F x G x 60, acfm 6100
J. P_s = 30.21
K. Corrected to std. cond.
Flow rate = $\frac{520 \times I \times P_s}{(H + 460) \times 29.92}$, scfm 4500

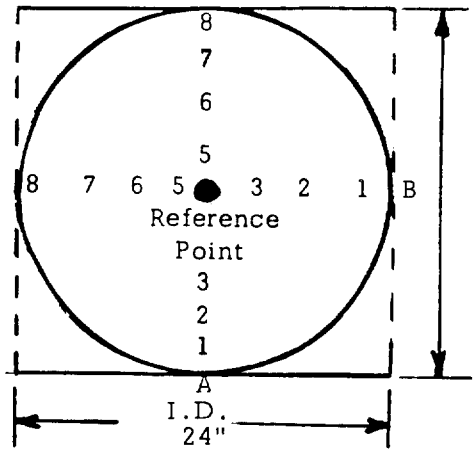

Static (ΔH) "H_2O = 0.50
P_g = $-\Delta H/13.6$ = 0.04
P_{atm} "Hg = 30.25
$P_s = P_{atm} - P_g$ = 30.21

Data Sheet #5-ECD

'est No.: 2
'lant Code No.: 4-MD
.ampling Location
Inlet of Incinerator
Coating Line #2

Graphic Arts Technical Foundation
Environmental Control Division
Research Department
Pittsburgh, Pennsylvania 15213

Date: March 15, 1972
GATF Personnel:
W. J. Green
A. V. Gimbrone

Gas Velocity Data

Point No.	Time: 7:30 - 7:35 am			Time: 7:40 - 7:45 am		
	Vel. Head in. H_2O (h)	Temp °F	Velocity ft/sec	Vel. Head in. H_2O (h)	Temp °F	Velocity ft/sec
A-1	0.10	250	24.6	0.15	250	29.9
A-2	0.10	250	24.6	0.20	250	34.8
A-3	0.15	250	29.9	0.30	250	42.3
A-4	0.20	250	34.8	0.25	250	37.6
A-5	0.25	250	37.6	0.20	250	34.8
A-6	0.25	250	37.6	0.15	250	29.9
Av.		250	31.5		250	34.9

A. Av. velocity (traverse) ft/sec 33.2
B. Av. velocity (ref. pt.) ft/sec N/A
C. Flue factor A/B None
D. Pitot Tube correction factor (if any) 1.0
E. Gas density factory (ref. to air) 1.0
F. Corrected velocity B x C x D x E ft/sec 33.2
G. Area of flue, sq. ft. 3.14
H. Av. flue temp. °F 250
I. Flow rate @ stack cond.
F x G x 60, acfm 6250
J. P_s = 30.10
K. Corrected to std. cond.
Flow rate = $\frac{520 \times I \times P_s}{(H + 460) \times 29.92}$, scfm 4600

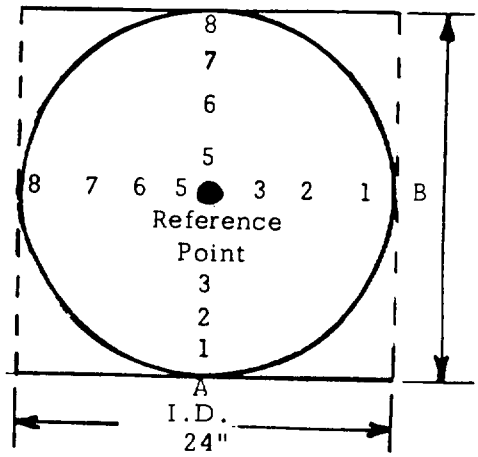

Static (ΔH) "H_2O = 0.65
P_g = - ΔH/13.6 = 0.05
P_{atm} "Hg = 30.15
$P_s = P_{atm} - P_g$ = 30.10

Approved

CARNEGIE-MELLON UNIVERSITY

MELLON INSTITUTE

RESEARCH SERVICES

Physical Measurements Laboratory (7615-2)

Fellow: Mr. Ray Gadomski (2)

Account No.: Graphic Arts Technical Foundation P.O. #3104

Investigation: Air Pollution Program

Investigation No.: PML 72-211 (4-MD)

Date of Report: April 12, 1972

NATURE OF REPORT: Preliminary ____ Progress ____ Final x

The twenty-six samples of stack gas effluent which you submitted have been analyzed by the procedure described in a recent report dated December 17, 1971. The data are tabulated in the attached table.

Paul R. Eisaman
Fellow
Physical Measurements Laboratory

PRE:jdf

Form 111

Table I

Stack Gas Samples

Code 4 - M.D.

Cylinder No.	1	2	9	10	15	16
Sample Volume, cc NTP	279	308	300	302	269	300
Content, v/v % as CO_2						
Carbon Monoxide	0.0010	0.0006	0.0016	0.0011	trace	trace
Carbon Dioxide	0.6388	0.6652	0.7205	0.7021	0.4350	0.4098
Methane	0.0107	0.0007	0.0103	0.0101	0.0081	0.0071
Organics	0.0012	0.0013	0.0018	0.0017	0.0015	0.0010
Traps, Low Boilers	0.2247	0.2063	0.5609	0.5551	1.3278	1.3039
Traps, High Boilers	0.0817	0.0784	0.0153	0.0188	0.0281	0.0274

Cylinder No.	21	22	31	32	3	4
Sample Volume, cc NTP	314	303	292	297	296	295
Content, v/v % as CO_2						
Carbon Monoxide	trace	0.0004	0.0005	0.0010	------	------
Carbon Dioxide	0.3782	0.3912	0.4079	0.4012	3.9082	4.0104
Methane	0.0094	0.0084	0.0060	0.0057	0.0013	0.0014
Organics	0.0011	0.0013	0.0012	0.0013	0.0005	0.0000
Traps, Low Boilers	1.1924	1.3261	1.5270	1.4298	0.0000	0.0000
Traps, High Boilers	0.0347	0.0273	0.0292	0.0151	0.0000	0.0001

Cylinder No.	5	6	7	8	11	12
Sample Volume, cc NTP	283	304	296	293	301	288
Content, v/v % as CO_2						
Carbon Monoxide	0.0085	0.0017	0.0630	0.1169	0.1015	0.1063
Carbon Dioxide	3.2113	3.1437	2.6078	2.6594	2.6472	2.6847
Methane	0.0067	0.0074	0.0091	0.0093	0.0095	0.0096
Organics	0.0047	0.0015	0.0175	0.0167	0.0204	0.0246
Traps, Low Boilers	0.0003	0.0000	0.0248	0.0052	0.0639	0.0057
Traps, High Boilers	0.0007	0.0000	0.0017	0.0013	0.0041	0.0595

Table I (continued)

Cylinder No.	13	14	17	18	19	20
Sample Volume, cc NTP	300	296	286	299	289	286
Content, v/v % as CO_2						
Carbon Monoxide	------	------	trace	------	------	trace
Carbon Dioxide	0.0754	1.7004	4.3629	4.2059	3.7790	3.9015
Methane	0.0003	0.0003	0.0012	0.0013	0.0027	0.0021
Organics	0.0000	0.0000	0.0003	0.0000	0.0000	0.0007
Traps, Low Boilers	0.0000	0.0000	0.0000	0.0000	0.0005	0.0000
Traps, High Boilers	0.0004	0.0015	0.0074	0.0007	0.0000	0.0000

Cylinder No.	23	24
Sample Volume, cc NTP	281	280
Content, v/v % as CO_2		
Carbon Monoxide	0.1259	0.0882
Carbon Dioxide	3.8190	3.9846
Methane	0.0038	0.0027
Organics	0.0069	0.0051
Traps, Low Boilers	0.0040	0.0001
Traps, High Boilers	0.0017	0.0006

Data Sheet #1-ECD

Graphic Arts Technical Foundation
Environmental Control Division
Research Department
Pittsburgh, Pennsylvania 15213

I. *Source Location Data

1. Firm Name: _____ Phone _____
2. Address: _____
3. Representative(s) Contacted: _____
4. Plant Code No.: 5-MD

II. Source and Sample Background Data

5. Date(s) of Test(s): April 18-19, 1972
6. Process(es) and Basic Equipment (incl. throughput rates): Company operates two (2) coating lines and three (3) printing lines. Test conducted on a coating line with an R. Hoe press coupled with a Ross oven.
7. Product(s): Closures
8. Amounts Consumed (Monthly Av.)
   A. Paper or other substrates: Metal
   B. Inks and Solvents: See Data Sheet #2-ECD
9. Dryer or Oven Equipment:
   A. Type, manufacturer, model: J. O. Ross Engineering Corp. (Air Systems)
   B. Air Flows (rated), Temp.: 3-zone oven, zone #1-440°F, zone #2 & 3-360°F
   C. Fuel or Heat Consumption: Est. 5 x 10^6 Btu/hr
   D. Comment: Oven is relatively old and appeared to be in need of considerable maintenance and proper balancing.
10. Stack Geometry:
   A. No. (Single, manifolded) Single
   B. Cross-sectional area: 3.14 sq ft
   C. Height above roof: approximately 30 ft
   D. Approx. running length: 20 ft to roof level
   E. Comment: Stack considerations were excellent for sampling
11. APC Equipment (if any) Oxy-Catalyst, Inc. oxidation unit, Model TL-50-H-400 utilizing a Barber-Coleman solid state indicating temperature controller
12. General Comments: Sampling was conducted within general recommended practice.

*Restricted use only.

Data Sheet #2-ECD

Test No. 1
Plant Code No. 5-MD

Graphic Arts Technical Foundation
Environmental Control Division
Research Department
Pittsburgh, Pennsylvania 15213

Test Date: 4/18/72
Conditions High solids vinyl run

Physical and Operational Plant Data

	Reading/Comments
Atmospheric pressure	29.98
Temperature	65°F
Relative humidity	50%
Wind speed	southerly 2-7 mph
Temperatures (°F)	
Ambient	55-75 (depending on time of day)
db/wb ambient	not applicable
db/wb stack	not applicable
Flue gas - a) sampling point	a) 300°F
b) stack exit	b) 500-1100°F depending on test conditions
APC - Inlet	300°F
APC - Outlet	500-1100°F
Web	not applicable
Chill Exhaust	not applicable
Oven/Dryer (specify) - bake temp.	360°F - bake
Static press stack "H_2O (ΔH)	1.10" H_2O
Atmospheric "Hg	29.98
Press drop APC fan	10-12" H_2O
Press operating speed	60 sheets/min
Web width/sheet dimensions	26-3/4" x 34-1/2" (915.20 sq in)
No. printing units/no. plate cylinders	not applicable
No. colors per side/coat thickness	24.75 mg/sq in
Type of paper/sheet	Tin plate steel
Grade	not applicable
Wt. of paper/wt. of coating	not applicable
Coating usage rate (approx.)	100 sheets/gal coating

Control equipment data

1. Description of unit	Oxy Catalyst, Inc. oxidation Model #TL-50-H-400 (serial #702461001) rated at 5000 scfm (1-bed unit), burner capacity 5 x 10^6 Btu/hr
2. Gas consumption	Average operational usage determined as 1640 cu ft/hr
3. Age of unit	1 year
4. Capital cost of equip.	$17,300
5. Installation cost of equip.	$7700 (includes structural support, elec., gas piping, etc.)
6. Fuel cost	$9300 per year (approx. $750) monthly

Note: Unit has not undergone maintenance, therefore, no maintenance cost available.

Data Sheet #3-MD

Graphic Arts Technical Foundation
Environmental Control Division
Research Department
Pittsburgh, Pennsylvania 15213

Plant Code No. 5-MD

Date: 4/18/72

Effluent Sampling Data

Sample #	Time	Period	Probe Configuration	Comments
1 2	9:40-10:00 am	20 min	Perpendicular and inserted to center of stack diameter	Inlet samples of high solids vinyl 60 sheets/min, 915.20 sq in film thickness of 24.75 mg/sq in (35% solvent) coverage of 0.049 #/sheets
3 4	9:40-10:00	20 min	Same as above	Outlet of catalytic incinerator at operating temperature of T = 900°F.
7 8	10:20-10:40	20 min	Same as above	Outlet of catalytic incinerator at operating temperature of T = 800°F
5 6	11:00-11:20	20 min	Same as above	Inlet samples of high solids vinyl (same operational data as samples #1 & #2)
9 10	11:00-11:20	20 min	Same as above	Outlet of catalytic incinerator at operating temperature of T = 700°F
11 12	12:00-12:20	20 min	Same as above	Outlet of catalytic incinerator at operating temperature of T = 600°F

Data Sheet #3-ECD

Graphic Arts Technical Foundation
Environmental Control Division
Research Department
Pittsburgh, Pennsylvania 15213

Plant Code No. 5-MD

Date: 4/19/72

Effluent Sampling Data

Sample #	Time	Period	Probe Configuration	Comments
13 14	10:20-10:40 am	20 min	Perpendicular and inserted to center of stack diameter	Outlet of catalytic incinerator at operating temperature of T = 1000°F
15 16	11:10-11:30	20 min	Same as above	Outlet of catalytic incinerator at operating temperature of T = 950°F
17 18	11:45-12:05	20 min	Same as above	Outlet of catalytic incinerator at operating temperature of T = 850°F

DATA SHEET #3-ECD-A
(analytical results in ppm)

Plant Code No.	Date/Time	Process	Cylinder No.	Total Organics (ppm)	CO (ppm)	CH_4 (ppm)	CO_2 (ppm)
5-MD	4/18/72 9:40-10:00 am	Inlet to control equipment, high solids vinyl, 24.75 mg/sq in (35% solvent) coverage of 0.049 #/sheet	1	2669	—	15	328
			2	801	—	14	326
	4/18/72 11:00-11:20 am	Inlet to control equipment, same operational data as above	5	920	—	12	336
			6	3436	—	11	321
	4/18/72 12:00-12:20 pm	Outlet of control equipment, at T = 600°F	11	179	124	15	10419
			12	924	97	15	9714
	4/18/72 11:00-11:20 am	Outlet of control equipment, at T = 700°F	9	175	240	16	13364
			10	81	285	17	13823
	4/18/72 10:20-10:40 am	Outlet of control equipment, at T = 800°F	7	151	295	19	14496
			8	205	258	20	15729
	4/19/62 11:45-12:05 pm	Outlet of control equipment, at T = 850°F	17	230	258	22	16418
			18	171	250	20	17363
	4/18/72 9:40-10:00 am	Outlet of control equipment, at T = 900°F	3	112	351	24	15906
			4	147	237	23	15374
	4/19/72 11:20-11:30	Outlet of control equipment, at T = 950°F	15	32	—	26	17023
			16	174	176	34	16892
	4/19/72 10:20-10:40 am	Outlet of control equipment, at T = 1000°F	13	149	216	30	16444
			14	156	156	33	17600

DATA SHEET #3-ECD-B
(calculated emission rates)

Coating Line No.	Cylinder No.	Total Organics (ppm)	Flow Rate (scfm)	* Organic Emissions (lb/hr)
5-MD	1	2669	4000	20.52
	2	801	"	6.08
	5	920	"	6.99
	6	3436	"	25.84
	11	179	"	1.37
	12	924	"	6.99
	9	175	"	1.34
	10	81	"	0.61
	7	151	"	1.14
	8	205	"	1.56
	17	230	"	1.75
	18	171	"	1.30
	3	112	"	0.85
	4	147	"	1.11
	15	32	"	0.24
	16	174	"	1.32
	13	149	"	1.13
	14	156	"	1.18

*calculated on the following basis:

$$\text{lb carbon/hr} = 1.90 \times 10^{-6} \times \text{scfm} \times \text{ppm}$$

DATA SHEET-#3-ECD-C

Calculated Organic Conversion at Various Incineration Temperatures

Plant Code No.	Incineration Temperature (°F)	(1) Inlet Concentration (ppm)	(2) Outlet Concentration (ppm)	(3) % Efficiency (calc.)
5-MD	600	1957	924 & 179	52.79 & 90.86
	700	1957	175 & 81	91.06 & 95.86
	800	1957	205 & 151	89.53 & 92.29
	850	1957	230 & 171	88.25 & 91.26
	900	1957	147 & 112	92.45 & 94.28
	950	1957	174 & 32	91.12 & 98.37
	1000	1957	156 & 149	92.03 & 92.39

(1) Average value of duplicate set of samples utilized to establish inlet concentration

(2) Individual sample result as taken from lab analysis report

(3) Equation utilized for computing % efficiency as follows:

$$\% \text{ efficiency} = 100 - \frac{\text{outlet } C_{ppm} \times 100}{\text{inlet } C_{ppm}}$$

DATA SHEET #3-ECD-D
Compilation of Operational Data for Usage in Determining
Calculated Emission Rates

Plant Code No.	Type of Operation	Sheet Size (sq in)	*Coater Speed Sheet/min	*Coater Speed Sheet/hr	Film Thickness (mg/sq in)	Solvent/Solids
5-MD	High solids vinyl	915.2	60	3420	24.75	.35/.65

*Coater speed calculated as follows: sheets/min x 60 x 0.95
(0.95 is factor determined from operational experience to
allow for a time necessary to change skids)

DATA SHEET #3-ECD-E
Comparison of Calculated and Observed Emission Rates

Plant Code No. 5-MD

Type of Operation	Organic Emission[a] obs.	Organic Emission[a] calc.	$E_{obs.}/E_{calc.}$[b]
High solids vinyl	14.83	88.75	0.17

a. Expressed as lb carbon/hr
b. C as in Equation (4) data treatment of
this report

Data Sheet #5-FCD

Test No.: 1
Plant Code No.: 5-MD
Sampling Location
Inlet to afterburner

Graphic Arts Technical Foundation
Environmental Control Division
Research Department
Pittsburgh, Pennsylvania 15213

Date: 4/18/72
GATF Personnel:
R. R. Gadomski
A. V. Gimbrone

Gas Velocity Data

Point No.	Time: 8:00 - 8:10 am			Point No.	Time: 8:20 - 8:30 am		
	Vel. Head in. H_2O (h)	Temp °F	Velocity ft/sec		Vel. Head in. H_2O (h)	Temp °F	Velocity ft/sec
A-1	0.15	300	30.4	B-1	0.15	300	30.4
A-2	0.16	300	31.3	B-2	0.15	300	30.4
A-3	0.18	300	34.0	B-3	0.16	300	31.3
A-4	0.18	300	34.0	B-4	0.16	300	31.3
A-5	0.17	300	33.1	B-5	0.15	300	30.4
A-6	0.16	300	31.3	B-6	0.15	300	30.4
Av.		300	32.4	Av.		300	30.7

A. Av. velocity (traverse) ft/sec 31.5
B. Av. velocity (ref. pt.) ft/sec N/A
C. Flue factor A/B 1.0
D. Pitot Tube correction factor(if any) None
E. Gas density factory(ref. to air) 1.0
F. Corrected velocity B x C x D x E ft/sec 31.5
G. Area of flue, sq. ft. 3.14
H. Av. flue temp. °F 300
I. Flow rate @ stack cond.
F x G x 60, acfm 5745
J. P_s = 29.90
K. Corrected to std. cond.
Flow rate = $\frac{520 \times I \times P_s}{(H + 460) \times 29.92}$ scfm 4000

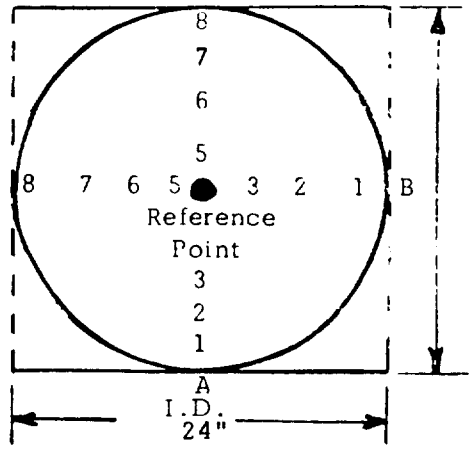

Static (ΔH) "H_2O = 1.1
P_g = $\Delta H/13.6$ = 0.08
P_{atm} "H_g = 29.98
$P_s = P_{atm} - P_g$ = 29.90

Approved PMR

CARNEGIE-MELLON UNIVERSITY

MELLON INSTITUTE

RESEARCH SERVICES

MAY 30 1972

GATE

Physical Measurements Laboratory (7615-2)

Fellow Mr. Ray Gadomski (2)

Account No. Graphic Arts Technical Foundation P.O. #3104

Investigation Air Pollution Program

Investigation No. PML 72-213 (5-MD)

Date of Report May 25, 1972

NATURE OF REPORT: Preliminary ____ Progress ____ Final x

The eighteen samples of stack gas effluent which you submitted have been analyzed by the procedure described in a recent report dated December 17, 1971. The data are tabulated in the attached table.

Paul R. Eisaman
Fellow
Physical Measurements Laboratory

PRE:jdf

Form 111

Table I

Stack Gas Samples

Code 5-M.D.

Cylinder No.	1	2	3	4	5	6	7	8	9
Sample Volume, cc NTP	257	291	272	266	271	260	270	268	280
Content, v/v % as CO_2									
Carbon Monoxide	------	------	0.0351	0.0237	------	------	0.0295	0.0258	0.0240
Carbon Dioxide	0.0328	0.0326	1.5906	1.5374	0.0336	0.0321	1.4496	1.5729	1.3364
Methane	0.0015	0.0014	0.0024	0.0023	0.0012	0.0011	0.0019	0.0020	0.0016
Organics	0.0001	0.0001	0.0107	0.0127	0.0001	0.0001	0.0136	0.0187	0.0092
Traps, Low Boilers	0.2321	0.0355	0.0000	0.0004	0.0564	0.3086	0.0002	0.0012	0.0000
Traps, High Boilers	0.0347	0.0445	0.0005	0.0016	0.0355	0.0349	0.0013	0.0006	0.0083

Cylinder No.	10	11	12	13	14	15	16	17	18
Sample Volume, cc NTP	278	274	269	276	265	255	273	261	268
Content, v/v % as CO_2									
Carbon Monoxide	0.0285	0.0124	0.0097	0.0216	0.0156	------	0.0176	0.0258	0.0250
Carbon Dioxide	1.3823	1.0419	0.9714	1.6444	1.7600	1.7023	1.6892	1.6418	1.7363
Methane	0.0017	0.0015	0.0015	0.0030	0.0033	0.0026	0.0034	0.0022	0.0020
Organics	0.0078	0.0131	0.0083	0.0098	0.0080	0.0031	0.0073	0.0172	0.0171
Traps, Low Boilers	0.0000	0.0026	0.0746	0.0036	0.0013	0.0001	0.0023	0.0052	0.0000
Traps, High Boilers	0.0003	0.0022	0.0095	0.0015	0.0063	0.0000	0.0078	0.0006	0.0000

Data Sheet #1-ECD

Graphic Arts Technical Foundation
Environmental Control Division
Research Department
Pittsburgh, Pennsylvania 15213

I. *Source Location Data

1. Firm Name: _____ Phone _____
2. Address: _____
3. Representative(s) Contacted: _____
4. Plant Code No.: 6-MD (BC)

II. Source and Sample Background Data

5. Date(s) of Test(s): June 6, 1972
6. Process(es) and Basic Equipment (incl. throughput rates): Coating line; Young Bros. Oven (FECO) Model #6914; controlled by a UOP (7-1/2 yrs old) -D-3 (Model #NRC-10-D3) catalytic combustion incinerator redesigned and outfited with E.I.DuPont Cat. beds.
7. Product(s): Decorated sheet metal
8. Amounts Consumed (Monthly Av.)
   A. Paper or other substrates: Not applicable
   B. Inks and Solvents: Not applicable
9. Dryer or Oven Equipment:
   A. Type, manufacturer, model: Young Bros. Oven (FECO) Model #6914
   B. Air Flows (rated), Temp.: Not available
   C. Fuel or Heat Consumption: Est. as 5 x 10^6 Btu/hr
   D. Comment: Oven of older design
10. Stack Geometry:
   A. No. (Single, manifolded) Single
   B. Cross-sectional area: 7.06 sq ft (36" duct)
   C. Height above roof: 12 ft.
   D. Approx. running length: 18 ft.
   E. Comment: Control equipment located immediately on top of oven with good exhaust stack system.
11. APC Equipment (if any) UOP Model #NRC-10-D3 with new E.I. duPont catalytic bed and redesigned interior.
12. General Comments: Relative short length of inlet to control equipment provided for difficult sampling.

*Restricted use only.

Test No. 1
Plant Code 6-MD (BC)

Graphic Arts Technical Foundation
Environmental Control Division
Research Department
Pittsburgh, Pennsylvania 15213

Data Sheet #2-ECD
Test Date: 6/6/72
Conditions: excellent for sampling

Physical and Operational Plant Data

	Reading/Comments
Ambient temperature	70 to 75°F
db/wb ambient	Not applicable
db/wb stack	Not applicable
Flue gas - a) sampling point temp.	a) 305°F
b) stack exit temp.	b) Not applicable
APC - Inlet temp.	305°F
APC - Outlet temp.	700°F & 800°F dependent on test requirements
Web temp.	Not applicable
Chill exhaust temp.	Not applicable
Oven/Dryer (specify) - bake temp.	300°F (bake)
Static press stack "H_2O (ΔH)	0.5
Atmospheric "Hg	29.92
Press operating speed	85 sheets/min
Web width/sheet dimensions	34-1/2" x 41-7/8 (144.5 sq in)
No. printing units/No. plate cylinders	One
No. colors per side/coating thickness	49 mg/4 sq in
Est. coating/ink usage rate	250 sheets/gallon
Type of paper/sheet	Metal sheet (90# basic wt.)
Wt. of paper/wt. of coating	10.82 lbs/gal (30% solvent)

Control Equipment Data

1. Description of unit:	UOP catalytic incinerator, Model NRC-10-D3 with new E.I. duPont catalytic bed, rated at 9000 scfm. Maximum designed temp. catalytic (900°F), 1-bed unit.
2. Age of unit:	Approximately 1 year for catalyst bed, unit,however, is over 2 years old.
3. Gas consumption	1600 cu ft/hr for 900°F operation.
4. Capital equipment cost:	$28,000
5. Installation cost:	$4,000 (includes gas piping, necessary ductwork, structural support and labor).
6. Operational cost:	$700 per month (based on 5-day, 2-shift work week).
7. Maintenance cost:	Not available.
8. Miscellaneous Data:	Efficiency studies have been conducted and ranged from 97-99%.

Data Sheet #3-ECD

Graphic Arts Technical Foundation
Environmental Control Division
Research Department
Pittsburgh, Pennsylvania 15213

Plant Code No. 6-MD (BC)

Date: 6/6/72

Effluent Sampling Data

Sample #	Time	Period	Probe Configuration	Comments
1, 2	1:30-1:50 pm	20 min.	Perpendicular and inserted to center of stack dia.	Inlet samples of acrylic white coating, 85 sheets/min (1445.5 sq in), film thickness of 12.25 mg/sq in, (30% solvent content) coverage of 0.039 #/sheet.
3, 4	3:30-3:50 pm	20 min.	Same as above	Inlet samples of process as stated above.
5, 6	1:30-1:50 pm	20 min.	Same as above	Outlet samples of catalytic incinerator at operating temperature of T = 700°F.
8, 9	3:30-3:50 pm	20 min.	Same as above	Outlet samples of catalytic incinerator at operating temperature of T = 800°F.

DATA SHEET #3-ECD-A
(Analytical Results in ppm)

Plant Code No.	Date/Time	Process	Cylinder No.	Total Organics (ppm)	CO (ppm)	CH_4 (ppm)	CO_2 (ppm)
6-MD(BC)	6/6/72 1:30-1:50 pm	Inlet to control equipment, acrylic white, 12.25 mg/sq in (30% solvent) coverage of 0.039 #/sheet	1	16534	trace	72	7160
			2	8326	trace	50	6188
	6/6/72 3:30-3:50 pm	Same as above	3	5164	38	11	8984
			4	10347	trace	33	8507
	6/6/72 11:30-1:50 pm	Outlet of control equipment at T = 700°F	5	30	42	41	17569
			6	44	56	45	16876
	6/6/72 3:30-3:50 pm	Outlet of control equipment at T = 800°F	8	43	140	33	28314
			9	180	164	31	27619

DATA SHEET #3-ECD-B
(Calculated Emission Rates)

Plant Code No.	Cylinder No.	Total Organics (ppm)	Flow Rate (scfm)	* Organic Emissions (lb/hr)
6-MD (BC)	1	16534	7400	222.41
	2	8326	"	116.98
	3	5164	"	72.55
	4	10347	"	145.38
	5	30	"	0.42
	6	44	"	0.62
	8	43	"	0.62
	9	180	"	2.53

*Calculated on the following basis:

$$\text{lb/carbon/hr} = 1.90 \times 10^{-6} \times \text{scfm} \times \text{ppm}$$

DATA SHEET #3-ECD-C
Calculated Organic Conversion at Various Incineration Temperatures

Plant Code No.	Incineration Temperature (°F)	Inlet(1) Concentration (ppm)	Outlet(2) Concentration (ppm)	% Efficiency(3) (calc)
6-MD (BC)	700	10093	30 & 44	97.70 & 99.56
	800	10093	43 & 180	99.56 & 98.22

(1) Average value of duplicate set of samples utilized to establish inlet concentration.
(2) Individual sample result as taken from lab analysis report
(3) Equation utilized for computing % efficiency as follows:

$$\% \text{ efficiency} = 100 - \frac{\text{outlet C ppm}}{\text{inlet C ppm}} \times 100$$

DATA SHEET #3-ECD-D
Compilation of Operational Data for Usage in Determining Calculated Emission Rates

Plant Code No.	Type of Operation	Sheet Size	*Coater Speed Sh/min	*Coater Speed Sh/hr	Film Thickness (mg/sq in)	Solvent/Solids
6-MD (BC)	Acrylic white	1445.5	85	4845	12.25	30/70

*Coater speed calculated as follows:

sheets/min x 60 x 0.95 (0.95 is factor determined from operational experience to allow for time necessary to change skids)

DATA SHEET #3-ECD-E
Comparison of Calculated and Observed Emission Rates

Plant Code No. 6-MD (BC)

Type of Operation	Organic Emission[a]		E_{obs}/E_{calc}[b]
	obs.	calc.	
Acrylic white	139.44	271.25	0.47

a. Expressed as lb carbon/hr
b. C as in equation (4) data treatment of this report

Data Sheet #5-FCD

Test No.: 1
Plant Code No.: 6-MD (BC)
Sampling Location
Outlet of control equipment

Graphic Arts Technical Foundation
Environmental Control Division
Research Department
Pittsburgh, Pennsylvania 15213

Date: 6/6/72
GATF Personnel:
R. R. Gadomski
A. V. Gimbrone

Gas Velocity Data

Point No.	Time: 12:45-1:00 pm			Point No.	Time: 2:00-2:15 pm		
	Vel. Head in. H_2O (h)	Temp °F	Velocity ft/sec		Vel. Head in. H_2O (h)	Temp °F	Velocity ft/sec
A-1	0.10	305	24.6	B-1	0.10	305	24.6
A-2	0.10	305	24.6	B-2	0.12	305	26.3
A-3	0.15	305	30.1	B-3	0.12	305	26.3
A-4	0.15	305	30.1	B-4	0.10	305	24.6
A-5	0.10	305	24.6	B-5	0.10	305	24.6
A-6	0.10	305	24.6	B-6	0.10	305	24.6
Av.		305	26.4	Av.		305	25.2

A. Av. velocity (raverse) ft/sec 25.8
B. Av. velocity (ref. pt.) ft/sec N/A
C. Flue factor A/B None
D. Pitot Tube correction factor(if any) 1.0
E. Gas density factory(ref. to air) 1.0
F. Corrected velocity B x C x D x E ft/sec 25.8
G. Area of flue, sq. ft. 7.06
H. Av. flue temp. °F 305
I. Flow rate @ stack cond.
F x G x 60, acfm 10,925
J. P_s = 29.92
K. Corrected to std. cond.
Flow rate = $\frac{520 \times I \times P_s}{(H + 460) \times 29.92}$ scfm 7400

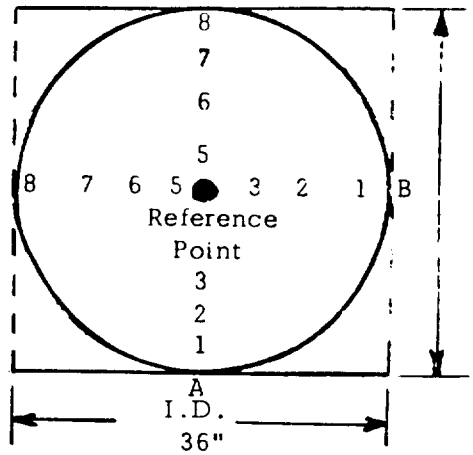

Static (ΔH) "H_2O = 0.50
P_g = ΔH/13.6 = 0.00
P_{atm} "Hg = 29.92
$P_s = P_{atm} - P_g$ = 29.92

Approved BMR

CARNEGIE-MELLON UNIVERSITY

MELLON INSTITUTE

RESEARCH SERVICES

Physical Measurements Laboratory (7615-2)

Fellow Mr. Ray Gadomski (2)

Account No. Graphic Arts Technical Foundation P.O. #3104

Investigation Air Pollution Program

Investigation No. PML 72-219 (6-MD) (BC)

Date of Report July 14, 1972

NATURE OF REPORT: Preliminary ____ Progress ____ Final x

The eight samples of stack gas effluent which you submitted have been analyzed by the procedure described in a recent report dated December 17, 1971. The data are tabulated in the attached table.

Paul R. Eisaman

Paul R. Eisaman
Fellow
Physical Measurements Laboratory

PRE:jdf

Form 111

Table I

Stack Gas Samples

Code 6-M.D.-BC

Cylinder No.	1	2	3	4	5	6	8	9
Sample Volume, cc NTP	264	286	273	276	269	285	273	279
Content, v/v % as CO_2								
Carbon Monoxide	trace	trace	0.0038	trace	0.0042	0.0056	0.0140	0.0164
Carbon Dioxide	0.7160	0.6188	0.8984	0.8507	1.7569	1.6876	2.8314	2.7619
Methane	0.0072	0.0050	0.0011	0.0033	0.0041	0.0045	0.0033	0.0031
Organics	0.0016	0.0013	0.0019	0.0013	0.0030	0.0035	0.0035	0.0055
Traps, Low Boilers	0.2588	0.8055	0.4922	1.0120	0.0000	0.0009	0.0008	0.0117
Traps, High Boilers	1.3930	0.0258	0.0223	0.0214	0.0000	0.0000	0.0000	0.0008

Data Sheet #1-ECD

Graphic Arts Technical Foundation
Environmental Control Division
Research Department
Pittsburgh, Pennsylvania 15213

I. *Source Location Data

1. Firm Name: _____ Phone _____
2. Address: _____
3. Representative(s) Contacted: _____
4. Plant Code No.: 7-MD (BC)

II. Source and Sample Background Data

5. Date(s) of Test(s): June 7, 1972
6. Process(es) and Basic Equipment (incl. throughput rates): Coating line utilizing a Wagner oven, 1/6 direct externally fired, 5/6 rotary air conveyor type oven controlled by a thermal incinerator.
7. Product(s): Metal signs and displays
8. Amounts Consumed (Monthly Av.)
   A. Paper or other substrates: Not applicable
   B. Inks and Solvents: See Data Sheet #2-ECD
9. Dryer or Oven Equipment:
   A. Type, manufacturer, model: Wagner, direct flame, circulating
   B. Air Flows (rated), Temp.: rated at 7400 cfm @ 170°F discharge temp.
   C. Fuel or Heat Consumption: 4,050,000 Btu/Hr
   D. Comment: No separate metering of gas. Temp. of oven zones continuously monitored and regulated.
10. Stack Geometry:
   A. No. (Single, manifolded) Single exhaust stack
   B. Cross-sectional area: 7.06 sq ft
   C. Height above roof: 4 foot
   D. Approx. running length: 20 foot
   E. Comment: Oven utilizes two exhaust system, one exhaust is primary exhaust of effluent, other is ventilation only.
11. APC Equipment (if any) Thermo direct gas fired fume incinerator Model #120-AH-DP manufactured by Combustion Heat & Power Co.
12. General Comments: Sampling points were ideally located within recommended practice

*Restricted use only.

Test No._____

Plant Code No. 7-MD (BC)

Graphic Arts Technical Foundation
Environmental Control Division
Research Department
Pittsburgh, Pennsylvania 15213

Data #2-ECD

Test Date: 6/7/72
Conditions: Excellent for sampling

Physical and Operational Plant Data

	Reading/Comments
Ambient temperature	80°F
db/wb ambient	Not applicable
db/wb stack	Not applicable
Flue gas - a) sampling point temp.	a) 320°F -
b) stack exit temp.	b) Not applicable
APC - Inlet temp.	1100°F - 1480°F depend. on test requirements
Web temp.	Not applicable
Chill exhaust temp.	Not applicable
Oven/dryer (specify - bake temp.	360°F (bake)
Static press stack "H_2O (H)	0.55
Atmospheric "HG	29.98
Press operating speed	89 sheets/min
Web width/sheet dimensions	26-1/8" x 26-5/16" (688.8 sq in)
No. printing units/No. plate cylinders	one
No. colors per side/coating thickness	13.2 mg/4 sq in
Est. coating/ink usage rate	560 sheets per gallon
Type of paper/sheet	Metal sheet (90#)
Wt. of paper/wt. of coating	7.3 #/gal (54% solvent)

Control Equipment Data

1. Description of unit	Combustion Heat & Power Co. thermo direct gas fired fume incinerator, Model #120-AH-DP, rated at 6000 scfm. Designed for 0.5 sec dwell time for temp. 800-1600°F.
2. Gas consumption:	Rated at 1500 cu ft/hr (1,200,000 Btu/hr capacity of burner unit).
3. Age of unit:	6 months
4. Capital cost of equipment:	$24,000.00
5. Installation cost of equip:	$4,550.00 (includes structural support, electrical & gas piping, duct work and labor).
6. *Fuel cost (operational):	$8,500.00 per year (based on 2-shift, 5-day week)
7. Miscellaneous data:	Typical operating condition for afterburner is for one dryer. Unit is operated at a temp. of 800°F to eliminate visible emission. Overall dimension of the unit is 17'-8"; actual residence chamber length is 53" (includes 4-1/2" of insulation); effective diameter of chamber 44". No blueprints available for unit.

*Unit has not undergone maintenance, therefore, no maintenance cost available.

Data Sheet #3-ECD

Graphic Arts Technical Foundation
Environmental Control Division
Research Department
Pittsburgh, Pennsylvania 15213

Plant Code No. 7-MD (BC)

Date: June 7, 1972

Effluent Sampling Data

Sample #	Time	Period	Probe Configuration	Comments
10, 11	11:35-11:50 am	15 min.	Perpendicular and inserted to center of inlet duct	Duplicate samples of inlet to afterburner for a oleoresinous enamel coating, 89 sheets/min (688.8 sq in) film thickness of 3.3 mg/sq in (54% solvent content) coverage of 0.005 #/sheet.
12, 13	11:35-11:55 am	20 min.	Perpendicular and inserted into combustion chamber	Samples taken of outlet of afterburner at incineration temp. of 1480°F (maximum temp. attainable) (check of this temp. at point of sampling indicated temp. as 1470°F)
14, 15	1:15-1:35 pm	20 min.	Same as samples 12 and 13	Samples taken of outlet of afterburner at incineration temp. of 1300°F. (check of this temp. at point of sampling indicated temp. as 1310°F)
16, 17	1:55-2:15 pm	20 min.	Same as samples 12 and 13	Samples taken at outlet of afterburner at incineration temp. of 1100°F. (check of this temp. at point of sampling indicated temp. as 1110°F)

DATA SHEET #3-ECD-A
(Analytical Results in ppm)

Plant Code No.	Date/Time	Process	Cylinder No.	Total Organics (ppm)	CO (ppm)	CH_4 (ppm)	CO_2 (ppm)
7-MD (BC)	6/7/72 11:35-11:50 am	Inlet to control equip. oleoresinous enamel, 3.3 mg/sq in (54 % solvent) coverage of 0.005 #/sheet	10	3474	143	71	8926
			11	2894	181	68	9030
	6/7/72 1:55-2:15 pm	Outlet of control equip. at T = 1100°F	16	188	548	210	28570
			17	102	349	198	30146
	6/7/72 1:15-1:35 pm	Outlet of control equip. at T = 1300°F	14	25	trace	109	36964
			15	35	127	120	36827
	6/7/72 11:35-11:55 am	Outlet of control equip. at T = 1480°F	12	46	877	107	37700
			13	20	702	60	38977

DATA SHEET #3-ECD-B
(Calculated Emission Rates)

Plant Code No.	Cylinder No.	Total Organics (ppm)	Flow Rate (scfm)	* Organic Emissions (lb/hr)
7-MD (BC)	10	3474	5725	37.82
	11	2894	"	31.61
	16	188	"	2.04
	17	102	"	1.11
	14	25	"	0.27
	15	35	"	0.38
	12	46	"	0.50
	13	20	"	0.21

*Calculated on the following basis:

$$\text{lb carbon/hr} = 1.90 \times 10^{-6} \times \text{scfm} \times \text{ppm}$$

DATA SHEET #3-ECD-C
Calculated Organic Conversion at Various Incineration Temperatures

Plant Code No.	Incineration Temperature (°F)	Inlet Concentration(1) (ppm)	Outlet Concentration(2) (ppm)	% Efficiency(3) (calc)
7-MD (BC)	1100	3184	102 & 188	96.80 & 94.10
	1300	"	25 & 35	99.20 & 98.90
	1480	"	20 & 46	99.38 & 98.56

(1) Average value of duplicate set of samples utilized to establish inlet concentration.
(2) Individual sample result as taken from lab analysis report.
(3) Equation utilized for computing % efficiency as follows:

$$\% \text{ efficiency} = 100 - \frac{\text{outlet C ppm}}{\text{inlet C ppm}} \times 100$$

DATA SHEET #3-ECD-D
Compilation of Operational Data for Usage in Determining Calculated Emission Rates

Plant Code No.	Type of Operation	Sheet Size (sq in)	*Coater Speed Sh/min	*Coater Speed Sh/hr	Film Thickness (mg/sq in)	Solvent/Solids
7-MD (BC)	Oleoresinous Enamel	688.8	89	5073	3.3	.54/.46

*Coater Speed calculated as follows:

sheets/min x 60 x 0.95 (0.95 is factor determined from operational experience to allow for time necessary to change skids).

DATA SHEET #3-ECD-E
Comparison of Calculated and Observed Emission Rates

Plant Code No. 7-MD (BC)

Type of Operation	Organic Emission[a] obs.	Organic Emission[a] calc.	E_{obs}/E_{calc}[b]
Oleoresinous enamel	34.71	55.29	0.63

a. Expressed as lb carbon/hr
b. C as in Equation (4) data treatment of this report

Data Sheet #5-TCD

Test No.: 2
Plant Code No.: 7-MD (BC)
Sampling Location
Inlet to control equipment

Graphic Arts Technical Foundation
Environmental Control Division
Research Department
Pittsburgh, Pennsylvania 15213

Date: June 7, 1972
GATF Personnel:
R. R. Gadomski
A. V. Gimbrone

Gas Velocity Data

Point No.	Time: 10:00-10:15 am			Point No.	Time: 10:20-10:30 am		
	Vel. Head in. H_2O (h)	Temp °F	Velocity ft/sec		Vel. Head in. H_2O (h)	Temp °F	Velocity ft/sec
A-1	0.06	320	20.6	B-1	0.05	320	18.0
A-2	0.07	320	21.5	B-2	0.06	320	20.6
A-3	0.07	320	21.5	B-3	0.07	320	21.5
A-4	0.08	320	22.9	B-4	0.07	320	21.5
A-5	0.07	320	21.5	B-5	0.07	320	21.5
A-6	0.06	320	20.6	B-6	0.06	320	20.6
Av.		320	21.4	Av.		320	20.6

A. Av. velocity (raverse) ft/sec 21.0
B. Av. velocity (ref. pt.) ft/sec N/A
C. Flue factor A/B N/A
D. Pitot Tube correction factor (if any) 1.0
E. Gas density factory (ref. to air) 1.0
F. Corrected velocity B x C x D x E ft/sec 21.0
G. Area of flue, sq. ft. 7.06
H. Av. flue temp. °F 320
I. Flow rate @ stack cond.
F x G x 60, acfm 8800
J. P_s = 29.94
K. Corrected to std. cond.
Flow rate = $\frac{520 \times I \times P_s}{(H + 460) \times 29.92}$ scfm 5725

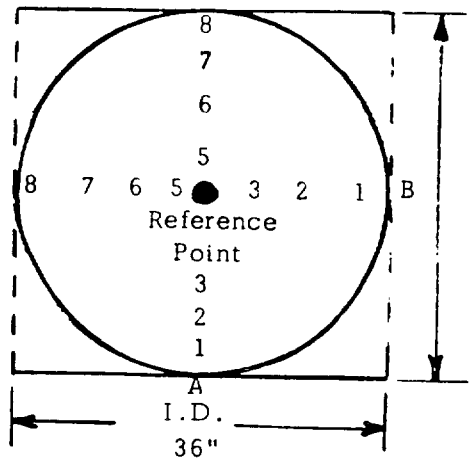

Static (ΔH) "H_2O = 0.55
P_g = ΔH/13.6 = 0.04
P_{atm} "H_g = 29.98
$P_s = P_{atm} - P_g$ = 29.94

Approved PMR

CARNEGIE-MELLON UNIVERSITY

MELLON INSTITUTE

RESEARCH SERVICES

Physical Measurements Laboratory (7615-2)

Fellow Mr. Ray Gadomski (2)

Account No. Graphic Arts Technical Foundation P.O. #3104

Investigation Air Pollution Program

Investigation No. PML 72-220 (7-MD) (BC)

Date of Report July 14, 1972

NATURE OF REPORT: Preliminary ____ Progress ____ Final x

The eight samples of stack gas effluent which you submitted have been analyzed by the procedure described in a recent report dated December 17, 1971. The results are tabulated in the attached table.

Paul R. Eisaman

Paul R. Eisaman
Fellow
Physical Measurements Laboratory

PRE:jdf

Form 111

Table I

Stack Gas Samples

Code 7-M.D.-BC

Cylinder No.	10	11	12	13	14	15	16	17
Sample Volume, cc NTP	271	286	279	277	274	267	277	273
Content, v/v % as CO_2								
Carbon Monoxide	0.0143	0.0181	0.0877	0.0702	trace	0.0127	0.0548	0.0349
Carbon Dioxide	0.8926	0.9030	3.7700	3.8977	3.6964	3.6827	2.8570	3.0146
Methane	0.0071	0.0068	0.0107	0.0060	0.0109	0.0120	0.0210	0.0198
Organics	0.0022	0.0023	0.0044	0.0020	0.0025	0.0035	0.0171	0.0100
Traps, Low Boilers	0.2832	0.2720	0.0001	0.0000	0.0000	0.0001	0.0009	0.0002
Traps, High Boilers	0.0620	0.0151	0.0001	0.0000	0.0000	0.0000	0.0008	0.0000

APPENDIX F

Carnegie Mellon University
Mellon Institute
Physical Measurements Laboratory
Reports

Approved J.M.

CARNEGIE-MELLON UNIVERSITY

MELLON INSTITUTE
RESEARCH SERVICES

Physical Measurements Laboratory (7615-2)

Fellow Mr. Ray Gadomski

Account No. Graphic Arts Technical Foundation P.O. #3104

Investigation GATF Air Pollution Program II: Addendum

Investigation No. PML 71-40

Date of Report August 17, 1972

NATURE OF REPORT: Preliminary ____ Progress ____ Final x

I. Introduction

A report titled "GATF Air Pollution Program II" was issued December 17, 1971. It described in detail the instrumentation and procedures which have been developed for the collection and analysis of stack gas samples pertinent to the printing industry.

Continuing experience with the procedure has disclosed a source of error described below. Corrective measures were taken following the sample set designated Plant Code 7-W.O., and reported as PML 72-236, December 23, 1971.

2. Detector Overloading

That part of the stack gas samples which is collected in the dry-ice cooled trap is analyzed by a gas chromatograph equipped with a hydrogen flame detector. The flame detector has the advantage of linear response through seven orders of magnitude. However, the response undergoes minor day to day variations caused by small changes in gas flow rates and by changes in electrical leakage through carbon deposits at the flame head.

Form 111

To compensate for these variations, the practice in this laboratory was to calibrate the detector before and after each series of analyses. The procedure of the calibration was to place 10μ l. n-heptane in a trap chilled to 0°C., and to permit the n-heptane to be carried into the detector with the controlled helium flow of the chromatograph.

During the experiments with a stack simulator (see "Stack Simulator II; PML 71-17; May 1, 1972) inconsistent data for calibrations with cyclohexane and n-heptane were obtained. These were found to be the result of detector overloading by too rapid entry of the hydrocarbons.

Studies indicated that n-heptane must be maintained at or below -16°C. during its evaporation into the detector in order to maintain the response of the detector within its linear range. (The vapor pressure of n-heptane at 0°C. is 11.37 mm. Hg, and at -16°C. is 3.89 mm Hg.).

R. J. Reitz
Senior Fellow
Physical Measurements Laboratory

RJR:jdf

Approved BMR

CARNEGIE-MELLON UNIVERSITY

MELLON INSTITUTE

RESEARCH SERVICES

Physical Measurements Laboratory (7615-2)

Fellow Mr. Ray Gadomski

Account No. Graphic Arts Technical Foundation P.O. #3104

Investigation GATF Air Pollution Program

Investigation No. PML 72-229

Date of Report August 14, 1972

NATURE OF REPORT: Preliminary ____ Progress ____ Final x

Mr. Gimbrone has requested an effort be made to determine the magnitude of the error in the analyses of the sample traps and sample trap-probes during the time the calibration bath was maintained at zero degrees centigrade. This includes all trap analyses through Plant Code No. 7-W.O., PML 72-236, December 23, 1971.

Assuming that present conditions (sensitivity, gas flows, non-linear response, etc.) are identical to the past work, a set of data was taken to determine the difference between the calibration factors by alternating a calibration at 0°C. and -16°C.

The average value as calculated from this data indicates the trap, trap-probe values are too high by 24.9%.

Paul R. Eisaman

Paul R. Eisaman, Fellow
Physical Measurements Laboratory

PRE:jdf

Form 111

MAY 1 2 1972
GATF

Approved

CARNEGIE-MELLON UNIVERSITY
MELLON INSTITUTE
RESEARCH SERVICES

Physical Measurements Laboratory (7615-2)

Fellow: Mr. Ray Gadomski

Account No.: Graphic Arts Technical Foundation 3104

Investigation: Erratum

Investigation No.: PML 72-24

Date of Report: May 10, 1972

NATURE OF REPORT: Preliminary ____ Progress ____ Final x

Mr. Anthony Gimbrone has detected and brought to our attention an error in an equation which has appeared in two reports from this laboratory. The reports are:

GATF Air Pollution Program; PML 70-2; October 2, 1970
Section IV-B-2-e, page 14

GATF Air Pollution Program II; PML 71-4; December 17, 1971
Section IV-e, page 5

The equation, as written in the reports, is:

$$V_{GC} = \left(\frac{P_1 - P_2}{P_1}\right)V_c$$

The correct equation is:

$$V_{GC} = \left(\frac{P_1 - P_2}{P_2}\right)V_c$$

The effect of the error is to decrease the calculated total volume of the sample by the factor 0.9948 ± 0.0004, and to increase the calculated hydrocarbon contents by the factor 1.0052 ∓ 0.0004.

Please correct the equation in copies of these reports which are in your files.

R. J. Reitz, Senior Fellow
Physical Measurements Laboratory

RJR:jdf

Form 111

Approved

CARNEGIE-MELLON UNIVERSITY

MELLON INSTITUTE
RESEARCH SERVICES

Physical Measurements Laboratory (7615-2)

Fellow Dr. E.L. Schaeffer

Account No. Graphic Arts Technical Foundation 3104

Investigation Stack Simulator

Investigation No. PML 71-17

Date of Report July 27, 1971

NATURE OF REPORT: Preliminary ____ Progress x Final ____

I. Introduction

At a meeting on May 19, 1971, this laboratory was asked to construct a device which would provide an air stream containing known quantities of hydrocarbons and which would be suitable for testing stack gas sampling rates.

An error in design occurred which was elusive, but which has been identified and corrected.

II. Design

During the meeting, agreement was reached on a provisional method to supply the synthetic stack gas. The major flow would be obtained from a large high pressure cylinder of air containing 10 ppm each of methane and butane to be purchased from a commercial source. The major hydrocarbon content would be supplied by a small flow of nitrogen which was saturated at a selected sub-ambient temperature with an appropriate hydrocarbon (e.g. cyclohexane).

Form 111

III. Flow Calculations

Nomenclature:

F_i^t = flow rate of i at temperature t, cc/min.

P_i = partial pressure of i, mm-Hg

P' = barometric pressure, mm-Hg

N-subscript = nitrogen

A-subscript = cylinder air with added methane and butane

C-subscript = cyclohexane

The equations below assume that there is negligible pressure drop from the points at which flow rates are measured to the atmosphere.

$$F_N^{16°} = F_N^t \left(\frac{273 + 16}{273 + t}\right)$$

$$P_N^{16°} + P_C^{16°} = P$$

$$F_C^{16°} = F_N^{16°} \left(\frac{P_C^{16°}}{P_N^{16°}}\right)$$

$$F_C^t = F_C^{16°} \left(\frac{273 + t}{273 + 16}\right)$$

$$\sum F_i = F_N + F_C^t + F_A$$

Concentration of cyclohexane as CO_2 $= 6 \dfrac{F_C^t}{\sum F_i}$

$$\log P_C = 6.84498 - \frac{1203.526}{t + 222.863}$$

$$P_C^{16°} = 64.037 \text{ mm-Hg}$$

IV. Apparatus Assembly

1. Air Stream

The air stream was taken directly from the cylinder of air containing 10 ppm methane and 9 ppm n-butane through a pressure reducer and needle valve. The flow rate was measured with a rotameter (Fischer and Porter, 12 liter/min. capacity). Connections from the cylinder to the rotameter and from the rotameter to the inlet of the stack simulator were made with 1/4" copper tubing.

2. Saturator

The saturator employed a classical design which, perhaps because of construction difficulties, is not often used. In effect, it is a channel formed from a long member having an inverted-U cross-section, the lower edges of which dip into, and are sealed by, the saturating liquid. In practice, compact size is attained by "folding". The unit available has an effective path length of 9 ft. The merits of the design are minimal pressure drop and freedom from entrained spray.

The flow of nitrogen through the saturator was obtained from the carrier gas control system of a gas chromatograph. Its volumetric rate was monitored by a soap-film flow meter.

3. Stack

The construction of the stack is shown in the accompanying drawing.

The body is made from 2" x 3/32" wall aluminum tubing which is attached to a cone-shaped member at its base. The nitrogen-cyclohexane enters at the bottom and was carried to a mixing point just below a screen at the apex of the cone. The high flow air stream enters

through the side member of the T-connector. The cone and the lower 1/2" of the tubing are filled with laboratory still packing (Helipak 3008 SS, 0.092" x 0.175" x 0.175") to distribute and smooth the upward flow of gas. The top of the stack is capped with wire screening to minimize disturbance from external air movement. There is a hole in the side of the cylinder at 11" above the cone for insertion of the probe of the sampler.

V. Experimental

1. Sampling Time Variation

The stack simulator was used to study the effect of sampling rate on the efficiency of the dry ice-cooled trap of the stack gas sampler presently in use by personnel of the Graphic Arts Technical Foundation.

Six samples were collected with collection periods ranging from 0.53 to 30.0 min. The sequence of the sampling periods was randomized. The concentration of cyclohexane in the flowing stack gas as calculated from the equations in Section III was 0.594 v/v % as CO_2. The samples were analyzed by the gas chromatographic methods which are in routine use for field samples.

The data for the samples is given in Table I. With a single exception, the samples have inordinately high trap collections.

2. Lower Cyclohexane Level in Saturator

If the trap contents in Table I are correlated with the order in which the samples were taken, there is an indication that the hydrocarbon content of the gas flow increased with time. A possible

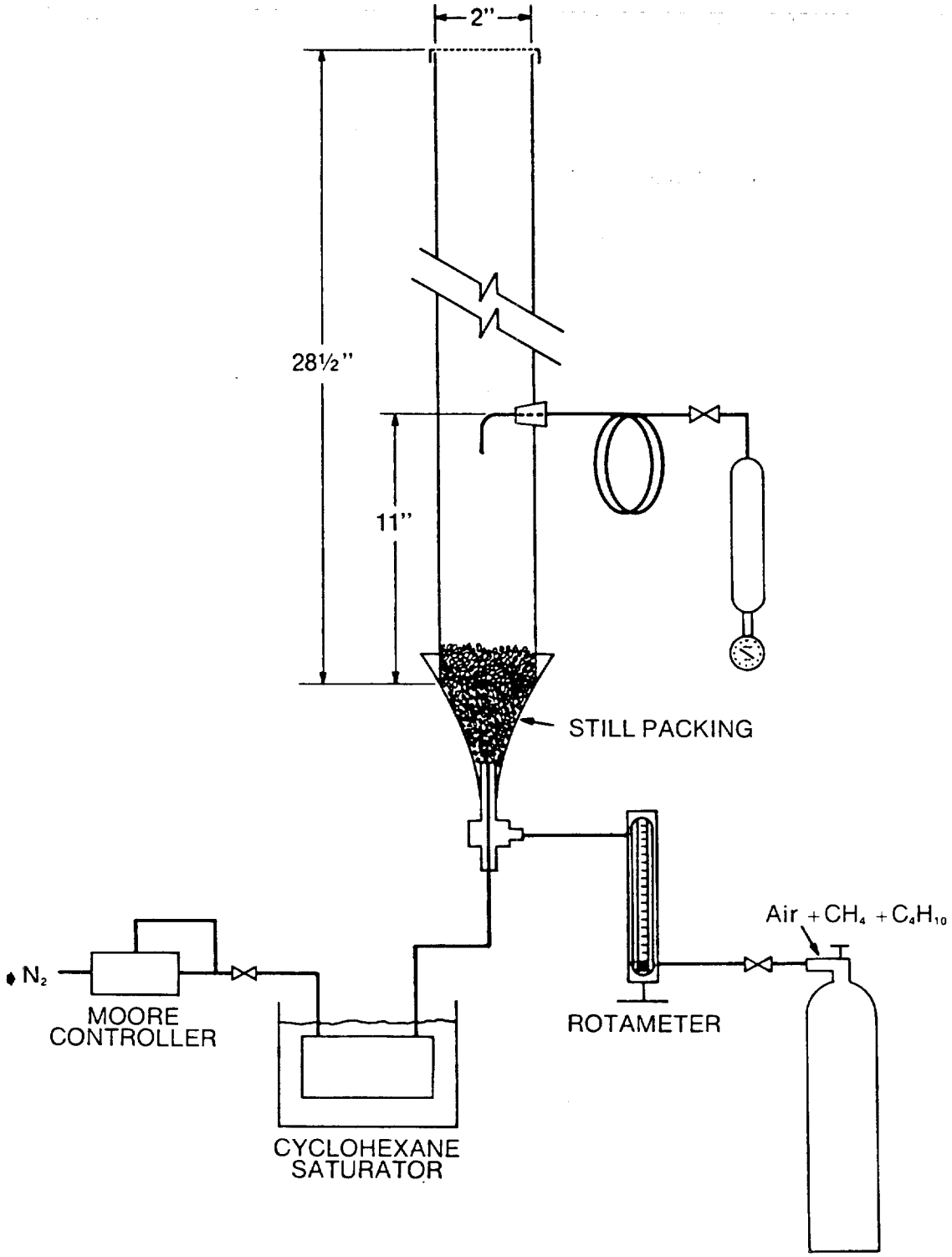
2"
28½"
11"
STILL PACKING
Air + CH_4 + C_4H_{10}
N_2
MOORE CONTROLLER
ROTAMETER
CYCLOHEXANE SATURATOR

mechanism for this occurrence is the entrainment of spray in the saturator and its transport to higher temperature regions of the apparatus.

To test this thesis, the level of cyclohexane in the saturator was lowered substantially. The test results are given in Table II, and clearly indicate that this was not the cause of the high cyclohexane concentrations.

3. Confirmation of Flow Rates

The calculated delivery of cyclohexane was confirmed by trapping the hydrocarbon with liquid nitrogen and weighing the condensate.

The rotameter in the air stream was cleaned and its reading checked against another rotameter and against a wet test meter.

There were no discrepancies, but, as indicated in Table III, high cyclohexane concentrations in the stack simulator persisted.

4. Concentration Gradient

After the confirmation of the flow rates, it became clear that the cyclohexane distribution could not be uniform. A negative radial concentration gradient must exist in the stack simulator since the sample was taken at the stack center.

The point of mixing of the high flow air stream and the low flow cyclohexane stream was shifted from that in the drawing, to a point at the level of the horizontal entry of the air stream. Two small holes were also drilled in the sides of the tubing transporting the cyclohexane.

The analysis of two samples taken after this modification are shown in Table IV. The agreement with the calculated concentration is satisfactory.

VI. Summary

Although it has taken a greater effort than was envisioned, a stack simulator is now available to test the efficiency of trap collection.

P. R. Eisaman per RJR

P. R. Eisaman
Fellow

R. J. Reitz

R. J. Reitz
Senior Fellow
Physical Measurements Laboratory

RJR:jdf

Stack Simulator Measurements

Table No.		Cylinder No.	Order	Time, min.	Content, v/v % as CO_2 Methane	Organics	Trap
1	6-22-71	6	6	0.53	0.0011	0.0122	1.0643
		23	1	1.67	0.0010	0.0089	0.8044
		22	2	7.0	0.0010	0.0097	0.4061
		17	4	16.0	0.0011	0.0100	0.9664
		21	5	23.5	0.0010	0.0043	0.8890
		24	3	30.0	0.0011	0.0055	0.7543
2	7-14-71	24		22			1.1151
		23		21			1.1418
		17		21			1.1355
3	7-16-71	24		22			0.9239
		17		22			1.0887
4	7-22-71	17		22			0.6109
		24		22			0.6053
		Calculated					0.594

Approved

CARNEGIE-MELLON UNIVERSITY

MELLON INSTITUTE

RESEARCH SERVICES

Physical Measurements Laboratory (7615-2)

Fellow: Mr. Ray Gadomski

Account No.: Graphic Arts Technical Foundation 3104

Investigation: Stack Simulator II

Investigation No.: PML 71-17

Date of Report: May 1, 1972

NATURE OF REPORT: Preliminary ____ Progress x Final ____

I. Introduction

At a meeting on May 19, 1971, this laboratory was requested to construct a device which would provide an air stream containing known quantities of hydrocarbons and which would be suitable for testing the reliability of stack gas sampling and analysis methods in use.

This report summarizes work reported earlier (July 27, 1971) and describes additional studies made with the stack simulator.

II. Design

A schematic drawing of the stack simulator is shown in Figure 1. The major flow through the stack is supplied from a cylinder of air containing 9 ppm butane and 10 ppm methane. (When this cylinder was exhausted, the latest tests have used a cylinder of nitrogen.) The major hydrocarbon content is supplied by a small flow of nitrogen which is saturated at 16°C. with cyclohexane.

Form 111

III. Flow Calculations

Nomenclature:

F_i^t = flow rate of i at temperature t, cc/min.

P_i = partial pressure of i, mm-Hg

P = barometric pressure, mm-Hg

N-subscript = nitrogen

A-subscript = cylinder air with added methane and butane

C-subscript = cyclohexane

The equations below assume that there is negligible pressure drop from the points at which flow rates are measured to the atmosphere.

$$F_N^{16°} = F_N^t \left(\frac{273 + 16}{273 + t}\right)$$

$$P_N^{16°} + P_C^{16°} = P$$

$$F_C^{16°} = F_N^{16°} \left(\frac{P_C^{16°}}{P_N^{16°}}\right)$$

$$F_C^t = F_C^{16°} \left(\frac{273 + t}{273 + 16}\right)$$

$$\sum F_i = F_N + F_C^t + F_A$$

$$\text{Concentration of cyclohexane as } CO_2 = 6 \frac{F_C^t}{\sum F_i}$$

$$\log P_C = 6.84498 - \frac{1203.526}{t + 222.863}$$

$$P_C^{16°} = 64.037 \text{ mm-Hg}$$

$$F_N^{Rota.} = F_{chart} \cdot \left(\frac{T}{530°R} \cdot \frac{28.953}{\text{Mol. Wt.}} \cdot \frac{760 \text{ mm}}{P}\right)^{1/2}$$

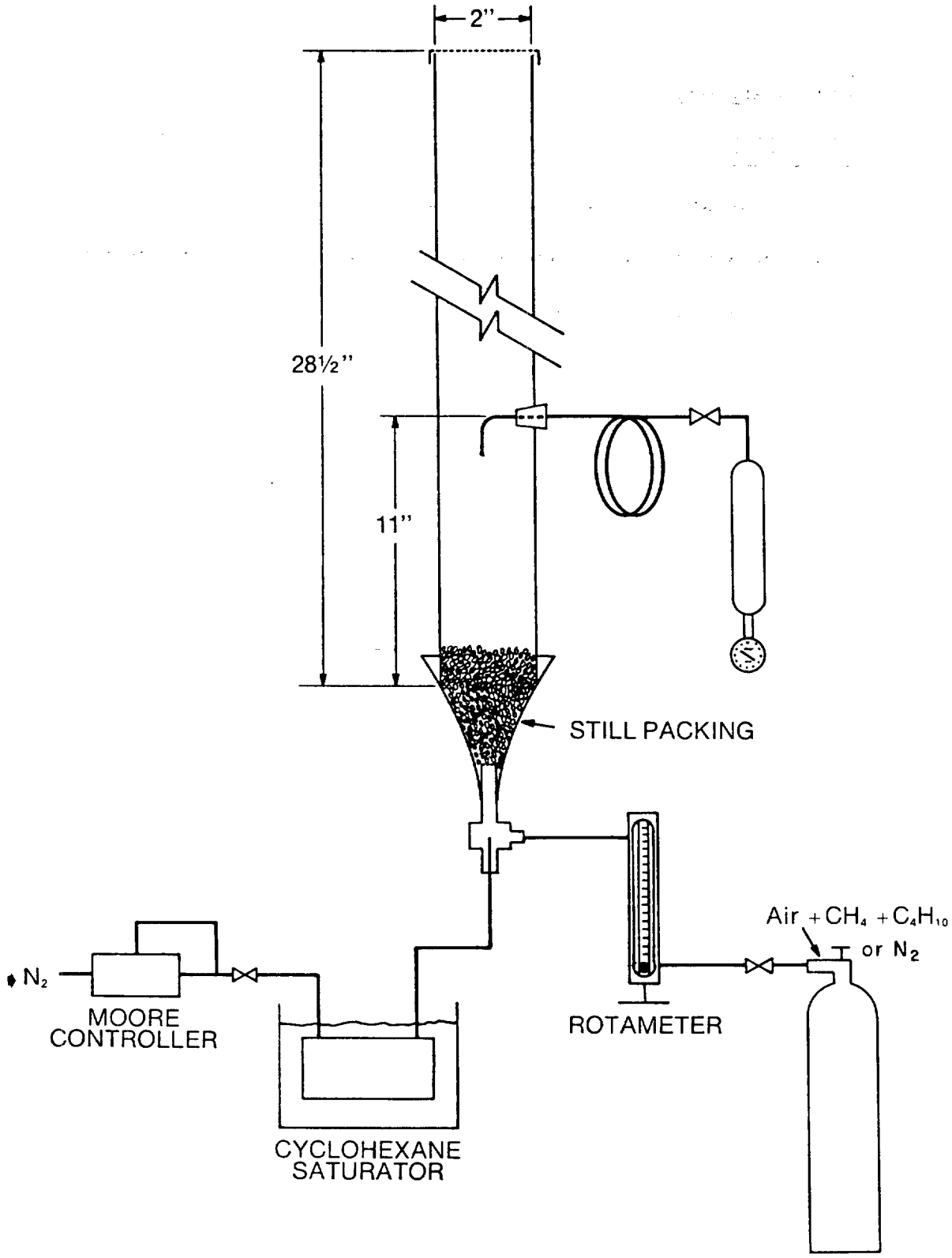
2"
28½"
11"
STILL PACKING
Air + CH_4 + C_4H_{10}
or N_2
N_2
MOORE
CONTROLLER
ROTAMETER
CYCLOHEXANE
SATURATOR

IV. Apparatus Assembly

1. Gas Stream

The gas stream was taken directly from a cylinder of nitrogen through a pressure reducer and needle valve. The flow rate was measured with a rotameter (Fischer and Porter, 12 liter/min. capacity). Connections from the cylinder to the rotameter and from the rotameter to the inlet of the stack simulator were made with 1/4" copper tubing.

2. Saturator

The saturator employed a classical design. In effect, it is a channel formed from a long member having an inverted-U cross-section, the lower edges of which dip into, and are sealed by, the saturating liquid. In practice, compact size is attained by "folding". The unit available has an effective path length of 9 ft. The merits of the design are minimal pressure drop and freedom from entrained spray.

The flow of nitrogen through the saturator was obtained from the carrier gas control system of a gas chromatograph. Its volumetric rate was monitored by a soap-film flow meter.

3. Stack

The construction of the stack is shown in the accompanying drawing.

The body is made from 2" x 3/32" wall aluminum tubing which is attached to a cone-shaped member at its base. The nitrogen-cyclohexane enters at the bottom and was carried to a mixing point at the level of the air stream entry. The high flow air stream enters

through the side member of the T-connector. The cone and the lower 1/2" of the tubing are filled with laboratory still packing (Helipak 3008 SS, 0.092" x 0.175" x 0.175") to distribute and smooth the upward flow of gas. The top of the stack is capped with wire screening to minimize disturbance from external air movement. There is a hole in the side of the cylinder at 11" above the cone for insertion of the probe of the sampler.

V. Re-examination of Earlier Data

In the first progress report for this study (Stack Simulator, July 27, 1971, Table Nos. 1, 2, and 3), excessively high trap-contents were obtained. The data for these analyses have been re-examined, but the most plausible explanation is still the assumption that a negative radial concentration gradient in the stack was the major cause of the high trap analyses.

VI. Interim Tests

Analysis of samples taken from the stack simulator continued. Results were obtained for the CO_2 equivalent of the trap contents which ranged from 0.459 to 0.750 v/v %.

The major source of error did not become apparent until the trap contents of two samples were calculated using calibration factors obtained both with cyclohexane and with n-heptane:

Standard	n-Heptane	Cyclohexane
Trap 20	0.5120	0.6755
Trap 22	0.5227	0.6897

The interpretation of these data is that the higher volatility of cyclohexane relative either to n-heptane or to a field sample had not been compensated. Both the cyclohexane from the stack simulator traps and from the calibrations were randomly overloading the hydrogen flame detector of the chromatograph.

The normal procedure for the injection of trap samples into the chromatograph is first to cool the trap to -78° and to hold at this temperature until the recorder returns to base line. The dry ice trap is then replaced by ordinary ice, and is finally heated to as high a temperature as is necessary. For calibration with n-heptane, the trap has been cooled first in dry ice and then taken to 0° for the completion of the injection.

Further tests were made with both cyclohexane and with n-heptane. They indicate that cyclohexane should not be evaporated into the chromatograph at a temperature higher than -31°, and that n-heptane should be held at -16°.

VII. Latest Stack Simulator Samples

1. Carrier Gas

In all previous stack simulator experiments, the carrier gas was obtained from a cylinder of air containing 9 ppm butane and 10 ppm methane. This cylinder of air was exhausted by the last previous set of measurements. Water pumped nitrogen was substituted for it in the latest tests which are reported here.

2. Methane Analyses

Since methane was not in the present carrier gas, the analyses obtained for the nine previous cylinder samples which were analyzed are substituted here:

11, 10, 10, 11, 10, 11, 10, 10, 10: Avg. 10.3 ppm

Supplier's analysis: 10 ppm

3. Butane Analyses

Butane is detected as a part of the reverse flush "organics" of the cylinder gas analysis. In all of the stack simulator samples, it has been masked by cyclohexane which has not been condensed in the traps.

Supplier's analysis: 9 ppm

4. Carrier Gas Flow

The corrected carrier gas flow was:

$$F_N^{Rota} = 3940 \frac{cc.}{min.} \left(\frac{299.4°C.}{294.2°C.} \cdot \frac{28.953}{28.016} \cdot \frac{760}{740.9} \frac{mm\ Hg}{mm\ Hg}\right)^{1/2}$$

$$= (3940)\ (1.0388) \frac{cc.}{min.}$$

$$= 4092.7 \frac{cc.}{min.}$$

5. Saturator Gas Flows

$$F_N^{26.3°} = 39.0 \frac{cc.}{min.} \qquad \text{(Soap film meter)}$$

$$F_N^{16°} = 39.0 \frac{cc.}{min.} \cdot \frac{273.15 + 16.00}{273.15 + 26.3}$$

$$= 37.7 \frac{cc.}{min.}$$

$$P_N^{16°} = P_{Bar} - P_c^{16°}$$

$$= 740.9 - 64.04$$

$$= 676.9 \text{ mm}$$

$$\log P_c = 6.84498 - \frac{1203.526}{t + 222.863}$$

$$P_c^{16°} = 64.037 \text{ mm}$$

$$F_c^{16°} = F_N^{16°} \left[\frac{P_c^{16°}}{P_N^{16°}}\right]$$

$$= 37.7 \frac{cc.}{min.} \cdot \frac{64.04 \text{ mm}}{676.9 \text{ mm}}$$

$$= 3.56 \frac{cc.}{min.}$$

$$F_c^{26.3°} = 3.56 \frac{cc.}{min.} \cdot \frac{299.45°}{289.15°}$$

$$= 3.69 \frac{cc.}{min.}$$

6. <u>Stack Simulator Gas Flow</u>

$$\Sigma F_i = F_N^{Sat'r} + F_c + F_N^{Stack}$$

$$= (39.0 + 3.69 + 4093) \frac{cc.}{min.}$$

$$= 4136 \frac{cc.}{min.}$$

$$\text{Cyclohexane concentration as } CO_2 = 6 \left[\frac{F_c^{26.3}}{\Sigma F_i^{26.3}} \right]$$

$$= 6 \left(\frac{3.69}{4136}\right)$$

$$= 0.535 \text{ v/v } \%$$

7. Trap Analyses

Calibration with cyclohexane:

10λ = 12.37 cc. CO_2 = 565.6 megacounts

= 561.9 megacounts

Avg. = 563.7 ± 2.6 megacounts

Calibration factor = K = $45.55 \pm 0.21 \frac{\text{megacounts}}{\text{cc.}}$

Analyses:

Trap No. 20/sample volume = $\frac{64.66 \text{ megacounts}}{K \cdot 275.3 \text{ cc.}}$ = 0.5156 v/v % CO_2

Trap No. 21/sample volume = $\frac{64.70 \text{ megacounts}}{K \cdot 272.0 \text{ cc.}}$ = 0.5222 v/v % CO_2

Trap No. 24/sample volume = $\frac{56.34 \text{ megacounts}}{K \cdot 241.0 \text{ cc.}}$ = 0.5132 v/v % CO_2

8. Cylinder Analyses

Calibration with methane:

1.000 cc. CH_4 = 1.000 cc. CO_2 = 316.6 megacounts

Calibration factor = $K' = \frac{316.6 \text{ megacounts}}{\text{cc.}}$

Cylinder No. 11 = $0.0174 \frac{\text{megacounts}}{\text{cc.}}$ = 0.0055 v/v % CO_2

Cylinder No. 9 = $0.0000 \frac{\text{megacounts}}{\text{cc.}}$ = 0.0000 v/v % CO_2

Cylinder No. 23 = $0.0222 \frac{\text{megacounts}}{\text{cc.}}$ = 0.0070 v/v % CO_2

9. Total Sample Analyses

Trap No.	Cyl. No.	Total Hydrocarbons, v/v % as CO_2
20	11	0.5156 + 0.0055 = 0.5211
21	9	0.5222 + 0.0000 = 0.5222
24	23	0.5132 + 0.0070 = 0.5202
		Average = 0.5212 ± 0.0014 v/v %

10. Analysis of Error

a. Stack Simulator

If it is assumed that no radial concentration gradient exists in the stack simulator, the three most probable sources of error are the measurement of the 4 l./min. N_2 stream, the small N_2 stream into the saturator, and the temperature of the saturator. The first of these is quite significant: the anticipated error for a rotameter is $\pm$ 1% at full scale, and since it is primarily an error of read-out, it is $\pm$ 3% at 1/3-full scale which was the operating point for these tests. (Reference: "Theory of the Rotameter", Catalog Section 98-Y, p. 9814-9816, Fischer & Porter Co., Hatboro, Pa.).

b. Error of Trap Analyses

The standard deviation, $\pm$ 0.0014 v/v %, which was calculated for the three samples listed in Section VII-9, represents the error in the analytical manipulations including the measurement of the sample volume.

It does not, however, include the error of calibration. This may be estimated from the calibration factor:

$$K = 45.55 \pm 0.21 \frac{\text{megacounts}}{\text{cc. } CO_2}$$

This must be combined with the error in the analytical manipulations:

Total Hydrocarbons = 0.5212 $\pm$ 0.0014%

The final average for the analyses of the three stack simulator samples is then:

Total Hydrocarbons as CO_2 = 0.5212 $\pm$ 0.0028 v/v %.

c. Stack Simulator vs. Sample Analyses

The calculated hydrocarbon content of the stack simulator flow is:

Total Hydrocarbons as CO_2 = 0.535 ± 0.016 v/v %

The average for the three analyses is:

Total Hydrocarbons as CO_2 = 0.5212 ± 0.0028%

The analyses are within a standard deviation of the calculated hydrocarbon content of the flow in the stack simulator.

P. R. Eisaman, Fellow

R. J. Reitz, Senior Fellow
Physical Measurements Laboratory

RJR:jdf

Approved

CARNEGIE-MELLON UNIVERSITY

MELLON INSTITUTE

RESEARCH SERVICES

Physical Measurements Laboratory (7615-2)

Fellow Mr. Ray Gadomski

Account No. Graphic Arts Technical Foundation P.O. 3104

Investigation Stack Simulator II: Errata

Investigation No. PML 72-40

Date of Report August 14, 1972

NATURE OF REPORT: Preliminary ____ Progress ____ Final x

I. Introduction

Mr. Anthony Gimbrone has called attention to an error in the calculation of the standard deviation for the total hydrocarbons of three cyclohexane replicates reported in PML 71-17: Stack Simulator II.

Re-examination of the report has disclosed other discrepancies. The pertinent sections have been corrected and are reproduced in the following text.

II. Section VII, Part 7 Trap Analyses (page 8)

Calibration with cyclohexane:

$$10\ \lambda = 12.37 \text{ cc. } CO_2 = 565.6 \text{ megacounts}$$
$$= 561.9 \text{ megacounts}$$

$$\text{Avg.} = 563.7_5 \pm 3.2_8 \text{ megacounts}$$

$$\text{Calibration factor} = K = 45.57 \pm 0.27 \ \frac{\text{megacounts}}{\text{cc.}}$$

Analyses:

$$\text{Trap No. 20/sample volume} = \frac{64.55 \text{ megacounts}}{K \cdot 265.3 \text{ cc.}} = 0.5154 \text{ v/v\% } CO_2$$

$$\text{Trap No. 21/sample volume} = \frac{64.70 \text{ megacounts}}{K \cdot 272.0 \text{ cc.}} = 0.5220 \text{ v/v\% } CO_2$$

$$\text{Trap No. 24/sample volume} = \frac{56.34 \text{ megacounts}}{K \cdot 241.0 \text{ cc.}} = 0.5130 \text{ v/v\% } CO_2$$

Form 111

III. Section VII. Part 9, Total Sample Analyses (page 8)

Trap No.	Cyl. No.	Total Hydrocarbons, v/v% as CO_2
20	11	0.5154 + 0.0055 = 0.5209
21	9	0.5220 + 0.0000 = 0.5222
24	23	0.5130 + 0.0070 = 0.5200

Average = $0.5210_3 \pm 0.0008_4$ v/v%

IV. Section VII, Part 10b, Error of Trap Analyses (page 9)

The standard deviation, $\pm 0.0008_4$ v/v%, which was calculated for the three samples listed in Section VII-9, represents the error in the analytical manipulations including the measurement of the sample volume.

It does not, however, include the error of calibration. This may be estimated from the calibration factor:

$$K = 45.57 \pm 0.27 \text{ megacounts/cc.}$$

This must be combined with the error in the analytical manipulations:

$$\text{Total Hydrocarbons} = 0.5210_3 \pm 0.0008_4 \text{ v/v\%}$$

The final average for the three stack simulator samples is then:

$$\text{Total hydrocarbons as } CO_2 = 0.5210 \pm 0.0061$$

V. Section VII, Part 10c, Stack Simulator vs. Sample Analyses (page 10)

The calculated hydrocarbon content of the stack simulator flow is:

$$\text{Total hydrocarbons as } CO_2 = 0.535 \pm 0.016 \text{ v/v \%}$$

The average for the three analyses is:

$$\text{Total hydrocarbons as } CO_2 = 0.5210 \pm 0.0061\%$$

The analyses are within a standard deviation of the calculated content of the flow in the stack simulator.

R. J. Reitz
Senior Fellow
Physical Measurements Laboratory

RJR:jdf

Approved

CARNEGIE-MELLON UNIVERSITY

MELLON INSTITUTE

RESEARCH SERVICES

Physical Measurements Laboratory (7615-2)

Fellow Mr. Ray Gadomski

Account No. Graphic Arts Technical Foundation P.O. #3104

Investigation Stack Simulator II: Errata II

Investigation No. PML 72-46

Date of Report September 25, 1972

NATURE OF REPORT: Preliminary ____ Progress ____ Final x

I. Introduction

Mr. Anthony Gimbrone has called attention to an error in the calculation of the standard deviation for the total hydrocarbons of three cyclohexane replicates reported in PML 71-17: Stack Simulator II.

Re-examination of the report has disclosed other discrepancies. The pertinent sections have been corrected and are reproduced in the following text.

II. Section VII, Part 7 Trap Analyses (page 8)

Calibration with cyclohexane:

$$10\ \lambda = 12.37 \text{ cc. } CO_2 = 565.6 \text{ megacounts}$$
$$= 561.9 \text{ megacounts}$$

$$\text{Avg.} = 563.7_5 \pm 3.2_8 \text{ megacounts}$$

$$\text{Calibration factor} = K = 45.57 \pm 0.27 \ \frac{\text{megacounts}}{\text{cc.}}$$

Analyses:

$$\text{Trap No. 20/sample volume} = \frac{64.66 \text{ megacounts}}{K \cdot 275.3 \text{ cc.}} = 0.5154 \text{ v/v\% } CO_2$$

$$\text{Trap No. 21/sample volume} = \frac{64.70 \text{ megacounts}}{K \cdot 272.0 \text{ cc.}} = 0.5220 \text{ v/v\% } CO_2$$

$$\text{Trap No. 24/sample volume} = \frac{56.34 \text{ megacounts}}{K \cdot 241.0 \text{ cc.}} = 0.5130 \text{ v/v\% } CO_2$$

Form 111

III. Section VII. Part 9, Total Sample Analyses (page 8)

Trap No.	Cyl. No.	Total Hydrocarbons, v/v% as CO_2
20	11	0.5154 + 0.0055 = 0.5209
21	9	0.5220 + 0.0000 = 0.5220
24	23	0.5130 + 0.0070 = 0.5200

Average = $0.5209_7 \pm 0.0010_0$

IV. Section VII, Part 10b, Error of Trap Analyses (page 9)

The standard deviation, $\pm 0.0010_0$ v/v%, which was calculated for the three samples listed in Section VII-9, represents the error in the analytical manipulations including the measurement of the sample volume.

It does not, however, include the error of calibration. This may be estimated from the calibration factor:

$$K = 45.57 \pm 0.27 \text{ megacounts/cc.}$$

This must be combined with the error in the analytical manipulations:

$$\text{Total Hydrocarbons} = 0.5209_7 \pm 0.0010_0 \text{ v/v\%}$$

The final average for the three stack simulator samples is then:

$$\text{Total hydrocarbons as } CO_2 = 0.5210 \pm 0.0032$$

V. Section VII, Part 10c, Stack Simulator vs. Sample Analyses (page 10)

The calculated hydrocarbon content of the stack simulator flow is:

$$\text{Total hydrocarbons as } CO_2 = 0.535 \pm 0.016 \text{ v/v\%}$$

The average for the three analyses is:

$$\text{Total hydrocarbons as } CO_2 = 0.5210 \pm 0.0032\%$$

The analyses are within a standard deviation of the calculated content of the flow in the stack simulator.

R. J. Reitz
Senior Fellow
Physical Measurements Laboratory

RJR:jdf

Approved

CARNEGIE-MELLON UNIVERSITY

MELLON INSTITUTE

RESEARCH SERVICES

Physical Measurements Laboratory (7615-2)

Fellow: Dr. Wm. Schaeffer

Account No.: Graphic Arts Technical Foundation 3104

Investigation: Isokinetic Stack Samples

Investigation No.: PML 71- 23

Date of Report: July 29, 1971

NATURE OF REPORT: Preliminary ____ Progress ____ Final x

I. Introduction

Two stack gas samples which had been collected by the "isokinetic method" on June 22, 1971 were submitted for analysis.

The basic procedure was the quantitative recovery of the organic condensate and its gravimetric measurement. However, this was complicated by the size and intricacy of the collection device. Separation from a relatively large amount of water was also required.

The gases emerging at the outlet of the isokinetic train were also sampled. They have been analyzed and reported separately (PML 71-223, 7/29/71). The organic contents have been adjusted on a volume basis and are included in the data of this report.

II. Condensate Recovery

The collection of condensate from the isokinetic apparatus was accomplished in five steps:

Form 111

1. The impinger train was back-flushed with N_2 for approximately 24 hours into large liquid nitrogen cooled traps. After warming to ambient temperature, the trapped material proved to be mostly water with a thin immiscible oil layer. An effort to segregate the oil by vacuum transfer was not effective. The separation was accomplished by ether extraction.

2. The probes were flushed with N_2 into small, tared, liquid nitrogen cooled traps. Toward the end of the flush, the probes were heated with their own heating coils.

3. After the probes had cooled, they were flushed with ether.

4. The glass wool plugs were removed from the impinger trains, after which the trains were back-flushed with ether.

5. The glass wool plugs were extracted with ether in a Soxhlet apparatus.

The weight of the recovered fractions after ether removal is shown in Table I.

Table I

Procedure	Sample 1	Sample 2
N_2-flush of impingers,		
Water, g.	12.412	12.020
Organics, g.	0.1266	0.1435
N_2-flush of probes, g.	0.0177	0.0317
Ether rinse of probes, g.	0.0091	0.0233
Ether rinse of traps, g.	0.0775	0.1548
Ether extraction of plugs, g.	0.0327	0.1203
Total organics, g.	0.2636	0.4736

The organic content of the gas samples taken of the effluent from the impinger train indicate that 0.0641 g. and 0.0357 g. of organic carbon content should be added to Samples 1 and 2 respectively.

R. J. Reitz
Senior Fellow
Physical Measurements Laboratory

RJR:jdf

Approved_____

CARNEGIE-MELLON UNIVERSITY

MELLON INSTITUTE

RESEARCH SERVICES

Physical Measurements Laboratory (7615-2)

Fellow Dr. W. J. Green

Account No. Graphic Arts Technical Foundation P.O. #3104

Investigation Analyses of Samples from the Exit of the Isokinetic Train

Investigation No. PML 71-223

Date of Report July 29, 1971

NATURE OF REPORT: Preliminary ____ Progress ____ Final x

This report presents the analyses of two stack gas samples which were collected at the exit port of the isokinetic sampling train. Thus they represent material which has escaped condensation in the isokinetic train.

Isokinetic Sample No.	1	2
Cylinder No.	4	20
Sample volume, cc NTP	264.9	266.5
Content, v/v % as CO_2		
Carbon monoxide	0.00	0.00
Carbon dioxide	0.5093	0.4879
Methane	0.0016	0.0016
Cyl. organics	0.0009	0.0012
Trap organics	0.0203	0.0072

Paul R. Eisaman
Fellow
Physical Measurements Laboratory

PRE:jdf

RUN #1

1. Volume of dry gas sampled at standard conditions[a], DSCF

$$V_{m_{std}} = \frac{17.7 \times V_m \left(P_b + \frac{P_m}{13.6}\right)}{(T_m + 460)} = \frac{17.7 \times 20.2 \left(29.00 + \frac{0}{13.6}\right)}{(98 + 460)} = 18.57 \text{ DSCF}$$

2. Percent moisture in stack gas assumed 3%.

3. Mole fraction of dry gas

$$M_d = \frac{100 - \% M}{100} = \frac{100 - 3\%}{100} = 0.97$$

4. Molecular weight of dry stack gas assumed 29.0

5. Molecular weight of wet stack gas

$$MW = MW_d \times M_d + 18 (1 - M_d) = 29.0 \times 0.97 + 18 (1 - 0.97) = 28.7$$

6. Stack gas velocity at stack conditions, fpm[b]

$$V_s = 4{,}360 \times \sqrt{\Delta P_s \times (T_s + 460)} \quad \frac{1}{P_s \times MW}^{1/2} =$$

$$4{,}360 \times 17.4 \quad \frac{1}{29.37 \times 28.7}^{1/2} = 2630 \text{ fpm}$$

7. Percent isokinetic

$$\%I = \frac{1{,}032 \times (T_s + 460) \times V_{m_{std}}}{V_x \times T_t \times P_s \times M_d \times (D_n)^2} = \frac{1{,}032 \times (270 + 460) \times 18.57}{2{,}630 \times 48 \times 29.37 \times 0.97 \times (0.193)^2} = 104.4$$

[a] Dry standard cubic feet at 70°F, 29.92 in. Hg.

[b] $\sqrt{\Delta P_s \times (T_s + 460)}$ is determined by averaging the square root of the product of the velocity head (ΔPs) and the absolute stack temperature from each sampling point.

RUN # 2

1. Volume of dry gas sampled at standard conditions[a], DSCF

$$V_{m_{std}} = \frac{17.7 \times V_m \left(P_b + \frac{P_m}{13.6}\right)}{(T_m + 460)} = \frac{17.7 \times 24.29 \left(29.00 + \frac{0}{13.6}\right)}{(105 + 460)} = 22.01 \text{ DSCF}$$

2. Percent moisture in stack gas assumed 3%.

3. Mole fraction of dry gas

$$M_d = \frac{100 - \% M}{100} = \frac{100 - 3}{100} = 0.97$$

4. Molecular weight of dry stack gas assumed 29.0

5. Molecular weight of wet stack gas

$$MW = MW_d \times M_d + 18 (1 - M_d) = 29.0 \times 0.97 + 18 (1 - 0.97) = 28.7$$

6. Stack gas velocity at stack conditions, fpm[b]

$$V_s = 4{,}360 \times \sqrt{\Delta P_s \times (T_s + 460)} \quad \frac{1}{P_s \times MW}^{1/2} =$$

$$4{,}360 \times 16.8 \quad \frac{1}{29.37 \times 28.7}^{1/2} = 2{,}532 \text{ fpm}$$

7. Percent isokinetic

$$\%I = \frac{1{,}032 \times (T_s + 460) \times V_{m_{std}}}{V_s \times T_t \times P_s \times M_d \times (D_n)^2} = \frac{1{,}032 \times (270 + 460) \times 22.01}{2{,}532 \times 59.2 \times 29.37 \times 0.97 \times (0.193)^2} = 104.3$$

[a] Dry standard cubic feet at 70°F, 29.92 in. Hg.

[b] $\sqrt{\Delta P_s \times (T_s + 460)}$ is determined by averaging the square root of the product of the velocity head (ΔPs) and the absolute stack temperature from each sampling point.

NOMENCLATURE

D_n	Sampling Nozzle Diameter, in.
T_t	Net Time of Test, Min.
P_b	Barometric Pressure, in. Hg Absolute
V_m	Volume of Dry Gas Sampled at Meter Conditions, DCF
T_m	Average Gas Meter Temperature, °F
$V_{m_{std}}$	Volume of Dry Gas Sampled at Standard Conditions[a], DSCF
% M	% Moisture in Stack Gas, by Volume
M_d	Mole Fraction of Dry Gas
MW_d	Molecular Weight of Stack Gas, Dry Basis
MW	Molecular Weight of Stack Gas, Wet Basis
T_s	Average Stack Temperature °F
P_s	Stack Gas Pressure, in. Hg Absolute
V_s	Stack Gas Velocity at Stack Conditions, fpm
% I	Percent Isokinetic

Plant

Test No. 1

Location

Date 23 JUN 71

Operator McCARLEY

Sample Box No. X 4

Meter Box No. 8

Meter ΔH@ 1.94

C Factor 1.00

PARTICULATE FIELD DATA

Read and record at the start of each test point.

Mandatory readings: read and record every 5 minutes.

STACK PRES ~ 5" H_2O

Ambient Temp °F 80

Bar. Press. "Hg 29.00

Assumed Moisture % 3

Nozzle Dia., In. 0.193

Probe Length 5'1"

Probe Heater Setting —

Avg. ΔP 0.5 Avg. ΔH 2.0

NO FLOW
sample box tipped (impinger tip) at 457.47
(began @ 457.301)

Point	Clock Time	Dry Meter Reading, Cf	Stack Temp. °F	Orifice ΔH in. H_2O Desired	Actual	Dry Gas Temp. °F Meter	Inlet	Pump Vacuum In. Hg Range	Box Temp °F	Impinger Temp °F	Stack Press In. Hg	Probe Temp °F
1A	0	[illegible]	.36	.66	.66	91	88	0	—	—	—	270
2A	4	460.[illegible]	.36	.43	.43	99	89	0	—	—	—	270
3A	8	462.340	.30	.36	.36	96	90	0	—	—	—	270
4A	12	463.830	.36	.43	.43	98	91	0	—	—	—	270
*5A	16	464.320	.45	.54	.54	104	97	0	—	—	—	270
6A	20	464.820	.60	.70	.70	104	97	0	—	—	—	270
1B	24	468.979	.42	.50	.50	102	100	0	—	—	—	270
2B	28	470.990	.29	.35	.35	102	100	0	—	—	—	270
3B	32	471.180	.27	.32	.32	102	100	0	—	—	—	270
4B	36	473.460	.46	.55	.55	104	100	0	—	—	—	270
5B	40	475.160	.48	.68	.68	102	100	1	—	—	—	270
6B	44	476.840	.67	.80	.80	102	100	0	—	—	—	270
	48	479.004										

SHUT DOWN @ 7AM 25 sec. FLOW 479.490

Comments:

VACUUM on GATE BOOM - (#4) 27 in.

Flowmeter 465.282

SHUT DOWN AT 15 min 50 sec for changing paper

Operator error. Vac = 0 and ΔH increased (Input 2 of 3 impinger tubes)

Moved SHUT FOR LUNCH @ END of 6A

VRC - McGAIT [illegible] - 24"

(#20) ST PR. ~ 5" H_2O

PARTICULATE FIELD DATA

Plant

Run No. 2

Location

Date 23 JUN 71

Operator McCARLEY

Sample Box No. 1

Meter Box No 8

Meter Δ H 1.94

C Factor 1.00

VERY IMPORTANT - FILL IN ALL BLANKS

Read and record at the start of each test point.

PATHOLOGICAL INCIDENTS-
read and record every 5 minutes.

Ambient Temp °F 85

Bar. Press. "Hg 29.00

Assumed Moisture % 3

Heater Box Setting, °F —

Probe Tip Dia., In. 0.193

Probe Length 31"

Probe Heater Setting —

Pitot Coef. P 0.85 Pit. 0.6

SHUT DOWN 3 MIN CLOSE FLOW 480-81

Point	Clock Time	Dry Gas Meter, CF	Pitot In. H_2O ΔP	Orifice ΔH In. H_2O Desired	Orifice ΔH In. H_2O Actual	Dry Gas Temp. °F In	Dry Gas Temp. °F Out	Probe Vacuum In. Hg	Box Temp. °F	Impinger Temp °F	Stack Press. In. Hg	Stack Temp °F
1A	0	479.027	.50	.60	.60	102	101	0	—	—	—	270
2A	4 5	481.32	.39	.47	.47	102	102	0	—	—	—	270
3A	8 10	483.375	.28	.33	.33	105	102	0	—	—	—	270
4A	12 15	485.100	.33	.40	.40	106	103	0	—	—	—	270
5A	16 20	487.00	.51	.61	.61	108	104	0	—	—	—	270
6A	20 25	489.261	.55	.66	.66	110	104	0	—	—	—	270
1B	24 30	491.629	.35	.42	.42	111	105	0	—	—	—	270
2B	28 35	493.590	.24	.29	.29	111	106	0	—	—	—	270
3B	2 10	495.500	.23	.27	.27	112	108	0	—	—	—	270
4B	6 15	497.170	.41	.49	.49	112	108	0	—	—	—	270
5B	10 20	499.205	.45	.53	.53	113	109	6.0	—	—	—	270
6B	14 20	501.40	.61	.72	.72	116	110	6.0	—	—	—	270
	18 X	503.315	29 min	10 sec.								

rapid steady rise in vacuum with steady decrease in sample flow, could not maintain isokinetic conditions so shut down.

Comments:

NCAP-37 (12/67)

Approved

CARNEGIE-MELLON UNIVERSITY

MELLON INSTITUTE

RESEARCH SERVICES

Physical Measurements Laboratory (7615-2)

Fellow Dr. W. J. Green

Account No. Graphic Arts Technical Foundation 3104

Investigation Analyses of Stack Gas Samples

Investigation No. PML 71-222

Date of Report July 29, 1971

NATURE OF REPORT: Preliminary ____ Progress ____ Final x

This report presents the analyses of five stack gas samples which were collected during the time period in which the isokinetic samples were obtained.

Date	6-23-71	6-23-71	6-23-71	6-24-71	6-24-71
Cylinder No.	5	7	11 (Note1)	1	18
Sample volume, cc. NTP	249.2	255.7	239.1	268.3	254.6
Content, v/v % as CO_2					
Carbon monoxide	0.00	0.00	0.00	0.00	0.00
Carbon dioxide	0.4906	0.2848	0.4587	0.4198	0.4993
Methane	0.0017	0.0009	0.0017	0.0015	0.0018
Cyl. organics	0.0010	0.0007	0.0015	0.0011	0.0012
Trap organics	0.2012	0.2641	0.1429	0.2194	0.2692

Note 1: The trap organic content is a minimum value; the analysis was interrupted by an electrical power failure.

PRE:jdf

Paul R. Eisaman for BMR

Paul R. Eisaman
Fellow
Physical Measurements Laboratory

Form 111

Approved

CARNEGIE-MELLON UNIVERSITY

MELLON INSTITUTE

RESEARCH SERVICES

Physical Measurements Laboratory (7615-2)

Fellow Dr. William Green (2)

Account No. Graphic Arts Technical Foundation P.O. #3104

Investigation Air Pollution Program

Investigation No. PML 71-232 (Gradient Study)

Date of Report October 25, 1971

NATURE OF REPORT: Preliminary ____ Progress ____ Final x

The six samples of stack gas effluent which you submitted have been analyzed by the procedure described in a previous report dated October 2, 1970.

Cylinder No.	12	19	29	30	31	32
Sample Volume, cc NTP	277	267	261	269	266	258
Content, v/v % as CO_2						
Carbon Monoxide	---	---	trace	trace	trace	---
Carbon Dioxide	0.1476	0.0749	0.4675	0.5262	0.5500	0.5220
Methane	0.0019	0.0015	0.0025	0.0026	0.0026	0.0025
Organics	0.0003	0.0001	0.0012	0.0012	0.0012	0.0013
Traps	0.0150	0.0025	0.0836	0.0960	0.0885	0.0890

Paul R. Eisaman
Fellow
Physical Measurements Laboratory

PRE: jdf

R&T: 10/29/71

Form 111

Data Sheet #5-ECD

Test No.: Gradient Study
Plant Code No.: _____
Sampling Location
4-color, 1-web
Perfecting

Graphic Arts Technical Foundation
Environmental Control Division
Research Department
Pittsburgh, Pennsylvania 15213

Date: 10/11/71
GATF Personnel:
R. R. Gadomski
W. J. Green

Gas Velocity Data

Point No.	Time: 9:00-9:15 am			Time: 9:15-9:30 am		
	Vel. Head in. H_2O (h)	Temp °F	Velocity ft/sec	Vel. Head in. H_2O (h)	Temp °F	Velocity ft/sec
A-1	.40	260	49.3	B-1 .20	260	34.8
A-2	.32	260	44.1	B-2 .24	260	38.3
A-3	.27	260	46.3	B-3 .25	260	38.9
(center)A-4	.22	260	46.3	B-4 .28	260	41.5
A-5	.15	260	39.6	B-5 .28	260	41.5
A-6	.12	260	26.7	B-6 .25	260	38.9
A-7	.12	260	26.7	B-7 .20	260	34.8
Av.		260	36.7		260	38.3

A. Av. velocity (traverse) ft/sec 37.5
B. Av. velocity (ref. pt.) ft/sec N/A
C. Flue factor A/B None
D. Pitot Tube correction factor (if any) None
E. Gas density factory (ref. to air) 1.0
F. Corrected velocity B x C x D x E ft/sec 37.5
G. Area of flue, sq. ft. 5.30
H. Av. flue temp. °F 260
I. Flow rate @ stack cond.
F x G x 60, acfm 11900
J. P_s = 29.33
K. Corrected to std. cond.
Flow rate = $\frac{520 \times I \times P_s}{H + 460 \times 29.92}$, scfm 8500

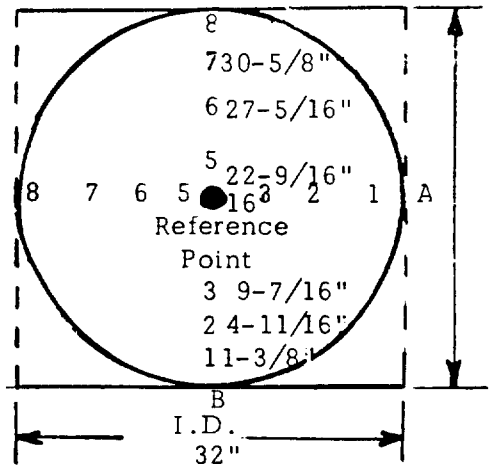

Static (ΔH) "H_2O = 4.0
P_g = - ΔH/13.6 = 0.30
P_{atm} "Hg = 29.63
$P_s = P_{atm} - P_g$ = 29.63-.30=29.33

Approved 3MR

CARNEGIE-MELLON UNIVERSITY

MELLON INSTITUTE

RESEARCH SERVICES

Physical Measurements Laboratory (7615-2)

Fellow Mr. Ray Gadomski

Account No. Graphic Arts Technical Foundation P.O. #3104

Investigation Test for Condensates in GATF Sample Cylinders

Investigation No. PML 72-230

Date of Report August 22, 1972

NATURE OF REPORT: Preliminary ____ Progress ____ Final x

Mr. A. Gimbrone has requested a study be made to determine the possibility of high boiling material passing through the trap into the cylinder portion of the "GATF Stack Gas Sampling Apparatus". If this did occur, the analysis of the cylinder organics would be too low as this portion of the analysis is made at ambient temperature.

Since the cylinder section of the sampling train was purchased and assembled by GATF personnel, the history before the calibration of this apparatus is not known to us. All cylinders were calibrated using pure helium or nitrogen gas. The cylinders were cleaned by the Physical Measurements Laboratory as described in report number PML 72-14. This cleaning procedure was repeated after the completion of each field test analysis.

To concur with the request, a device was designed and constructed which provided a stream of helium gas to purge the cylinder sample gas, at a set rate, into the hydrogen flame detector. This was accomplished by removing the "Ideal" value assembly and substituting a new flow device. This assembly was attached to the gas chromatograph with copper tubing. The first portion of the experiment was conducted at ambient temperature during which the hydrogen flame response is due to the non-condensibles. After the non-condensible hydrocarbon concentration dropped below the

Form 111

minimum detection level of the hydrogen flame detector, the cylinder was temperature programmed at 6°C./min. from ambient temperature to 200°C. The hydrogen flame response was designated as high boiling or condensible material.

Using cylinder No. 44 data as a typical analysis, the following information was recorded. After the helium flow was started, the hydrogen flame response was rapid and reached a maximum value at 1 min. followed by a steady decrease in response for 32 minutes. This response represents the non-condensible fraction of the cylinder sample. The temperature program (6°C./min.) was started at 36 min. and continued until a maximum temperature of 200°C. was reached. The detector response started to increase at approximately 60°C. and reached a maximum at 68 minutes.

An arbitrary selection of cylinders was made and the usage history of each is indicated in Table I. Cylinder Nos. 43 and 44 were each used in two field tests; No. 293 was used in one field test; and No. 301 was unused. Cylinder Nos. 293 and 301 were cleaned with trichloroethylene by GATF personnel.

Table I

Cylinder No.	PML No. for Last Field Test	No. of Times Used for Field Test	Methane + Organics Reported by PML, ppm
43	72-227	2	145
44	72-227	2	117
293	72-225	1	74
301	---	0	0

The results of the analysis are tabulated in Table II. The non-condensibles are reported as "ppm as CO_2" using the corrected volume of the sample gas present in the cylinder at the time of the analysis. The high boiling organics are reported as the equivalent of n-heptane which would be present as liquid in the cylinder section of the sampling train.

Table II

Cylinder No.	Non-Condensibles, ppm as CO_2	High Boiling Organics, ml. as n-heptane
43	84	0.0014
44	89	0.0015
293	56	0.0006
301	0	0.0019

An exact material balance between the two analyses cannot be expected. The hydrogen flame response is related to the composition of the gas stream. In a normal analysis, the hydrogen flame responds to helium carrier plus pure organics. In these analyses, the hydrogen flame responds to helium carrier plus a mixture of inorganics and organics which alter the flame sensitivity. Some loss is also expected when changing the cylinder configuration to accommodate the purging device and the connectors to the gas chromatographic unit.

The high boiling organics or cylinder residue has a low vapor pressure at ambient temperature since it is not substantially removed by evacuation at pressures less than one micron. The presence of this residue would not contribute to the previous values reported for the cylinder analyses.

Paul R. Eisaman
Fellow
Physical Measurements Laboratory

PRE:jdf

Approved

FEB 26 1971

GATF

CARNEGIE-MELLON UNIVERSITY

MELLON INSTITUTE

RESEARCH SERVICES

Physical Measurements Laboratory (7615-2)

Fellow Dr. Wm. J. Green

Account No. 3104 Graphic Arts Technical Foundation

Investigation Calibration of Gas Sampling Cylinders

Investigation No. PML 71-2

Date of Report February 16, 1971

NATURE OF REPORT: Preliminary ____ Progress ____ Final xx

The geometric volumes of five gas sampling cylinders have been measured.

The measurements were made with a quantitative gas manipulation system with which nitrogen was expanded into the sampling cylinder from two calibrated cylinders.

The volumes of the cylinders are:

No. 1	305 ml.
No. 2	313 ml.
No. 3	304 ml.
No. 4	309 ml.
No. 5	304 ml.

V. Colaluca
Research Assistant

R. J. Reitz
Senior Fellow
Physical Measurements Laboratory

RJR:jdf

Form 111

Approved

CARNEGIE-MELLON UNIVERSITY

MELLON INSTITUTE

RESEARCH SERVICES

APR 2 - 1971

GATF

Physical Measurements Laboratory (7615-2)

Fellow Dr. William J. Green

Account No. Graphic Arts Technical Foundation #3104

Investigation Calibration of Gas Sampling Cylinders

Investigation No. PML 71-7

Date of Report March 30, 1971

NATURE OF REPORT: Preliminary ____ Progress ____ Final xx

The geometric volumes of six gas sampling cylinders have been measured.

The measurements were made with a quantitative gas manipulation system with which nitrogen was expanded into the sampling cylinder from two calibrated cylinders.

The volumes of the cylinders are:

No. 6*	312 ml.
No. 7	307 ml.
No. 8	309 ml.
No. 9	311 ml.
No. 10	311 ml.
No. 11	312 ml.
No. 12	312 ml.

*Previously calibrated on May 23, 1970.

V. Colaluca
Research Assistant
Physical Measurements Laboratory

VC:jdf

Form 111

Approved 1-3 MR

CARNEGIE-MELLON UNIVERSITY

MELLON INSTITUTE

RESEARCH SERVICES

Physical Measurements Laboratory (7615-2)

Fellow: Dr. William J. Green

Account No.: Graphic Arts ~~Technical Foundation~~ #3104

Investigation: Calibration of Gas Sampling Cylinders

Investigation No.: PML 71-9

Date of Report: April 8, 1971

NATURE OF REPORT: Preliminary ____ Progress ____ Final xx

The geometric volumes of the two gas sampling cylinders have been measured.

The measurements were made with a quantitative gas manipulating system with which nitrogen was expanded into the sampling cylinder from two calibrated cylinders.

The volumes of the cylinders are:

No. 13	313 ml.
No. 14	311 ml.

Val G. Colaluca
Research Assistant
Physical Measurements Laboratory

VGC:jdf

APR 13 1971
GATF

Form 111

Approved ZMR

MAY 11 1971

CARNEGIE-MELLON UNIVERSITY

MELLON INSTITUTE

RESEARCH SERVICES

Physical Measurements Laboratory (7615-2)

Fellow Dr. William J. Green

Account No. Graphic Arts Technical Foundation #3104

Investigation Calibration of Gas Sampling Cylinders

Investigation No. PML 71-10

Date of Report May 5, 1971

NATURE OF REPORT: Preliminary ____ Progress ____ Final xx

The geometric volumes of the ten gas sampling cylinders have been measured.

The measurements were made with a quantitative gas manipulating system with which nitrogen was expanded into the sampling cylinder from two calibrated cylinders.

The volumes of the cylinders are:

No. 15	312 ml.
No. 16	310 ml.
No. 17	309 ml.
No. 18	311 ml.
No. 19	307 ml.
No. 20	313 ml.
No. 21	321 ml.
No. 22	316 ml.
No. 23	308 ml.
No. 24	311 ml.

Val G. Colaluca
Research Assistant
Physical Measurements Laboratory

VGC:jdf

Form 111

Approved

CARNEGIE-MELLON UNIVERSITY

MELLON INSTITUTE

RESEARCH SERVICES

OCT 5 - 1971

GATF

Physical Measurements Laboratory (7615-2)

Fellow Dr. William J. Green (2)

Account No. Graphic Arts Technical Foundation 3104

Investigation Calibration of Gas Sampling Cylinders

Investigation No. PML 71-38

Date of Report September 23, 1971

NATURE OF REPORT: Preliminary ____ Progress ____ Final x

The geometric volumes of eight gas sampling cylinders have been measured.

The measurements were made with a quantitative gas manipulation system with which nitrogen was expanded into the sampling cylinder from two calibrated cylinders.

The volumes of the cylinders are:

No.	ml.
25	313
26	305
27	305
28	309
29	309
30	308
31	303
32	308

Val G. Colaluca
Research Assistant
Physical Measurements Laboratory

VGC:jdf

R&T: 9/29/71

Form 111

BIBLIOGRAPHIC DATA SHEET	1. Report No. APTD-1463	2.	3. Recipient's Accession No.

4. Title and Subtitle
Evaluation of Emissions and Control Technologies in the Graphic Arts Industries - Phase II: Web Offset and Metal Decorating Processes

5. Report Date
Approval - May 1973

6.

7. Author(s) R.R. Gadomski, A.V. Gimbrone, Mary P. David and W.J. Green

8. Performing Organization Rept. No.

9. Performing Organization Name and Address
Graphic Arts Technical Foundation
4615 Forbes Avenue
Pittsburgh, Pennsylvania 15213

10. Project/Task/Work Unit No.

11. Contract/Grant No.
68-02-0001

12. Sponsoring Organization Name and Address
EPA, Office of Air Quality, Planning & Standards
Industrial Studies Branch
Research Triangle Park, North Carolina 27711

13. Type of Report & Period Covered
Final Report

14.

15. Supplementary Notes

16. Abstracts

Total organics, carbon dioxide, carbon monoxide and methane emissions were measured from offset printing and metal decorating operations. A reliable yet simple grab sampling method was developed along with the appropriate analytical technique, which uses gas chromatography and a flame ionization detector. The effects of plant process variables on emissions were evaluated and equations based on operating parameters such as press speed, ink coverage, solvent content, dryer type, sheet size, and coating thickness were then developed to calculate emission rates. These equations can provide rough estimates of actual emissions. Test results are presented for web offset and metal decorating operations using both catalytic and thermal afterburners over a range of incineration temperatures. Uncontrolled process emissions are also presented. Recent developments and changes being investigated within the industry for reducing air pollution, including process modifications, are discussed in the report to the extent that information was available.

17. Key Words and Document Analysis. 17a. Descriptors

Air Pollution
Offset Printing
Metal Decorating
Graphic Arts
Stack Sampling
Gas Sampling
Gas Analysis
Hydrocarbons - total
Organics - total
Solvent Emissions
Air Pollution Control Equipment
Catalytic Afterburner
Thermal Afterburner

17b. Identifiers/Open-Ended Terms

17c. COSATI Field/Group 13B

18. Availability Statement	19. Security Class (This Report)	21. No. of Pages
Release Unlimited	UNCLASSIFIED	532
	20. Security Class (This Page) UNCLASSIFIED	22. Price

FORM NTIS-35 (REV. 3-72)

USCOMM-DC 14952-P72