Note: This is a reference cited in *AP 42, Compilation of Air Pollutant Emission Factors, Volume I Stationary Point and Area Sources.* AP42 is located on the EPA web site at www.epa.gov/ttn/chief/ap42/

The file name refers to the reference number, the AP42 chapter and section. The file name "ref02_c01s02.pdf" would mean the reference is from AP42 chapter 1 section 2. The reference may be from a previous version of the section and no longer cited. The primary source should always be checked.

MAGNET WIRE
COATING
AP-42
Section 4.2.2.2
Reference Number
2

Stationary Source Enforcement Series

CONTROLLED AND UNCONTROLLED EMISSION RATES AND APPLICABLE LIMITATIONS FOR EIGHTY PROCESSES

EPA-340/1-78-004
April 1978 (Second Printing)

U.S. ENVIRONMENTAL PROTECTION AGENCY
OFFICE OF ENFORCEMENT
OFFICE OF GENERAL ENFORCEMENT
WASHINGTON, D.C. 20460

EPA-340/1-78-004

CONTROLLED AND UNCONTROLLED EMISSION RATES AND APPLICABLE LIMITATIONS FOR EIGHTY PROCESSES

by

Peter N. Formica

TRC - The Research Corporation of New England
125 Silas Deane Highway
Wethersfield, Connecticut 06109

Contract No. 68-02-1382
Task Order No. 12

EPA Project Officer: Robert Schell

Division of Stationary Source Enforcement

Prepared for

U.S. ENVIRONMENTAL PROTECTION AGENCY
Division of Stationary Source Enforcement
Research Triangle Park, North Carolina 27711

April 1978

STATIONARY SOURCE ENFORCEMENT SERIES

The Stationary Source Enforcement series of reports is issued by the Office of General Enforcement, Environmental Protection Agency, to assist the Regional Offices in activities related to enforcement of implementation plans, new source emission standards, and hazardous emission standards to be developed under the Clean Air Act. Copies of Stationary Source Enforcement reports are available - as supplies permit - from the U.S. Environmental Protection Agency, Office of Administration, Library Services, MD-35, Research Triangle Park, North Carolina 27711, or may be obtained, for a nominal cost, from the National Technical Information Service, 5285 Port Royal Road, Springfield, Virginia 22161.

REVIEW NOTICE

This report has been reviewed by the Division of Stationary Source Enforcement and approved for publication. Approval does not signify that the contents necessarily reflect the views and policies of the Environmental Protection Agency, nor does mention of trade names or commercial products constitute endorsement or recommendation for use.

TABLE OF CONTENTS

SECTION		PAGE
1.0	SUMMARY	1
2.0	INTRODUCTION	3
3.0	CONCLUSIONS AND DISCUSSION	6
I	External Combustion	I - 1-17
	Wood Waste Boilers	I-1
	Boilers .3-10 × 10^6 BTU/hr	I-4
	Boilers 10-250 × 10^6 BTU/hr	I-8
	Boilers >250 × 10^6 BTU/hr	I-13
II	Solid Waste Disposal	II - 1-14
	Open Burning (Agricultural)	II-1
	Industrial/Commercial Incinerators	II-3
	Municipal Incinerators	II-9
IV	Evaporation Losses	IV - 1-94
	Degreasing	IV-1
	Dry Cleaning	IV-6
	Petroleum Refueling of Motor Vehicles	IV-11
	Graphic Arts (Gravure)	IV-16
	Graphic Arts (Letterpress)	IV-25
	Graphic Arts (Metal Coating)	IV-35
	Graphic Arts (Lithography)	IV-43
	Graphic Arts (Flexography)	IV-53
	Industrial Surface Coating	IV-63
	Petroleum Storage Gasoline (Breathing)	IV-76
	Petroleum Storage Gasoline (Working)	IV-81
	Petroleum Transfer Gasoline	IV-86
	Petroleum Service Stations	IV-90
V	Chemical Process Industry	V - 1-68
	Acrylonitrile	V-1
	Ammonia (Methanator Plant)	V-5
	Ammonia (Regenerator and CO Absorber Plants)	V-9
	Carbon Black	V-13
	Charcoal	V-19
	Ethylene Dichloride	V-23
	Ethylene Oxide	V-27
	Formaldehyde	V-30
	Paint	V-34
	Phthalic Anhydride	V-39
	Polyethylene (High Density)	V-43
	Polyethylene (Low Density)	V-47
	Polystyrene	V-51
	Printing Ink	V-55
	Synthetic Fibers (Nylon)	V-59
	Varnish	V-62
	Synthetic Resins (Phenolic)	V-66

TABLE OF CONTENTS (CONTINUED)

SECTION		PAGE
VI	Food and Agricultural Industry	VI - 1-54
	Beer Processing	VI-1
	Cotton Ginning	VI-5
	Deep Fat Frying	VI-11
	Direct Firing of Meats	VI-16
	Feed Milling (Excluding Alfalfa)	VI-19
	Fertilizer - Ammonium Sulfate	VI-23
	Fertilizer - Ammonium Nitrate	VI-27
	Grain - Drying	VI-32
	Drain - Processing	VI-37
	Grain - Screening and Cleaning	VI-42
	Vegetable Oil Manufacturing	VI-46
VII	Metallurgical Industry	VII - 1-64
	Cast Iron Foundries (Electric Furnace)	VII-1
	Cast Iron Foundries (Cupola Furnace)	VII-7
	Cast Iron Foundries (Core Ovens)	VII-14
	Iron and Steel Plants (Electric Arc Furnace)	VII-20
	Iron and Steel Plants (Scarfing)	VII-27
	Iron and Steel Plants (Sintering)	VII-31
	Iron and Steel Plants (Open-Hearth Furnace)	VII-37
	Primary Copper	VII-42
	Steel Foundries (Secondary)	VII-49
	Ferroalloy	VII-54
	Primary Aluminum	VII-60
VIII	Mineral Products Industry	VIII - 1-58
	Asphalt Batching	VIII-1
	Asphalt Roofing (Blowing)	VIII-6
	Brick and Related Clay Products	VIII-10
	Cement Plants	VIII-14
	Coal Cleaning (Thermal Drying)	VIII-20
	Concrete Batching	VIII-26
	Glass Wool Production (Soda Lime)	VIII-30
	Gypsum	VIII-34
	Mineral Wool	VIII-38
	Phosphate Rock (Drying)	VIII-42
	Phosphate Rock (Grinding)	VIII-46
	Sand and Gravel Processing	VIII-50
	Stone Quarrying	VIII-54
IX	Petroleum Industry	IX - 1-4
	Petroleum Refining, Fluid Catalytic Cracking Unit (FCCU)	IX-1
X	Wood Processing	X - 1-6
	Wood Processing (Plywood)	X-1
XI	Manufacturing	XI - 1-3
	Automobile Assembly Plant	XI-1

LIST OF TABLES

		PAGE
I	External Combustion	
	Wood Waste Boilers	
Table I-1	Wood Waste Boiler Particulate Emissions	I-1
Table I-2	Particulate Emissions and Limitations from Wood Waste Boilers	I-2
	Boilers .3-10 × 10^6 BTU/hr	
Table I-3	Classification and Capacity of Cast Iron and Firetube Boilers	I-4
Table I-3A	Particulate Emissions from .3-10 × 10^6 BTU/hr Boilers	I-5
Table I-4	Particulate Emissions and Limitations from .3-10 × 10^6 BTU/Boilers	I-6
Table I-4A	Compilation of Control Requirements for Boilers .3-10 × 10^6 BTU/hr	I-7
	Boilers 10-250 × 10^6 BTU/hr	
Table I-5	Classification and Capacity of Water Tube Boilers	I-8
Table I-5A	Particulate Emissions from 10-250 × 10^6 BTU/hr Boilers	I-9
Table I-6	Particulate Emissions and Limitations from Boilers 10-250 × 10^6 BTU/hr	I-10
Table I-6A	Compilation of Control Requirements for Boilers 10-250 × 10^6 BTU/hr	I-11
	Boilers >250 × 10^6 BTU/hr	
Table I-7	Classification and Capacity of Water Tube Boilers	I-13
Table I-7A	Particulate Emissions from >250 × 10^6 BTU/hr Boilers	I-14
Table I-8	Particulate Emissions and Limitations from Boilers >250 × 10^6 BTU/hr	I-15
Table I-8A	Compilation of Control Requirements for Boilers >250 × 10^6 BTU/hr	I-16
II	Solid Waste Disposal	
	Open Burning (Agricultural)	
Table II-1	Hydrocarbon Emissions from Agricultural Burning	II-1
	Industrial/Commercial Incinerators	
Table II-5	Particulate Emissions from Industrial/Commercial Incinerators	II-5
Table II-6	States Having Regulations for New and Existing Sources on a Concentration Basis	II-7
	Municipal Incinerators	
Table II-7	Particulate Emissions from Municipal Incinerators	II-11
Table II-8	States Having Regulations for New and Existing Sources on a Concentration Basis	II-13
IV	Evaporation Losses	
	Degreasing	
Table IV-1	Hydrocarbon Emissions from Degreasing Operations	IV-3
Table IV-2	Hydrocarbon Emissions and Limitations from Degreasing	IV-4

LIST OF TABLES (CONTINUED)

		PAGE
	Dry Cleaning	
Table IV-3	Property of Dry Cleaning Solvents	IV-7
Table IV-3A	Hydrocarbon Emissions from Dry Cleaning Using Synthetic Solvents	IV-8
	Petroleum Refueling of Motor Vehicles	
Table IV-5	Hydrocarbon Emissions from Refueling Vehicle Tanks	IV-11
	Graphic Arts (Gravure)	
Table IV-7	Volume Breakdown of Solvent Consumed for Ink Dilution by Printing Process and Solvent Type (1968)	IV-18
Table IV-7A	Hydrocarbon Emissions from Gravure Printing	IV-19
Table IV-8	Hydrocarbon Emissions and Limitations from Rotogravure Printing	IV-23
	Graphic Arts (Letterpress)	
Table VI-9	Volume Breakdown of Solvent Consumed for Ink Dilution by Printing Process and Solvent Type (1968)	IV-27
Table IV-9A	Hydrocarbon Emissions from Letterpress Publication Printing	IV-29
Table IV-10	Hydrocarbon Emissions and Limitations from Letterpress Printing	IV-33
	Graphic Arts (Metal Coating)	
Table IV-11	Hydrocarbon Emissions from Metal Decorating	IV-37
Table IV-12	Hydrocarbon Emissions and Limitations from Metal Decorating	IV-41
	Graphic Arts (Lithography)	
Table IV-13	Volume Breakdown of Solvent Consumed for Ink Dilution by Printing Process and Solvent Type	IV-45
Table IV-13A	Hydrocarbon Emissions from Web-Offset Printing	IV-46
Table IV-14	Hydrocarbon Emissions and Limitations from Web-Offset Printing	IV-51
	Graphic Arts (Flexography)	
Table IV-15	Volume Breakdown of Solvent Consumed for Ink Dilution by Printing Process and Solvent Type (1968)	IV-55
Table IV-15A	Hydrocarbon Emissions from Flexographic Publication Printing	IV-57
Table IV-16	Hydrocarbon Emissions and Limitations from Flexographic Printing	IV-61
	Industrial Surface Coating	
Table IV-17	Solvent Species in Emitted Hydrocarbons	IV-64
Table IV-17A	Examples of Surface Coating and Added Thinner Formulas on as As-Purchased Basis Having Conforming Solvent Systems	IV-65
Table IV-17B	Hydrocarbon Emissions from Industrial Surface Coating	IV-68
Table IV-18	Hydrocarbon Emissions and Limitations for Industrial Surface Coating	IV-74
	Petroleum Storage Gasoline (Breathing)	
Table IV-19	Hydrocarbon Breathing Emissions from Gasoline Storage Tanks	IV-78
Table IV-20	Hydrocarbon Emissions and Limitations for Breathing Losses from Storage Tanks	IV-79

LIST OF TABLES (CONTINUED)

		PAGE
	Petroleum Storage Gasoline (Working)	
Table IV-21	Hydrocarbon Emissions from Gasoline Working Losses	IV-83
Table IV-22	Hydrocarbon Limitations for Working Losses from Casoline	IV-85
	Petroleum Transfer Gasoline	
Table IV-23	Hydrocarbon Emissions from Transfer of Gasoline	IV-86
Table IV-24	Hydrocarbon Limitations from Petroleum Transfer	IV-88
	Petroleum Service Stations	
Table IV-25	Hydrocarbon Emissions from Service Stations	IV-91
V	Chemical Process Industry	
	Acrylonitrile	
Table V-1	Hydrocarbon Emissions from Acrylonitrile Manufacture	V-2
Table V-2	Hydrocarbon Emissions and Limitations from Acrylonitrile Manufacture	V-4
	Ammonia (Methanator Plant)	
Table V-3	Hydrocarbon Emissions from Ammonia Manufacture Using a Methanator Plant	V-6
Table V-4	Hydrocarbon Emissions and Limitations from Ammonia Manufacture Using a Methanator Plant	V-8
	Ammonia (Regenator and CO Absorber Plant)	
Table V-5	Hydrocarbon Emissions from Ammonia Manufacture with Regenator and CO Plant	V-10
Table V-6	Hydrocarbon Emissions and Limitations from Ammonia Manufacture with Regenator and CO Plant	V-11
	Carbon Black	
Table V-7	Hydrocarbon Emissions from Carbon Black Manufacturing	V-15
Table V-8	Hydrocarbon Emissions and Limitations from Carbon Black Manufacturing	V-17
	Charcoal	
Table V-9	Particulate and Hydrocarbon Emissions from Charcoal Manufacturing	V-19
Table V-10	Particulate and Hydrocarbon Emissions and Limitations from Charcoal Manufacturing	V-22
	Ethylene Dichloride	
Table V-11	Hydrocarbon Emissions from Ethylene Dichloride Manufacture	V-25
	Ethylene Oxide	
Table V-13	Hydrocarbon Emissions from Ethylene Oxide Manufacture by Air Oxidation	V-28
	Formaldehyde	
Table V-15	Hydrocarbon Emissions from Formaldehyde Manufacture	V-31
Table V-16	Hydrocarbon Emissions and Limitations from Formaldehyde Manufacture	V-32
	Paint	
Table V-17	Hydrocarbon Emissions from Paint Manufacturing	V-35
Table V-18	Hydrocarbon Emissions and Limitations from Paint Manufacturing	V-37
	Phthalic Anhydride	
Table V-19	Hydrocarbon Emissions from Phthalic Anhydride Manufacture	V-40

LIST OF TABLES (CONTINUED)

		PAGE
	Polyethylene (High Density)	
Table V-21	Hydrocarbon Emissions from Manufacture of High Density Polyethylene	V-44
Table V-22	Hydrocarbon Emissions and Limitations from Manufacture of High Density Polyethylene	V-45
	Polyethylene (Low Density)	
Tavle V-23	Hydrocarbon Emissions from Manufacture of Low Density Polyethylene	V-48
	Polystyrene	
Table V-25	Hydrocarbon Emissions from Polystyrene Manufacture	V-52
Table V-26	Hydrocarbon Emissions and Limitations from Polystyrene Manufacture	V-53
Table V-26A	Control Required for Polystyrene Manufacture	V-54
	Printing Ink	
Table V-27	Hydrocarbon Emissions from Printing Ink Manufacture	V-56
Table V-28	Hydrocarbon Emissions and Limitations from Printing Ink Manufacture	V-57
	Synthetic Fibers (Nylon)	
Table V-29	Hydrocarbon Emissions from Nylon Manufacture	V-59
Table V-30	Hydrocarbon Emissions and Limitations from Nylon Manufacture	V-61
	Varnish	
Table V-31	Hydrocarbon Emissions from Varnish Manufacturing	V-63
Table V-32	Hydrocarbon Emissions and Limitations from Varnish Manufacturing	V-65
	Synthetic Resins (Phenolic)	
Table V-33	Hydrocarbon Emissions from Phenolic Resin Manufacture	V-66
Table V-34	Hydrocarbon Emissions and Limitations from Phenolic Resin	V-68
VI	Food and Agricultural Industry	
	Beer Processing	
Table VI-1	Hydrocarbon Emissions from Beer Processing	VI-2
Table VI-2	Hydrocarbon Emissions and Limitations from Beer Processing	VI-3
	Cotton Ginning	
Table VI-3	Particulate Emissions - Machine Picked Cotton	VI-7
Table VI-4	Particulate Emissions and Limitations from Cotton Ginning	VI-10
	Deep Fat Frying	
Table VI-5	Hydrocarbon Emissions from Deep Fat Frying	VI-13
	Direct Firing of Meats	
Table VI-7	Particulate Emissions from Direct Firing of Meats	VI-16
Table VI-7A	Hydrocarbon Emissions from Direct Firing of Meats	VI-17
	Feed Milling (Excluding Alfalfa)	
Table VI-9	Particulate Emissions from Feed Milling	VI-20
Table VI-10	Particulate Emissions and Limitations from Feed Milling	VI-22
	Fertilizer - Ammonium Sulfate	
Table VI-11	Particulate Emissions from Ammonium Sulfate Fertilizer Manufacture	VI-23

LIST OF TABLES (CONTINUED)

		PAGE
Table VI-12	Particulate Emissions and Limitations for Ammonium Sulfate Production	VI-26
	Fertilizer - Ammonium Nitrate	
Table VI-15	Particulate Emissions from Ammonium Nitrate Fertilizer Manufacture	VI-28
Table VI-16	Particulate Emissions and Limitations from Ammonium Nitrate Fertilizer Manufacture	VI-30
Table VI-16A	Control and Compliance for Ammonium Nitrate Production	VI-30
	Grain - Drying	
Table VI-17	Particulate Emissions from Grain Drying	VI-34
Table VI-18	Particulate Emissions and Limitations from Grain Drying	VI-36
	Grain - Processing	
Table VI-19	Particulate Emissions from Grain Processing	VI-38
Table VI-20	Particulate Emissions and Limitations from Grain Processing	VI-40
	Grain - Screening and Cleaning	
Table VI-21	Particulate Emissions from Grain Screening and Cleaning	VI-42
Table VI-22	Particulate Emissions and Limitations from Grain Screening and Cleaning	VI-44
	Vegetable Oil Manufacture	
Table VI-25A	Particulate Emissions from Soybean Oil Manufacture	VI-49
Table VI-25B	Hydrocarbon Emissions from Soybean Oil Manufacture	VI-50
Table VI-26	Hydrocarbon Emissions and Limitations from Vegetable Oil Manufacture	VI-52
Table VI-26B	Particulate Emissions and Limitations from Vegetable Oil Manufacture	VI-53
VII	Metallurgical Industry	
	Cast Iron Foundries (Electric Furnaces)	
Table VII-1	Particulate Emissions from Cast Iron Foundries (Electric Furnaces)	VII-2
Table VII-2	Particulate Emissions and Limitations from Cast Iron Foundries (Electric Furnaces)	VII-5
	Cast Iron Foundries (Cupola Furnace)	
Table VII-3	Particulate Emissions from Cast Iron Foundries (Cupolas)	VII-9
Table VII-4	Particulate Emissions and Limitations from Cast Iron Foundries (Cupolas)	VII-12
	Cast Iron Foundries (Core Ovens)	
Table VII-5	Particulate and Hydrocarbon Emissions from Core Ovens in Cast Iron Foundries	VII-15
Table VII-6	Particulate and Hydrocarbon Emissions and Limitations from Core Ovens	VII-18
	Iron and Steel Plants (Electric Arc Furnaces)	
Table VII-7	Particulate Emissions from Iron and Steel Plants	VII-22
Table VII-8	Particulate Emissions and Limitations from Electric Arc Furnaces	VII-25
	Iron and Steel Plants (Scarfing)	
Table VII-9	Particulate Emissions from Iron and Steel Scarfing	VII-27

LIST OF TABLES (CONTINUED)

		PAGE
Table VII-10	Particulate Emissions and Limitations from Iron and Steel Scarfing	VI-29
	Iron and Steel Plants (Sintering)	
Table VII-11	Sintering Particulate Emissions	VII-33
Table VII-12	Particulate Emissions and Limitations for Sintering	VII-35
	Iron and Steel Plants (Open-Hearth Furnaces)	
Table VII-13	Particulate Emissions from Open-Hearth Furnaces	VII-38
Table VII-14	Particulate Emissions and Limitations from Open-Hearth Furnaces	
	Primary Aluminum	VII-40
Table VII-15	Particulate Emissions from Primary Aluminum Manufacture	VII-62
	Primary Copper	
Table VII-17	Particulate Emissions from Primary Copper Production	VII-45
Table VII-18	Particulate Emissions and Limitations from Primary Copper Production	
	Steel Foundries (Secondary)	VII-47
Table VII-19	Particulate Emissions from Steel Foundries	VII-50
Table VII-20	Particulate Emissions and Limitations from Steel Foundries	
	Ferroalloy	VII-52
Table VII-21	Particulate Emissions from Ferroalloy Production	VII-56
Table VII-22	Particulate Emissions and Limitations from Ferroalloy Production	
VIII	Mineral Products Industry	VII-58
	Asphalt Batching	
Table VIII-1	Particulate Emissions from Asphalt Batching	VIII-2
Table VIII-2	Particulate Emissions and Limitations from Asphalt Batching	
	Asphalt Roofing (Blowing)	VIII-4
Table VIII-3	Hydrocarbon Emissions from Asphalt Roofing Manufacture	VIII-6
Table VIII-4	Hydrocarbon Emissions and Limitations from Asphalt Roofing Manufacture	
	Brick and Related Clay Products	VIII-8
Table VIII-5	Particulate Emissions from Brick Manufacture	VIII-11
Table VIII-6	Particulate Emissions and Limitations from Brick Manufacture	
	Cement Plants	VIII-13
Table VIII-7	Particulate Emissions from Cement Manufacture	VIII-16
Table VIII-8	Particulate Emissions and Limitations from Cement Manufacture	
	Coal Cleaning (Thermal Drying)	VIII-18
Table VIII-9	Particulate Emissions from Coal Cleaning (Thermal Drying)	VIII-22
Table VIII-10	Particulate Emissions and Limitations from Coal Cleaning (Thermal Drying)	
	Concrete Batching	VIII-24
Table VIII-11	Particulate Emissions from Concrete Batching	VIII-26
Table VIII-12	Particulate Emissions and Limitations from Concrete Batching	

LIST OF TABLES (CONTINUED)

		PAGE
	Glass Wool Production (Soda-Lime)	
Table VIII-13	Particulate Emissions from Soda-Lime Glass Manufacture	VIII-31
Table VIII-14	Particulate Emissions and Limitations from Soda-Lime Glass Manufacture	VIII-33
	Gypsum	
Table VIII-15	Particulate Emissions from Gypsum Processing	VIII-35
Table VIII-16	Particulate Emissions and Limitations from Gypsum Processing	VIII-37
	Mineral Wool	
Table VIII-17	Hydrocarbon Emissions from Mineral Wool Processing	VIII-39
Table VIII-18	Hydrocarbon Emissions and Limitations from Mineral Wool Processing	VIII-40
	Phosphate Rock (Drying)	
Table VIII-19	Particulate Emissions from Phosphate Rock Drying	VIII-42
Table VIII-20	Particulate Emissions and Limitations from Phosphate Rock Drying	VIII-44
	Phosphate Rock (Grinding)	
Table VIII-21	Particulate Emissions from Phosphate Rock Grinding	VIII-46
Table VIII-22	Particulate Emissions and Limitations from Phosphate Rock Grinding	VIII-48
	Sand and Gravel Processing	
Table VIII-23	Particulate Emissions from Sand and Gravel Processing	VIII-51
Table VIII-24	Particulate Emissions and Limitations from Sand and Gravel Processing	VIII-53
	Stone Quarrying	
Table VIII-25	Particulate Emissions from Stone Quarrying and Processing	VIII-55
Table VIII-26	Particulate Emissions and Limitations from Stone Quarrying and Processing	VIII-57
IX	Petroleum Industry	
	Petroleum Refining, Fluid Catalytic Cracking Unit (FCCU)	
Table IX-1	Particulate Emissions from Fluid Catalytic Cracking Units	IX-2
Table IX-2	Particulate Emissions and Limitations from Fluid Catalytic Cracking Units	IX-3
X	Wood Processing	
	Wood Processing (Plywood)	
Table X-1	Particulate and Hydrocarbon Emissions from Plywood Manufacture	X-2
Table X-2	Particulate and Hydrocarbon Emissions and Limitations from Plywood Manufacture	X-5
XI	Manufacturing	
	Automobile Assembly Plant	
Table XI-1	Potential Reduction in Air Volume for Treatment	XI-1

LIST OF FIGURES

		PAGE
II	Solid Waste Disposal	
	Municipal Incinerator	
Figure II-1	Retort Multiple Chamber Incinerator	II-10
Figure II-2	In-Line Multiple Chamber Incinerator	II-10
	Industrial/Commercial Incinerators	
Figure II-3	Retort Multiple Chamber Incinerators	II-4
Figure II-4	In-Line Multiple Chamber Incinerator	II-4
IV	Evaporation Losses	
	Petroleum Transfer Gasoline	
Figure IV-1	Underground Storage Tank Vapor-Recovery System	IV-87
	Petroleum Storage Gasoline (Breathing)	
Figure IV-2	Fixed Roof Storage Tank	IV-76
Figure IV-3	Double-Deck Floating Roof Storage Tank (Nonmetallic Seal)	IV-77
Figure IV-4	Variable Vapor Storage Tank (Wet-Seal Lifter Type)	IV-77
	Petroleum Storage Gasoline (Working)	
Figure IV-5	Variable Vapor Storage Tank (Wet-Seal Lifter Type)	IV-82
Figure IV-6	Fixed Roof Storage Tank	IV-81
Figure IV-7	Double-Deck Floating Roof Storage Tank (Nonmetallic Seal)	IV-82
	Petroleum Refueling of Motor Vehicles	
Figure IV-8	Schematic of Vehicle Vapor Containment	IV-12
Figure IV-9	Vapor Control Nozzle	IV-13
Figure IV-10	Station Modification for Tight Fill Nozzle	IV-13
Figure IV-11	Retrofit Adapter for Past Models	IV-14
	Petroleum Service Stations	
Figure IV-12	Present Uncontrolled Service Station of Underground Tank	IV-90
		IV-91
Figure IV-13	Simple Displacement System	IV-92
Figure IV-14	On-Site Regeneration System	IV-92
Figure IV-15	Refrigeration System	IV-93
Figure IV-16	Compression Liquification System	
	Graphic Arts (Gravure)	
Figure IV-17	Rotogravure Printing Operation	IV-16
Figure IV-18	Emission Rates from a Typical Rotogravure Printing Operation	IV-17
Figure IV-19	Flow Diagram for Thermal Combustion Including Possibilities for Heat Recovery	IV-21
Figure IV-20	Flow Diagram for Catalytic Combustion Including Possibilities for Heat Recovery	IV-21
Figure IV-21	Flow Diagram of Adsorption Process	IV-22
	Graphic Arts (Letterpress)	
Figure IV-22	Web Letterpress, Publication	IV-26
Figure IV-23	Web Letterpress, Newspaper	IV-26
Figure IV-24	Emission Rates from Web Offset and Web Letterpress Employing Heatset Inks	IV-28
Figure IV-25	Flow Diagram for Thermal Combustion Including Possibilities for Heat Recovery	IV-30

LIST OF FIGURES (CONTINUED)

		PAGE
Figure IV-26	Flow Diagram for Catalytic Combustion Including Possibilities for Heat Recovery	IV-31
Figure IV-27	Flow Diagram of Adsorption Process	IV-32
	Graphic Arts (Metal Coating)	
Figure IV-28	Metal Sheet Coating Operation	IV-35
Figure IV-29	Metal Sheet Printing and Varnish Overcoating	IV-36
Figure IV-30	Flow Diagram for Thermal Combustion Including Possibilities for Heat Recovery	IV-38
Figure IV-31	Flow Diagram for Catalytic Combustion Including Possibilities for Heat Recovery	IV-39
Figure IV-32	Flow Diagram of Adsorption Process	IV-39
	Graphic Arts (Lithography)	
Figure IV-33	Web-Offset, Publication	IV-43
Figure IV-34	Emission Rates from Web Offset and Web Letterpress Employing Heatset Inks	IV-44
Figure IV-35	Flow Diagram for Thermal Combustion Including Possibilities for Heat Recovery	IV-48
Figure IV-36	Flow Diagram for Catalytic Combustion Including Possibilities for Heat Recovery	IV-49
Figure IV-37	Flow Diagram of Adsorption Process	IV-49
	Graphic Arts (Flexography)	
Figure IV-38	Flexographic, Publication Process	IV-54
Figure IV-39	Flexographic, Newspaper Process	IV-54
Figure IV-40	Emission Rates from Web Offset and Web Letterpress Employing Heatset Inks	IV-56
Figure IV-41	Flow Diagram for Thermal Combustion Including Possibilities for Heat Recovery	IV-58
Figure IV-42	Flow Diagram for Catalytic Combustion Including Possibilities for Heat Recovery	IV-59
Figure IV-43	Flow Diagram for Adsorption Process	IV-60
	Industrial Surface Coating	
Figure IV-44	Summary of Emission Rates from Industrial Surface Coating Operations	IV-63
Figure IV-45	Flow Diagram of a Surface Coating Operation	IV-65
Figure IV-46	Flow Diagram for Thermal Combustion Including Possibilities for Heat Recovery	IV-71
Figure IV-47	Flow Diagram for Catalytic Combustion Including Possibilities for Heat Recovery	IV-71
Figure IV-48	Flow Diagram of Adsorption Process	IV-69
	Degreasing	
Figure IV-49	Vapor Spray Degreaser	IV-1
Figure IV-50	Continuous Vapor Spray Degreaser	IV-2
V	Chemical Process Industry	
	Acrylonitrile	
Figure V-1	Sohio Process for Acrylonitrile Manufacture	V-1
	Ammonia Manufacture Process (Methanator Plant)	
Figure V-2	Ammonia Manufacture Process (Methanator Plant)	V-5

LIST OF FIGURES (CONTINUED)

		PAGE
	Ammonia Manufacture (Regenerator and CO Absorber Plant)	
Figure V-3	Diagram of Ammonia Manufacuting Process (CO Absorber and Regenerator Plant)	V-9
	Carbon Black	
Figure V-4	Flow Diagram of Channel Process	V-13
Figure V-5	Flow Diagram of Oil-Furnace Process	V-14
Figure V-6	Flow Diagram of Gas-Furnace Process	V-14
Figure V-7	Flow Diagram of Thermal Process	V-15
	Ethylene Dichloride	
Figure V-8	Direct Chlorination Flow Sheet	V-23
Figure V-9	Ethylene Dichloride Flow Diagram	V-24
	Ethylene Oxide	
Figure V-10	Ethylene Oxide Manufacture	V-27
	Formaldehyde	
Figure V-11	Formaldehyde Process	V-30
	Paint	
Figure V-12	Paint Manufacture Using Sand Mill for Grinding Operation	V-34
	Phthalic Anhydride	
Figure V-13	Phthalic Anhydride Reactions	V-39
Figure V-13A	Phthalic Anhydride Manufacturing Process	V-39
	Polyethylene (High Density)	
Figure V-14	High Density Polyethylene Manufacture	V-43
	Polyethylene (Low Density)	
Figure V-15	Low Density Polyethylene Manufacture	V-47
	Polystyrene	
Figure V-16	Polystyrene Manufacture	V-51
	Varnish	
Figure V-17	Typical Varnish Cooking Room	V-63
VI	Food and Agricultural Industry	
	Beer Processing	
Figure VI-1	Beer Processing	VI-1
	Fertilizer - Ammonium Nitrate	
Figure VI-2	Process for the Manufacture of Ammonium Nitrate by Neutralization of Nitric Acid	VI-27
	Grain - Drying	
Figure VI-3	Typical Column Dryer Used in Drying Grain	VI-33
Figure VI-4	Typical Rack Dryer Used in Drying Grain	VI-33
	Grain Processing	
Figure VI-5	Flour Milling	VI-38
	Fertilizer - Ammonium Sulfate	
Figure VI-6	Device for Agglomeration of Ammonium Sulfate Particles in a Gas Stream, Patent No. 3,410,054 by W. Deiters	VI-24
	Cotton Ginning	
Figure VI-7	Cotton Ginning	VI-6
	Deep Fat Frying	
Figure VI-8	Typical Hydrocarbon Afterburner Emission Control System for Control of Hydrocarbon Emissions	VI-6

LIST OF FIGURES (CONTINUED)

		PAGE
Figure VI-9	Typical Catalytic Oxidizer Hydrocarbon Emission Control System for Control of Hydrocarbon Emissions	VI-14
	Feed Milling (Excluding Alfalfa)	
Figure VI-10	Typical Feed Milling Operation	VI-19
	Vegetable Oil Manufacturing	
Figure VI-11	Continuous Feed Screw Press for Oil Extraction	VI-47
Figure VI-12	Continuous Flow Solvent Extraction Process for Vegetable Oil Manufacture	VI-48
Figure VI-13	Crude Vegetable Oil Refining Process	VI-49
VII	Metallurgical Industry	
	Cast Iron Foundries (Electric Furnaces)	
Figure VII-1	Process Flow Diagram, Melting Department	VII-1
Figure VII-2	Illustration of Electric Arc Furnace	VII-3
Figure VII-3	Illustration of Channel Induction Furnace	VII-3
	Ferroalloy	
Figure VII-4	Ferroalloy Process	VII-54
	Cast Iron Foundries (Cupola Furnace)	
Figure VII-5	Illustration of Conventional Lined Cupola	VII-8
	Cast Iron Foundries (Core Ovens)	
Figure VII-6	Process Flow Diagram - Core Making	VII-14
	Iron and Steel Plants (Electric Arc Furnaces)	
Figure VII-7	Flow Diagram of an Iron and Steel Plant	VII-20
Figure VII-8	Electric Arc Steel Furnace	VII-21
	Steel Foundries (Secondary)	
Figure VII-9	Steel Foundry Process Diagram	VII-49
Figure VII-10	Cross Sectional View of an Open-Hearth Furnace	VII-37
	Cast Iron Foundries (Cupola Furnace)	
Figure VII-11	Process Flow Diagram, Melting Department	VII-7
	Iron and Steel Plants (Sintering)	
Figure VII-12	Sintering Process Flow Diagram	VII-31
Figure VII-13	Sinter Cooler	VII-32
	Primary Copper	
Figure VII-14	Copper Smelting	VII-43
Figure VII-15	Reverberatory Furnace	VII-44
	Primary Aluminum	
Figure VII-20	Bayer and Combined Process	VII-60
VIII	Mineral Products Industry	
	Asphalt Batching	
Figure VIII-1	Flow Diagram for Hot-Mix Asphalt Batch Plant	VIII-1
	Brick and Related Clay Products	
Figure VIII-2	Basic Flow Diagram of Brick Manufacturing Process	VIII-10
	Cement Plants	
Figure VIII-3	Basic Flow Diagram of Portland Cement Manufacturing Process	VIII-15
	Coal Cleaning (Thermal Drying)	
Figure VIII-4	Coal Cleaning Process Flow Diagram	VIII-20
Figure VIII-5	Schematic Sketch of Screen-Type, Thermal Coal Drying Unit	VIII-21

LIST OF FIGURES (CONTINUED)

		PAGE
Figure VIII-6	Schematic Drawing Showing Component Parts of Flash Drying Unit	VIII-21
Figure VIII-7	Pressure Type Fluidized-Bed Thermal Coal Dryer Showing Component Parts and Flow of Coal and Drying Gases	VIII-22
	Glass Wool Production	
Figure VIII-8	Soda-Lime Glass Manufacture	VIII-30
	Gypsum	
Figure VIII-9	Gypsum Products Flow Diagram	VIII-34
	Mineral Wool	
Figure VIII-10	Flow Diagram of Mineral Wool Process	VIII-38
	Phosphate Rock (Drying)	
Figure VIII-11	Phosphate Rock Processing	VIII-42
	Phosphate Rock (Grinding)	
Figure VIII-12	Phosphate Rock Processing	VIII-46
	Sand and Gravel Processing	
Figure VIII-13	Sand and Gravel Processing Flow Diagram	VIII-50
	Stone Quarrying	
Figure VIII-14	Flow Diagram for Rock Processing	VIII-54
IX	Petroleum Industry	
	Petroleum Refining, Fluid Catalytic Cracking Unit	
Figure IX-1	Fluid Catalytic Cracking Unit	IX-1
X	Wood Processing	
	Wood Processing (Plywood)	
Figure X-1	Detailed Process Flow Diagram for Veneer and Plywood	X-1
XI	Manufacturing	
	Automobile Assembly	
Figure XI-1	Fresh Air Staging	XI-2

1.0 Summary

This report presents the results of a study whose objective is to provide The Environmental Protection Agency (EPA) with a document suitable for state agencies to make a first cut assessment of the emission limitation potential for sources within their jurisdictions. The disbursement of the document is consistent with the July, 1977 deadline, at which time states must submit attainment plans for those areas where the current Implementation Plan is substantially inadequate. The document contains quantitative information for eighty source categories which were selected by EPA as those common to many areas of the U.S. and would potentially benefit most from application of control devices.

The analysis of the 80 source categories is restricted to either particulate matter or hydrocarbon emissions or for a few source categories both pollutants are considered. These source categories are classified into eleven main areas:

I	External Combustion	VII	Metalurgical Industry
II	Solid Waste Disposal	VIII	Mineral Product Industry
III	Internal Combustion	IX	Petroleum Industry
IV	Evaporation Losses	X	Wood Processing Industry
V	Chemical Process Industry	XI	Manufacturing Industry
VI	Food and Agricultural Industry		

The eleven main categories are subdivided by particulate and hydrocarbon emissions according to Table 1.

TABLE 1

SOURCE CATEGORY CLASSIFICATION

Particulate Matter	Hydrocarbons
I External Combustion	
Boilers (Wood Waste	Petroleum Refinery
Boilers (.3-10 x 10^6 BTU/hr)	(Process Gas Comb)
Boilers (10-250 x 10^6 BTU/hr)	
Boilers (>250 x 10^6 BTU/hr)	
II Solid Waste Disposal	
Open Burning (Agricultural)	
Sugar Cane (Field Burning)	
Industrial/Commercial Incinerator	
Municipal Incinerators	
III Internal Combustion	
Internal Combustion Engines (Diesel & Dual Fuel)	Internal Combustion Eng. (Diesel & Dual Fuel)
IV Evaporation Losses	
	Degreasing
	Dry Cleaning
	Graphic Arts (Flexography)
	Graphic Arts (Gravure)
	Graphic Arts (Lithography)
	Graphic Arts (Letter Press)
	Graphic Arts (Metal Decorating
	Industrial Surface Coating
	Petroleum Refueling
	Petroleum Service Stations
	Petroleum Storage Gasoline (Breathing)
	Petroleum Storage Gasoline (Working)
	Petroleum Transfer Gasoline
V Chemical Process Industry	
	Acrylonitrile
	Ammonia (Methanator Plant)
	Ammonia (Regenerator & CO_2 Absorber)
Carbon Black	Carbon Black
Charcoal	Charcoal
	Ethylene Dichloride
	Ethylene Oxide
	Formaldehyde
	Paint
	Pthalic Anhydride
	Polyethylene (high density)
	Polyethylene (low density)
	Polystyrene
	Printing Ink
	Synthetic Fibers (Nylon)
	Vernish

Particulate Matter	Hydrocarbons
VI Food and Agricultural Industry	
Beer Processing	Beer Processing
Cotton Ginning	
Deep Fat Frying	Deep Fat Frying
Direct Firing of Meats	Direct Firing of Meats
Feed Milling (Excluding Alfalfa)	
Fertilizer - Diammonium Phosphate	
Fertilizer - Nitrate	
Grain Handling - Nitrate	
Grain Handling (Drying)	
Grain Handling (Processing)	
Grain Handling (Screening & Cleaning)	
Grain Handling (Transfer)	
Vegetable Oil Manufacturing	Vegetable Oil Manufacturing
VII Metalurgical Industry	
Cast Iron Foundries (Electric Furnace)	
Cast Iron Foundries (Cupola Furnace)	
Cast Iron Foundries (Core Ovens)	Cast Iron Foundries (Core Ovens)
Iron and Steel Plants (Electric Arc)	
Iron and Steel Plants (Scarfing)	
Iron and Steel Plants (Sintering)	
Iron and Steel Plants (Open Hearth Furnaces)	
Primary Copper	
Primary Aluminum	
Steel Foundries (Secondary)	
VIII Mineral Products Industry	
Asphalt Batching	
Asphalt Roofing (Blowing)	Asphalt Roofing (Blowing)
Brick & Related Clay Products	
Cement Plants	
Coal Cleaning (Thermal Drying)	
Concrete Batching	
Glass Wool Production (Soda Lime)	
Gypsum	
Mineral Wool	
Phosphate Rocks (Drying)	

Particulate Matter	Hydrocarbons
VIII Mineral Products Industry (Continued)	
Phosphate Rocks (Grinding)	
Sand and Gravel Processing	
Stone Quarrying	
IX Petroleum Industry	
	Fluid Catalytic Cracking Units
X Wood Processing	
Plywood	Plywood
XI Manufacturing	
Automobile Assembly	Automobile Assembly

The eighty source categories are assessed according to (1) typical plant size and associated emissions, (2) applicable control equipment efficiencies and (3) potential for compliance with New Source Performance Standards and the most and least restrictive regulatory limitations. The document presents data typical of current emissions and control techniques. The document does not address whether the source categories studied are controlled to either Best Available Control Technology (BACT) or Reasonably Available Control Technology (RACT). For some of the source categories, more detail would have been of real use to agency personnel. However, the intended objective limited the development to comparable levels of detail for each of the eighty categories.

2. Introduction

The Environmental Protection Agency (EPA) is preparing to distribute to State Agencies a document suitable for assisting agencies in making a first cut assessment of the emission limitation potential for sources within their jurisdiction. EPA has required states with designated Air Quality Maintenance Areas, through (40 CFR, Part 51) to submit plans that describe how acceptable air quality will be attained and/or maintained. Much progress has been made in defining problem areas, especially in and around urban centers, where air quality levels exceed primary and secondary standards. Special efforts are under way to increase Federal, State and Local enforcement, and to determine the extent to which implementation plans can be remedied. EPA is critically aware that specific and accurate information is necessary to define source categories to which limited funds and personnel can be applied. EPA is also aware that a significant gap is growing between level of resources required to organize and implement state plans and the level of effort states have available. The lack of suitably trained staff is hampering states from making timely and accurate submittals to EPA of required data and plans.

EPA has previously assisted State Agencies in fulfilling their required tasks, by supplying them with appropriate reference documents. EPA realizes that a document which assists in prioritizing sources would allow state agencies to focus their efforts on areas that would be productive. State agency staff are interested in determining which types of sources emit sufficiently large quantities of pollutants, and could exceed even lenient regulations. This type of information will allow agency staff to assess the adequacy of the data on file to determine compliance or non-compliance.

The analysis of the 80 categories considered either particulate matter or hydrocarbon emissions. These source categories were classified into eleven main areas:

I	External Combustion	VII	Metallurgical Industry
II	Solid Waste Disposal	VIII	Mineral Products Industry
III	Internal Combustion	IX	Petroleum Industry
IV	Evaporation Losses	X	Wood Processing Industry
V	Chemical Process Industry	XI	Manufacturing Industry
VI	Food and Agricultural Industry		

For each of the eighty categories, an outline format is used to present pertinent information and data. The format is identical for each category to assure uniformity and ease of use. The elements of the format and an explanation of what is contained in each is presented below:

A. Source Category
B. Sub-Category
C. Source Description
D. Emission Rates
E. Control Equipment
F. New Source Performance Standards and Regulation Limitation
G. References

Section A consists of a one line designation, denoting one of the eleven categories by Roman numerical and industry group.

Section B consists of a one line designation that distinguishes a particular industry within the major category.

Section C consists of a brief description of the process, type of product manufactured and approximate locations in the process where emissions, including fugitive emissions occur. No estimates are made for fugitive emissions because of a lack of quantitative data. Fugitive emissions are variable on a day to day basis even from one plant. As such, they are not amenable to accurate estimation. Also, traditional stack techniques for control are not appropriate for reduction of fugitive emissions. The description of each sub-category includes information on the type of raw material used, description of process equipment and a flow diagram of the process.

Section D consists of a brief discussion of the quantity of particulate and/or hydrocarbon emissions arising from an average size plant. If data are available estimates are made for discrete items of equipment in the plant. Each sub-section contains at least one table that describes the emissions on a lbs/ton and lbs/hr basis for a typical plant. This is done to simplify future emission calculations for sources that have process weights different than the ones used. The table for emission rates presents uncontrolled and controlled emissions. Where information for control is not available for a specific process, a range of control efficiencies is hypothesized, so a realistic comparison to regulations could be made.

Section E consists of a brief discussion of control equipment typically associated with the process described in Section D. The efficiencies found in the emission table in Section D, are quoted from available literature. The equipment and efficiencies listed in Section E do not imply these are the only types of control possible, or that the control efficiencies listed are the highest possible. Specification of control efficiencies that depict best available control require exact definition of stack parameters which is beyond the scope of this task.

Section F consists of a brief discussion of where controlled and uncontrolled emissions stand with respect to New Source Performance Standards and Regulatory Limitations. Examples are given of least restrictive and most restrictive regulations for the size of the process listed in Section D. The examples given may not necessarily be the most or least restrictive in every case, since some states require specification of stack parameters in order to define an allowable emission. The states used for examples in the text and tables are therefore qualified as being representative of a most and a least restrictive limitation. In every Section F, there is at least one table that presents controlled and uncontrolled emissions and limitations. Surveying this table indicates what level of control is necessary to meet the quoted limitations. For a majority of the processes, qualifying remarks and a table are included that specify whether existing control technology is adequate to meet New Source Performance Standards where applicable and regulatory limitations.

Section G consists of a listing of references that were used to develop the information presented in the text. Literature references that were not used but reviewed are also listed. This allows the reviewer a broader understanding of the material surveyed.

3.0 Conclusions and Discussion

The format and inclusion of the seven sections as outlined in the Introduction allows rapid analysis of numerous details. Because the eighty source categories are distinct and separate from each other, one category can be removed from the rest of the text without losing or destroying the meaning of either the category removed or the categories remaining. While this approach has necessitated repetition of much of the details of the regulation and reference sections, it is expected to provide maximum utilization of the document. Updating and revising can be performed relatively easily because the categories are removable as a unit. Additional categories can be added without disrupting the page numbering or conclusions drawn from the other categories.

The analysis of the eleven major industry categories, as listed in Section 2.0, is based on the application of a six point overview presented by the following questions.

1. Is the source category commonly found or is it relatively rare?

2. Does the source category have the potential for a wide range of process weights?

3. Does one source category consistently exceed regulatory limits or does the uncontrolled source category operate within all regulatory limits?

4. Are there New Source Performance Standards which apply to the subcategories?

5. Is existing control technology sufficiently adequate to allow emissions to meet regulatory limitations?

6. Does the source category have the potential for fugitive emission problems?

The framework for the analysis of the eleven main industry classifications is based on the responses to the above six questions.

1. Source categories that are common in all fifty states have universal interest in terms of the other five questions. Source categories that are relatively rare could require special treatment tailored specifically to individual plants and/or regulatory bodies.

2. Source categories that have a wide range of process weights require extra care when assessing compliance with regulatory limitations. Many limitations are either unusually restrictive or lenient at the extremes of the process weight curve.

3. Source categories that consistently exceed regulatory limitations indicate that adequate control has not been applied. Source categories that meet regulatory limits with no control could indicate that a specific regulation should be adopted or tightened to reduce emissions from uncontrolled sources.

4. The existence of New Source Performance Standards indicates that these source categories should be reviewed first by agency staff to assure compliance.

5. If existing control technology is not adequate to meet regulatory limitations, agency staff should investigate the accomplishments of similar source categories to justify (1) that control technology does not exist or (2) whether the source category has been deliberately slow in applying control.

6. Sources that have a fugitive emission potential or problem present a complicated emission picture to agency staff. Agency staff should quickly distinguish points within a source that are covered by stack limitations and which aspects are fugitive. Recommendations for assessment and control of fugitive emissions is beyond the scope of this task.

The following eleven sections discuss each of the major industry groups as outlined in Section 1.0, according to the above six point overview:

I External Combustion

The External Combustion Category covers process heaters and boilers of all sizes. Boilers of all sizes are common to all fifty states, and are either cast iron, firetube or four sizes of watertube design. There are five types of coal fired units. New Source Performance Standards have been promulgated for boilers larger than 250 x 10^6 BTU/hr. Coal fired boilers require controls to meet even lenient limitations. New Mexico is representative of states that require controls for oil fired units. Process heaters were not evaluated because of lack of appropriate literature.

II Solid Waste Disposal

The Solid Waste Disposal Category covers sugar cane field burning, agricultural burning, municipal incinerators and industrial/commercial incinerators. Sugar cane burning was not covered because of lack of data. Agricultural burning data was developed for eighteen states. For these eighteen states hydrocarbon emissions totaled 146,000 tons. Regulations have been enacted to control agricultural burning. Municipal incinerators often have capacities of 50 tons/day and require controls to comply with regulations. Industrial/commercial incinerators normally have capacities of 50 lbs/hr to 4,000 lbs/hr and normally require controls to comply with existing regulations. New Source Performance Standards have been promulgated for incinerators charging more than 10 tons/day.

III Internal Combustion Engines

The internal Combustion Engine Category consisted of one sub-category, diesel and dual fuel engines. Particulate emission data for this category was quite sketchy so this category was not developed.

IV Evaporation Losses

The category of Evaporation Losses consists of the various phases of gasoline storage, handling and marketing, the graphic arts industry and various phases of industrial surface coating operations. EPA has promulgated New Source Performance Standards for storage vessels larger than 40,000 gallons. Los Angeles Rule 66-type legislation has become relatively common, which sharply limits the quantities of both reactive and non-reactive hydrocarbons that can be released form all types of processes. Hydrocarbon regulations are characterized because they are not based on process weight, thereby requiring large sources to employ extensive control.

V Chemical Process Industry

The Chemical Process Industry consists of basic manufacturing processes that provide other industries with the organic and inorganic chemicals. The industry is to be noted because of the wide range of process weight rates. Varnish manufacture is typical of a small process (0.03 tons/hr) and ethylene dichloride is typical of a large process (24 tons/hr). No New Source Performance Standards have been promulgated for the categories as outlined in Section 1.0 for the Chemical Process Industries. The categories as described for the Chemical Process Industry require extensive controls to meet the Los Angeles Rule 66 limitation of 3 lbs/hr. For many of the larger processes, control technology has not been fully demonstrated.

VI Food and Agricultural Industry

The Food and Agricultural Industry consists of the various grain handling and processing operations, food and beverage preparation and fertilizer production. The grain handling operations presented the potential for substantial particulate emissions. The economic value of the grain has warranted investment in hoods, cyclones and fabric filters. However, a number of the grain operations can comply with existing regulations even uncontrolled. Food preparation included direct firing of meat, deep fat frying and vegetable oil manufacturing. The hydrocarbon emissions from these sources, while not large compared to those in category IV, do comprise local problems. These types of sources are usually uncontrolled and often create a substantial odor problem. In general, they are unregulated in the traditional lbs/hour basis. The fertilizer processes quoted have relatively large process weights (15 tons/hr) and the technology for control is firmly established. Inadequate process data for diammonium phosphate necessitated not completing this category.

VII Metallurgical Industry

The Metallurgical Industry consists of the basic processes to produce iron, steel, copper and aluminum metals. The industry is characterized by large and varied process weights. Core ovens are representative of a small process weight of 0.05 tons/hour and sintering represents a large process of 250 tons/hr. All of the Metallurgical Industry Processes consume large amounts of energy mostly by burning fuels. This, plus the nature of the basic reduction processes, produces the potential for large quantites of particulate emissions. New Source Performance Standards have been promulgated for copper smelters. Various states have passed specific and general process regulations for the industries considered under this category. Particulate emission limitations are based on concentration, control efficiency, gas volume and process weight rate. All of the sources in this category require some sort of control to comply with existing regulations. Adequate control technology does exist to meet existing state regulations and for copper smelters to meet New Source Performance Standards.

VIII Mineral Products Industry

The Mineral Products Industry consists of sources that either make or use asphalt and cement, coal drying, bricks, glass wool, gypsum, mineral wool, and phosphate rock grinding. Brick and Related Clay Products is typical of a smaller process (3 tons/hour) and Stone Quarrying is typical of a larger process (97 tons/hr). All of these source categories are relatively heavy emitters of particulate matter and all require some control to meet even lenient regulatory limitations. New Source Performance Standards have been promulgated for Portland Cement Plants.

IX Petroleum Industry

The Petroleum Industry for this report is comprised of only one source category, Fluid Catalytic Cracking Units (FCCU). FCCU are characterized by their large energy requirements, high catalyst recirculation rate and potential for being a large emitter of CO and particulates. FCCU are designed to process 20,000 to 150,000 barrels/day of fresh crude. FCCU are often equipped with CO boilers and electrostatic precipitators to reduce emissions. Several states have specific regulations for controlling FCCU and New Source Performance Standards have been promulgated for FCCU.

X Wood Processing Industry

The Wood Processing Industry contains only one source category, Plywood Manufacturing. Both hydrocarbon and particulate emissions were assessed. Plywood manufacturing process weights typically average about 4.0 tons/hour. The particulate emission regulations require baghouses. The hydrocarbon emissions can effectively be controlled with an afterburner, and in a few instances by a condenser, to meet the Los Angeles Rule 66-type legislation.

XI Manufacturing Industry

The Manufacturing Industry for this report includes only one sub-category; automobile painting. The quantity of solvents emitted from a typical paint line is large compared to the Rule 66 type regulations. The concentration of hydrocarbons in the exhaust is fairly low thereby making the cost of scrubbing prohibitive. Recently "staged" air make up has reduced significantly the volume of air needed to be treated.

A. Source Category: I External Combustion

B. Sub Category: Wood Waste Boilers

C. Source Description:

Wood waste boilers are very similar in design and construction to coal fired spreader stokers and are commonly found at pulp paper mills. The waste boilers along with the chemical recovery unit provide the paper pulp plant with much of its energy requirements. The fuel for a wood waste boiler is traditionally wet bark and wood refuse originating from the debarking and cleanup of logs prior to shredding. The moisture content of the refuse can be as high as 70 to 80 percent. Whenever it exceeds an average of 55 percent, the bark is either pressed to remove the excess water or mixed with drier material to produce a substance that will ignite consistently. Depending upon the power requirements of the boiler and availability of auxiliary fuel, oil or coal can usually be simultaneously fired. The typical spreader stoker used for bark burning allows the bark to enter high enough in the fire box to allow evaporation of excessive moisture and permit oxidation of most of the combustible matter. This is accomplished and aided by rows of nozzles blowing preheated air tangentially at various levels. All of the bark passes through this highly turbulent high temperature gas zone where a large portion of the bark burns rapidly, and only the larger particles fall to the grate. (1) 1.6-1 Typical wood waste boilers are six million BTU/hr (1512) x 10^6 cal/hr) with larger units as high as 450 million BTU/hr (113,400 x 10^6 cal/hr). This corresponds to approximately 700 lbs/hr (318 kg/hr) to 53,000 lbs/hr (24,040 kg/hr) of wood waste assuming a heat content of 8,500 BTU/lb (4,718 cal/g). (2) 11-62

D. Emission Rates:

Particulate emissions result from the stack of the waste heat boiler burning wood and bark. Improper maintenance of the grates especially when using coal as an auxiliary fuel is a primary reason for excessive emissions. In addition excessive moisture in the bark will cause poor combustion with resultant smoking. The emission rate per ton of wood burned is expressed as a range since there are several variables that can cause emissions of particulates to vary from boiler to boiler and even on the same boiler. Under normal conditions, the particulate emissions range between 25-30 lbs (11.25-13.5 kg) of particulate per ton of wood burned. Table I-1 shows the heat input in 10^6 BTU/hr, and 10^6 cal/hr and the amount of wood consumed. 211-62

TABLE I-1

WOOD WASTE BOILER PARTICULATE EMISSIONS

Type of Operation & Control	% Control	lbs part / Ton Wood	kg part / M Ton Wood	Tons/hr Wood	kg/hr Wood	Heat Input 10^6 BTU/hr	Heat Input 10^9 cal/hr	Emissions lbs/10^6 BTU	Emissions g/10^6 cal
Wood Waste Boiler, Uncontrolled	0	25-30*	12.5-15	.35-26.5	317.5-24090	6-450	1.5-113,400	1.6	2.9
Wood Waste Boiler with Cyclone	94	25-30	12.5-15	.35-26.5	317.5-24090	6-450	1.5-113,400	0.096	0.17
Wood Waste Boiler with Scrubber	98	25-30	12.5-15	.35-26.5	317.5-24090	6-450	1.5-113,400	0.032	0.058
Wood Waste Boiler with Electrostatic precipitator	99	25-30	12.5-15	.35-26.5	317.5-24090	6-450	1.5-113,400	0.016	0.029
Wood Waste Boiler with Fabric Filter	99.5	25-30	12.5-15	.35-26.5	317.5-24090	6-450	1.5-113,400	0.008	0.014

*For this calculation, use 27.5.

E. Control Equipment:

Cyclones are commonly found on wood waste heat boilers. They can achieve efficiencies up to 94% under typical wood waste boiler outlet conditions, but 60% to 85% efficiencies are more common. Wet scrubbers can achieve 98% efficiency under normal boiler outlet conditions. However, wet scrubbers require higher capital investment and higher operating costs than other devices. Electrostatic precipitators can attain efficiencies of more than 99.5% depending on number, size and voltage of the plates. Most modern high efficiency electrostatic precipitators are designed to operate in the 97% to 99% range. Baghouses often have efficiencies of 99.5 percent but are sensitive to the high temperatures in boiler exhaust. (4)4-4

F. New Source Performance Standards and Regulation Limitations:

New Source Performance Standards (NSPS): On December 23, 1971 EPA promulgated NSPS for fossil-fuel fired steam generators. These standards pertain to steam generating units greater than 250 million BTU/hr heat input. As such, some of the wood waste boilers of the larger sizes would be covered by 0.1 pounds/10^6 BTU heat input limitation.

State Regulations for New and Existing Sources: Alaska and Florida are two states which distinguish wood waste boilers from other types of fossil fuel steam generators. Alaska states its emission limitation as a concentration, 0.15 grains/standard cubic foot. As such this limitation is not directly comparable to the lbs/10^6 BTU basis in Table I-2. Florida's expresses the limitation for wood waste boilers on a lbs/10^6 BTU basis as follows:

> Boilers $\geq 30 \times 10^6$ BTU/hr - 0.3 lbs/10^6 BTU for wood + 0.1 lbs/10^6 BTU for other fuels

Table I-2 presents uncontrolled and controlled particulate emissions and limitations for wood waste boilers.

TABLE I-2

PARTICULATE EMISSIONS AND LIMITATIONS FROM WOOD WASTE BOILERS[3]

Type of Boiler and Control	Heat Input		%	Emissions		Limitations lbs/10^6 BTU g/10^6 cal	
	10^6 BTU/hr	g cal/hr	Control	lbs/10^6 BTU	g/10^6 cal	NSPS*	Florida
Wood Waste Boiler Uncontrolled	6-450	1.5-113,400	0	1.6	2.9	0.1/.18	0.3/0.48
Wood Waste Boiler with Cyclone	6-450	1.5-113,400	85	.24	.109	0.1/.18	0.3/0.48
Wood Waste Boiler with Scrubber	6-450	1.5-113,400	94	.096	.044	0.1/.18	0.3/0.48
Wood Waste Boiler with Electrostatic Precipitator	6-450	1.5-113,400	98	.032	.015	0.1/.18	0.3/0.48
Wood Waste Boiler with Fabric Filter	6-450	1.5-113,400	99.5	.008	.004	0.1/.18	0.3/0.48

Potential Source Compliance and Emission Limitations: For wood waste boilers to comply with NSPS, 94% control would be necessary. For a wood waste boiler to comply with a 0.30 lbs/10^6 BTU limitation, such as Florida's, 81% control would be necessary.

The Environment Reporter was used to update the emission regulations.

G. References:

To develop the information in this section concerning wood waste boilers, the following references were used:

(1) Compilation of Air Pollutant Emission Factors, April 1974, USEPA.

(2) Exhaust Gases from Combustion and Industrial Processes, Engineering Science, Inc., Washington, D.C., October 1971.

(3) Analysis of Final State Implementation Plans, Rules and Regulations, EPA, Contract 68-02-0248, July 1972, Mitre Corporation.

(4) Background Information for Establishment of National Standards of Performance for New Sources - Industrial Size Boilers, Walden Research Corporation, EPA Control No. CAP 70-165; Task Order No. 5, June 30, 1971.

A. Source Category: I External Combustion

B. Sub Category: Boilers .3-10 x 10^6 BTU/Hr

C. Source Description:

Boilers in the .3-10 x 10^6 BTU/hr size range are generally one of two types utilizing coal, oil, or natural gas. Industry associations have categorized cast iron and firetube boilers in two classes as outlined in Table I-3.

TABLE I-3

CLASSIFICATION AND CAPACITY OF CAST IRON AND FIRETUBE BOILERS

Type of Boiler	Size		Heat Input	
	lbs steam/hr	kg steam/hr	10^6 BTU/hr	10^6 cal/hr
Cast Iron	650-8000	294.8-3629	.3-10.0	75.6-2520
Firetube	420-25000	190.5-11340	.3-10.0	75.6-2520

Cast iron boilers are generally noted for their extremely long service life, often 50 years. They can be overloaded without harm and can absorb demand surges in stride. However, they are somewhat expensive for a given size and can be operated only in the low pressure range for space heating steam. Higher capacity units are constructed by bolting multiple castings together to provide the desired capacity. The smaller sizes are made for house-hold installations, with the upper range having been extended to approximately 8000 lbs/hr (3600 kg/hr) steam.

Firetube boilers are generally noted for their fast response to moderate load change and are relatively inexpensive compared to other boiler types for a given capacity. However, they are inferior to cast iron boilers because they are more easily damaged during overload conditions and have a longevity of only about 20 years. Firetube and cast iron boilers are amenable to shop assembly, thus simplifying installation. All that is required are hook-ups for steam outlet, water inlet, flue, fuel, and electrical power. Firetube boilers are rarely found in domestic sizes but together with cast iron, are common in schools, institutions, apartment houses, offices, etc. They are also in increasing use for small industrial applications of space heating and process steam at moderate pressure.

D. Emission Rates

Particulate emissions result from the stacks of the boilers burning coal, oil, or natural gas. Improper maintenance can cause excessive smoke and poor economy of operation. Table I-3A shows the heat input in BTU/hr, the emissions produced per million BTU and million calories, and the effect of control efficiency on coal fired units.[2,3(1)4-2,3,4(3)9]

Many of the coal fired units found in operation have some type of control equipment installed to lower emission levels of particulates to within prevailing regulations.

TABLE I-3A

PARTICULATE EMISSIONS FROM .3-10 x 10^6 BTU/hr BOILERS

Type of Boiler and Control	Type of Fuel	% Control	Emissions	
			lbs/10^6 BTU input	g/10^6 cal input
Cast iron	Coal	0	1.54	2.77
Cast iron and dry cyclone	Coal	85	0.231	0.105
Cast iron and wet scrubber	Coal	98	0.031	0.056
Cast iron and electric precipitator	Coal	99	0.015	0.027
Cast iron and fabric filter	Coal	99.5	0.008	0.014
Cast iron	Distillate oil	0	0.108	0.195
Cast iron	Residual oil	0	0.103	0.186
Firetube	Natural gas	0	0.017	0.031
Firetube and dry cyclone	Coal	0	1.54	2.77
Firetube and wet scrubber	Coal	85	0.231	0.105
Firetube and electric precipitator	Coal	98	0.031	0.056
Firetube and fabric filter	Coal	99	0.015	0.027
Firetube	Distillate oil	99.5	0.008	0.014
Firetube	Residual oil	0	0.108	0.195
Firetube	Natural gas	0	0.103	0.186
			0.017	0.031

E. Control Equipment:

Many of the industrial and commercial applications of cast iron and firetube boilers have control equipment to reduce particulate emissions. The four most common methods are:

1. dry cyclone,
2. wet scrubber,
3. electrostatic precipitator, and
4. baghouse.

Dry cyclones can achieve up to 94% efficiency under typical boiler outlet conditions, but 60% - 85% efficiencies are more common. Wet scrubbers can achieve 98% efficiency under typical boiler outlet conditions and offer the advantage of some sulfur dioxide removal. However, wet scrubbers require higher capital investment and incur higher operating costs than other control devices. Electrostatic precipitators are the most common control device for boilers and can attain efficiencies of more than 99.5% depending on number, size and voltage of the plates. Most modern high efficiency electrostatic precipitators are designed to operate in the 97% to 99% range. Baghouses often have efficiencies of 99.5 percent but are sensitive to the high temperatures found in boiler exhausts. (2) A-14

F. New Source Performance Standards and Regulation Limitations:

New Source Performance Standards (NSPS): On December 23, 1971, EPA promulgated New Source Performance Standards for fossil fuel fired steam generators. However, these standards only pertain to steam generating units greater than 250 million BTU's per hour heat input. As such, boilers of .3-10 x 10^6 BTU/hr heat input described in Section D are controlled by individual state regulations for fossil fuel fired steam generators.

State Regulations for New and Existing Sources: All fifty states have regulations pertaining to fuel combustion for steam generators. West Virginia exempts sources less than 10 × 10^6 BTU/hour heat input. Other states such as Alaska and Maryland express their limitations as a concentration and as such are not directly comparable to the lbs/10^6 BTU/hr calculations expressed in Table I-4. Connecticut is representative of a restrictive limitation which does not distinguish boilers by size. A flat limitation of 0.2 lbs/10^6 BTU for existing sources and 0.10 lbs/10^6 BTU for new sources are the statuatory limitations. Louisiana is representative of a least restrictive limitation which does not distinguish boilers by size, 0.6 lbs/10^6 BTU. Table I-4 presents uncontrolled and controlled emissions and limitations for boilers of the 0.3-10 × 10^6 BTU/hr size range.

TABLE I-4

PARTICULATE EMISSIONS AND LIMITATIONS FROM .3-10 × 10^6 BTU/hr BOILERS

Type of Boiler and Control	Fuel	% Control	Emissions		Limitations[a] lbs/10^6 BTU / g/10^6 cal		
			lbs/10^6 BTU	g/10^6 cal	Conn Exc	Conn New	Louisiana
Cast iron	Coal	0	1.54	2.77	0.2/0.36	0.10/0.18	0.6/1.08
Cast iron and dry cyclone	Coal	94	0.231	0.105	0.2/0.36	0.10/0.18	0.6/1.08
Cast iron and wet scrubber	Coal	98	0.031	0.056	0.2/0.36	0.10/0.18	0.6/1.08
Cast iron and electric precipitator	Coal	99	0.015	0.027	0.2/0.36	0.10/0.18	0.6/1.08
Cast iron and fabric filter	Coal	99.5	0.008	0.014	0.2/0.36	0.10/0.18	0.6/1.08
Cast iron	Distillate oil	0	0.108	0.195	0.2/0.36	0.10/0.18	0.6/1.08
Cast iron	Residual oil	0	0.103	0.186	0.2/0.36	0.10/0.18	0.6/1.08
Cast iron	Natural gas	0	0.017	0.031	0.2/0.36	0.10/0.18	0.6/1.08
Firetube	Coal	0	1.54	2.77	0.2/0.36	0.10/0.18	0.6/1.08
Firetube and dry cyclone	Coal	94	0.231	0.105	0.2/0.36	0.10/0.18	0.6/1.08
Firetube and wet scrubber	Coal	98	0.031	0.056	0.2/0.36	0.10/0.18	0.6/1.08
Firetube and electric precipitator	Coal	99	0.015	0.027	0.2/0.36	0.10/0.18	0.6/1.08
Firetube and fabric filter	Coal	99.5	0.008	0.014	0.2/0.36	0.10/0.18	0.6/1.08
Firetube	Distillate oil	0	0.108	0.195	0.2/0.36	0.10/0.18	0.6/1.08
Firetube	Residual oil	0	0.103	0.186	0.2/0.36	0.10/0.18	0.6/1.08
Firetube	Natural gas	0	0.017	0.031	0.2/0.36	0.10/0.18	0.6/1.08

Potential Source Compliance and Emissions Limitations: There is a wide range of boiler particulate emissions and the limitation imposed by the least restrictive to the most restrictive state regulation. Table I-4A summarizes the percent control necessary to achieve compliance in states that have limitations equal to Connecticut's 0.1 lbs/10^6 BTU and Louisiana's 0.6 lbs/10^6 BTU.

TABLE I-4A

COMPILATION OF CONTROL REQUIREMENTS FOR BOILERS .3-10 x 10^6 BTU/hr

Boiler Type	Fuel	Connecticut (new)	Louisiana
Cast Iron	Coal	94%	61%
Firetube	Coal	94%	61%

Table I-4A indicates that 94% control is required for the most restrictive regulation, and current technology is sufficient to control cast iron coal and firetube units of the 0.3-10 x 10^6 BTU/hr size range.

The Environment Reporter was used to update emission limitations.

G. References:

To develop the information presented in this section concerning boilers .3-10 x 10^6 BTU/hr the following references were used:

1. Background Information for Establishment of National Standards of Performance for New Sources - Industrial Size Boilers, Walden Research Corporation, EPA Contract No. CPA70-165, Task Order No. 5, June 30, 1971.
2. Systematic Study of Air Pollution from Intermediate-sized Fossil Fuel Combustion Equipment, Walden Research Corporation, EPA Contract No. CPA22-69-85, July, 1971.
3. Impact of New Source Performance Standards on 1985 National Emissions from Stationary Sources, Volume 2, Emission Factors for Boilers.
4. Analysis of Final State Implementation Plans - Rules and Regulations, EPA, Contract 68-02-0248, July, 1972, Mitre Corporation.

References that were not used directly in the development of the information for this section but could provide qualitative background for other uses and were reviewed include:

5. Air Pollution Engineering Manual, Second Edition, EPA, May, 1973.
6. Combustion Engineering, Glen R. Tryling, published by Combustion Engineering, Inc., 277 Park Avenue, New York, New York 10017; 1966.

A. Source Category: I External Combustion

B. Sub Category: Boilers 10-250 x 10^6 BTU/hr

C. Source Description:

Boilers in the 10-250 x 10^6 BTU/hr size range are of the water tube type, utilizing coal, oil, or natural gas. Water tube boilers comprise the bulk of industrial and almost half of all the utility boilers. Generally the smallest industrial boilers are of the firetube design with large water tube boilers providing up to 10,000,000 lbs (4,500,000 kg) per hour of steam. (1)2-3 Industry associations have categorized water tube boilers in four size classes as outlined in Table I-5. (1)3-8

TABLE I-5

CLASSIFICATION AND CAPACITY OF WATER TUBE BOILERS

Boiler Type	Typical Rated Capacity Range Steam		Source Class	Size Input
	lbs/hr	kg/hr	10^6 BTU/hr	10^6 cal/hr
Water tube-1	10000-100000	4536-45359	10-250	2520-63000
Water tube-2	100001-250000	45359.6-113398	10-250	2520-63000
Water tube-3	250001-500000	113398.5-226796	>250	>63000
Water tube-4	>500000	>226796	>250	>63000

Virtually all of the water tube-1 group are packaged units, shop assembled and shipped in one piece by trailer or flat car. The balance of the middle capacity range and all of the larger units are field assembled units. Today almost all of the coal firing units are the field erected water tube design with gas and/or oil as a possible alternative fuel for any of the categories. Coal firing is accomplished by one of the following methods: (2)A-14

1. Pulverized
2. Cyclone
3. Overfeed stoker
4. Spreader stoker
5. Underfeed stoker

For industrial size boilers (water tube-1 and water tube-2) stoker firing is the most common while the larger sizes (water tube-3 and water tube-4) pulverized firing is the most common.

D. Emission Rates:

Particulate emissions result from the stacks of the boilers burning coal, oil, or natural gas. Improper maintenance or poor startup procedures can cause excessive smoke and poor economy of operation. Table I-5A shows the type of boiler and control, type of fuel, the size of the boiler, the percentage of control that can be expected with a cyclone scrubber, electrostatic precipitator and fabric filter and the emission rate in pounds per million BTU and grams per million calories. (1)4-2,3,4, (3)11 Other combinations of control equipment are possible with both higher and lower efficiencies.

PARTICULATE EMISSIONS FROM 10-250 x 10^6 BTU/hr BOILERS

Type of Boiler and Control	Type of Fuel	% Control	Emissions lbs/10^6 BTU	Emissions g/10^6 cal
Water Tube-1	Natural Gas	0	0.017	0.031
Water Tube-1	Residual Oil	0	0.103	0.185
Water Tube-1	Distillate Oil	0	0.108	0.195
Water Tube-1, Spreader Stoker, Underfired	Coal*	0	1.55	2.79
Water Tube-1, Spreader Stoker, Underfired with Cyclone	Coal*	85	0.233	0.105
Water Tube-1, Spreader Stoker, Underfired with Scrubber	Coal*	98	0.031	0.056
Water Tube-1, Spreader Stoker, Underfired with Electrostatic Precipitator	Coal*	99	0.016	0.029
Water Tube-1, Spreader Stoker, Underfired with Fabric Filter	Coal*	99.5	0.008	0.014
Water Tube-1, Overfired	Coal*	0	4.55	8.20
Water Tube-1, Overfired with Cyclone	Coal*	85	0.683	0.102
Water Tube-1, Overfired with Scrubber	Coal*	98	0.091	0.164
Water Tube-1, Overfired with Electrostatic precipitator	Coal*	99	0.046	0.083
Water Tube-1, Overfired with Fabric Filter	Coal*	99.5	0.023	0.041
Water Tube-2	Natural Gas	0	0.014	0.026
Water Tube-2	Residual Oil	0	0.066	0.119
Water Tube-2	Distillate Oil	0	0.108	0.195
Water Tube-2, Spreader Stoker, Underfired	Coal*	0	1.55	2.99
Water Tube-2, Spreader Stoker, Underfired with Cyclone	Coal*	85	0.233	0.105
Water Tube-2, Spreader Stoker, Underfired with Scrubber	Coal*	98	0.031	0.056
Water Tube-2, Spreader Stoker, Underfired with Electrostatic Precipitator	Coal*	99	0.016	0.029
Water Tube-2, Spreader Stoker, Underfired with Fabric Filter	Coal*	99.5	0.008	0.014
Water Tube-2, Overfired	Coal*	0	4.03	7.26
Water Tube-2, Overfired with Cyclone	Coal*	85	0.605	0.274
Water Tube-2, Overfired with Scrubber	Coal*	98	0.008	0.014
Water Tube-2, Overfired with Electrostatic Precipitator	Coal*	99	0.040	0.072
Water Tube-2, Overfired w/Fabric Filter	Coal*	99.5	0.020	0.036
Water Tube-2, Cyclone	Coal*	0	6.20	11.17
Water Tube-2, Cyclonic with Cyclone	Coal*	85	0.930	0.422
Water Tube-2, Cyclonic with Scrubber	Coal*	98	0.124	0.223
Water Tube-2, Cyclonic with Electrostatic Precipitator	Coal*	99	0.062	0.112
Water Tube-2, Cyclonic with Fabric Filter	Coal*	99.5	0.031	0.056
Water Tube-2, Pulverized	Coal*	0	4.96	8.94
Water Tube-2, Pulverized with Cyclone	Coal*	85	0.744	0.337
Water Tube-2, Pulverized with Scrubber	Coal*	98	0.099	0.178
Water Tube-2 Pulverized with Electrostatic Precipitator	Coal*	99	0.050	0.090
Water Tube-2, Pulverized with Fabric Filter	Coal*	99.5	0.025	0.045

*Assume 8.1% ash

E. Control Equipment:

Many of the industrial and commercial applications of water tube boilers have control equipment to reduce particulate emissions. The four most common methods are:

1. dry cyclone,
2. wet scrubber,
3. electrostatic precipitator, and
4. baghouse.

Dry cyclones can achieve up to 94% efficiency under typical water tube boiler outlet conditions, but 60% to 85% efficieicies are more common. Wet scrubbers can achieve 98% efficiency under typical water tube boiler outlet conditions and offer the advantage of some sulfur dioxide removal. However, wet scrubbers require higher capital investment and higher operating costs. Electrostatic precipitators are the most common control device for water tube boilers and can attain efficiencies of more than 99.5% depending on number, size and voltage of the plates. Most modern high efficiency electrostatic precipitators are designed to operate in the 97% to 99% range. Baghouses often have efficiencies of 99.5 percent but are sensitive to the high temperatures found in water tube boiler exhaust. [1] 4-4

F. New Source Performance Standards and Regulation Limitations:

New Source Performance Standards (NSPS): On December 23, 1971, EPA promulgated New Source Performance Standards for fossil fuel fired steam generators. However, these standards only pertain to steam generating units greater than 250 million BTU's per hour heat input. As such, boilers of 10-250 x 10^6 BTU/hr heat input described in Section D are controlled by individual state regulations for fossil fuel fired steam generators.

State Regulations for New and Existing Sources: All fifty states have regulations pertaining to fuel combustion for steam generators. Florida is one of the few states that has no numerical limitation for boilers less than 250 x 10^6 BTU/hr, rather the regulation states to use the latest technology. Other states such as Alaska and Maryland express their limitations as a concentration and as such are not directly comparable to the lbs/10^6 BTU calculation expressed in Table I-8. Connecticut is representative of a restrictive limitation which does not distinguish boilers by size. A flat limitation of 0.2 lbs/10^6 BTU for existing sources and 0.10 lbs/10^6 BTU for new sources are the statuatory limitations. Louisiana is representative of a least restrictive limitation which does not distinguish boilers by size, 0.6 lbs/10^6 BTU. Washington D.C. is representative of states that have a decreasing limitation for boilers between 1-10,000 x 10^6 BTU/hr, 0.13 lbs/10^6 BTU to 0.02 lbs/10^6 BTU respectively. Table I-6 presents controlled and uncontrolled particulate emissions and limitations for boilers between 10-250 x 10^6 BTU/hr.

TABLE I-6

PARTICULATE EMISSIONS AND LIMITATIONS FROM BOILERS 10-250 x 10^6 BTU/HR

Type of Boiler and Control	Type of Fuel	% Control	Emissions lbs/10^6 BTU	Emissions g/10^6 cal	Limitations* lbs/10^6 BTU / g/ [illegible] (New)	Limitations* [illegible] (Existing)	[illegible]
Water Tube-1	Natural gas	0	0.017	0.031	0.1/0.18	0.2/0.36	0.6/1.08
Water Tube-1	Residual Oil	0	0.103	0.185	0.1/0.18	0.2/0.36	0.6/1.08
Water Tube-1	Distillate Oil	0	0.108	0.195	0.1/0.18	0.2/0.36	0.6/1.08
Water Tube-1, Spreader Stoker, Underfired	Coal*	0	1.55	2.79	0.1/0.18	0.2/0.36	0.6/1.08
Water Tube-1, Spreader Stoker, Underfired with Cyclone	Coal*	85	0.233	0.105	0.1/0.18	0.2/0.36	0.6/1.08
Water Tube-1, Spreader Stoker, Underfired with Scrubber	Coal*	98	0.031	0.056	0.1/0.18	0.2/0.36	0.6/1.08
Water Tube-1, Spreader Stoker, Underfired with Electrostatic Precipitator	Coal*	99	0.016	0.029	0.1/0.18	0.2/0.36	0.6/1.08
Water Tube-1, Spreader Stoker, Underfired with Fabric Filter	Coal*	99.5	0.008	0.014	0.1/0.18	0.2/0.36	0.6/1.08
Water Tube-1, Overfired	Coal*	0	4.55	8.20	0.1/0.18	0.2/0.36	0.6/1.08
Water Tube-1, Overfired with Cyclone	Coal*	85	0.683	0.102	0.1/0.18	0.2/0.36	0.6/1.08
Water Tube-1, Overfired with Scrubber	Coal*	98	0.091	0.164	0.1/0.18	0.2/0.36	0.6/1.08
Water Tube-1, Overfired with Electrostatic precipitator	Coal*	99	0.046	0.083	0.1/0.18	0.2/0.36	0.6/1.08
Water Tube-1, Overfired with Fabric Filter	Coal*	99.5	0.023	0.041	0.1/0.18	0.2/0.36	0.6/1.08
Water Tube-2	Natural Gas	0	0.014	0.026	0.1/0.18	0.2/0.36	0.6/1.08
Water Tube-2	Residual Oil	0	0.066	0.119	0.1/0.18	0.2/0.36	0.6/1.08
Water Tube-2	Distillate Oil	0	0.108	0.195	0.1/0.18	0.2/0.36	0.6/1.08
Water Tube-2, Spreader Stoker, Underfired	Coal*	0	1.55	2.99	0.1/0.18	0.2/0.36	0.6/1.08
Water Tube-2, Spreader Stoker, Underfired with Cyclone	Coal*	85	0.233	0.105	0.1/0.18	0.2/0.36	0.6/1.08
Water Tube-2, Spreader Stoker, Underfired with Scrubber	Coal*	98	0.031	0.056	0.1/0.18	0.2/0.36	0.6/1.08
Water Tube-2, Spreader Stoker, Underfired with Electrostatic Precipitator	Coal*	99	0.016	0.029	0.1/0.18	0.2/0.36	0.6/1.08
Water Tube-2, Spreader Stoker, Underfired with Fabric Filter	Coal*	99.5	0.008	0.014	0.1/0.18	0.2/0.36	0.6/1.08
Water Tube-2, Overfired	Coal*	0	4.03	7.26	0.1/0.18	0.2/0.36	0.6/1.08
Water Tube-2, Overfired with Cyclone	Coal*	85	0.605	0.274	0.1/0.18	0.2/0.36	0.6/1.08
Water Tube-2, Overfired with Scrubber	Coal*	98	0.008	0.014	0.1/0.18	0.2/0.36	0.6/1.08
Water Tube-2, Overfired with Electrostatic Precipitator	Coal*	99	0.040	0.072	0.1/0.18	0.2/0.36	0.6/1.08
Water Tube-2, Overfired w/Fabric Filter	Coal*	99.5	0.020	0.036	0.1/0.18	0.2/0.36	0.6/1.08
Water Tube-2, Cyclone	Coal*	0	6.20	11.17	0.1/0.18	0.2/0.36	0.6/1.08
Water Tube-2, Cyclonic with Cyclone	Coal*	85	0.930	0.422	0.1/0.18	0.2/0.36	0.6/1.08
Water Tube-2, Cyclonic with Scrubber	Coal*	98	0.124	0.223	0.1/0.18	0.2/0.36	0.6/1.08
Water Tube-2, Cyclonic with Electrostatic Precipitator	Coal*	99	0.062	0.112	0.1/0.18	0.2/0.36	0.6/1.08
Water Tube-2, Cyclonic with Fabric Filter	Coal*	99.5	0.031	0.056	0.1/0.18	0.2/0.36	0.6/1.08
Water Tube-2, Pulverized	Coal*	0	4.96	8.94	0.1/0.18	0.2/0.36	0.6/1.08
Water Tube-2, Pulverized with Cyclone	Coal*	85	0.744	0.337	0.1/0.18	0.2/0.36	0.6/1.08
Water Tube-2, Pulverized with Scrubber	Coal*	98	0.099	0.178	0.1/0.18	0.2/0.36	0.6/1.08
Water Tube-2 Pulverized with Electrostatic Precipitator	Coal*	99	0.050	0.090	0.1/0.18	0.2/0.36	0.6/1.08
Water Tube-2, Pulverized with Fabric Filter	Coal*	99.5	0.025	0.045	0.1/0.18	0.2/0.36	0.6/1.08

*Assume 8.1% ash

Potential Source Compliance and Emission Limitations: There is a wide range of boiler particulate emissions and the limitations imposed by the least restrictive to the most restrictive state regulations. Table I-6A summarizes the percent control necessary to achieve compliance with a typical restrictive limitation (Connecticut's) and with the New Source Performance Standard.

TABLE I-6A

COMPILATION OF CONTROL REQUIREMENTS FOR BOILERS 10-250 × 10^6 BTU/hr

Boiler Type	Fuel	Conn. (New)	Louisiana
Water Tube-1, Spreader Stoker, Underfired	Coal*	94%	61%
Water Tube-1, Overfired	Coal*	98%	87%
Water Tube-2, Spreader Stoker, Underfired	Coal*	94%	61%
Water Tube-2, Overfired	Coal*	98%	85%
Water Tube-2, Cyclonic	Coal*	98%	90%
Water Tube-2, Pulverized	Coal*	98%	88%

*Assume 8.1% ash

Table I-6A indicates that 98% control is required for the most restrictive regulation, and current technology is sufficient to control water tube-1 and water tube-2 coal units using coal that contains 8.1% ash.

The Environment Reporter was used to update the emission limitations.

G. References

To develop the information presented in this section concerning boilers, 10-250 x 10^6 BTU/hr the following references were used.

1. Background Information for Establishment of National Standards of Performance for New Sources - Industrial Size Boilers, Walden Research Corporation, EPA Control No. CAP70-165, Task Order No. 5, June 30, 1971.
2. Systematic Study of Air Pollution from Intermediate-sized Fossil Fuel Combustion Equipment, Walden Research Corporation, EPA Contract No. CPA22-69-85, July, 1971.
3. Impact of New Source Performance Standards on 1985 National Emissions from Stationary Sources, Volume 3, Emission Factors for Boilers.
4. Analysis of Final State Implementation Plans - Rules and Regulations, EPA Contract 68-02-0248, July, 1972, Mitre Corporation.

References that were not used directly in the development of the information for this section but could provide qualitative background for other uses and were reviewed include:

5. Air Pollution Engineering Manual, Second Edition, EPA, May, 1973.
6. Combustion Engineering, Glen R. Tryling, published by Combustion Engineering, Inc., 277 Park Avenue, New York, New York 10017; 1966.

A. Source Category: I External Combustion

B. Sub Category: Boilers >250 x 10^6 BTU/hr

C. Source Description:

Boilers in the >250 x 10^6 BTU/hr size range are always of the water tube type utilizing coal, oil, or natural gas. Water tube boilers of this size comprise the bulk of industrial boilers and almost all of the utility boilers. Water tube boilers usually range in size from about 10,000 lbs steam/hr (4500 kg/hr) to 10,000,000 lbs steam/hour (4,500,000 kg/hr).(1)2-3 Table I-7 categorizes water tube boilers in four size classes in accordance with with industry associations.

TABLE I-7

CLASSIFICATION AND CAPACITY OF WATER TUBE BOILERS

Boiler Type	Typical Rated Capacity Steam		Source Class Size	
	lbs/hr	kg/hr	10^6 BTU/hr	10^6 cal/hr
Water tube-1	10000-100000	4536-45359	10-250	2520-63000
Water tube-2	100001-250000	45359.6-113398	20-250	2520-63000
Water tube-3	250001-500000	113398.5-226796	>250	>63000
Water tube-4	>500000	>226796	>250	>63000

Virtually all of the water tube-1 group are packaged units, shop assembled and shipped in one piece by trailer or flat car. The balance of the middle capacity range and all of the larger units are field assembled units. Today almost all of the coal firing units are field erected water tube design with gas and/or oil as a possible operating fuel for any of the categories. Coal firing is accomplished by one of the following methods:(2)A-14

A. Pulverized
B. Cyclone
C. Overfeed stoker
D. Spreader stoker
E. Underfeed stoker

Coal firing industrial sized boilers (typically water tube-1 and water tube-2) stoker firing is most common, while the larger coal sizes (typically water tube-3) pulverized firing is most common. Water tube-4 is typically all pulverized firing.

D. Emission Rates:

Particulate emissions result from stacks of boilers burning coal, oil, or natural gas. Improper maintenance can cause excessive smoke and poor economy of operation. Table I-7A presents emission rates in pounds per million BTU, type of boiler and control, and a typical control efficiency of a cyclone, scrubber, electrostatic precipitator and a fabric filter. (1)4-2,3,4(3)20 Other combinations of control equipment are possible with both higher and lower efficiencies. It should also be noted that coal fired water tube-4 always uses pulverized firing.

TABLE I-7A

PARTICULATE EMISSIONS FROM >250 x 10^6 BTU/hr BOILERS

Type of Boiler and Control	Type of Fuel	% Control	Emissions lbs/10^6 BTU	Emissions g/10^6 cal
Water Tube-3	Natural Gas	0	0.014	0.025
Water Tube-3	Residual Oil	0	0.066	0.119
Water Tube-3	Distillate Oil	0	0.108	0.194
Water Tube-3, Spreader Stoker, Underfired	Coal[a]	0	1.55	2.79
Water Tube-3, spreader stoker, underfired with cyclone	Coal[a]	85	0.233	0.105
Water Tube-3, Spreader Stoker, Underfired with scrubber	Coal[a]	98	0.031	0.056
Water Tube-3, Spreader Stoker, Underfired with electrostatic precipitator	Coal[a]	99	0.016	0.029
Water Tube-3, Spreader Stoker, Underfired with fabric filter	Coal	99.5	0.078	0.140
Water Tube-3, Overfired	Coal[a]	0	4.03	7.25
Water Tube-3, Overfired with Cyclone	Coal[a]	85	0.605	0.274
Water Tube-3, Overfired with scrubber	Coal[a]	98	0.081	0.146
Water Tube-3, Overfired with electrostatic precipitator	Coal[a]	99	0.040	0.072
Water Tube-3, Overfired with Fabric Filter	Coal[a]	99.5	0.020	0.036
Water Tube-3, Cyclonic	Coal[a]	0	6.20	11.16
Water Tube 3, Cyclonic with Cyclone	Coal[a]	85	0.930	0.422
Water Tube-3, Cyclonic with Scrubber	Coal[a]	98	0.124	0.223
Water Tube-3, Cyclonic with Electrostatic Precipitator	Coal[a]	99	0.062	0.112
Water Tube-3, Cyclonic with Fabric Filter	Coal[a]	99.5	0.031	0.056
Water Tube-3, Pulverized	Coal[a]	0	4.96	8.98
Water Tube-3, Pulverized with Cyclone	Coal[a]	85	0.744	0.337
Water Tube-3, Pulverized with Scrubber	Coal[a]	98	0.099	0.178
Water Tube-3, Pulverized with Electrostatic Precipitator	Coal[a]	99	0.050	0.090
Water Tube-3, Pulverized with Fabric Filter	Coal[a]	99.5	0.025	0.045
Water Tube-4	Natural Gas	0	0.014	0.025
Water Tube-4	Residual Gas	0	0.066	0.119
Water Tube-4	Distillate Oil	0	0.108	0.194
Water Tube-4, Pulverized	Coal[a]	0	4.96	8.93
Water Tube-4, Pulverized with Cyclone	Coal[a]	85	0.744	0.337
Water Tube-4, Pulverized with Scrubber	Coal[a]	98	0.099	0.178
Water Tube-4, Pulverized with Electrostatic Precipitator	Coal[a]	99	0.050	0.090
Water Tube-4, Pulverized with Fabric Filter	Coal[a]	99.5	0.025	0.045

[a]Assumes 8.1% ash

E. Control Equipment:

Many of the industrial and commercial applications of water tube boilers have control equipment installed to reduce particulate emissions. The four most common methods are:

1. dry cyclone,
2. wet scrubber,
3. electrostatic precipitator, and
4. baghouse.

Dry cyclones can achieve up to 94% efficiency under typical water tube boiler outlet conditions, but 60% to 85% efficiencies are more common. Wet scrubbers can achieve 98% efficiency under typical water tube boiler outlet conditions and offer the advantage of some sulfur dioxide removal. However, wet scrubbers require higher capital investment and higher operating costs. Electrostatic precipitators are the most common control device for water tube boilers and can attain efficiencies of more than 99.5% depending on number, size, and voltage of the plates. Most modern high efficiency electrostatic precipitators are designed to operate in the 97% to 99% range. Baghouses often have efficiencies of 99.5 percent but are sensitive to the high temperatures found in water tube boiler exhaust. (1)4-4

F. New Source Performance Standards and Regulation Limitations:

New Source Performance Standards (NSPS): On December 23, 1971, EPA promulgated New Source Performance Standards for fossil fuel fired steam generators. These standards pertain to steam generating units greater than 250 million BTU's per hour heat input. Boilers of greater than 250 x 10^6 BTU/hr heat input described in Section D are covered by NSPS of 0.1 lbs/10^6 BTU heat input (0.18 g/10^6 cal) and individual state regulations.

State Regulations for New and Existing Sources: All fifty states have regulations pertaining to fuel combustion for steam generators. Some states such as Alaska and Maryland express their limitations as a concentration and as such are not directly comparable to the lbs/10^6 BTU calculation expressed in Table I-8. Louisiana is representative of a least restrictive limitation which does not distinguish boilers by size, 0.6 lbs/10^6 BTU. New Mexico is representative of a restrictive limitation both by type of boiler and existing boiler versus a new boiler. For existing boilers, New Mexico has a variable emission limitation for boilers (coal) in the 10-1000 x 10^6 BTU range of 0.56 lbs/10^6 BTU to 0.135 lbs/10^6 BTU. For boilers 250 x 10^6 BTU the limitation is 0.265 lbs/10^6 BTU. For coal fired boilers installed after July 31, 1977, greater than 250 x 10^6 BTU/hr the limitation is 0.05 lbs/10^6 BTU. For oil fired boilers installed after July 31, 1977 greater than 1,000,000 x 10^6 BTU/hr the limitation is 0.005 lbs/10^6 BTU. Table I-8 presents controlled and uncontrolled emissions and limitations for boilers greater than 250 x 10^6 BTU/hour heat input.

TABLE I-8

PARTICULATE EMISSIONS AND LIMITATIONS FROM BOILERS >250 x 10^6 BTU/hr

Type of Boiler and Control	Type of Fuel	% Control	Emissions lbs/10^6 BTU	Emissions g/10^6 cal	Limitations[b] lbs/10^6 BTU / g/10^6 cal NSPS	Limitations[b] lbs/10^6 BTU / g/10^6 cal New Mexico (new)	Limitations[b] lbs/10^6 BTU / g/10^6 cal Louisiana
Water Tube-3	Natural Gas	0	0.014	0.025	0.1/0.18	0.005/0.009	0.6/1.08
Water Tube-3	Residual Oil	0	0.066	0.119	0.1/0.18	0.005/0.009	0.6/1.08
Water Tube-3	Distillate Oil	0	0.108	0.194	0.1/0.18	0.005/0.009	0.6/1.08
Water Tube-3, Spreader Stoker, Underfired	Coal*	0	1.55	2.79	0.1/0.18	0.05 /0.09	0.6/1.08
Water Tube-3, spreader stoker, underfired with cyclone	Coal*	85	0.233	0.105	0.1/0.18	0.05 /0.09	0.6/1.08
Water Tube-3, Spreader Stoker, Underfired with scrubber	Coal*	98	0.031	0.056	0.1/0.18	0.05 /0.09	0.6/1.08
Water Tube-3, Spreader Stoker, Underfired with electrostatic precipitator	Coal*	99	0.016	0.029	0.1/0.18	0.05 /0.09	0.6/1.08
Water Tube-3, Spreader Stoker, Underfired with fabric filter	Coal	99.5	0.078	0.140	0.1/0.18	0.05 /0.09	0.6/1.08
Water Tube-3, Overfired	Coal*	0	4.03	7.25	0.1/0.18	0.05 /0.09	0.6/1.08
Water Tube-3, Overfired with Cyclone	Coal*	85	0.605	0.274	0.1/0.18	0.05 /0.09	0.6/1.08
Water Tube-3, Overfired with scrubber	Coal*	98	0.081	0.146	0.1/0.18	0.05 /0.09	0.6/1.08
Water Tube-3, Overfired with electrostatic precipitator	Coal*	99	0.040	0.072	0.1/0.18	0.05 /0.09	0.6/1.08
Water Tube-3, Overfired with Fabric Filter	Coal*	99.5	0.020	0.036	0.1/0.18	0.05 /0.09	0.6/1.08
Water Tube-3, Cyclonic	Coal*	0	6.20	11.16	0.1/0.18	0.05 /0.09	0.6/1.08
Water Tube 3, Cyclonic with Cyclone	Coal*	85	0.930	0.422	0.1/0.18	0.05 /0.09	0.6/1.08
Water Tube-3, Cyclonic with Scrubber	Coal*	98	0.124	0.223	0.1/0.18	0.05 /0.09	0.6/1.08
Water Tube-3, Cyclonic with Electrostatic Precipitator	Coal*	99	0.062	0.112	0.1/0.18	0.05 /0.09	0.6/1.08
Water Tube-3, Cyclonic with Fabric Filter	Coal*	99.5	0.031	0.056	0.1/0.18	0.05 /0.09	0.6/1.08
Water Tube-3, Pulverized	Coal*	0	4.96	8.98	0.1/0.18	0.05 /0.09	0.6/1.08
Water Tube-3, Pulverized with Cyclone	Coal*	85	0.744	0.337	0.1/0.18	0.05 /0.09	0.6/1.08
Water Tube-3, Pulverized with Scrubber	Coal*	98	0.099	0.178	0.1/0.18	0.05 /0.09	0.6/1.08
Water Tube-3, Pulverized with Electrostatic Precipitator	Coal*	99	0.050	0.090	0.1/0.18	0.05 /0.09	0.6/1.08
Water Tube-3, Pulverized with Fabric Filter	Coal*	99.5	0.025	0.045	0.1/0.18	0.05 /0.09	0.6/1.08
Water Tube-4	Natural Gas	0	0.014	0.025	0.1/0.18	0.005/0.009	0.6/1.08
Water Tube-4	Residual Oil	0	0.066	0.119	0.1/0.18	0.005/0.009	0.6/1.08
Water Tube-4	Distillate Oil	0	0.108	0.194	0.1/0.18	0.005/0.009	0.6/1.08
Water Tube-4, Pulverized	Coal*	0	4.96	8.93	0.1/0.18	0.05 /0.09	0.6/1.08
Water Tube-4, Pulverized with Cyclone	Coal*	85	0.744	0.337	0.1/0.18	0.05 /0.09	0.6/1.08
Water Tube-4, Pulverized with Scrubber	Coal*	98	0.099	0.170	0.1/0.18	0.05 /0.09	0.6/1.08
Water Tube-4, Pulverized with Electrostatic Precipitator	Coal*	99	0.050	0.090	0.1/0.18	0.05 /0.09	0.6/1.08
Water Tube-4, Pulverized with Fabric Filter	Coal*	99.5	0.025	0.045	0.1/0.18	0.05 /0.09	0.6/1.08

*Assumes 8.1% ash

Potential Source Compliance and Emission Limitations: There is a wide range of boiler particulate emissions and the limitations imposed by the least restrictive to the most restrictive state regulations. Table I-8A summarizes the percent control necessary to achieve compliance with NSPS and New Mexico's 0.05 lbs/10^6 BTU limitation according to specific boiler type and fuel.

TABLE I-8A

COMPILATION OF CONTROL REQUIREMENTS FOR BOILERS >250 x 10^6 BTU

Boiler Type	Fuel	NSPS	New Mexico (new)
Water Tube-3	Resid oil	0%	92%
Water Tube-3	Dist oil	0%	95%
Water Tube-3, Spreader Stoker, Underfired	Coal*	94%	97%
Water Tube-3, Overfired	Coal*	98%	99%
Water Tube-3, Cyclonic	Coal*	98%	99%
Water Tube-3, Pulverized	Coal*	98%	99%
Water Tube-4	Resid oil	0%	92%
Water Tube-4	Dist oil	0%	95%
Water Tube-4, Pulverized	Coal*	98%	99%

*Assume 8.1% ash

The existing control technology is adequate to achieve change particulate limitations of even the most restrictive regulation.

The Environment Reporter was used to update emission limitations.

G. References

To develop the information presented in this section concerning boilers > 250 x 10^6 BTU/hr the following references were used:

1. Background Information for Establishment of National Standards of Performance for New Sources, Walden Research Corporation, EPA Contract No. CPA70-165, Task Order No. 5, June 30, 1971.

2. Systematic Study of Air Pollution from Intermediate-sized Fossil Fuel Combustion Equipment, Walden Research Corporation, EPA Contract No. CPA22-69-85, July, 1971.

3. Impact of New Source Performance Standards on 1985 National Emissions from Stationary Sources, Volume 3, Emission Factors for Boilers.

References that were not used directly in the development of the information for this section but could provide qualitative background for other uses and were reviewed include:

4. Analysis of Final State Implementation Plans - Rules and Regulations, EPA, Contract 68-02-0248, July, 1972, Mitre Corporation.

5. Air Pollution Engineering Manual, Second Edition, EPA, May, 1973.

6. Combustion Engineering, Glen R. Fryling, published by Combustion Engineering, Inc., 277 Park Avenue, New York, New York, 10017; 1966.

A. Source Category: II Solid Waste Disposal

B. Sub Category: Open Burning (Agricultural)

C. Source Description:

Disposal of agricultural wastes by open burning is imperative because refuse piles retain horticultural diseases and agricultural pests. Open burning is performed in many areas as a practical means of clearing the land of these wastes. Open burning is done in open drums or baskets and in large-scale open dumps or pits.

D. Emission Rates:

Emissions from burning straw and stubble consist of smoke and various gases. The principal gases emitted are hydrocarbons, carbon dioxide, carbon monoxide, and oxides of nitrogen. [1]91 The relatively low temperatures associated with open burning causes emission of large quantities of unburned particulates, carbon monoxide, and hydrocarbons, and suppress the emissions of nitrogen oxides. Annual hydrocarbon emissions from agricultural burning are listed by states for which the data was available.[1]5,9

Table II-1 presents hydrocarbon emissions from agricultural burning for 18 states.

TABLE II-1

HYDROCARBON EMISSIONS FROM AGRICULTURAL BURNING

State	Number of Acres Burned	tons/ Acre Burned	lbs Emission/ ton Refuse	kg Emission/ M ton Refuse	tons/ Year	M tons/ Year
Alabama	89,000	2	24	12	2,136	1,937
California	762,862	3	24	12	27,463	24,909
Delaware	210	10	24	12	25	23
Florida	265,000	7	24	12	22,260	20,190
Georgia	974,406	1	24	12	11,693	10,606
Hawaii	108,000	12	24	12	15,552	14,106
Idaho	11,849	2	24	12	284	258
Kansas	600,000	1	24	12	7,200	6,530
Louisiana	350,000	6	24	12	25,200	22,856
Maine	36,400	1	24	12	437	396
Maryland	1,500	5	24	12	90	82
Mississippi	340,170	2	24	12	8,164	7,405
Nevada	1,950	3	24	12	70	63
North Carolina	341,185	2	24	12	8,188	7,427
Oregon	264,170	2	24	12	6,340	5,750
Puerto Rico	78,791	8	24	12	7,564	6,861
Vermont	100	3	24	12	4	4
Washington	140,801	2	24	12	3,379	3,065

E. Control Equipment

Agricultural open burning is an uncontrolled pollution problem from the equipment application point of view. Impact from this type of operation can be minimized by burning on days of appropriate stability and wind direction.

F. New Source Performance Standards and Regulation Limitations:

New Source Performance Standards (NSPS): No New Source Performance Standards have been promulgated for agricultural burning.

State Regulations for Existing Sources: Most states have regulations prohibiting open burning. However a few states have such liberal exemptions that open burning can be used to dispose garbage and leaves on properties with less than four dwelling units. Agricultural burning is not restricted in any of the states. Some states require farmers to obtain a permit and others leave the exact timing of the burn up to the discretion of the local air pollution control officials.

The Environment Reporter was used to develop the information on open burning restrictions.

G. References:

Literature used to develop the information on open burning of agricultural wastes includes:

1. George Yamate and John Stockham, An Inventory of Emissions from Forest Wildfires, Forest Managed Burns and Agricultrual Burns

A. Source Category: II Solid Waste Disposal

B. Sub Category: Industrial/Commercial Incinerators

C. Source Description:

Industrial and commercial incinerators cover a broad range of size and type of material burned. Industrial and commercial incinerators are either single chamber or multiple chamber units capable of burning 50 lbs/hour to 4,000 lbs/hour of charged refuse.(1)2.1-2

The combustion of refuse originating from commercial and industrial establishments that is performed in a multiple chamber incinerator proceeds in two stages:

1. primary or solid fuel combustion in the ignititon chamber, and
2. secondary gaseous-phase combustion in the downdraft or mixing chamber and in the uppass expansion or combustion chamber.

The two basic types of multiple chamber incinerators are:

1. retort incinerator, and
2. in line incinerator.

Operational features that distinguish the retort design are:

1. The arrangement of the chambers causes the combustion gases to flow through 90-degree turns in both lateral and vertical directions.
2. The return flow of the gases permits the use of a common wall between the primary and secondary combustion stages.
3. Mixing chambers, flame ports, and curtain wall ports have length-to-width ratios of 1:1 to 2.4:1.

Operational features that distinguish in-line design are:

1. Flow of the combustion gases is straight through the incinerator with 90-degree turns only in the vertical direction.
2. The in-line arrangement is readily adaptable to installations that require separated spacing of the chambers for operating and maintenance.
3. All ports and chambers extend across the full width of the incinerator and are as wide as the ignition chamber. Length-to-width ratios of the flame port, mixing chamber, and curtain wall port flow cross sections range from 2:1 to 5:1.

Figures II-3 and II-4 are illustrations of retort multiple chamber incinerator and in-line multiple chamber incinerator, respectively.

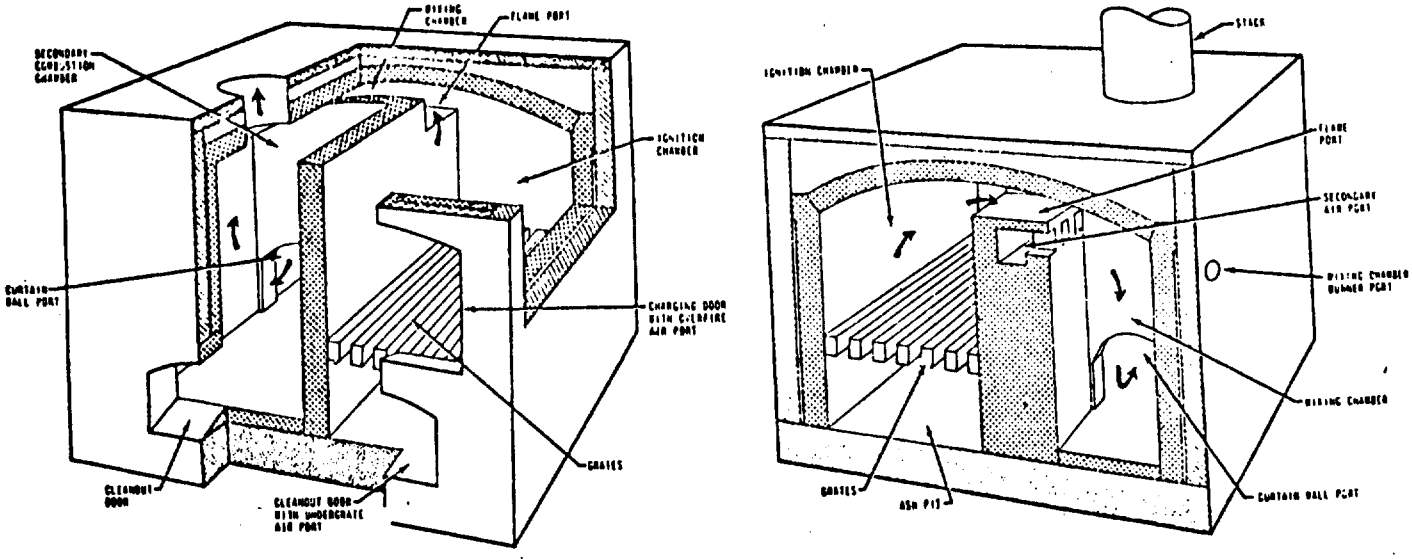

Figure II-3: Retort Multiple Chamber Incinerator

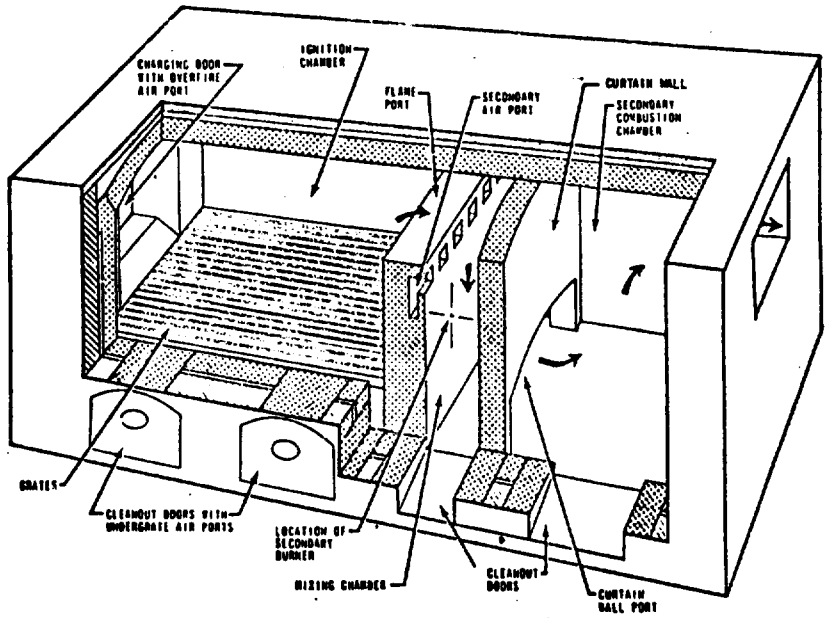

Figure II-4: In-Line Multiple Chamber Incinerator

In multiple chamber incinerators, gas from the primary chamber flows to a small secondary mixing chamber where more air is admitted and more complete oxidation occurs. As much as 300 percent excess air is supplied in order to promote oxidation of combustibles. Auxiliary burners are sometimes installed in the mixing chamber to increase the combustion temperature.(1)4.3-7-4.5-2

Single chamber units have capacities of 50 lbs/hr to 4,000 lbs/hr and are often equipped with automatic charging mechanisms, temperature controls, and movable grate systems.(2)2.1-2

D. Emission Rates:

Operating conditions, refuse composition, and basic incinerator design have a pronounced effect on emissions. The method by which air is supplied to the combustion chamber has the greatest effect of all design parameters on the quantity of particulate emissions. As underfire air is increased, an increase in fly-ash emission occurs. Erratic refuse charging causes a disruption of the combustion bed and a subsequent release of large quantities of particulates. Unconbusted particulate matter and carbon monoxide are emitted for an extended period after charging of batch-fed units because of interruptions in the combustion process. In continuously-fed units, particulate emissions are dependent upon grate type. Use of rotary kiln and reciprocating grates causes higher particulate emissions than use of rocking or traveling grates. Particulate emissions from commercial and industrial incinerators are presented in Table II-5.(2)2.1-3 Pounds per hour emission rates are based on a burning rate of 50 lbs/hr and 4,000 lbs/hr.

TABLE II-5

PARTICULATE EMISSIONS FROM INDUSTRIAL AND COMMERCIAL INCINERATORS

Type of Operation & Control	% Control	Emissions		Emission Rate (Based on 50 lbs/hr)		Emission Rate (Based on 4,000 lbs/hr)	
		lbs/ton	kg/M ton	lbs/hr	kg/hr	lbs/hr	kg/hr
Single Chamber, Uncontrolled	0	15	7.5	.38	.17	30.0	13.6
Single Chamber, with Settling Chamber and Water Spray	30-80	10.5-3.0	5.3-1.5	.26 -.08	.12 -.04	21.0-6.0	9.5-2.7
Single Chamber, with Settling Chamber, Water Spray, and Scrubber	80-95	3.0- .8	1.5- .4	.08 -.02	.04 -.009	6.0-1.6	2.7- .7
Single Chamber, with Settling Chamber, Water Spray, and Electrostatic Precipitator	90-96	1.5- .6	.8- .3	.04 -.02	.018-.009	3.0-1.2	1.4- .5
Single Chamber, with Settling Chamber, Water Spray, and Fabric Filter	97-99	.5- .2	.3- .1	.01 -.005	.005-.002	1.0- .4	.5- .2
Multiple Chamber, Uncontrolled	0	7	3.5	.2		14.0	6.4
Multiple Chamber, with Settling Chamber, Water Spray, and Mechanical Collector	30-80	4.9-1.4	2.5- .7	.1 -.04	.05 -.018	9.8-2.8	4.4-1.3
Multiple Chamber, with Settling Chamber, Water Spray, and Scrubber	80-95	1.4- .4	.7- .2	.04 -.01	.018-.005	2.8- .8	1.3- .4
Multiple Chamber, with Settling Chamber, Water Spray, and Electrostatic Precipitator	90-96	.7- .3	.4- .2	.02 -.008	.009-.004	1.4- .6	.6- .3
Multiple Chamber, with Settling Chamber, Water Spray, and Fabric Filter	97-99	.2- .07	.1- .04	.005-.002	.002-.001	.4- .14	.2- .06

E. Control Equipment:

Potential control equipment for municipal incinerators vary from a simple settling chamber to a fabric filter. Seven potential control methods and their efficiencies are:(1)2.1-4

1.	Settling Chamber:	0-30%
2.	Settling Chamber:	30-60%
3.	Wetted Baffles:	60%
4.	Mechanical Collector:	30-80%
5.	Scrubber:	80-95%
6.	Electrostatic Precipitator:	90-96%
7.	Fabric Filter:	97-99%

A settling chamber is least expensive of the control systems used on incinerators. It consists of a large refractory-lined chamber where flue gases are slowed to permit gravity settling of coarse materials. These chambers are supplemented by sprays to wet the walls, and the bottoms are wet (quiescent ponds) or sluiced (for fly-ash removal) to minimize reentrainment of settled ash.

The cyclone spins the gases as they move down the length of the unit, reversing flow, and leaving through an axial exit pipe. Because of the spin, the larger particles in the gas stream seek the outside of the gas stream, where they fall along the wall to a collection hopper.

Electrostatic precipitators apply separating force to the dust particles by the interaction of electrical charges placed upon the surface of the dust particles by which the dust-laden gas passes. Upon entering an ion-filled space, the dust particles receive a negative electrical charge and are moved toward the positively charged collecting plates. At predetermined intervals, the collecting plates are mechanically rapped in order to dislodge the layer of collected dust. The dust is collected in hoppers located beneath the electrode section of the precipitator.

Fabric filters are designed with tubes of woven fabric (cotton, wool, nylon, etc.) hung in frames equipped with shaking or deflating mechanisms for dust dislodgment. The mechanics of collection on fabric filters are highly complicated and include impingement, diffusion, electrostatics, and direct sieving. In order to assure satisfactory performance and long bag life, flue gas temperatures are controlled in the range of 250°-550°F. The temperature range may be more narrow depending upon the fabric and the flue gas composition.

There are many types of scrubbing devices for contacting liquids with gas streams for the purpose of removing particulate matter and gaseous pollutants. The three most common are:

1. wetted surfaces, i.e., systems of wetted pipes, baffles, or walls located in the off-gas duct;
2. devices for contacting the gas with a liquid spray, either in a spray-filled chamber or in a Venturi;
3. devices for bubbling the gas through a quantity of liquid (by ducting it below a liquid surface or by blowing it through impingement trays or through a packed column).

All of these devices humidify and cool the exhaust and produce a "steam" plume at the stack under some atmospheric conditions. Application of a higher pressure drop across a scrubber generally results in a higher degree of particulate removal. (2)VII-17-VII-48

F. New Source Performance Standards and Regulation Limitations:

New Source Performance Standards (NSPS): On December 23, 1971, EPA promulgated "New Source Performance Standards" for incinerators of more than 10 tons/day charging rate. The limitation is 0.08 grains/standard cubic foot corrected to 12 percent CO_2, maximum two-hour average.

State Regulations for New and Existing Sources: Particulate emission regulations for varying charging rates are expressed differently from state to state. Regulations applicable to new and existing incinerators are listed according to the basis of the limitation. The limitations are based on concentration, control efficiency, gas volume and charging rate.

Concentration Basis: States having regulations for new and existing incinerators expressed on a concentration basis are listed in Table II-6.

TABLE II-6

STATES HAVING REGULATIONS FOR NEW AND EXISTING SOURCES ON A CONCENTRATION BASIS

State	Capacity & Age	Limitation
Alaska	≤ 200 lbs/hr	0.3 gr/scf
	200-1000 lbs/hr	0.2 gr/scf
	> 1000 lbs/hr	0.1 gr/scf
Arkansas	≥ 200 lbs/hr	0.2 gr/scf
	< 200 lbs/hr	0.3 gr/scf
California	all sizes typical of all countries	0.3 gr/scf
Colorado	new	0.1 gr/scf
	existing	0.15 gr/scf
Connecticut	new	0.08 gr/scf
Florida	≥ 50 tons/day (new)	0.08 gr/scf
	≥ 50 tons/day (existing)	0.1 gr/scf
Georgia	≥ 50 tons/day	0.08 gr/scf
	≤ 50 tons/day	0.1 gr/scf
	existing before 1/1/72	0.2 gr/scf
Illinois	> 2000 lbs/hr	0.08 gr/scf
	≤ 2000 lbs/hr	0.02 gr/scf
	> 60,000 lbs/hr	0.05 gr/scf
	≤ 2000 lbs/hr (new)	0.10 gr/scf
Iowa	≥ 1000 lbs/hr	0.20 gr/scf
	< 1000 lbs/hr	0.35 gr/scf
Kentucky	> 50 tons/day	0.08 gr/scf
	≤ 50 tons/day	0.2 gr/scf
Louisiana	all sizes	0.2 gr/scf
Maryland	all sizes	0.03 gr/scf
Massachusetts	all sizes	0.1 gr/scf
Minnesota	< 200 lbs/hr	0.3 gr/scf
	200-2000 lbs/hr	0.2 gr/scf
	> 2000 lbs/hr	0.1 gr/scf
Mississippi	all sizes	0.2 gr/scf
	all sizes (new)	0.1 gr/scf
Missouri	≥ 200 lbs/hr (new)	0.2 gr/scf
	all others	0.3 gr/scf
Montana	≤ 200 lbs/hr (new)	0.3 gr/scf
	> 200 lbs/hr	0.2 gr/scf
	new sources	0.1 gr/scf
Nebraska	< 2000 lbs/hr	0.2 gr/scf
	≥ 2000 lbs/hr	0.1 gr/scf
New Hampshire	≤ 200 lbs/hr	0.3 gr/scf
	> 200 lbs/hr (new)	0.2 gr/scf
	> 50 tons/day	0.08 gr/scf
New Jersey	all sizes	0.1 gr/scf
Oregon	≤ 200 lbs/hr	0.3 gr/scf
	> 200 lbs/hr	0.2 gr/scf
	> 200 lbs/hr (new)	0.1 gr/scf
Pennsylvania	all sizes	0.1 gr/scf
Rhode Island	< 2000 lbs/hr	0.16 gr/scf
	≥ 2000 lbs/hr	0.08 gr/scf
Utah	> 50 tons/day	0.08 gr/scf
Virginia	all sizes	0.14 gr/scf
Washington	all sizes	0.1 gr/scf
Washington, D.C.	all sizes	0.08 gr/scf

Control Efficiency Basis: Utah requires processes to maintain 85% control efficiency over uncontrolled emissions.

Gas Volume Basis: Texas expresses particulate emission limitations in pounds/hour for specific stack flow rates. The Texas limits are:

10^3 to 10^4 acfm - 7.11 lbs/hr
10^4 to 10^5 acfm - 38.00 lbs/hr
10^5 to 10^6 acfm - 158.00 lbs/hr

Process Weight Rate Basis: Hawaii, Wyoming, South Dakota, Vermont and Nevada express incinerator limitations in pounds of emission per pounds of refuse charged. These limitations are listed below:

State	Emission Rate	Basis
Hawaii	.2 lbs	per 100 lbs refuse
Wyoming	.2 lbs	per 100 lbs refuse
South Dakota	.2 lbs	per 100 lbs refuse
Vermont	.1 lbs	per 1,000 lbs dry refuse
Nevada	3.0 lbs	per ton refuse if $\leq$ 2,000 lbs/hr

Potential Source Compliance and Emission Limitation: New Source Performance Standards limit emissions on a concentration basis, so no direct comparison with emissions in Table II-5 are made.

The Environment Reporter was used to update the emission limitations.

G. References:

Literature used to develop the information on industrial/commercial incinerators is listed below:

1. Compilation of Air Pollutant Emission Factors (Second Edition), EPA, Publication No. AP-42, March 1975.

2. Danielson, J. A., Air Pollution Engineering Manual, Second Edition, AP-40, Research Triangle Park, North Carolina, EPA, May 1973.

3. Systems Study of Air Pollution from Municipal Incineration, Volume I, Arthur D. Little, Inc., Contract No. CPA-22-69-23, March 1970.

The following references were consulted but not used directly to develop the information on municipal incinerators:

4. Brinkerhoff, Ronald J., Inventory of Intermediate-Size Incinerators in the United States - 1972, Pollution Engineering, November 1973.

5. Air Pollution Aspects of Emission Sources: Municipal Incineration, Air Pollution Control Office, Publication AP-92, Research Triangle Park, North Carolina, EPA, May 1971.

A. Source Category: II Solid Waste Disposal

B. Sub Category: Municipal Incinerators

C. Source Description:

The combustion of refuse originating from residences and commercial and industrial establishments is performed in a multiple-chamber incinerator. The process proceeds in two stages:

1. primary or solid fuel combustion in the ignition chamber, and
2. secondary gaseous-phase combustion in the downdraft or mixing chamber and in the uppass expansion or combustion chamber.

The two basic types of multiple chamber incinerators are:

1. retort incinerator, and
2. in-line incinerator.

Operational features that distinguish the retort design are:

1. The arrangement of the chambers causes the combustion gases to flow through 90-degree turns in both lateral and vertical directions.
2. The return flow of the gases permits the use of a common wall between the primary and secondary combustion stages.
3. Mixing chambers, flame ports, and curtain wall ports have length-to-width ratios of 1:1 to 2.4:1.

Operational features that distinguish in-line design are:

1. Flow of the combustion gases is straight through the incinerator with 90-degree turns only in the vertical direction.
2. The in-line arrangement is readily adaptable to installations that require separated spacing of the chambers for operating and maintenance.
3. All ports and chambers extend across the full width of the incinerator and are as wide as the ignition chamber. Length-to-width ratios of the flame port, mixing chamber, and curtain wall port flow cross sections range from 2:1 to 5:1.

Figures II-1 and II-2 are illustrations of retort multiple chamber incinerator and in-line multiple chamber incinerator, respectively.

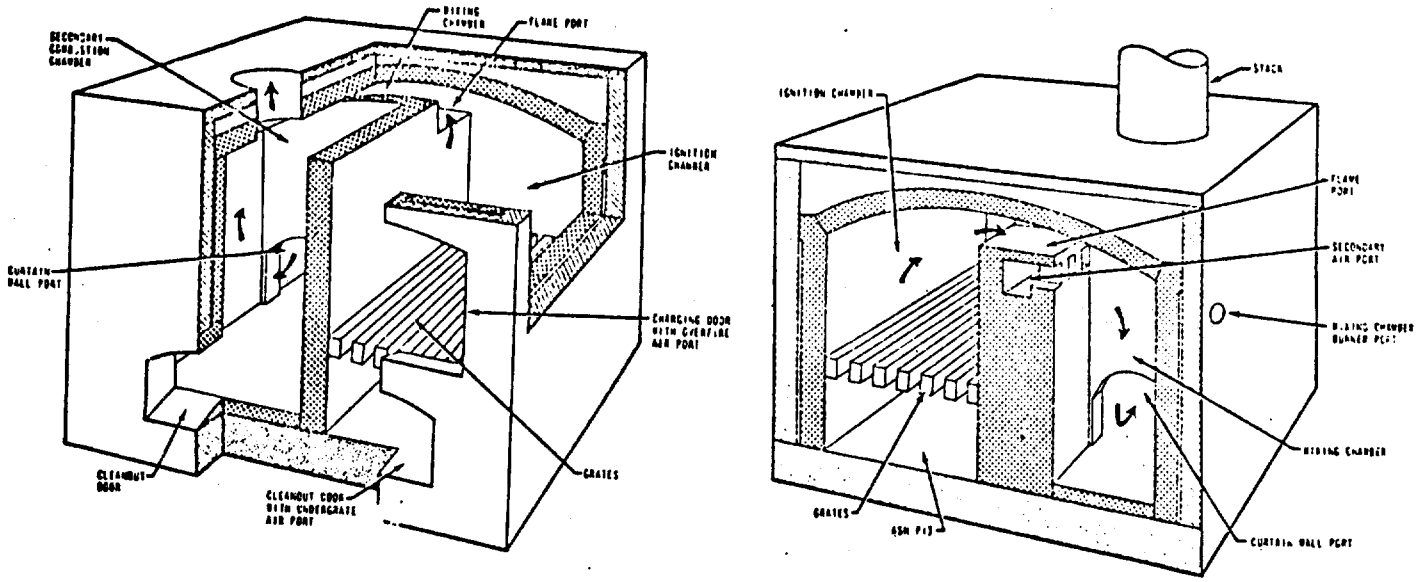

Figure II-1: Retort Multiple Chamber Incinerator

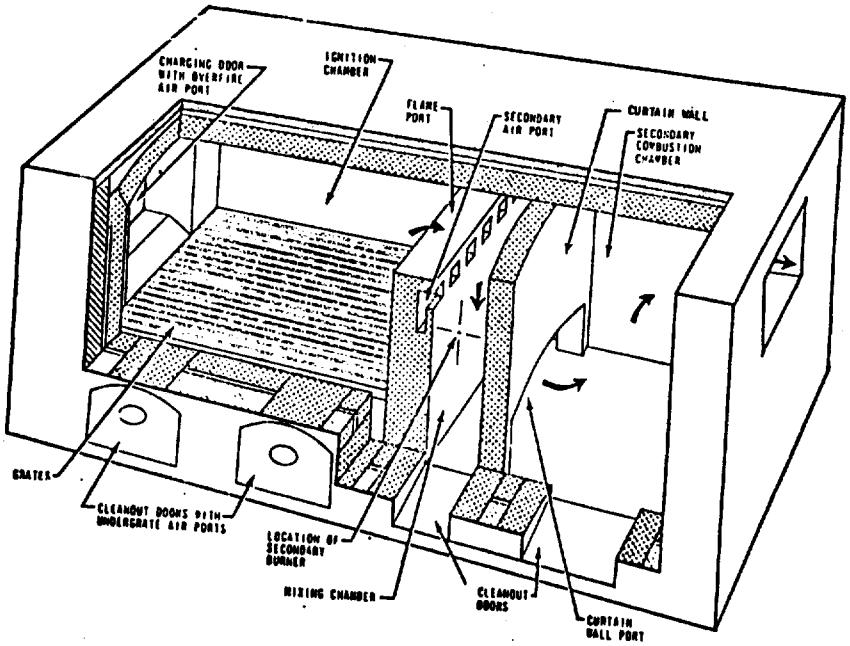

Figure II-2: In-Line Multiple Chamber Incinerator

In multiple chamber incinerators, gas from the primary chamber flows to a small secondary mixing chamber where more air is admitted and more complete oxidation occurs. As much as 300 percent excess air is supplied in order to promote oxidation of combustibles. Auxiliary burners are sometimes installed in the mixing chamber to increase the combustion temperature.(1)437-452

Multiple chamber units have capacities of 50 tons/day (45.4 MT/day) and are usually equipped with automatic charging mechanisms, temperature controls, and movable grate systems.(2)2.1-2

D. Emission Rates:

Operating conditions, refuse composition, and basic incinerator design have a pronounced effect on emissions. The method by which air is supplied to the combustion chamber has the greatest effect of all design parameters on the quantity of particulate emissions. As underfire air is increased, an increase in fly-ash emission occurs. Erratic refuse charging causes a disruption of the combustion bed and a subsequent release of large quantities of particulates. Uncombusted particulate matter and carbon monoxide are emitted for an extended period after charging of batch-fed units because of interruptions in the combustion process. In continuously-fed units, particulate emissions are dependent upon grate type. Use of rotary kiln and reciprocating grates causes higher particulate emissions than use of rocking or traveling grates. Particulate emissions from municipal incinerators are presented in Table II-7.(2)2.1-3 Pounds per hour emission rates are based on a burning rate of 2 tons/hour.

TABLE II-7

PARTICULATE EMISSIONS FROM MUNICIPAL INCINERATORS

Type of Operation & Control	% Control	Emissions		Emission Rate	
		lbs/ton	kg/M ton	lbs/hr	kg/hr
Multiple Chamber, Uncontrolled	0	30	15	60	27.2
Multiple Chamber, with Settling Chamber and Water Spray	0	14	7	28	12.7
Multiple Chamber, with Settling Chamber and Water Spray, Mechanical Collector	30-80	9.8-2.8	4.9-1.4	19.6-22.4	8.9-10.2
Multiple Chamber, with Settling Chamber and Water Spray, Scrubber	80-95	2.8- .7	1.4- .4	5.6- 1.4	2.5- .6
Multiple Chamber, with Settling Chamber and Water Spray, Electrostatic Precipitator	90-96	1.4- .6	.7- .3	2.8- 1.1	1.3- .5
Multiple Chamber, with Settling Chamber and Water Spray, Fabric Filter	97-99	.4- .14	.2- .07	.8- .3	.4- .14

*Emission rate based on 2 ton/hour burning rate

E. Control Equipment:

Potential control equipment for municipal incinerators vary from a simple settling chamber to a fabric filter. Seven potential control methods and their efficiencies are:[1]2.1-4

1.	Settling Chamber:	0-30%
2.	Settling Chamber:	30-60%
3.	Wetted Baffles:	60%
4.	Mechanical Collector:	30-80%
5.	Scrubber:	80-95%
6.	Electrostatic Precipitator:	90-96%
7.	Fabric Filter:	97-99%

A settling chamber is least expensive of the control systems used on incinerators. It consists of a large refractory-lined chamber where flue gases are slowed to permit gravity settling of coarse materials. These chambers are supplemented by sprays to wet the walls, and the bottoms are wet (quiescent ponds) or sluiced (for fly-ash removal) to minimize reentrainment of settled ash.

The cyclone spins the gases as they move down the length of the unit, reversing flow, and leaving through an axial exit pipe. Because of the spin, the larger particles in the gas stream seek the outside of the gas stream, where they fall along the wall to a collection hopper.

Electrostatic precipitators apply separating force to the dust particles by the interaction of electrical charges placed upon the surface of the dust particles by which the dust-laden gas passes. Upon entering an ion-filled space, the dust particles receive a negative electrical charge and are moved toward the positively charged collecting plates. At predetermined intervals, the collecting plates are mechanically rapped in order to dislodge the layer of collected dust. The dust is collected in hoppers located beneath the electrode section of the precipitator.

Fabric filters are designed with tubes of woven fabric (cotton, wool, nylon, etc.) hung in frames equipped with shaking or deflating mechanisms for dust dislodgment. The mechanics of collection on fabric filters are highly complicated and include impingement, diffusion, electrostatics, and direct sieving. In order to assure satisfactory performance and long bag life, flue gas temperatures are controlled in the range of 250°-550°F. The temperature range may be more narrow depending upon the fabric and the flue gas composition.

There are many types of scrubbing devices for contacting liquids with gas streams for the purpose of removing particulate matter and gaseous pollutants. The three most common are:

1. wetted surfaces, i.e., systems of wetted pipes, baffles, or walls located in the off-gas duct;
2. devices for contacting the gas with a liquid spray, either in a spray-filled chamber or in a Venturi;
3. devices for bubbling the gas through a quantity of liquid (by ducting it below a liquid surface or by blowing it through impingement trays or through a packed column).

All of these devices hymidify and cool the exhaust and produce a "steam" plume at the stack under some atmospheric conditions. Application of a higher pressure drop across a scrubber generally results in a higher degree of particulate removal. ([2])VII-17-VII-48

F. New Source Performance Standards and Regulation Limitations:

New Source Performance Standards (NSPS): On December 23, 1971, EPA promulgated "New Source Performance Standards" for incinerators of more than 10 tons/day charging rate. The limitation is 0.08 grains/standard cubic foot corrected to 12 percent CO_2, maximum two-hour average.

State Regulations for New and Existing Sources: Particulate emission regulations for varying charging rates are expressed differently from state to state. Regulations applicable to new and existing incinerators are listed according to the basis of the limitation. The limitations are based on concentration, control efficiency, gas volume and charging rate.

Concentration Basis: States having regulations for new and existing incinerators expressed on a concentration basis are listed in Table II-8.

TABLE II-8

STATES HAVING REGULATIONS FOR NEW AND EXISTING SOURCES ON A CONCENTRATION BASIS

State	Capacity & Age	Limitation
Alaska	≤ 200 lbs/hr	0.3 gr/scf
	200-1000 lbs/hr	0.2 gr/scf
	> 1000 lbs/hr	0.1 gr/scf
Arkansas	≥ 200 lbs/hr	0.2 gr/scf
	< 200 lbs/hr	0.3 gr/scf
California	all sizes typical of all countries	0.3 gr/scf
Colorado	new	0.1 gr/scf
	existing	0.15 gr/scf
Connecticut	new	0.08 gr/scf
Florida	≥ 50 tons/day (new)	0.08 gr/scf
	≥ 50 tons/day (existing)	0.1 gr/scf
Georgia	≥ 50 tons/day	0.08 gr/scf
	≤ 50 tons/day	0.1 gr/scf
	existing before 1/1/72	0.2 gr/scf
Illinois	> 2000 lbs/hr	0.08 gr/scf
	≤ 2000 lbs/hr	0.02 gr/scf
	> 60,000 lbs/hr	0.05 gr/scf
	≤ 2000 lbs/hr (new)	0.10 gr/scf
Iowa	≥ 1000 lbs/hr	0.20 gr/scf
	< 1000 lbs/hr	0.35 gr/scf
Kentucky	> 50 tons/day	0.08 gr/scf
	≤ 50 tons/day	0.2 gr/scf
Louisiana	all sizes	0.2 gr/scf
Maryland	all sizes	0.03 gr/scf
Massachusetts	all sizes	0.1 gr/scf
Minnesota	< 200 lbs/hr	0.3 gr/scf
	200-2000 lbs/hr	0.2 gr/scf
	> 2000 lbs/hr	0.1 gr/scf
Mississippi	all sizes	0.2 gr/scf
	all sizes (new)	0.1 gr/scf
Missouri	≥ 200 lbs/hr (new)	0.2 gr/scf
	all others	0.3 gr/scf
Montana	≤ 200 lbs/hr (new)	0.3 gr/scf
	> 200 lbs/hr	0.2 gr/scf
	new sources	0.1 gr/scf
Nebraska	< 2000 lbs/hr	0.2 gr/scf
	≥ 2000 lbs/hr	0.1 gr/scf
New Hampshire	≤ 200 lbs/hr	0.3 gr/scf
	> 200 lbs/hr (new)	0.2 gr/scf
	> 50 tons/day	0.08 gr/scf
New Jersey	all sizes	0.1 gr/scf
Oregon	≤ 200 lbs/hr	0.3 gr/scf
	> 200 lbs/hr	0.2 gr/scf
	> 200 lbs/hr (new)	0.1 gr/scf
Pennsylvania	all sizes	0.1 gr/scf
Rhode Island	< 2000 lbs/hr	0.16 gr/scf
	≥ 2000 lbs/hr	0.08 gr/scf
Utah	> 50 tons/day	0.08 gr/scf
Virginia	all sizes	0.14 gr/scf
Washington	all sizes	0.1 gr/scf
Washington, D.C.	all sizes	0.08 gr/scf

Control Efficiency Basis: Utah requires processes to maintain 85% control efficiency over uncontrolled emissions.

Gas Volume Basis: Texas expresses particulate emission limitations in pounds/hour for specific stack flow rates. The Texas limits are:

10^3 to 10^4 acfm - 7.11 lbs/hr
10^4 to 10^5 acfm - 38.00 lbs/hr
10^5 to 10^6 acfm - 158.00 lbs/hr

Process Weight Rate Basis: Hawaii, Wyoming, South Dakota, Vermont and Nevada express incinerator limitations in pounds of emission per pounds of refuse charged. These limitations are listed below:

State	Emission Rate	Basis
Hawaii	.2 lbs	per 100 lbs refuse
Wyoming	.2 lbs	per 100 lbs refuse
South Dakota	.2 lbs	per 100 lbs refuse
Vermont	.1 lbs	per 1,000 lbs dry refuse
Nevada	3.0 lbs	per ton refuse if ≤ 2,000 lbs/hr

Potential Source Compliance and Emission Limitation: New Source Performance Standards limit emissions on a concentration basis, so no direct comparison with emissions in Table II-7 are made.

The Environment Reporter was used to update the emission limitations.

G. References:

Literature used to develop the information on municipal incinerators is listed below:

1. Compilation of Air Pollutant Emission Factors (Second Edition), EPA, Publication No. AP-42, March 1975.

2. Danielson, J. A., Air Pollution Engineering Manual, Second Edition, AP-40, Research Triangle Park, North Carolina, EPA, May 1973.

3. Systems Study of Air Pollution from Municipal Incineration, Volume I, Arthur D. Little, Inc., Contract No. CPA-22-69-23, March 1970.

The following references were consulted but not used directly to develop the information on municipal incinerators:

4. Brinkerhoff, Ronald J., Inventory of Intermediate-Size Incinerators in the United States - 1972, Pollution Engineering, November 1973.

5. Air Pollution Aspects of Emission Sources: Municipal Incineration, Air Pollution Control Office, Publication AP-92, Research Triangle Park, North Carolina, EPA, May 1971.

A. Source Category: IV Evaporation Losses

B. Sub Category: Degreasing

C. Source Description:

Degreasing operations clean the surfaces of manufactured items so that surface coatings will adhere. These operations are also used as a final step in the manufacture of items that are not surface coated. During the fabrication of many metal products, surfaces are lubricated with oils, greases, or stearates to facilitate various drawing, forming and machining operations. Lubricants with dust particles and dirt, must be removed from the metal surface prior to coating or shipping.(4)20

Solvent degreasers vary in size from simple unheated wash basins to large heated conveyorized units in which articles are washed in hot solvent vapors. Figure IV-49(6)871 presents a typical vapor-spray degreaser. Solvent is vaporized in the left portion of the tank either by electric, steam, or gas heat. The vapors diffuse and fill that portion of the tank below the water-cooled condenser. At the condenser level, a definite interface between the vapor and air can be observed from the top of the tank. Solvent condensed at this level runs into the collection trough and from there to the clean-solvent receptacle at the right of the tank. Articles to be degreased are lowered in baskets into the vapor space of the tank. Solvent vapors condense on the cooler metal parts, and the hot condensate washes oil and grease from the parts. The contaminated condensate drains back into the heated tank from which it can be revaporized. When necessary, dirty parts are hand sprayed with hot solvent by means of a flexible hose and spray pump to aid in cleaning.

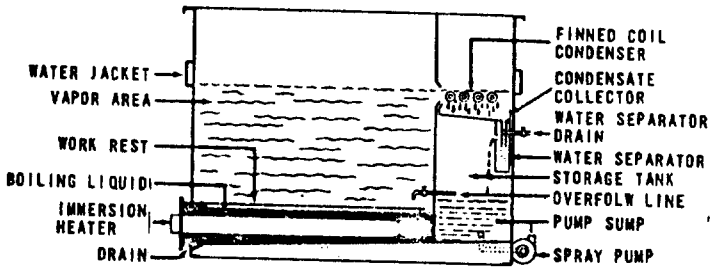

Figure IV-49: Vapor-Spray Degreaser

In a continuous vapor-spray degreaser, metal parts are suspended in baskets from hooks which move through the unit on a monorail. Figure IV-50(4)23 presents a diagram of a continuous vapor-spray degreaser. The parts pass through a vapor zone, followed by a liquid immersion section and then another vapor zone.

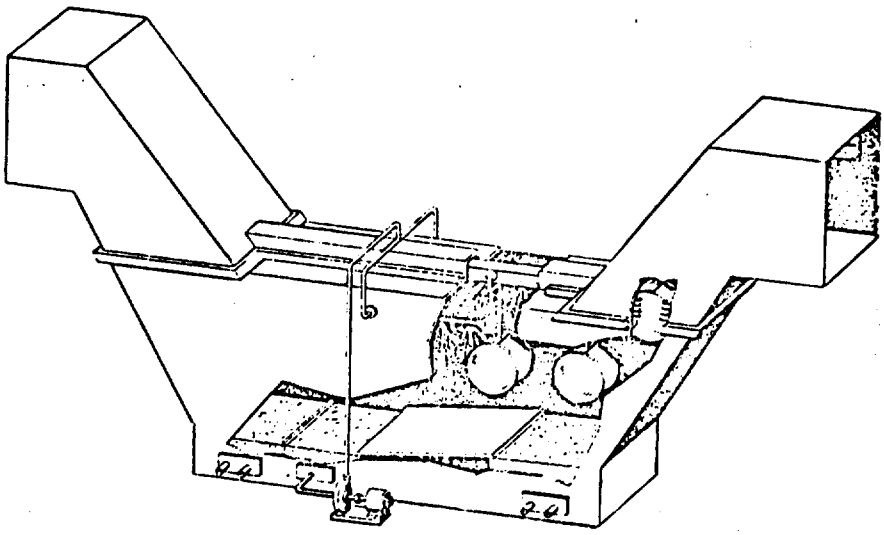

Figure IV-50: Continuous Vapor-Spray Degreaser

D. Emission Rates:

Degreasing operations use halogenated hydrocarbons. The most common hydrocarbons used are the following:(4)21

Solvent	Formula	Boiling Point	Boiling Point
Trichloroethylene	$ClHC = CCl_2$	87°C	189°F
1, 1, 1 - Trichloroethane	CH_3CCl_3	74°C	165°F
Perchloroethylene	$Cl_2C = CCl_2$	120°C	248°F
Methylene Chloride	CH_2Cl_2	40°C	104°F
Trichlorotrifluoroethane	$Cl_2C - CF_3$	45.8°C	114°F
	$Cl_2FC - CF_2Cl$	47.7°C	118°F

Because of Los Angeles Rule 66, an estimated 90% of the solvent used in Los Angeles County is divided equally between perchloroethylene ($Cl_2C=CCl_2$) and 1, 1, 1 trichloroethane (CH_3CCl_3); the remaining 10% is trichloroethylene ($ClHC=CCl_2$). In localities that do not have air pollution control laws restricting organic solvent emissions, an estimated 90% of the solvent used for degreasing is trichloroethylene. Most of the remaining 10% of the solvent is the higher boiling perchloroethylene. Selection of solvent is dictated by the operation's temperature requirements. Most greases and tars dissolve readily at the 189° boiling point of trichloroethylene. Perchloroethylene boils at 249°F and is used when higher temperatures are required or when compliance with air pollution control legislation is required.(6)872

Solvent emissions from vapor degreasing occur primarily during loading and unloading of the degreaser. Solvent escapes from the vapor zone and, to a lesser extent, during idling conditions. Daily emissions of a single spray degreasing booth may vary from a few pounds to 1300 pounds per day. A typical metal cleaning operation using a vapor degreaser can clean 200,000 lbs of metal in one day.(3)8 Table IV-1 presents controlled and uncontrolled hydrocarbon emissions from degreasing operations.

TABLE IV-1

HYDROCARBON EMISSIONS FROM DEGREASING OPERATIONS

Type of Operation & Control	% Control	Metal Cleaned		Based on 200,000 lbs of Metal Cleaned/day[3][8]	
		lbs/ton	kg/m ton	lbs/hr	kg/hr
Degreasing, Uncontrolled	0	1.5	.75	6.3	2.8
Degreasing, Refrigerated Cooling Coils	30-60	1.0-0.6	0.5-0.3	4.2-2.5	1.9-1.1
Degreasing, Use of Covers	25-40	1.1-0.9	0.5-0.05	4.6-3.8	2.1-1.7
Degreasing, Carbon Adsorption	40-70	0.9-0.5	0.5-0.3	3.8-2.1	1.7-1.0

E. Control Equipment:

Three methods of control are used to reduce emissions from degreasing operations in addition to use of nonreactive solvents. These methods include:

1. refrigerated cooling coils,
2. covers, and
3. carbon adsorption.

Cooling coils condense solvent vapors before they escape from the top of the tank. They achieve 30%-40% control. Guillotine-type covers are closed when the tank is not in use, achieving 25%-40% control. Carbon adsorption systems are an effective means of control of hydrocarbon emissions from degreasing. A typical carbon adsorption system consists of two vessels filled with activated carbon, a solvent-laden air inlet, an outlet, a blower, filter, steam inlet and outlet, a condenser, and a decanter. Bed efficiencies properly maintained carbon adsorption systems average about 95%. However the intake efficiency can be much lower, thus bringing total control efficiency to a range of 40 to 70%.

F. New Source Performance Standards (NSPS): No New Source Performance Standards have been promulgated for degreasing operations.

State Regulations for New and Existing Sources: Currently, hydrocarbon emission regulations are patterned after Los Angeles Rule 66 and Appendix B type legislation. Organic solvent useage is categorized by three basic process types. These are, (1) heating of articles by direct flame or baking with any organic solvent, (2) discharge into the atmosphere of photochemically reactive solvents by devices that employ or apply the solvent, (also includes air or heated drying of articles for the first twelve hours after removal from #1 type device) and (3) discharge into the atmosphere of non-photochemically reactive solvents. For the purposes of Rule 66, reactive solvents are defined as solvents of more than 20% by volume of the following:

1. A combination of hydrocarbons, alcohols, aldehydes, esters, ethers or ketones having an olefinic or cyclo-olefinic type of unsaturation: 5 per cent
2. A combination of aromatic compounds with eight or more carbon atoms to the molecule except ethylbenzene: 8 per cent
3. A combination of ethylbenzene, ketones having branched hydrocarbon structures, trichloroethylene or toluene: 20 per cent

Rule 66 limits emissions of hydrocarbons according to the three process types. These limitations are as follows:

Process	lbs/day	& lbs/hour
1. heated process	15	3
2. unheated photochemically reactive	40	8
3. non-photochemically reactive	3000	450

Appendix B (Federal Register,Vol. 36, No. 158 - Saturday August 14, 1971) limits the emission of photochemically reactive hydrocarbons to 15 lbs/day and 3 lbs/hr. Reactive solvents can be exempted from the regulation if the solvent is less than 20% of the total volume of a water based solvent. Solvents which have shown to be virtually unreactive are, saturated halogenated hydrocarbons, perchloroethylene, benzene, acetone and c_1-c_5n-paraffins.

For both Appendix B and Rule 66 type legislation if 85% control has been demonstrated the regulation has been met by the source even if the lbs/day and lbs/hr values have been exceeded. Most states have regulations that limit the emissions from handling and use of organic solvents. Alabama, Connecticut and Ohio have regulations patterned after Los Angeles Rule 66. Indiana and Louisiana have regulations patterned after Appendix B. Some states such as North Carolina have an organic solvent regulation which is patterned after both types of regulations.

Colorado specifically limits hydrocarbon emissions from degreasing operations to 40 lbs/day and 8 lbs/hr.

Table IV-2 presents uncontrolled and controlled emissions and limitations from degreasing operations.

TABLE IV-2

HYDROCARBON EMISSIONS AND LIMITATIONS FROM DEGREASING

Type of Operation & Control	% Control	Emissions Based on 200,000 lb Metal Cleaned/day lb/hr	kg/hr	Colorado lb/hr	kg/hr	Limitations[5] lb/hr	kg/hr
Degreasing, Uncontrolled	0	6.3	2.8	8	3.6	3	1.4
Degreasing, Refrigerated Cooling Coils	30-60	4.2-2.5	1.9-1.1	8	3.6	3	1.4
Degreasing, Use of Covers	25-40	4.6-3.8	2.1-1.7	8	3.6	3	1.4
Degreasing, Carbon Adsorption	40-70	3.8-2.1	1.7-1.0	8	3.6	3	1.4

Potential Source Compliance and Emission Limitations: Hydrocarbon emission limitations are not based on process weight. Degreasing operations can use either complying solvents or covers or carbon adsorption to meet the 3 lbs/hour limitation.

The Environment Reporter was used to update the emission limitations.

G. References:

Literature used to develop the information in this section on degreasing is listed below:

(1) Control Techniques for Hydrocarbon and Organic Solvent Emissions from Stationary Sources, U.S. Department of Health, Education, and Welfare, National Air Pollution Control Administration Publication No. AP-68, March 1970.

(2) Larson, Dennis M., Activated Carbon Adsorption for Solvent Recovery in Vapor Degreasing, Metal Finishing, Volume 72, No. 10, October 1974.

(3) Organic Compound Emission Sources, Emission Control Techniques, and Emission Limitation Guidelines (Draft), EPA, Emission Standards and Engineering Division, June 1974.

(4) Hughes, T. W., Source Assessment: Prioritization of Air Pollution from Industrial Surface Coating Operations, Monsanto Research Corporation, Contract No. 68-02-1320, (Task 14), February 1975.

(5) Analysis of Final State Implementation Plans - Rules and Regulations, EPA, Contract 68-02-0248, July 1972, Mitre Corporation.

(6) Air Pollution Engineering Manual, Second Edition, Compiled and Edited by John A. Danielson, May 1973.

A. Source Category: IV Evaporation Losses

B. Sub Category: Dry Cleaning

C. Source Description:

Dry cleaning is the process of washing fabrics in a nonaqueous solvent. Two classes of organic solvents are used most frequently by the dry cleaning industry. These are:

1. petroleum solvents, and
2. chlorinated hydrocarbon solvents (synthetic solvents).

The process of dry cleaning is performed in three steps. These include:

1. "Washing," fabric is agitated in a solvent bath and rinsed with clean solvent;
2. "Extraction," excess solvent is removed by centrifugal force; and
3. "Drying" or "Reclaiming," fabric is tumble dried with warm air.

Older petroleum solvent equipment employs separate machines for each step, and synthetic solvent and newer petroleum solvent equipment combine the washing and extraction in one machine, and drying in a separate unit. Newer equipment, including coin-operated machines, combine all three steps in one machine.

Combination washing and extracting machines contain a perforated horizontal rotating drum enclosed in a vapor-tight housing. The machine has one door and is mounted on a flat base solvent tank. These machines slowly agitate the clothes during the wash cycle, and after the solution is drained, the drum rotates at high speed to wring solvent from the fabrics.

Machines that perform all three dry cleaning steps have a horizontal rotating drum which is mounted with one door in a vapor-tight housing. The drum rotates slowly during the wash cycle. After washing is completed, the solvent returns to the tank, and the drum rotates at high speed to extract more solvent, which is also returned to the tank. The drum again rotates slowly while heated air is blown through the fabrics. The air is recycled to the tumbler through a condenser to recover the evaporated solvent. The three-step machine is used only with synthetic solvents.

In installations where one machine does not perform all three steps, a separate tumbler is used to dry the fabrics after the extractor. The tumbler is a revolving perforated cylinder through which air is passed after the air has been heated by passage through steam heated coils. A few synthetic solvent tumblers use electrical resistance heating coils instead of steam.

In drying tumblers that utilize petroleum solvent, the heated air makes a single pass through the fabric. Drying tumblers designed for synthetic solvent are called "reclaimers" or "reclaiming tumblers," and the drying air is recirculated in a closed system.

Heated air vaporizes the solvent, and this vapor-laden mixture is carried through refrigerated coils. Solvent vapor is condensed and decanted from the water and is returned to the wash machine tank. The air is then recirculated through the heater to the tumbling fabric. When the concentration of solvent vapor from the drum drops below its dew point, the air is exhausted to the atmosphere. This phase of the drying cools the fabric and deodorizes it by evaporating the final traces of solvent.

D. Emission Rates:

The major source of hydrocarbon emissions from dry cleaning is the tumble dryer. The amount of solvent vapors emitted to the atmosphere from any one dry cleaning plant is dependent upon:

1. the amount of cleaning performed,
2. the type of equipment used, and
3. the precautions practiced by the operating personnel.

The petroleum solvents used in Los Angeles prior to enactment of Rule 66 contained 11 to 13 percent by volume of highly reactive components. The Stoddard solvent and the 140-F solvent used in Los Angeles County are reformulated to contain no more than 7.5% by volume of reactive components. Table IV-3 lists the physical properties of commonly used dry cleaning solvents.

TABLE IV-3

PROPERTIES OF DRY CLEANING SOLVENTS

Property	140-F	Typical 140-F, R 66	Stoddard	Typical Stoddard, R 66	Perchloro-ethylene	Trichloro-trifluoro-ethane
Flash point (TCC), °F	138.2	143	100	108	Extinguishes fire	Non-Flammable
Initial boiling point, °F	357.8	366	305	316	250	117.6
Dry end point, °F	396	400	350	356	254	unknown
API gravity	47.9	44.0	50.1	48.1		
Specific gravity at 60 °F	0.789	0.8063	0.779	0.788	1.623	1.574
Weight, lb/gal	6.57	6.604	6.49	6.56	13.55	13.16
Paraffins, volume %	45.7	82.5	46.5	88.3		
Aromatics, volume %	12.1	7.0	11.6	5.9		0
Naphthenes, volume %	42.2		41.9			
Olefins, volume %		0.5		0.8		
Toluene/ethylbenzene, volume %				5.0		
Corrosiveness	None	None	None	None	Slight on metal	none
Caution	Flammable	Flammable	Flammable	Flammable	Toxic	
Odor	Mild	Mild	Sweet	Sweet	Ether like	Like CCl_4
Color	Water white	Water white	Water white	Water white	Colorless	Water White
Cost (average size plant), $/gal	0.29	0.30	0.28	0.29	2.05	8-10

Synthetic solvents for dry cleaning are classed as nonreactive. Perchloroethylene is used in almost all synthetic plants. Trichloroethylene, a reactive solvent, was a major synthetic dry cleaning solvent a few years ago but is no longer used since perchloroethylene or trichlorotrifluoroethane is preferred.

The average daily emissions to the atmosphere from synthetic dry cleaning and petroleum dry cleaning plants is as follows:(1)879

Synthetic Solvent Dry Cleaning: 38 lbs/day, 13.6 kg/day
Petroleum Solvent Dry Cleaning: 875 lbs/day, 79.4 kg/day

The operators of plants using synthetic solvents conserve the solvent because of the high cost. A typical small neighborhood synthetic solvent plant processing 1,500 pounds of textiles in a 5-day week have the following potential emission rates as outlined in Table IV-3A.

TABLE IV-3A
HYDROCARBON EMISSIONS FROM DRY CLEANING USING SYNTHETIC SOLVENTS

Type of Operation	Emissions				
	gal/ 1,000 lbs Fabric	lbs/ 1,000 lbs Fabric	kg/ 1,000 lbs Fabric	lbs/day	kg/day
Dry cleaning, using separate combination washer-extractor and separate tumbler reclaimer, including reuse of solvent recovered from filter sludge	7.3-11	99.3-150	45 - 68	29.8- 45.0	13.5-20.4
Dry cleaning, using "hot" type unit where all three functions are performed in same machine	3.6- 5.5	30 - 74.8	22.2- 33.9	14.7- 22.4	6.7-10.2
Dry cleaning, using coin-operated units averaging less than 8 lbs/load, performing all three functions in one unit	11 -36	150 -490	68 -222	45.0-147	20.4-66.7

The low cost of petroleum solvents provides little economic incentive to conserve solvent. The solvent is driven off during the drying of the fabric in the tumbler. Solvent is also emitted during transfer of wet fabrics from the washer to the extractor. Normally, fabrics are placed on a drain board in the washing machine for 3 to 5 minutes before being transferred. Use of petroleum solvents in similar plants results in emissions of 4 to 7 times more solvent (by volume) than emissions from synthetic solvent plants.

E. Control Equipment:

Adsorption and condensation systems control synthetic solvent emissions from modern dry cleaning plants. A water-cooled condenser normally is an integral part of the closed cycle in the reclaimer tumbler. Up to 95% of the solvent is recovered from the clothing in the tumbler. Activated carbon adsorption is used where 97%-98% control efficiencies are desired.

There are no commercially available control units for solvent recovery for petroleum-based plants. Two types of petroleum solvents are used that are formulated so they are non-reactive under Los Angeles County's Rule 66.[1]882

F. New Source Performance Standards and Regulation Limitations:

New Source Performance Standards (NSPS): No New Source Performance Standards have been promulgated for the dry cleaning industry.

State Regulations for New and Existing Sources: Currently, hydrocarbon emission regulations are patterned after Los Angeles Rule 66 and Appendix B type legislation. Organic solvent useage is categorized by three basic process types. These are, (1) heating of articles by direct flame or baking with any organic solvent, (2) discharge into the atmosphere of photochemically reactive solvents by devices that employ or apply the solvent, (also includes air or heated drying of articles for the first twelve hours after removal from #1 type device) and (3) discharge into the atmosphere of non-photochemically reactive solvents. For the purposes of Rule 66, reactive solvents are defined as solvents of more than 20% by volume of the following:

1. A combination of hydrocarbons, alcohols, aldehydes, esters, ethers or ketones having an olefinic or cyclo-olefinic type of unsaturation: 5 per cent
2. A combination of aromatic compounds with eight or more carbon atoms to the molecule except ethylbenzene: 8 per cent
3. A combination of ethylbenzene, ketones having branched hydrocarbon structures, trichloroethylene or toluene: 20 per cent

Rule 66 limits emissions of hydrocarbons according to the three process types. These limitations are as follows:

Process	lbs/day	& lbs/hour
1. heated process	15	3
2. unheated photochemically reactive	40	8
3. non-photochemically reactive	3000	450

Appendix B (Federal Register,Vol. 36, No. 158 - Saturday, August 14, 1971) limits the emission of photchemically reactive hydrocarbons to 15 lbs/day and 3 lbs/hr. Reactive solvents can be exempted from the regulation if the solvent is less than 20% of the total volume of a water based solvent. Solvents which have shown to be virtually unreactive are, saturated halogenated hydrocarbons, perchloroethylene, benzene, acetone and c_1-c_5n-paraffins.

For both Appendix B and Rule 66 type legislation if 85% control has been demonstrated the regulation has been met by the source even if the lbs/day and lbs/hr values have been exceeded. Most states have regulations that limit the emissions from handling and use of organic solvents. Alabama, Connecticut and Ohio have regulations patterned after Los Angeles Rule 66. Indiana and Louisiana have regulations patterned after Appendix B. Some states such as North Carolina have an organic solvent regulation which is patterned after both types of regulations.

Colorado specifically limits hydrocarbon emissions from dry cleaning operations by requiring at least 85% control. Operations that emit less than 3 lbs/hr and 15 lbs/day uncontrolled are exempt from the Section J regulation. Also dry cleaning operations can become exempt from Section J by switching to a non-photochemically reactive solvent.

Potential Source Compliance and Emission Limitations: Hydrocarbon emission limitations are not based on process weight. Typical dry cleaning operations as described in Section D, by virtue of using conforming synthetic solvents and equipment that recycles the solvent, will be in compliance with hydrocarbon regulations.

The Environment Reporter was used to update the emission limitations.

G. References:

Literature used to develop the information on dry cleaning is listed below:

1. Danielson, J. A., Air Pollutional Engineering Manual, Second Edition, AP-40, Research Triangle Park, North Carolina, EPA, May 1973.

2. Compilation of Air Pollutant Emission Factors, Second Edition, EPA, Publication No. AP-42, April 1973.

3. Priorization of Air Pollution From Industrial Surface Coating Operations, Monsanto Research Corporation, Contract No. 68-02-0320, February 1975.

4. Control Techniques for Hydrocarbon and Organic Solvent Emissions from Stationary Sources, U. S. Department of Health, Education, and Welfare, National Air Pollution Control Administration Publication No. AP-68, March 1970.

5. Analysis of Final State Implementation Plans - Rules and Regulations, EPA, Contract 68-02-0248, July 1972, Mitre Corporation.

A. Source Category: IV Evaporation Losses

B. Sub Category: Petroleum Refueling of Motor Vehicles

C. Source Description:

Refueling of vehicle tanks causes a displacement of hydrocarbon vapor laden air from vehicle tanks to the atmosphere. The amount of vapor displaced is proportional to the volume of gasoline delivered to the tank. The emissions consist of the more volatile components of gasoline including butanes and pentanes.[1]2 A recent study for the Department of Commerce by the Panel on Automotive Fuels and Air Pollution (March 1971) showed that the contribution of unburned hydrocarbons to the atmosphere during refueling operations compared with 1975 exhaust HC standards of .41 g/mile, is becoming a significant portion of the total. The HC vapor emissions during vehicle refueling are estimated at .32 g/mile.[2]93

D. Emission Rates:

Hydrocarbon emissions from refueling vehicle tanks are dependent upon:

1. the volume of fuel delivered,
2. ambient temperature, and
3. vapor pressure of gasoline.

Table IV-5 presents controlled and uncontrolled hydrocarbon emissions from refueling for typical service station sizes and classifications. The uncontrolled emissions from refueling vehicle tanks is 11 lbs/1,000 gallons (1.3 kg/10^3 liters) of gasoline delivered.[2]3 A vapor balance system reduces emissions 70%-90% to 1.1-3.3 lbs/1,000 gallons pumped. Secondary processing systems reduce emissions 90% to 1.1 lbs/1,000 gal (.13 kg/10^3 liters).[3]4

TABLE IV-5

HYDROCARBON EMISSIONS FROM REFUELING VEHICLE TANKS

Type of Operation & Control	% Control	Emissions lbs/day	Emissions kg/day
Major Service Stations, Uncontrolled	0	5.9	2.65
Major Service Stations, Vapor Balance	70-90(5)4	.6-1.8	.27-.81
Major Service Stations, Secondary Processing	90(6)7	.6	.27
Independents, Uncontrolled	0	2.6	1.17
Independents, Vapor Balance	70-90(5)4	.3-.8	.14-.36
Independents, Secondary Processing	90(6)7	.3	.14
Rural Stations >2000 gal < 6000 gal/mn, Uncontrolled	0	.18	.08
Rural Stations >2000 gal < 6000 gal/mn, Vapor Balance	70-90(5)4	.02-.05	.009-.02
Rural Stations >2000 gal < 6000 gal/mn, Secondary Processing	90(6)7	.02	.009
Terminals >25,000 gal/day, Uncontrolled	0	.98	.44
Terminals >25,000 gal/day, Vapor Balance	70-90(5)4	.1-.3	.05-.14
Terminals >25,000 gal/day, Secondary Processing	90(6)7	.1	.05

E. Control Equipment:

Various concepts are possible to appreciably reduce vapor losses during present refueling of vehicle tanks.(2) 91 The two basic concepts for minimizing refueling losses differ primarily where the displaced vapor is collected. The two basic approaches are:

1. containment of refueling vapors within vehicle,
2. containment of refueling vapors within station.

Figure IV-8 presents a diagram of the concept for collection, containment, and ultimate disposal of vehicle refueling losses. This concept has several advantages and disadvantages. These are listed as follows:

Containment of Refueling Vapors Within Vehicle

Advantages	Disadvantages
Requires little modification of filling station.	Imposes major task for control of exhaust emissions.
	Cost and complexity rule out retrofit.
	Does not control station refueling losses.

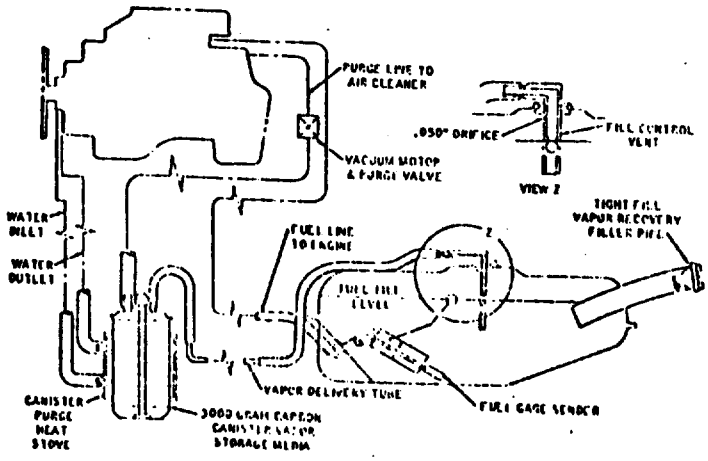

Figure IV-8: Schematic of Vehicle Vapor Containment

Figure IV-9 presents a diagram of a vapor control nozzle that would return displaced vapors from vehicle fuel tank to underground storage tank. Figure IV-10 presents a diagram of the vapor return and fuel lines that would be necessary to accomodate the vapor control nozzle. The nozzle presented in

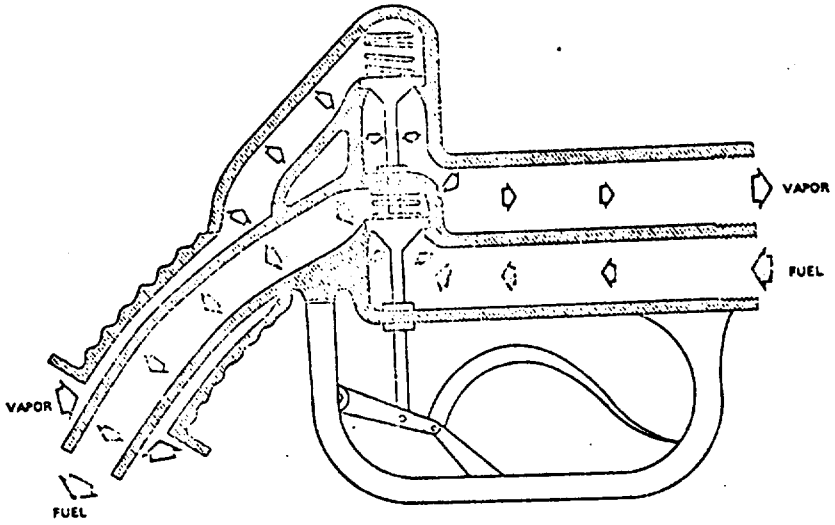

Figure IV-9: Vapor Control Nozzle

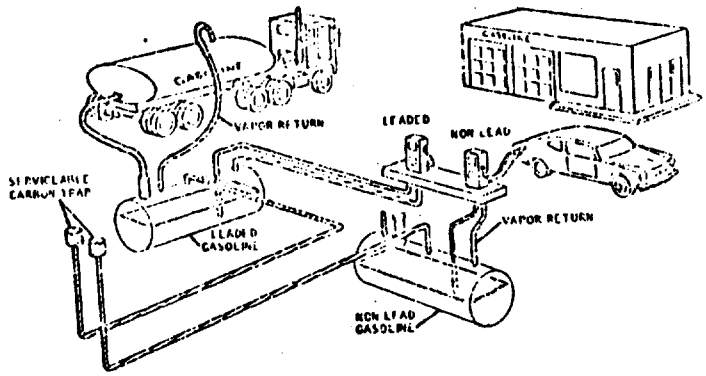

Figure IV-10: Station Modification for Tight Fill Nozzle

Figure IV-9 would have to be mated to a newly designed filler neck on vehicle tanks. Figure IV-11 presents the adapter arrangement that would be necessary to utilize this "equal-volume exchange concept" on older vehicles.

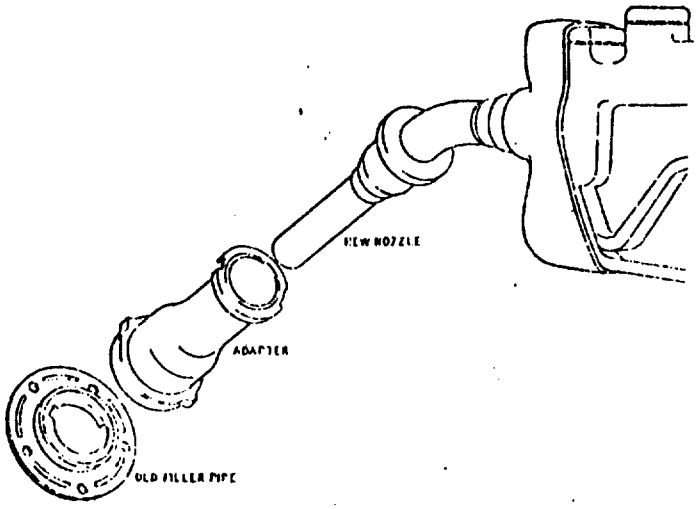

Figure IV-11: Retrofit Adapter for Past Models

The "equal-volume exchange concept" as outlined in the above figures also has its own unique advantages and disadvantages. They are as follows:

Containment of Refueling Vapors Within Station

Advantages	Disadvantages
Maintenance of system would be more effective than maintenance of systems on millions of vehicles.	Use of adapters would be difficult to police, and it would complicate attendant's task.
Control of underground tank breathing and refueling vapors should be easily attainable.	

F. New Source Performance Standards and Regulation Limitations:

New Source Performance Standards (NSPS): No "New Source Performance Standards" have been promulgated for petroleum refueling of motor vehicles.

State Regulations for New and Existing Sources; Several states specifically regulate hydrocarbon emissions arising from refueling vehicle tanks. California Bay area is representative of a regulation that requires 90% control of refueling emissions. Colorado limits the emissions from refueling to 1.10 lbs/10^3 gallons of fuel delivered. Recently, EPA Region I has promulgated a transportation control plan for the Boston Air Quality Control Region (Federal Register, June 12, 1975). Part of the plan included vapor return lines to be installed on gasoline stations to limit refueling vehicle emissions and station tank refueling emissions.

Potential Source Compliance and Emission Limitation: Existing technology is adequate to meet the 1.10 lbs/1000 gallon imposed by Colorado. A vapor balance or a secondary processing system operating at 90% control efficiency is required and has been accomplished on existing sources.

The Environment Reporter was used to update the emission limitations.

G. References:

Literature used to develop the information in this section, "Petroleum Refueling of Motor Vehicles," is listed below:

1. Vehicle Refueling Emission Seminar, API Publication 4222, December 4-5, 1973.

2. Hydrocarbon Vapor Control at Gasoline Service Stations, Barnard R. McEntire and Ray Skoff, APTIC #62202, Presented 66 APCA, Chicago, Illinois, June 24-28, 1973.

3. Organic Compound Emission Sources Control Techniques and Emission Limitation Guidelines (Draft), EPA, Emission Standards and Engineering Division, June 1974.

4. Batchelder, A. H., Kline, D.I., Vapor Recovery at Service Stations, State of California Air Resources Board, April 17, 1974.

5. Callaghan, D. J., Feldstein M., The Control of Gasoline Vapor Emissions at Service Stations, Bay Area Air Pollution Control District, San Francisco, California, for Presentation at the 68th Annual Meeting of the Air Pollution Control Association, Boston, Massachusetts, June 15-20, 1975.

6. Schneider, Alan M., Cost Effectiveness of Gasoline Vapor Recovery Systems, University of California at San Diego, for Presentation at the 68th Annual Meeting of the Air Pollution Control Association, Boston, Massachusetts, June 15-20, 1975.

7. Analysis of Final State Implementation Plans - Rules and Regulations, EPA, Contract 68-02-0248, July 1972, Mitre Corporation.

A. Source Category: IV Evaporation Losses

B. Sub Category: Graphic Arts (Gravure)

C. Source Description:

Gravure printing is a type of printing where the image area is recessed relative to the surface of the image carrier. Ink is picked up in the engraved area, and excess ink is scraped off the nonimage area with a "doctor blade." Ink is transferred directly from the image carrier to the paper or film. Gravure may be sheet fed or roll fed. Sheet-fed gravure uses either a flat plate for an image carrier, or a curved plate which is attached to a cylinder. In roll-fed gravure, or rotogravure, the image is engraved in the cylinder itself. Rotogravure may be used for coated or uncoated paper, film, foil, and many combinations thereof.(1)2

The ink used in high speed gravure printing contains a relatively large amount of low-boiling solvent and has a low viscosity. The rotogravure inks contain approximately 65% highly volatile, aromatic solvent which is not subject to decomposition in the drying process. Control of solvent vapors around the ink fountain is desirable to avoid the danger of explosion. For most commercial operations, the solvent concentration in the exhaust gases ranges between 25% and 40% of the lower explosive limit.(2)347

Figure IV-17(1)349 presents a schematic of a rotogravure printing operation.(2)349 Rotogravure printing is similar to web-letterpress because the web is printed on one side at a time and must be dried after each color is printed. In publication printing, the web is usually passed through four presses where four colors are applied to one side of the web. The web is turned over and passed through four additional presses for the reverse side printing. For four-color, two-sided printing, eight presses are employed, and each press will include a pass over or through a steam drum or hot air dryer where nearly all of the initial solvent is removed.

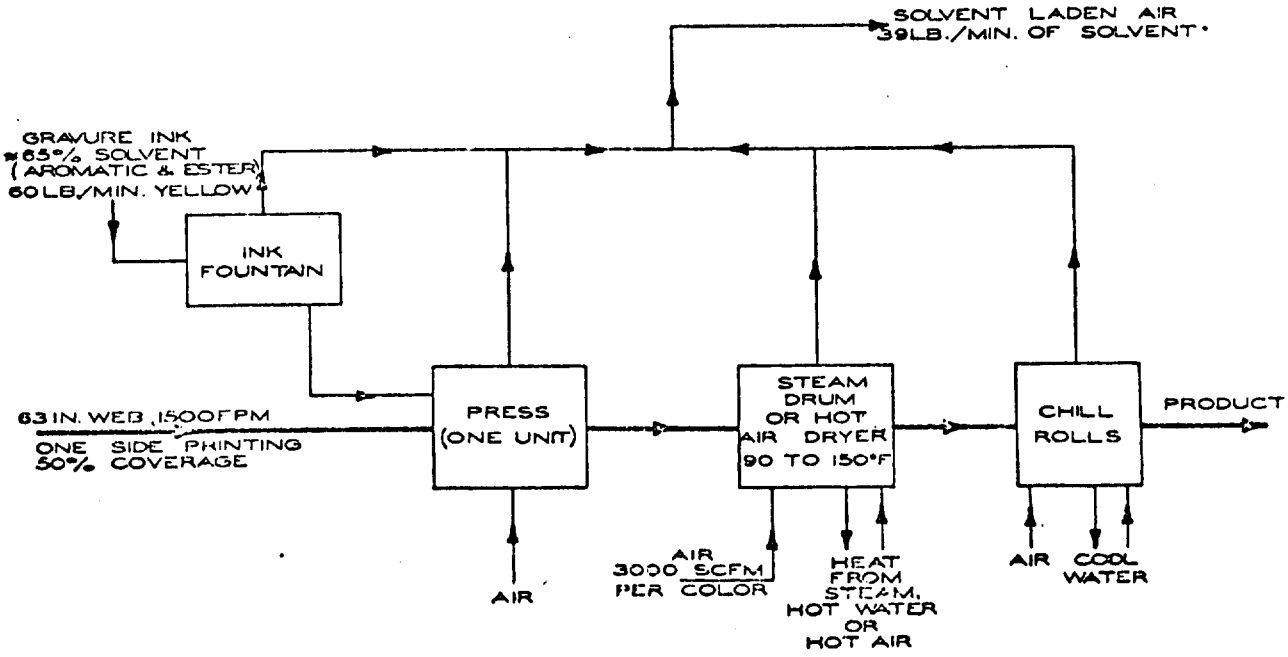

Figure IV-17: Rotogravure Printing Operation

A typical rotogravure printing operation as depicted in Figure IV-17 operating under the conditions listed would have hydrocarbon emissions according to press speed as presented in Figure IV-18.(1)351

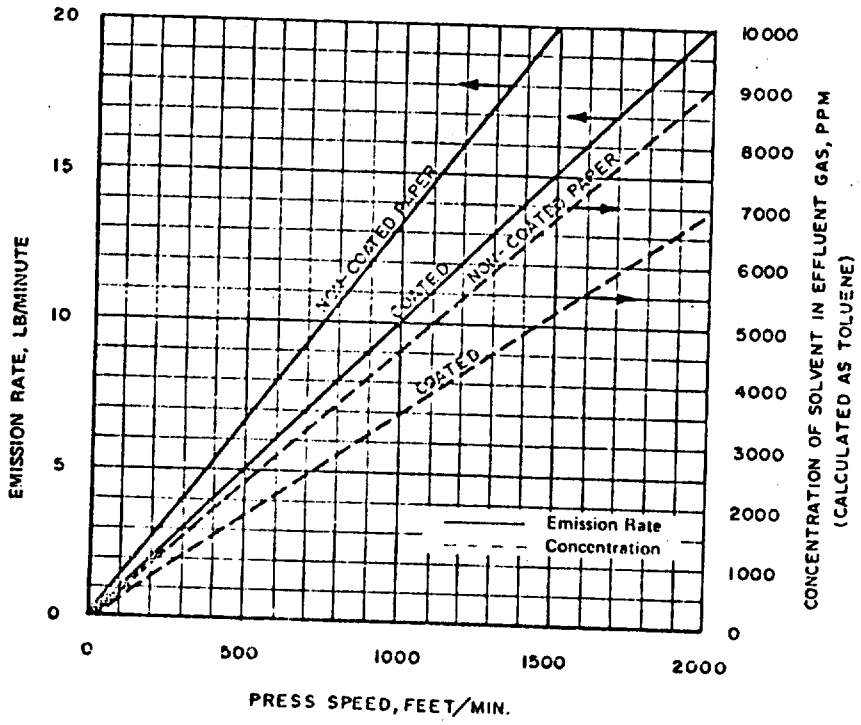

Figure IV-18: Emission Rates from a Typical Rotogravure Printing Operation

D. Emission Rates:

The major points of hydrocarbon emissions from rotogravure printing are:

1. hot air dryer,
2. press unit,
3. chill rolls, and
4. ink fountain.

In gravure and printing operations in general the ink is the major source of hydrocarbons. Printing inks consist of three major components:

1. Pigments, which produce the desired colors, are composed of finely divided organic and inorganic materials.
2. Resins, which bind the pigments to the substrate, are composed of organic resins and polymers.
3. Solvents, which dissolve or disperse the resins and pigments, are usually composed of organic compounds. The solvent is removed from the ink and emitted to the atmosphere during the drying process.

The solvents used in ink dilution are classified into five general categories according to the chemical composition.(2)335

A. Benzene, toluene, xylene, ethylbenzene, unsaturates and mixtures with aromatic content greater than 25% by volume.
B. Normal and isoparaffins, cycloparaffins, mineral spirits containing less than 15% aromatics.
C. Methanol, ethanol, propanol, isopropanol, butanol, isobutanol, glycols, esters, ketones.
D. Trichloroethylene, trichloroethane, methylene chloride.
E. Nitroparaffins and dimethyl formamide.
F. Miscellaneous

Table IV-7 presents the volume breakdown in hundreds of gallons of solvent consumed for ink dilution by process and solvent type.(2)338

TABLE IV-7

VOLUME BREAKDOWN OF SOLVENT CONSUMED FOR INK DILUTION BY PRINTING PROCESS AND SOLVENT TYPE (1968)

PRINTING PROCESS	SOLVENT TYPE (HUNDRED GALLONS)						
	A	B	C	D	E	F	TOTAL
Lithography	14,972	23,941	16,691	38	723	408	56,773
Letterpress	98	444	399	52	–	1	994
Flexography	58	606	10,180	–	1	170	11,015
Gravure	10,089	24,637	12,868	–	12	–	47,606
Screen Printing	34	173	85	–	–	145	437
Total	25,251	49,801	40,223	90	736	724	116,825

Table IV-7A presents the uncontrolled and controlled emissions in pounds/hour and kilograms/hour for the typical rotogravure printing operations as depicted in Figure IV-17. The emissions listed are for a typical operation. These could vary even with the same equipment. The exact solvent structure of the ink, the percentage of the web that is covered with ink, the number of colors applied and dryers used, and press speed affect the emissions.

TABLE IV-7A

HYDROCARBON EMISSIONS FROM GRAVURE PRINTING

Type of Operation & Control	% Control	Press Speed feet/min	Emissions	
			lbs/hr	kg/hr
Rotogravure Printing, Coated Paper Uncontrolled	0	1500	15	6.8
Rotogravure Printing, Non-Coated Paper, Uncontrolled	0	1500	20	9.1
Rotogravure Printing, Coated Paper, with Thermal Combustion	90-99	1500	1.5-.15	.7-.07
Rotogravure Printing, Non-Coated Paper, with Thermal Combustion	90-99	1500	2 -.2	.9-.1
Rotogravure Printing, Coated Paper, with Catalytic Combustion	85-95	1500	2.3-.75	1.0-.3
Rotogravure Printing, Non-Coated Paper, with Catalytic Combustion	85-95	1500	3-1	1.4-.5
Rotogravure Printing, Coated Paper, with Adsorption	99	1500	.15	.07
Rotogravure Printing, Non-Coated Paper, with Adsorption	99	1500	.2	.1

E. Control Equipment:

Control of hydrocarbon emissions from rotogravure, and printing operations in general, are categorized according to the following:(2)354

1. process modification,
2. ink modification, and
3. conventional air pollution control equipment.

1. Process Modification:

Modification of the drying process would decrease hydrocarbon emissions. Several methods of drying are being developed which could greatly reduce hydrocarbon emissions:

Microwave drying increases the temperature of the ink by application of electromagnetic energy. Since fuel is not directly consumed, the oven exhaust will not contain combustion products. However, solvent vapors will be emitted if conventional inks are used.

Infrared drying causes a free radical polymerization mechanism to occur which utilizes a nonvolatile monomer-based ink. The ink will not contain a volatile solvent, thus eliminating hydrocarbon emissions.

Electron beam drying utilizes electron-induced polymerization. The procedure requires inks composed of monomers or prepolymers which will solidify when induced by the beam.

Ultra-Violet drying utilizes light between 2400 to 3600 angstroms to activate monomer-based inks that polymerize rapidly. Hydrocarbons are eliminated, but the monomer-based inks are more expensive, the inks are not readily removed during paper reclamation, and ozone is produced in the process.

2. Ink Modification:

Aqueous inks are used in some flexographic operations. A disadvantage of an aqueous system is the relatively high latent heat of water. This limits press speeds when conventional dryers are employed. The application of microwave drying has enabled press speeds to increase.

Solventless inks are dried by thermally induced polymerization which appreciably reduces hydrocarbon emissions. The ink can be adapted to present equipment without modification. Since lower oven temperatures can be used, press speeds can be increased.

3. Conventional Air Pollution Control Equipment:

Exhaust gases from gravure and printing operations in general are treated with conventional pollution control equipment. The three main types of processes utilized are:

1. thermal combustion,
2. catalytic combustion, and
3. adsorption.

Thermal combustion incinerates the hydrocarbon emissions from the collective gravure vents in a gas or oil fired flame. The gases are preheated to 600°F to 900°F and incinerated at 1200°F to 1600°F. Fuel consumption is dependent upon the amount of heat exchange employed and the operating temperature. Thermal incinerators are capable of operating continuously at efficiencies of 90% to 99%. Figure IV-19(1)358 presents a flow diagram for thermal combustion.

Catalytic combustion causes flameless oxidation of the undesired hydrocarbons from the rotogravure exhaust. The oxidation occurs with a catalyst of a platinum group metal deposited on a ceramic base or metal ribbon. Figure IV-20(1)359 is a schematic of a catalytic incinerator. Efficiencies range between 85% and 95% depending on the application.

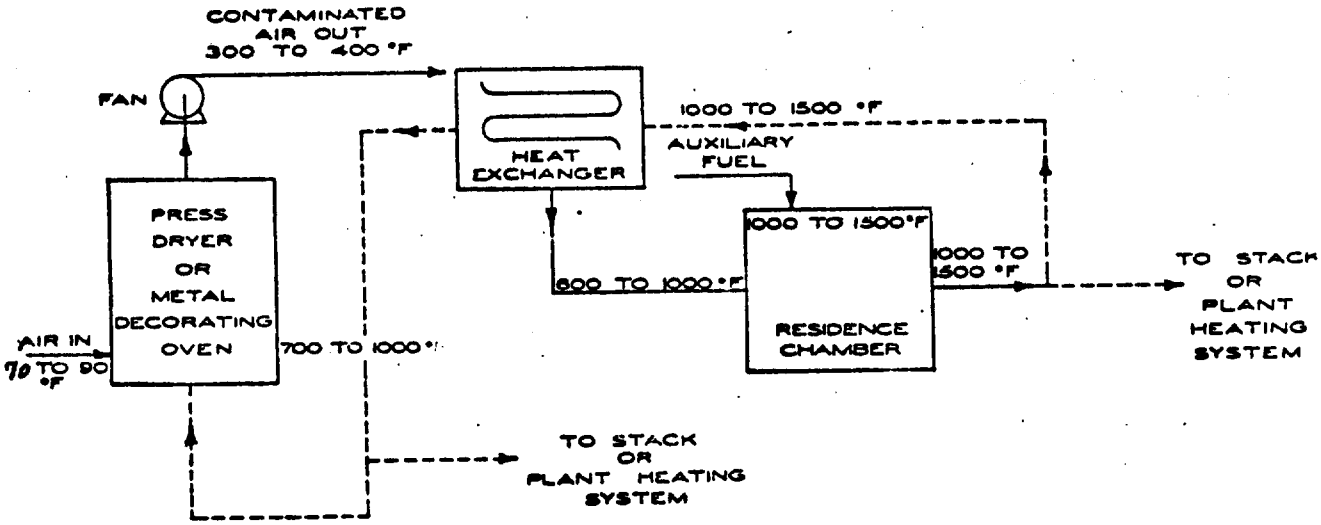

Figure IV-19: Flow Diagram for Thermal Combustion Including Possibilities for Heat Recovery

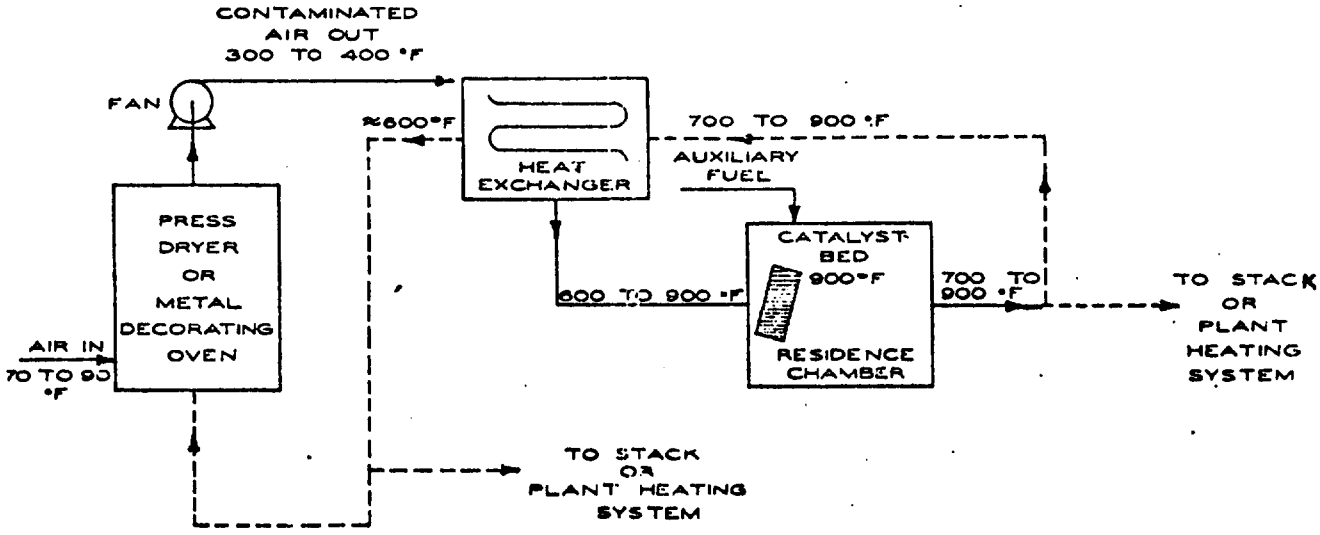

Figure IV-20: Flow Diagram for Catalytic Combustion Including Possibilities for Heat Recovery

Adsorption is the removal of hydrocarbons from a gas stream by means of an activated bed of carbon. When the adsorptive capacity of the bed is reached, the gas stream is diverted to an alternate bed. The original bed is regenerated with steam or hot air. If hydrocarbon solvent is not miscible in water, it can be recovered by decantation; otherwise distillation is necessary. Figure IV-21[1]360 presents a flow diagram for an adsorption process. A well designed bed will absorb 15% of its own weight of solvent before regeneration is required. The efficiencies of a well designed bed are 99%.

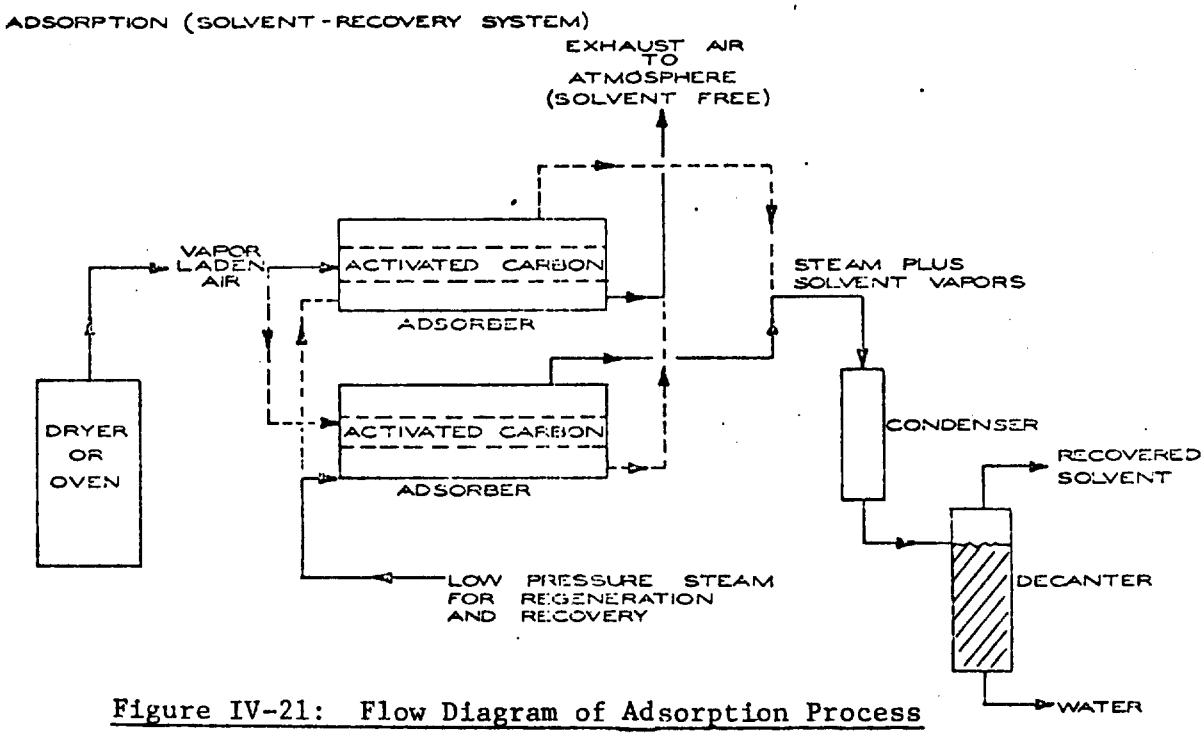

Figure IV-21: Flow Diagram of Adsorption Process

F. New Source Performance Standards and Regulation Limitations:

New Source Performance Standards (NSPS): No New Source Performance Standards have been promulgated for gravure printing.

State Regulations for New and Existing Sources: Currently, hydrocarbon emission regulations are patterned after Los Angeles Rule 66 and Appendix B type legislation. Organic solvent useage is categorized by three basic process types. These are, (1) heating of articles by direct flame or baking with any organic solvent, (2) discharge into the atmosphere of photochemically reactive solvents by devices that employ or apply the solvent, (also includes air or heated drying of articles for the first twelve hours after removal from #1 type device) and (3) discharge into the atmosphere of non-photochemically reactive solvents. For the purposes of Rule 66, reactive solvents are defined as solvents of more than 20% by volume of the following:

1. A combination of hydrocarbons, alcohols, aldehydes, esters, ethers or ketones having an olefinic or cyclo-olefinic type of unsaturation: 5 per cent
2. A combination of aromatic compounds with eight or more carbon atoms to the molecule except ethylbenzene: 8 per cent
3. A combination of ethylbenzene, ketones having branched hydrocarbon structures, trichloroethylene or toluene: 20 per cent

Rule 66 limits emissions of hydrocarbons according to the three process types. These limitations are as follows:

Process	lbs/day	& lbs/hour
1. heated process	15	3
2. unheated photochemically reactive	40	8
3. non-photochemically reactive	3000	450

Appendix B (Federal Register, Vol. 36, No. 158 - Saturday, August 14, 1971) limits the emission of photchemically reactive hydrocarbons to 15 lbs/day and 3 lbs/hr. Reactive solvents can be exempted from the regulation if the solvent is less than 20% of the total volume of a water based solvent. Solvents which have shown to be virtually unreactive are, saturated halogenated hydrocarbons, perchloroethylene, benzene, acetone and c_1-c_5n-paraffins.

For both Appendix B and Rule 66 type legislation if 85% control has been demonstrated the regulation has been met by the source even if the lbs/day and lbs/hr values have been exceeded. Most states have regulations that limit the emissions from handling and use of organic solvents. Alabama, Connecticut and Ohio have regulations patterned after Los Angeles Rule 66. Indiana and Louisiana have regulations patterned after Appendix B. Some states such as North Carolina have an organic solvent regulation which is patterned after both types of regulations.

Table IV-8 presents the uncontrolled and controlled emissions and limitations from rotogravure printing operations.

TABLE IV-8

HYDROCARBON EMISSIONS AND LIMITATIONS FROM ROTOGRAVURE PRINTING

Type of Operation & Control	% Control	Emissions		Limitations	
		lbs/hr	kg/hr	lbs/hr	kg/hr
Rotogravure Printing, Coated Paper Uncontrolled	0	15	6.8	3	1.4
Rotogravure Printing, Non-Coated Paper, Uncontrolled	0	20	9.1	3	1.4
Rotogravure Printing, Coated Paper, with Thermal Combustion	90-99	1.5-.15	.7-.07	3	1.4
Rotogravure Printing, Non-Coated Paper, with Thermal Combustion	90-99	2 -.2	.9-.1	3	1.4
Rotogravure Printing, Coated Paper, with Catalytic Combustion	85-95	2.3-.75	1.0-.3	3	1.4
Rotogravure Printing, Non-Coated Paper, with Catalytic Combustion	85-95	3-1	1.4-.5	3	1.4
Rotogravure Printing, Coated Paper, with Adsorption	99	.15	.07	3	1.4
Rotogravure Printing, Non-Coated Paper, with Adsorption	99	.2	.1	3	1.4

Potential Source Compliance and Emission Limitations: Hydrocarbon emission limitations are not based on process weight. Rotogravure printing operations, even well controlled, could violate the 3 lbs/hour limitation if the number of presses and press speed are such that the emissions could average more than 3 lbs/hr.

The Environment Reporter was used to update the emission limitations.

G. References:

References used in preparation of this summary include the following:

1. Air Pollution Control Technology and Costs in Seven Selected Areas, Industrial Gas Cleaning Institute, EPA Contract No. 68-02-0289, December 1973.

2. Background Information for Stationary Source Categories, Provided by EPA, Joseph J. Sableski, Chief, Industrial Survey Section, Industrial Studies Branch, November 3, 1972.

3. Priorization of Air Pollution From Industrial Surface Coating Operations, Monsanto Research Corporation, Contract No. 68-02-0320, February 1975.

The following references were consulted but not used to directly develop the information on gravure printing.

4. Evaluations of Emissions and Control Technologies in the Graphic Arts Industries, Phase II: Web-Offset and Metal Decorating Processes, R. R. Gadomski, A. V. Gimbrone, Mary P. David, and W. J. Green, Contract No. 68-02-0001, May 1973.

5. Organic Compound Emission Sources, Emission Control Techniques and Emission Limitation Guidelines, EPA, June 1974.

6. Hydrocarbon Pollutant System Study, Volume I - Stationary Sources, Effects, and Control, October 20, 1972, MSA Research Corporation.

A. Source Category: IV Evaporation Losses

B. Sub Category: Graphic Arts (Letterpress)

C. Source Description:

Letterpress printing is the oldest and most basic form of printing and still predominates in periodical and newspaper publishing. Approximately 93% of the nation's newspapers are printed by this process.(1)332 In letterpress printing, ink is transferred to the paper from the image surface. This surface is raised relative to the nonprinting surface of the plate. Originally, letterpress was done with a flatbed image carrier, and the image was hand set type. Currently, the image is transferred to a mat which can be curved. Then a cylindrical plate is made from the curved mat.(2)5

Letterpress printing currently is accomplished in two similar but different processes. The composition of the ink and the inclusion of drying are the main areas where the processes differ. The two types of letterpress printing are:

1. letterpress, publication, and
2. letterpress, newspaper.

1. Letterpress, publication uses a paper web that is printed on one side at a time, and the web is dried after each color is printed. When four colors are printed, a procedure called "double ending" is employed. The web processes through one press and one dryer, is turned over and returned to the same press where it was adjacent to the first pass on the same cylinder. In this manner, only four presses and four dryers are required for four-color, two-sided printing. The dryer may be either a hot air dryer where a minimum of flame impingement occurs, or an all-flame dryer where direct impingement of the flame on the web occurs. The composition of the dryer emissions depends on the type of dryer employed. In the hot air dryer, very little solvent decomposition occurs. As the amount of flame impingement increases, the quantity of solvent decomposition also increases.

   The exhaust and solvent emission rates shown in Figure IV-22(1)345 represent one color, two-sided printing. In an actual four-color operation, four dryers would be manifolded together to a common exhaust stack.

   Letterpress publication ink is similar in composition to lithographic ink (heatset - 35% aliphatic solvent). The composition of hydrocarbon emissions depends on the type of dryer.(1)347

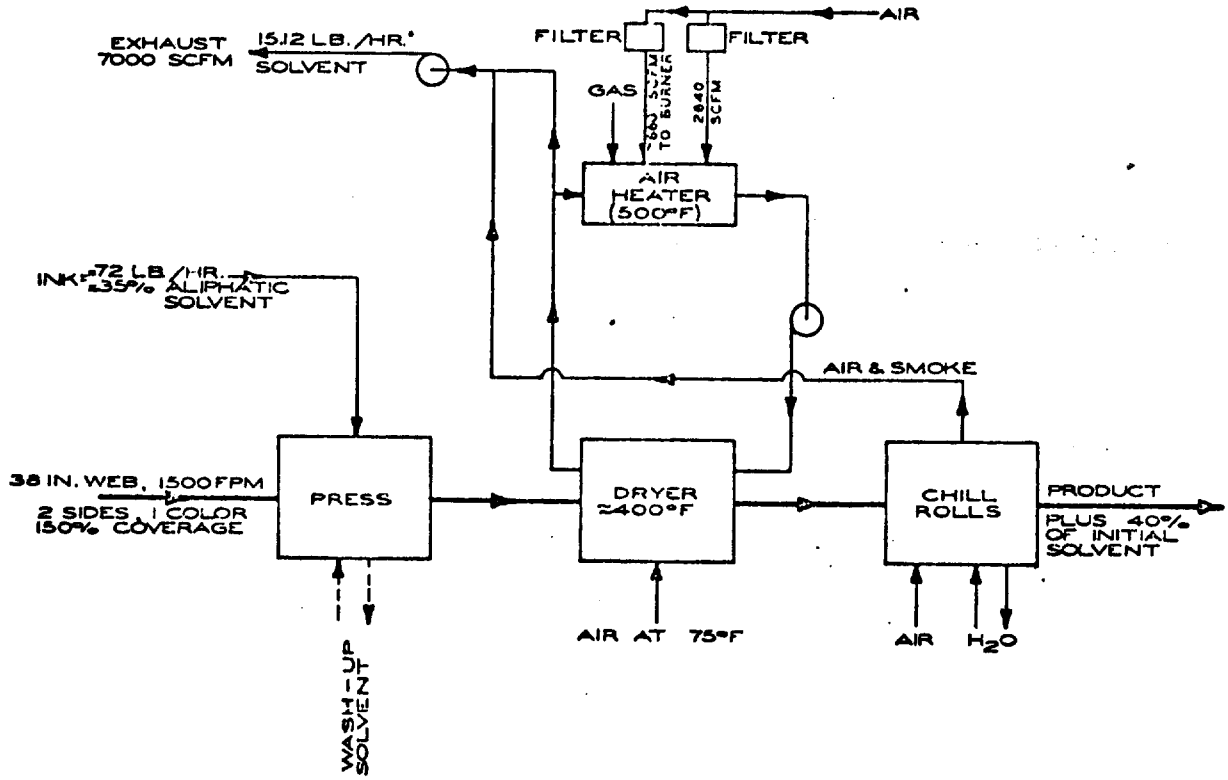

Figure IV-22: Web Letterpress, Publication

2. Letterpress, newspaper printing operations use oxidative drying inks which contain little or no solvent. The exhaust gases from these operations are not a source of hydrocarbon emissions. The only substances emitted from these operations are ink mist and paper dust. Figure IV-23[1]346 presents a schematic of a letterpress, newspaper printing process.

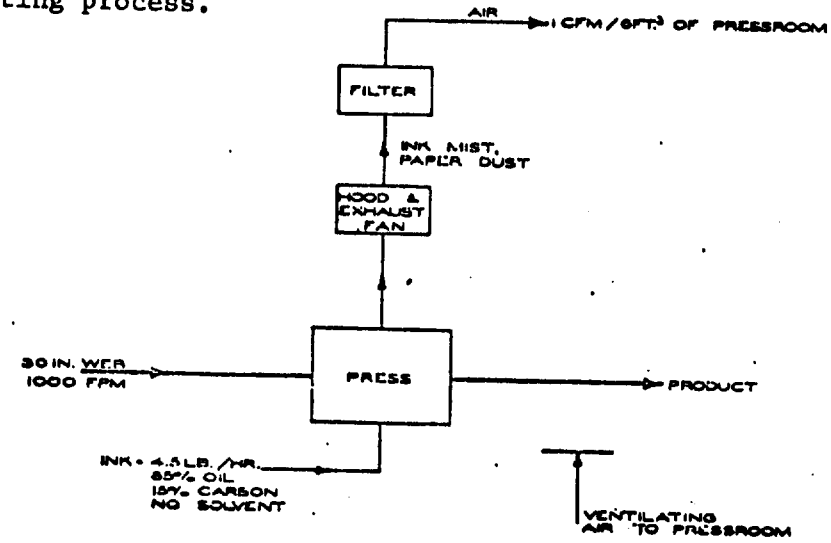

Figure IV-23: Web Letterpress, Newspaper

D. Emission Rates:

The major points of hydrocarbon emissions from letterpress printing are:

1. hot air dryer,
2. press unit, and
3. chill rolls.

In letterpress and printing operations in general, the ink is the major source of hydrocarbons. Printing inks consist of three major components:

1. Pigments, which produce the desired colors, are composed of finely divided organic and inorganic materials.
2. Resins, which bind the pigments to the substrate, are composed of organic resins and polymers.
3. Solvents, which dissolve or disperse the resins and pigments, are usually composed of organic compounds. The solvent is removed from the ink and emitted to the atmosphere during the drying process.

The solvents used in ink dilution are classified into five general categories according to the chemical composition.(2)335

A. Benzene, toluene, xylene, ethylbenzene, unsaturates, and mixtures with aromatic content greater than 25% by volume.
B. Normal and isoparaffins, cycloparaffins, mineral spirits containing less than 15% aromatics.
C. Methanol, ethanol, propanol, isopropanol, butanol, isobutanol, glycols, esters, ketones.
D. Trichloroethylene, trichloroethane, methylene chloride.
E. Nitroparaffins and dimethyl formamide.
F. Miscellaneous

Table IV-9 presents the volume breakdown in hundreds of gallons of solvent consumed for ink dilution by process and solvent type.(2)338

TABLE IV-9

VOLUME BREAKDOWN OF SOLVENT CONSUMED FOR INK DILUTION BY PRINTING PROCESS AND SOLVENT TYPE (1968)

PRINTING PROCESS	SOLVENT TYPE (HUNDRED GALLONS) A	B	C	D	E	F	TOTAL
Lithography	14,972	23,941	16,091	38	723	408	56,773
Letterpress	98	444	399	52	–	1	994
Flexography	58	606	10,180	–	1	170	11,015
Gravure	10,089	24,637	12,868	–	12	–	47,606
Screen Printing	34	173	85	–	–	145	437
Total	25,251	49,801	40,223	90	736	724	116,825

A typical letterpress printing operation as depicted in Figure IV-22 operating under the conditions listed would have hydrocarbon emissions according to press speed as presented in Figure IV-24.

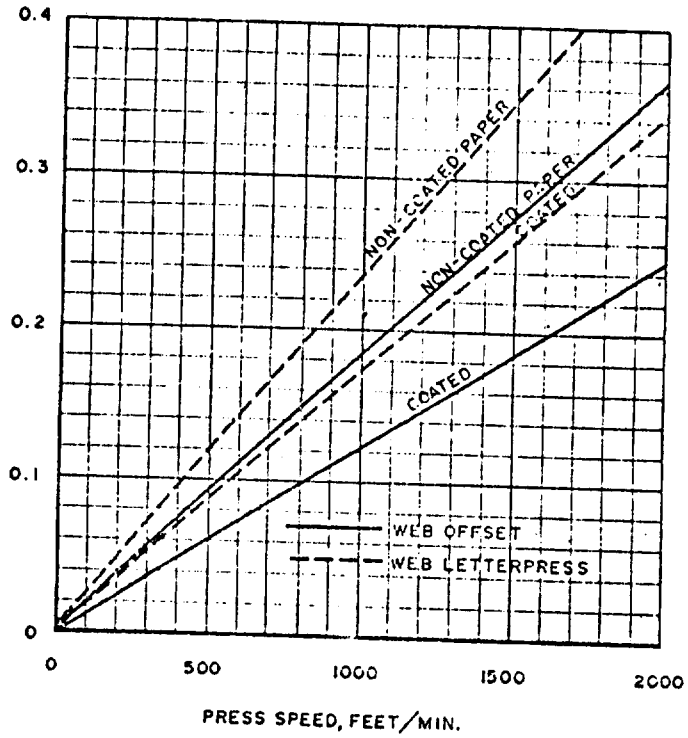

Figure IV-24: Emission Rates from Web Offset and Web Letterpress Employing Heatset Inks

Table IV-9A presents the uncontrolled and controlled emissions in pounds/hour and kilograms/hour for the typical letterpress printing operations as depicted in Figure IV-24. The emissions listed are for a typical operation. These could vary even with the same equipment. The exact solvent structure of the ink, the percentage of the web that is covered with ink, the number of colors applied and dryers used, and press speed affect the hydrocarbon emissions.

E. Control Equipment:

Control of hydrocarbon emissions from letterpress and printing operations in general are categorized according to the following:(2)354

1. process modification,
2. ink modification, and
3. conventional air pollution control equipment.

TABLE IV-9A

HYDROCARBON EMISSIONS FROM LETTERPRESS PUBLICATION PRINTING

Type of Operation & Control	% Control	Press Speed ft/min	Emissions lbs/hr	Emissions kg/hr
Letterpress Printing, Coated Paper, Uncontrolled	0	1500	.26	.12
Letterpress Printing, Noncoated Paper, Uncontrolled	0	1500	.35	.16
Letterpress Printing, Coated Paper with Thermal Combustion	90-99	1500	.026-.0026	.012-.0012
Letterpress Printing, Noncoated Paper with Thermal Combustion	90-99	1500	.035-.0035	.016-.0016
Letterpress Printing, Coated Paper with Catalytic Combustion	85-95	1500	.039-.013	.018-.006
Letterpress Printing, Noncoated Paper with Catalytic Combustion	85-95	1500	.053-.018	.024-.006
Letterpress Printing, Coated Paper with Adsorption	99	1500	.0026	.0012
Letterpress Printing, Noncoated Paper with Adsorption	99	1500	.0035	.0016

1. Process Modification:

Modification of the drying process would decrease hydrocarbon emissions. Several methods of drying are being developed which could greatly reduce hydrocarbon emissions:

Microwave drying increases the temperature of the ink by application of electromagnetic energy. Since fuel is not directly consumed, the oven exhaust will not contain combustion products. However, solvent vapors would be emitted if conventional inks are used.

Infrared drying causes a free radical polymerization mechanism to occur which utilizes a nonvolatile monomer-based ink. The ink will not contain a volatile solvent, thus eliminating hydrocarbon emissions.

Electron beam drying utilizes electron induced polymerization. The procedure requires inks composed of monomers or prepolymers which will solidify when induced by the beam.

Ultraviolet drying utilizes light between 2400 to 3600 angstroms to activate monomer-based inks that polymerize rapidly. Hydrocarbons are eliminated, but the monomer-based inks are more expensive, the inks are not readily removed during paper reclamation, and ozone is produced in the process.

2. Ink Modification:

Aqueous inks are used in some flexographic operations. A disadvantage of an aqueous system is the relatively high latent heat of water. This limits press speeds when conventional dryers are employed. The application of microwave drying has enabled press speeds to increase.

Solventless inks are dried by thermally induced polymerization which appreciably reduces hydrocarbon emissions. The ink can be adapted to present equipment without modification. Since lower oven temperatures can be used, press speeds can be increased.

3. Conventional Air Pollution Control Equipment:

Exhaust gases from letterpress and printing operations in general are treated with conventional pollution control equipment. The three main types of processes utilized are:

a. thermal combustion,
b. catalytic combustion, and
c. adsorption.

Thermal combustion incinerates the hydrocarbon emissions from the collective letterpress vents in a gas or oil fired flame. The gases are preheated to 600°F to 900°F and incinerated at 1200°F to 1600°F. Fuel consumption is dependent upon the amount of heat exchange employed and the operating temperature. Thermal incinerators are capable of operating continuously at efficiencies of 90% to 99%. Figure IV-25[1]358 presents a flow diagram for thermal combustion.

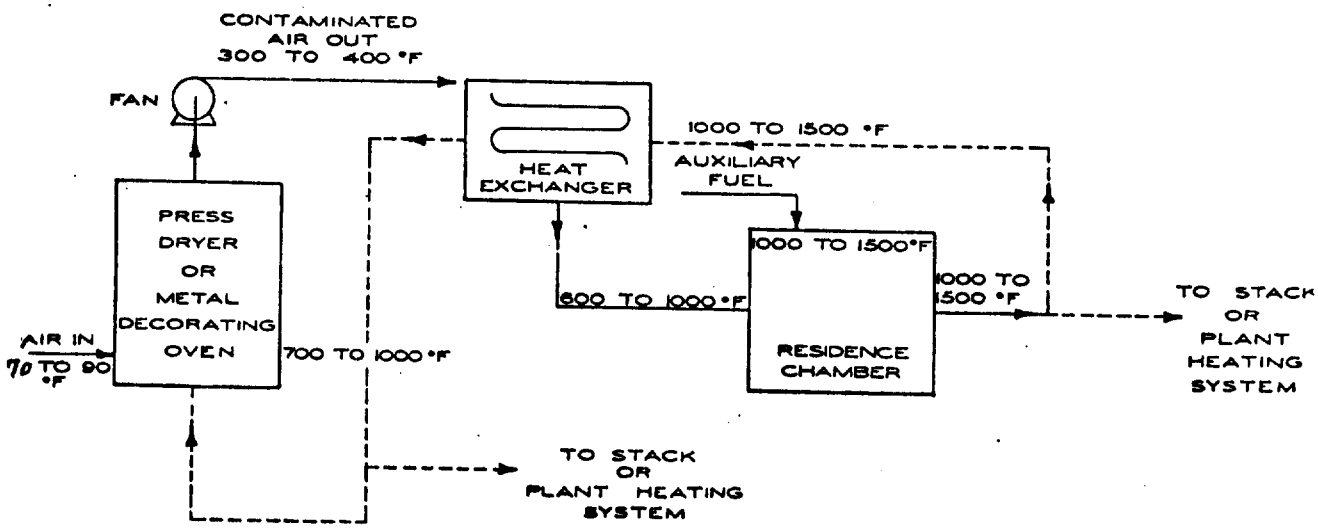

Figure IV-25: Flow Diagram for Thermal Combustion Including Possibilities for Heat Recovery

Catalytic combustion causes flameless oxidation of the undesired hydrocarbon from the letterpress exhaust. The oxidation occurs with a catalyst of a platinum group metal deposited on a ceramic base or metal ribbon. Figure IV-26(1)359 is a schematic of a catalytic incinerator. Efficiencies range between 85% and 95% depending on the application.

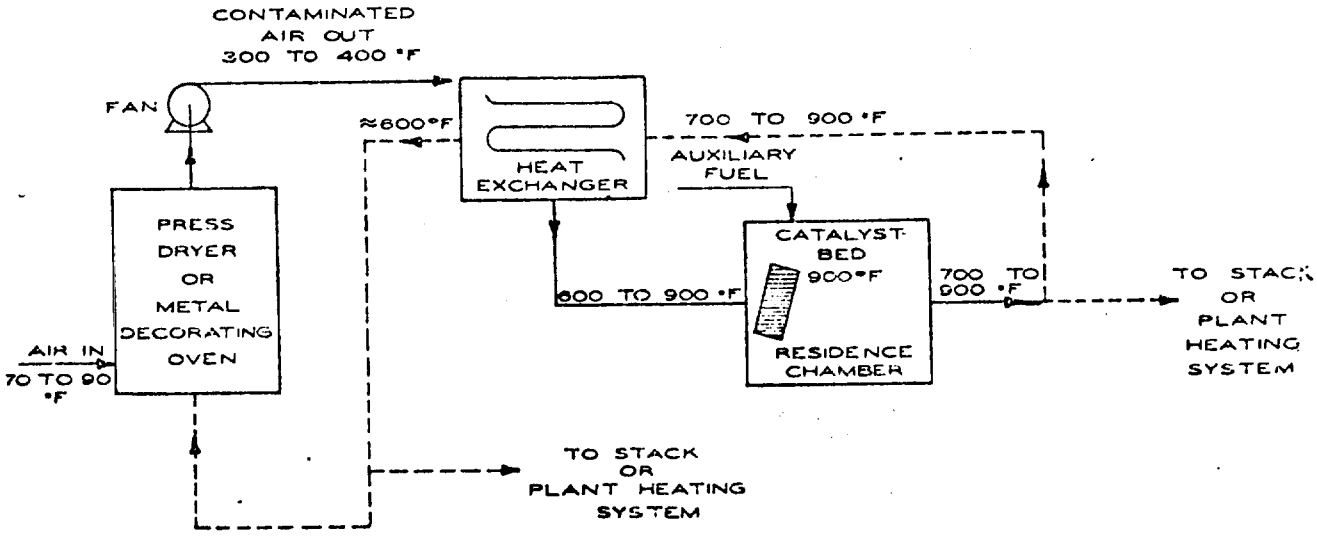

Figure IV-26: Flow Diagram for Catalytic Combustion Including Possiblities for Heat Recovery

Adsorption is the removal of hydrocarbons from a gas stream by means of an activated bed of carbon. When the adsorptive capacity of the bed is reached, the gas stream is diverted to an alternate bed. The original bed is regenerated with steam or hot air. If hydrocarbon solvent is not miscible in water, it can be recovered by decantation; otherwise, distillation is necessary. Figure IV-27(1)360 presents a flow diagram for an adsorption process. A well-designed bed will absorb 15% of its own weight of solvent before regeneration is required. The efficiencies of a well-designed bed are 99%.

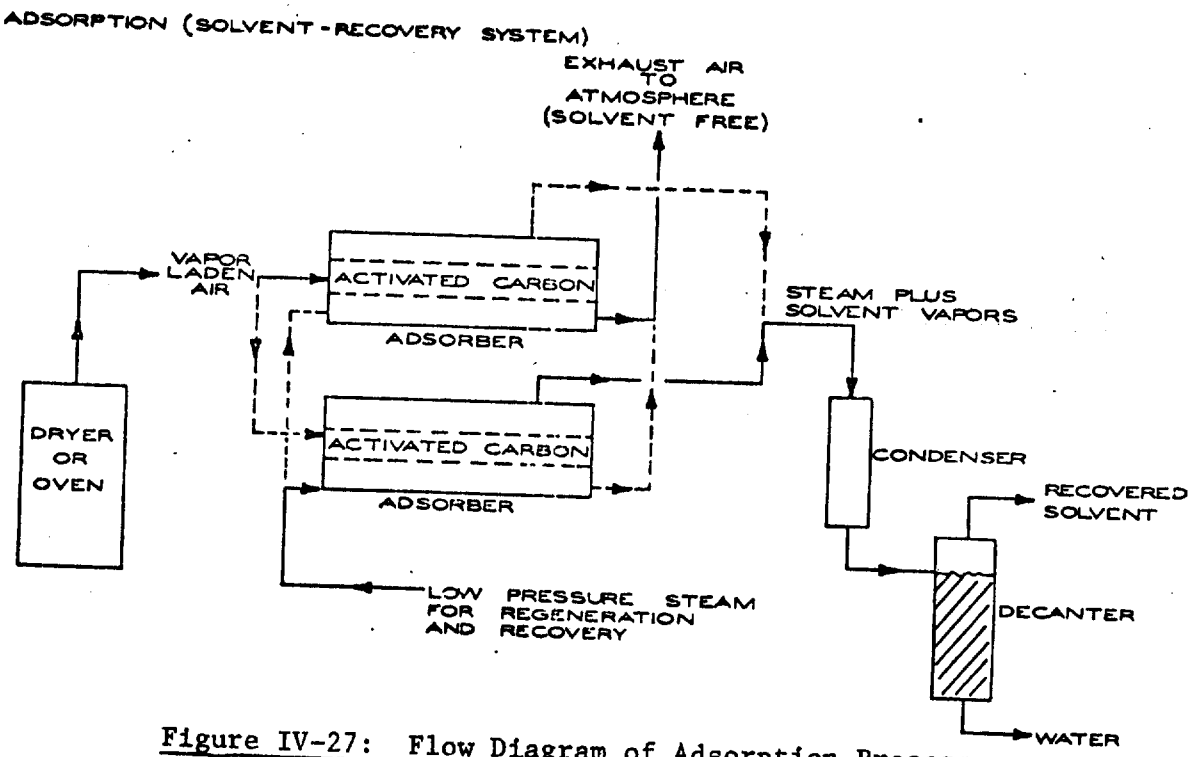

Figure IV-27: Flow Diagram of Adsorption Process

F. New Source Performance Standards and Regulation Limitations:

New Source Performance Standards (NSPS): No New Source Performance Standards have been promulgated for letterpress printing.

State Regulations for New and Existing Sources: Currently, hydrocarbon emission regulations are patterned after Los Angeles Rule 66 and Appendix B type legislation. Organic solvent useage is categorized by three basic process types. These are, (1) heating of articles by direct flame or baking with any organic solvent, (2) discharge into the atmosphere of photochemically reactive solvents by devices that employ or apply the solvent, (also includes air or heated drying of articles for the first twelve hours after removal from #1 type device) and (3) discharge into the atmosphere of non-photochemically reactive solvents. For the purposes of Rule 66, reactive solvents are defined as solvents of more than 20% by volume of the following:

1. A combination of hydrocarbons, alcohols, aldehydes, esters, ethers or ketones having an olefinic or cyclo-olefinic type of unsaturation: 5 per cent
2. A combination of aromatic compounds with eight or more carbon atoms to the molecule except ethylbenzene: 8 per cent
3. A combination of ethylbenzene, ketones having branched hydrocarbon structures, trichloroethylene or toluene: 20 per cent

Rule 66 limits emissions of hydrocarbons according to the three process types. These limitations are as follows:

Process	lbs/day	& lbs/hour
1. heated process	15	3
2. unheated photochemically reactive	40	8
3. non-photochemically reactive	3000	450

Appendix B (Federal Register, Vol. 36, No. 158 - Saturday, August 14, 1971) limits the emission of photchemically reactive hydrocarbons to 15 lbs/day and 3 lbs/hr. Reactive solvents can be exempted from the regulation if the solvent is less than 20% of the total volume of a water based solvent. Solvents which have shown to be virtually unreactive are, saturated halogenated hydrocarbons, perchloroethylene, benzene, acetone and c_1-c_5n-paraffins.

For both Appendix B and Rule 66 type legislation if 85% control has been demonstrated the regulation has been met by the source even if the lbs/day and lbs/hr values have been exceeded. Most states have regulations that limit the emissions from handling and use of organic solvents. Alabama, Connecticut and Ohio have regulations patterned after Los Angeles Rule 66. Indiana and Louisiana have regulations patterned after Appendix B. Some states such as North Carolina have an organic solvent regulation which is patterned after both types of regulations.

Table IV-10 presents the uncontrolled and controlled emissions and limitations from letterpress printing operations.

TABLE IV-10

HYDROCARBON EMISSIONS AND LIMITATIONS FROM LETTERPRESS PRINTING

Type of Operation & Control	% Control	Emissions		Limitations	
		lbs/hr	kg/hr	lbs/hr	kg/hr
Letterpress Printing, Coated Paper, Uncontrolled	0	.26	.12	3	1.4
Letterpress Printing, Noncoated Paper, Uncontrolled	0	.35	.16	3	1.4
Letterpress Printing, Coated Paper with Thermal Combustion	90-99	.026-.0026	.012-.0012	3	1.4
Letterpress Printing, Noncoated Paper with Thermal Combustion	90-99	.035-.0035	.016-.0016	3	1.4
Letterpress Printing, Coated Paper with Catalytic Combustion	85-95	.039-.013	.018-.006	3	1.4
Letterpress Printing, Noncoated Paper with Catalytic Combustion	85-95	.053-.018	.024-.008	3	1.4
Letterpress Printing, Coated Paper with Adsorption	99	.0026	.0012	3	1.4
Letterpress Printing, Noncoated Paper with Adsorption	99	.0035	.0016	3	1.4

Potential Source Compliance and Emission Limitations: Hydrocarbon emissions limitations are not based on process weight. Letterpress printing operations as outlined in Section D, even uncontrolled, will not violate the 3 lb/hr limitation. However, it is conceivable to have a number of presses and dryers manifolded together where control would be necessary to meet the 3 lbs/hr limitation.

The Environment Reporter was used to update the emission limitations.

G. References:

The literature used to develop the information on letterpress printing is as follows:

1. Air Pollution Control Technology and Costs in Seven Selected Areas, Industrial Gas Cleaning Institute, EPA Contract No. 68-02-0289, December 1973.

2. Background Information for Stationary Source Categories, Provided by EPA, Joseph J. Sableski, Chief, Industrial Survey Section, Industrial Studies Branch, November 3, 1972.

3. Priorization of Air Pollution From Industrial Surface Coating Operations, Monsanto Research Corporation, Contract No. 68-02-0320, February 1975.

The following references were consulted but not used to directly develop the information on letterpress printing.

4. Evaluations of Emissions and Control Technologies in the Graphic Arts Industries, Phase II: Web-Offset and Metal Decorating Processes, R. R. Gadomski, A. V. Gimbrone, Mary P. David, and W. J. Green, Contract No. 68-02-0001, May 1973.

5. Organic Compound Emission Sources, Emission Control Techniques and Emission Limitation Guidelines, EPA, June 1974.

6. Hydrocarbon Pollutant System Study, Volume I - Stationary Sources, Effects, and Control, October 20, 1972, MSA Research Corporation.

A. Source Category: IV Evaporation Losses

B. Sub Category: Graphic Arts (Metal Coating)

C. Source Description:

Metal Coating is the printing with ink of an image on a sheet or object. The image is usually applied to coated metal with a lithographic press. Clear varnish is then applied directly over the wet ink for protection of the printed image. The entire process involves three operations:

1. application of the undercoating to the bare metal,
2. printing of the image to the dried coating, and
3. application of the clear varnish over the image.

The base coat is roller coated onto the metal and contains 50-80% solvents by volume. Figure IV-28 is a schematic of a metal coating operation. The base coat is baked at 350°F-425°F. The quantity of the solvent emitted from the oven is dependent on the thickness and solvent content of the coating. The ovens are operated from 10% to 25% of the lower explosive limit.

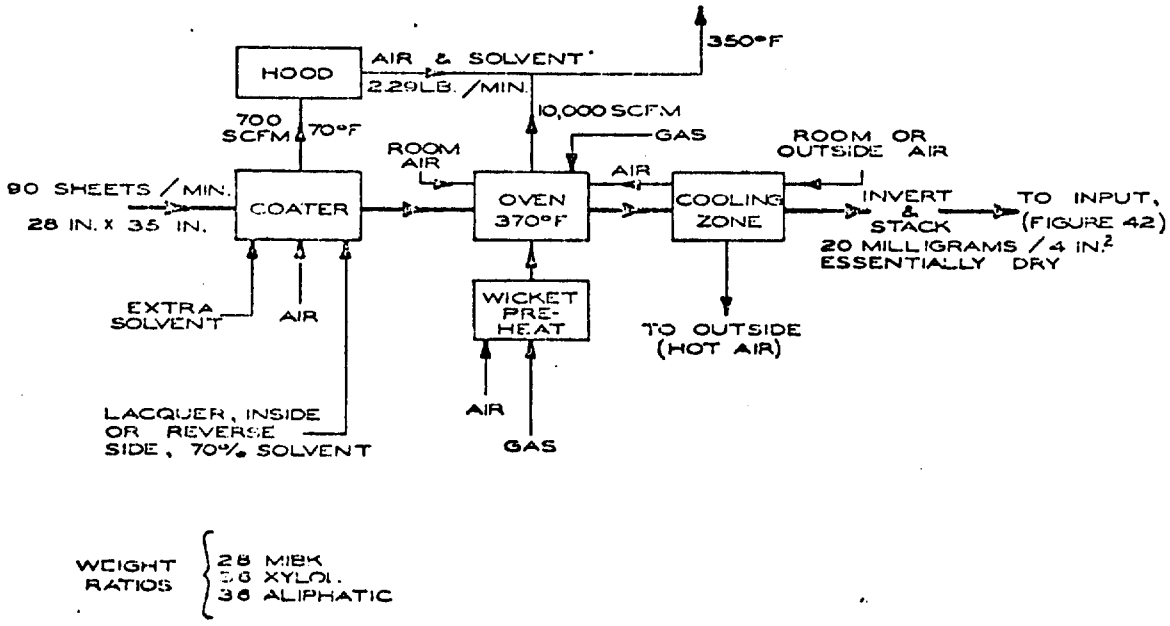

Figure IV-28: Metal Sheet Coating Operation

The coated sheets are printed with lithographic inks containing very little if any solvent. The wet inked sheets are coated with a varnish containing 70-80% solvent and dried in wicket ovens at approximately 320°F. These ovens are operated at 10% to 25% of the lower explosive limit. Figure IV-29 is a schematic of the printing and overcoating operations for metal decorating. (1)350

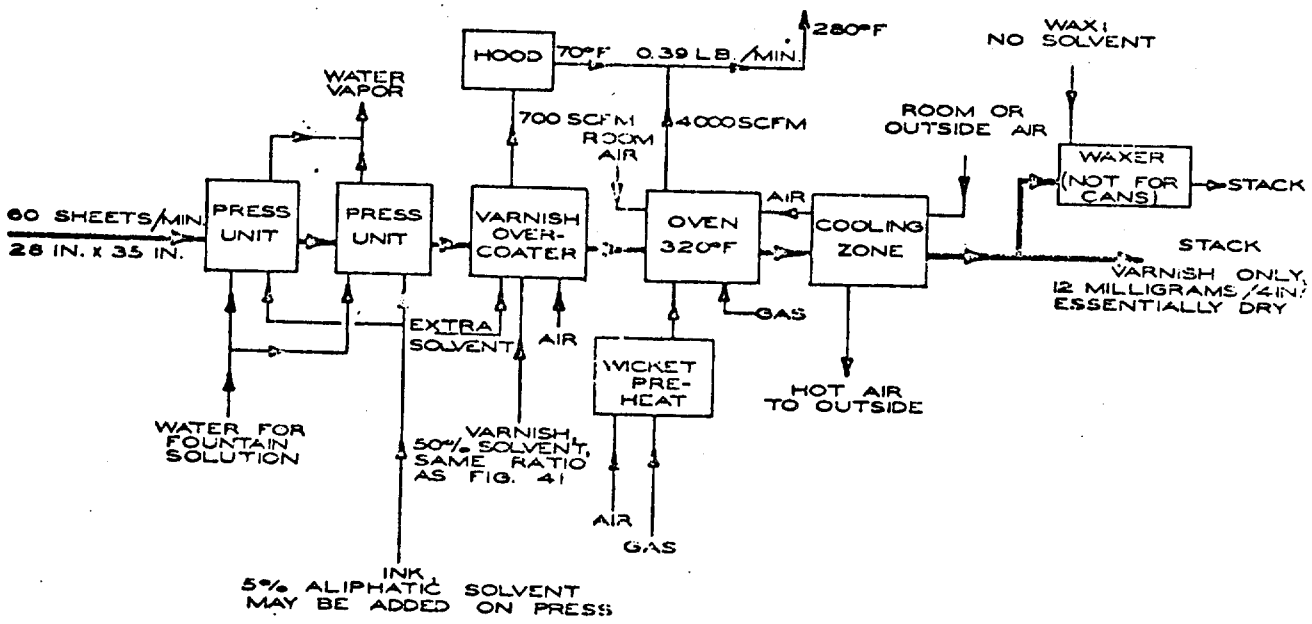

Figure IV-29: Metal Sheet Printing and Varnish Overcoating

D. Emission Rates:

The major points of hydrocarbon emissions in metal decorating printing are:

1. surface roller coating
2. oven exhaust, and
3. varnish overcoater operation.

The roller coating and varnish overcoating operations are sequential and comprise the bulk of the hydrocarbon emissions. The lithographic type inks used in metal decorating contain little solvent, and their emissions due to evaporation are insignificant.(2)3 The ovens are heated by oil or natural gas, and the exhaust contains the products of combustion in addition to the evaporated solvent.

Table IV-11 presents emission rates for the various operations of metal decorating from the ovens.(2)3 The thickness of the coatings and solvent content influence the amount of hydrocarbons in the emissions.

TABLE IV-11

HYDROCARBON EMISSIONS FROM METAL DECORATING

Type of Operation & Control	% Control	Range of Emissions	
		lbs/hr	kg/hr
Metal Decorating, Heated Oven Only	0	.2-1.0	.09-.5
Metal Decorating, Printing Only	0	.2-1.0	.09-.5
Metal Decorating, Printing with Varnish Application	0	4.0- 16.0	1.8- 7.3
Metal Decorating, Sizing (Lacquer)	0	6.0- 30.0	2.7-13.6
Metal Decorating, Coatings	0	4.0-122.0	1.8-55.3
Metal Decorating, Printing with Varnish Application, Thermal Incineration	90-99	.04-1.6	.02-.7
Metal Decorating, Coatings, Thermal Incineration	90-99	.4-12.2	.2-5.5

E. Control Equipment:

Control of hydrocarbon emissions from metal decorating are categorized according to the following:

1. reformulation of solvents, and
2. application of control equipment.

1. Reformulation of Solvents:

The solvents employed in the varnish and lacquer coatings are usually composed of methyl isobutzl ketone (MIBK), xylol and aliphatic solvents, all of which can be at least partially removed in the wicket ovens. The extent of solvent decomposition in the ovens is a function of the variation of temperature due to a variation of the mixing efficieicies of the hot and cold gases in the oven. (1)350 A substitution of non-photochemically reactive solvents or solvents that polymerize when heated would reduce or eliminate the problem of excessive hydrocarbon emissions.

2. Application of Control Equipment:

Thermal combustion incinerates hydrocarbon emissions from the wicket ovens in a gas or oil fired flame. The gases are preheated to 600°F to 900°F and incinerated at 1200°F to 1400°F.

Fuel consumption is dependent upon the amount of heat exchange employed and the operating temperature. Thermal incinerators are capable of operating continuously at efficiencies of 90% to 95%.[1]350 Figure IV-30[1]358 is a schematic of a thermal incinerator. Thermal combustion is used to incinerate fumes from the larger metal decorating operations.[2]3 Other types of control equipment applications are possible but were not summarized in Table IV-11.

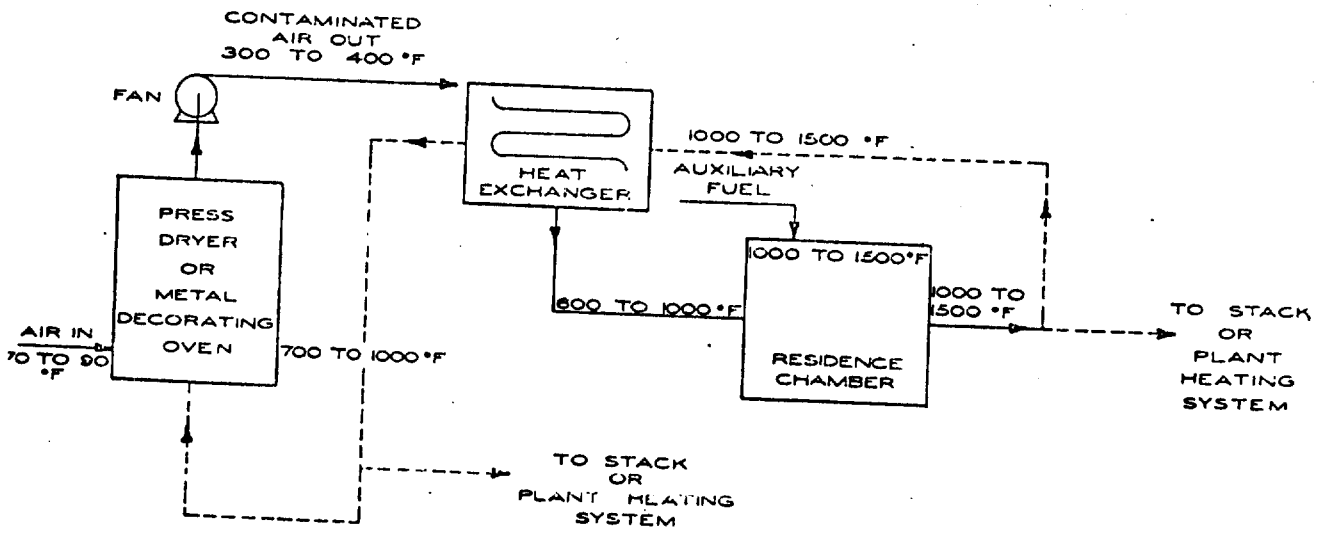

Figure IV-30: Flow Diagram for Thermal Combustion Including Possibilities for Heat Recovery

Catalytic combustion causes flameless oxidation of the undesired hydrocarbon from the metal decorating ovens. The oxidation occurs with a catalyst of a platinum group metal deposited on a ceramic base or metal ribbon. Figure IV-31[1]359 is a schematic of a catalytic incinerator. Efficiencies range between 85% and 95% depending on the application.

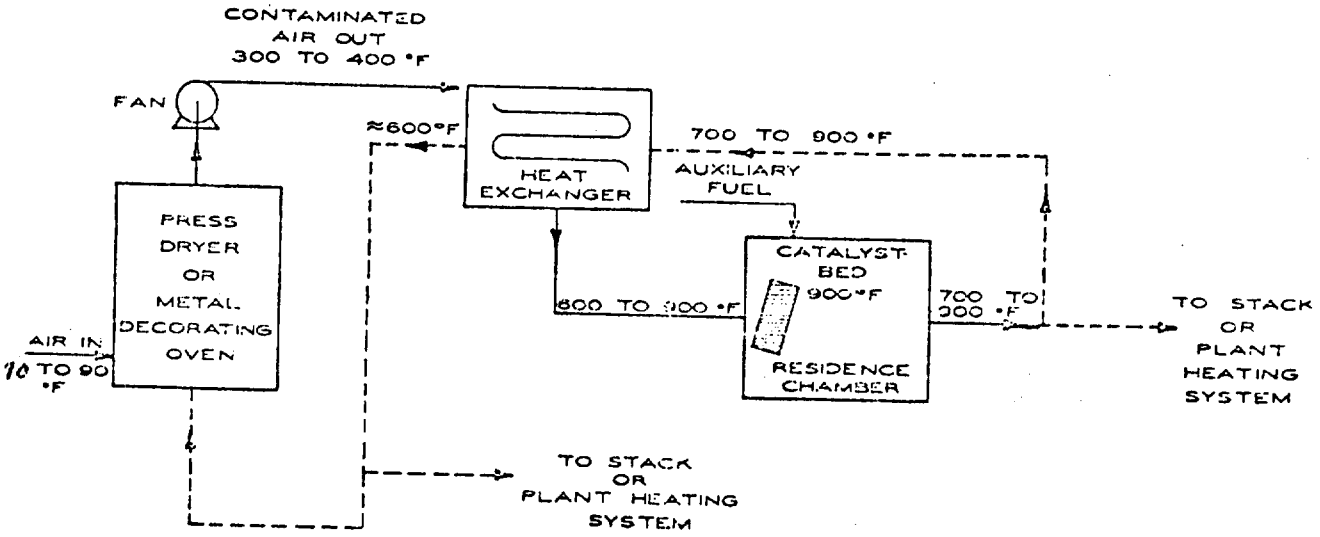

Figure IV-31: Flow Diagram for Catalytic Combustion Including Possibilities for Heat Recovery

Adsorption is the removal of hydrocarbons from a gas stream by means of an activated bed of carbon. When the adsorptive capacity of the bed is reached, the gas stream is diverted to an alternate bed. The original bed is regenerated with steam or hot air. If hydrocarbon solvent is not miscible in water, it can be recovered by decantation; otherwise distillation is necessary. Figure IV-32[1] presents a flow diagram for an adsorption process. A well designed bed will adsorb 15% of its own weight of solvent before regeneration is required. The efficiencies of a well designed bed are 99%.

360

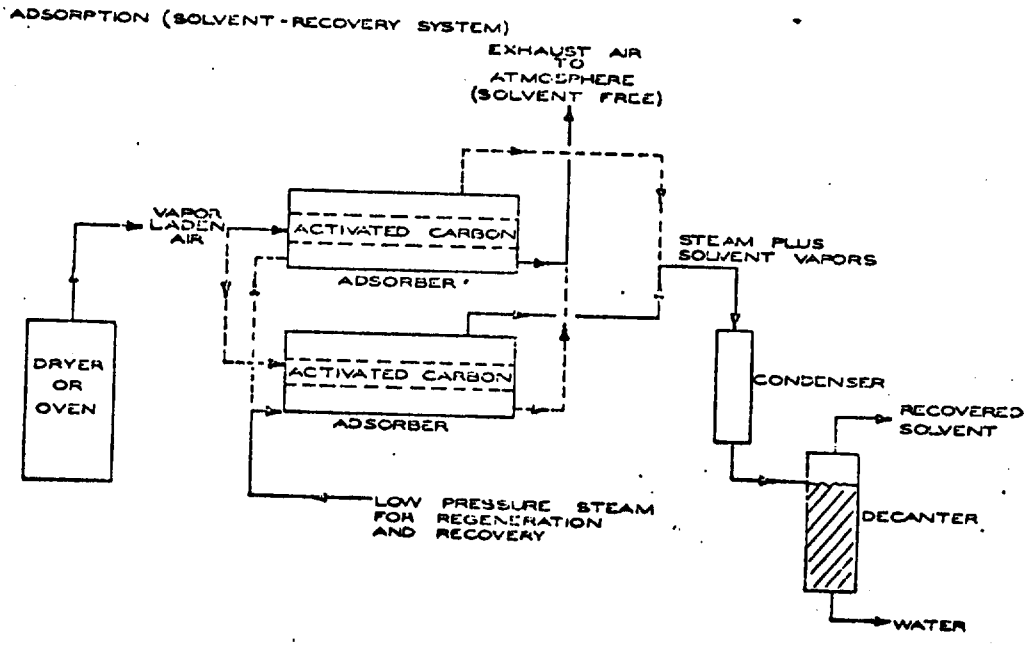

Figure IV-32: Flow Diagram of Adsorption Process

F. New Source Performance Standards and Regulation Limitations:

New Source Performance Standards (NSPS): No New Source Performance Standards have been promulgated for metal decorating.

State Regulations for New and Existing Sources: Currently, hydrocarbon emission regulations are patterned after Los Angeles Rule 66 and Appendix B type legislation. Organic solvent useage is categorized by three basic process types. These are, (1) heating of articles by direct flame or baking with any organic solvent, (2) discharge into the atmosphere of photochemically reactive solvents by devices that employ or apply the solvent, (also includes air or heated drying of articles for the first twelve hours after removal from #1 type device) and (3) discharge into the atmosphere of non-photochemically reactive solvents. For the purposes of Rule 66, reactive solvents are defined as solvents of more than 20% by volume of the following:

1. A combination of hydrocarbons, alcohols, aldehydes, esters, ethers or ketones having an olefinic or cyclo-olefinic type of unsaturation: 5 per cent
2. A combination of aromatic compounds with eight or more carbon atoms to the molecule except ethylbenzene: 8 per cent
3. A combination of ethylbenzene, ketones having branched hydrocarbon structures, trichloroethylene or toluene: 20 per cent

Rule 66 limits emissions of hydrocarbons according to the three process types. These limitations are as follows:

Process	lbs/day	& lbs/hour
1. heated process	15	3
2. unheated photochemically reactive	40	8
3. non-photochemically reactive	3000	450

Appendix B (Federal Register, Vol. 36, No. 158 - Saturday, August 14, 1971) limits the emission of photchemically reactive hydrocarbons to 15 lbs/day and 3 lbs/hr. Reactive solvents can be exempted from the regulation if the solvent is less than 20% of the total volume of a water based solvent. Solvents which have shown to be virtually unreactive are, saturated halogenated hydrocarbons, perchloroethylene, benzene, acetone and c_1-c_5n-paraffins.

For both Appendix B and Rule 66 type legislation if 85% control has been demonstrated the regulation has been met by the source even if the lbs/day and lbs/hr values have been exceeded. Most states have regulations that limit the emissions from handling and use of organic solvents. Alabama, Connecticut and Ohio have regulations patterned after Los Angeles Rule 66. Indiana and Louisiana have regulations patterned after Appendix B. Some states such as North Carolina have an organic solvent regulation which is patterned after both types of regulations.

Table IV-12 presents the uncontrolled and controlled emissions and limitations from metal decorating operations.

TABLE IV-12

HYDROCARBON EMISSIONS AND LIMITATIONS FROM METAL DECORATING

Type of Operation & Control	% Control	Emissions		Limitations	
		lbs/hr	kg/hr	lbs/hr	kg/hr
Metal Decorating, Heated Oven Only	0	.2-1.0	.09-.5	3	1.4
Metal Decorating, Printing Only	0	.2-1.0	.09-.5	3	1.4
Metal Decorating, Printing with Varnish Application	0	4.0- 16.0	1.8- 7.3	3	1.4
Metal Decorating, Sizing (Lacquer)	0	6.0- 30.0	2.7-13.6	3	1.4
Metal Decorating, Coatings	0	4.0-122.0	1.8-55.3	3	1.4
Metal Decorating, Printing with Varnish Application, Thermal Incineration	90-99	.04-1.6	.02-.7	3	1.4
Metal Decorating, Coatings, Thermal Incineration	90-99	.4-12.2	.2-5.5	3	1.4

Potential Source Compliance and Emission Limitations: Hydrocarbon emission limitations are not based on process weight. Metal surface coating, even well controlled, could violate the 3 lbs/hour limitation. Metal decorating operations are characterized by all being different from each other in terms of:

1. production rate,
2. solvent usage, and
3. control equipment.

The graphic arts printing of metal decorating will not violate the 3 lbs/hr limitation.

The Environment Reporter was used to update the emission limitations.

G. References:

The literature used to develop the information on metal decorating is as follows:

1. Air Pollution Control Technology and Costs in Seven Selected Areas, Industrial Gas Cleaning Institute, EPA Contract No. 68-02-0289, December 1973.

2. Background Information for Stationary Source Categories, Provided by EPA, Joseph J. Sableski, Chief, Industrial Survey Section, Industrial Studies Branch, November 3, 1972.

3. Priorization of Air Pollution From Industrial Surface Coating Operations, Monsanto Research Corporation, Contract No. 68-02-0320, February 1975.

The following references were consulted but not used to directly develop the information on metal decorating.

4. Evaluations of Emissions and Control Technologies in the Graphic Arts Industries, Phase II: Web-Offset and Metal Decorating Processes, R. R. Gadomski, A. V. Gimbrone, Mary P. David, and W. J. Green, Contract No. 68-02-0001, May 1973.

5. Organic Compound Emission Sources, Emission Control Techniques and Emission Limitation Guidelines, EPA, June 1974.

6. Hydrocarbon Pollutant System Study, Volume I - Stationary Sources, Effects, and Control, October 20, 1972, MSA Research Corporation.

A. Source Category: IV Evaporation Losses

B. Sub Category: Graphic Arts (Lithography)

C. Source Description:

Lithography printing is characterized by having the image area on the same plane as the non-image area. The image area chemically attracts ink while the non-image area chemically repels ink. The printing image is applied to a cylinder which transfers the inked image directly to the substrate. This process is direct lithography. The printing image can also be applied to a cylinder where the inked image is transferred to a rubber blanket cylinder which in the same revolution prints the wet inked image onto the substrate. This second process is called offset lithography. When a web or continuous roll of paper is employed with the offset process, it is called web-offset printing.(1)332

Web-offset printing employs a heatset ink. The web of paper travels through the presses where it is printed on both sides simultaneously. The wet web is passed through a dryer (~400°F) where approximately 60% of the initial solvent is removed. The web passes over the chill rolls where it is cooled prior to folding and cutting. Figure IV-33(1)342 presents a schematic of a web-offset, publication process.

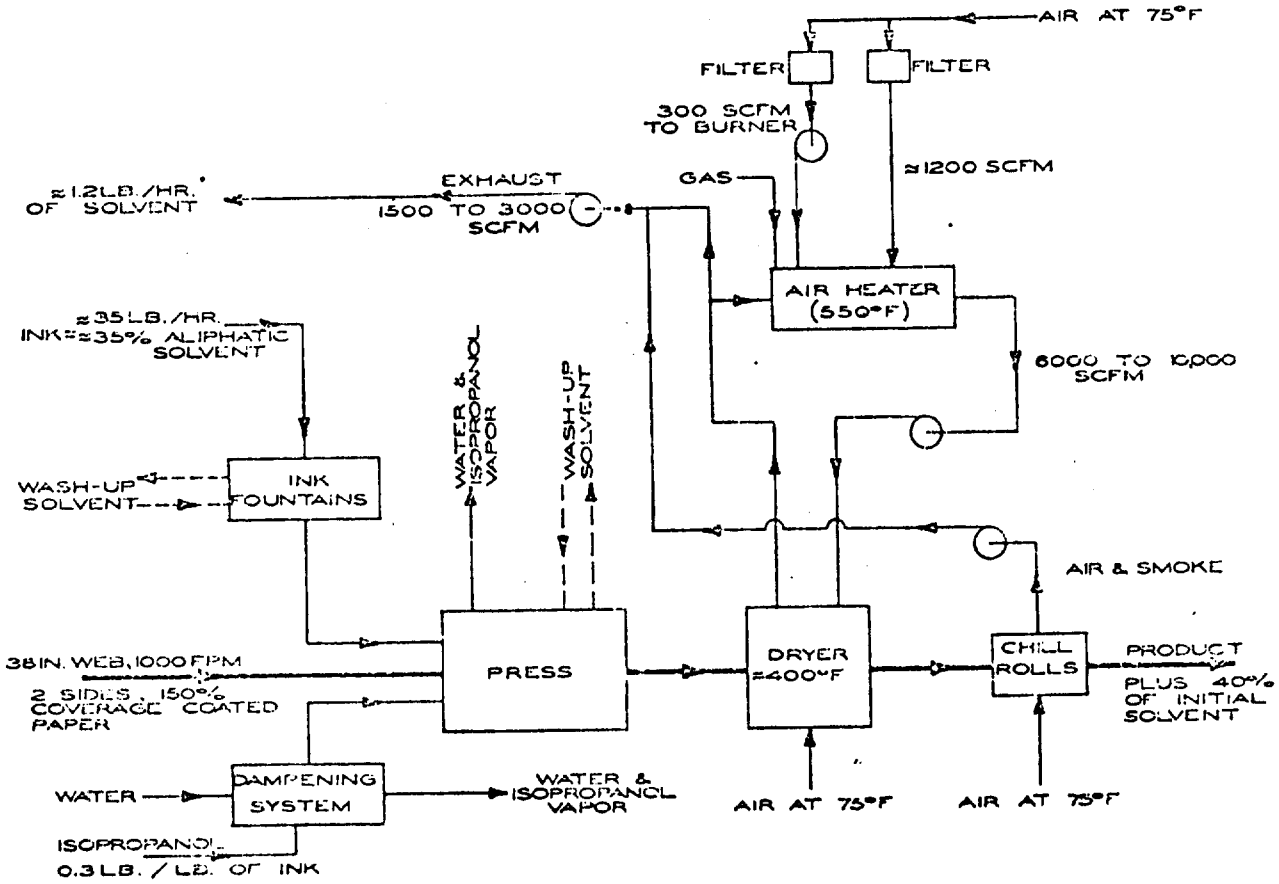

Figure IV-33: Web-Offset, Publication

A typical web-offset printing operation as depicted in Figure VI-33 operating under the conditions listed would have hydrocarbon emissions according to press speed as presented in Figure IV-34.(1)345

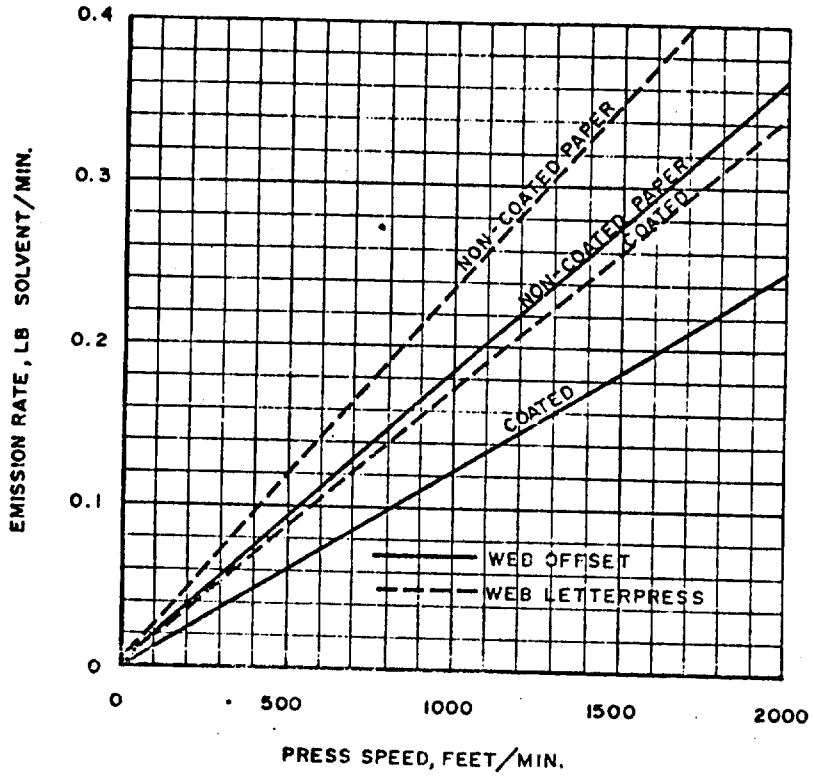

Figure IV-34: Emission Rates from Web Offset and Web Letterpress Employing Heatset Inks

The dryer may be either a hot air dryer where a minimum of flame impingement occurs or an all flame dryer where direct impingement of the flame on the web occurs. The composition of the dryer emissions depends on the type of dryer employed. In the hot air dryer, very little solvent decomposition occurs. As the amount of flame impingement increases, the quantity of solvent decomposition also increases.

D. Emission Rates:

The major points of hydrocarbon emissions from web-offset printing are:

1. press,
2. dryer,
3. drill rolls, and
4. ink fountains.

In web-offset printing, the ink and the coating on the paper are the major sources of hydrocarbons. Printing inks consist of three major components:

1. Pigments, which produce the desired colors, are composed of finely divided organic and inorganic materials.
2. Resins, which bind the pigments to the substrate, are composed of organic resins and polymers.
3. Solvents, which dissolve or disperse the resins and pigments, are usually composed of organic compounds. The solvent is removed from the ink and emitted to the atmosphere during the drying process.

The solvents used in ink dilution are classified into five general categories according to the chemical composition.[2]335

A. Benzene, toluene, xylene, ethylbenzene, unsaturates and mixtures with aromatic content greater than 25% by volume.
B. Normal and isoparaffins, cycloparaffins, mineral spirits containing less than 15% aromatics.
C. Methanol, ethanol, propanol, isopropanol, butanol, isobutanol, glycols, ester ketones.
D. Trichloroethylene, trichloroethane, methylene chloride.
E. Nitroparaffins and dimethyl formamide.
F. Miscellaneous.

Table IV-13[1]339 presents the volume breakdown in hundreds of gallons of solvent consumed for ink dilution by process and solvent type.

TABLE IV-13

VOLUME BREAKDOWN OF SOLVENT CONSUMED FOR INK DILUTION BY PRINTING PROCESS AND SOLVENT TYPE (1968)

PRINTING PROCESS	SOLVENT TYPE (HUNDRED GALLONS) A	B	C	D	E	F	TOTAL
Lithography	14,972	23,941	16,691	38	723	408	56,773
Letterpress	98	444	399	52	–	1	994
Flexography	58	606	10,180	–	1	170	11,015
Gravure	10,089	24,637	12,868	–	12	–	47,606
Screen Printing	34	173	85	–	–	145	437
Total	25,251	49,801	40,223	90	736	724	116,825

Table IV-13A presents the uncontrolled and controlled emissions in pounds/hour and kilograms/hour for the typical web-offset printing operations as depicted in Figure IV-34. The emissions listed are for a typical operation. These could vary even with the same equipment. The exact solvent structure of the ink, the percentage of the web that is covered with ink, the number of colors applied and dryers used, and press speed affect hydrocarbon emissions.

TABLE IV-13A

HYDROCARBON EMISSIONS FROM WEB-OFFSET PRINTING

Type of Operation & Control	% Control	Press Speed feet/min	Emissions	
			lbs/hr	kg/hr
Web-Offset Printing, Coated Paper, Uncontrolled	0	1500	.18	.082
Web-Offset Printing, Noncoated Paper, Uncontrolled	0	1500	.28	.13
Web-Offset Printing, Coated Paper with Thermal Combustion	90-99	1500	.018-.0018	.008-.0008
Web-Offset Printing, Noncoated Paper with Thermal Combustion	90-99	1500	.028-.0028	.013-.0013
Web-Offset Printing, Coated Paper with Catalytic Combustion	85-95	1500	.027-.009	.012-.004
Web-Offset Printing, Noncoated Paper with Catalytic Combustion	85-95	1500	.042-.014	.020-.006
Web-Offset Printing, Coated Paper with Adsorption	99	1500	.0018	.0008
Web-Offset Printing, Noncoated Paper with Adsorption	99	1500	.0028	.0013

E. Control Equipment:

Control of hydrocarbon emissions from web-offset and printing operations in general are categorized according to the following:

1. process modification,
2. ink modification, and
3. application of conventional control equipment.

1. Process Modification:

Modification of the drying process would decrease hydrocarbon emissions. Several methods of drying are being developed which could greatly reduce hydrocarbon emissions:

Microwave drying increases the temperature of the ink by application of electromagnetic energy. Since fuel is not directly consumed, the oven exhaust will not contain combustion products. However, solvent vapors would be emitted if conventional inks are used.

Infrared drying causes a free radical polymerization mechanism to occur which utilizes a nonvolatile monomer-based ink. The ink will not contain a volatile solvent, thus eliminating hydrocarbon emissions.

Electron beam drying utilizes electron induced polymerization. The procedure requires inks composed of monomers or prepolymers which will solidify when induced by the beam.

Ultraviolet drying utilizes light between 2400 to 3600 angstroms to activate monomer-based inks that polymerize rapidly. Hydrocarbons are eliminated, but the monomer-based inks are more expensive, the inks are not readily removed during paper reclamation, and ozone is produced in the process.

2. Ink Modification:

Aqueous inks are used in some flexographic operations. A disadvantage of an aqueous system is the relatively high latent heat of water. This limits press speeds when conventional dryers are employed. The application of microwave drying has enabled press speeds to increase.

Solventless inks are dried by thermally induced polymerization which appreciably reduces hydrocarbon emissions. The ink can be adapted to present equipment without modification. Since lower oven temperatures can be used, press speeds can be increased.

3. Conventional Air Pollution Control Equipment:

Exhaust gases from web-offset and printing operations in general are treated with conventional pollution control equipment. The three main types of processes utilized are:

a. thermal combustion,
b. catalytic combustion, and
c. adsorption.

Thermal combustion incinerates the hydrocarbon emissions from the collective web-offset vents in a gas or oil fired flame. The gases are preheated to 600°F to 900°F and incinerated at 1200°F to 1600°F. Fuel consumption is dependent upon the amount of heat exchange employed and the operating temperature. Thermal incinerators are capable of operating continuously at efficiencies of 90% to 99%. Figure IV-35[1]358 presents a flow diagram for thermal combustion.

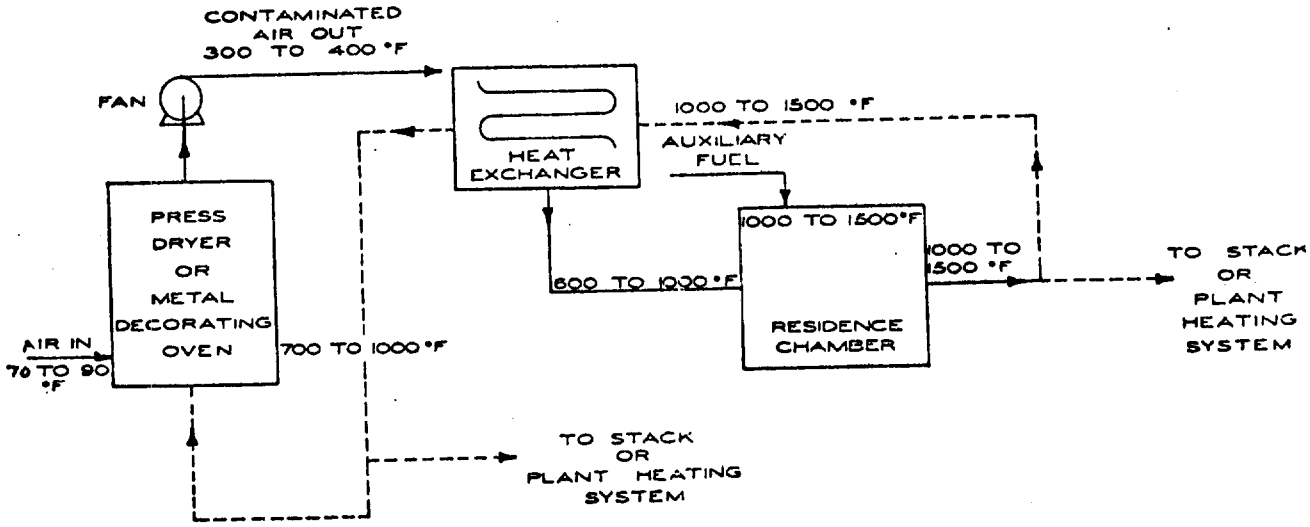

Figure IV-35: Flow Diagram for Thermal Combustion Including Possibilities for Heat Recovery

Catalytic combustion causes flameless oxidation of the undesired hydrocarbon from the web-offset exhaust. The oxidation occurs with a catalyst of a platinum group metal deposited on a ceramic base or metal ribbon. Figure IV-36[(1)359] is a schematic of a catalytic incinerator. Efficiencies range between 85% and 95% depending on the application.

Adsorption is the removal of hydrocarbons from a gas stream by means of an activated bed of carbon. When the adsorptive capacity of the bed is reached, the gas stream is diverted to an alternate bed. The original bed is regenerated with steam or hot air. If hydrocarbon solvent is not miscible in water, it can be recovered by decantation; otherwise, distillation is necessary. Figure IV-37[(1)360] presents a flow diagram for an adsorption process. A well-designed bed will absorb 15% of its own weight of solvent before regeneration is required. The efficiencies of a well-designed bed are 99%.

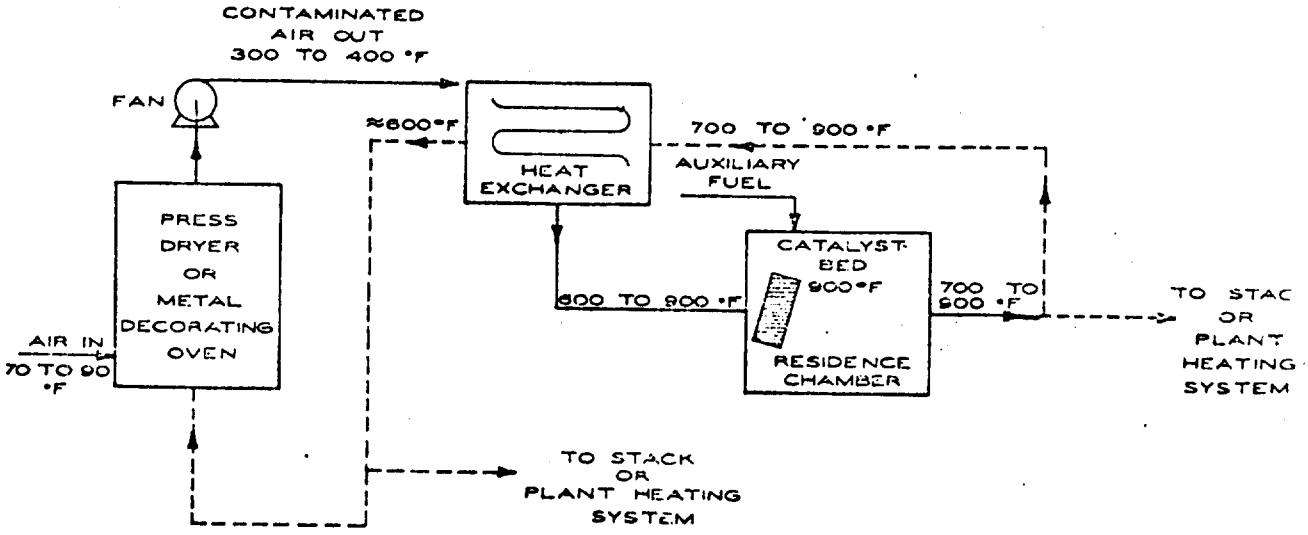

Figure IV-36: Flow Diagram for Catalytic Combustion Including Possibilities for Heat Recovery

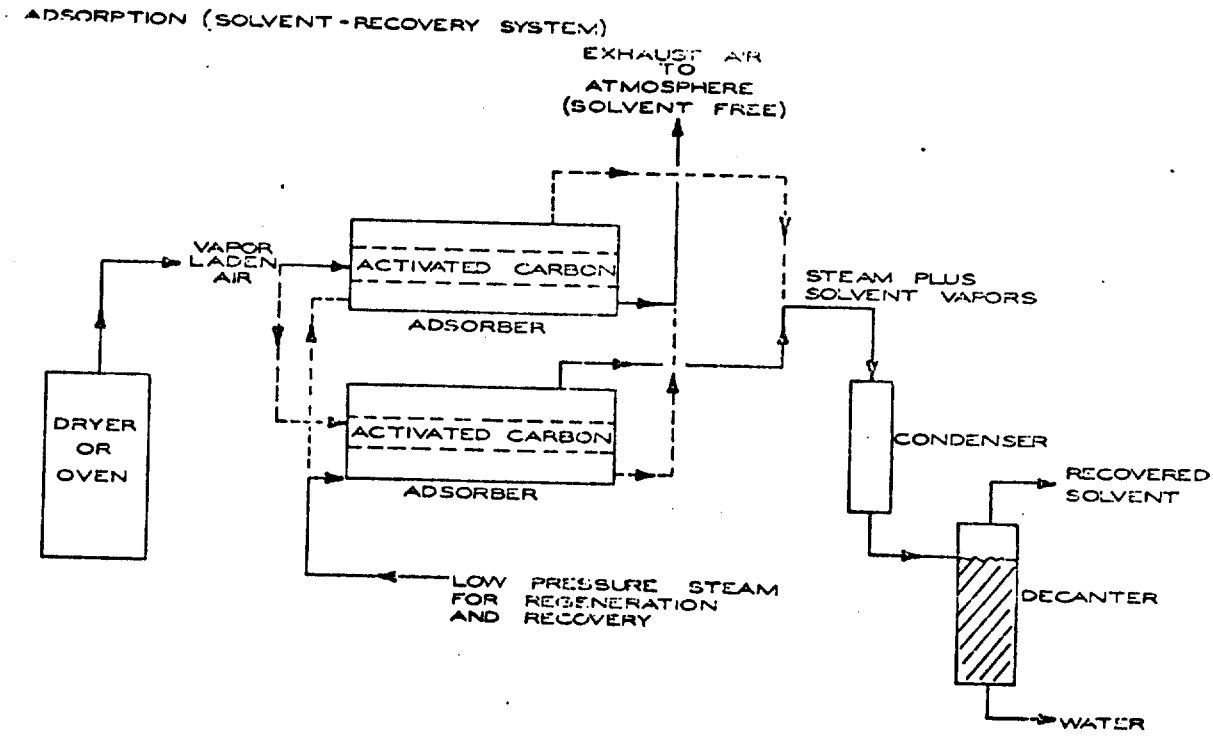

Figure IV-37: Flow Diagram of Adsorption Process

F. New Source Performance Standards and Regulation Limitations:

New Source Performance Standards (NSPS): No New Source Performance Standards have been promulgated for web-offset printing.

State Regulations for New and Existing Sources: Currently, hydrocarbon emission regulations are patterned after Los Angeles Rule 66 and Appendix B type legislation. Organic solvent useage is categorized by three basic process types. These are, (1) heating of articles by direct flame or baking with any organic solvent, (2) discharge into the atmosphere of photochemically reactive solvents by devices that employ or apply the solvent, (also includes air or heated drying of articles for the first twelve hours after removal from #1 type device) and (3) discharge into the atmosphere of non-photochemically reactive solvents. For the purposes of Rule 66, reactive solvents are defined as solvents of more than 20% by volume of the following:

1. A combination of hydrocarbons, alcohols, aldehydes, esters, ethers or ketones having an olefinic or cyclo-olefinic type of unsaturation: 5 per cent
2. A combination of aromatic compounds with eight or more carbon atoms to the molecule except ethylbenzene: 8 per cent
3. A combination of ethylbenzene, ketones having branched hydrocarbon structures, trichloroethylene or toluene: 20 per cent

Rule 66 limits emissions of hydrocarbons according to the three process types. These limitations are as follows:

Process	lbs/day &	lbs/hour
1. heated process	15	3
2. unheated photochemically reactive	40	8
3. non-photochemically reactive	3000	450

Appendix B (Federal Register, Vol. 36, No. 158 - Saturday, August 14, 1971) limits the emission of photchemically reactive hydrocarbons to 15 lbs/day and 3 lbs/hr. Reactive solvents can be exempted from the regulation if the solvent is less than 20% of the total volume of a water based solvent. Solvents which have shown to be virtually unreactive are, saturated halogenated hydrocarbons, perchloroethylene, benzene, acetone and c_1-c_5n-paraffins.

For both Appendix B and Rule 66 type legislation if 85% control has been demonstrated the regulation has been met by the source even if the lbs/day and lbs/hr values have been exceeded. Most states have regulations that limit the emissions from handling and use of organic solvents. Alabama, Connecticut and Ohio have regulations patterned after Los Angeles Rule 66. Indiana and Louisiana have regulations patterned after Appendix B. Some states such as North Carolina have an organic solvent regulation which is patterned after both types of regulations.

Table IV-14 presents the uncontrolled and controlled emissions and limitations from Web-Offset printing operations.

TABLE IV-14

HYDROCARBON EMISSIONS AND LIMITATIONS FROM WEB-OFFSET PRINTING

Type of Operation & Control	% Control	Emissions		Limitations	
		lbs/hr	kg/hr	lbs/hr	kg/hr
Web-Offset Printing, Coated Paper, Uncontrolled	0	.18	.082	3	1.4
Web-Offset Printing, Noncoated Paper, Uncontrolled	0	.28	.13	3	1.4
Web-Offset Printing, Coated Paper with Thermal Combustion	90-99	.018-.0018	.008-.0008	3	1.4
Web-Offset Printing, Noncoated Paper with Thermal Combustion	90-99	.028-.0028	.013-.0013	3	1.4
Web-Offset Printing, Coated Paper with Catalytic Combustion	85-95	.027-.009	.012-.004	3	1.4
Web-Offset Printing, Noncoated Paper with Catalytic Combustion	85-95	.042-.014	.020-.006	3	1.4
Web-Offset Printing, Coated Paper with Adsorption	99	.0018	.0008	3	1.4
Web-Offset Printing, Noncoated Paper with Adsorption	99	.0028	.0013	3	1.4

Potential Source Compliance and Emission Limitations: Hydrocarbon emission limitations are not based on process weight rate. Web-Offset Printing for the conditions outlined in Section D would meet the 3 lbs/hr limitation uncontrolled. A number of presses and dryers can be manifolded together where it would be necessary to utilize some type of control equipment.

The Environment Reporter was used to update the emission limitations.

G. References:

The literature used to develop the information on web-offset printing is as follows:

1. Air Pollution Control Technology and Costs in Seven Selected Areas, Industrial Gas Cleaning Institute, EPA Contract No. 68-02-0289, December 1973.

2. Background Information for Stationary Source Categories, Provided by EPA, Joseph J. Sableski, Chief, Industrial Survey Section, Industrial Studies Branch, November 3, 1972.

3. Priorization of Air Pollution From Industrial Surface Coating Operations, Monsanto Research Corporation, Contract No. 68-02-0320, February 1975.

The following references were consulted but not used to directly develop the information on web-offset printing.

4. Evaluations of Emissions and Control Technologies in the Graphic Arts Industries, Phase II: Web-Offset and Metal Decorating Processes, R. R. Gadomski, A. V. Gimbrone, Mary P. David, and W. J. Green, Contract No. 68-02-0001, May 1973.

5. Organic Compound Emission Sources, Emission Control Techniques and Emission Limitation Guidelines, EPA, June 1974.

6. Hydrocarbon Pollutant System Study, Volume I - Stationary Sources, Effects, and Control, October 20, 1972, MSA Research Corporation.

A. Source Category: IV Evaporation Losses

B. Sub Category: Graphic Arts (Flexography)

C. Source Description:

Flexographic printing is similar to letterpress, where the image area is raised above the surface of the plate. Ink is transferred directly to the image area of the plate and directly from the plate to the paper or substrate. Whenever the plate is made of rubber and alcohol based inks are used, the process is flexography. The process is always web fed and is used for medium or long runs on a variety of substrates, including heavy paper, fiberboard, metal, and plastic foil.

Flexographic processes differ among themselves mainly in the type of ink used. Most flexographic inks are fluid in consistency and contain about 55% organic solvent. The solvent may be alcohol or alcohol mixed with aliphatic hydrocarbons or esters.(2)4

Flexography printing uses two similar but different processes. The composition of the ink and the inclusion of drying are the main areas where the processes differ. The two types of flexographic printing are:

1. flexographic, publication and
2. flexographic, newspaper.

1. Flexographic, publication uses a paper web that is printed on one side at a time, and the web is dried after each color is printed. When four colors are printed, a procedure called "double ending" is employed. The web passes through one press and one dryer, is turned over, and returns to the same press where it was adjacent to the first pass on the same cylinder. In this manner, only four presses and four dryers are required for four-color, two-sided printing. The dryer may be either a hot air dryer where a minimum of flame impingement occurs, or an all-flame dryer where direct impingement of the flame on the web occurs. The composition of the dryer emissions depends on the type of dryer employed. In the hot air dryer, very little solvent decomposition occurs. As the amount of flame impingement increases, the quantity of solvent decomposition also increases.

   The exhaust and solvent emission rates for flexography would be similar to letterpress, and a schematic of a typical letterpress operation is presented in Figure IV-38.(1)346 The exhaust and solvent emission rates represent one-color, two-sided printing. In a four-color operation, four dryers would be manifolded together to a common stack. The amount and composition of the hydrocarbon emissions depend on the ink composition and the type of dryer.(1)347

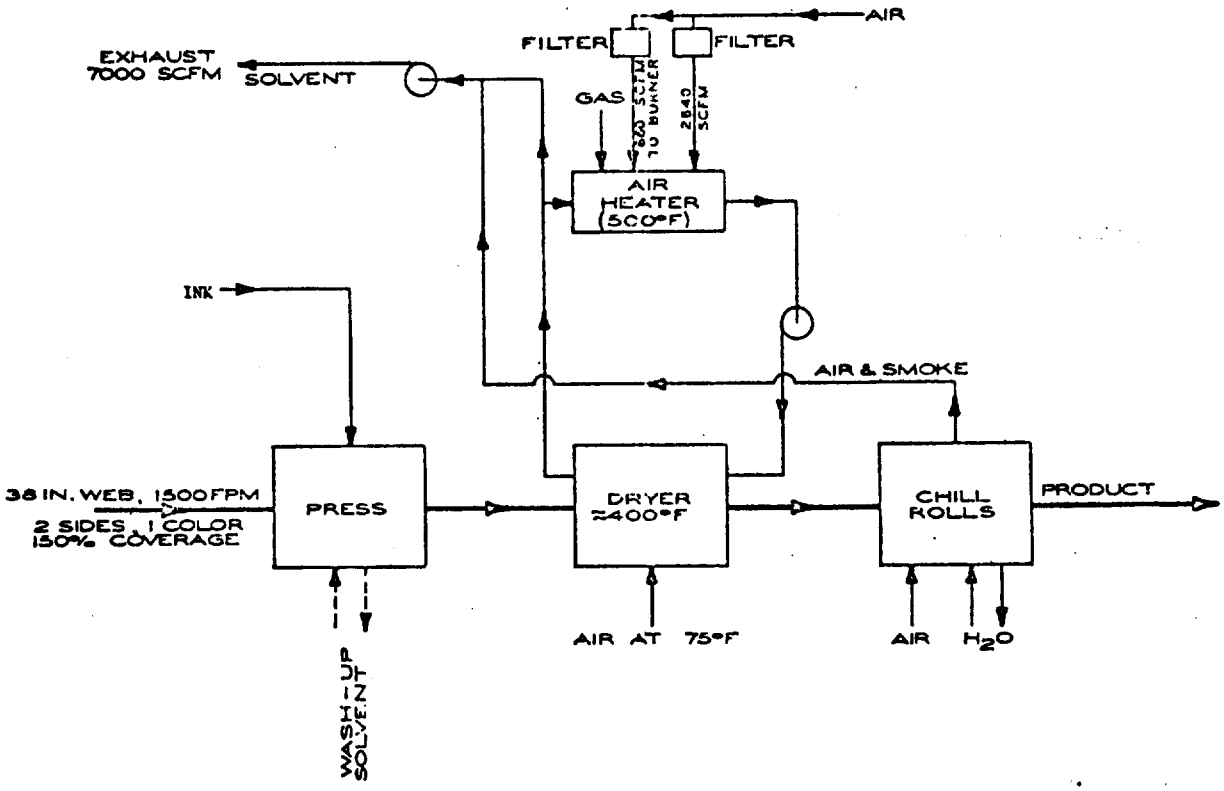

Figure IV-38: Flexographic, Publication Process

2. Flexography, newspaper operations use oxidative drying inks which contain little or no solvent. The exhaust gases from these operations are not a source of hydrocarbon emissions. The only substances emitted from these operations are ink mist and paper dust. Figure IV-39[1]346 presents a schematic of flexographic, newspaper printing process.

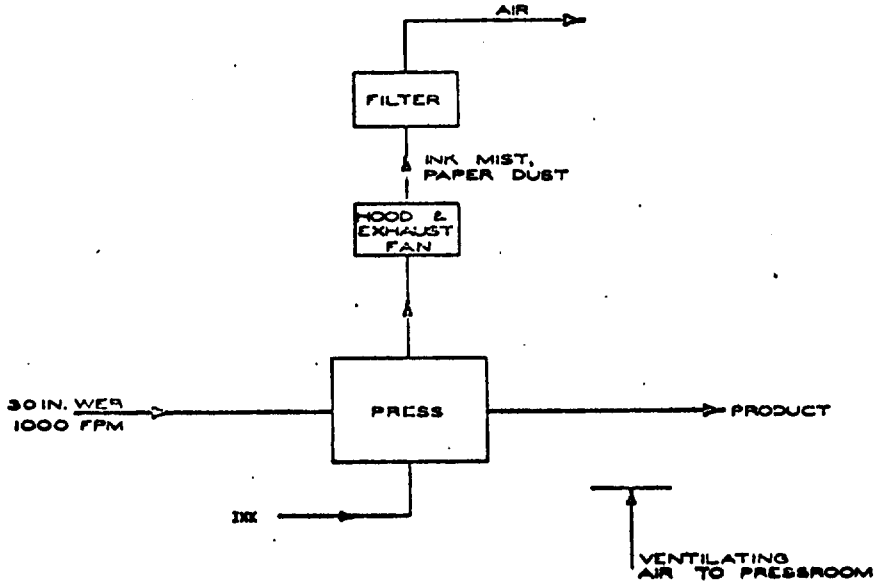

Figure IV-39: Flexographic, Newspaper Process

D. Emission Rates:

The major points of hydrocarbon emissions from flexographic printing are:

1. hot air dryer,
2. press unit, and
3. chill rolls.

In flexography and printing operations in general, the ink is the major source of hydrocarbons. Printing inks consist of three major components:

1. Pigments, which produce the desired colors, are composed of finely divided organic and inorganic materials.
2. Resins, which bind the pigments to the substrate, are composed of organic resins and polymers.
3. Solvents, which dissolve or disperse the resins and pigments, are usually composed of organic compounds. The solvent is removed from the ink and emitted to the atmosphere during the drying process.

The solvents used in ink dilution are classified into five general categories according to the chemical composition.(2)335

A. Benzene, toluene, xylene, ethylbenzene, unsaturates, and mixtures with aromatic content greater than 25% by volume.
B. Normal and isoparaffins, cycloparaffins, mineral spirits containing less than 15% aromatics.
C. Methanol, ethanol, propanol, isopropanol, butanol, isobutanol, glycols, esters, ketones.
D. Trichloroethylene, trichloroethane, methylene chloride.
E. Nitroparaffins and dimethyl formamide.
F. Miscellaneous.

Table IV-15 presents the volume breakdown in hundreds of gallons of solvent consumed for ink dilution by process and solvent type.(2)338

TABLE IV-15

VOLUME BREAKDOWN OF SOLVENT CONSUMED FOR INK DILUTION BY PRINTING PROCESS AND SOLVENT TYPE (1969)

PRINTING PROCESS	SOLVENT TYPE (HUNDRED GALLONS) A	B	C	D	E	F	TOTAL
Lithography	14,972	23,941	16,091	38	723	408	56,773
Letterpress	95	444	399	52	–	1	994
Flexography	58	605	10,130	–	1	170	11,015
Gravure	10,039	24,637	12,863	–	12	–	47,606
Screen Printing	34	173	86	–	–	145	437
Total	25,251	49,801	40,223	90	736	724	116,825

A typical flexographic printing operation as depicted in Figure IV-38 would have hydrocarbon emissions similar to a letterpress operation according to press speed as presented in Figure IV-40.

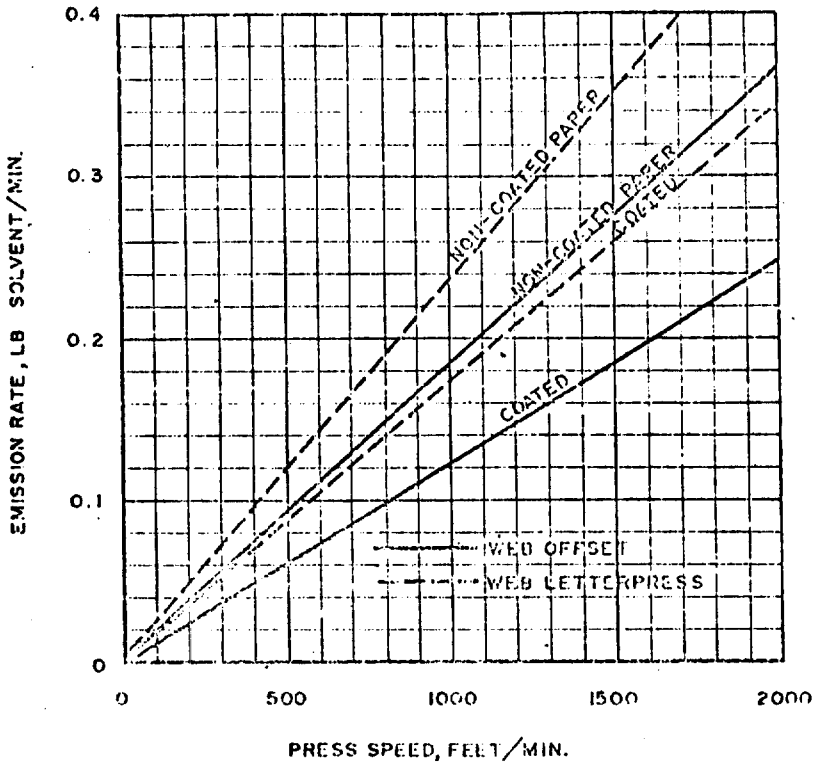

Figure IV-40: Emission Rates from Web Offset and Web Letterpress Employing Heatset Inks

Table IV-15A presents the uncontrolled and controlled emissions in pounds/hour and kilograms/hour for the typical flexographic printing operations as depicted in Figure IV-38. The emissions listed are for a typical operation. These could vary even with the same equipment. The exact solvent structure of the ink, the percentage of the web that is covered with ink, the number of colors applied and dryers used, and press speed affect the hydrocarbon emissions.

E. Control Equipment:

Control of hydrocarbon emissions from flexographic and printing operations in general are categorized according to the following:(2)354

1. process modification,
2. ink modification, and
3. conventional air pollution control equipment

TABLE IV-15A

HYDROCARBON EMISSIONS FROM FLEXOGRAPHIC PUBLICATION PRINTING

Type of Operation & Control	% Control	Press Speed ft/min	Emissions lbs/hr	Emissions kg/hr
Flexographic Printing, Coated Paper, Uncontrolled	0	1500	.26	.12
Flexographic Printing, Noncoated Paper, Uncontrolled	0	1500	.35	.16
Flexographic Printing, Coated Paper with Thermal Combustion	90-99	1500	.026-.0026	.012-.0012
Flexographic Printing, Noncoated Paper with Thermal Combustion	90-99	1500	.035-.0035	.016-.0016
Flexographic Printing, Coated Paper with Catalytic Combustion	85-95	1500	.039-.013	.018-.006
Flexographic Printing, Noncoated Paper with Catalytic Combustion	85-95	1500	.053-.018	.024-.006
Flexographic Printing, Coated Paper with Adsorption	99	1500	.0026	.0012
Flexographic Printing, Noncoated Paper with Adsorption	99	1500	.0035	.0016

1. Process Modification:

Modification of the drying process would decrease hydrocarbon emissions. Several methods of drying are being developed which could greatly reduce hydrocarbon emissions:

Microwave drying increases the temperature of the ink by application of electromagnetic energy. Since fuel is not directly consumed, the oven exhaust will not contain combustion products. However, solvent vapors would be emitted if conventional inks are used.

Infrared drying causes a free radical polymerization mechanism to occur which utilizes a nonvolatile monomer-based ink. The ink will not contain a volatile solvent, thus eliminating hydrocarbon emissions.

Electron beam drying utilizes electron induced polymerization. The procedure requires inks composed of monomers or prepolymers which will solidify when induced by the beam.

Ultraviolet drying utilizes light between 2400 to 3600 angstroms to activate monomer-based inks that polymerize rapidly. Hydrocarbons are eliminated, but the monomer-based inks are more expensive, the inks are not readily removed during paper reclamation, and ozone is produced in the process.

2. Ink Modification:

Aqueous inks are used in some flexographic operations. A disadvantage of an aqueous system is the relatively high latent heat of water. This limits press speeds when conventional dryers are employed. The application of microwave drying has enabled press speeds to increase.

Solventless inks are dried by thermally induced polymerization which appreciably reduces hydrocarbon emissions. The ink can be adapted to present equipment without modification. Since lower oven temperatures can be used, press speeds can be increased.

3. Conventional Air Pollution Control Equipment:

Exhaust gases from flexographic and printing operations in general are treated with conventional pollution control equipment. The three main types of processes utilized are:

a. thermal combusion,
b. catalytic combustion, and
c. adsorption.

Thermal combustion incinerates the hydrocarbon emissions from the collective flexographic vents in a gas or oil fired flame. The gases are preheated to 600°F to 900°F and incinerated at 1200°F to 1600°F. Fuel consumption is dependent upon the amount of heat exchange employed and the operating temperature. Thermal incinerators are capable of operating continuously at efficiencies of 90% to 99%. Figure IV-41(1)358 presents a flow diagram for thermal combustion.

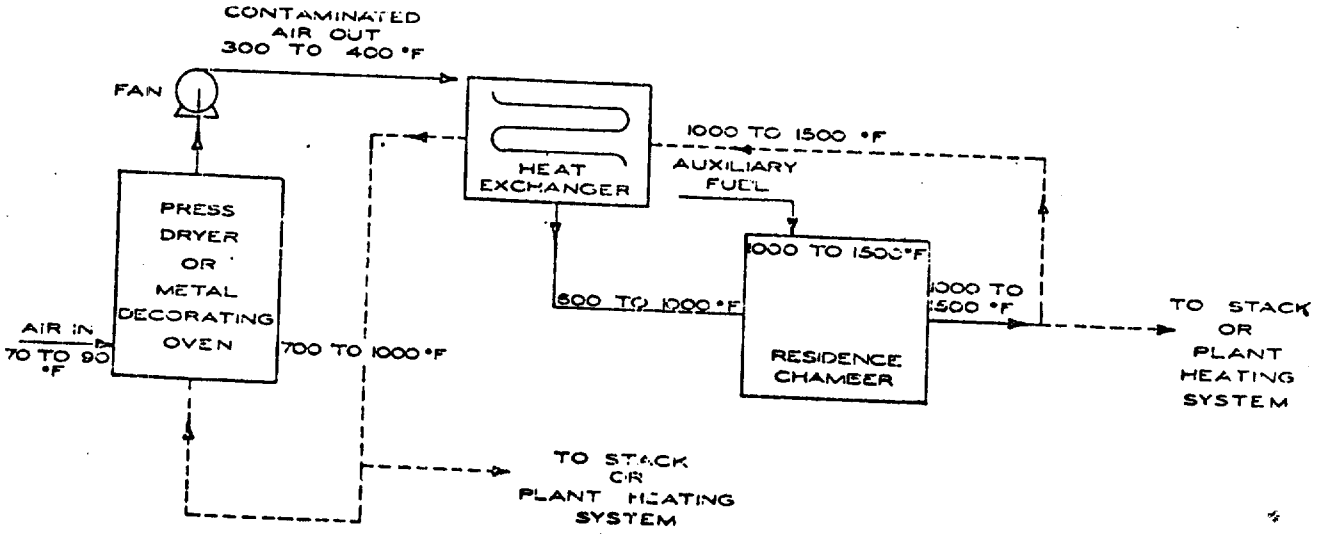

Figure IV-41: Flow Diagram for Thermal Combustion Including Possibilities for Heat Recovery

Catalytic combustion causes flameless oxidation of the undesired hydrocarbon from the flexographic exhaust. The oxidation occurs with a catalyst of a platinum group metal deposited on a ceramic base or metal ribbon. Figure IV-42(1)359 is a schematic of a catalytic incinerator. Efficiencies range between 85% and 95% depending on the application.

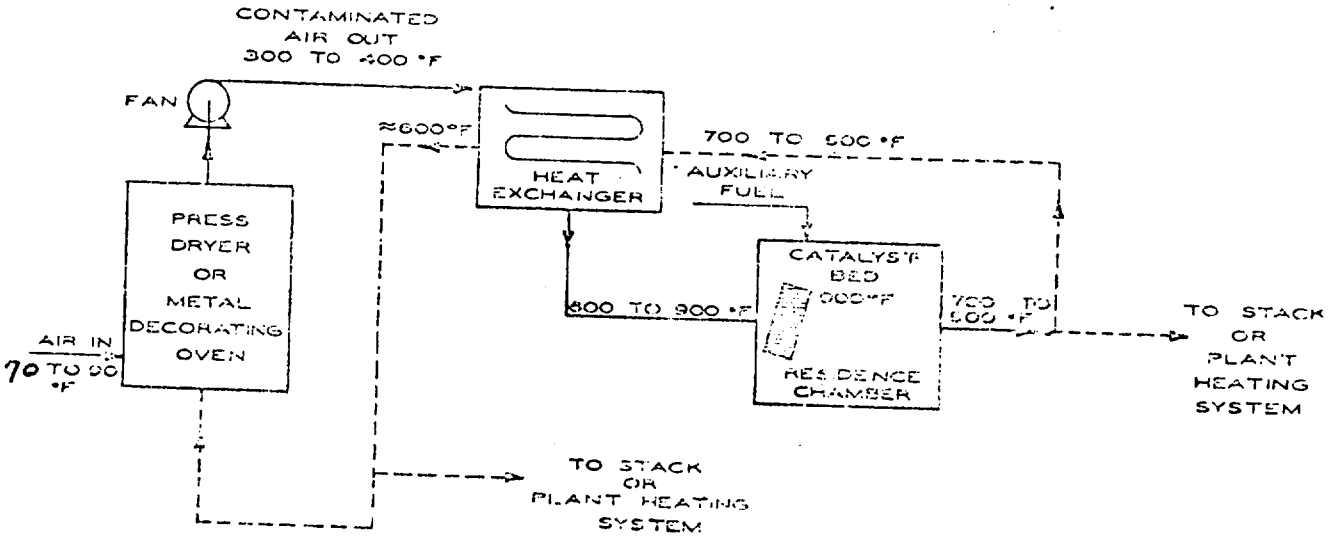

Figure IV-42: Flow Diagram for Catalytic Combustion Including Possiblities for Heat Recovery

Adsorption is the removal of hydrocarbons from a gas stream by means of an activated bed of carbon. When the adsorptive capacity of the bed is reached, the gas stream is diverted to an alternate bed. The original bed is regenerated with steam or hot air. If hydrocarbon solvent is not miscible in water, it can be recovered by decantation; otherwise, distillation is necessary. Figure IV-43(1)360 presents a flow diagram for an adsorption process. A well-designed bed will absorb 15% of its own weight of solvent before regeneration is required. The efficiencies of a well-designed bed are 99%.

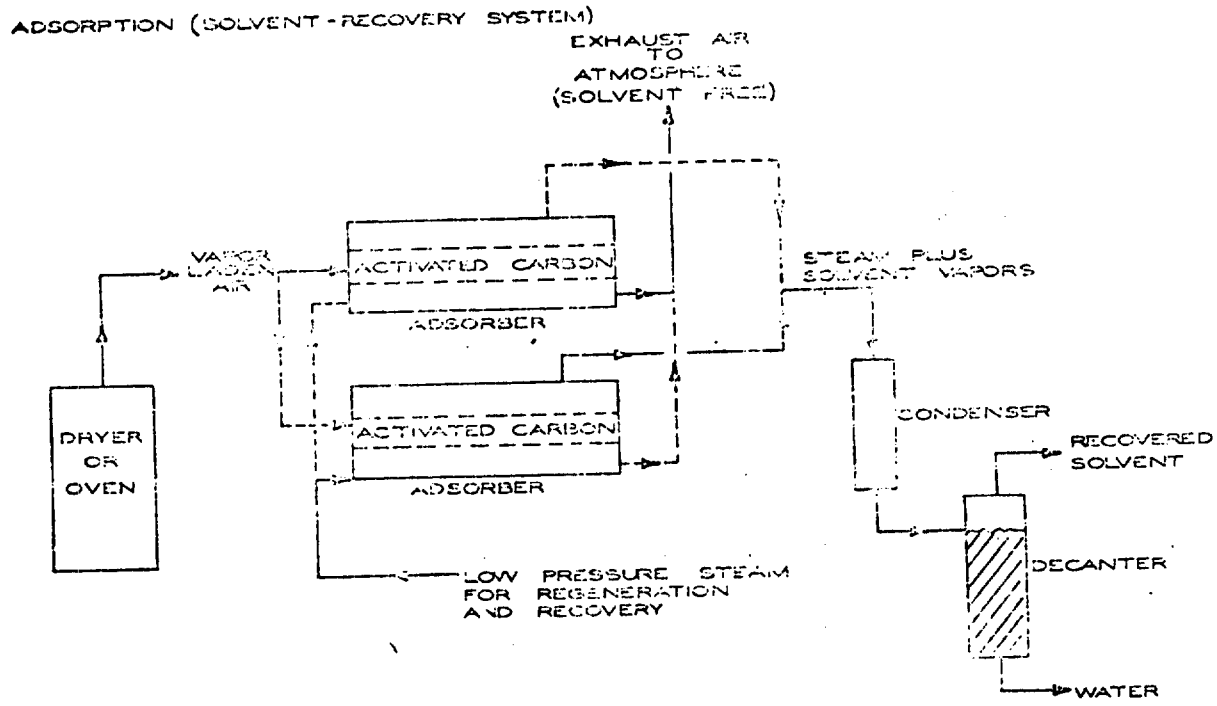

Figure IV-43: Flow Diagram of Adsorption Process

F. New Source Performance Standards and Regulation Limitations:

New Source Performance Standards (NSPS): No New Source Performance Standards have been promulgated for flexographic printing.

State Regulations for New and Existing Sources: Currently, hydrocarbon emission regulations are patterned after Los Angeles Rule 66 and Appendix B type legislation. Organic solvent useage is categorized by three basic process types. These are, (1) heating of articles by direct flame or baking with any organic solvent, (2) discharge into the atmosphere of photochemically reactive solvents by devices that employ or apply the solvent, (also includes air or heated drying of articles for the first twelve hours after removal from #1 type device) and (3) discharge into the atmosphere of non-photochemically reactive solvents. For the purposes of Rule 66, reactive solvents are defined as solvents of more than 20% by volume of the following:

1. A combination of hydrocarbons, alcohols, aldehydes, esters, ethers or ketones having an olefinic or cyclo-olefinic type of unsaturation: 5 per cent
2. A combination of aromatic compounds with eight or more carbon atoms to the molecule except ethylbenzene: 8 per cent
3. A combination of ethylbenzene, ketones having branched hydrocarbon structures, trichloroethylene or toluene: 20 per cent

Rule 66 limits emissions of hydrocarbons according to the three process types. These limitations are as follows:

Process	lbs/day &	lbs/hour
1. heated process	15	3
2. unheated photochemically reactive	40	8
3. non-photochemically reactive	3000	450

Appendix B (Federal Register, Vol. 36, No. 158 - Saturday, August 14, 1971) limits the emission of photchemically reactive hydrocarbons to 15 lbs/day and 3 lbs/hr. Reactive solvents can be exempted from the regulation if the solvent is less than 20% of the total volume of a water based solvent. Solvents which have shown to be virtually unreactive are, saturated halogenated hydrocarbons, perchloroethylene, benzene, acetone and c_1-c_5n-paraffins.

For both Appendix B and Rule 66 type legislation if 85% control has been demonstrated the regulation has been met by the source even if the lbs/day and lbs/hr values have been exceeded. Most states have regulations that limit the emissions from handling and use of organic solvents. Alabama, Connecticut and Ohio have regulations patterned after Los Angeles Rule 66. Indiana and Louisiana have regulations patterned after Appendix B. Some states such as North Carolina have an organic solvent regulation which is patterned after both types of regulations.

Table IV-16 presents the uncontrolled and controlled emissions and limitations from flexographic printing operations.

TABLE IV-16

HYDROCARBON EMISSIONS AND LIMITATIONS FROM FLEXOGRAPHIC PRINTING

Type of Operation & Control	% Control	Emissions		Limitations	
		lbs/hr	kg/hr	lbs/hr	kg/hr
Flexographic Printing, Coated Paper, Uncontrolled	0	.26	.12	3	1.4
Flexographic Printing, Noncoated Paper, Uncontrolled	0	.35	.16	3	1.4
Flexographic Printing, Coated Paper with Thermal Combustion	90-99	.026-.0026	.012-.0012	3	1.4
Flexographic Printing, Noncoated Paper with Thermal Combustion	90-99	.035-.0035	.016-.0016	3	1.4
Flexographic Printing, Coated Paper with Catalytic Combustion	85-95	.039-.013	.018-.006	3	1.4
Flexographic Printing, Noncoated Paper with Catalytic Combustion	85-95	.053-.018	.024-.008	3	1.4
Flexographic Printing, Coated Paper with Adsorption	99	.0026	.0012	3	1.4
Flexographic Printing, Noncoated Paper with Adsorption	99	.0035	.0016	3	1.4

Potential Source Compliance and Emission Limitations: Hydrocarbon emissions limitations are not based on process weight. Letterpress printing operations as outlined in Section D, even uncontrolled, will not violate the 3 lb/hr limitation. However, it is conceivable to have a number of presses and dryers manifolded together where control would be necessary to meet the 3 lbs/hr limitation.

The Environment Reporter was used to update the emission limitations.

G. References:

The literature used to develop the information on flexographic printing is as follows:

1. Air Pollution Control Technology and Costs in Seven Selected Areas, Industrial Gas Cleaning Institute, EPA, Contract No. 68-02-0289, December 1973.

2. Background Information for Stationary Source Categories, Provided by EPA, Joseph J. Sableski, Chief, Industrial Survey Section, Industrial Studies Branch, November 3, 1972.

3. Priorization of Air Pollution From Industrial Surface Coating Operations, Monsanto Research Corporation, Contract No. 68-02-0320, February 1975.

The following references were consulted but not used to directly develop the information on flexographic printing.

4. Evaluations of Emissions and Control Technologies in the Graphic Arts Industries, Phase II: Web-Offset and Metal Decorating Processes, R. R. Gadomski, A. V. Gimbrone, Mary P. David, and W. J. Green, Contract No. 68-02-0001, May 1973.

5. Organic Compound Emission Sources, Emission Control Techniques and Emission Limitation Guidelines, EPA, June 1974.

6. Hydrocarbon Pollutant System Study, Volume I - Stationary Sources, Effects, and Control, October 20, 1972, MSA Research Corporation.

A. Source Category: IV Evaporation Losses

B. Sub Category: Industrial Surface Coating

C. Source Description:

Industrial surface coating operations, excluding those for automobile and architectural painting, are utilized in the coating of sheet, strip, coil, paper and paperboard, in treating fabrics, and in finishing appliances, machinery and furniture. These coating operations produce hydrocarbon emissions, primarily solvents and resins, and particulate emissions.(1)1

Industrial surface coating operations emit 1.3×10^9 kg/year for the following:

1. major appliance finishing,
2. small appliance finishing,
3. farm machinery finishing,
4. industrial machinery finishing,
5. commercial machinery finishing,
6. wood furniture finishing,
7. sheet, strip and coil coating,
8. metal furniture finishing,
9. paper and paperboard coating, and
10. fabric treatment.

Sheet, strip and coil coating, paper and paperboard coating, and fabric treatment account for 95% of all emissions considered in this section.(1)4 Figure IV-44 summarizes the emission rates from industrial surface coating. The hydrocarbon species emitted from industrial surface coating operations include solvents and resins. The solvent species include alcohols, esters, glycol ethers, ketones, hydrocarbons, halogenated hydrocarbons, and nitroparaffins. Table IV-17(1)7 summarizes the individual hydrocarbons for each of the above categories.

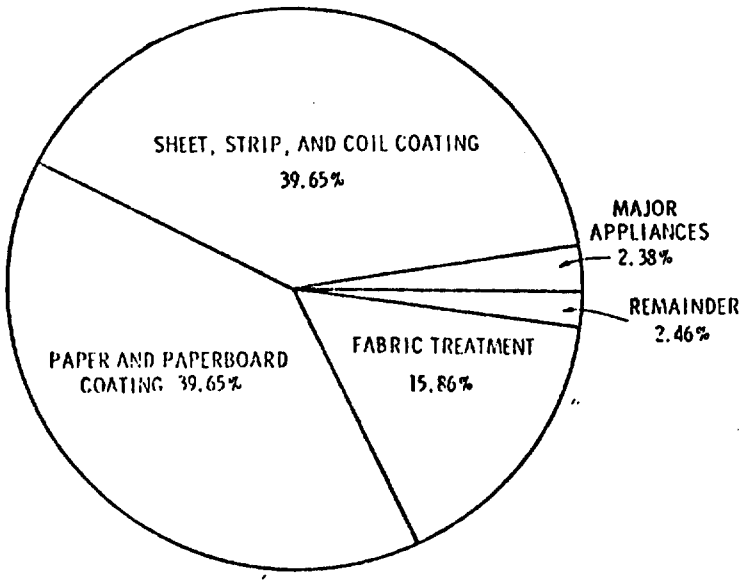

Figure IV-44: Summary of Emission Rates from Industrial Services Coating Operations

TABLE IV-17

SOLVENT SPECIES IN EMITTED HYDROCARBONS

Alcohols	Esters	Glycol ethers
Methyl alcohol	Ethyl acetate	Ethylene glycol monomethyl ether
Ethyl alcohol	Isopropyl acetate	Ethylene glycol monoethyl ether
Isopropyl alcohol	n-Butyl acetate	Ethylene glycol monobutyl ether
n-Propyl alcohol	sec-Butyl acetate	Diethylene glycol monoethyl ether
n-Butyl alcohol	Amyl acetate	Diethylene glycol monomethyl ether
sec-Butyl alcohol	Methyl amyl acetate	Diethylene glycol monobutyl ether
Isobutyl alcohol	Ethylene glycol monoethyl ether acetate	
Methyl isobutyl carbinol	Ethylene glycol monobutyl ether acetate	

Ketones	Hydrocarbons	Halogenated hydrocarbons
Acetone	Aliphatic:	Carbon tetrachloride
Methyl ethyl ketone	Hexane	Trichloroethylene
Methyl isobutyl ketone	Heptane	Perchloroethylene
Methyl isoamyl ketone	VM&P naphtha (typical)	
Diisobutyl ketone	Mineral spirits (typical)	Nitroparaffins
Cyclohexanone	Aromatic:	Nitroethane
Diacetone alcohol	Benzene	Nitropropane
Isophorone	Toluene	sec-Nitropropane
	Xylene (mixed)	
	High flash aromatic naphtha (typical)	

There are a number of different surface coating formulations. The Paints and Allied Products industry contains 24 general formulations, and these are presented in Table IV-17A.[1]77 In determining the emission factors for each type, the surface coating formulations used for that product were weighted according to the amount of paint consumed by that product.

Surface coating operations consist of three basic operations as depicted in Figure IV-45:

1. degreasing,
2. surface coating, and
3. drying and curing.

In Figure IV-45, streams 1, 2, 3, and 4 represent the flow of products through the plant. Stream 1 represents the input of uncoated products to the surface coating system. For sheet strip, coil coating, and fabric treatment, the product is degreased using halogenated hydrocarbons. Paper and paperboard are not degreased prior to surface coating since these are not lubricated for machining and handling purposes.

TABLE IV-17A

EXAMPLES OF SURFACE COATING AND ADDED THINNER FORMULAS ON AN AS-PURCHASED BASIS HAVING CONFORMING SOLVENT SYSTEMS

			Composition of surface coatings, % vol					
			Volatile portion					
Type of surface coating	Weight, kg/l	Nonvolatile portion	Aliphatic saturated	Aromatic	Alcohols saturated	Ketones	Esters saturated	Ethers saturated
Enamel, air dry	0.9	39.6	93.5	6.5				
Enamel, baking	1.1	42.8	82.1	11.7	6.2			
Enamel, dipping	1.2	59.0	58.2	7.2	30.9		3.7	
Acrylic enamel	1.1	30.3		6.9		80.6	12.5	
Alkyd enamel	1.0	47.2	92.5	7.5				
Primer surface	1.1	49.0	18.0	8.9	21.8	16.5	16.8	18.0
Primer, epoxy	1.3	57.2	44.8	15.9	3.0		28.8	7.5
Primer, zinc chromate	1.2	37.8	80.0	7.2	12.8			
Primer, vinyl zinc chromate	1.0	34.0	17.5	7.9		60.0		14.6
Epoxy-polyamide	1.3	34.7		19.9	26.4	34.5	19.2	
Varnish, baking	0.8	35.3				97.0		3.0
Lacquer, spraying	0.9	26.1	7.0	1.7	21.3	23.2	45.1	1.7
Lacquer, hot spray	1.0	16.5	16.4	6.8	24.3	17.2	14.8	20.5
Lacquer, acrylic	1.0	38.2	10.0	18.5	3.5	42.0	26.0	
Vinyl, roller coat	0.9	12.				43.5		56.5
Vinyl	1.1	22.00		18.9		81.1		
Vinyl acrylic	0.9	15.2				84.9	15.1	
Polyurethane	1.1	31.7		19.7		13.9	66.4	
Stain	0.9	2.6	80.6	14.0		0.1		5.3
Glaze	0.9	40.9	91.6	8.4				
Wash Coat	0.9	12.4	40.6	14.7	10.8	13.7	15.7	4.5
Sealer	0.8	11.7	41.2	7.0	14.7	19.1	18.0	
Toluene replacement thinner	0.8		55.5	17.5 (Toluene)			9.0	18.0
Xylene replacement thinner	0.8		55.5	7.5	24.0		12.0	

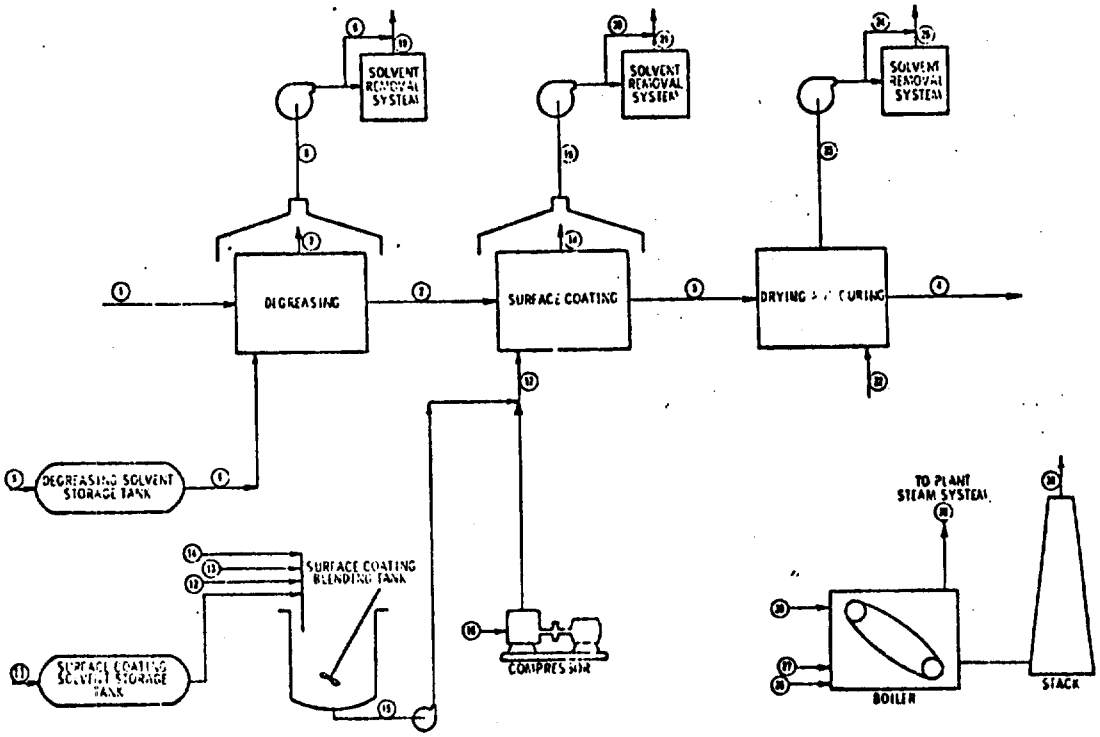

Figure IV-45: Flow Diagram of a Surface Coating Operation

Stream 2 represents the flow of degreased or scoured products to the surface coating operation. The type of surface coating operation used depends upon the product-type coated, coating requirements, and the method of application.

Stream 3 represents the product flow to the drying and curing operation. Drying and curing methods for three coating operations, and the drying technique used are as follows:

Product-Type Category	Drying and Curing Methods
Sheet, Strip and Coil Coating	Bake Ovens
Paper and Paperboard Coating	Direct Contact Drying; Evaporative Drying
Fabric Treatment	Direct Contact Drying

Stream 4 represents the flow of coated finished products from the surface coating section of a manufacturing plant.

Stream 5 through 10 represent the flow of degreasing solvent through the surface coating section of a manufacturing plant. Streams 5 and 6 depict the flow of solvent into the plant, and the degreasing unit, respectively. Streams 7 and 8 represent the flow of solvent vapors from the degreasing unit through the fume handling system. Uncontrolled and controlled emissions are represented by streams 9 and 10, respectively.

Streams 11 through 21 represent the flow of surface coating raw materials through the plant. Streams 11, 12, 13, and 14 represent the flow of solvent, pigment, resin and additives to the surface coating blending tank. Stream 15 is the flow of coating to the surface coating unit. For those operations that use spray painting, stream 16 is the flow of compressed air. Streams 18 and 19 represent the flow of solvents and resins from the surface coating unit through the fume handling equipment. Uncontrolled and controlled emissions are depicted by streams 20 and 21, respectively.

Streams 22 through 25 represent the flow of gases through the drying and curing system. Stream 22 represents the flow of either fuel, steam, or electrically heated air to the drying and curing operation for forced evaporative drying and for free evaporative drying. Stream 23 is the flow of gases from the drying area. Streams 24 and 25 represent uncontrolled and controlled emissions.

Streams 26 through 30 represent the flow of materials through the steam generation system. Steams 26 and 27 represent the flow of fuel and combustion air to the boiler. Stream 28 is boiler feed water, and Stream 29 is the steam produced. Stream 30 represents the flow of combustion gases from the steam generation system.(1)87,89

D. Emission Rates:

The hydrocarbon emissions from industrial surface coating operations contain solvents and resins, and arise from the three basic surface coating operations as outlined in Figure IV-45. These operations are:

1. degreasing,
2. surface coating, and
3. drying and curing.

Surface coating operations include point source emissions and fugitive emissions. The point source emissions include controlled and uncontrolled emissions from the degreasing, surface coating, and drying and curing operations. Other point sources include the degreasing solvent storage tank vent, surface coating solvent vent, surface coating blending tank vent, and the steam generation stack. The fugitive emission sources include solvent evaporation losses from degreased, coated, and dried products. The fugitive emissions include losses from each piece of processing equipment and from the transfer of organic liquids within the plant.[1]89

Table IV-17B[1]227-252 presents uncontrolled and controlled hydrocarbon emissions from the following 25 surface coated items:

1. Dyeing
2. Paper Bags
3. Metal Cans, Excluding Beverage
4. Beverage Cans
5. Kraft Paper
6. Duct Work
7. Wood Paneling
8. Canopies and Awnings
9. Milk Carton Board
10. Refrigerators
11. Folding Cartons
12. Fencing
13. Screening
14. Washers
15. Dryers
16. Enameled Plumbing Fixtures
17. Coated Paper
18. Printing Paper
19. Gutters
20. Paper Boxes
21. Sizing
22. Metal Doors, Excluding Garage
23. Bedroom Furniture
24. Filing Cabinets
25. Oil and Waxed Paper

A tally was included of the total number of units of production for each item and what a typical plant produces in a year. The emission factor is expressed in terms of lbs/unit and grams/unit. Emissions were calculated on a 24-hour production basis except where noted by the asterisks. The emissions were listed in descending order according to typical plant hourly emission rate. The emissions listed for the controlled conditions did not include solvent reformulation or water-based solvent substitution.

E. Control Equipment:

Control of hydrocarbon emissions from industrial surface coating operations are categorized according to the following:

1. process modification,
2. solvent modification, and
3. application of conventional control equipment.

TABLE IV-17B

HYDROCARBON EMISSIONS FROM INDUSTRIAL SURFACE COATING

Type of Operation & Control	% Control	Total U.S. Production Units/Year	Typical Plant Production Units/Year	Emissions/Unit		Emission Rate	
				Lbs/Unit	G/Unit	Lbs/Hr	Kg/Hr
(1) Dyeing, Uncontrolled	0	4.79×10^{9}	1.17×10^{8}	8.80×10^{-2}	3.98×10^{1}	1175.3	533.1
Dyeing, Incineration	90-99	"	"	$8.80\times10^{-3}(10^{-4})$	$3.98\times10^{0}(10^{-1})$	117.5 -11.8	53.3 - 5.3
Dyeing, Catalytic Combustion	85-95	"	"	1.32×10^{-2}-4.40×10^{-3}	5.97-1.99	176.3 -58.8	80.0 -26.7
Dyeing, Carbon Adsorption	95-98	"	"	4.40×10^{-3}-2.64×10^{-3}	1.99-.80	58.8 -23.5	26.7 -10.7
(2) Paper Bags, Uncontrolled	0	7.73×10^{11}	1.21×10^{10}	6.46×10^{-4}	2.93×10^{-1}	892.3	404.7
Paper Bags, Incineration	90-99	"	"	$6.46\times10^{-5}(10^{-6})$	$2.93\times10^{-2}(10^{-3})$	89.2 - 8.9	40.5 - 4.1
Paper Bags, Catalytic Combustion	85-95	"	"	9.69×10^{-5}-3.23×10^{-5}	4.40×10^{-2}-1.47×10^{-2}	133.8 -44.6	60.7 -20.2
Paper Bags, Carbon Adsorption	95-98	"	"	3.23×10^{-5}-1.94×10^{-5}	1.47×10^{-2}-5.86×10^{-3}	44.6 -17.8	20.2 - 8.1
(3) Metal Cans Excl. Beverage, Uncontrolled	0	3.98×10^{11}	4.91×10^{8}	1.11×10^{-2}	5.02	622.2	282.2
Metal Cans Excl. Beverage, Incineration	90-99	"	"	$1.11\times10^{-3}(10^{-4})$	$5.02\times10^{-1}(10^{-2})$	62.2 - 6.2	28.2 - 2.8
Metal Cans Excl. Beverage, Cata. Comb.	85-95	"	"	1.67×10^{-3}-5.55×10^{-4}	7.5×10^{-1}-2.5×10^{-1}	93.3 -31.1	42.3 -14.1
Metal Cans Excl. Beverage, Carbon Adsorp.	95-98	"	"	5.55×10^{-4}-3.33×10^{-4}	2.5×10^{-1}-1.0×10^{-1}	31.1 -12.4	14.1 - 5.6
(4) Beverage Cans, Uncontrolled	0	3.74×10^{10}	6.23×10^{9}	1.11×10^{-2}	5.02	622.2	282.2
Beverage Cans, Incineration	90-99	"	"	$1.11\times10^{-3}(10^{-4})$	$5.02\times10^{-1}(10^{-2})$	62.2 - 6.2	28.2 - 2.8
Beverage Cans, Catalytic Combustion	85-95	"	"	1.67×10^{-3}-5.55×10^{-4}	7.53×10^{-1}-2.5×10^{-1}	93.3 -31.1	42.3 -14.1
Beverage Cans, Carbon Adsorption	95-98	"	"	5.55×10^{-4}-3.33×10^{-4}	2.5×10^{-1}-1.0×10^{-1}	31.1 -12.4	14.1 - 5.6
(5) Kraft Paper, Uncontrolled	0	1.42×10^{10}	3.46×10^{8}	1.1×10^{-2}	4.99	434.5	197.1
Kraft Paper, Incineration	90-99	"	"	$1.1\times10^{-2}(10^{-3})$	$4.99\times10^{-1}(10^{-2})$	43.5 - 4.4	19.7 - 2.0
Kraft Paper, Catalytic Combustion	85-95	"	"	1.65×10^{-3}-5.5×10^{-4}	7.49×10^{-1}-2.50×10^{-1}	65.2 -21.7	29.6 - 9.9
Kraft Paper, Carbon Adsorption	95-98	"	"	5.5×10^{-4}-3.3×10^{-4}	2.50×10^{-1}-1.0×10^{-1}	21.7 - 8.7	9.9 - 3.9
(6) Duct Work, Uncontrolled	0	2.60×10^{6}	5.20×10^{4}	3.60×10^{1}	1.63×10^{4}	320.6*	145.4*
Duct Work, Incineration	90-99	"	"	$3.60\times10^{0}(10^{-1})$	$1.63\times10^{3}(10^{4})$	32.1 - 3.2*	14.5 - 1.5*
Duct Work, Catalytic Combustion	85-95	"	"	5.4-1.8	2.46×10^{3}-8.2×10^{2}	48.1 -16.0*	21.8 - 7.3*
Duct Work, Carbon Adsorption	95-98	"	"	1.8-1.08	8.2×10^{2}-3.28×10^{2}	16.0 - 6.4*	7.3 - 2.9*
(7) Wood Paneling, Uncontrolled	0	1.80×10^{9}	4.86×10^{7}	1.70×10^{-2}	7.86	282.9**	128.3**
Wood Paneling, Incineration	90-99	"	"	$1.70\times10^{-3}(10^{-4})$	$7.86\times10^{-1}(10^{-2})$	28.3 - 2.8**	12.8 - 1.3**
Wood Paneling, Catalytic Combustion	85-95	"	"	2.55×10^{-3}-8.50×10^{-4}	1.18-3.93x10^{-1}	42.4 -14.1**	19.2 - 6.4**
Wood Paneling, Carbon Adsorption	95-98	"	"	8.50×10^{-4}-5.1×10^{-4}	3.93×10^{-1}-1.57×10^{-1}	14.1 - 8.5**	6.4 - 2.6**
(8) Canopies and Awnings, Uncontrolled	0	1.50×10^{6}	6.00×10^{4}	1.80×10^{1}	8.17×10^{3}	185.0*	83.9*
Canopies and Awnings, Incineration	90-99	"	"	$1.80\times10^{0}(10^{-1})$	$8.17\times10^{2}(10^{1})$	18.5 - 1.9*	8.4 - .8*
Canopies and Awnings, Catalytic Combustion	85-95	"	"	2.70-9.0x10^{-1}	1.23×10^{3}-4.09×10^{2}	27.8 - 9.3*	12.6 - 4.2*
Canopies and Awnings, Carbon Adsorption	95-98	"	"	9.0×10^{-1}-5.4×10^{-1}	4.09×10^{2}-1.64×10^{2}	9.3 - 3.7*	4.2 - 1.7*
(9) Milk Carton Board, Uncontrolled	0	5.54×10^{9}	8.16×10^{7}	9.7×10^{-3}	4.38	90.3	41.0
Milk Carton Board, Incineration	90-99	"	"	$9.7\times10^{-4}(10^{-5})$	$4.38\times10^{-1}(10^{-2})$	9.0 - .9	4.1 - .4
Milk Carton Board, Catalytic Combustion	85-95	"	"	1.46×10^{-3}-4.85×10^{-4}	6.57×10^{-1}-2.63×10^{-1}	13.5 - 4.5	6.2 - 2.1
Milk Carton Board, Carbon Adsorption	95-98	"	"	4.85×10^{-4}-2.91×10^{-4}	2.19×10^{-1}-$.88\times10^{-1}$	4.5 - 1.8	2.1 - .8
(10) Refrigerators, Uncontrolled	0	6.32×10^{6}	3.01×10^{5}	2.30	1.04×10^{3}	78.9	35.8
Refrigerators, Incineration	90-99	"	"	$2.30\times10^{-1}(10^{-2})$	$1.04\times10^{2}(10^{1})$	7.9 - .8	3.6 - .4
Refrigerators, Catalytic Combustion	85-95	"	"	3.45×10^{-1}-1.15×10^{-1}	1.56×10^{2}-5.2×10^{1}	11.8 - 3.9	5.4 - 1.8
Refrigerators, Carbon Adsorption	95-98	"	"	1.15×10^{-1}-6.9×10^{-2}	5.2×10^{1}-2.08×10^{1}	3.9 - 1.6	1.8 - .7
(11) Folding Cartons, Uncontrolled	0	1.43×10^{9}	9.01×10^{7}	7.10×10^{-3}	3.24	73.0	33.1
Folding Cartons, Incineration	90-99	"	"	$7.10\times10^{-4}(10^{-5})$	$3.24\times10^{-1}(10^{-2})$	7.3 - .7	3.3 - .3
Folding Cartons, Catalytic Combustion	85-95	"	"	1.07×10^{-3}-3.55×10^{-4}	4.86×10^{-1}-1.62×10^{-1}	11.0 - 3.7	5.0 - 1.7
Folding Cartons, Carbon Adsorption	95-98	"	"	3.55×10^{-4}-2.13×10^{-4}	1.62×10^{-1}-6.5×10^{-2}	3.7 - 1.5	1.7 - .7
(12) Fencing, Uncontrolled	0	5.51×10^{5}	2.21×10^{4}	1.72×10^{1}	7.78×10^{3}	64.9*	29.4*
Fencing, Incineration	90-99	"	"	$1.72\times10^{0}(10^{-1})$	$7.78\times10^{2}(10^{1})$	6.5 - .7*	2.9 - .3*
Fencing, Catalytic Combustion	85-95	"	"	2.58×10^{0}-8.6×10^{-1}	1.17×10^{3}-3.89×10^{2}	9.7 - 3.2*	4.4 - 1.5*
Fencing, Carbon Adsorption	95-98	"	"	8.6×10^{-1}-3.44×10^{-1}	3.89×10^{2}-1.56×10^{2}	3.2 - 1.3*	1.5 - .6*
(13) Screening, Uncontrolled	0	5.77×10^{8}	1.36×10^{7}	1.70×10^{-2}	7.86	45.4*	20.6*
Screening, Incineration	90-99	"	"	$1.70\times10^{-3}(10^{-4})$	$7.86\times10^{-1}(10^{-2})$	4.5 - .5*	2.1 - .2*
Screening, Catalytic Combustion	85-95	"	"	2.55×10^{-3}-8.5×10^{-4}	1.18-3.93x10^{-1}	6.8 - 2.3*	3.1 - 1.0*
Screening, Carbon Adsorption	95-98	"	"	8.5×10^{-4}-5.1×10^{-4}	3.93×10^{-1}-1.57×10^{-1}	2.3 - .9*	1.0 - .4*

* Based on 2 shifts/day. ** Based on 1 shift/day.

(continued)

TABLE IV-17B

HYDROCARBON EMISSIONS FROM INDUSTRIAL SURFACE COATING

(continued)

Type of Operation & Control	% Control	Total U.S. Production Units/Year	Typical Plant Production Units/Year	Emissions/Unit		Emission Rate	
				Lbs/Unit	G/Unit	Lbs/Hr	Kg/Hr
(14) Washers, Uncontrolled	0	5.11×10^{6}	3.19×10^{5}	1.13	5.13×10^{2}	41.1	18.6
Washers, Incineration	90-99	"	"	$1.13\times10^{-1}(10^{-2})$	$5.13\times10^{1}(10^{0})$	4.1 - .4	1.9 - .2
Washers, Catalytic Combustion	85-95	"	"	$1.70\times10^{-1}-5.65\times10^{-2}$	$7.70\times10^{1}-2.57\times10^{1}$	6.2 - 2.1	2.8 - .9
Washers, Carbon Adsorption	95-98	"	"	$5.65\times10^{-2}-2.26\times10^{-2}$	$2.57\times10^{1}-1.03\times10^{1}$	2.1 - .8	.9 - .4
(15) Dryers, Uncontrolled	0	3.92×10^{6}	2.31×10^{5}	1.52	6.88×10^{2}	40.1	18.2
Dryers, Incineration	90-99	"	"	$1.52\times10^{-1}(10^{-2})$	$6.88\times10^{1}(10^{0})$	4.0 - .4	1.8 - .2
Dryers, Catalytic Combustion	85-95	"	"	$2.28\times10^{-1}-7.6\times10^{-2}$	$1.03\times10^{2}-3.44\times10^{1}$	6.0 - 2.0	2.7 - .9
Dryers, Carbon Adsorption	95-98	"	"	$7.6\times10^{-2}-3.04\times10^{-2}$	$3.44\times10^{1}-1.38\times10^{1}$	2.0 - .8	.9 - .4
(16) Enameled Plumbing Fixtures, Uncontrolled	0	1.40×10^{7}	6.66×10^{5}	4.42×10^{-1}	2.01×10^{2}	33.6	15.2
Enameled Plumbing Fixtures, Incineration	90-99	"	"	$4.42\times10^{-2}(10^{-3})$	$2.01\times10^{1}(10^{0})$	3.4 - .3	1.5 - .2
Enameled Plumbing Fixtures, Cata. Comb.	85-95	"	"	$6.63\times10^{-2}-2.21\times10^{-2}$	3.02-1.01	5.0 - 1.7	2.3 - .8
Enameled Plumbing Fixtures, Carbon Adsorp.	95-98	"	"	$2.21\times10^{-2}-8.84\times10^{-3}$	1.01-.40	1.7 - .7	.8 - .3
(17) Coated Paper, Uncontrolled	0	1.89×10^{11}	3.44×10^{9}	8.20×10^{-5}	3.71×10^{-1}	32.2	14.6
Coated Paper, Incineration	90-99	"	"	$8.20\times10^{-6}(10^{-7})$	$3.71\times10^{-2}(10^{-3})$	3.2 - .3	1.5 - .15
Coated Paper, Catalytic Combustion	85-95	"	"	$1.23\times10^{-5}-4.1\times10^{-6}$	$5.57\times10^{-2}-2.23\times10^{-2}$	4.8 - 1.6	2.2 - .7
Coated Paper, Carbon Adsorption	95-98	"	"	$4.1\times10^{-6}-2.46\times10^{-6}$	$1.86\times10^{-2}-1.11\times10^{-2}$	1.6 - .6	.7 - .3
(18) Printing Paper, Uncontrolled	0	8.24×10^{11}	1.92×10^{9}	1.40×10^{-4}	6.2×10^{-2}	30.7	13.9
Printing Paper, Incineration	90-99	"	"	$1.40\times10^{-5}(10^{-6})$	$6.2\times10^{-3}(10^{-4})$	3.1 - .31	1.4 - .1
Printing Paper, Catalytic Combustion	85-95	"	"	$2.1\times10^{-5}-7.0\times10^{-5}$	$9.3\times10^{-3}-3.1\times10^{-3}$	4.6 - 1.5	2.1 - .7
Printing Paper, Carbon Adsorption	95-98	"	"	$7.0\times10^{-6}-4.2\times10^{-6}$	$3.1\times10^{-3}-1.24\times10^{-3}$	1.5 - .6	.7 - .3
(19) Gutters, Uncontrolled	0	1.39×10^{5}	4.63×10^{3}	36.0	1.63×10^{4}	28.5*	12.9*
Gutters, Incineration	90-99	"	"	3.6-.36	$1.63\times10^{3}(10^{2})$	2.9 - .3*	1.3 - .13*
Gutters, Catalytic Combustion	85-95	"	"	5.42-1.81	$2.45\times10^{3}-8.15\times10^{2}$	4.3 - 1.4*	1.9 - .6 *
Gutters, Carbon Adsorption	95-98	"	"	1.81-7.2x10^{-1}	$8.15\times10^{2}-3.26\times10^{2}$	1.4 - .6*	.6 - .3 *
(20) Paper Boxes, Uncontrolled	0	1.07×10^{12}	6.73×10^{9}	3.40×10^{-5}	1.53×10^{-2}	26.1	11.8
Paper Boxes, Incineration	90-99	"	"	$3.40\times10^{-6}(10^{-7})$	$1.53\times10^{-3}(10^{-4})$	2.6 - .3	1.2 - .1
Paper Boxes, Catalytic Combustion	85-95	"	"	$5.1\times10^{-6}-1.7\times10^{-6}$	$2.30\times10^{-3}-7.65\times10^{-4}$	3.9 - 1.3	1.8 - .6
Paper Boxes, Carbon Adsorption	95-98	"	"	$1.7\times10^{-6}-1.02\times10^{-6}$	$7.65\times10^{-4}-3.06\times10^{-4}$	1.3 - .5	.6 - .2
(21) Sizing, Uncontrolled	0	1.09×10^{10}	7.08×10^{7}	2.16×10^{-3}	9.78×10^{-1}	17.8	8.1
Sizing, Incineration	90-99	"	"	$2.16\times10^{-4}(10^{-5})$	$9.78\times10^{-2}(10^{-3})$	1.8 - .2	.8 - .08
Sizing, Catalytic Combustion	85-95	"	"	$3.24\times10^{-4}-1.08\times10^{-4}$	$1.47\times10^{-1}-5.9\times10^{-2}$	2.7 - .9	1.2 - .4
Sizing, Carbon Adsorption	95-98	"	"	$1.08\times10^{-4}-6.48\times10^{-5}$	$4.89\times10^{-2}-1.96\times10^{-2}$	.9 - .4	.4 - .2
(22) Metal Doors Excl. Garage Doors, Uncont.	0	6.97×10^{6}	1.34×10^{5}	7.30×10^{-1}	3.31×10^{2}	16.8*	7.6*
Metal Doors Excl. Garage Doors, Incin.	90-99	"	"	$7.30\times10^{-2}(10^{-3})$	$3.31\times10^{1}(10^{0})$	1.7 - .2*	.8 - .08*
Metal Doors Excl. Garage Doors, Cat. Comb.	85-95	"	"	$1.10\times10^{-1}-3.65\times10^{-2}$	$4.97\times10^{1}-1.67\times10^{1}$	2.5 - .8*	1.1 - .4 *
Metal Doors Excl. Garage Doors, Carbon Ads.	95-98	"	"	$3.65\times10^{-2}-1.46\times10^{-2}$	$1.67\times10^{1}-6.68$	.8 - .3*	.4 - .2 *
(23) Bedroom Furniture, Uncontrolled	0	1.69×10^{7}	1.99×10^{5}	4.93×10^{-1}	2.24×10^{2}	16.8*	7.6*
Bedroom Furniture, Incineration	90-99	"	"	$4.93\times10^{-2}(10^{-3})$	$2.24\times10^{1}(10^{3})$	1.7 - .2*	.8 - .08*
Bedroom Furniture, Catalytic Combustion	85-95	"	"	$7.40\times10^{-2}-2.47\times10^{-2}$	$3.36\times10^{1}-1.12\times10^{1}$	2.5 - .8*	1.1 - .4 *
Bedroom Furniture, Carbon Adsorption	95-98	"	"	$2.47\times10^{-2}-1.48\times10^{-2}$	$1.12\times10^{1}-4.5$	.8 - .3*	.4 - .2 *
(24) Filing Cabinets, Uncontrolled	0	3.77×10^{6}	5.39×10^{4}	1.63	7.38×10^{2}	15.0*	6.8*
Filing Cabinets, Incineration	90-99	"	"	$1.63\times10^{-1}(10^{-2})$	$7.38\times10^{1}(10^{0})$	1.5 - .2*	.7 - .07*
Filing Cabinets, Catalytic Combustion	85-95	"	"	$2.45\times10^{-1}-8.15\times10^{-2}$	$1.11\times10^{2}-3.65\times10^{1}$	2.3 - .8*	1.0 - .3 *
Filing Cabinets, Carbon Adsorption	95-98	"	"	$8.15\times10^{-2}-3.26\times10^{-2}$	$3.65\times10^{1}-1.48\times10^{1}$	.8 - .3*	.3 - .1 *
(25) Oil and Waxed Paper, Uncontrolled	0	9.80×10^{8}	2.79×10^{5}	8.50×10^{-1}	3.84×10^{1}	2.71	1.23
Oil and Waxed Paper, Incineration	90-99	"	"	$8.50\times10^{-2}(10^{-3})$	$3.84\times10^{0}(10^{-1})$	.3 - .03	.1 - .01
Oil and Waxed Paper, Catalytic Combustion	85-95	"	"	$1.28\times10^{-1}-4.25\times10^{-2}$	5.76-1.92	.40- .13	.2 - .06
Oil and Waxed Paper, Carbon Adsorption	95-98	"	"	$4.25\times10^{-2}-2.55\times10^{-2}$	1.92-.77	.13- .05	.06- .02

* Based on 2 shifts/day. ** Based on 1 shift/day.

1. Process Modification: The three basic processes, degreasing, surface coating, and drying, can be modified to decrease hydrocarbon emissions.

   Degreasing units can be equipped with cooling coils to condense solvent vapors before they escape from the top of the tank. Cooling coils achieve 20% to 40% control. Degreasing tanks can also be equipped with sliding or guillotine covers which are closed when the tank is not in use. Covers achieve 40% to 60% control.(3)8

2. Solvent Modification: Reformulation of solvent-based coatings to utilize solvents that are exempt from Rule 66-type legislation is often more complicated and expensive than the ones they are replacing. In reformulating surface coating products, efforts are made to retain the viscosity and drying characteristics of the original solvent.(1)150

   Another type of reformulation which reduces emissions of organic solvents instead of just the "reactive solvents" is the reformulation to water-based coatings. Water differs from organic solvents in physical properties, particularly its latent heat of vaporization. Water is a costly solvent to evaporate, and its rate of evaporation is difficult to control with additives. The films resulting from water-based solvents are often less glossy than those from solvent-based paints. Water-based coatings tend to rust metal, and they adhere poorly to surfaces contaminated with oil or dirt.(1)151

3. Application of Conventional Control Equipment: Hydrocarbon emissions from surface coating operations arise in a number of specific emission points about the plant. These can be collected to one central point and treated in a conventional solvent removal system. The three main types of solvent removal systems are:

   a. thermal combustion,
   b. catalytic combustion, and
   c. adsorption.

   Thermal combustion incinerates the hydrocarbon emissions from the collective surface coating vents in a gas or oil fired flame. The gases are preheated to 600°F to 900°F and incinerated at 1200°F to 1600°F. Fuel consumption is dependent upon the amount of heat exchange employed and the operating temperature. Thermal incinerators are capable of operating continuously at efficiencies of 90% to 99%. Figure IV-46(2)358 presents a flow diagram for thermal combustion.

   Catalytic combustion causes flameless oxidation of the undesired hydrocarbon from the surface coating exhaust. The oxidation occurs with a catalyst of a platinum group metal deposited on a ceramic base or metal ribbon. Figure IV-47(2)359 is a schematic of a catalytic incinerator. Efficiencies range between 85% and 95% depending on the application.

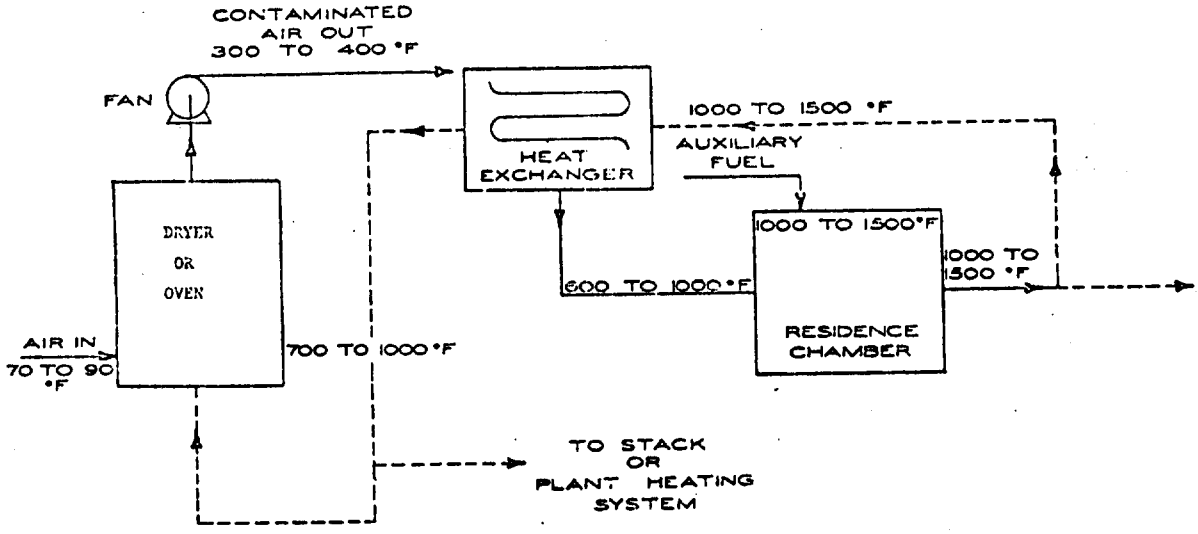

Figure IV-46: Flow Diagram for Thermal Combustion Including Possibilities for Heat Recovery

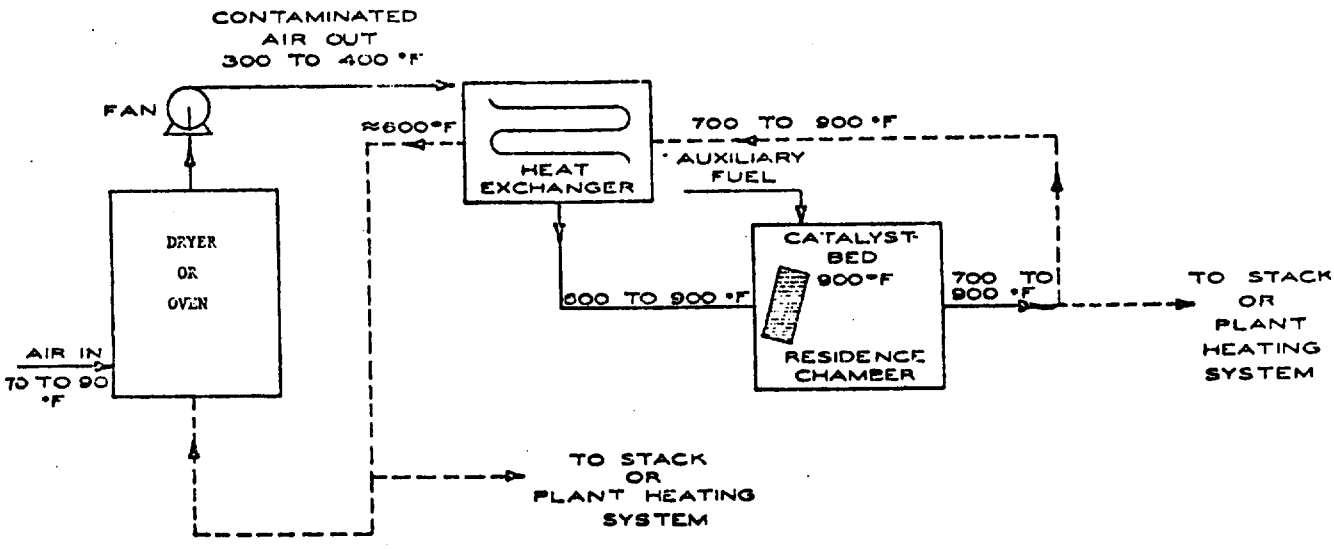

Figure IV-47: Flow Diagram for Catalytic Combustion Including Possibilities for Heat Recovery

Adsorption is the removal of hydrocarbons from a gas stream by means of an activated bed of carbon. When the adsorptive capacity of the bed is reached, the gas stream is diverted to an alternate bed. The original bed is regenerated with steam or hot air. If hydrocarbon solvent is not miscible in water, it can be recovered by decantation; otherwise, distillation is necessary. Figure IV-48(2)360 presents a flow diagram for an adsorption process. A well-designed bed will absorb 15% of its own weight of solvent before regeneration is required. The efficiencies of a well-designed bed are 95%-98%.(1)140

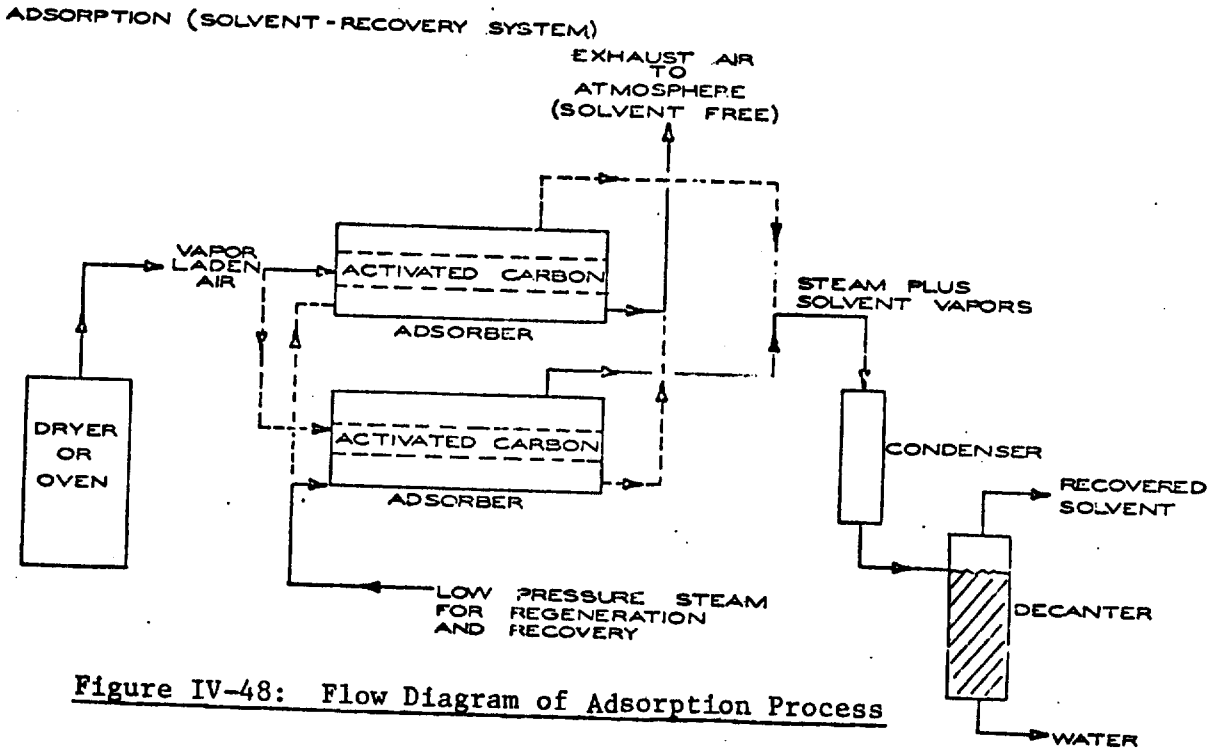

Figure IV-48: Flow Diagram of Adsorption Process

F. New Source Performance Standards and Regulation Limitations:

New Source Performance Standards (NSPS): No New Source Performance Standards have been promulgated for the industrial surface coating industry.

State Regulations for New and Existing Sources: Currently, hydrocarbon emission regulations are patterned after Los Angeles Rule 66 and Appendix B type legislation. Organic solvent useage is categorized by three basic process types. These are, (1) heating of articles by direct flame or baking with any organic solvent, (2) discharge into the atmosphere of photochemically reactive solvents by devices that employ or apply the solvent, (also includes air or heated drying of articles for the first twelve hours after removal from #1 type device) and (3) discharge into the atmosphere of non-photochemically reactive solvents. For the purposes of Rule 66, reactive solvents are defined as solvents of more than 20% by volume of the following:

1. A combination of hydrocarbons, alcohols, aldehydes, esters, ethers or ketones having an olefinic or cyclo-olefinic type of unsaturation: 5 per cent
2. A combination of aromatic compounds with eight or more carbon atoms to the molecule except ethylbenzene: 8 per cent
3. A combination of ethylbenzene, ketones having branched hydrocarbon structures, trichloroethylene or toluene: 20 per cent

Rule 66 limits emissions of hydrocarbons according to the three process types. These limitations are as follows:

Process	lbs/day	& lbs/hour
1. heated process	15	3
2. unheated photochemically reactive	40	8
3. non-photochemically reactive	3000	450

Appendix B (Federal Register Vol. 36, No. 158 - Saturday, August 14, 1971) limits the emission of photchemically reactive hydrocarbons to 15 lbs/day and 3 lbs/hr. Reactive solvents can be exempted from the regulation if the solvent is less than 20% of the total volume of a water based solvent. Solvents which have shown to be virtually unreactive are, saturated halogenated hydrocarbons, perchloroethylene, benzene, acetone and c_1-c_5n-paraffins.

For both Appendix B and Rule 66 type legislation if 85% control has been demonstrated the regulation has been met by the source even if the lbs/day and lbs/hr values have been exceeded. Most states have regulations that limit the emissions from handling and use of organic solvents. Alabama, Connecticut and Ohio have regulations patterned after Los Angeles Rule 66. Indiana and Louisiana have regulations patterned after Appendix B. Some states such as North Carolina have an organic solvent regulation which is patterned after both types of regulations.

Table IV-18 presents the uncontrolled emission rate for the typical plant production listed in Table IV-17B and the percent control necessary to meet the 3 lbs/hour limitation.

TABLE IV-18

HYDROCARBON EMISSIONS AND LIMITATIONS
FOR INDUSTRIAL SURFACE COATING

Type of Product	Uncontrolled Emissions from Typical Plant		% Control Necessary to Meet 3 lbs/hour Limitations
	lbs/ hour	kg/ hour	
1. Dyeing	1175.3	533.1	99.7
2. Paper Bags	892.3	404.7	99.7
3. Metal Cans, Excluding Beverage	622.2	282.2	99.5
4. Beverage Cans	622.2	282.2	99.5
5. Kraft Paper	434.5	197.0	99.3
6. Duct Work	320.6	145.4	99.0
7. Wood Paneling	282.9	128.3	98.9
8. Canopies and Awnings	185.0	83.9	98.3
9. Milk Carton Board	90.3	41.0	96.6
10. Refrigerators	78.9	35.8	96.2
11. Folding Cartons	73.0	33.1	95.9
12. Fencing	64.9	29.4	95.3
13. Screening	45.4	20.6	93.4
14. Washers	41.1	18.6	92.7
15. Dryers	40.1	18.2	92.5
16. Enameled Plumbing Fixtures	33.6	15.2	91.0
17. Coated Paper	32.2	14.6	90.7
18. Printing Paper	30.7	13.9	90.2
19. Gutters	28.5	12.9	89.5
20. Paper Boxes	26.1	11.8	88.5
21. Sizing	17.8	8.1	83.1
22. Metal Doors, Excluding Garage Doors	16.8	7.6	82.0
23. Bedroom Furniture	16.8	7.6	82.0
24. Filing Cabinets	15.0	6.8	80.0
25. Oil and Waxed Paper	2.7	1.2	0.0

Potential Source Compliance and Emission Limitations: Hydrocarbon emission limitations are not based on process weight. Industrial surface coating operations as outlined in Section D cover a wide variety of process weights and formulations. The typical oil and waxed paper plant, even uncontrolled, emits less than 3 lbs/hour. The typical dyeing, paper bag, metal can, beverage can, and kraft paper plants require control efficiencies in excess of 99% to meet the 3 lbs/hour limitation. Current technology as documented in Section E presents 99% as the highest efficiency a thermal incinerator could provide. For the processes listed above that would require efficiencies in excess of 99%, it is doubtful that existing control technology is adequate to meet the 3 lbs/hr limitation. The remaining industries outlined in Section D can be adequately controlled with existing technology.

The Environment Reporter was used to update the emission limitations.

G. References:

Literature used to develop the information presented in this section on industrial surface coating is listed below:

1. Priorization of Sources of Air Pollution from Industrial Surface Coating Operations, Monsanto Research Corporation, Prepared for National Environmental Research Center, February 1975.

2. Background Information for Stationary Source Categories, Provided by EPA, Joseph J. Sableski, Chief, Industrial Survey Section, Industrial Studies Branch, November 3, 1972.

3. Organic Compound Emission Sources, Emission Control Techniques and Emission Limitation Guidelines (Draft), EPA Emission Standards and Engineering Division, June 1974.

Literature reviewed but not used specifically to develop this section on industrial surface coating includes the following:

4. Compilation of Air Pollutant Emission Factors (Second Edition), EPA, Publication No. AP-42, April 1973.

5. Danielson, J. A., Air Pollution Engineering Manual, Second Edition), AP-40, Research Triangle Park, North Carolina, EPA. May 1973.

6. Air Pollution Control Technology and Costs in Seven Selected Areas, Industrial Gas Cleaning Institute, EPA, Contract No. 68-02-0289, December 1973.

7. Analysis of Final State Implementation Plans - Rules and Regulations, EPA, Contract No. 68-02-0248, July 1972, Mitre Corporation.

8. Organic Compound Emission Sources, Emission Control Techniques, and Emission Limitation Guidelines (Draft), EPA, Emission Standards and Engineering Division, June 1974.

9. Control Techniques for Hydrocarbon and Organic Solvent Emissions from Stationary Sources, U. S. Department of Health, Education, and Welfare, National Air Pollution Control Administration, Publication No. AP-68, March 1970.

A. Source Category: IV Evaporation Losses

B. Sub Category: Petroleum Storage Gasoline (Breathing)

C. Source Description:

Breathing losses from bulk storage of gasoline occur continuously from fixed roof tanks. These are constructed in a variety of shapes, but cylinders and spheres are most common. Steel plate is the material most commonly used, and the plates are welded together. There are seven basic storage vessel designs:

1. fixed roof,
2. floating roof,
3. covered floating roof,
4. internal floating cover,
5. variable vapor space,
6. low pressure,
7. high pressure.

The ultraflote floating cover design allows a vapor space between the cover and the liquid. The covered floating roof contains a metal pan equipped with a seal that floats on the liquid. The internal floating cover is non-metallic (usually polyurethane) and may not be in contact with the liquid over its entire surface. The external floating roof is the most widely used single deck pontoon type of floating roof tank. There are two types of pressure tanks: low pressure designed for 17-30 psia and high pressure - up to 265 psia. Breathing losses from low pressure tanks are minimal, but filling losses are substantial. Figures IV-2, 3 and 4 present sketches of fixed roof, floating roof, and variable vapor space storage vessels.

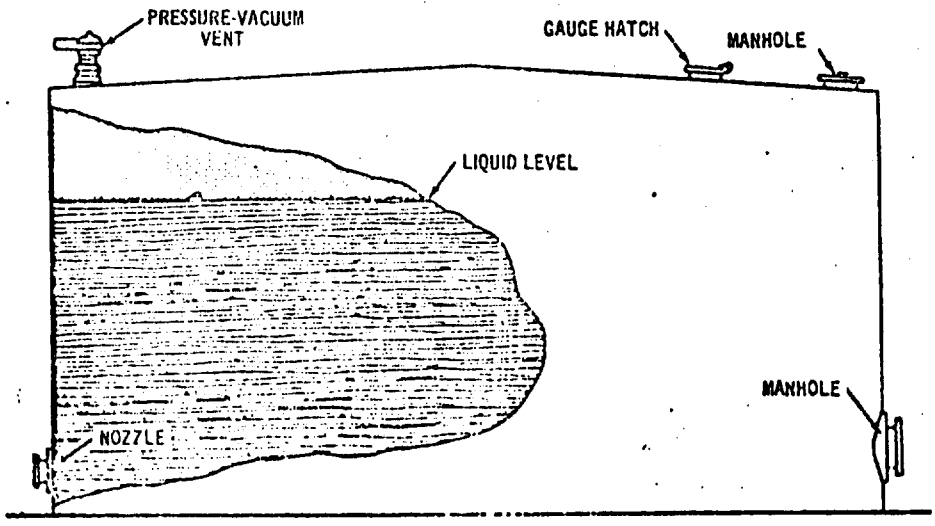

Figure IV-2: Fixed Roof Storage Tank

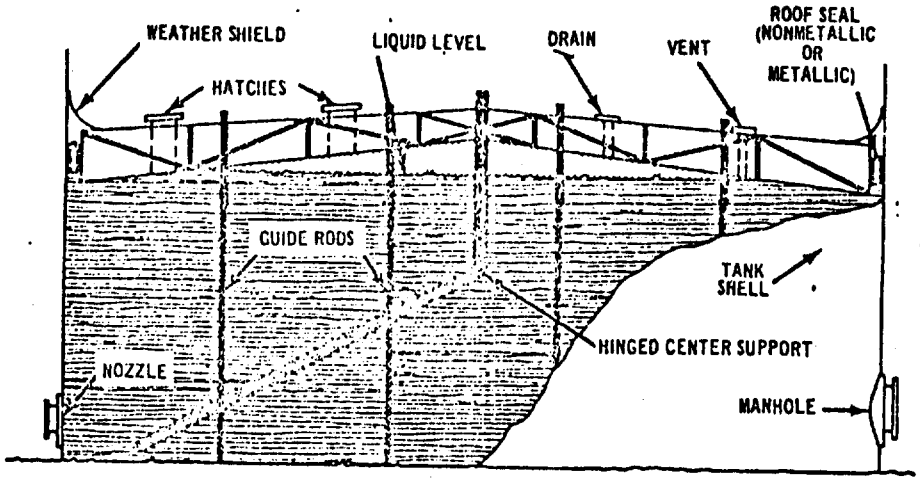

Figure IV-3: Double-Deck Floating Roof Storage Tank (Nonmetallic Seal)

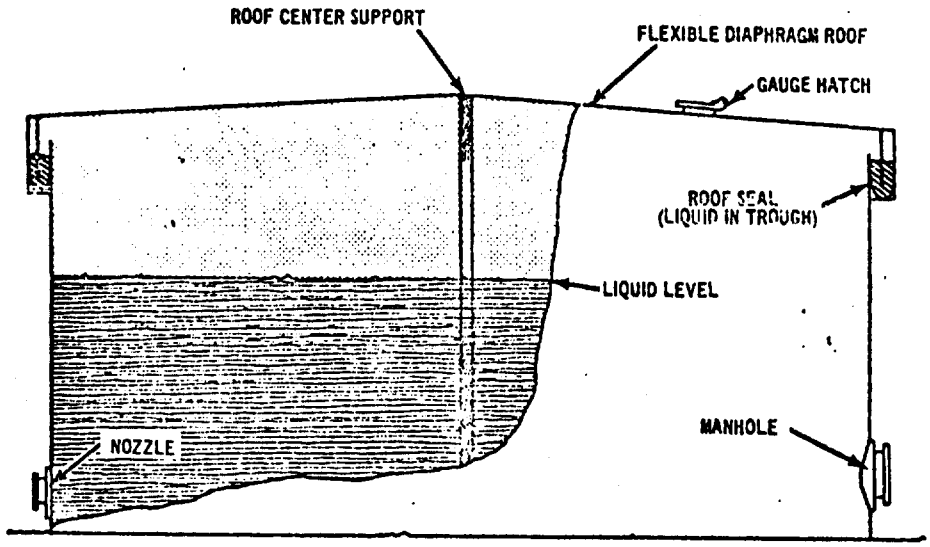

Figure IV-4: Variable Vapor Storage Tank (Wet-Seal Lifter Type)

D. Emission Rates:

"Breathing" losses are defined as vapors expelled from a storage vessel because of the following:(4) 9

1. thermal expansion of existing vapors,
2. expansion caused by barometric pressure changes,
3. increase in the amount of vapor from added vaporization in the absence of liquid level change.

The quantity of these "breathing" losses are affected by a number of factors, including:

1. vapor pressure of gasoline,
2. average temperature of stored gasoline,
3. vessel diameter and construction,
4. color of vessel paint,
5. average wind velocity of area,
6. age of vessel.

Capacities of storage vessels range from a few gallons to 500,000 barrels (8.0×10^7 liters), but tanks with capacities in excess of 150,000 barrels (2.4×10^7 liters) are rare.(1)626 Typical fixed and floating roof tanks are 48 feet (14.6 m) high and 110 feet (33.5 m) in diameter with a capacity of 67,000 barrels (1.07×10^7 liters).(2)4.3-8 Table IV-19(2)4.3-8-4.39 presents controlled and uncontrolled hydrocarbon emissions from gasoline storage vessels.

TABLE IV-19

HYDROCARBON BREATHING EMISSIONS FROM GASOLINE STORAGE TANKS

Type of Operation & Control	% Control	Emissions Based on 67,000 bbl Tank			
		$\frac{lbs}{day}/10^3 gal$	$\frac{kg}{day}/10^3 l$	$\frac{lbs}{day}$	$\frac{kg}{day}$
Fixed-Roof Old Tank, Uncontrolled	0	.25	.030	700	320
Fixed-Roof New Tank, Uncontrolled	0	.22	.026	620	280
Floating-Roof Old Tank, Controlled	65	.088	.011	250	110
Floating-Roof New Tank, Controlled	85	.033	.004	93	42

E. Control Equipment:

A floating roof tank is essentially a controlled fixed roof tank. However, vapors that are continuously released from both on a daily and yearly basis amount to a small percentage of the total volume of liquid stored. The control methods most commonly used with fixed roof tanks is a vapor recovery system. The Four recovery methods are:(2) 4.3-7

1. liquid absorption,
2. vapor condensation, and
3. adsorption in activated charcoal or silica gel,
4. incineration

F. New Source Performance Standards and Regulation Limitations:

New Source Performance Standards (NSPS): EPA promulgated, in the Friday, March 8, 1974 Federal Register, a "New Source Performance Standard" for storage vessels for petroleum liquids. The standard applies to vessels greater than 40,000 gallons (151,412 liters) containing petroleum liquids that have a true vapor pressure greater than 1.5 psia (78 mm Hg). If the vapor pressure

is greater than 1.5 psia (78 mm Hg) and less than 11.0 psia (570 mm Hg) a floating roof or equivalent control is required. If the pressure is greater than 11.0 psia (570 mm Hg) a vapor recovery system or equivalent control is required.

State Regulations for New and Existing Sources: Many states and local legislatures have regulations covering petroleum storage. These regulations are similar to Appendix B (Federal Register, August 14, 1971) which requires the use of pressure tanks, vapor loss control devices and vapor recovery systems. Some states have specified either an emission rate or a control efficiency expected. Most states simply have required specific equipment be utilized.

Appendix B states that storage of volatile organic compounds in any stationary tank greater than 40,000 gallons (151,412 liters) can be a pressure tank. If a pressure tank is not possible a floating roof, consisting of a pontoon type double deck roof, or internal floating cover with seals to close the space between the roof edge and tank wall may be used. If the vapor pressure is greater than 11.0 psia (570 mm Hg) than a vapor recovery system will be necessary. This will consist of a vapor gathering system and a vapor disposal system. All gauging and sampling devices must be gas-tight except when gauging or sampling is taking place.

Table IV-20 presents regulation requirements and limitations of various tank sizes for gasoline storage.

TABLE IV-20

HYDROCARBON LIMITATIONS FOR BREATHING LOSSES FROM GASOLINE STORAGE

State	Tank Size (Gallons)	Requirements
Alabama	60,000	pressure vessel or floating roof <11.0 psia, >11.0 psia vapor recovery
Arizona	65,000	pressure vessel or floating roof >2.0 psia
California	>250	submerged fill unless pressure tank, vapor recovery, floating roof
Colorado	40,000	pressure vessel <11.0 psia, >11.0 psia vapor recovery
Connecticut	40,000	floating roof, pontoon double deck or vapor recovery not for facilities before 1972
Washington,D.C.	40,000	floating roof, pontoon double deck >1.5 psia <11.0 psia, >11.0 vapor recovery
Hawaii	40,000	pressure vessel or floating roof <11.0 psia, >11.0 psia vapor recovery
Illinois	40,000	floating roof <12.5 psia, >12.5 psia vapor recovery 85%, vapor disposal prevent emissions
Indiana	40,000	floating roof, pontoon double deck if <12.0 psia, >12.0 psia vapor recovery
Kansas	40,000	floating roof, pontoon double deck <13.0 psia, >13.0 psia vapor recovery
Kentucky	40,000	floating roof, pontoon double deck >1.5 psia <11.1 psia, >11.1 psia vapor recovery
Louisiana	40,000	new, floating roof, pontoon double deck <11.0 psia >11.0 psia vapor recovery
Maryland	40,000	floating roof
Massachusetts	250-40,000	submerged fill
Minnesota	65,000	pressure vessel, floating roof >2.5 psia <12.5 psia, >12.5 psia vapor recovery
Nevada	40,000	floating roof double deck >1.5 psia
New Jersey	-	function of tank size and vapor pressure
North Carolina	50,000	floating roof >1.5 psia <11.0 psia, >11.0 psia vapor recovery
Ohio	65,000	floating roof, double deck pontoon, vapor recovery
Oklahoma	-	submerged fill
Oregon	40,000	vapor recovery or equivelent, new
Pennsylvania	40,000	vapor recovery >11.0 psia
Puerto Rico	40,000	vapor recovery >11.0 psia
Rhode Island	40,000	pressure vessel or vapor recovery
Texas	>1,000	submerged fill
Utah	-	floating roof, vapor recovery >1.5 psia
Virginia	40,000	pressure vessel, floating roof, pontoon double deck, 90% efficiency
Wisconsin	40,000	floating roof, pontoon double deck, vapor recovery

Potential Source Compliance and Emissions Limitations: Existing vapor recovery technology is adequate to meet state regulations for storage of gasoline.

The Environment Reporter was used to update emission limitations.

G. References:

Literature used to develop the information for "Petroleum Storage Gasoline Breathing Losses" is listed below:

(1) Danielson, J. A., Air Pollution Engineering Manual, Second Edition, AP-40, Research Triangle Park, North Carolina, EPA, May 1973.

(2) Compilation of Air Pollutant Emission Factors (Second Edition), EPA, Publication No. AP-42, March 1975.

(3) Analysis of Final State Implementation Plans - Rules and Regulations, EPA, Contract 68-02-0248, July 1972, Mitre Corporation.

(4) API Bulletin on Evaporation Loss in the Petroleum Industry - Cause and Control, February 1959.

A. Source Category: IV Evaporation Losses

B. Sub Category: Petroleum Storage Gasoline (Working)

C. Source Description:

Working losses from the bulk storage of gasoline occur when a storage vessel is filled and emptied. The storage vessels are constructed in a variety of shapes, but most common are cylinders and spheres. Steel Plate is the material most commonly used, and the plates are welded rather than bolted together. The six basic storage vessel designs are:

1. fixed roof,
2. floating roof,
3. covered floating roof,
4. internal floating cover,
5. variable vapor space, and
6. pressure,
7. fixed pressure.

The floating roof, covered floating roof, and internal floating cover are similar in configuration because they minimize the vapor space above the liquid. Figures IV-6, 7, and 8 present fixed roof, floating roof, and variable vapor space vessel, respectively. [2][4,3-2]

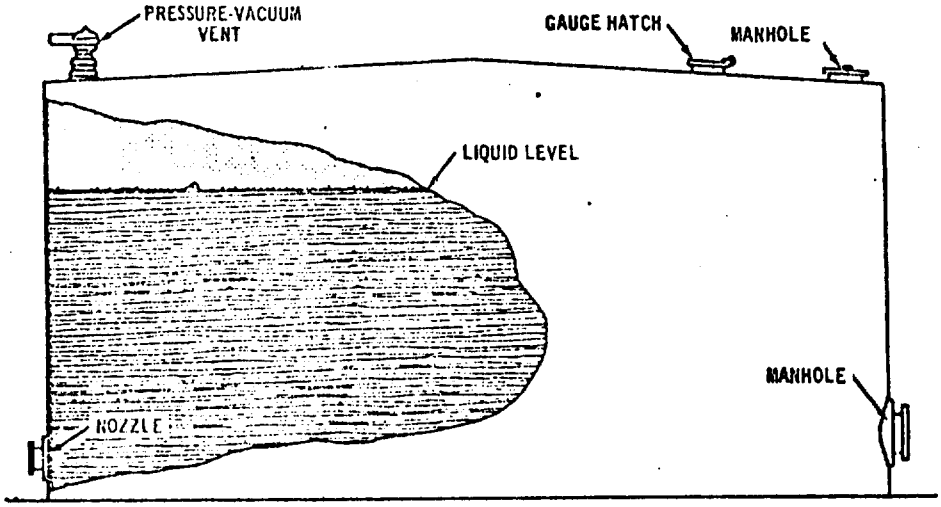

Figure IV-6: Fixed Roof Storage Tank

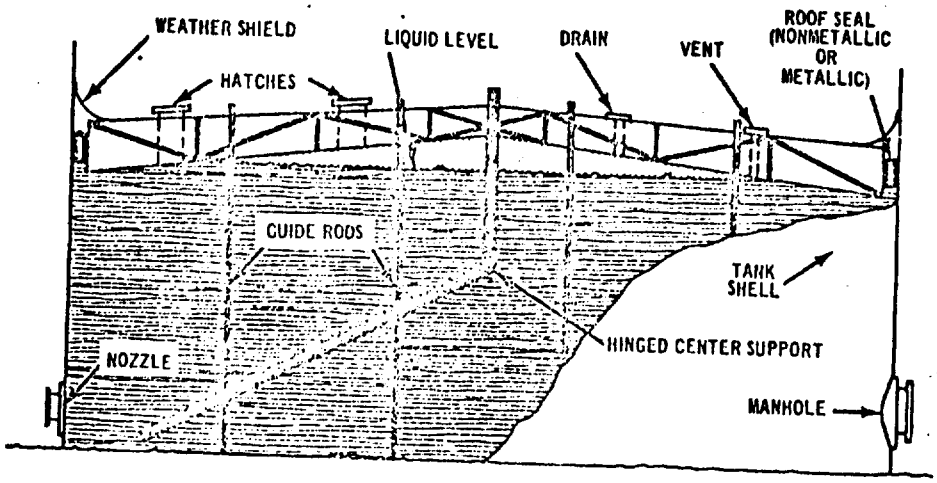

Figure IV-7: Double-Deck Floating Roof Storage Tank (Nonmetallic Seal)

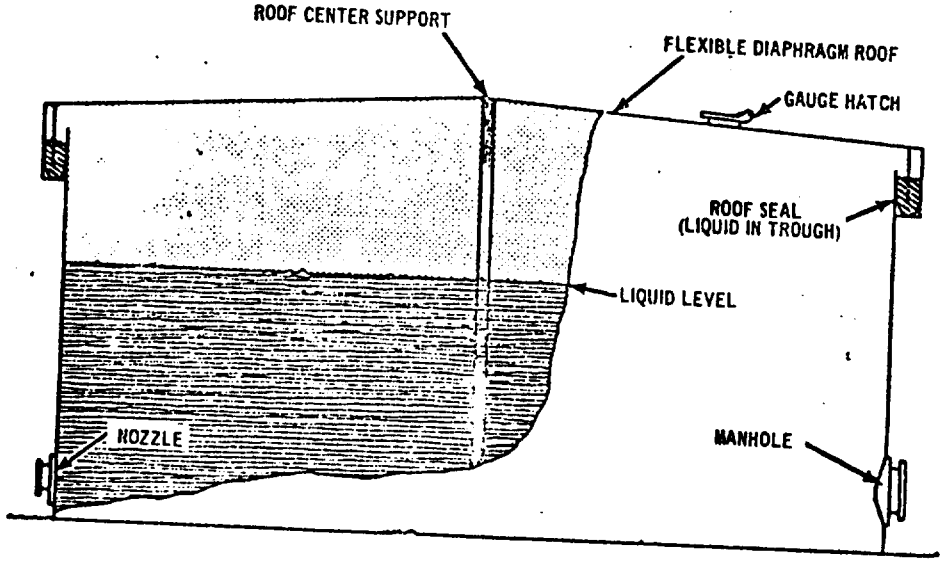

Figure IV-5: Variable Vapor Storage Tank (Wet-Seal Lifter Type)

D. Emission Rates:

Working losses from the bulk storage of gasoline are defined as the vapors expelled from a vessel as a result of filling, irrespective of the exact mechanism by which the vapors are produced. Working losses also include the subsequent vapor release as a result of emptying a storage vessel. The vaporization of the liquid remaining in a storage vessel after emptying lags behind the expansion of the vapor space during withdrawal, and the partial pressure of the hydrocarbon vapor drops. Enough air enters during the withdrawal to maintain total pressure at atmospheric pressure. When vaporization of the remaining liquid into the new air reaches equilibrium, the vapor volume exceeds the capacity of the vapor space. This increase in vapor volume causes some of the vapor to escape.(4)9

Working losses are a function of the following:

1. loading rate,
2. vessel construction,
3. ambient temperature,
4. vapor pressure of gasoline,
5. type of recovery system,
6. day/night temperature change, and
7. change in atmospheric pressure.

Size and type of vessel construction are fixed parameters once a vessel has been installed. Capacities of storage vessels range from a few gallons to 500,000 barrels (8.0×10^7 liters) but tanks with capacities in excess of 150,000 barrels (2.4×10^7 liters) are rare.(1)626 Table IV-21(2)4.3-9 presents hydrocarbon emissions from gasoline working losses.

TABLE IV-21

HYDROCARBON EMISSIONS FROM GASOLINE WORKING LOSSES

Type of Equipment & Control	% Control	Throughput lbs/ 10^3 gal	Throughput kg/ 10^3 l	Emissions Based on 231 x 10^3 gal/day Thrpt lbs/ hr	Emissions Based on 231 x 10^3 gal/day Thrpt kg/ hr	Emissions Based on 7x10^3 gal/day Thrpt lbs/ hr	Emissions Based on 7x10^3 gal/day Thrpt kg/ hr
Fixed Roof Uncontrolled	0	9.0	1.1	86.6	39.3	-	-
Variable Vapor Space Uncontrolled	0	10.2	1.2	-	-	2.96	1.34
Fixed Roof with Vapor Recovery	95	.5	.06	4.33	1.96	-	-

E. Control Equipment:

A floating roof tank is essentially a controlled fixed roof tank. However, vapors that are released from both during filling and emptying amount to a small percentage of the total volume of the liquid transferred. The control methods most commonly used with fixed and floating roof tanks are vapor recovery systems which collect hydrocarbon vapors from storage vessels and strip the volatiles from the vented air. The four recovery methods are:(2)4.3-7

1. liquid absorption,
2. vapor compression,
3. vapor condensation, and
4. adsorption in activated charcoal or silica gel.

F. New Source Performance Standards and Regulation Limitations:

New Source Performance Standards (NSPS): EPA promulgated, in the Friday, March 8, 1974 Federal Register, a "New Source Performance Standard" for storage vessels for petroleum liquids. The standard applies to vessels greater than 40,000 gallons (151,412 liters) containing petroleum liquids that have a true vapor pressure greater than 1.5 psia (78 mm Hg). If the vapor pressure is greater than 1.5 psia (78 mm Hg) and less than 11.0 psia (570 mm Hg) a floating roof or equivalent control is required. If the pressure is greater than 11.0 psia (570 mm Hg) a vapor recovery system or equivalent control is required.

State Regulations for New and Existing Sources: Many states and local legislatures have regulations covering working losses from gasoline storage. These regulations are similar to Appendix B (Federal Register, August 14, 1971) which requires the use of pressure tanks, vapor loss control devices and vapor recovery systems. Some states have specified either an emission rate or a control efficiency expected. Most states simply have required specific types of equipment be utilized.

Appendix B states that storage of volatile organic compounds in any stationary tank greater than 40,000 gallons (151,412 liters) can be a pressure tank. If a pressure tank is not possible a floating roof, consisting of a pontoon type double deck roof, or internal floating cover with seals to close the space between the roof edge and tank wall may be used. If the vapor pressure is greater than 11.0 psia (570 mm Hg) than a vapor recovery system will be necessary. This will consist of a vapor gathering system and a vapor disposal system. All gauging and sampling devices must be gas-tight except when gauging or sampling is taking place. The same equipment requirements that cover storage losses will at least partially cover working losses.

Table IV-22 presents regulation requirements and limitations of various tank sizes for working losses from gasoline.

TABLE IV-22

HYDROCARBON LIMITATIONS FOR WORKING LOSSES FROM GASOLINE

State	Tank Size (Gallons)	Requirements
Alabama	60,000	pressure vessel or floating roof <11.0 psia, >11.0 psia vapor recovery
Arizona	65,000	pressure vessel or floating roof >2.0 psia
California	>250	submerged fill unless pressure tank, vapor recovery, floating roof
Colorado	40,000	pressure vessel <11.0 psia, >11.0 psia vapor recovery, 1.5 lb/1000 gal
Connecticut	40,000	floating roof, pontoon double deck or vapor recovery not for facilities before 1972
Washington,D.C.	40,000	floating roof, pontoon double deck >1.5 psia <11.0 psia, >11.0 vapor recovery
Hawaii	40,000	pressure vessel or floating roof <11.0 psia, >11.0 psia vapor recovery
Illinois	40,000	floating roof <12.5 psia, >12.5 psia vapor recovery 85%, vapor disposal prevent emissions
Indiana	40,000	floating roof, pontoon double deck if <12.0 psia, >12.0 psia vapor recovery
Kansas	40,000	floating roof, pontoon double deck <13.0 psia, >13.0 psia vapor recovery
Kentucky	40,000	floating roof, pontoon double deck >1.5 psia <11.1 psia, >11.1 psia vapor recovery
Louisiana	40,000	new, floating roof, pontoon double deck <11.0 psia >11.0 psia vapor recovery
Maryland	40,000	floating roof
Massachusetts	250-40,000	submerged fill
Minnesota	65,000	pressure vessel, floating roof >2.5 psia <12.5 psia, >12.5 psia vapor recovery
Nevada	40,000	floating roof double deck >1.5 psia
New Jersey	-	function of tank size and vapor pressure
North Carolina	50,000	floating roof >1.5 psia <11.0 psia, >11.0 psia vapor recovery
Ohio	65,000	floating roof, double deck pontoon, vapor recovery
Oklahoma	-	submerged fill
Oregon	40,000	vapor recovery or equivelent, new
Pennsylvania	40,000	vapor recovery >11.0 psia
Puerto Rico	40,000	vapor recovery >11.0 psia
Rhode Island	40,000	pressure vessel or vapor recovery
Texas	>1,000	submerged fill
Utah	-	floating roof, vapor recovery >1.5 psia
Virginia	40,000	pressure vessel, floating roof, pontoon double deck, 90% efficiency
Wisconsin	40,000	floating roof, pontoon double deck, vapor recovery

Potential Source Compliance and Emissions Limitations: Existing vapor recovery technology is adequate to meet state regulations for storage and working losses of gasoline.

The Environment Reporter was used to update emission limitations.

G. References:

Literature used to develop the information presented in this section is listed below:

(1) Danielson, J. A., Air Pollution Engineering Manuel, Second Edition, AP-40, Research Triangle Park, North Carolina, EPA, May 1973.

(2) Compilation of Air Pollutant Emission Factors (Second Edition), EPA, Publication No. AP-42, March 1975.

(3) Analysis of Final State Implementation Plans - Rules and Regulations, EPA, Contract 68-02-0248, July 1972, Mitre Corporation.

(4) API Bulletin on Evaporation Loss in the Petroleum Industry - Causes and Control, February 1959.

A. Source Category: IV Evaporation Losses

B. Sub Category: Petroleum Transfer Gasoline

C. Source Description:

After leaving the refinery, gasoline is transferred via pipeline, rail, ship or barge to intermediate storage terminals and then to regional marketing terminals for temporary storage in large quantities. The gasoline is then pumped into tank trucks that deliver directly to service stations or to "bulk plants." From "bulk plants" the gasoline is trucked to its final destination, service stations and ultimately motor vehicle fuel tanks. (1)4.4-1

D. Emission Rates:

Transfer losses of gasoline vapor from tank cars and trucks is dependent upon:

1. loading method,
2. ambient temperature,
3. loading rate, and
4. vapor pressure of gasoline.

"Splash" loading is the process of filling a storage tank through a short filler neck where the gasoline impinges upon the surface of the liquid. The subsequent splashing causes excess liquid droplets to become temporarily entrained. As the tank fills, the vapor volume above the liquid level is reduced and the vapors exiting from the vent are completely saturated. "Submerged" loading is the process of filling a storage tank through a filler neck that extends to the bottom of the tank. The resulting surface splashing is greatly reduced because the liquid already in the tank dampens the splashing and excessive movement of the filling liquid. Consequently, the vapor volume above the liquid that is exiting through the vent contains vapors that are less saturated than the equivalent one in "splash" loading. (1)4.4-1,2 Table IV-23 presents hydrocarbon emissions from the transfer of gasoline.

TABLE IV-23

HYDROCARBON EMISSIONS FROM TRANSFER OF GASOLINE (1)4.4-6

Type of Equipment & Control	% Control	Emissions Based on 67,000 bbl Tank			
		lbs/ 10^3 Gal Transferred	kg/ 10^3 Liters Transferred	lbs/ Day	kg/ day
Splash Loading Uncontrolled	0	12.4	1.5	34,900	15,800
Submerged Loading Uncontrolled	67	4.1	.49	11,500	5,200
Unloading Uncontrolled	83	2.1	.25	210*(1)4.3-8	95
Splash Loading, With Vapor Recovery	95	.62	.074	1,700	790
Submerged Loading, With Vapor Recovery	98	.21	.025	580	260
Unloading, With Vapor Recovery	99	.11	.013	11	5

*Assumed 100,000 gal/day transferred.

E. Control Equipment:

"Submerged" loading versus "splash" loading involves the structure of the storage tank rather than a typical "add on" arrangement. There are however four types of vapor recovery methods that are suitable for the collection of petroleum liquid vapors during transfer. These are:(1)4.3-7

1. liquid absorption,
2. vapor compression,
3. vapor condensation, and
4. adsorption in activated charcoal.

In order to control the hydrocarbon vapors that are displaced when filling a storage tank, one of the above systems could be installed on the vent. However, it is not necessary for every storage tank to have such a system available. Instead, a specially designed and constructed delivery truck can dispense petroleum liquids and collect displaced vapor simultaneously. Figure IV-1 presents the process diagram whereby the delivery truck returns to the bulk distribution plant with the vapor the liquid contents replaced. When the tank truck is subsequently filled, a vapor recovery system at the distribution plant will collect the resulting vapors. Overall control efficiency for the vapor-tight tank truck is 93 to 100 percent when compared to uncontrolled "splash" filling.(1)4.4-5

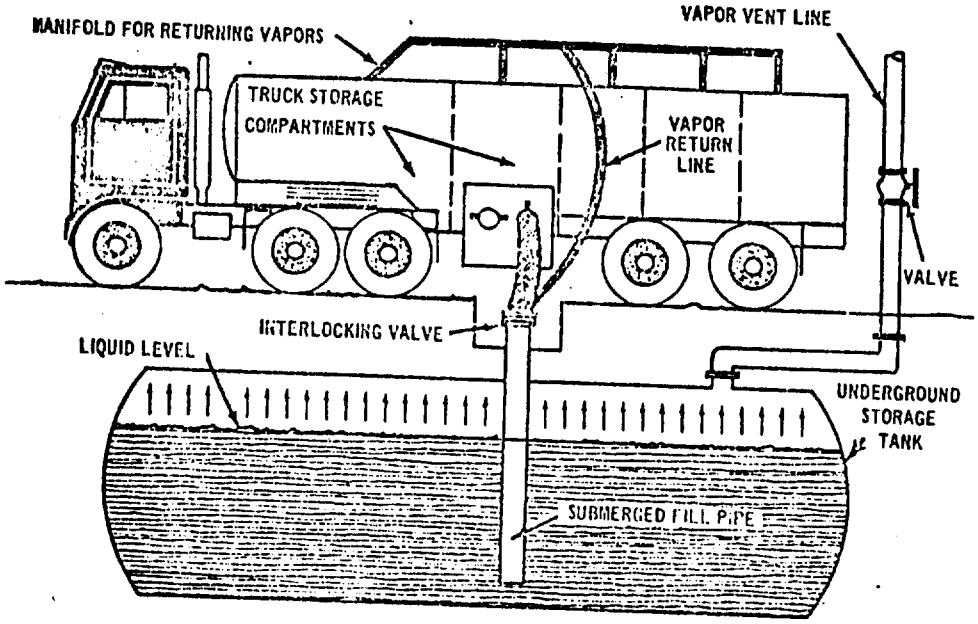

Figure IV-1: Underground Storage Tank, Vapor-Recovery System

F. New Source Performance Standards and Regulation Limitations:

New Source Performance Standards (NSPS): In the Friday, March 8, 1974 Federal Register, EPA promulgated "New Source Performance Standards" for storage vessels for petroleum liquids. The standard applies to tanks greater than 40,000 gallons (151,412 liters) containing petroleum liquids that have a true vapor pressure of 1.5 psia (78 mn Hg). However, this standard does not apply to transfer of gasoline but is directly related because of the specification of the type tank required. As such, the limitation of hydrocarbon emissions from the transfer of gasoline is controlled by individual state regulations.

State Regulations for New and Existing Sources: Many states and local legislatures have regulations covering petroleum transfer. The majority of regulations follow the Appendix B (Federal Register, August 14, 1971). Appendix B requires that loading of volatile organic compounds into any tank, truck or trailer having a capacity in excess of 200 gallons (760 liters) can be from a loading facility equipped with a vapor collection and disposal system. The loading facility can be equipped with a loading arm with a vapor collection adapter, pneumatic, hydraulic or other mechanical means to force a vapor tight seal between the adapter and the hatch. A means can be provided to prevent drainage of liquid organic compounds from the loading device when it is removed from the hatch, thereby accomplishing complete drainage before removal. When loading is effected through means other than hatches, all loading and vapor lines can be equipped with fittings which make vapor tight connections and which close automatically when disconnected. The emission limitation will result in 55 to 60 per cent reduction in volatile emissions from uncontrolled sources in gasoline marketing and other transfer operations.

Table IV-24 presents requirements and limitations of typical states which require control of transfer operations.

TABLE IV-24

HYDROCARBON LIMITATIONS FROM PETROLEUM TRANSFER

State	Throughput gallons/day	Requirement
Alabama	50,000	vapor recovery
Colorado	20,000	vapor recovery, limit 1.24 lbs/1000 gal
Connecticut	10,000	vapor recovery
Washington, D.C.	-	vapor recovery, disposal 90% efficiency
Illinois	40,000	vapor recovery, disposal prevent emissions
Indiana	40,000	vapor tight seal
Louisiana	20,000	vapor recovery, 95% efficiency
Maryland	20,000	floating roof and vapor recovery
Pennsylvania	20,000	vapor recovery
Puerto Rico	20,000	vapor recovery
Texas	20,000	vapor tight seal
Virginia	20,000	vapor recovery

Potential Source Compliance and Emission Limitations: Existing vapor recovery technology is adequate to meet state regulations for transfer of petroleum liquids. The tank and special delivery truck arrangement outlined in Section E is consistent with existing regulations and permits the economy of vapor recovery installation at only the bulk distribution plant.

The Environment Reporter was used to update emission limitations.

G. References:

Literature used to develop the information in this section is listed below:

(1) Compilation of Air Pollutant Emission Factors (Second Edition), EPA, Publication No. AP-42, March 1975.

(2) Analysis of Final State Implementation Plans - Rules and Regulations, EPA, Contract 68-02-0248, July 1972, Mitre Corporation.

References Not Used:

(3) Danielson, J. A., Air Pollution Engineering Manuel (Second Edition), AP-40, Research Triangle Park, North Carolina, EPA, May 1973.

(4) Hydrocarbon Pollutant Systems Study, Volume I - Stationary Sources, Effects, and Control (Final Technical Report), MSA Research Corporation, October 20, 1972.

(5) Control Techniques for Hydrocarbon and Organic Solvent Emissions From Stationary Sources, U.S. Department of Health, Education, and Welfare, National Air Pollution Control, Administration Publication No. AP-68, March 1970.

(6) Schneider, Alan M., Cost Effectiveness of Gasoline Vapor Recovery Systems, For Presentation at the 68th Annual Meeting of the Air Pollution Control Association, Boston, Massachusetts, June 15-20, 1975.

A. Source Category: IV Evaporation Losses

B. Sub Category: Petroleum Service Stations

C. Source Description:

Hydrocarbon emissions from service stations arise primarily from the following operations:

1. filling and emptying losses,
2. breathing losses,
3. filling of vehicle tanks.

Except for automobile refueling which is discussed in another section, the losses arise from the underground tank storage vents. Figure IV-12[4]93 presents a typical uncontrolled service station underground storage tank. Filling losses occur as vapors are expelled from the tank as a result of filling with liquid

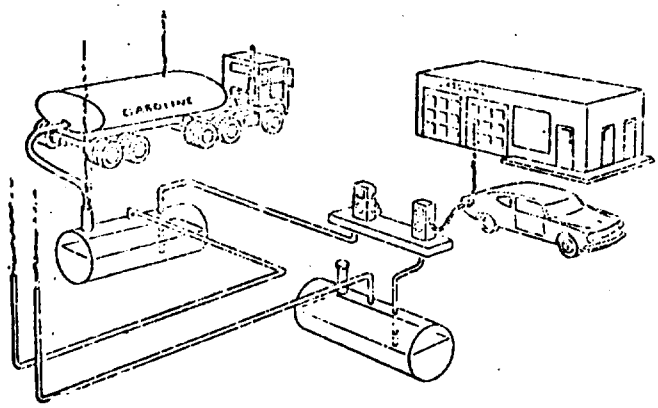

Figure IV-12: Present Uncontrolled Service Station for Underground Tank

gasoline. Losses occur when the vapor space recedes with increasing liquid level. The pressure inside the tank then exceeds the relief pressure. Emptying losses occur because the liquid removed during refueling of vehicles causes a partial vacuum, and ambient air is drawn in through the vent. Enough air enters during withdrawal to maintain atmospheric pressure in the tank. When vaporization into the new air reaches equilibrium, the vapor volume exceeds the capacity of the vapor space. This increase in vapor volume causes the expulsion. Breathing losses occur through underground storage tank vents by thermal expansion of existing vapors, expansion caused by barometric pressure changes, and an increase in the amount of vapor from added vaporization in the absence of liquid level changes.[5]9

D. Emission Rates:

Hydrocarbon emissions from service stations include the vapor displaced from the vehicle tank, the liquid spilled in filling the vehicle tank, the breathing losses of the stored gasoline, and the filling and emptying losses of the underground tank. Table IV-25 presents hydrocarbon emissions from service stations.

TABLE IV-25

HYDROCARBON EMISSIONS FROM SERVICE STATIONS

Type of Operation & Control	% Control	Emissions			
		lbs/ 1000 gal	kg/ 1000 liters	lbs/ Refueling of 6000 gal tank	kg/ Refueling of 23,250 liter tank
Vapor Loss at Vehicle, Uncontrolled	0	11.0[4]4	1.33	66	7.98
Vapor Loss at Vehicle with Equal Volume Balance System	70	3.3 [4]4	.13	19.8	2.34
Spillage at Vehicle, Uncontrolled	0	.7[4]4	.08	4.2	.48
Storage Breathing Loss, Uncontrolled	0	1.0[4]4	.12	6.0	.72
Storage Breathing Loss, with Equal Volume Balance System	90	.10[4]4	.012	.60	.072
Splash Loading, Uncontrolled	0	12.4[1]3	1.5	74.4	9.0
Splash Loading, with Equal Volume Balance System	90	1.24[1]3	.15	7.44	.90
Submerged Loading, Uncontrolled	0	4.1[1]3	.49	24.6	2.94
Submerged Loading, with Equal Volume Balance System	90	.41[1]3	.05	2.46	.30
Unloading, Uncontrolled	0	2.1[1]3	.25	12.6	1.5
Unloading, with Equal Volume Balance System	90	.21[1]3	.03	1.26	.18

E. Control Equipment:

An effective control system for use at a service station underground storage tank must not only reduce emissions from filling, emptying, and breathing losses of the underground tank, but also must be amenable to reduction of vehicle refueling losses.

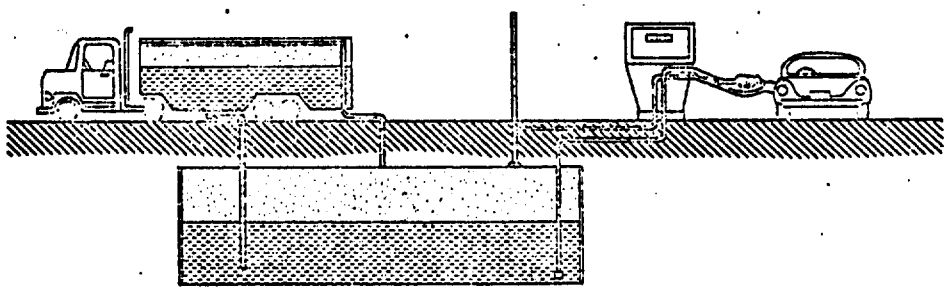

Figure IV-13: Simple Displacement System

Figure IV-13 presents a simple displacement system. This system essentially returns to the underground tank the displaced vapor from the vehicle tank. However, a problem exists with vehicles that have open vented tanks. The tight fitting nozzle causes an increase in pressure in the vehicle tank, thus expelling vapor through the vehicle vent.[4]7

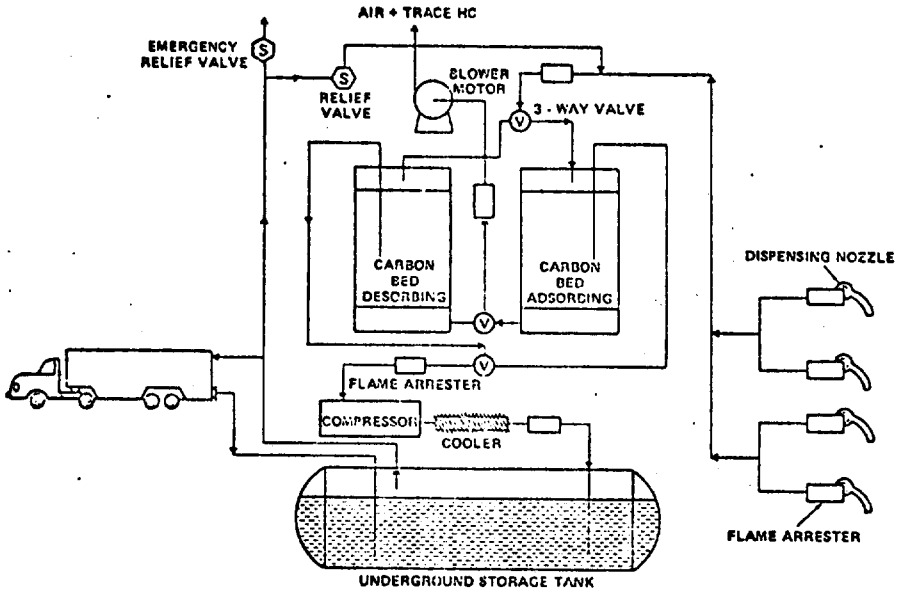

Figure IV-14: On-Site Regeneration System

Figure IV-14 presents an on-site carbon regeneration system. The on-site regeneration system can effectively collect vapor from even vented vehicle tanks and effectively reduces filling, emptying, and breathing losses from the underground tanks. Vapors from the vehicle tank are extracted with the aid of an air pump. These vapors, together with excess vapors from the underground tank, go through one of two canisters which adsorbs the hydrocarbons and expels the air. An electric timer is used to close off one canister after several hours of operation and connects another pump to it, which evacuates this canister to 28" Hg. Electric heaters raise the carbon temperature to 250°F to improve the desorption effect. The vapors are cooled in a heat exchanger and bubbled through the gasoline in the ground tank where they are absorbed. During this time, the second canister adsorbs vapors from the vehicles. The initial adsorption efficiency of 99% decreases to 94%, at which time the carbon is regenerated.(4)10

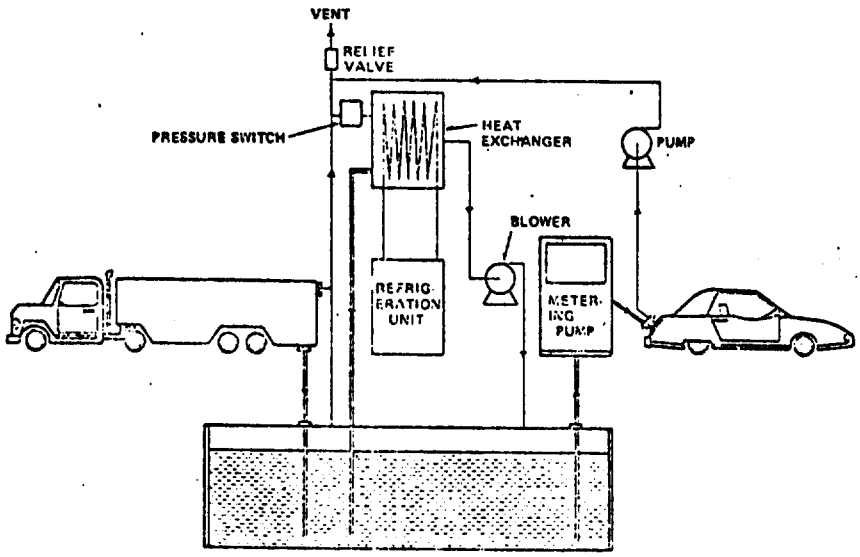

Figure IV-15: Refrigeration System

Two refrigeration systems are under test. The one presented in Figure IV-15 consists of a heat exchanger, a blower with 80 CFM capacity, and a one-ton refrigeration unit. When pressure builds up during the underground tank filling, a pressure activated switch starts the blower and refrigeration system, which reduces the heat exchanger temperature to 40°F. Vapors are pulled through the heat exchanger by the blower, cooled off, and returned to the ground tank. A small amount of gasoline vapor is condensed. This reduces the pressure allowing the unit to shut off. This system has limited effectiveness on warm days when the heat flux into the unit is large. The use of a vapor recovery pump to extract vapors from the vehicle filler neck area further complicates matters.(4)11

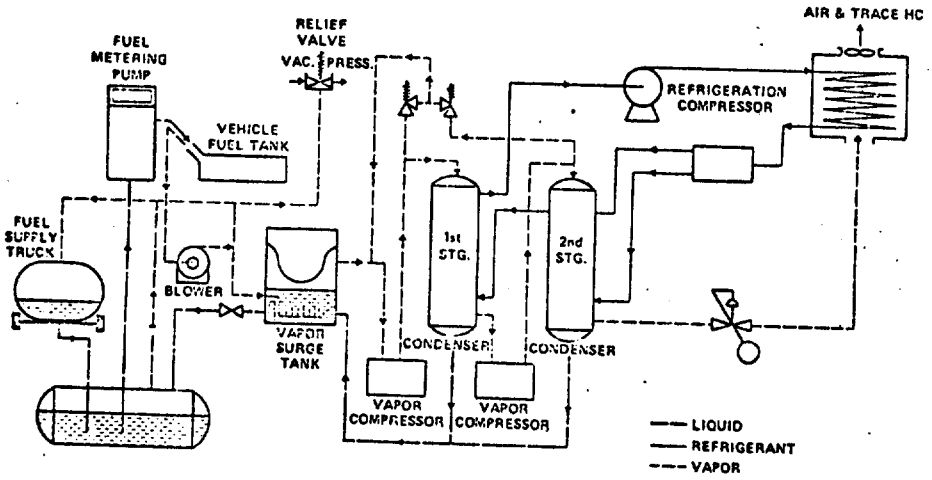

Figure IV-16: Compression Liquification System

Figure IV-16 presents a scaled-down version of a recovery system used commonly at large bulk plants. Excess vapor from the vehicle tank or underground storage tank enters the surge tank through a layer of gasoline which saturates it. The compressor is started when this tank is nearly filled. It compresses the vapor to 82 psi, raising the temperature to 250°F. The vapors are cooled to 35°F in the first heat exchanger. The heavy-end hydrocarbon and all water vapors are condensed. The remaining vapor goes through the second stage of the compressor where the pressure is increased to 425 psi and the temperature reaches 275°F. In the second condenser, an isobaric temperature decrease to 10°F occurs. All hydrocarbons except traces of methane and ethane are condensed. They are returned to the surge tank, and the overflow goes to the ground tank. The refrigeration unit maintains the condensers at their design temperature at all times. It does not cycle on and off with the compressor. Three pre-production models are now being field-tested, two at gas stations in San Diego, and a third at a research center.

F. New Source Performance Standards and Regulation Limitations:

New Source Performance Standards (NSPS): No "New Source Performance Standards" have been promulgated for petroleum losses at service stations.

State Regulations for New and Existing Sources: Several states and local governments specifically regulate the emissions from service station operations. Areas in California and the District of Columbia require 90% control efficiencies. Colorado limits emissions to 1.10 lbs/10^3 gallons delivered. Maryland and Massachusetts require vapor return rules. In addition to the above states, New Jersey, Texas, Virginia, and Wisconsin regulate automobile refueling operations.

Potential Source Compliance and Emission Limitations: Existing technology is adequate to meet the 90% control limitations. A vapor balance or a secondary processing system operating at 90% control efficiency is required and has been accomplished on existing sources.

The Environment Reporter was used to update the emission limitation.

G. Literature used to develop the information in this section, "Petroleum Service Stations," is listed below:

(1) Batcheldar, A. H., Kline, D. I., Vapor Recovery at Service Stations, State of California Air Resources Board, April 1974.

(2) Martens, Stuart W., Control of Refueling Emissions Statement by General Motors Corporation, Vehicle Refueling Emissions Seminar, Sheraton-Anaheim Motor Hotel, Anaheim, California, December 4-5, 1973.

(3) Analysis of Final State Implementation Plans - Rules and Regulations, EPA, Contract 68-02-0248, July 1972, Mitre Corporation.

(4) Hydrocarbon Vapor Control at Gasoline Service Stations, Barnard A. McEntire and Ray Skoff, County of San Diego, California, 66APCA, June 1973.

(5) Vehicle Refueling Emissions Seminar, API Publication 4222, December 1973.

A. Source Category: V Chemical Process Industry

B. Sub Category: Acrylonitrile

C. Source Description

Acrylonitrile, CH_2CHCN, is produced from propylene and ammonia by the Sohio process, which is described by the following reaction:

$$2\ CH_2 = CHCH_3 + 2\ NH_3 + 3\ O_2 \xrightarrow[\text{Heat}]{\text{Catalyst}} 2\ CH_2 = CHCN + 6\ H_2O$$

Vaporized propylene and ammonia (2:1) are mixed with air and steam and introduced into a catalytic reactor which operates at 5-30 psig and 750-950°F (399-510°C). The original catalyst introduced by Sohio was bismuth phosphomolybdate on silica. This has been replaced by the more efficient antimony-uranium oxide system. The reacted product is withdrawn to a countercurrent absorber where organic products are absorbed in water and subsequentially recovered by distillation. The process flow sheet, shown in Figure V-1, illustrates the Sohio process for the manufacture of acrylonitrile.

No alternative raw materials are available for the ammonia and propylene used in this process. Approximately 1,000 lbs (454 kg) ammonia, 2,000 lbs (907 kg) propylene, and 20,000 lbs (9,072 kg) air are required to produce 1 ton (.9 m ton) of acrylonitrile. As the process flow sheet indicates, both hydrogen cyanide and acetonitrile are produced as by-products. Approximately 150 lbs (68.0 kg) of hydrogen cyanide and 30 lbs (13.6 kg) of acetonitrile are produced per ton of acrylonitrile. A typical plant will produce 274 tons (249 m tons) of acrylonitrile per day.

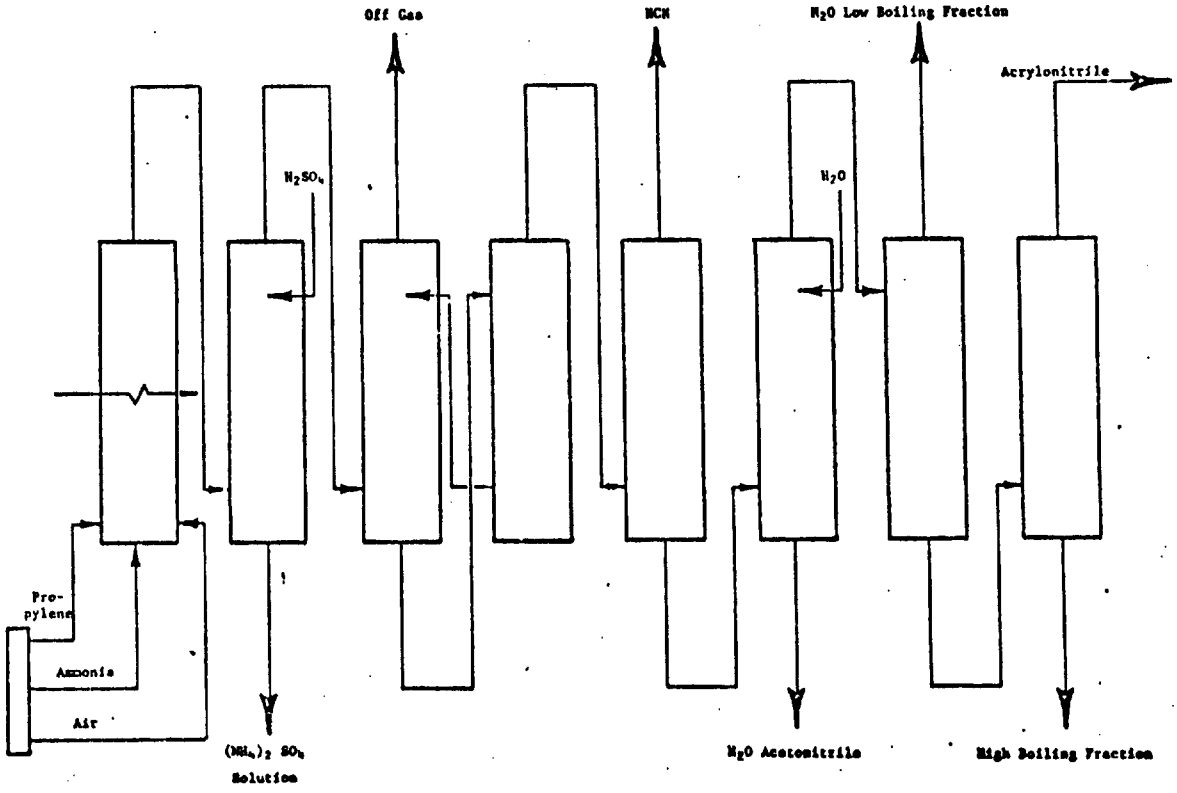

Figure V-1: Sohio Process for Acrylonitrile Manufacture

D. Emission Rates:

Hydrocarbon emissions from the Sohio process originate from the absorber off-gases and from the flare in the reaction section of the process. The hydrocarbon emissions for this uncontrolled and controlled process are shown in Table V-1.(4)9 Various percentages of control were calculated as examples to show how much in reduced emissions is obtained in discrete increments of additional control.

TABLE V-1

HYDROCARBON EMISSIONS FROM ACRYLONITRILE MANUFACTURE

Type of Operation & Control	% Control	Emissions* Based on 274 tons/day			
		lbs/ton	(kg/MT)	lbs/hr	kg/hr
Absorber Off-Gases to Flare, Uncontrolled	0	200	100	2280	1034
Absorber Off-Gases to Flare, with Incinerator	80	40	20	456	207
Absorber Off-Gases to Flare, with Incinerator	85	30	15	342	155
Absorber Off-Gases to Flare, with Incinerator	90	20	10	228	103
Absorber Off-Gases to Flare, with Incinerator	95	10	5	114	52
Absorber Off-Gases to Flare, with Incinerator	99	2	1	23	10

*As methane

E. Control Equipment:

Incineration of the off-gases is an effective means of controlling hydrocarbon emissions from the Sohio process for the manufacture of acrylonitrile. Efficiencies from 80 percent to 100 percent are routinely achieved with incineration.(4)9 Controlled hydrocarbon emissions from the manufacture of acrylonitrile are presented in Table V-1.

F. New Source Performance Standards and Regulation Limitations:

New Source Performance Standards (NSPS): No New Source Performance Standards have been promulgated for acrylonitrile manufacture.

State Regulations for New and Existing Sources: Very few states have adopted hydrocarbon regulations for specific process industries such as acrylonitrile. Currently, hydrocarbon emission regulations are patterned after Los Angeles Rule 66 and Appendix B type legislation. Organic solvent useage is categorized by three basic types. These are, (1) heating of articles by direct flame or baking with any organic solvent, (2) discharge into the atmosphere of photochemically reactive solvents by devices that employ or apply the solvent, (also includes air or heated drying of articles for the first twelve hours after removal from #1 type device) and (3) discharge into the atmosphere of non-photochemically reactive solvents. For the purposes of Rule 66, reactive solvents are defined as solvents of more than 20% by volume of the following:

1. A combination of hydrocarbons, alcohols, aldehydes, esters, ethers or ketones having an olefinic or cyclo-olefinic type of unsaturation: 5 per cent
2. A combination of aromatic compounds with eight or more carbon atoms to the molecule except ethylbenzene: 8 per cent
3. A combination of ethylbenzene, ketones having branched hydrocarbon structures, trichloroethylene or tolune: 20 per cent

Rule 66 limits emissions of hydrocarbons according to the three process types. These limitations are as follows:

Process	lbs/day	& lbs/hour
1. heated process	15	3
2. unheated photochemically reactive	40	8
3. non-photochemically reactive	3000	450

Appendix B (Federal Register, Vol. 36, No. 158 - Saturday, August 14, 1971) limits the emission of photochemically reactive hydrocarbons to 15 lbs/day and 3 lbs/hr. Reactive solvents can be exempted from the regulation if the solvent is less than 20% of the total volume of a water based solvent. Solvents which have shown to be virtually unreactive are, saturated halogenated hydrocarbons, perchloroethylene, benzene, acetone and C_1-C_5 n-paraffins.

For both Appendix B and Rule 66 type legislation, if 85% control has been demonstrated the regulation has been met by the source even if the lbs/day and lbs/hour values have been exceeded. Most states have regulations that limit the emissions from handling and use of organic solvents. Alabama, Connecticut and Ohio have regulations patterned after Los Angeles Rule 66. Indiana and Louisiana have regulations patterned after Appendix B. Some states such as North Carolina have an organic solvent regulation which is patterned after both types of regulations.

Table V-2 presents uncontrolled and controlled emissions and limitations for acrylonitrile manufacture.

TABLE V-2

HYDROCARBON EMISSIONS AND LIMITATIONS FROM ACRYLONITRILE MANUFACTURE

Type of Operation & Control	% Control	Emissions* Based on 274 tons/day		Limitations* lbs/hr/kg/hr			
		lbs/hr	kg/hr	Heated		Unheated	
Absorber Off-Gases to Flare, Uncontrolled	0	2280	1034	3	1.36	8	3.63
Absorber Off-Gases to Flare, Controlled	80	456	207	3	1.36	8	3.63
Absorber Off-Gases to Flare, Controlled	85	342	155	3	1.36	8	3.63
Absorber Off-Gases to Flare, Controlled	90	228	103	3	1.36	8	3.63
Absorber Off-Gases to Flare, Controlled	95	114	52	3	1.36	8	3.63
Absorber Off-Gases to Flare, Controlled	99	23	10	3	1.36	8	3.63

*As methane

Potential Source Compliance and Emission Limitations: Hydrocarbon emission limitations are not based on process weight, and large processes such as acrylonitrile manufacture require tight control to meet limitations. An acrylonitrile process producing 274 tons/day requires 99.9% control to meet the 3 lbs/hr limitation, and 99.6% control to meet the 8 lbs/hr limitation. Existing incineration control technology would be borderline to meet this high control efficiency requirement.

The Environment Reporter was used to update the emission limitations.

G. References:

References used in the preparation of this summary include the following:

1. Air Pollution Survey Production of Seven Petrochemicals (Final Report), MSA Research Corp., EPA Contract No. EHSD 71-12, Modification J, Task I, July 23, 1971.

2. Hedley, W.H., Potential Pollutants from Petrochemical Processes, (Final Report), Monsanto Research Corp., EPA Contract No. 68-02-0226, Task No. 9, December, 1973.

3. Pervier, J.W., Barley, R.C., Field, D.E., Friedman, B.M., Morris, R.B., Schartz, W.A., Survey Reports on Atmospheric Emissions from the Petrochemical Industry, Vol. I, EPA Contract No. 68-02-0255, January, 1974.

4. Analysis of Final State Implementation Plans - Rules and Regulations, EPA, Contract No. 68-02-0248, July, 1972, Mitre Corporation.

5. Organic Compound Emission Control Techniques and Emission Limitation Guidelines (Draft), EPA, Emission Standards and Engineering Division, June, 1974.

Other sources which were reviewed but not used directly to develop this section include:

6. The Chemical Marketing Newspaper, Chemical Profiles, Schnell Publishing Co., Inc., New York.

A. Source Category: V Chemical Process Industry

B. Sub Category: Ammonia (Methanator Plant)

C. Source Description:

Ammonia is produced by catalytic reaction of hydrogen and nitrogen at high temperatures and pressures. A hydrocarbon feed stream (usually natural gas) is desulfurized, mixed with steam, and catalytically reacted to form carbon monoxide and hydrogen. Air is introduced into the secondary reactor to supply oxygen and provide a nitrogen to hydrogen ratio of 1 to 3. The gases enter a two-stage shift converter where the carbon monoxide reacts with water vapor to form carbon dioxide and hydrogen. Unreacted CO is converted to CH_4 by a methanator, and the gas stream is scrubbed to remove carbon dioxide. The gases, mostly nitrogen and hydrogen in a ratio of 1 to 3, are compressed and passed to the converter where they react to form ammonia. An average plant will produce 450 tons of ammonia daily.

The process for the manufacture of ammonia is pictured in the block diagram shown in Figure V-2.

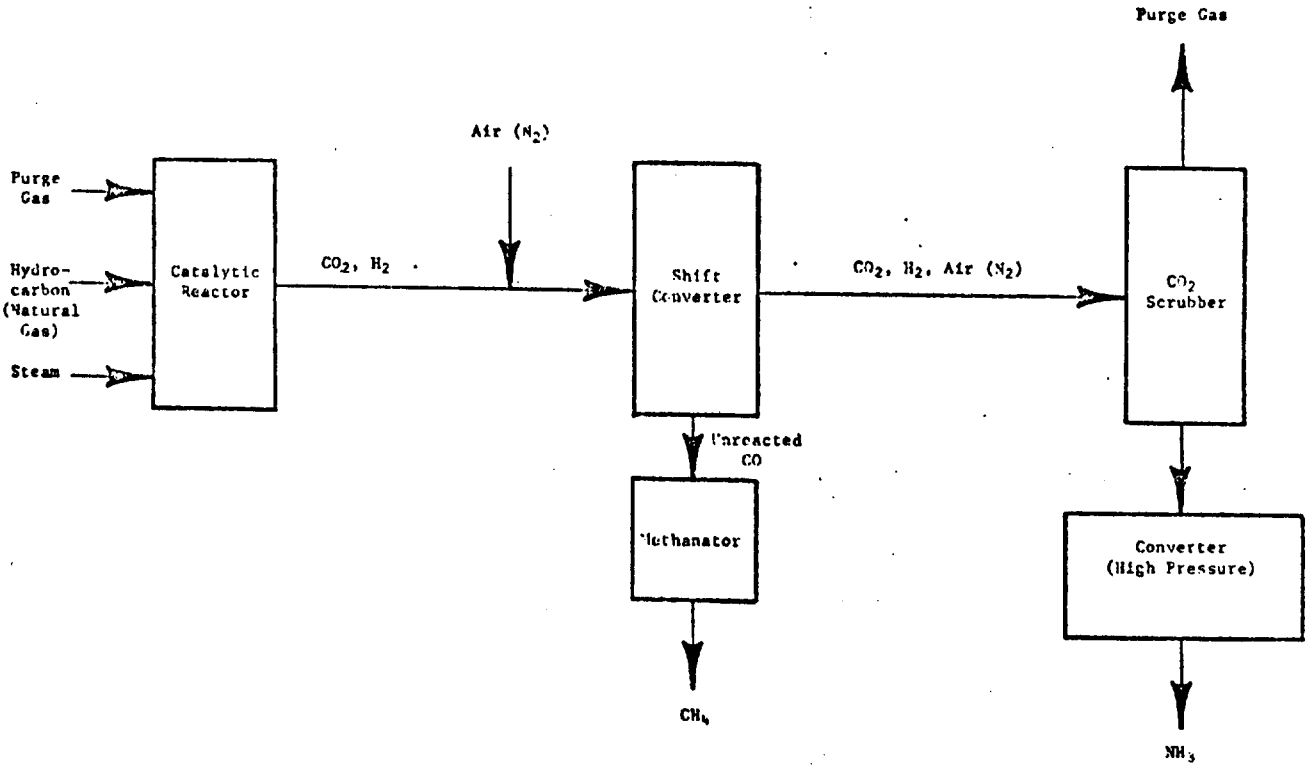

Figure V-2: Ammonia Manufacturing Process (Methanator Plant)

D. Emissions Rates:

The only source of hydrocarbon emissions from ammonia plants using methanators to convert carbon monoxide to methane is the purge gas which is used to prevent the accumulation of inert compounds in the system. The controlled and uncontrolled hydrocarbon emissions from this process are represented in Table V-3.(1)5.2-2 Various percentages of control were calculated as examples to show how much in reduced emissions is obtained in discrete increments of additional control.

TABLE V-3

HYDROCARBON EMISSIONS FROM AMMONIA MANUFACTURE USING A METHANATOR PLANT

Type of Operation and Control	% Control	Emissions* (Based on 450 tons/day)			
		lbs/ton	kg/m ton	lbs/hr	kg/hr
Methanator, Uncontrolled	0	90	45	1690	765
Methanator with Incinerator	80	18	9	338	153
Methanator with Incinerator	85	13.5	6.8	253	115
Methanator with Incinerator	90	9	4.5	169	77
Methanator with Incinerator	95	4.5	2.8	84	38
Methanator with Incienrator	99	.9	.45	17	8

*As Methane

E. Control Equipment:

Collection and incineration of the waste gases from the methanator plant is the chief means of control of hydrocarbon emissions.(2)9 Efficiencies of 80 percent and greater can normally be achieved by incineration.(2)9 Hydrocarbon emissions from methanator ammonia plants with incinerators are presented in Table V-3.

F. New Source Performance Standards and Regulation Limitations:

New Source Performance Standards (NSPS): No New Source Performance Standards have been promulgated for ammonia manufacture using a methanator plant.

State Regulations for New and Existing Sources: Very few states have adopted hydrocarbon regulations for specific process industries such as ammonia manufacture using a methanator plant. Currently, hydrocarbon emmission regulations are patterned after Los Angeles Rule 66 and Appendix B type legislation. Organic solvent useage is categorized by three basic types. These are, (1) heating of articles by direct flame or baking with any organic solvent, (2) discharge into the atmosphere of photochemically reactive solvents by devices that employ or apply the solvent, (also includes air or heated drying of articles for the first twelve hours after removal from #1 type device) and (3) discharge into the atmosphere of non-photochemically reactive solvents. For the purposes of Rule 66, reactive solvents are defined as solvents of more than 20% by volume of the following:

1. A combination of hydrocarbons, alcohols, aldehydes, esters, ethers or ketones having an olefinic or cyclo-olefinic type of unsaturation: 5 per cent
2. A combination of aromatic compounds with eight or more carbon atoms to the molecule except ethylbenzene: 8 per cent
3. A combination of ethylbenzene, ketones having branched hydrocarbon structures, trichloroethylene or tolune: 20 per cent

Rule 66 limits emissions of hydrocarbons according to the three process types. These limitations are as follows:

Process	lbs/day	& lbs/hour
1. heated process	15	3
2. unheated photochemically reactive	40	8
3. non-photochemically reactive	3000	450

Appendix B (Federal Register, Vol. 36, No. 158 - Saturday, August 14, 1971) limits the emission of photochemically reactive hydrocarbons to 15 lbs/day and 3 lbs/hr. Reactive solvents can be exempted from the regulation if the solvent is less than 20% of the total volume of a water based solvent. Solvents which have shown to be virtually unreactive are, saturated halogenated hydrocarbons, perchloroethylene, benzene, acetone and c_1-c_5 n-paraffins.

For both Appendix B and Rule 66 type legislation, if 85% control has been demonstrated the regulation has been met by the source even if the lbs/day and lbs/hour values have been exceeded. Most states have regulations that limit the emissions from handling and use of organic solvents. Alabama, Connecticut and Ohio have regulations patterned after Los Angeles Rule 66. Indiana and Louisiana have regulations patterned after Appendix B. Some states such as North Carolina have an organic solvent regulation which is patterned after both types of regulations.

Table V-4 presents uncontrolled and controlled emissions and limitations for ammonia manufacturing using a methanator plant.

TABLE V-4

HYDROCARBON EMISSIONS AND LIMITATIONS FROM AMMONIA MANUFACTURE USING A METHANATOR PLANT

Type of Operation & Control	% Control	Emissions* (Based on 450 tons/day)		Limitations[3] lbs/hr/kg/hr			
		lbs/hr	kg/hr	Heated		Unheated	
Methanator, Uncontrolled	0	1690	765	3	1.36	8	3.63
Methanator with Incinerator	80	338	153	3	1.36	8	3.63
Methanator with Incinerator	85	253	115	3	1.36	8	3.63
Methanator with Incinerator	90	169	77	3	1.36	8	3.63
Methanator with Incinerator	95	84	38	3	1.36	8	3.63
Methanator with Incinerator	99	17	8	3	1.36	8	3.63

*As Methane

Potential Point Source Compliance and Emission Limitations: Hydrocarbon emission limitations are not based on process weight, and large processes such as ammonia manufacture using a methanator plant require tight control to meet limitations. The ammonia manufacture process using a methanator requires 99.8% control to meet the 3 lbs/hr limitation and 99.5% control to meet the 8 lbs/hr limitation. Existing incinerator technology is borderline for a 450 ton/day ammonia process to be in compliance with existing regulations.

The Environment Reporter was used to update the emission limitations.

G. References:

Literature used to develop the discussion on methanator-using ammonia plants is listed below:

(1) Compilation of Air Pollutant Emission Factors (Second Edition), EPA Publication No. AP-42, April, 1973.

(2) Organic Compound Emission Control Techniques and Emission Limitation Guidelines (Draft), EPA, Emission Standards and Engineering Division, June, 1974.

(3) Analysis of Final State Implemenation Plans--Rules and Regulations, EPA, Contract 68-02-0248, July, 1972, Mitre Corporation.

The following reference was also consulted but not directly used to develop the content of this discussion:

(4) Environmental Control in the Inorganic Chemical Industry, Noyes Data Corporation, 1972, Park Ridge, N.J.

A. Source Category: V. Chemical Process Industry

B. Sub Category: Ammonia (Regenerator & CO Absorber Plant)

C. Source Description:

Ammonia is produced by the catalytic reaction of hydrogen and nitrogen at high temperatures and pressures. A hydrocarbon feed stream (usually natural gas) is desulfurized, mixed with steam, and catalytically reacted to form carbon monoxide and hydrogen. Air is introduced into the secondary reactor to supply oxygen and provide a nitrogen to hydrogen ratio of 1 to 3. The gases enter a two-stage shift converter where the carbon monoxide reacts with water vapor to form carbon dioxide and hydrogen. The gas stream is scrubbed to yield a gas containing less than 1 percent carbon dioxide and then passed through a CO scrubber prior to entering the converter. In the converter, the remaining nitrogen and hdyrogen gases, in a ratio of 1 to 3, are compressed and reacted to form ammonia.

The ammonia manufacturing process is shown in Figure V-3. A typical plant will produce 450 tons per day using this process:

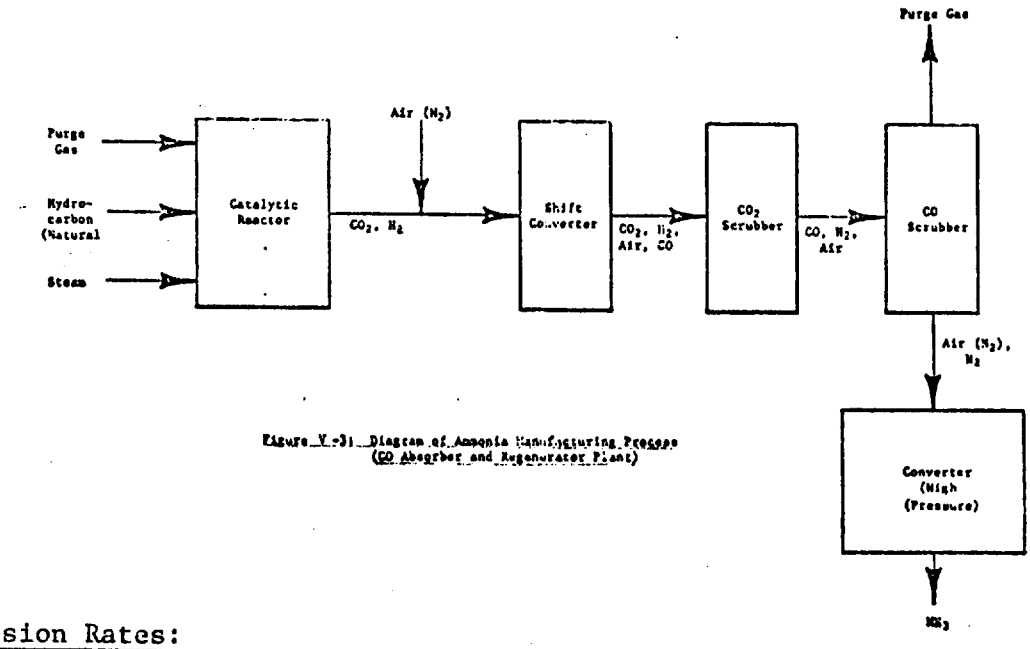

Figure V-3: Diagram of Ammonia Manufacturing Process (CO Absorber and Regenerator Plant)

D. Emission Rates:

The only source of hydrocarbon emissions from ammonia plants with CO absorbers and regeneration systems is the purge gas used to prevent the accumulatation of inert compounds in the system. The controlled and uncontrolled hydrocarbon emissions from these plants are summarized in Table V-5. (1)5.2-2 Various percentages of control were calculated as examples to show how much in reduced emissions is obtained in discrete increments of additional control.

TABLE V-5

HYDROCARBON EMISSIONS FROM AMMONIA MANUFACTURE WITH REGENERATOR & CO PLANT

Type of Operation & Control	% Control	Emissions* Based on 450 tons/day			
		lbs/ on	kg/ m ton	lbs/ hr	kg/ hr
CO Absorber & Regeneration Syst, Uncontrolled	0	90	45	1690	765
CO Absorber & Regeneration Syst with Incineration	80	18	9	338	153
CO Absorber & Regeneration Syst with Incineration	85	13.5	6.8	253	115
CO Absorber & Regeneration Syst with Incineration	90	9	4.5	169	77
CO Absorber & Regeneration Syst with Incineration	95	4.5	2.8	84	38
CO Absorber & Regeneration Syst with Incineration	99	.9	.45	17	8

*As Methane

E. Control Equipment:

Collection and incineration of the purge gas from the plants with CO absorbers and regeneration systems is the chief means of control of the hydrocarbon emissions with efficiencies of 80% and greater.[2)9] Hydrocarbon emissions from plants with CO absorbers and regeneration systems and such control equipment are shown in Table V-5.

F. New Source Performance Standards and Regulation Limitations:

New Source Performance Standards (NSPS): No New Source Performance Standards have been promulgated for ammonia manufacture using a regenerator and CO absorber plant.

State Regulations for New and Existing Sources: Very few states have adopted hydrocarbon regulations for specific process industries such as ammonia manufacture using a regenerator and CO absorber plant. Currently, hydrocarbon emission regulations are patterned after Los Angeles Rule 66 and Appendix B type legislation. Organic solvent useage is categorized by three basic types. These are, (1) heating of articles by direct flame or baking with any organic solvent, (2) discharge into the atmosphere of photochemically reactive solvents by devices that employ or apply the solvent, (also includes air or heated drying of articles for the first twelve hours after removal from #1 type device) and (3) discharge into the atmosphere of non-photochemically reactive solvents. For the purposes of Rule 66, reactive solvents are defined as solvents of more than 20% by volume of the following:

1. A combination of hydrocarbons, alcohols, aldehydes, esters, ethers or ketones having an olefinic or cyclo-olefinic type of unsaturation: 5 per cent
2. A combination of aromatic compounds with eight or more carbon atoms to the molecule except ethylbenzene: 8 per cent
3. A combination of ethylbenzene, ketones having branched hydrocarbon structures, trichloroethylene or tolune: 20 per cent

Rule 66 limits emissions of hydrocarbons according to the three process types. These limitations are as follows:

Process	lbs/day	& lbs/hour
1. heated process	15	3
2. unheated photochemically reactive	40	8
3. non-photochemically reactive	3000	450

Appendix B (Federal Register, Vol. 36, No. 158 - Saturday, August 14, 1971) limits the emission of photochemically reactive hydrocarbons to 15 lbs/day and 3 lbs/hr. Reactive solvents can be exempted from the regulation if the solvent is less than 20% of the total volume of a water based solvent. Solvents which have shown to be virtually unreactive are, saturated halogenated hydrocarbons, perchloroethylene, benzene, acetone and c_1-c_5n-paraffins.

For both Appendix B and Rule 66 type legislation, if 85% control has been demonstrated the regulation has been met by the source even if the lbs/day and lbs/hour values have been exceeded. Most states have regulations that limit the emissions from handling and use of organic solvents. Alabama, Connecticut and Ohio have regulations patterned after Los Angeles Rule 66. Indiana and Louisiana have regulations patterned after Appendix B. Some states such as North Carolina have an organic solvent regulation which is patterned after both types of regulations.

Table V-6 presents uncontrolled and controlled emissions and limitations for ammonia manufacture using a regenerator and CO absorber plant.

TABLE V-6

HYDROCARBON EMISSIONS AND LIMITATIONS FROM AMMONIA MANUFACTURE WITH REGENERATOR AND CO PLANT

Type of Operation and Control	% Control	Emissions *based on 450 tons/day		Limitations[3] lbs/hr/kg/hr			
		lbs/hr	kg/hr	Heated		Unheated	
CO absorber[4] regeneration syst, uncontrolled	0	1690	765	3	1.36	8	3.63
CO absorber[4] regeneration syst, with incineration	80	338	153	3	1.36	8	3.63
CO absorber[4] regeneration syst, with incineration	85	253	115	3	1.36	8	3.63
CO absorber[4] regeneration syst, with incineration	90	169	77	3	1.36	8	3.63
CO absorber[4] regeneration syst, with incineration	95	84	38	3	1.36	8	3.63
CO absorber[4] regeneration	99	17	8	3	1.36	3	3.63

*As Methane

Potential Source Compliance and Emission Limitations: Hydrocarbon emission limitations are not based on process weight, and large processes such as ammonia manufacture using a regenerator and CO absorber plant require tight control to meet limitations. The ammonia process with regenerator and CO absorber plant producing 450 tons/day requires 99.8% control to meet the 3 lbs/hour limitation and 99.5% control to meet the 8 lbs/hour limitation. Existing control technology using incinerators is borderline to meet existing state regulations.

The Environment Reporter was used to update emission limitations.

G. References:

References used as sources of information for the discussion on ammonia plants with CO absorber and regeneration systems include:

(1) Compilation of Air Pollutant Emission Factors (Second Edition). EPA Publication No. AP-42. April, 1973.

(2) Organic Compound Emission Control Techniques and Emission Limitation Guidelines (Draft). EPA, Emission Standards and Engineering Division, June, 1974.

(3) Analysis of Final State Implementation Plans-Rules and Regulations. EPA, Contract 68-02-0248, July, 1972, Mitre Corporation.

The following reference was also consulted but not directly used to develop the material discussed in this section:

(4) Jones, H.R. Environmental Control in the Inorganic Chemical Industry. Park Ridge, New Jersey, Noyes Data Corporation, 1972.

A. Source Category: V. Chemical Process Industry

B. Sub Category: Carbon Black

C. Source Description:

Carbon black, frequently referred to as black, is ultrafine soot produced by the reaction of a hydrocarbon fuel such as oil or gas, or both, with a limited supply of air at temperatures of 2500 to 3000°F (1370 to 1650°C). Part of the fuel is burned to CO_2, CO, and water, thus generating heat for the combustion of fresh feed. The unburned carbon is collected as a black, fluffy particle.

Three basic processes are used in the United States for producing this material. These include:

1. Furnace Process, 91.5 percent of total U.S. production.
2. Channel Process, 0.1 percent of total U.S. production.
3. Thermal Process, 8.4 percent of total U.S. production.

Regardless of the process used, three steps are fundamental to the production of carbon blacks according to the following:

1. Production of black from feed stock.
2. Separation of black from the gas stream.
3. Final conversion of the black to a marketable product.

In the channel process, natural gas is burned with a limited air supply in long, low buildings. The flame from this burning impinges on long steel channel sections that swing continuously over the flame. Carbon black is deposited on the channels and scraped off into collecting hoppers. The black is conveyed to a processing area where grit is removed, lumps are broken into small particles, and the product is pelletized for packaging. Figure V-4 shows the flow diagram for the channel process.

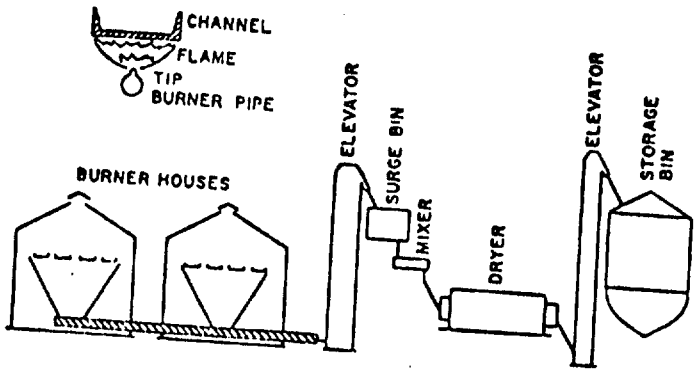

Figure V-4: Flow Diagram of Channel Process

The furnace process may be either an oil or a gas process depending on the primary fuel used to produce the carbon black. In either case, the fuel is in-

jected into a reactor with a limited supply of combustion air. The furnace flue gases carry the hot carbon to a water spray which reduces the temperature of the gases to 500°F (260°C). Agglomeration and collection of the fine carbon black particles is accompiished with an electrostatic precipitator, a cyclone and a fabric filter system in series. Gases are discharged through the stack of the final collector directly to the atmosphere and the black is carried to the finishing area by conveyors and processed for packaging. Figure V-5 and V-6 show a flow diagram for the oil and gas furnace processes, respectively. They are essentially the same except for the different fuels and different furnace designs.

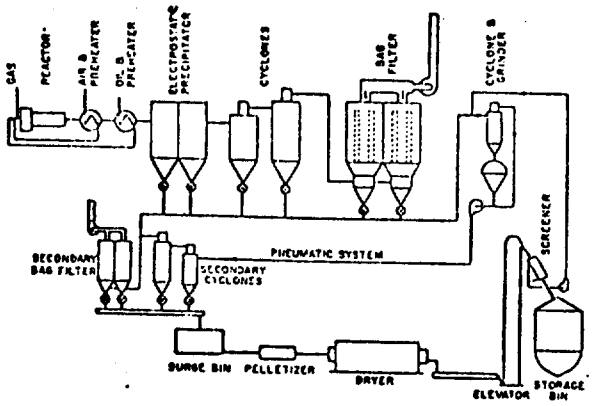

Figure V-5: Flow Diagram of Oil-Furnace Process[1]

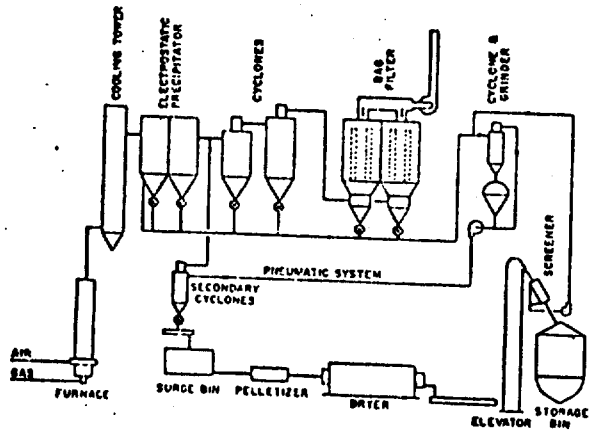

Figure V-6: Flow Diagram of Gas-Furnace Process[1]

In the thermal black process, natural gas is decomposed by heat in the absence of air or flame. Cracking units, coolers, carbon collectors, and packaging devices are the main components of the thermal black plant. In this cyclic process, methane (natural gas) is pyrolyzed or decomposed by passing it over a heated brick checkerwork at a temperature of 3000°F (1650°C). The decomposition reaction produces a smoke of thermal carbon plus quantities of hydrogen. The bricks cool, the carbon smoke is flushed out and carried into a series of cyclones, cooling towers, and fabric filter collectors by the spent gas from the generator. The collected black is transported by screw conveyors to the processing area. Figure V-7 shows a flow diagram of a thermal black process.

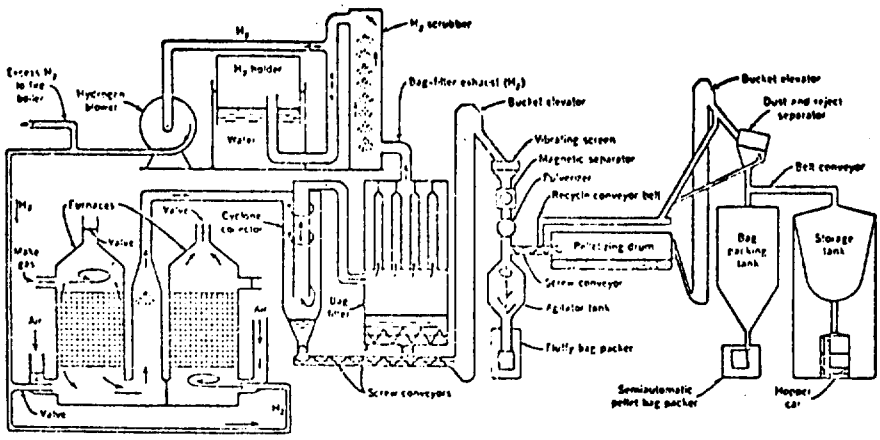

Figure V-7 - Flow Diagram of Thermal Process[1]

A typical carbon black plant will produce 50,000 tons of product annually.

D. Emission Rates:

The discharge of gases directly from the burner house of the channel process, and from the final collection device in the furnace process, releases large quantities of hydrocarbons to the atmosphere. Because of the recycling of the spent gases in the thermal process, there are essentially no emissions of hydrocarbons to the atmosphere. Table V-7([1])[5.3-1] presents controlled and uncontrolled hydrocarbon emissions from carbon black manufacturing. Various percentages of control were calculated as examples to show how much in reduced emissions is obtained in discrete increments of additional control.

TABLE V-7

HYDROCARBON EMISSIONS FROM CARBON BLACK MANUFACTURING

Type of Operation & Control	% Control	Emissions* Based on 50,000 tons/yr (13 tons/day)			
		lbs/ton	kg/m ton	lbs/hr	kg/hr
Channel Process Uncontrolled	0	11,500	5,750	65,550	29,700
Channel Process with Incinerator	85	1,725	863	9,832	4,460
Channel Process with Incinerator	95	575	288	3,277	1,490
Channel Process with Incinerator	99	115	58	656	300
Furnace Process, Oil, Uncontrolled	0	400	200	2,280	1,030
Furnace Process, Oil, with Incinerator	85	60	30	342	155
Furnace Process, Oil, with Incinerator	95	20	10	114	52
Furnace Process, Oil, with Incinerator	99	4	2	22.8	10.4
Furnace Process, Gas, Uncontrolled	0	1,800	900	10,260	4,650
Furnace Process, Gas, with Incinerator	85	270	135	1,540	700
Furnace Process, Gas, with Incinerator	95	90	45	513	230
Furnace Process, Gas, with Incinerator	99	18	9	103	47
Thermal		Negligible		-	-

*As methane

E. Control Equipment:

Gaseous emissions of hydrocarbons from carbon black processes are controlled by flares, incinerators, and CO boilers.([1])5.3-1 However, 80-100 percent of the hydrocarbons could be controlled by collection and incineration of the waste gases. ([3])9 Table V-7 presents controlled emission levels for the channel and furnace processes. Many plants burn the off-gas to comply with CO regulations, which also destroys the hydrocarbons.

F. New Source Performance Standards and Regulation Limitations:

New Source Performance Standards (NSPS): No "New Source Performance Standards" have been promulgated for carbon black manufacture.

State Regulations for New and Existing Sources: Very few states have adopted hydrocarbon regulations for specific process industries, such as carbon black production. Currently, hydrocarbon emission regulations are patterned after Los Angeles Rule 66 and Appendix B type legislation. Organic solvent useage is categorized by three basic types. These are, (1) heating of articles by direct flame or baking with any organic solvent, (2) discharge into the atmosphere of photochemically reactive solvents by devices that employ or apply the solvent, (also includes air or heated drying of articles for the first twelve hours after removal from #1 type device) and (3) discharge into the atmosphere of non-photochemically reactive solvents. For the purposes of Rule 66, reactive solvents are defined as solvents of more than 20% by volume of the following:

1. A combination of hydrocarbons, alcohols, aldehydes, esters, ethers or ketones having an olefinic or cyclo-olefinic type of unsaturation: 5 per cent
2. A combination of aromatic compounds with eight or more carbon atoms to the molecule except ethylbenzene: 8 per cent
3. A combination of ethylbenzene, ketones having branched hydrocarbon structures, trichloroethylene or tolune: 20 per cent

Rule 66 limits emissions of hydrocarbons according to the three process types. These limitations are as follows:

Process	lbs/day	& lbs/hour
1. heated process	15	3
2. unheated photochemically reactive	40	8
3. non-photochemically reactive	3000	450

Appendix B (Federal Register, Vol. 36, No. 158 - Saturday, August 14, 1971) limits the emission of photochemically reactive hydrocarbons to 15 lbs/day and 3 lbs/hr. Reactive solvents can be exempted from the regulation if the solvent is less than 20% of the total volume of a water based solvent. Solvents which have shown to be virtually unreactive are, saturated halogenated hydrocarbons, perchloroethylene, benzene, acetone and c_1-c_5n-paraffins.

For both Appendix B and Rule 66 type legislation, if 85% control has been demonstrated the regulation has been met by the source even if the lbs/day and lbs/hour values have been exceeded. Most states have regulations that limit the emissions from handling and use of organic solvents. Alabama, Connecticut and Ohio have regulations patterned after Los Angeles Rule 66. Indiana and Louisiana have regulations patterned after Appendix B. Some states such as North Carolina have an organic solvent regulation which is patterned after both types of regulations.

Table V-8 presents uncontrolled and controlled emissions and limitations from carbon black manufacture.

TABLE V-8

HYDROCARBON EMISSIONS AND LIMITATIONS FROM CARBON BLACK MANUFACTURING

Type of Operation & Control	% Control	Emissions* Based on 50,000 tons/hr (13 tons/day)		Limitations* lbs/hr/kg/hr			
		lbs/hr	kg/hr	Heated		Unheated	
Channel Process Uncontrolled	0	65,550	29,700	3	1.4	8	3.6
Channel Process with Incinerator	85	9,832	4,460	3	1.4	8	3.6
Channel Process with Incinerator	95	3,277	1,490	3	1.4	8	3.6
Channel Process with Incinerator	99	656	300	3	1.4	8	3.6
Furnace Process, Oil, Uncontrolled	0	2,280	1,030	3	1.4	8	3.6
Furnace Process, Oil, with Incinerator	85	342	155	3	1.4	8	3.6
Furnace Process, Oil, with Incinerator	95	114	52	3	1.4	8	3.6
Furnace Process, Oil, with Incinerator	99	22.8	10.4	3	1.4	8	3.6
Furnace Process, Gas, Uncontrolled	0	10,260	4,650	3	1.4	8	3.6
Furnace Process, Gas, with Incinerator	85	1,540	700	3	1.4	8	3.6
Furnace Process, Gas, with Incinerator	95	513	230	3	1.4	8	3.6
Furnace Process, Gas, with Incinerator	99	103	47	3	1.4	8	3.6
Thermal		-	-				

*As methane

Potential Source Compliance and Emission Limitations: Hydrocarbon emission limitations are not based on process weight, and large processes such as carbon black manufacturing require tight control to meet limitations. The "Thermal Process" is the only carbon black manufacturing process that can meet existing regulations. The "Channel Process" and the "Furnace Process" based on a 50,000 ton/year production are not amenable to existing control technology to reduce emissions to within allowable limits.

The Environment Reporter was used to update the emission limitations.

G. References:

The key sources of information used to develop this section are:

(1) Compilation of Air Pollutant Emission Factors (Second Edition), EPA, April, 1973.

(2) Particulate Pollutant System Study, Vol. III--Handbook of Emission Properties, Midwest Research Institute, EPA Contract No. CPA 22-69-104, May 1, 1971.

(3) Organic Compound Emission Control Techniques and Emission Limitation Guidelines (Draft), EPA, Emission Standards and Engineering Division, June, 1974.

(4) Analysis of Final State Implementation Plans - Rules and Regulations, EPA, Contract 68-02-0248, July, 1972, Mitre Corporation.

Also consulted but not used to directly develop this section were:

(5) A Manual of Electrostatic Precipitator Technology, Part II-Application Areas, Southern Research Institute, Contract No. CPA 22-69-73, August 25, 1970.

(6) Background Information for Stationary Source Categories, Provided by EPA, Joseph J. Sableski, Chief, Industrial Survey Section, Industrial Studies Branch, November 3, 1972.

A. Source Category: V Chemical Process Industry

B. Sub Category: Charcoal

C. Source Description:

Charcoal is produced by pyrolysis, or destructive distillation of hardwood in an enclosed retort. The wood is placed in the retort and heated externally for about 20 hours at 500° to 700°F (260° to 370°C). The retort has air intakes at the bottom, but their use is limited to the start-up period. The entire cycle takes 3 hours to 24 hours, the last four being an exothermic reaction. Approximately four units of hardwood are required to produce one unit of charcoal.

D. Emission Rates:

During pyrolysis of the hardwood, most of the gases, tars, oils, acids, and water from the wood are driven off. The tars, oils, and acids are useful by-products, but economics has made recovery unprofitable, so all these materials are discharged to the atmosphere.

Table V-9 presents particulate and hydrocarbon emissions for plants with and without a recovery plant, based on an assumed retort capacity of 5 tons. (1)5.4-1 This is based on average national emissions. National emissions are calculated using 64% capacity from Missouri-type furnaces and 36% capacity from retort furnaces.

TABLE V-9

PARTICULATE AND HYDROCARBON EMISSIONS FROM CHARCOAL MANUFACTURING

Type of Operation & Control	Particulate Emissions					Hydrocarbon Emissions*				
	% Control	lbs/ ton	kg/ M ton	lbs/ hr	kg/ hr	% Control	lbs/ ton	kg/ M ton	lbs/ hr	kg/ hr
Pyrolysis Without Recovery Plant	0	489	245	101	45	0	484	242	100	45
Pyrolysis With Recovery Plant and Afterburner	99	4.9	2.4	1.0	0.5	99	4.8	2.4	1.0	0.5

*As Methane

E. Control Equipment:

Hydrocarbon emissions are controlled with an afterburner since unrecovered by-products are combustible. Combustion of these gases for plant fuel controls hydrocarbon emissions effectively. Either the burning of these gases as fuel, or combustion in an afterburner, reduces the emissions to negligible quantities.(1)5.4-1 Flares can also be used to reduce the hydrocarbon emissions.

F. New Source Performance Standards and Regulation Limitations:

New Source Performance Standards (NSPS): No New Source Performance Standards have been promulgated for charcoal manufacture.

State Regulations for New and Existing Sources: Very few states have adopted hydrocarbon regulations for specific process industries such as charcoal manufacture. Currently, hydrocarbon emission regulations are patterned after Los Angeles Rule 66 and Appendix B type legislation. Organic solvent useage is categorized by three basic types. These are, (1) heating of articles by direct flame or baking with any organic solvent, (2) discharge into the atmosphere of photochemically reactive solvents by devices that employ or apply the solvent, (also includes air or heated drying of articles for the first twelve hours after removal from #1 type device) and (3) discharge into the atmosphere of non-photochemically reactive solvents. For the purposes of Rule 66, reactive solvents are defined as solvents of more than 20% by volume of the following:

1. A combination of hydrocarbons, alcohols, aldehydes, esters, ethers or ketones having an olefinic or cyclo-olefinic type of unsaturation: 5 per cent
2. A combination of aromatic compounds with eight or more carbon atoms to the molecule except ethylbenzene: 8 per cent
3. A combination of ethylbenzene, ketones having branched hydrocarbon structures, trichloroethylene or tolune: 20 per cent

Rule 66 limits emissions of hydrocarbons according to the three process types. These limitations are as follows:

Process	lbs/day	& lbs/hour
1. heated process	15	3
2. unheated photochemically reactive	40	8
3. non-photochemically reactive	3000	450

Appendix B (Federal Register, Vol. 36, No. 158 - Saturday, August 14, 1971) limits the emission of photochemically reactive hydrocarbons to 15 lbs/day and 3 lbs/hr. Reactive solvents can be exempted from the regulation if the solvent is less than 20% of the total volume of a water based solvent. Solvents which have shown to be virtually unreactive are, saturated halogenated hydrocarbons, perchloroethylene, benzene, acetone and c_1-c_5n-paraffins.

For both Appendix B and Rule 66 type legislation, if 85% control has been demonstrated the regulation has been met by the source even if the lbs/day and lbs/hour values have been exceeded. Most states have regulations that limit the emissions from handling and use of organic solvents. Alabama, Connecticut and Ohio have regulations patterned after Los Angeles Rule 66. Indiana and Louisiana have regulations patterned after Appendix B. Some states such as North Carolina have an organic solvent regulation which is patterned after both types of regulations.

Particulate State Regulations for New and Existing Sources: Particulate emission regulations for varying process weight rates are expressed differently from state to state. There are four regulations that are applicable to charcoal manufacture. The four types of regulations are based on:

1. concentration,
2. control efficiency,
3. gas volume, and
4. process weight.

Concentration Basis: Alaska, Delaware and Washington are representative of states that express particulate emission limitations in terms of grains/standard cubic foot and grains/dry standard cubic foot for general processes. The limitations for these three states are:

Alaska	-	0.05 grains/standard cubic foot
Delaware	-	0.20 grains/standard cubic foot
Washington	-	0.20 grains/dry standard cubic foot
Washington	-	0.10 grains/dry standard cubic foot (new)

Control Efficiency Basis: Utah requires general process industries to maintain 85% control efficiency over the uncontrolled emissions.

Gas Volume Basis: Texas expresses particulate limitations in terms of pounds/hour for specific stack flow rates expressed in actual cubic feet per minute. The Texas limitations for particulates are as follows:

1	-	10,000 acfm	-	9.10 lbs/hr
10,000	-	100,000 acfm	-	38.00 lbs/hr
10^5	-	10^6 acfm	-	158.6 lbs/hr

Process Weight Rate Basis for New Sources: The majority of states express particulate process limitations in terms of pounds per hour as a function of a specific process weight rate. For new sources with a process weight of 500 lbs/hr, the particulate emission limitations range from the most restrictive, 0.89 lbs/hr (0.40 kg/hr) for Massachusetts, to the least restrictive, 1.53 lbs/hr (0.70 kg/hr) for New Hampshire.

Process Weight Rate Basis for Existing Sources: The majority of states express general process limitations for particulate emissions in lbs/hr for a wide range of process weight rates. For a process weight rate of 500 lbs/hour, New York is representative of a most restrictive limitation, 1.4 lbs/hr (0.6 kg/hr) and New Jersey is representative of a less restrictive limitation, 5.5 lbs/hr (2.5 kg/hr).

Process Weight Rate for Specific Sources: Pennsylvania has a particulate emission regulation specifically for charcoal manufacture. The limitation is determined by substitution into $A=0.76E^{0.42}$ where $E=F\times W$. F is determined from Pennsylvania's Table 1 and is 400 lbs/ton of charcoal. W is the process weight, which in this case was 500 lbs/hour. This results with an allowable emission of 5.3 lbs/hour.

Table V-10 presents controlled and uncontrolled hydrocarbon emissions and limitations for charcoal manufacture.

TABLE V-10

PARTICULATE AND HYDROCARBON EMISSIONS AND LIMITATIONS FROM CHARCOAL MANUFACTURE

Type of Operation & Control	% Control	Particulate Emissions (Based on 5-Ton Retort) lbs/hr	kg/hr	Hydrocarbon Emissions (Based on 5-Ton Retort) lbs/hr	kg/hr	Limitations lbs/hr / kg/hr — General Processes — Particulate MA	NJ	Penn.	UT 85% Control	Hydrocarbon Heated		Unheated	
Pyrolysis Without Recovery Plant	0	101	45	100	45	.9/.4	5.5/2.5	5.3/2.4	12.5/6.3	3	1.4	8	3.6
Pyrolysis With Recovery Plant and Afterburner	99	1.0	0.5	1.0	0.5	.9/.4	5.5/2.5	5.3/2.4	12.5/6.3	3	1.4	8	3.6

Potential Source Compliance and Emission Limitation: Charcoal manufacture using a 5-ton retort would require an afterburner to comply with even the least restrictive limitations.

The Environment Reporter was used to update emission regulations.

G. References:

Literature used in the development of the information in this section on charcoal is listed below.

1. Compilation of Air Pollutant Emission Factors, Second Edition, EPA, Pub. No. AP-42, April 1973.

2. "Control Techniques for Hydrocarbon and Organic Solvent Emissions from Stationary Sources," U.S. Department of Health, Education, and Welfare, National Air Pollution Control Administration Publication No. AP-68, March 1970.

3. Priorization of Air Pollution from Industrial Surface Coating Operations, Monsanto Research Corporation, Contract No. 68-02-0320, February 1975.

References consulted but not directly used to develop this section include:

4. Particulate Pollutant System Study, Volume III - Handbook of Emission Properties, Midwest Research Institute, EPA, Contract No. CPA 22-69-104, May 1, 1971.

5. "Control Techniques for Particulate Pollutants," EPA, Office of Air Programs Publications No. AP-51, January 1969.

A. Source Category: V Chemical Process Industry

B. Sub Category: Ethylene Dichloride

C. Source Description:

Two processes are used for the production of ethylene dichloride. One is the direct chlorination of ethylene with chlorine; the other is an oxychlorination process in which ethylene, hydrogen chloride, and oxygen react to form the same product.

In the direct chlorination process, ethylene dichloride is produced by combining ethylene and chloride as described by the following reaction:

$$C_2H_4 + Cl_2 \rightarrow C_2H_4Cl_2$$

Chlorine and ethylene are fed into a reactor where the reaction takes place under 100-120°F (38-49°C) and 10-20 PSIG. Crude ethylene dichloride emerges from the reactor in liquid form and is purified by passage through a series of condensers, separators, and wash towers as shown in the process flow diagram in Figure V-8.(1)EDC-2

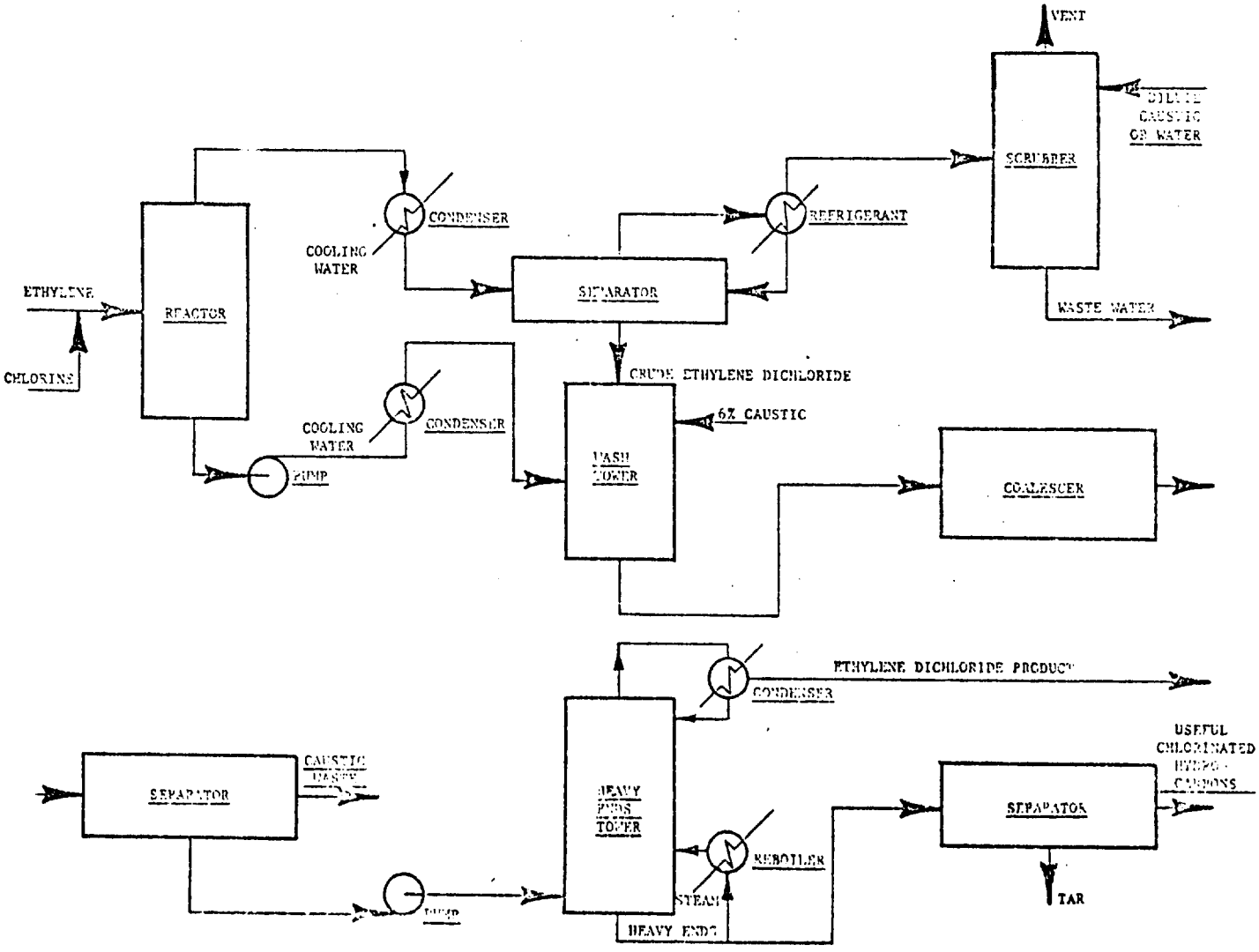

Figure V-8: Direct Chlorination Flow Sheet

In the oxychlorination process, ethylene, oxygen, and hydrochloric acid are fed to a fixed or fluid bed reactor where the following reaction takes place:

$$C_2H_4 + 2HCl + \tfrac{1}{2}O_2 \rightarrow C_2H_4Cl_2 + H_2O$$

Crude ethylene dichloride is absorbed from the gas stream and the non-condensible gases are vented to the atmosphere. The crude product is refined in a fin-ishing system such as the one shown by the flow diagram in Figure V-9[2] Ethylene Dichloride Flow Diagram.

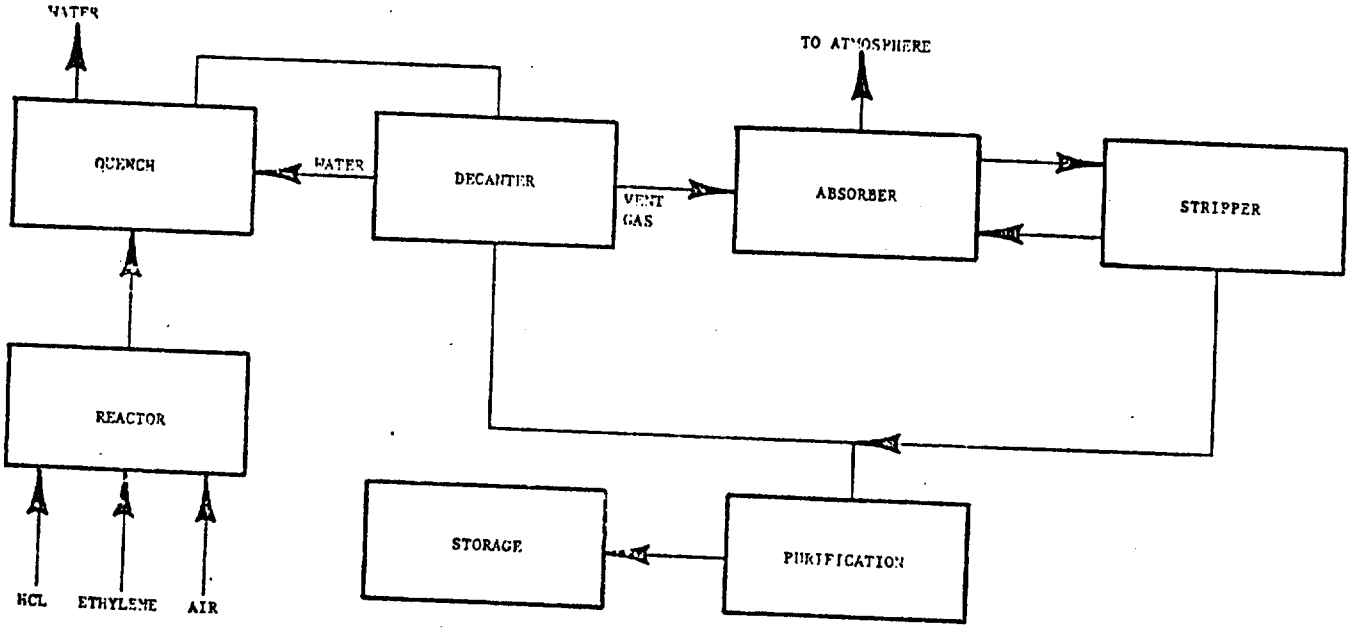

Figure V-9: Ethylene Dichloride Flow Diagram

Almost all production centers around large plants using a balanced combination of these two processes. Such plants use the hydrogen chloride recovered when ethylene dichloride is dehydrohalogenated as feed to the oxychlorination reactor. The annual production of a typical plant is 208,000 tons.

D. Emission Rates:

The quantity of hydrocarbons released to the atmosphere is considerably lower for the direct chlorination process than for the oxychlorination process. The major source of emissions from the direct chlorination processes is the gas vented from the scrubbing column. This gas stream contains small amounts of ethylene, ethylene dichloride, vinyl chloride, and impurities in the feed. The vent gas from the oxychlorination process is also a key source of atmospheric emissions. In both cases, emission rates may vary due to significant differences in product recovery systems. Ethylene dichloride may also be released by storage tanks. Controlled and uncontrolled hydrocarbon emissions from typical ethylene dichloride plants are presented in Table V-11.(1)EDC-3, (2) 2, (3) 9

TABLE V-11

HYDROCARBON EMISSIONS FROM ETHYLENE DICHLORIDE MANUFACTURE

Type of Equipment & Control	% Control	Hydrocarbon Emissions (Based on 24 tons/hr)			
		lbs/ Ton of Product	kg/ M Ton of Product	lbs/ hr	kg/ hr
Direct Chlorination with Incineration of Vent Gases	0	5-8	2.5-4	119-190	60-95
	80	1-1.6	.5-.8	24-38	12-19
	90	.5-.8	.3-.4	12-19	6-9.5
	99	.05-.08	.03-.04	1.2-1.9	.6-1
Oxychlorination with Incineration of Vent Gases	0	50-140	25-70	1190-3330	600-1670
	80	10-28	5-14	240-660	119-330
	90	5-14	2.5-7	119-333	60-167
	99	.05-1.4	.25-.7	12-33	6-16.6
Storage	0	1.2	.6	28.6	14.3

E. Control Equipment:

No emission control for the ethylene dichloride industry has been demonstrated.(2) The producers of this chemical use various methods of product recovery and the emissions from each process are different. Possible hydrocarbon emission control devices would include thermal or catalytic incineration, having control efficiencies approaching 100 percent. Table V-11 presents emission rates that could be attained with incineration of vent gases.

F. New Source Performance Standards and Regulation Limitations:

New Source Performance Standards (NSPS): No "New Source Performance Standards" have been promulgated for ethylene dichloride manufacture.

State Regulations for New and Existing Sources: Many states regulate emissions from ethylene producing plants or other ethylene sources. Alabama, Connecticut, Ohio, Pennsylvania, Puerto Rico, Texas, and Virginia are representative of states that have specific regulations for waste gas disposal. These regulations are similar to those specified in Appendix B (Federal Register, August 14, 1971). Appendix B states that any waste gas stream containing organic compounds from any ethylene producing plant or other ethylene emission source can be burned at 1300^{0}F for 0.3 seconds or greater in a direct-flame afterburner or an equally effective device. This

does not apply to emergency reliefs and vapor blowdown systems. The emission of organic compounds from a vapor blowdown system or emergency relief can be burned by a smokeless flare, or an equally effective control device. This emission limitation will reduce organic compound emissions approximately 98%.

Potential Source Compliance and Emission Limitations: Hydrocarbon emission limitations are not based on process weight, and large processes such as ethylene dichloride manufacture require tight control to meet limitations. The use of afterburners for incineration will meet the limitations specified in Appendix B, .

The Environment Reporter was used to update emission limitations.

G. References:

The references used to develop the content of the discussion on dichloroethylene are listed below:

(1) Pervier, V.W., Barley, R.C., Field, D.E., Friedman, B.M., Morris, R.B., and Schwartz, W.A., Survey Reports on Atmospheric Emissions from the Petrochemical Industry, Volume II, Air Products and Chemicals, Inc., EPA Contract No. 68-02-0255, April, 1974.

(2) Background Information for Stationary Source Categories, Provided by EPA, Joseph J. Sableski, Chief, Industrial Survey Section, Industrial Studies Branch, November 3, 1972.

(3) Organic Compound Emission Control Techniques and Emission Limitation Guidelines (Draft), EPA, Emission Standards and Engineering Division, June, 1974.

(4) Analysis of Final State Implementation Plans -- Rules and Regulations, EPA, Contract 68-02-0248, July, 1972, Mitre Corporation.

One reference was consulted but not used to develop this section:

(1) Control Techniques for Hydrocarbon and Organic Solvent Emissions from Stationary Sources, U.S. Department of Health, Education, and Welfare, Natioanl Air Pollution Control Administration Publication No. AP-68, March, 1970.

A. Source Category: V Chemical Process Industry

B. Sub Category: Ethylene Oxide

C. Source Description:

Ethylene oxide is produced by direct oxidation of ethylene. The reaction is carried out in the vapor phase using either air or high purity oxygen over a silver catalyst at ∿536°F (280°C) and 15 atmospheres pressure as described by the following equation:

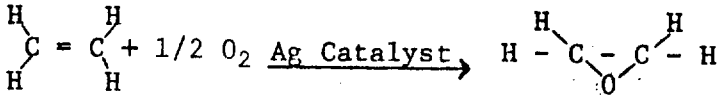

Ethylene — Ethylene Oxide

The air process is an important polluter while emissions from the oxygen process are negligible. As shown in the flow diagram in Figure V-10, ethylene and air are combined with recycle gas and fed to a large tubular catalytic reactor where the conversion reaction takes place. This process includes four major parts:

1. the oxidation reaction of ethylene,
2. the recovery from the reactor effluent of ethylene oxide,
3. purging of by-product gases from the recycle stream,
4. purification of ethylene oxide.

The oxidation reaction is the heart of the process. A typical ethylene oxide plant produces 92,500 tons annually.

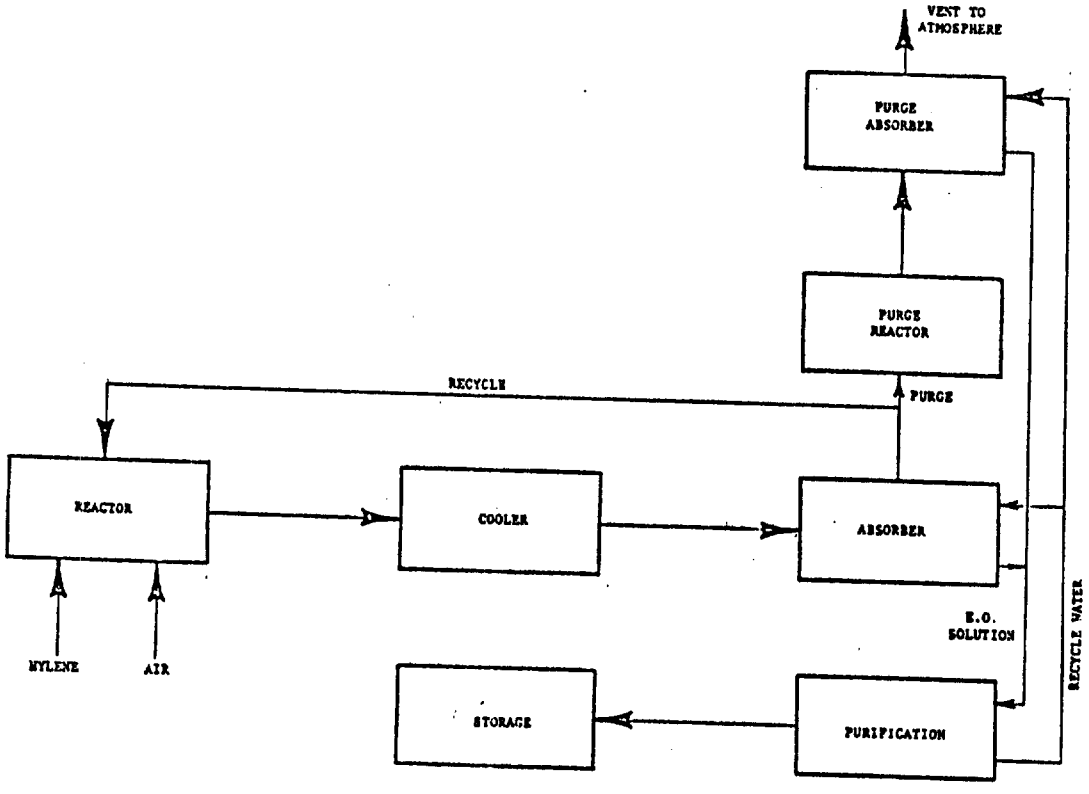

Figure V-10: Ethylene Oxide Manufacture

D. Emission Rates:

The purging of the by-product gases from the recycle stream and the purification of ethylene oxide product cause hydrocarbon to be released to the atmosphere. The uncontrolled and controlled hydrocarbon emissions are shown in Table V-13.(1)2

TABLE V-13

HYDROCARBON EMISSIONS FROM
ETHYLENE OXIDE MANUFACTURE BY AIR OXIDATION

Type of Operation and Control	% Control	Hydrocarbon Emissions *based on 92,500 tons product/yr (253.4 tons/day)			
		lbs/ton	kg/mt	lbs/hr	kg/hr
Air Oxidation of Ethylene, Uncontrolled	0	392	196	4140	1880
Air Oxidation of Ethylene, with Incineration	80	78.4	39.2	827	375
Air Oxidation of Ethylene, with Incineration	90	39.2	19.6	414	188
Air Oxidation of Ethylene, with Incineration	99	3.92	1.96	21	9.4
Air Oxidation of Ethylene, with Catalytic Converter	99	3.92	1.96	21	9.4

E. Control Equipment:

Both incinerators and catalytic converters have been used to control emissions from ethylene oxide manufacturing processes. Incinerator efficiency ranges from 80-100%(2)10 while catalytic converters can reduce hydrocarbon emissions by 99%.(1)

F. New Source Performance Standards and Regulations Limitations:

New Source Performance Standards (NSPS): No "New Source Performance Standards" have been promulgated for ethylene oxide manufacture.

State Regulations for New and Existing Sources: Many states regulate emissions from ethylene producing plants or other ethylene sources. Alabama, Connecticut, Ohio, Pennsylvania, Puerto Rico, Texas, and Virginia are representative of states that have specific regulations for waste gas disposal. These regulations are similar to those specified in Appendix B (Federal Register, August 14, 1971). Appendix B states that any waste gas stream containing organic compounds from any ethylene producing plant or other ethylene emission source can be burned at 1300^{0}F for 0.3 seconds or greater in a direct-flame afterburner or an equally effective device. This does not apply to emergency reliefs and vapor blowdown systems. The emission of organic compounds from a vapor blowdown system or emergency relief can be burned by a smokeless flare, or an equally effective control device. This emission limitation will reduce organic compound emissions approximately 98%.

Potential Source Compliance and Emission Limitations: Hydrocarbon emissions are not based on process weight, and large processes such as ethylene oxide manufacture by air oxidation require tight control to meet limitations. The use of afterburners for incineration will meet the limitations specified in Appendix B.

The Environment Reporter was used to update the emission limitations.

G. References:

Literature used to develop the material presented in this section is listed below.

(1) Background Information for Stationary Source Categories. Provided by EPA, Joseph J. Sableski, Chief, Industrial Survey Section, Industrial Studies Branch, November 3, 1972.

(2) Organic Compound Emission Sources Emission Control Techniques and Emission Limitation Guidelines (Draft), EPA, Emission Standards and Engineering Division, June, 1974.

(3) Stobaugh, R.B., G.C. Ray, Ronald A. Spinke. "Ethylene Oxide: How, Where, Who--Future." Hydrocarbon Processing. October, 1970.

(4) Analysis of Final State Implementation Plans, Rules, and Regulations, EPA, Contract 68-02-0248, July, 1972, Mitre Corporation.

Two additional sources were consulted but not directly used to develop the discussion on ethylene oxide. These were:

(5) Control Techniques for Hydrocarbon and Organic Solvent Emissions from Stationary Sources. U.S. Department of Health, Education, and Welfare. National Air Pollution Control Administration Publication No. AP-68. March, 1970.

(6) "Oxides of Ethylene, Propylene Face Trouble." Chemical and Engineering News. May 21, 1973.

A. Source Category: V Chemical Process Industry

B. Sub Category: Formaldehyde

C. Source Description:

All of the formaldehyde produced in the United States today comes from one of two processes which use methanol as a raw material. One process uses an iron oxide catalyst (23% of production) and a large excess of air to produce formaldehyde as described by the reaction:

$$CH_3OH + 1/2\ O_2 \xrightarrow[\text{Catalyst}]{\text{Iron Oxide}} CH_2O + H_2O$$

The second method (77% of production) uses a combined oxidation-dehydration reaction over a silver catalyst as shown below:

$$CH_3OH + 1/2\ O_2 \xrightarrow{\text{Ag Catalyst}} CH_2O + H_2O$$

$$CH_3OH \longrightarrow CH_2O + H_2$$

Only about one-eighth as much air is used by the oxidation-dehydration method which also produces hydrogen as a by-product.

Methanol vapors and air are combined in a 4:1 methanol:oxygen ratio and heated to approximately 170°F (77°C). The methanol/air mixture is introduced into a battery of catalytic converters where it passes through the catalyst and is converted to formaldehyde. Converter effluent gases are quenched to avoid decomposing the formaldehyde. Liquid obtained from the quenching primary absorber contains both formaldehyde and unreacted methanol. Some of this so-called F-M Liquor is recirculated to the absorber and some is purified by the fractionator to produce a formaldehyde solution that is 37% by weight. This is the standard formaldehyde product. Figure V-11 shows the flow diagram for this process. The average plant produces 33,950 tons per year of formaldehyde.

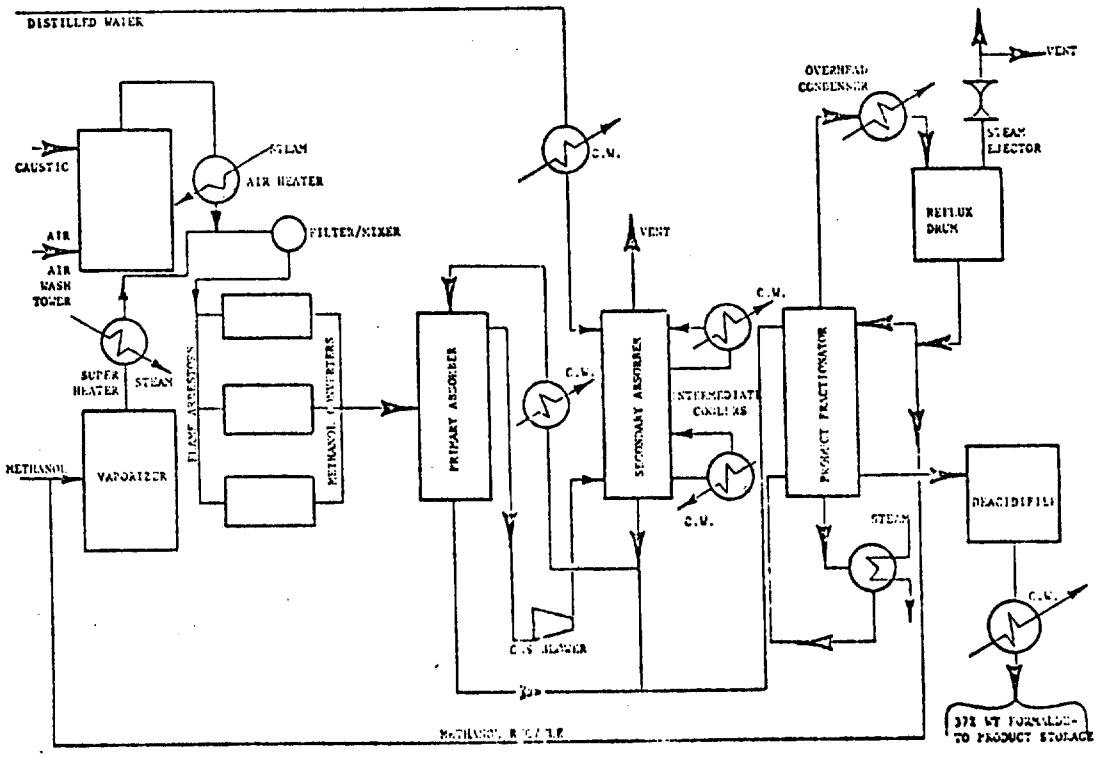

Figure V-11: Formaldehyde Process

D. Emission Rates:

In both methods formaldehyde is absorbed from the gas stream by a water scrubber, and the inert materials and by-products are vented. The major source of hydrocarbon emissions is the absorber vent and the fractionator vent. The emission rates for the two formaldehyde-producing processes are shown with and without control in Table V-15.[1]2,3

TABLE V-15

HYDROCARBON EMISSIONS FROM FORMALDEHYDE MANUFACTURE

Process and Control Equipment		% Control	Hydrocarbon Emissions (based on 3.9 tons/hr)			
			lbs/ton	kg/mt	lbs/hr	kg/hr
Iron Oxide Catalyst	None	0	50	25	195	88.5
Iron Oxide Catalyst	Water Scrubber	65 (for formaldehyde and methanol only)	17.5	8.8	68.3	31.0
Silver Catalyst	None	0	10	5	39	17.7
Silver Catalyst	Incinerator	95-99	0.1-0.5	0.05-0.25	0.4-2.0	0.18-0.91

E. Control Equipment:

Hydrocarbon emissions from the iron oxide process depend on absorber designs. A water scrubber is the only demonstrated technology and removes 95% of the formaldehyde in the iron oxide process vent.[1]3 Most of the methanol is removed but none of the dimethylether is scrubbed. The composition of the absorber vent gases originating with the silver catalyst process also varies with absorber design. Absorption with the silver catalyst is simpler because of lower gas volume, and an incinerator is successful at combusting these gases with almost 100% efficiency. Controlled emission rates for both processes are shown in Table V-15.

F. New Source Performance Standards and Regulation Limitations:

New Source Performance Standards (NSPS): No New Source Performance Standards have been promulgated for formaldehyde manufacture.

State Regulations for New and Existing Sources: Very few if any states have adopted hydrocarbon regulations for specific process industries such as formaldehyde. Currently, hydrocarbon emission regulations are patterned after Los Angeles Rule 66 and Appendix B type legislation. Organic solvent useage is categorized by three basic types. These are, (1) heating of articles by direct flame or baking with any organic solvent, (2) discharge into the atmosphere of photochemically reactive solvents by devices that employ or apply the solvent, (also includes air or heated drying of articles for the first twelve hours after removal from #1 type device) and (3) discharge into the atmosphere of non-photochemically reactive solvents. For the purposes of Rule 66, reactive solvents are defined as solvents of more than 20% by volume of the following:

1. A combination of hydrocarbons, alcohols, aldehydes, esters, ethers or ketones having an olefinic or cyclo-olefinic type of unsaturation: 5 per cent
2. A combination of aromatic compounds with eight or more carbon atoms to the molecule except ethylbenzene: 8 per cent
3. A combination of ethylbenzene, ketones having branched hydrocarbon structures, trichloroethylene or tolune: 20 per cent

Rule 66 limits emissions of hydrocarbons according to the three process types. These limitations are as follows:

Process	lbs/day &	lbs/hour
1. heated process	15	3
2. unheated photochemically reactive	40	8
3. non-photochemically reactive	3000	450

Appendix B (Federal Register, Vol. 36, No. 158 - Saturday, August 14, 1971) limits the emission of photochemically reactive hydrocarbons to 15 lbs/day and 3 lbs/hr. Reactive solvents can be exempted from the regulation if the solvent is less than 20% of the total volume of a water based solvent. Solvents which have shown to be virtually unreactive are, saturated halogenated hydrocarbons, perchloroethylene, benzene, acetone and c_1-c_5n-paraffins.

For both Appendix B and Rule 66 type legislation, if 85% control has been demonstrated the regulation has been met by the source even if the lbs/day and lbs/hour values have been exceeded. Most states have regulations that limit the emissions from handling and use of organic solvents. Alabama, Connecticut and Ohio have regulations patterned after Los Angeles Rule 66. Indiana and Louisiana have regulations patterned after Appendix B. Some states such as North Carolina have an organic solvent regulation which is patterned after both types of regulations.

Table V-16 presents uncontrolled and controlled emissions and limitations for formaldehyde manufacture.

TABLE V-16

HYDROCARBON EMISSIONS AND LIMITATIONS FROM FORMALDEHYDE MANUFACTURE

Process and Control Equipment		% Control	Hydrocarbon Emissions (based on 3.9 tons/hr)		Limitations[4] lbs/hr/kg/hr			
			lbs/hr	kg/hr	Heated		Unheated	
Iron Oxide Catalyst	None	0	195	88.5	3	1.4	8	3.6
Iron Oxide Catalyst	Water Scrubber	65 (for formaldehyde and methanol only)	68.3	31.0	3	1.4	8	3.6
Silver Catalyst	None	0	39	17.7	3	1.4	8	3.6
Silver Catalyst	Incinerator	95-99	0.4-2.0	0.18-0.91	3	1.4	8	3.6

Potential Source Compliance and Emission Limitations: Hydrocarbon emission limitations are not based on process weight. Reactive hydrocarbon emissions from formaldehyde manufacture are small considering the size of the process. However, tight control must be maintained for a 33,950 ton/year process to maintain compliance with state regulations. Formaldehyde manufacture using the iron catalyst system must maintain 98% control to meet the 3 lbs/hr limitation and 96% control to meet the 8 lbs/hour limitation. Formaldehyde manufacture using the silver catalyst must maintain 91% control to meet the 3 lb/hr limitation and 77% control to meet the 8 lbs/hour limitation. Existing fume incinerator control technology is adequate for formaldehyde manufacture to meet existing regulations.

The Environment Reporter was used to update the emission limitations.

G. References:

References used to develop this section include:

(1) Background Information for Stationary Source Categories. Provided by EPA, Joseph J. Sableski, Chief, Industrial Survey Section, Industrial Studies Branch, November 3, 1972.

(2) Pervier, J.W., R.C. Barley, D.E. Field, B.M. Friedman, R.B. Morris, W.A. Schwartz. Survey Reports on Atmospheric Emissions from the Petrochemical Industry, Volume II. Air Products and Chemicals, Inc. EPA Contract No. 68-02-0255. April, 1974.

(3) Hedley, W.H., S.M. Mehta, C.M. Moscowitz, R.B. Reznik, G.A. Richardson, D.L. Zanders. Potential Pollutants from Petrochemical Processes (Final Report). Monsanto Research Corporation. EPA Contract No. 68-02-0226, Task No. 9. December, 1973.

(4) Analysis of Final State Implementation Plans, Rules and Regulations, EPA Contract 68-02-0248, July, 1972, Mitre Corporation.

Also consulted but not directly used in this section were:

(5) Control Techniques for Hydrocarbon and Organic Solvent Emissions from Stationary Sources. U.S. Department of Health, Education, and Welfare. National Air Pollution Control Administration Publication No. AP-68. March, 1970.

(6) Organic Compound Emission Sources Emission Control Techniques and Emission Limitation Guidelines (Draft), EPA, Emission Standards and Engineering Division, June, 1974.

A. Source Category: V Chemical Process Industry

B. Sub Category: Paint

C. Source Description:

Paint is a pigmented liquid composition which is converted to an opaque solid film after application as a thin layer. Although the paint manufacturing process is simple from a schematic viewpoint, it is a complex process. Paint manufacture consists of a mixing and dispersing pigment in a vehicle that will allow even application of the final product. Paint manufacture consists of six physical operations which are carried out at or near room temperature. These operations are:

1. mixing pigment with sufficient vehicle to make a paste of proper grinding efficiency
2. grinding the paste on a mill until aggregates are broken down
3. letting down or diluting the ground paste with the remaining materials
4. tinting to required color
5. testing
6. straining, filling, and packaging.

Figure V-12 shows the schematic for a paint manufacturing operation using a sand mill for the grinding operation.

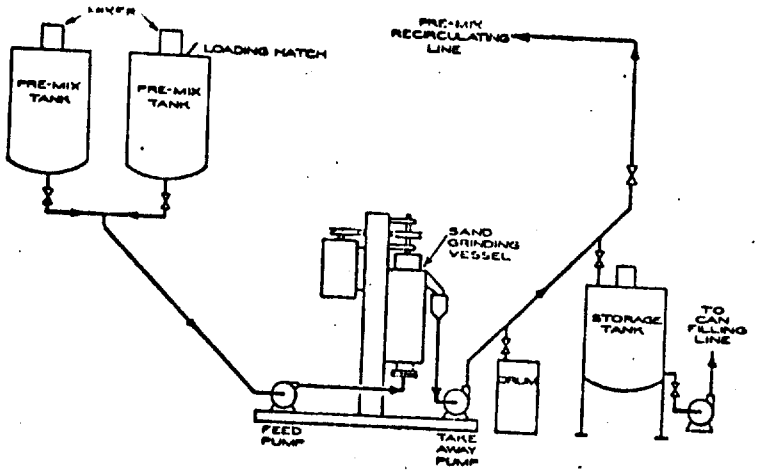

Figure V-12: Paint Manufacturing Using Sand Mill for Grinding Operation

Paint manufacturing is still largely a batch process because of the large number of raw materials and finished products required, many of which must be custom formulated and processed. An average size paint manufacturing plant produces 3,340 tons of paint per year.

D. Emission Rates:

The two major sources of hydrocarbon emissions in paint manufacturing are the (1) grinding operation, during which the batch is heated to vapor-

ize some of the ingredients, and (2) the thinning operation, where solvent vaporization occurs. Thinning of premixed paint pastes to the required consistency, involves dilution with aliphatic or aromatic hydrocarbons, alcohols, ketones, esters, and other highly volatile materials. The factors effecting emissions from paint manufacture are types of solvents used, and the mixing temperature. A recent estimate of hydrocarbon emissions from paint manufacture is 0.5% of the weight of the paint emitted as hydrocarbon [1]4-20 emissions and 1-2% of the solvent lost even under well controlled conditions. [2]5.10-1

Table V-17 shows the controlled and uncontrolled hydrocarbon emissions from the paint manufacturing processes. [2]5.10-2

TABLE V-17

HYDROCARBON EMISSIONS FROM PAINT MANUFACTURING

Type of Operation and Control	% Control	Emissions (based on 0.4 tons/hr)			
		lbs/ton	kg /m ton	lbs/hr	kg/hr
Mix tank, Grinding, Storage, uncontrolled	0	30	15	11.4	5.2
Mix tank, Grinding, Storage, with incinerator	80	6	3	2.3	1.0
Mix tank, Grinding, Storage, with incinerator	90	3	1.5	1.1	.5
Mix tank, Grinding, Storage, with incinerator	99	.3	.15	.11	.05

E. Control Equipment:

Methods of controlling hydrocarbon emissions range from changes in paint formulation to use of extensive pollution control equipment. Some of these methods include:

1. reformulation of the paint to replace photochemically reactive solvents with a less photochemically reactive solvent
2. production of water-base coatings
3. condensation and absorption by scrubbing with alkali or acid washes
4. scrubbing and adsorption by activated charcoal or other adsorbents
5. incineration
6. dispersal from high stacks.

Although many of these methods are quite effective, incineration has been accepted as the one method for elimination of organic compounds and associated odors. Catalytic oxidation has been employed as a pollution control technique at paint manufacturing plants.[3]37

F. New Source Performance Standards and Regulation Limitations:

New Source Performance Standards (NSPS): No New Source Performance Standards have been promulgated for paint manufacture.

State Regulations for New and Existing Sources: Very few if any states have adopted hydrocarbon regulations for specific process industries, such as paint manufacture. Currently, hydrocarbon emission regulations are patterned after Los Angeles Rule 66 and Appendix B type legislation. Organic solvent useage is categorized by three basic types. These are, (1) heating of articles by direct flame or baking with any organic solvent, (2) discharge into the atmosphere of photochemically reactive solvents by devices that employ or apply the solvent, (also includes air or heated drying of articles for the first twelve hours after removal from #1 type device) and (3) discharge into the atmosphere of non-photochemically reactive solvents. For the purposes of Rule 66, reactive solvents are defined as solvents of more than 20% by volume of the following:

1. A combination of hydrocarbons, alcohols, aldehydes, esters, ethers or ketones having an olefinic or cyclo-olefinic type of unsaturation: 5 per cent
2. A combination of aromatic compounds with eight or more carbon atoms to the molecule except ethylbenzene: 8 per cent
3. A combination of ethylbenzene, ketones having branched hydrocarbon structures, trichloroethylene or tolune: 20 per cent

Rule 66 limits emissions of hydrocarbons according to the three process types. These limitations are as follows:

Process	lbs/day	& lbs/hour
1. heated process	15	3
2. unheated photochemically reactive	40	8
3. non-photochemically reactive	3000	450

Appendix B (Federal Register, Vol. 36, No. 158 - Saturday, August 14, 1971) limits the emission of photochemically reactive hydrocarbons to 15 lbs/day and 3 lbs/hr. Reactive solvents can be exempted from the regulation if the solvent is less than 20% of the total volume of a water based solvent. Solvents which have shown to be virtually unreactive are, saturated halogenated hydrocarbons, perchloroethylene, benzene, acetone and c_1-c_5n-paraffins.

For both Appendix B and Rule 66 type legislation, if 85% control has been demonstrated the regulation has been met by the source even if the lbs/day and lbs/hour values have been exceeded. Most states have regulations that limit the emissions from handling and use of organic solvents. Alabama, Connecticut and Ohio have regulations patterned after Los Angeles Rule 66. Indiana and Louisiana have regulations patterned after Appendix B. Some states such as North Carolina have an organic solvent regulation which is patterned after both types of regulations.

Table V-18 presents uncontrolled and controlled emissions and limitations from paint manufacture.

TABLE V-18

HYDROCARBON EMISSIONS AND LIMITATIONS FROM PAINT MANUFACTURING

Type of Operation and Control	% Control	Emissions (based on 0.4 tons/hr)		Limitations[4] lbs/hr/kg/hr			
		lbs/hr	kg/hr				
Mix tank, Grinding, Storage, uncontrolled	0	11.4	5.2	3	1.4	8	3.6
Mix tank, Grinding, Storage, with incinerator	80	2.3	1.0	3	1.4	8	3.6
Mix tank, Grinding, Storage, with incinerator	90	1.1	.5	3	1.4	8	3.6
Mix tank, Grinding, Storage, with incinerator	99	.11	.05	3	1.4	8	3.6

Potential Source Compliance and Emissions Limitations: Hydrocarbon emission limitations are not based on process weight. Paint manufacturing processes typically are not very large on a product output basis compared to other industries and have relatively low emissions. These two parameters allow paint processes to operate without extensive control and still be in compliance with state regulations. For a paint process producing 3340 tons/year, 74% control efficiency must be maintained to meet the 3 lbs/hr limitation, and 30% control efficiency to meet the 8 lbs/hr limitation. Existing incinerator control technology is adequate to control hydrocarbon emissions from paint manufacture.

The Environment Reporter was used to update the emission limitations.

G. References:

References that were used to develop the discussion on paint manufacturing are listed below:

(1) Control Techniques for Hydrocarbon and Organic Solvent Emissions from stationary Sources. U.S. Department of Health, Education, and Welfare, National Air Pollution Control Administration Publication No. AP-68. March, 1970.

(2) Compilation of Air Pollutant Emission Factors (Second Edition). EPA Publication No. AP-42. April, 1973.

(3) Background Information for Establishment of National Standards of Performance for New Sources. Paint and Varnish Manufacturing. Walden Research Corporation. EPA Contract No. CPA 70-165, Task Order No. 4. October, 1971.

(4) Analysis of Final State Implementation Plans, Rules, and Regulations, EPA Contract 68-02-0248, July, 1972, Mitre Corporation.

(5) Background Information for Stationary Source Categories. Provided by EPA, Joseph J. Sableski, Chief, Industrial Survey Section, Industrial Studies Branch, November 3, 1972.

(6) Air Pollution Control Engineering and Cost Study of the Paint and Varnish Industry. Air Resources, Inc. EPA Contract No. 68-02-0259. June, 1974.

One source was consulted but not directly used to develop the discussion on paint manufacturing:

(7) Organic Compound Emission Sources Emission Control Techniques and Emission Limitation Guidelines (Draft), EPA, Emission Standards and Engineering Division, June, 1974.

A. Source Category: V. Chemical Process Industry

B. Sub Category: Phthalic Anhydride

C. Source Description:

Phthalic anhydride is produced by the vapor phase oxidation of naphthalene or o-xylene with excess air in fixed or fluid bed catalytic converters using some form of vanadium pentoxide as a catalyst. Regardless of which chemical is used as feedstock, the processes are similar as shown by the following reactions:

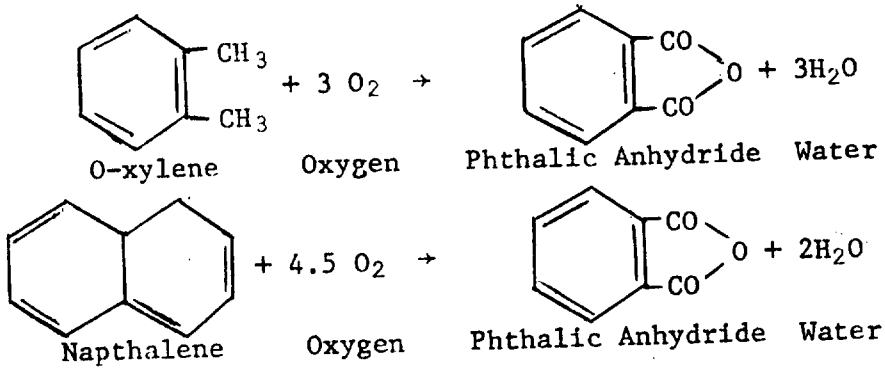

Figure V-13: Phthalic Anhydride Reactions

Figure V-13A illustrates the basic steps involved in the manufacturing process. Air and a raw material, either o-xylene or napthalene, are fed to the reactor as a heated vaporized mixture. After the oxidation process takes place, the process vapors pass through gas coolers and condensers where the anhydride is separated from the process air stream. The condensed pthalic anhydride is melted and purified by fractionation and then stored. The average phthalic anhydride plant produces approximately 20,700 tons of finished product yearly.

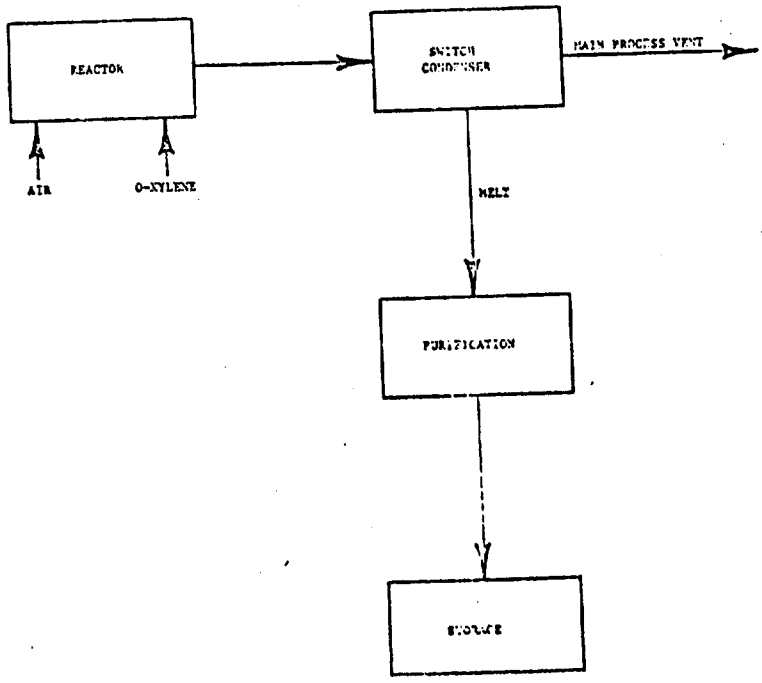

Figure V-13A: Phthalic Anhydride Manufacturing Process

D. Emission Rates:

The process off gas constitutes the greatest source of hydrocarbon emissions. This gas consists of large volumes of air contaminated with small quantities of organic vapors as well as other contaminants. In addition to this source, there are four minor sources of organic emissions which include:

1. feed and product storage tanks.
2. process refining vents,
3. flaking and bagging operations,
4. loss of heat transfer medium (Dowtherm A).

The uncontrolled and controlled hydrocarbon emissions from phthalic anhydride manufacturing are shown in Table V-19.[1][2]

TABLE V-19

HYDROCARBON EMISSIONS FROM PHTHALIC ANHYDRIDE MANUFACTURING

Type of Operation and Control	% Control	Hydrocarbons (Based on 2.4 tons/hr)			
		lbs/ton	kg/MT	lbs/hr	kg/hr
Process Off-Gas, Uncontrolled	0	130	65	312	142
Process Off-Gas, Incinerator	99	1.3	.65	3.1	1.9
Process Off-Gas, Scrubber	95	6	3	14.4	6.5

E. Control Equipment:

The process off-gas is scrubbed with a water scrubber before the gas is released to the atmosphere. Although scrubber efficiencies may average 95 percent, scrubbers do present several disadvantages:

1. The level of contaminant control needed would require a relatively expensive multistage scrubber.
2. Treatment and disposition of the scrubbing liquid may be costly.
3. Chemical recovery from a scrubbing solution would be a formidable operation.

Because of these problems, many phthalic anhydride manufacturers have found it more attractive to incinerate the off-gases using either direct flame or catalytic units with resulting efficiencies approaching 99 percent. Controlled emissions from phthalic anhydride plants are presented in Table V-19.

F. New Source Performance Standards and Regulation Limitations:

New Source Performance Standards (NSPS): No "New Source Performance Standards" have been promulgated for phthalic anhydride manufacture.

State Regulations for New and Existing Sources: Alabama, Puerto Rico and Texas are representative of states that require control of waste gas disposal emissions to the atmosphere. These regulations are patterned after Appendix B which requires that the waste gas stream be incinerated at 1300^0 F for 0.3 seconds. Appendix B states that a direct-flame afterburner operating under the above conditions can achieve approximately 98% control. The Texas regulation specifies certain compounds and certain classes of compounds that must be burned in a direct-flame incinerator. These specific carbon compounds are as follows:

Butadine
Isobutylene
Styrene
Isoprene
Propylene
a-Methyl-Styrene

The specific classes of carbon compounds are as follows:

Aldehydes
Alcohols
Aromatics
Ethers
Olefins
Peroxides
Amines
Acids
Esters
Ketones
Sulfides
Branched chain hydrocarbons (c_8 and above)

Texas allows sources to petition the Executive Secretary for alternate means of control. The Executive Secretary can also exempt specific waste gas streams if the source can show that the waste gas stream will not make a significant contribution of air contaminants in the atmosphere.

Potential Source Compliance and Emissions Limitations: Hydrocarbon emission limitations are not based on process weight, and large processes such as phthalic anhydride require tight control to meet limitations. Incineration of process off gases from phthalic anhydride manufacture can meet existing state regulations.

The Environment Reporter was used to update the emission limitations.

G. References:

The following references were used to develop the discussion on phthalic anhydride manufacturing:

(1) Background Information for Stationary Source Categories, Provided by EPA, Joseph J. Sableski, Chief, Indistrial Survey Section, Industrial Studies Branch, November 3, 1972.

(2) Fawcett, R.L, "Air Pollution Potential of Phthalic Anhydride Manufacture," Journal of the Air Pollution Control Association, 20(7): (July, 1970).

(3) Hedley, W.H., Potential Pollutants from Petrochemical Processes, (Final Report), Monsanto Research Corporation, EPA Contract No. 68-02-0226, Task No. 9, December, 1973.

(4) Analysis of Final State Implementation Plans--Rules and Regulations, EPA, Contract 68-02-0248, July, 1972, Mitre Corporation.

The following reference was consulted but not directly used in the development of this section.

(5) Control Techniques for Hydrocarbon and Organic Solvent Emissions from Stationary Sources, U.S. Department of Health, Education, and Welfare, National Air Pollution Control Administration Publication No. AP-68, March, 1970.

A. Source Category: V Chemical Process Industry

B. Sub Category: Polyethylene (High Density)

C. Source Description:

Three major processes are used to produce high density polyethylene. These are based on the types of phases present in the polymerization reactor. The processes are:

1. solution phase process,
2. slurry phase process, and
3. vapor phase process.

These processes are subdivided according to the physical state of the catalyst.

The two processes that are most widely used today are the Phillips Process and the Ziegler Process. The net reaction for both of these processes is described as follows:

$$nCH_2=CH_2 \rightarrow (-CH_2CH_2-)n, \text{ where } 400 < n < 4000.$$

Both processes utilize about 2000 pounds (907 kg) of ethylene feed and about 120 pounds of solvent to produce one ton of polyethylene. The Phillips process uses a jacketed, agitated tank reactor where the polymerization takes place on a chromium oxide/silica-alumina catalyst at 140°C (284°F) and 30 atmospheres pressure. The Ziegler Process carries out the polymerization reaction in a stirred tank reactor at 75°C (167°F) and five atmospheres pressure on a titanium tetrachloride/triisobutyl aluminum catalyst. Both reactions occur in the liquid phase. Polymer chain length is controlled by the addition of small amounts of hydrogen or other telogens. After suitable residence time in the reactor, unreacted monomer, solvent, waxes, and light gases are separated from the product. The polymer is then stripped of all solvent, dried, and stored. Figure V-14 summarizes the high density polyethylene manufacturing process.[2] A typical high density polyethylene plant will produce 250 tons of product per day.[2]10

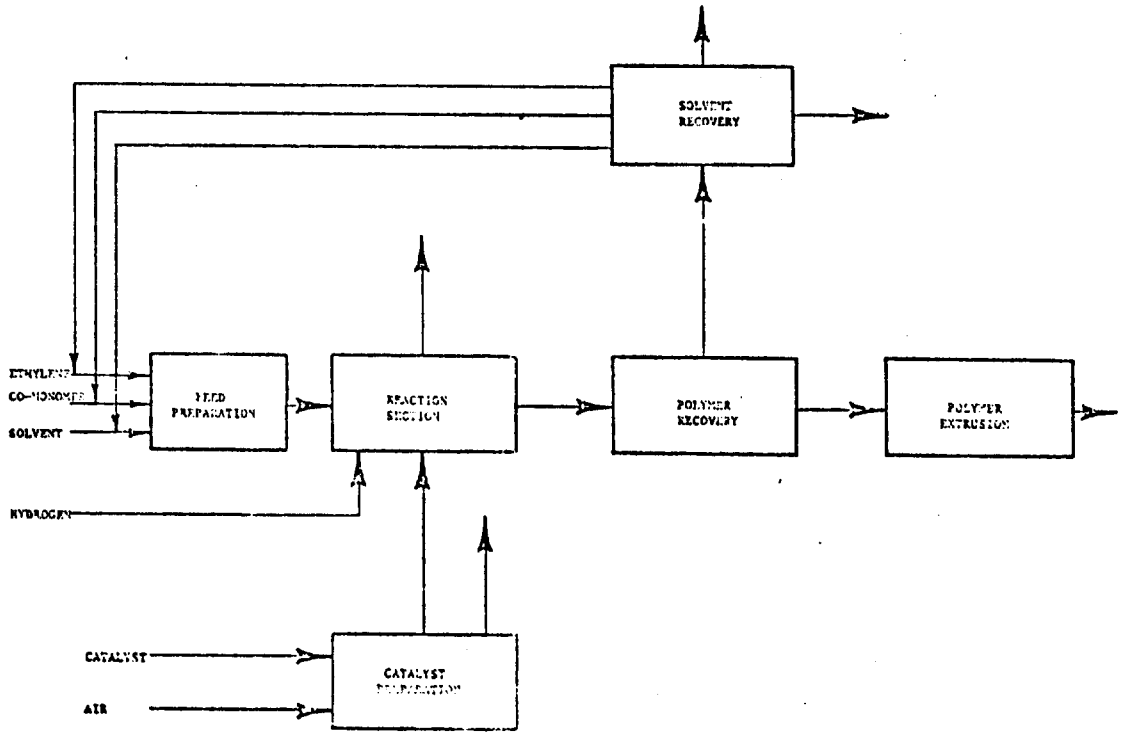

Figure V-14: High Density Polyethylene Manufacture (continued)

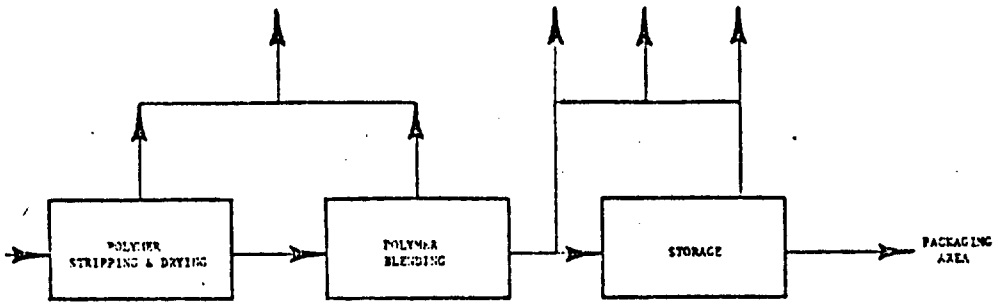

Figure V-14: High Density Polyethylene Manufacture

D. Emission Rates:

The solvent recovery, polymer stripping, and product conveying operations are the key sources of hydrocarbon emissions from plants manufacturing high density polyethylene. These emissions are listed in Table V-21.(1)Table HP-VI

TABLE V-21

HYDROCARBON EMISSIONS FROM MANUFACTURE OF HIGH DENSITY POLYETHYLENE

Type of Operation and Control	% Control	Hydrocarbon Emissions (based on 91,250 tons product/yr)			
		lb/ton	kg/MT	lb/hr	kg/hr
Solvent Recovery, uncontrolled	0	4.	2	42.0	19.0
Solvent Recovery, incinerator	99	0.04	0.02	0.4	.2
Polymer Stripping, uncontrolled	0	18.0	9.0	187.0	90.0
Polymer Stripping, incinerator	99	0.18	0.09	1.9	.9

E. Control Equipment:

Various control devices are used at high density polyethylene plants to control hydrocarbon emissions, including cyclones, bag filters, incinerators, and flares. The first two devices are used to control particulate emissions from the conveying system while the latter two are used to reduce the hydrocarbons emitted by the solvent recovery and polymer stripping operations. The controlled hydrocarbon emissions from high density polyethylene manufacture are presented in Table V-21.

F. New Source Performance Standards and Regulation Limitations:

New Source Performance Standards (NSPS): No "New Source Performance Standards" have been promulgated for high density polyethylene manufacture.

State Regulations for New and Existing Sources: Currently, hydrocarbon emission regulations are patterned after Los Angeles Rule 66 and Appendix B type legislation. Organic solvent useage is categorized by three basic types. These are, (1) heating of articles by direct flame or baking with any organic solvent, (2) discharge into the atmosphere of photochemically reactive solvents by devices that employ or apply the solvent, (also includes air or heated drying of articles for the first twelve hours after removal from #1 type device) and (3) discharge into the atmosphere of non-photochemically reactive solvents. For the purposes of Rule 66, reactive solvents are defined as solvents of more than 20% by volume of the following:

1. A combination of hydrocarbons, alcohols, aldehydes, esters, ethers or ketones having an olefinic or cyclo-olefinic type of unsaturation: 5 per cent
2. A combination of aromatic compounds with eight or more carbon atoms to the molecule except ethylbenzene: 8 per cent
3. A combination of ethylbenzene, ketones having branched hydrocarbon structures, trichloroethylene or tolune: 20 per cent

Rule 66 limits emissions of hydrocarbons according to the three process types. These limitations are as follows:

Process	lbs/day	& lbs/hour
1. heated process	15	3
2. unheated photochemically reactive	40	8
3. non-photochemically reactive	3000	450

Appendix B (Federal Register, Vol. 36, No. 158 - Saturday, August 14, 1971) limits the emission of photochemically reactive hydrocarbons to 15 lbs/day and 3 lbs/hr. Reactive solvents can be exempted from the regulation if the solvent is less than 20% of the total volume of a water based solvent. Solvents which have shown to be virtually unreactive are, saturated halogenated hydrocarbons, perchloroethylene, benzene, acetone and c_1-c_5 n-paraffins.

For both Appendix B and Rule 66 type legislation, if 85% control has been demonstrated the regulation has been met by the source even if the lbs/day and lbs/hour values have been exceeded. Most states have regulations that limit the emissions from handling and use of organic solvents. Alabama, Connecticut and Ohio have regulations patterned after Los Angeles Rule 66. Indiana and Louisiana have regulations patterned after Appendix B. Some states such as North Carolina have an organic solvent regulation which is patterned after both types of regulations.

Table V-22 presents uncontrolled and controlled emissions and limitations from high density polyethylene manufacture.

TABLE V-22

HYDROCARBON EMISSIONS AND LIMITATIONS
FROM MANUFACTURE OF HIGH DENSITY POLYETHYLENE

Type of Operation and Control	% Control	Hydrocarbon Emissions (based on 91,250 tons product/yr)		Limitations[4] lb/hr / kg/hr			
		lb/hr	kg/hr	Heated		Unheated	
Solvent Recovery, uncontrolled	0	42.0	19.0	3	1.4	8	3.6
Solvent Recovery, incinerator	99	0.4	.2	3	1.4	8	3.6
Polymer Stripping, uncontrolled	0	187.0	90.0	3	1.4	8	3.6
Polymer Stripping, incinerator	99	1.9	.9	3	1.4	8	3.6

Potential Source Compliance and Emission Limitations: Hydrocarbon emission limitations are not based on process weight, and large processes such as high density polyethylene manufacture require tight control to meet limitations. The solvent recovery unit requires 93% control efficiency to meet the 3 lbs/hr limit and 81% efficiency to meet the 8 lbs/hr limit. The polymer stripping unit requires 98% control efficiency to meet the 3 lbs/hr limit and 96% control efficiency to meet the 8 lb/hr limit. Incinerators have proved effective in reducing these types of hydrocarbon emissions by 99%. Existing control technology is adequate for a 91,250 ton/year high density polyethylene to meet State regulations.

The Environment Reporter was used to update the emission limitations.

G. References:

The following references were used to develop the material in this section:

(1) Pervier, J. S., R. C. Barley, D. E. Field, B. M. Friedman, R. B. Morris, W. A. Schwartz. Survey Reports on Atmospheric Emissions from the Petrochemical Industry, volume II. Air Products and Chemicals, Inc. EPA Contract No. 68-02-0255. April, 1974.

(2) Organic Compound Emission Sources, Emission Control Techniques, and Emission Limitation Guidelines (Draft), EPA, Emission Standards and Engineering Division, June, 1974.

(3) Hedley, W. H. Potential Pollutants from Petrochemical Processes (final report). Monsanto Research Corp. EPA Contract No. 68-02-0226, Task No. 9, December, 1973.

(4) Analysis of Final State Implementation Plans - Rules and Regulations, EPA, Contract 68-02-0248, July, 1972, Mitre Corporation.

A. Source Category: V Chemical Process Industry

B. Sub Category: Low Density Polyethylene

C. Source Description:

The characterizing variable in the production of low density polyethylene is pressure, which normally ranges from 10,000 to 30,000 PSIG (42.67 kg/m^2), and can reach levels as high as 45,000 PSIG (64.01 kg/m^2). The net reaction of the ethylene polymerization on a catalytic surface is shown below:

$$n_x \left[\begin{array}{cc} H & H \\ | & | \\ C & = C \\ | & | \\ H & H \end{array} \right] \xrightarrow[\text{Catalyst}]{\text{High Pressure,}} \underset{\text{(Free Radical Sources)}}{} R_1 - \begin{array}{c} H \\ | \\ C \\ | \\ H \end{array} - \begin{array}{c} H \\ | \\ C \\ | \\ H \end{array} - (C_2H_4)_{(n-2)} - \begin{array}{c} H \\ | \\ C \\ | \\ H \end{array} - \begin{array}{c} H \\ | \\ C \\ | \\ H \end{array} - R_2,$$

Where n = 400-2,000.

R_1 and R_2 represent chain-terminations resulting from the introduction of telogens, which are specifically chosen to accomplish this end. Although it is not shown in the reaction products above, low density polyethylene structures are usually characterized by branched chains.

The polymerization reaction takes place in the liquid phase in either an autoclave or a tubular type reactor. When the autoclave is used, the temperature is held at 240°C (464°F) and the pressure ranges from 1,600 to 2,520 atmospheres (1.6 x 10^7 to 2.5 x 10^7 kg/m^2). Residence time in the reactor is 20 seconds at 1,600 atmospheres (1.6 x 10^7 kg/m^2). The tubular reactor calls for a temperature of 250°C (482°F) under 1,560 atmospheres (1.6 x 10^7 kg/m^2) pressure and a residence time of 30 seconds. Both reactors consume approximately 2,000 pounds (907 kg) ethylene per ton of low density polyethylene produced. An average plant will produce 182,500 tons of low density polyethylene per year. After the reaction is complete, the monomer-polymer mix is flasked and unreacted monomer, solvent, and waxes are separated from the product, which is then extruded and pelletized for handling. The low density polyethylene manufacturing process flow diagram is shown in Figure V-15.(1)

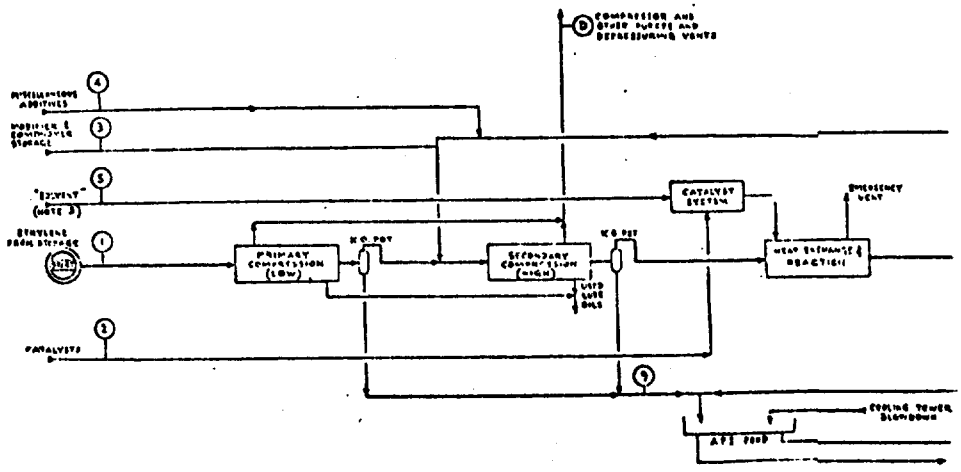

Figure V-15: Low Density Polyethylene Manufacture (continued)

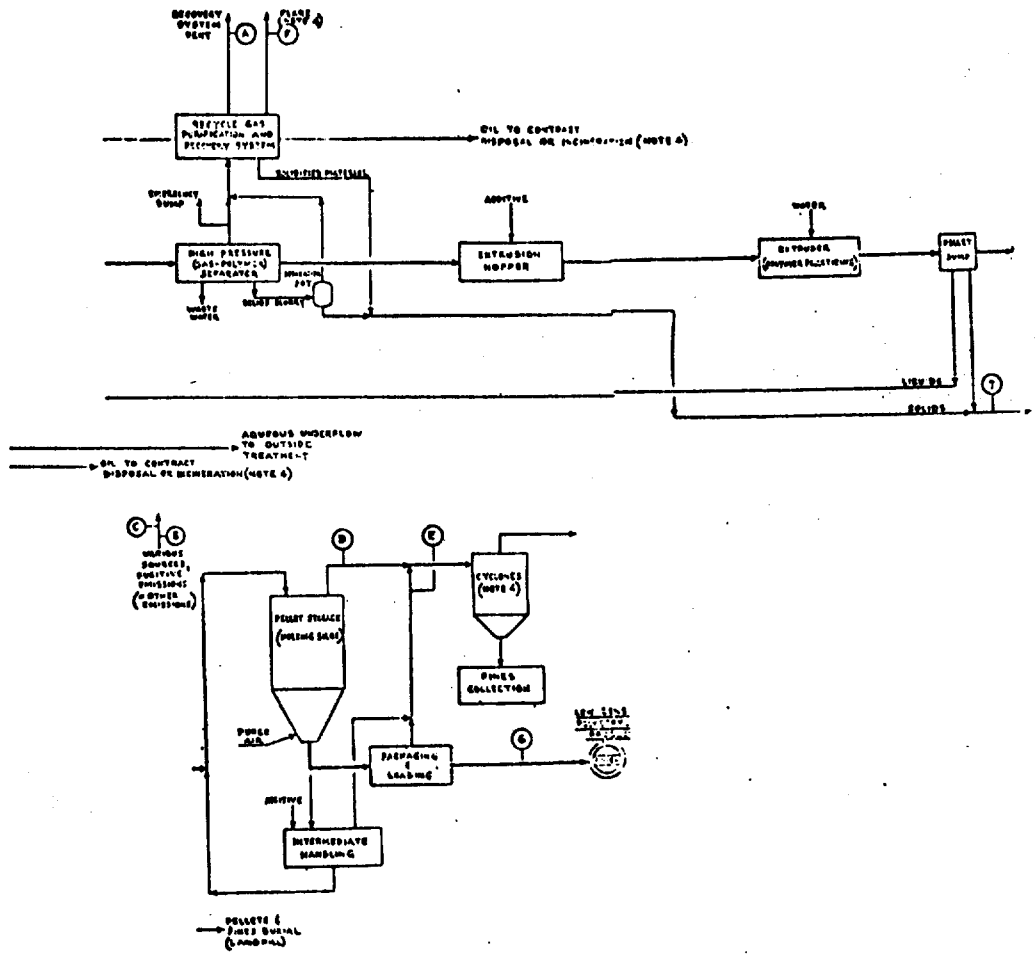

Figure V-15: Low Density Polyethylene Manufacture

D. Emission Rates:

There are three main sources of hydrocarbon emissions in the production of low density polyethylene. These are the compressor purge gas, the materials handling operation, and the gas separation and recovery operation. There are also some sources of fugitive emissions as well. The hydrocarbon emissions for low density polyethylene manufacture are summarized in Table V-23[1],[2]10

TABLE V-23

HYDROCARBON EMISSIONS FROM MANUFACTURE OF LOW DENSITY POLYETHYLENE

Type of Operation and Control	% Control	Hydrocarbon Emissions (Based on 182,500 tons/yr)			
		lbs/ton	kg/MT	lbs/hr	kg/hr
Compressor Purge, Uncontrolled	0	2	1	42	19
Compressor Purge, Incinerator	99	0.02	0.01	0.42	.20
Gas Separation/Recovery, Uncontrolled	0	20	10	416	189
Gas Separation/Recovery, Incinerator	99	0.20	0.10	4.16	1.89

E. Control Equipment:

The emission control devices used in the manufacture of low density polyethylene include cyclones, bag filters, incinerators, and flares. Cyclones and filters are used to reduce particulate emissions from product handling operations while incinerators and flares reduce hydrocarbon emissions from system purge gases and recovery operations. The controlled and uncontrolled hydrocarbon emissions from low density polyethylene manufacture are shown in Table V-23.

F. New Source Performance Standards and Regulation Limitations:

New Source Performance Standards (NSPS): No "New Source Performance Standards" have been promulgated for low density polyethylene manufacture.

State Regulations for New and Existing Sources: Alabama, Puerto Rico and Texas are representative of states that require control of waste gas disposal emissions to the atmosphere. These regulations are patterned after Appendix B which requires that the waste stream be incinerated at 1300^0 F for 0.3 seconds. Appendix B states that a direct flame afterburner operating under the above conditions can achieve approximately 98% control. The Texas regulation specifies certain compounds and certain classes of compounds that must be burned in a direct-flame incinerator. These specific carbon compounds are as follows:

Butadine
Isobutylene
Styrene
Isoprene
Propylene
a-Methyl-Styrene

The specific classes of carbon compounds are as follows:

Aldehydes
Alcohols
Aromatics
Ethers
Olefins
Peroxides
Amines
Acids
Esters
Ketones
Sulfides
Branched chain hydrocarbons (c_8 and above)

Texas allows sources to petition the Executive Secretary for alternate means of control. The Executive Secretary can also exempt specific waste gas streams if the source can show that the waste gas stream will not make a significant contribution of air contaminants in the atmosphere.

Potential Source Compliance and Emission Limitations: Hydrocarbon emission limitations are not based on process weight but large processes such as low density polyethylene can be controlled to meet existing regulations by application and proper use of direct flame afterburners.

The Environment Reporter was used to update emission limitations.

G. References:

The following references were used to develop the discussion on low density polyethylene.

(1) Pervier, J.W., Barley, R.C., Field, D.E., Friedman, B.M., Morris, R.B., and Schwartz, Survey Reports on Atmospheric Emissions from the Petrochemical Industry, Volume II, Air Products and Chemicals, Inc., EPA Contract No. 68-02-0255, April, 1974.

(2) Organic Compound Emission Sources Emission Control Techniques and Emission Limitation Guidelines (Draft), EPA, Emission Standards and Engineering Division, June, 1974.

(3) Hedley, W.H., Potential Pollutants from Petrochemical Processes, (Final Report), Monsanto Research Corp., EPA Contract No. 68-02-0226, Task No. 9, December, 1973.

(4) Analysis of Final State Implementation Plans--Rules and Regulations, EPA Contract 68-02-0248, July, 1972, Mitre Corporation.

A. Source Category: V Chemical Process Industry

B. Sub Category: Polystyrene

C. Source Description:

Several techniques are used for the polymerization of styrene. In order of decreasing importance they are:

1. solution polymerization
2. suspension polymerization
3. emulsion polymerization

The solution and suspension techniques are the most commonly used.

There are two techniques for the manufacture of the polystyrene and they consume approximately 2,000 pounds of styrene per ton of polystyrene produced. The reaction is:

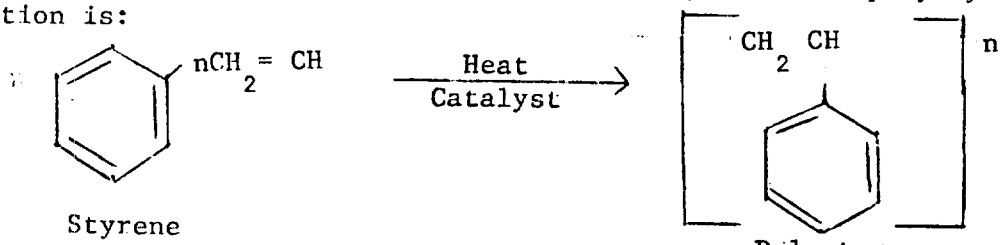

Styrene

Polystyrene

The suspension reaction is carried out batchwise in a stirred, nitrogen-purged, steam/water jacketed reactor. Styrene and peroxide are added to a water slurry of tricalcium phosphate and dodecyl-benzene sulfonate. The temperature is raised to 194°F (90°C) and to 239°F (115°C) six and one-half hours later. The polymer is produced in the form of small beads and is separated from the suspension after cooling. The beads are then washed, dried, and extruded.

In the solution technique, styrene and solvent (such as ethylbenzene) are fed into a series of tubular agitated polymerization reactors. The mixture enters the first reactor at about 250°F (121°C) and leaves the last one at about 340°F (171°C). The solvent containing polymer is then pumped into a devolatilizer for removal of unreacted monomer and solvent which are recycled to feed. The polymer is extruded, cooled, cut, and conveyed to storage.

Figure V-16 schematically illustrates the polystyrene manufacturing process.[1] Using these processes, an average plant will produce 47,500 tons of polystyrene annually.

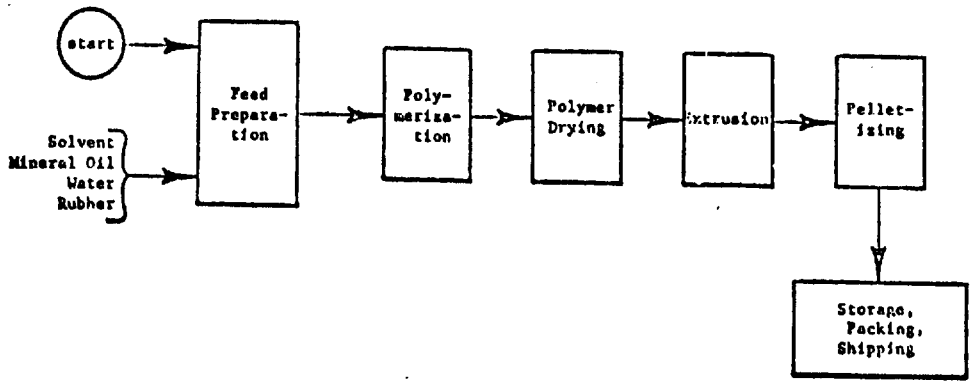

Figure V-16: Polystyrene Manufacture

D. Emission Rates:

The feed preparation operation, the reactor vent, and the solvent recovery operation are three major sources of hydrocarbon emissions from the polystyrene manufacturing process. The hydrocarbon emissions from these sources are summarized in Table V-25.(1)

TABLE V-25

HYDROCARBON EMISSIONS FROM POLYSTYRENE MANUFACTURE

Type of Operation and Control	% Control	Hydrocarbon Emissions (based on 5.4 tons/hr)			
		lbs/ton	kg/mt	lbs/hr	kg/hr
Feed Preparation, Uncontrolled	0	1.3	.7	7.0	3.2
Feed Preparation, Incinerator	99	.013	.007	.070	.032
Reactor Vent, Uncontrolled	0	6.7	3.4	36.2	16.4
Reactor Vent, Incinerator	99	.06	.034	.36	.16
Solvent Recovery, Uncontrolled	0	3.7	1.9	19.9	9.0
Solvent Recovery, Incinerator	99	.037	.019	.2	.090

E. Control Equipment:

Control in the polystyrene industry is not extensive because reactive hydrocarbon emissions are not substantial. The utilization of existing technology such as flares and incinerators could significantly reduce the hydrocarbon emissions associated with the production of polystyrene. Table V-25 shows the reduced hydrocarbon emissions that could be attained by use of an incinerator or other combustion device.

F. New Source Performance Standards and Emission Limitations:

New Source Performance Standards (NSPS): No New Source Performance Standards have been promulgated for polystyrene manufacture.

State Regulations for New and Existing Sources: Currently, hydrocarbon emission regulations are patterned after Los Angeles Rule 66 and Appendix B type legislation. Organic solvent useage is categorized by three basic types. These are, (1) heating of articles by direct flame or baking with any organic solvent, (2) discharge into the atmosphere of photochemically reactive solvents by devices that employ or apply the solvent, (also includes air or heated drying of articles for the first twelve hours after removal from #1 type device) and (3) discharge into the atmosphere of non-photochemically reactive solvents. For the purposes of Rule 66, reactive solvents are defined as solvents of more than 20% by volume of the following:

1. A combination of hydrocarbons, alcohols, aldehydes, esters, ethers or ketones having an olefinic or cyclo-olefinic type of unsaturation: 5 per cent
2. A combination of aromatic compounds with eight or more carbon atoms to the molecule except ethylbenzene: 8 per cent

3. A combination of ethylbenzene, ketones having branched hydrocarbon structures, trichloroethylene or tolune: 20 per cent

Rule 66 limits emissions of hydrocarbons according to the three process types. These limitations are as follows:

Process	lbs/day	& lbs/hour
1. heated process	15	3
2. unheated photochemically reactive	40	8
3. non-photochemically reactive	3000	450

Appendix B (Federal Register, Vol. 36, No. 158 - Saturday, August 14, 1971) limits the emission of photochemically reactive hydrocarbons to 15 lbs/day and 3 lbs/hr. Reactive solvents can be exempted from the regulation if the solvent is less than 20% of the total volume of a water based solvent. Solvents which have shown to be virtually unreactive are, saturated halogenated hydrocarbons, perchloroethylene, benzene, acetone and c_1-c_5n-paraffins.

For both Appendix B and Rule 66 type legislation, if 85% control has been demonstrated the regulation has been met by the source even if the lbs/day and lbs/hour values have been exceeded. Most states have regulations that limit the emissions from handling and use of organic solvents. Alabama, Connecticut and Ohio have regulations patterned after Los Angeles Rule 66. Indiana and Louisiana have regulations patterned after Appendix B. Some states such as North Carolina have an organic solvent regulation which is patterned after both types of regulations.

Table V-26 presents uncontrolled and controlled emissions and limitations for polystyrene manufacture.

TABLE V-26

HYDROCARBON EMISSIONS AND LIMITATIONS FROM POLYSTYRENE MANUFACTURE

Type of Operation and Control	% Control	Hydrocarbon Emissions (based on 5.4 tons/hr) lbs/hr	kg/hr	Limitations[3] lbs/hr/kg/hr Heated		Unheated	
Feed Preparation, Uncontrolled	0	7.0	3.2	3	1.4	8	3.63
Feed Preparation, Incinerator	99	.070	.032	3	1.4	8	3.63
Reactor Vent, Uncontrolled	0	36.2	16.4	3	1.4	8	3.63
Reactor Vent, Incinerator	99	.36	.16	3	1.4	8	3.63
Solvent Recovery, Uncontrolled	0	19.9	9.0	3	1.4	8	3.63
Solvent Recovery, Incinerator	99	.2	.090	3	1.4	8	3.63

Point Source Compliance and Emissions Limitations: Hydrocarbon emission limitations are not based on process weight. Polystyrene manufacture is a relatively small process with an intermediate level of emissions. Table V-26A presents the percent control required to comply with the 3 lbs/hour and 8 lbs/hour limitation.

TABLE V-26A
CONTROL REQUIRED FOR POLYSTYRENE MANUFACTURE

Process Description	% Control Required For	
	3 lbs/hr	8 lbs/hr
Feed Preparation	57%	0%
Reactor Vent	92%	67%
Solvent Recovery	85%	60%

Existing incinerator technology is adequate in controlling polystyrene hydrocarbon emissions to within state regulations.

The Environment Reporter was used to update the emission limitations.

G. References:

The following references were used to develop the material in this section:

(1) Pervier, J.W., R.C. Barley, D.E. Field, B.M. Friedman, R.B. Morris, W.A. Schwartz, Survey Reports on Atmospheric Emissions from the Petrochemical Industry, Volume IV. Products and Chemicals, Inc. EPA Contract No. 68-02-0255. April, 1974.

(2) Hedley, W.H. Potential Pollutants from Petrochemical Processes (Final Report). Monsanto Research Corporation, EPA Contract No. 68-02-0226, Task No. 9. December, 1973.

(3) Analysis of Final State Implementation Plans, Rules, and Regulations. EPA Contract 68-02-0248, July, 1972, Mitre Corporation.

A. Source Category: V Chemical Process Industry

B. Sub Category: Printing Ink

C. Source Description:

There are four major classes of printing ink:

1. letterpress,
2. lithographic,
3. flexographic, and
4. rotogravure.

The first two are referred to as oil or paste inks, and the last two are referred to as solvent inks. These inks vary in physical appearance, composition, method of application, and drying mechanism. Although flexographic and rotogravure inks have many elements in common with paste inks, they differ because of their very low viscosity and dry by evaporation of highly volatile solvents.

There are three steps in the manufacture of printing inks:

1. cooking the vehicle and adding the dyes,
2. grinding the pigment into the vehicle using a roller mill, and
3. replacing water in the wet pigment pulp by an ink vehicle (commonly known as the flushing process).

The ink "varnish" or vehicle is cooked in large kettles at 200° to 600°F (93° to 315°C) for 8 to 12 hours, similar to the way varnish is made. The pigment and vehicle are mixed in dough mixers or large agitated tanks. Grinding is accomplished in three or five roller mills.

D. Emission Rates:

Vehicle preparation by heating is the largest source of hydrocarbon emissions from ink manufacturing. At 350°F (175°C) the resins, drying oils, petroleum oils and solvents decompose, and the decomposition products are emitted from the cooking vessel. The emissions continue throughout the cooking process, reaching a maximum just after the maximum temperature has been reached.

The quantity, composition, and rate of emissions from ink manufacturing depend upon the cooking temperature and time, the ingredients, the method of introducing additives, the degree of stirring, and the extent of air or inert glass blowing. The hydrocarbons emitted by printing ink manufacturing processes are presented in Table V-27.[1]5.14-2

E. Control Equipment:

Hydrocarbon emissions from vehicle cooking are reduced by 90% with the use of scrubbers or condensers followed by afterburners.[1]5.14-1 The controlled hydrocarbon emissions from printing ink manufacture are presented in Table V-27.

TABLE V-27

HYDROCARBON EMISSIONS FROM PRINTING INK MANUFACTURE

Type of Operation and Control	% Control	Hydrocarbon Emissions (based on 924 tons/yr) lb/ton	kg/MT	lb/hr	kg/hr
General Vehicle Cooking, uncontrolled	0	120	60	12.0	5.4
General Vehicle Cooking with Scrubber and Afterburner	90	12	5.4	1.2	.54
Oil Vehicle Cooking, uncontrolled	0	40	20	4.0	1.8
Oil Vehicle Cooking with Scrubber and Afterburner	90	4	1.8	.4	.18
Oleoresinous Vehicle Cooking, uncontrolled	0	150	75	15.0	6.8
Oleoresinous Vehicle Cooking with Scrubber and Afterburner	90	15	6.8	1.5	.68
Cooking of Alkyds, uncontrolled	0	160	80	16.0	7.3
Cooking of Alkyds with Scrubber and Afterburner	90	16	7.3	1.6	.73

F. New Source Performance Standards and Regulation Limitations:

New Source Performance Standards (NSPS): No New Source Performance Standards have been promulgated for printing ink manufacture.

State Regulations for New and Existing Sources: Currently, hydrocarbon emission regulations are patterned after Los Angeles Rule 66 and Appendix B type legislation. Organic solvent useage is categorized by three basic types. These are, (1) heating of articles by direct flame or baking with any organic solvent, (2) discharge into the atmosphere of photochemically reactive solvents by devices that employ or apply the solvent, (also includes air or heated drying of articles for the first twelve hours after removal from #1 type device) and (3) discharge into the atmosphere of non-photochemically reactive solvents. For the purposes of Rule 66, reactive solvents are defined as solvents of more than 20% by volume of the following:

1. A combination of hydrocarbons, alcohols, aldehydes, esters, ethers or ketones having an olefinic or cyclo-olefinic type of unsaturation: 5 per cent
2. A combination of aromatic compounds with eight or more carbon atoms to the molecule except ethylbenzene: 8 per cent
3. A combination of ethylbenzene, ketones having branched hydrocarbon structures, trichloroethylene or tolune: 20 per cent

Rule 66 limits emissions of hydrocarbons according to the three process types. These limitations are as follows:

Process	lbs/day &	lbs/hour
1. heated process	15	3
2. unheated photochemically reactive	40	8
3. non-photochemically reactive	3000	450

Appendix B (Federal Register, Vol. 36, No. 158 - Saturday, August 14, 1971) limits the emission of photochemically reactive hydrocarbons to 15 lbs/day and 3 lbs/hr. Reactive solvents can be exempted from the regulation if the solvent is less than 20% of the total volume of a water based solvent. Solvents which have shown to be virtually unreactive are, saturated halogenated hydrocarbons, perchloroethylene, benzene, acetone and c_1-c_5n-paraffins.

For both Appendix B and Rule 66 type legislation, if 85% control has been demonstrated the regulation has been met by the source even if the lbs/day and lbs/hour values have been exceeded. Most states have regulations that limit the emissions from handling and use of organic solvents. Alabama, Connecticut and Ohio have regulations patterned after Los Angeles Rule 66. Indiana and Louisiana have regulations patterned after Appendix B. Some states such as North Carolina have an organic solvent regulation which is patterned after both types of regulations.

Table V-28 presents the uncontrolled and controlled hydrocarbon emissions and limitations from printing ink manufacture.

TABLE V-28

HYDROCARBON EMISSIONS AND LIMITATIONS FROM PRINTING INK MANUFACTURE

Type of Operation and Control	% Control	Hydrocarbon Emissions (based on 924 tons/yr) lb/hr	kg/hr	Limitations[4] lb/hr / kg/hr Heated		Unheated	
General Vehicle Cooking, uncontrolled	0	12.0	5.4	3	1.4	8	3.6
General Vehicle Cooking with Scrubber and Afterburner	90	1.2	.54	3	1.4	8	3.6
Oil Vehicle Cooking, uncontrolled	0	4.0	1.8	3	1.4	8	3.6
Oil Vehicle Cooking with Scrubber and Afterburner	90	.4	.18	3	1.4	8	3.6
Oleoresinous Vehicle Cooking, uncontrolled	0	15.0	6.8	3	1.4	8	3.6
Oleoresinous Vehicle Cooking with Scrubber and Afterburner	90	1.5	.68	3	1.4	8	3.6
Cooking of Alkyds, uncontrolled	0	16.0	7.3	3	1.4	8	3.6
Cooking of Alkyds with Scrubber and Afterburner	90	1.6	.73	3	1.4	8	3.6

Potential Source Compliance and Emission Limitations: Hydrocarbon emission limitations are not based on process weight. Printing ink manufacture controlled by 90% with a scrubber and afterburner as presented in Table V-28 can meet these limitations.

The Environment Reporter was used to update emission limitations.

G. References:

Literature used to develop the information presented in this section on printing ink is listed below:

1. Compilation of Air Pollutant Emission Factors (Second Edition), EPA, Publication No. AP-42, April 1973.

2. Background Information for Stationary Source Categories, Provided by EPA, Joseph J. Sableski, Chief, Industrial Survey Section, Industrial Studies Branch, November 3, 1972.

Literature reviewed but not used specifically to develop this section included the following:

3. Danielson, J. A., Air Pollution Engineering Manual (Second Edition), AP-40 Research Triangle Park, North Carolina, EPA, May 1973.

4. Analysis of Final State Implementation Plans - Rules and Regulations, EPA, Contract 68-02-0248, July 1972, Mitre Corporation.

A. Source Category: V Chemical Process Industry

B. Sub Category: Synthetic Fibers (Nylon)

C. Source Description:

Nylon is a "true" synthetic fiber, produced from the addition and other polymerization reactions that form long, chain-like molecules.

The actual spinning process is conducted in one of four ways:

1. melt spinning, in which molten polymer is pumped through spinneret jets, solidifying as it strikes the cool air;

2. dry spinning, in which the polymer is dissolved in an organic solvent, and the resulting solution is forced through spinnerets;

3. wet spinning, in which the solution is coagulated as it emerges from the spinneret; and

4. core spinning, the newest method, in which a continuous filament yarn together with short-length "hard" fibers is introduced onto a spinning frame so as to form a composite yarn.

D. Emission Rates:

The major source of hydrocarbon emissions from the nylon manufacturing process is drying of the finished fiber. These uncontrolled and controlled emissions are shown in Table V-29.(1)5.19-1

TABLE V-29

HYDROCARBON EMISSIONS FROM NYLON MANUFACTURE

Type of Operation and Control	% Control	Hydrocarbon Emissions (based on 134,500 tons/yr)			
		lbs/ton	kg/mt	lbs/hr	kg/hr
Fiber Drying, Uncontrolled	0	7	3.5	108	49
Fiber Drying, Carbon Adsorber	95	0.35	0.18	5.4	2.4

E. Control Equipment:

Hydrocarbon emissions from the manufacture of nylon are not normally controlled, but emissions can be reduced by 80-95% by adsorption on activated carbon. Table V-29 shows the controlled and uncontrolled hydrocarbon emissions from nylon manufacture.

F. New Source Performance Standards and Regulation Limitations:

New Source Performance Standards (NSPS): No New Source Performance Standards have been promulgated for synthetic fibers manufacture.

State Regulations for New and Existing Sources: Currently, hydrocarbon emission regulations are patterned after Los Angeles Rule 66 and Appendix B type legislation. Organic solvent useage is categorized by three basic types. These are, (1) heating of articles by direct flame or baking with any organic solvent, (2) discharge into the atmosphere of photochemically reactive solvents by devices that employ or apply the solvent, (also includes air or heated drying of articles for the first twelve hours after removal from #1 type device) and (3) discharge into the atmosphere of non-photochemically reactive solvents. For the purposes of Rule 66, reactive solvents are defined as solvents of more than 20% by volume of the following:

1. A combination of hydrocarbons, alcohols, aldehydes, esters, ethers or ketones having an olefinic or cyclo-olefinic type of unsaturation: 5 per cent
2. A combination of aromatic compounds with eight or more carbon atoms to the molecule except ethylbenzene: 8 per cent
3. A combination of ethylbenzene, ketones having branched hydrocarbon structures, trichloroethylene or tolune: 20 per cent

Rule 66 limits emissions of hydrocarbons according to the three process types. These limitations are as follows:

Process	lbs/day	& lbs/hour
1. heated process	15	3
2. unheated photochemically reactive	40	8
3. non-photochemically reactive	3000	450

Appendix B (Federal Register, Vol. 36, No. 158 - Saturday, August 14, 1971) limits the emission of photochemically reactive hydrocarbons to 15 lbs/day and 3 lbs/hr. Reactive solvents can be exempted from the regulation if the solvent is less than 20% of the total volume of a water based solvent. Solvents which have shown to be virtually unreactive are, saturated halogenated hydrocarbons, perchloroethylene, benzene, acetone and c_1-c_5 n-paraffins.

For both Appendix B and Rule 66 type legislation, if 85% control has been demonstrated the regulation has been met by the source even if the lbs/day and lbs/hour values have been exceeded. Most states have regulations that limit the emissions from handling and use of organic solvents. Alabama, Connecticut and Ohio have regulations patterned after Los Angeles Rule 66. Indiana and Louisiana have regulations patterned after Appendix B. Some states such as North Carolina have an organic solvent regulation which is patterned after both types of regulations.

Table V-30 presents uncontrolled and controlled emissions and limitations from nylon manufacture.

TABLE V-30

HYDROCARBON EMISSIONS AND LIMITATIONS FROM NYLON MANUFACTURE

Type of Operation and Control	% Control	Hydrocarbon Emissions (based on 134,500 tons/yr)		Limitations[3] lbs/hr/kg/hr			
		lbs/hr	kg/hr	Heated		Unheated	
Fiber Drying, Uncontrolled	0	108	49	3	1.36	8	3.63
Fiber Drying, Carbon Adsorber	95	5.4	2.4	3	1.36	8	3.63

Potential Source Compliance and Emission Limitations: Hydrocarbon emission limitations are not based on process weight, and large processes such as nylon manufacture require tight control to meet the limitations. A nylon manufacturing process producing 134,500 tons/year requires 97% control to meet the 3 lbs/hr limitation, and 93% control to meet the 8 lbs/hour limitation. Existing carbon adsorption control technology is borderline to accomplish these high control efficiencies, but a direct flame afterburner could meet existing regulations.

The Environment Reporter was used to update the emission limitations.

G. References:

The following references were used to develop the preceding discussion on nylon manufacture:

(1) Compilation of Air Pollutant Emission Factors (Second Edition). EPA. Publication No. AP-42. April, 1973.

(2) Hedley, W.H. Potential Pollutants from Petrochemical Processes (Final Report). Monsanto Research Corporation. EPA Contract No. 68-02-0226, Task No. 9. December, 1973.

(3) Analysis of Final State Implementation Plans, Rules and Regulations, EPA, Contract 68-02-0248, July, 1972, Mitre Corporation.

Another reference consulted but not directly used to develop this discussion included:

(4) "Man-made Fibers: On the Road to Recovery." Chemical Engineering News. May 31, 1971.

A. Source Category: V Chemical Process Industry

B. Sub Category: Varnish

C. Source Description:

Varnish is a clear coating produced by chemical reactions at elevated temperatures. Originally, all varnishes were made from naturally occurring material and were defined as a homogeneous solution of drying oils and resins in organic solvents. As new resins were developed, the varnishes were classified on the basis of the resins used. A general definition of varnish is an unpigmented coating consisting of resins, oils, thinners, and dryers, and drys by evaporation of the solvents and by oxidation and polymerization of the remaining constituents.

There are two basic types of varnishes, spirit varnishes and oleoresinous varnishes. Spirit varnishes are formed by dissolving a resin in a solvent and drying by evaporation of the solvent. Oleoresinous varnishes are solutions of both oils and resins which dry by solvent evaporation and by reaction of the nonvolatile liquid portion with oxygen in the air to form a solid film.

The varnish manufacturing process includes the following steps:

1. cooking
2. thinning
3. mixing
4. filtering
5. storing
6. aging
7. testing
8. packaging

The cooking process is the most important step in any varnish-making operation, for it is during this step that the following processes occur:

1. depolymerization of resins and oils,
2. bodying of natural and synthetic oils,
3. melting of materials,
4. esterification of resins, anhydrides or oils with polyhydric alcohols,
5. isomerization of oils,
6. preparation of alkyl resins,
7. purification of the resins.

Varnish is cooked in open or enclosed gas-fired kettles for periods of 4 to 16 hours at temperatures of 200 to 650°F (93 to 340°C) depending upon the particular batch being processed. The average plant produces 280 tons of varnish per year. Figure V-17 shows a typical varnish cooking room.

D. Emission Rates:

The cooking and thinning operations are the major sources of emissions in the varnish manufacturing process. The average batch starts to release vapors at about 350°F (177°C) and reaches its maximum rate of release at approximately the same time the maximum cooking temperature is reached. Obviously, the open kettle allows the vaporized material to be emitted to the atmosphere more than the closed kettle operations. The addition of solvents and thinners during the cooking process also results in the emission of hydrocarbons to the atmosphere, especially if the thinning process is carried out in open tanks. In general, the vapors released by the cooking and thinning operations include:

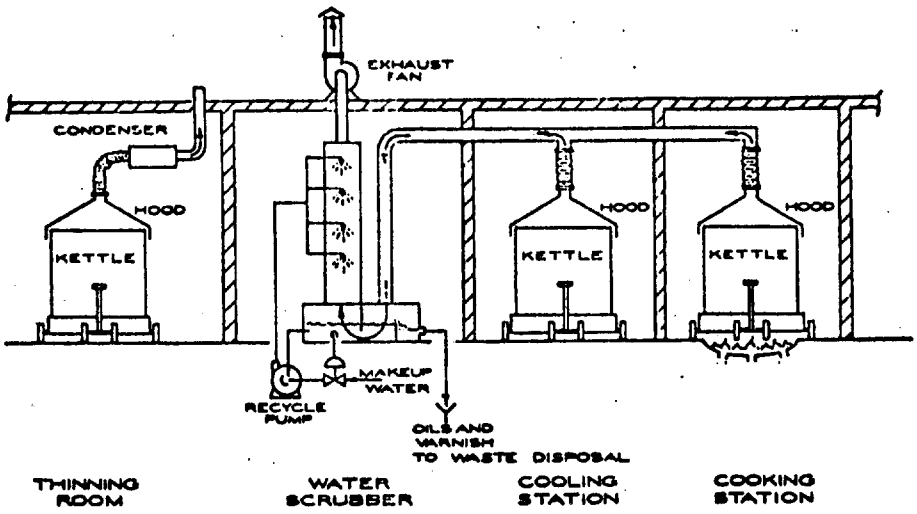

Figure V-17: Typical Varnish Cooking Room

1. low-melting temperature constituents of natural gums, synthetic acids, and rosins,
2. thermal decomposition and oxidation products volatilized during bodying of oils, and
3. volatile thinners.

The uncontrolled and controlled hydrocarbon emissions for varnish manufacturing are shown in Table V-31.(2)5.10-2

TABLE V-31

HYDROCARBON EMISSIONS FROM VARNISH MANUFACTURING

Type of Operation and Control	% Control	Hydrocarbon Emissions (based on 280 tons/yr)			
		lbs/ton	kg/mt	lbs/hr	kg/hr
Mixing and Cooking, uncontrolled	0	370	185	11.8	5.35
Mixing and Cooking, with incinerator	99	3.7	1.85	.12	.05

E. Control Equipment:

The varnish industry controls emissions because of economic reasons. Equipment used by the industry to reduce process emissions include scrubbers, absorbers, adsorbers, and afterburners. Sublimation and solvent reformulation are also practiced. Incineration of organic gases is one certain method for elimination of organic compounds and their associated odors. Catalytic oxidation has also been used with some

success in controlling hydrocarbon emissions from varnish-making operations. Table V-31 shows the controlled and uncontrolled hydrocarbon emissions for varnish-making plants.

F. New Source Performance Standards and Regulation Limitations:

New Source Performance Standards (NSPS): No "New Source Performance Standards" have been promulgated for varnish manufacture.

State Regulations for New and Existing Sources: Currently, hydrocarbon emission regulations are patterned after Los Angeles Rule 66 and Appendix B type legislation. Organic solvent useage is categorized by three basic types. These are, (1) heating of articles by direct flame or baking with any organic solvent, (2) discharge into the atmosphere of photochemically reactive solvents by devices that employ or apply the solvent, (also includes air or heated drying of articles for the first twelve hours after removal from #1 type device) and (3) discharge into the atmosphere of non-photochemically reactive solvents. For the purposes of Rule 66, reactive solvents are defined as solvents of more than 20% by volume of the following:

1. A combination of hydrocarbons, alcohols, aldehydes, esters, ethers or ketones having an olefinic or cyclo-olefinic type of unsaturation: 5 per cent
2. A combination of aromatic compounds with eight or more carbon atoms to the molecule except ethylbenzene: 8 per cent
3. A combination of ethylbenzene, ketones having branched hydrocarbon structures, trichloroethylene or tolune: 20 per cent

Rule 66 limits emissions of hydrocarbons according to the three process types. These limitations are as follows:

Process	lbs/day &	lbs/hour
1. heated process	15	3
2. unheated photochemically reactive	40	8
3. non-photochemically reactive	3000	450

Appendix B (Federal Register, Vol. 36, No. 158 - Saturday, August 14, 1971) limits the emission of photochemically reactive hydrocarbons to 15 lbs/day and 3 lbs/hr. Reactive solvents can be exempted from the regulation if the solvent is less than 20% of the total volume of a water based solvent. Solvents which have shown to be virtually unreactive are, saturated halogenated hydrocarbons, perchloroethylene, benzene, acetone and c_1-c_5n-paraffins.

For both Appendix B and Rule 66 type legislation, if 85% control has been demonstrated the regulation has been met by the source even if the lbs/day and lbs/hour values have been exceeded. Most states have regulations that limit the emissions from handling and use of organic solvents. Alabama, Connecticut and Ohio have regulations patterned after Los Angeles Rule 66. Indiana and Louisiana have regulations patterned after Appendix B. Some states such as North Carolina have an organic solvent regulation which is patterned after both types of regulations.

Table V-32 presents uncontrolled and controlled emissions and limitations for varnish manufacture.

TABLE V-32

HYDROCARBON EMISSIONS AND LIMITATIONS FROM VARNISH MANUFACTURING

Type of Operation and Control	% Control	Hydrocarbon Emissions (based on 280 tons/hr) lbs/hr	kg/hr	Limitations[4] lbs/hr/kg/hr heated		unheated	
Mixing and Cooking, Uncontrolled	0	11.8	5.35	3	1.36	8	3.63
Mixing and Cooking, with Incinerator	99	.12	.05	3	1,36	8	3.63

Potential Source Compliance and Emission Limitations: Hydrocarbon emission limitations are not based on process weight, and small processes such as varnish manufacture, while relatively heavy emitters in general, are fairly small processes. The typical 280 ton/year varnish manufacturing operation need only maintain 75% control to maintain compliance with the 3 lbs/hr limitation. Existing technology is adequate for varnish manufacture to meet existing emission limitations for a 280 ton/year operation.

The Environment Reporter was used to update the emission limitations.

G. References:

The following references were used to develop the material in this section:

(1) Compilation of Air Pollutant Emission Factors (Second Edition). EPA. Publication No. AP-42. April, 1973.

(2) Control Techniques for Hydrocarbon and Organic Solvent Emissions from Stationary Sources. U.S. Department of Health, Education, and Welfare. National Air Pollution Control Administration Publication No. AP-68. March, 1970.

(3) Background Information for Establishment of National Standards of Performance for New Sources. Paint and Varnish Manufacturing, Walden Research Corporation. EPA Contract No. EPA 70-165, Task Order No. 4. October, 1971.

(4) Analysis of Final State Implementation Plans, Rules and Regulations. EPA Contract 68-02-0248. July, 1972, Mitre Corporation.

Also consulted but not directly used to develop the foregoing discussion on varnish-making processes was:

(5) Air Pollution Control Engineering and Cost Study of the Paint and Varnish Industry. Air Resources, Inc. EPA Contract No. 68-02-0259. June, 1974

A. Source Category: V Chemical Process Industry

B. Sub Category: Synthetic Resins (Phenolic)

C. Source Description:

Phenolic resins find application as molding materials, as laminates, and as binders in plywood manufacture. Phenolic resins are produced by a condensation reaction between phenol and formaldehyde in an acid medium. The use of a molar ratio of slightly less than 1:1 results in linear polymers that can be cross-linked by the action of hexamethylene tetramime. The condensation reaction takes place in a steam-jacketed, stainless steel, or clad kettle. After about 12 hours, the reaction is arrested by neutralization of the alkaline catalyst with sulfuric acid. The reaction is shown below:

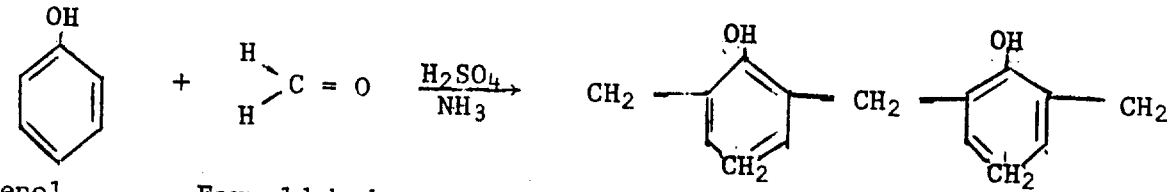

Phenol Formaldehyde Phenolic resin

Approximately 1800 pounds of phenol and 1500 pounds of 40 percent formaldehyde are used per ton of product made. Alternate reactants include meta-cresol, resorcinol, and xylenols. Yields are 90 percent or better, with the average plant producing six tons per hour.

D. Emission Rates:

The production unit or clad kettle is the primary source of atmospheric pollutants from phenolic resin manufacture. During the polymerization reaction, pollutants escape through the condenser, vacuum line, sample ports, and vents. When the reactions become too exothermic, a mixture of the hydrocarbons used in the production of the resins is vented through the safety blow-offs. Table V-33 presents uncontrolled and controlled hydrocarbon emissions from synthetic resins manufacture.

TABLE V-33

HYDROCARBON EMISSIONS FROM PHENOLIC RESIN MANUFACTURE

Type of Operation and Control	# Control	Hydrocarbon Emissions (Based on 52,560 tons/yr)			
		lbs/ton	kg/MT	lbs/hr	kg/hr
Production Unit, Uncontrolled	0	7.5	3.8	45	20.41
Production Unit, With Flare	99	.075	.038	.45	.20

E. Control Equipment:

Hydrocarbon emissions from the production unit are best controlled by use of an incinerator or a flare, with efficiencies approaching 99 percent. The controlled and uncontrolled emissions from this source are shown in Table V-33.

F. New Source Performance Standards and Regulation Limitations:

New Source Performance Standards (NSPS): No "New Source Performance Standards" have been promulgated for synthetic resins manufacture.

State Regulations for New and Existing Sources: Currently, hydrocarbon emission regulations are patterned after Los Angeles Rule 66 and Appendix B type legislation. Organic solvent useage is categorized by three basic types. These are, (1) heating of articles by direct flame or baking with any organic solvent, (2) discharge into the atmosphere of photochemically reactive solvents by devices that employ or apply the solvent, (also includes air or heated drying of articles for the first twelve hours after removal from #1 type device) and (3) discharge into the atmosphere of non-photochemically reactive solvents. For the purposes of Rule 66, reactive solvents are defined as solvents of more than 20% by volume of the following:

1. A combination of hydrocarbons, alcohols, aldehydes, esters, ethers or ketones having an olefinic or cyclo-olefinic type of unsaturation: 5 per cent
2. A combination of aromatic compounds with eight or more carbon atoms to the molecule except ethylbenzene: 8 per cent
3. A combination of ethylbenzene, ketones having branched hydrocarbon structures, trichloroethylene or tolune: 20 per cent

Rule 66 limits emissions of hydrocarbons according to the three process types. These limitations are as follows:

Process	lbs/day	& lbs/hour
1. heated process	15	3
2. unheated photochemically reactive	40	8
3. non-photochemically reactive	3000	450

Appendix B (Federal Register, Vol. 36, No. 158 - Saturday, August 14, 1971) limits the emission of photochemically reactive hydrocarbons to 15 lbs/day and 3 lbs/hr. Reactive solvents can be exempted from the regulation if the solvent is less than 20% of the total volume of a water based solvent. Solvents which have shown to be virtually unreactive are, saturated halogenated hydrocarbons, perchloroethylene, benzene, acetone and c_1-c_5n-paraffins.

For both Appendix B and Rule 66 type legislation, if 85% control has been demonstrated the regulation has been met by the source even if the lbs/day and lbs/hour values have been exceeded. Most states have regulations that limit the emissions from handling and use of organic solvents. Alabama, Connecticut and Ohio have regulations patterned after Los Angeles Rule 66. Indiana and Louisiana have regulations patterned after Appendix B. Some states such as North Carolina have an organic solvent regulation which is patterned after both types of regulations.

Table V-34 presents controlled and uncontrolled emissions and limitations for phenolic resin manufacture.

TABLE V-34

HYDROCARBON EMISSIONS AND LIMITATIONS FROM PHENOLIC RESIN

Type of Operation and Control	% Control	Hydrocarbon Emissions (Based on 52,560 tons/yr)		Limitations[4] lbs/hr/kg/hr			
		lbs/hr	kg/hr	Heated		Unheated	
Production Unit, Uncontrolled	0	45	20.4	3	1.36	8	3.63
Production Unit, with Flare	99	.45	.20	3	1.36	8	3.63

Potential Source Compliance and Emission Limitations: Hydrocarbon emission limitations are not based on process weight. Phenolic resin manufacture typically has relatively large process weights and a relatively limited emission. For phenolic resin manufacture to be in compliance with the 3 lbs/hr and 8 lbs/hr limitation, flare control efficiencies of 93% and 82% respectively, must be maintained. Existing control technology is adequate for phenolic resin manufacture to be in compliance with state regulations.

The Environment Reporter was used to update emission limitations.

G. References:

The literature used to develop the discussion on phenolic resins is listed below:

(1) Hedley, W.H., Potential Pollutants from Petrochemical Processes, (Final Report), Monsanto Research Corporation, EPA Contract No. 68-02-0226, Task No. 9, December, 1973.

(2) Hahn, A.V.G., The Petrochemical Industry, McGraw-Hill Book Company, Inc., New York, 1970.

(3) Hopper, T.G., Impact of New Source Performance Standards on 1985 National Emissions from Stationary Sources, Volume II, (Final Report), The Research Corporation of New England, EPA Contract No. 68-02-1382, Task No. 3, October, 1975.

(4) Analysis of Final State Implementation Plans--Rules and Regulations, EPA, Contract 68-02-0248, July, 1972, Mitre Corporation.

Two additional sources were consulted but not directly used to develop the material presented in this section.

(5) Fallwell, W.F. "Phenolic, Urea Resins Demand Losing Steam," Chemical and Engineering News, August 13, 1973.

(6) "Acrylonitrile-Butadiene-Styrene (ABS) and Styrene-Acrylonitrile (SAN) are Utilizing about 80 Percent of Their Capacity," Chemical and Engineering News, September 22, 1969.

A. Source Category: VI Food and Agricultural Industry

B. Sub Category: Beer Processing

C. Source Description:

The manufacture of beer from grain is a multiple-step process. From the time the grain is harvested until the beer manufacturing process is complete the following events take place at the brewery:

1. melting of barley (softening of barley by soaking in water followed by kiln drying),
2. addition of corn, grit, rice,
3. conversion of starch to maltose by enzymatic processes,
4. separation of wort (liquid to be fermented) from grain,
5. hopping (addition of cones of the hop plant) and boiling of wort,
6. cooling of wort,
7. addition of yeast,
8. fermentation,
9. removal of settled yeast,
10. filtration,
11. carbonation,
12. aging, and
13. packaging.(2)6.5-1

This process is graphically detailed below:

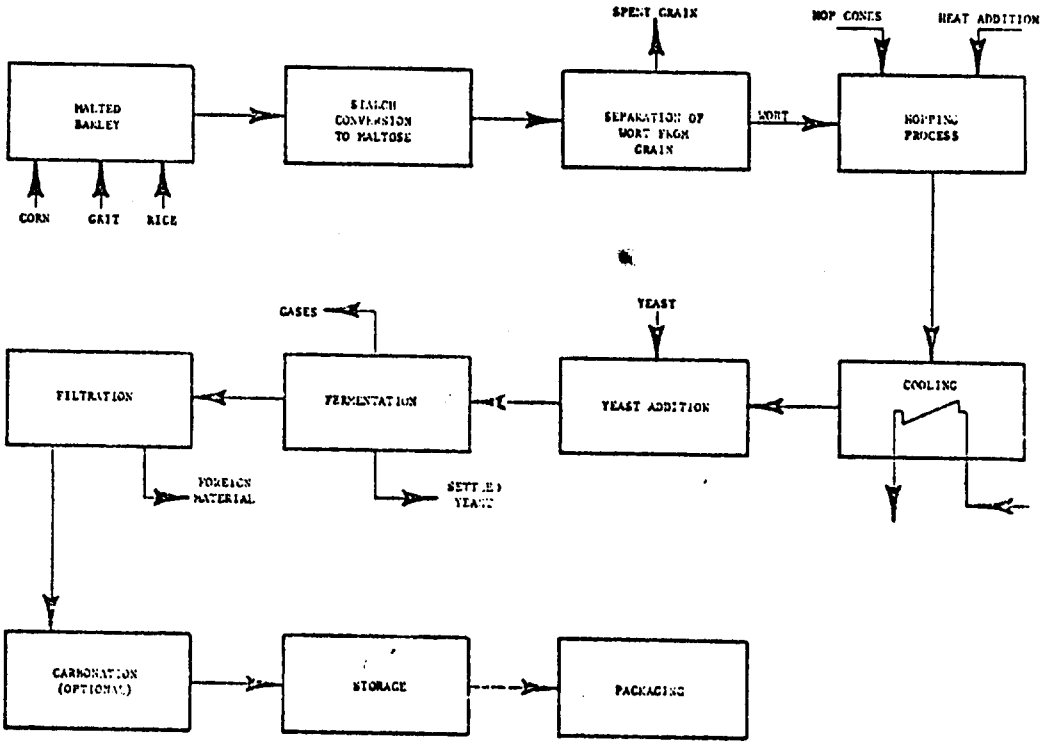

Figure VI-1: Beer Processing

Most of the beer manufacturing process takes place with the raw or processed materials in liquid form.

D. Emission Rate:

The manufacture of beer causes carbon dioxide, hydrogen, oxygen, and water vapor to be discharged into the atmosphere. The hydrocarbon emission rate may be approximated by assuming that 1 percent by weight of spent grain is emitted as hydrocarbon. Assuming the grain loses 20 percent of its weight during the manufacturing process, for every pound of spent grain, 1.25 pounds of raw grain are required. Therefore, each 1.25 pounds of input discharges 0.01 pounds of hydrocarbons. Based on the above, hydrocarbon emissions from beer processing are detailed below:

TABLE VI-1

HYDROCARBON EMISSIONS FROM BEER PROCESSING

Type of Operation and Control	% Control	Hydrocarbon Emissions[3]			
		lb/ton	kg/ton	(16.1 tons/hour) lb/hr	kg/hr
Beer Processing, Uncontrolled	0	2.63	1.32	42.3	19.2
Beer Processing, Incineration	99	0.0263	0.0132	.42	.19

E. Control Equipment:

The major hydrocarbon emission is ethyl alcohol and is controlled by incineration or absorption.

There is a limited quantity of ethyl alcohol from a typical processing plant. Incineration is accomplished by introducing ethyl alcohol fumes into a boiler air supply or by passing the fumes through an afterburner.(2)171-183

F. New Source Performance Standards and Regulation Limitations:

New Source Performance Standards (NSPS): No new source performance standards have been promulgated for the beer processing industry.

State Regulations for New and Existing Sources: Currently, hydrocarbon emission regulations are patterned after Los Angeles Rule 66 and Appendix B type legislation. Organic solvent useage is categorized by three basic types. These are, (1) heating of articles by direct flame or baking with any organic solvent, (2) discharge into the atmosphere of photochemically reactive solvents by devices that employ or apply the solvent, (also includes air or heated drying of articles for the first twelve hours after removal from #1 type device) and (3) discharge into the atmosphere of non-photochemically reactive solvents. For the purposes of Rule 66, reactive solvents are defined as solvents of more than 20% by volume of the following:

1. A combination of hydrocarbons, alcohols, aldehydes, esters, ethers or ketones having an olefinic or cyclo-olefinic type of unsaturation: 5 per cent
2. A combination of aromatic compounds with eight or more carbon atoms to the molecule except ethylbenzene: 8 per cent
3. A combination of ethylbenzene, ketones having branched hydrocarbon structures, trichloroethylene or toluene: 20 per cent

Rule 66 limits emissions of hydrocarbons according to the three process types. These limitations are as follows:

Process	lbs/day &	lbs/hour
1. heated process	15	3
2. unheated photochemically reactive	40	8
3. non-photochemically reactive	3000	450

Appendix B (Federal Register, Vol. 36, No. 158 - Saturday, August 14, 1971) limits the emission of photochemically reactive hydrocarbons to 15 lbs/day and 3 lbs/hr. Reactive solvents can be exempted from the regulation if the solvent is less than 20% of the total volume of a water based solvent. Solvents which have shown to be virtually unreactive are, saturated halogenated hydrocarbons, perchloroethylene, benzene, acetone and C_1-C_5 n-paraffins.

For both Appendix B and Rule 66 type legislation, if 85% control has been demonstrated the regulation has been met by the source even if the lbs/day and lbs/hour values have been exceeded. Most states have regulations that limit the emissions from handling and use of organic solvents. Alabama, Connecticut and Ohio have regulations patterned after Los Angeles Rule 66. Indiana and Louisiana have regulations patterned after Appendix B. Some states such as North Carolina have an organic solvent regulation which is patterned after both types of regulations.

Table VI-2 presents uncontrolled and controlled emissions and limitations for beer processing.

TABLE VI-2

HYDROCARBON EMISSIONS FROM BEER PROCESSING

Type of Operation and Control	% Control	Hydrocarbon Emissions (based on 16.1 tons/hour)		Hydrocarbon Limitations	
		lbs/hr	kg/hr	lbs/hr	kg/hr
				Heated	Unheated
Beer Processing, Uncontrolled	0	42.3	19.2	3/1.4	8/3.6
Beer Processing, Incineration	97	.42	.19	3/1.4	8/3.6

Potential Source Compliance and Emission Limitations: Hydrocarbon emission limitations are not based on process weight, but large processes such as beer processing can be controlled with incineration to meet emission limitations as described in Section D. For beer processing manufacture to meet the 3 lb/hour limitation, 81% control efficiency must be maintained. Existing control technology is adequate for beer processing manufacture to be in compliance with state regulations.

The Environment Reporter was used to update emission limitations.

G. References:

Literature used to develop the preceding discussion on beer processing include the following:

1. Danielson, J. A., Air Pollution Engineering Manual, Second Edition, AP-40, Research Triangle Park, North Carolina, EPA, May 1973.

2. Compilation of Air Pollutant Emission Factors (Second Edition), EPA, Publication No. AP-42, April 1973.

3. Impact of New Source Performance Standards on 1985 National Emissions from Stationary Sources, Volume II, Beer Processing, pp. 4, 6, 7.

4. Analysis of Final State Implementation Plans - Rules and Regulations, EPA, Contract 68-02-0248, July 1972, Mitre Corporation.

Joseph Padgett

961 Mu

5204

APTD 1334

Gary Dickerson

1023 Mu

5421

Arch, This is actually "Determining Input variables for calcs of Impact of NEW SPS's - Wk sheets for Food & Ag Industry" according to Gary [illegible] the project officer

A. Source Category: VI Food and Agricultural Industry

B. Sub Category: Cotton Ginning

C. Source Description:

Cotton ginning separates the constituents of freshly harvested cotton. After harvesting, the cotton is made up of the following materials:

1. cotton fiber,
2. cotton seed,
3. hulls,
4. sticks and stems, and
5. leaf and dirt.(1)22(2)30

The percentage of each of the five materials to the total varies with the harvesting method, and the ginning process varies depending upon the harvesting method.(1)2-7-2-20 (2)29,39

Until World War II, cotton was picked by hand. After World War II, the cotton industry began to mechanize in earnest. Today, most cotton is machine picked. Cotton picking is comprised of five categories:

1. hand picked,
2. hand snapped,
3. machine picked,
4. machine stripped,
5. machine scrapped.

Cotton ginning is a multistep process and has three major variations as detailed below:

COTTON PROCESSING

Step	Hand Picked	Machine Picked	Machine or Hand Snapped
1.	Unloading by Suction Telescope	Unloading by Suction Telescope	Unloading by Suction Telescope
2.	Initial Cleaning in Separator	Initial Cleaning in Separator	Initial Cleaning in Separator
3.	Drying in Tower Dryer	Drying in Tower Dryer	Boll Removal in "Boll Trap"
4.	Cleaning in Multi-cylinder Cleaner	Boll Removal in "Boll Trap"	Cleaning by "Airline Cleaner"
5.	Cotton and Seed Separated in Gin Stand	Cleaning in a Multi-Cylinder Cleaner	Drying in Tower Dryer
6.	Finished Product Available	Additional Drying in Tower Dryer	Cleaning in a Multi-cylinder Cleaner

(cont.)

Step	Hand Picked	Machine Picked	Machine or Hand Snapped
7.		Additional Cleaning in Multi-cylinder Cleaner	Removal of Burrs by "Burr Machine"
8.		Cotton and Seed Separated in Gin Stand	Stick Removal by "Stick Remover"
9.		Finished Product Available	Additional Drying in Tower Dryer
10.			Additional Cleaning in Multi-cylinder Cleaner
11.			Cotton and Seed Separated in Gin Stand
12.			Cleaning of Lint Cotton in Lint Cleaners & Condensers
13.			Finished Product Available

Cotton gin capacity may be as high as 30 bales/hour, and emission controls equipment may account for 3% to 10% of the facilities purchase price.(1)2-20

D. Emission Rate:

Particulate emissions from the cotton ginning process occur at a multitude of locations throughout the process. The discharge points are detailed in the following flow diagram:

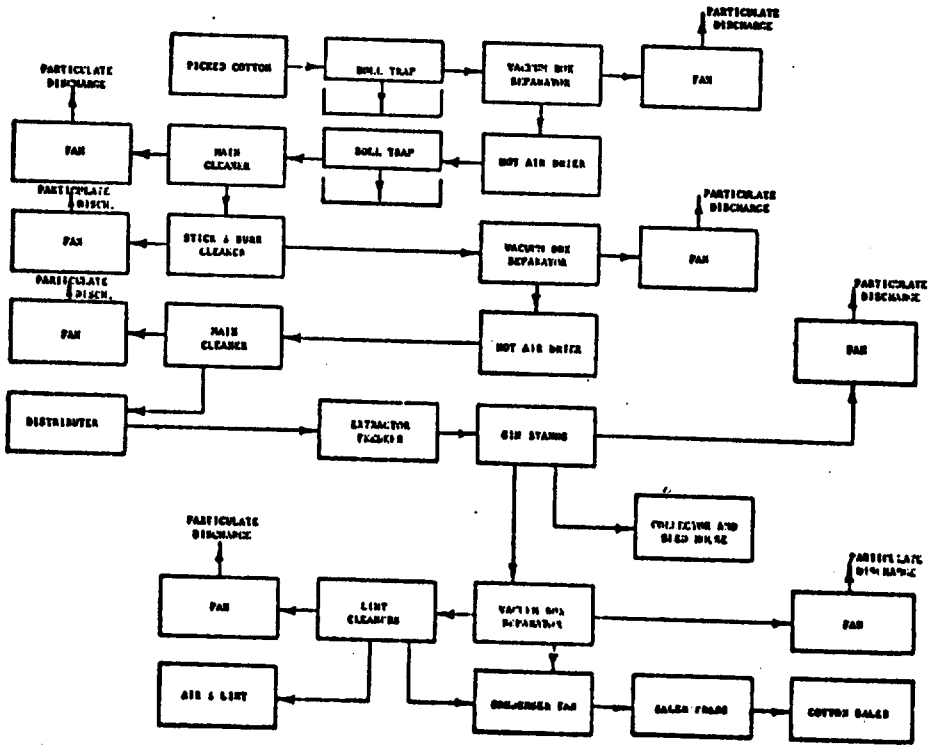

Figure VI-7: Cotton Ginning

In addition to the discharge points given in the above diagram, particulate emissions from the cotton ginning process can also be attributed to:

1. transfer equipment,
2. trash house,
3. incineration of trash, and
4. blown dust from improperly composted gin trash.(1)3-8

The actual particulate emission rate is a function of many variables including type of cotton, harvest time, and technique used. Typical emission rates for a specific gin are detailed in the following table:

TABLE VI-3

PARTICULATE EMISSIONS - MACHINE PICKED COTTON(1)3-4

Type of Operation & Control	% Control	lb/ton	kg/ton	lb/bale	kg/bale	lb/hr	kg/hr
Unloading, Uncontrolled	0	21.6	10.8	5.41	2.46	54.1	24.6
Unloading, Controlled	90	2.16	1.08	0.541	0.246	5.4	2.5
Multicylinder Cleaner & Stick Machine, Uncontrolled	0	0.56	0.28	0.14	0.064	1.4	0.6
Multicylinder Cleaner & Stick Machine, Controlled	90	0.056	0.028	0.014	0.0064	0.1	0.06
Multicylinder Cleaner Uncontrolled	0	0.32	0.15	0.08	0.037	0.8	0.4
Multicylinder Cleaner Controlled	90	0.032	0.015	0.008	0.0037	0.1	0.04
Trash Fan, Uncontrolled	0	0.64	0.32	0.16	0.073	1.6	0.7
Trash Fan, Controlled	90	0.064	0.032	0.016	0.0073	0	0.07
No. 1 Lint Cleaners, Uncontrolled	0	55.7	27.9	13.92	6.33	139.	63.3
No. 1 Lint Cleaners, Controlled	90	5.57	2.79	1.39	0.633	13.9	6.3
No. 2 Lint Cleaners, Uncontrolled	0	22.5	11.3	5.62	20.55	56.2	25.5
No. 2 Lint Cleaners, Controlled	90	2.25	1.13	0.562	0.255	5.6	2.6
Battery Lint Cleaners, Uncontrolled	0	8.4	4.2	2.10	0.955	21.0	9.6
Battery Lint Cleaners, Controlled	90	0.84	0.42	0.210	0.0955	2.1	1.0
Lint Cleaner Waste, Uncontrolled	0	10.2	5.1	2.55	1.16	25.5	11.6
Lint Cleaner Waste Controlled	90	1.02	0.51	0.255	0.116	2.6	1.2

Based on 10 bales/hr of lint cotton at 500 lbs/bale of lint cotton

E. Control Equipment:

Many types of equipment are used to control emissions from the cotton ginning process. Equipment selected will to some extent depend on whether or not an existing gin is being retrofitted or if a new gin is to be constructed.

Presently at least six (6) types of equipment are used in controlling emissions from gins, including:

1. settling chambers,
2. large diameter cyclones,
3. small diameter cyclones,
4. filters,
5. baghouses, and
6. screen wire lint cages.(1)4-1-4-5

Settling chambers find some use on existing gins but are not recommended for new gins because of the difficulty of maintaining the chambers and their relatively large size.[1]4-1

Large diameter cyclones are no longer used because they are not as efficient as the small diameter cyclones. The large diameter cyclone has been used with a degree of success on older gin facilities; however, the small diameter cyclone is only used to control emissions from the high pressure air discharges of a gin. Tests on small diameter cyclones show they are about 99% efficient.[1]4-2,[2]2 9-38

The low pressure air discharges of a gin facility may be controlled using various types of filters, including in-line filters located in duct work consisting of fine mesh wire screen. Another type of filter is similar to that just described but instead of a wire mesh as the filtering medium, foam pads are used. The pressure drop through the foam is quite high, and cleaning of the foam is difficult.[1]4-3-4-4

Baghouses can be used to control particulate emissions from the low pressure portion of new cotton gins. Installation and maintenance are expensive however.[1]4-2-4-3

Lint cages consist of a cage made of wire screen and placed over the low pressure exhaust system. In-line filters have generally replaced the lint cages.[1]4-5

Two new systems are being developed. One is for trash handling, the small diameter trash system, and the monoflow system for handling almost all gin emissions simultaneously.

The small diameter trash system reduces the amount of air required in handling gin trash by about a factor of 10. In reducing the volume of air used, the amount of air that has to be cleaned is also reduced.[1]4-5

The monoflow system was developed at the USDA Mesille Park Laboratory. In the monoflow system, the air follows the cotton through most of the ginning process. Some of the air is cycled through the system more than once and before discharge to the atmosphere is cleaned by small-diameter cyclones and in-line filters.[1]4-5-4-6

F. New Source Performance Standards and Regulation Limitations:

New Source Performance Standards (NSPS): No new source performance standards have been promulgated for cotton ginning.

State Regulations for New and Existing Sources: Particulate emission regulations for varying process weight rates are expressed differently from state to state. There are four types of regulations that are applicable to gypsum production. The four types of regulations are based on:

1. concentration,
2. control efficiency,
3. gas volume,
4. process weight.

Concentration Basis: Alaska, Delaware, Pennsylvania, Washington and New Jersey are representative of states that express particulate emission limitations in terms of grains/standard cubic foot and grains/dry standard cubic foot for general processes. The limitations for these five states are:

Alaska	-	0.05 grains/standard cubic foot
Delaware	-	0.20 grains/standard cubic foot
Pennsylvania	-	0.04 grains/dry standard cubic foot, when gas volume is less than 150,000 dscfm
Pennsylvania	-	0.02 grains/dry standard cubic foot, when gas volumes exceed 300,000 dscfm
Washington	-	0.20 grains/dry standard cubic foot
Washington	-	0.1^ grains/dry standard cubic foot (new)
New Jersey	-	0.02 grains/standard cubic foot

Control Efficiency Basis: Utah requires general process industries to maintain 85% control efficiency over the uncontrolled emissions.

Gas Volume Basis: Texas expresses particulate emission limitations in terms of pounds/hour for specific flow rates expressed in actual cubic feet per minute. The Texas limitations for particulates are as follows:

1	-	10,000 acfm	-	9.11 lbs/hr
10,000	-	100,000 acfm	-	38.11 lbs/hr
10^5	-	10^6 acfm	-	158.6 lbs/hr

Process Weight Rate Basis for New Sources: Several states have general process limitations for new sources. For new sources with a process weight of 5000 lbs/hr, Illinois is representative of the most restrictive, 4.2 lbs/hr (1.9 kg/hr) and New Hampshire is representative of the least restrictive, 9.4 lbs/hr (4.3 kg/hr).

Process Weight Rate Basis for Existing Sources: The majority of states, express particulate process limitations in terms of pounds per hour as a function of a specific process weight rate. For a process weight rate of 5000 lbs/hr, Colorado is representative of the most restrictive limitation, 6.3 lbs/hr (2.9 kg/hr) and Virginia is representative of the least restrictive limitation, 7.6 lbs/hr (3.4 kg/hr).

Process Weight Rate Basis for Specific Sources: Alabama, Georgia, South Carolina and Tennessee have specific regulations for cotton ginning. Alabama's restriction for a 10 bale/hour operation is 7.7 lbs/hr (3.5 kg/hr). Georgia's restriction is 22.1 lbs/hr (10.0 kg/hr), Tennessee's restriction is 7.7 lbs/hr (3.5 kg/hr) and South Carolina's restriction is 14.4 lbs/hr (6.5 kg/hr).

Table IV-4 presents uncontrolled and controlled emissions and limitations from cotton ginning.

TABLE VI-4

PARTICULATE EMISSIONS AND LIMITATIONS
FROM COTTON GINNING

Type of Operation and Control	% Control	Emissions lbs/hr	Emissions kg/hr	Limitations lbs/hr/kg/hr						
				New Sources		Existing Sources				
				Ill.	N.H.	Col.	Vir.	Ut.	Ala.	Georgia
Unloading, Uncontrolled	0	54.1	24.6	4.2/1.9	9.4/4.3	6.3/2.9	7.6/3.4	8.2/3.7	7.7/3.5	22.1/10.0
Unloading, Controlled	90	5.4	2.5	4.2/1.9	9.4/4.3	6.3/2.9	7.6/3.4		7.7/3.5	22.1/10.0
Multicylinder Cleaner & Stick Machine, Uncontrolled	0	1.4	0.6	4.2/1.9	9.4/4.3	6.3/2.9	7.6/3.4	.2/.09	7.7/3.5	22.1/10.0
Multicylinder Cleaner & Stick Machine, Controlled	90	0.1	0.06	4.2/1.9	9.4/4.3	6.3/2.9	7.6/3.4		7.7/3.5	22.1/10.0
Multicylinder Cleaner, Uncontrolled	0	0.8	0.4	4.2/1.9	9.4/4.3	6.3/2.9	7.6/3.4	.1/.05	7.7/3.5	22.1/10.0
Multicylinder Cleaner, Controlled	90	0.1	0.04	4.2/1.9	9.4/4.3	6.3/2.9	7.6/3.4		7.7/3.5	22.1/10.0
Trash Fan, Uncontrolled	0	1.6	0.7	4.2/1.9	9.4/4.3	6.3/2.9	7.6/3.4	.2/.09	7.7/3.5	22.1/10.0
Trash Fan, Controlled	90	0.2	0.07	4.2/1.9	9.4/4.3	6.3/2.9	7.6/3.4		7.7/3.5	22.1/10.0
No. 1 Lint Cleaner, Uncontrolled	0	139.	63.3	4.2/1.9	9.4/4.3	6.3/2.9	7.6/3.4	80.9/9.5	7.7/3.5	22.1/10.0
No. 1 Lint Cleaner, Controlled	90	13.9	6.3	4.2/1.9	9.4/4.3	6.3/2.9	7.6/3.4		7.7/3.5	22.1/10.0
No. 2 Lint Cleaner, Uncontrolled	0	56.2	25.5	4.2/1.9	9.4/4.3	6.3/2.9	7.6/3.4	8.4/3.8	7.7/3.5	22.1/10.0
No. 2 Lint Cleaner, Controlled	90	5.6	2.6	4.2/1.9	9.4/4.3	6.3/2.9	7.6/3.4		7.7/3.5	22.1/10.0
Battery Lint Cleaner, Uncontrolled	0	21.0	9.6	4.2/1.9	9.4/4.3	6.3/2.9	7.6/3.4	3.2/1.5	7.7/3.5	22.1/10.0
Battery Lint Cleaner, Controlled	90	2.1	1.0	4.2/1.9	9.4/4.3	6.3/2.9	7.6/3.4		7.7/3.5	22.1/10.0
Lint Cleaner Waste, Uncontrolled	0	25.5	11.6	4.2/1.9	9.4/4.3	6.3/2.9	7.6/3.4	3.8/1.7	7.7/3.5	22.1/10.0
Lint Cleaner Waste, Controlled	90	2.6	1.2	4.2/1.9	9.4/4.3	6.3/2.9	7.6/3.4		7.7/3.5	22.1/10.0

Potential Source Compliance and Emission Limitations: Cotton ginning operations are different from facility to facility and their emissions depend on the quality of the harvested cotton. From Table VI-4, it can be concluded that cotton ginning operations need control to meet existing limitations. The Environmental Reporter was used to update emission limitations.

G. References:

Literature used to develop the preceding discussion on cotton ginning include the following:

1. Background Information for Establishment of National Standards of Performance for New Sources, Cotton Ginning Industry (Draft), Environmental Engineering, Inc., EPA, Contract No. CPA 70-142, Task Order No. 6, July 15, 1971.

2. Control and Disposal of Cotton-Ginning Wastes, National Center for Air Pollution Control and Agricultural Engineering Research Division, Public Health Service Publication No. 999-AP-31, May 3 and 4, 1966.

A. Source Category: VI Food and Agricultural Industry

B. Sub Category: Deep Fat Frying

C. Source Description:

The food processing industry uses deep fat frying to prepare potato chips, french fries, doughnuts, seafood, corn chips, extruded products, nut meats, onion rings, fritters, chicken parts, and Chinese foods. During 1970, total production of the above items was 7×10^9 pounds.(1)2-4

The deep fat frying industry is divided into five categories according to the following:

1. snack foods -- potato chips, doughnuts, cheese and corn chips, etc.,
2. french fried potatoes,
3. seafood,
4. fried pies,
5. poultry parts, onion rings, Chinese noodles and egg rolls, etc.

Deep fat frying is done in stainless steel vats that hold upwards of 200 cubic feet (~1500 gallons). The oil in the vat is kept between 350°F and 400°F. The raw food to be fried is lowered into the vat by a conveyor and the oil is circulated in the vat with a stirring device or externally mounted pump. A continuation of the conveyor system removes the fried food and transports it to the packing operation.

Not all foods that are deep fat fried are cooked to completion by the frying process. As an example, breaded fish products are cooked long enough to "set" the breading. The fish itself is raw and must be cooked by the purchaser before consuming.

The location of the various facilities for the five (5) previously mentioned processing categories is not necessarily dependent upon population centers. However, for products that spoil easily, such as potato chips and doughnuts, processing facilities are located near areas of high consumption (population centers). Products that are stored in a frozen state need not be manufactured near areas of high consumption. In these cases, the processing facility is located near the source of raw material.

Of the total yearly production of deep fat fried items, about 50% of the total is attributed to potato chip and doughnut processing.(1)2-1 Potato chip processing is concentrated primarily in densely populated, industrial areas. About 72% (1966) of the processing plants are located in 5 of 9 regions of the United States:(1)2-5,2-6 (East, North Central, Midwest, Midcentral, and West Coast)

A distribution of the deep fat frying industry by region is presented below:

Region	Percent of National Production
1. New England	8
2. East	18
3. North Central	15
4. Southeast	8
5. Midwest	17
6. Mid-central	12
7. Southwest	8
8. Rocky Mountain	4
9. West Coast	10

The potato chips are cooked in vegetable oil and the type used depends upon the season of the year. The two major types of oil are cottonseed and sunflower seed oil. In 1970, approximately 432 x 10^6 pounds of potato chips[1]2-4 were produced.

About 73% of doughnut production is consumed in the northeastern portion of the country.[1]2-7 Doughnuts are cooked in either vegetable oil or animal fat. In 1970, 521 x 10^6 pounds of doughnuts were produced, and this required the use of 130 x 10^6 pounds of oil and lard.

The other 50% of the deep fat fried industry is devoted to the other items in the five previously mentioned categories. Seafood is usually fried in soybean oil. Whenever animal fats are used for frying, they are generally hydrogenated and deodorized.[1]1-2 During 1970, the consumption of oil and fat from all items except potato chips and doughnuts was 418 x 10^6 pounds.

The relative process weights for the five categories as well as oil/fat types are detailed below:[1]2-4

Category	Total 1970 Production	Type of Oil/Fat	Oil Fat Consumption as Product Content
Snack Foods -			
Potato Chips	960 x 10^6 lbs	Ctnsd,Snfl Sd	432 x 10^6 lbs
Doughnuts	521 x 10^6 lbs	Veg Oil,Anim Fat	130 x 10^6 lbs
Corn Chips	155 x 10^6 lbs	-	70 x 10^6 lbs
French Fried Potatoes	1800 x 10^6 lbs	-	144 x 10^6 lbs
Seafood	443 x 10^6 lbs	Soybean, Etc.	30 x 10^6 lbs
Fried Pies			
Poultry Parts, Onion Rings, Chinese Noodles, Egg Rolls, etc.	-	-	250 x 10^6 lbs

D. Emission Rate:

Little quantitative information has been accumulated on hydrocarbon emissions from the deep fat frying processes. During the cooking process, distillation of the oils light ends occurs.[2]799 Particulate emissions consist of smoke from overheated oil and droplets of oil. Particulate discharges occur during cooking of high moisture content foods such as potatoes.[1]3-3,[2]799-800

The amount and type of emissions from deep fat frying will vary with the equipment used and the raw food to be fried. Raw food varies in moisture content from about 10 percent for snack foods to a high of about 75 percent for potato chips and french fries.[1]3-2,[2]799 Upon emersion into the hot (350°F to 400°F) oil, the water in the raw food turns to steam and bubbles through the oil. This process causes some of the oil to be "steam distilled."[2]800

Estimated emission rates have been developed by assuming that the emission rates will be similar to those for the manufacture of vegetable oil. The vegetable oil emission factor is 38 lb/ton of oil manufactured.

The amount of oil absorbed by the various types of food is given in tabular form at the end of the preceding section. Assuming the hydrocarbon emission rate of 38 lbs/ton of vegetable oil, the following emission rates are presented the various food products[3]4 in Table VI-5.

TABLE VI-5

HYDROCARBON EMISSIONS FROM DEEP FAT FRYING

Type of Operation and Control	% Control	Hydrocarbon Emissions				Based on
		lb/ton	kg/ton	lb/hr	kg/hr	
Snack Foods						
Potato Chips, Uncontrolled	-	17.1	8.6	102.6	46.5	6 short ton/hr
Potato Chips, Controlled	99	.2	.09	1.0	.5	5.4 metric ton/hr
Doughnuts, Uncontrolled	-	9.4	4.7	4.7	2.1	.5 short ton/hr
Doughnuts, Controlled	99	.09	.05	.05	.02	.45 metric ton/hr
Corn Chips, Uncontrolled	-	17.2	8.6	103.2	46.8	6 short ton/hr
Corn Chips, Controlled	99	.2	.09	1.0	.5	5.4 metric ton/hr
Fr Fr Potatoes, Uncontrolled	-	3.0	1.5	18.2	8.3	6 short ton/hr
Fr Fr Potatoes, Controlled	99	.03	.02	.2	.08	5.4 metric ton/hr
Seafood, Uncontrolled	-	2.6	1.3	1.9	.9	0.75 short ton/hr
Seafood, Controlled	99	.03	.01	.02	.009	0.68 metric ton/hr

E. Control Equipment:

Several types of control devices, either singly or in parallel with each other, can be used to control hydrocarbon emissions. Equipment normally used, includes:

1. Afterburners,
2. Catalytic oxidizers,
3. Scrubbers.

The typical afterburner installation controls hydrocarbon emissions by oxidizing the hydrocarbons in a flame and thereby converting the hydrocarbons to acceptable hydrogen or carbon compounds. One drawback of this type of control is that fuel must be purchased and burned in the afterburner.(1)p5-5 Figure VI-8 shows a typical afterburner control system.

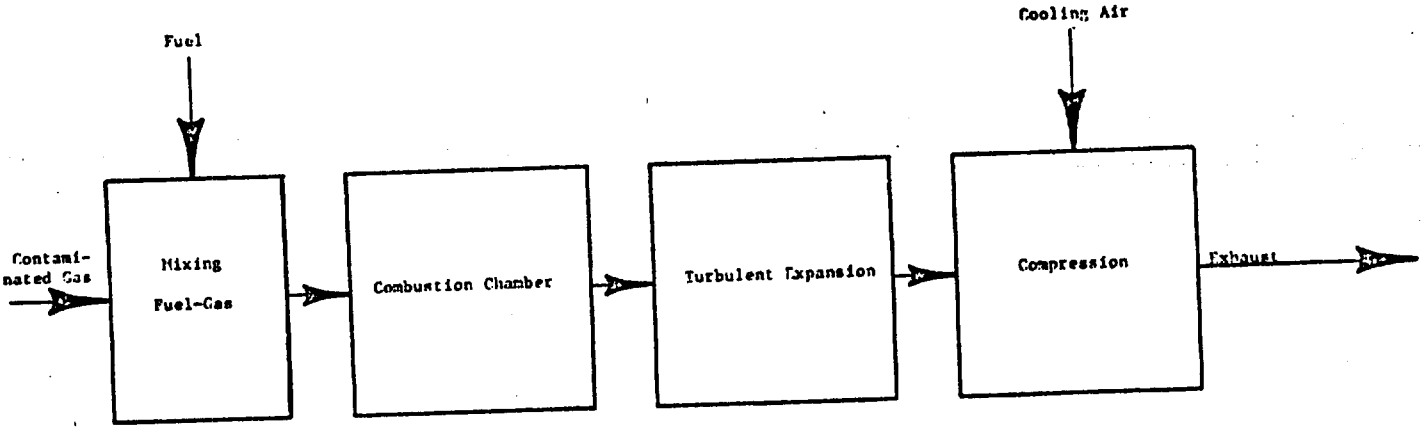

Figure VI-8: Typical Hydrocarbon Afterburner Emission Control System for Control of Hydrocarbon Emissions

The catalytic oxidizer is similar to an afterburner in that the temperature of the hydrocarbons is increased. At the proper temperature, the hydrocarbons are oxidized. The process usually occurs in two steps. The first is to increase the temperature of the entering hydrocarbons to 600 or 800°F by heating them in a burner with fossil fuel. After this first heating the second step is to pass them through a catalyst bed. Upon interacting with the catalyst, the hydrocarbons increase their temperature and are thus oxidized. Catalytic oxidizers have several disadvantages including initial cost, high maintenance costs, and generation of new compounds that may be more troublesome than the original pollutants.(1,p5-3,5-4) A typical catalytic oxidation process is outlined below.

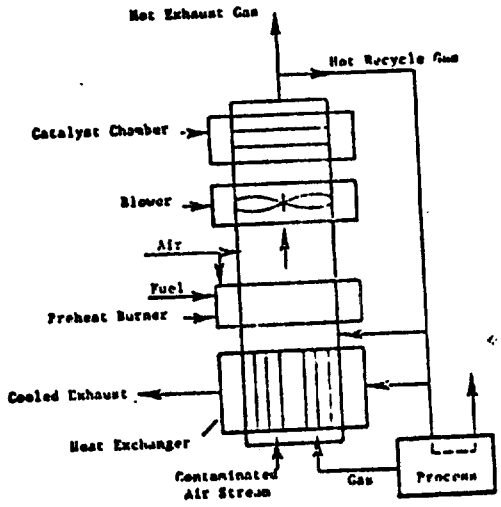

Figure VI-9: Typical Catalytic Oxidizer Hydrocarbon Emission Control System for Control of Hydrocarbon Emissions

Wet scrubbers are only practical for the removal of hydrocarbons that are dissolved or condensed by the water. A major drawback to scrubbers is the disposal of the contaminated wash water. This water/oil mixture must be suitably treated before discharge.[1,p5-2]

F. New Source Performance Standards and Emission Limitations:

New Source Performance Standards (NSPS): No new source performance standards have been proposed for the deep fat frying industry.

State Regulations for New and Existing Sources: No states have adopted regulations to limit emissions from deep fat frying. States that have "odor" and "nuisance" regulations could enforce these to control sources with excessive emissions.

G. References:

To develop the information in this section concerning deep fat frying hydrocarbon emissions, the following references were used:

1. Background Information for Establishment of National Standards of Performance for New Sources, Deep Fat Frying, Walden Research Corporation, EPA Contract CPA 70-165, Task Order No. 6, October 1971.

2. Danielson, S. A., Air Pollution Engineering Manual, Second Edition, AP-40, Research Triangle Park, North Carolina, EPA, May, 1973.

3. Hopper, Thomas G., Impact of New Source Performance Standards on 1985 National Emissions from Stationary Sources, Volume II, Deep Fat Frying, pp 1-4, 1-4.

4. ASHRAE Handbook & Product Directory 1975 Equipment, American Society of Heating, Refrigerating, and Air Conditioning Engineers, Inc., New York, N. Y., 1975.

A. Category: VI Food and Agricultural Industry

B. Sub Category: Direct Firing of Meats

C. Source Description:

The direct firing of meats is the process of using an open flame to directly cook meat for human consumption. Charcoal broiling is one example of direct firing of meats.(1)1

Natural gas, charcoal brickettes, or charcoal are the fuels used to supply the necessary heat. Some direct firing of meats also takes place on electric grills. Some grilling operations use a special technique to simulate the effects of charcoal using only natural gas as the fuel. In this technique, a bed of blocks having a consistency similar to pumice are placed between the heat source and the food to be cooked. The blocks act like charcoal.(5)4

Direct firing of meats does not occur on a continuous basis. In general, there are two peak periods daily for direct firing of meats, the first being lunch time and the second dinner time.(1)2

D. Emission Rate:

A typical direct firing operation emits both particulates and hydrocarbons. The particulate emission rate for a typical fast food restaurant is presented in Table VI-7, assuming that the restaurant is operated at peak capacity, 12 hours per day, 6 days per week, and 52 weeks yearly.(2)2

TABLE VI-7

PARTICULATE EMISSIONS FROM DIRECT FIRING OF MEATS

Type of Operation & Control	% Control	Particulate Emissions(3) (Based on Maximum Grill Capacity)			
		lb/ton	kg/ton	lb/hr	kg/hr
Direct Firing of Meats:					
Hardee's Hamburgers, Uncontrolled	0	NA	NA	0.63	0.29
Hardee's Hamburgers, Scrubber	90	NA	NA	0.063	0.029

Hydrocarbon emissions include methane, CH_4, and aldehydes. The hydrocarbon emission rate was developed similarly to the particulate rate as shown in Table VI-7A.

TABLE VI-7A

HYDROCARBON EMISSIONS FROM DIRECT FIRING OF MEATS

Type of Operation & Control	% Control	Hydrocarbon Emissions[3]6,[4]4 (Based on Maximum Grill Capacity)			
		lb/ton	kg/ton	lb/hr	kg/hr
Direct Firing of Meats					
Methane - CH_4					
Hardee's Hamburgers, Uncontrolled	0	NA	NA	1.50	.7
Hardee's Hamburgers, Scrubber	90	NA	NA	.15	.07
Aldehydes					
Hardee's Hamburgers, Uncontrolled	0	NA	NA	1.5	.7
Hardee's Hamburgers, Scrubber	57	NA	NA	.6	.3

E. Control Equipment:

Particulate matter has been controlled using a wet scrubber in the grill exhaust system.[3]

The emission of hydrocarbons can be controlled in several ways. One system presently being used is the oxidizer/scrubber.[3] Incineration can be employed successfully, but due to its expense, is seldom used.

F. New Source Performance Standards and Regulation Limitations:

New Source Performance Standards (NSPS): No new source performance standards have been promulgated for direct firing of meats.

State Regulations for New and Existing Sources: No states have adopted particulate or hydrocarbon regulations specifically for direct firing of meats. However, states do have the option of enforcing "odor","nuisance" and opacity regulations to regulate excessive emissions.

G. References:

References used in preparation of this summary on direct firing of meats include the following:

1. Hopper, Thomas G., Impact of New Source Performance Standards on 1985 National Emissions from Stationary Sources, Volume II, Industrial Factors, Direct Firing of Meats.

2. Hopper, Thomas G., Impact of New Source Performance Standards on 1985 National Emissions from Stationary Sources, Volume II, Emission Factors, Direct Firing of Meats.

3. Final Emission Tests Report, Hardee's Food Systems, Inc., Rocky Mount, North Carolina, Commonwealth Laboratory, Project No. 74-238-01, March 18, 1974.

4. Emission Tests Report, Hardee's Food Systems, Inc., Rocky Mount, North Carolina, Commonwealth Laboratory, Project No. 75-238-01, November 20, 1974.

5. Background Information for Stationary Source Categories, Provided by EPA, Joseph J. Sableski, Chief, Industrial Survey Section, Industrial Studies Branch, November 3, 1972.

A. Category: Food and Agricultural Industry

B. Sub Category: Feed Milling (Excluding Alfalfa)

C. Source Description:

The milling of cereal grains in the preparation of animal feeds is a multistep process. The objective of milling is reduction of whole cereal grain kernels into a predetermined-sized particle and seed portions. A typical cereal grain seed is composed of gluten, germ, and bran.(2)193

Gluten is grain protein. Germ is the seed of the grain, and bran is the outer skin of the grain.(2)193

In preparing the grain for animal feed production, several steps are required. The grain is first unloaded into storage bins. After being taken from the bins, the grain is cleaned.(2)198

The milling operation is accomplished in a hammer mill. As the grain passes through the hammer mill, it is struck by a multitude of swiftly moving hammers and plates. After being pulverized, the grain is screened to obtain a uniform size. Other types of mills are sometimes used, including the attrition mill and roller mill. (2)198-200, 3

After milling, the grain is mixed with other grains and materials to form a mixture of up to about 50 different components that form the animal feed.(2)200-201

Much animal feed is bonded together in tiny pellets. The pellets ensure that the animal consumes the correct proportion of nutrients. The milling process is described figuratively in Figure VI-10.(2)199-201

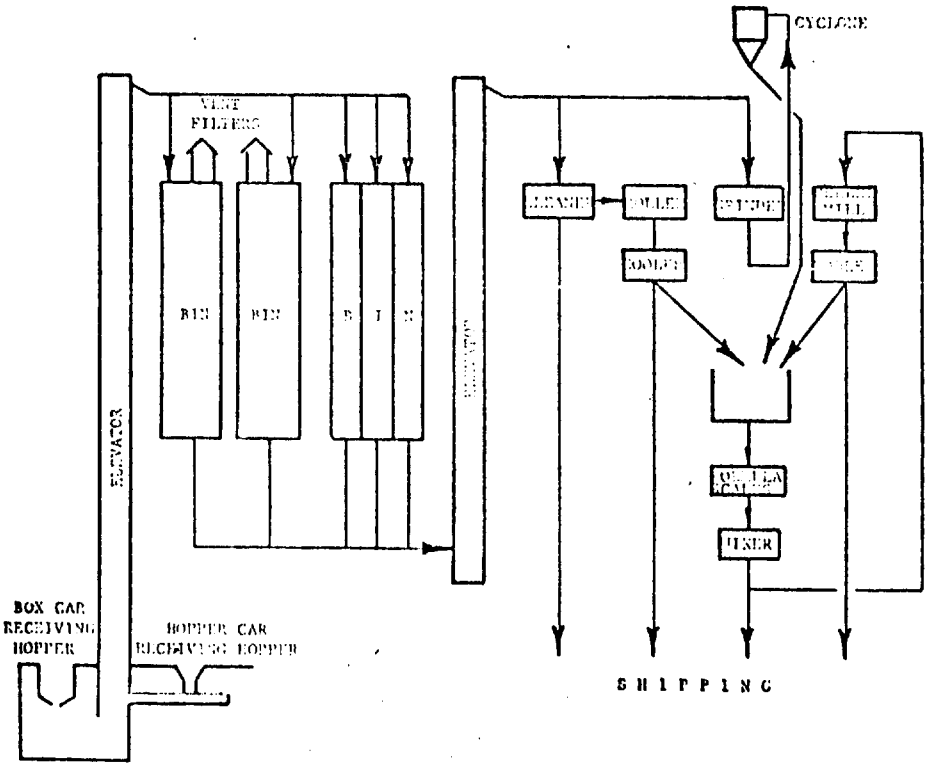

Figure VI-10: Typical Feed Milling Operation

D. Emission Rate:

Particulate emissions attributed to milling are primarily a result of handling raw grain. (1)25,(3)3-63-3-66 (4)V-16 Table VI-9 presents particulate emissions from feed milling. (1)24,(2)225

TABLE VI-9

PARTICULATE EMISSIONS FROM FEED MILLING

Type of Operation & Control	% Control	Particulate Emissions (Based on 5.1 tons/hr)			
		lb/ton	kg/ton	lb/hr	kg/hr
Milling, Uncontrolled	0	3.1	1.6	15.8	7.2
Milling, Hoods & Cyclones	90	0.31	.16	1.6	.7

E. Control Equipment:

Control equipment used for reduction or elimination of particulate emissions during grain milling vary depending on location and type of discharge. Hoods may be used to collect escaping products during milling operations, while direct discharges to the atmosphere are controlled via cyclones or fabric filters.(1)24,(2)225

F. New Source Performance Standards and Regulation Limitations:

New Source Performance Standards (NSPS): No New Source Performance Standards have been promulgated for feed milling.

State Regulations for New and Existing Sources: Particulate emission regulations for varying process weight rates are expressed differently from state to state. There are four types of regulations that are applicable to feed milling. The four types of regulations are based on:

1. concentration,
2. control efficiency,
3. gas volume, and
4. process weight.

Concentration Basis: Alaska, Delaware, Pennsylvania, Washington and New Jersey are representative of states that express particulate emission limitations in terms of grains/standard cubic foot and grains/dry standard cubic foot for general processes. The limitations for these five states are:

Alaska	-	0.05 grains/standard cubic foot
Delaware	-	0.20 grains/standard cubic foot
Pennsylvania	-	0.04 grains/dry standard cubic foot, when gas volume is less than 150,000 dscfm
Pennsylvania	-	0.02 grains/dry standard cubic foot, when gas volumes exceed 300,000 dscfm
Washington	-	0.10 grains/dry standard cubic foot
New Jersey	-	0.02 grains/standard cubic foot
Washington	-	0.20 grains/dry standard cubic foot
Washington	-	0.10 grains/dry standard cubic foot (new)
New Jersey	-	0.02 grains/standard cubic foot

Iowa has a regulation specifically for grain processing:

Iowa	-	0.10 grains/standard cubic foot

Wisconsin has a regulation specifically for grain processing:

Wisconsin	-	0.4 lbs/1000 lbs gas

Control Efficiency Basis: Utah requires general process industries to maintain 85% control efficiency over the uncontrolled emissions.

Gas Volume Basis: Texas expresses particulate emission limitations in terms of pounds/hour for specific stack flow rates expressed in actual cubic feet per minute. The Texas limitations for particulates are as follows:

1	-	10,000 acfm	-	9.11 lbs/hr
10,000	-	100,000 acfm	-	38.00 lbs/hr
10^5	-	10^6 acfm	-	158.6 lbs/hr

Process Weight Rate Basis for New Sources: Several states have adopted particulate emission limitations for new sources with a process weight rate of 10,200 lbs/hour. For new sources with this process weight rate, Massachusetts is representative of a most restrictive limitation, 5.1 lbs/hr (2.3 kg/hr) and New Hampshire is representative of a least restrictive limitation, 12.4 lbs/hr (5.6 kg/hr).

Process Weight Rate Basis for Existing Sources: The majority of states express general process limitations for existing sources in terms of lbs/hr for a wide range of process weight rates. For a process weight rate of 10,200 lbs/hr, Colorado is representative of a most restrictive limitation, 9.9 lbs/hr (4.5 kg/hr) and Virginia is representative of a least restrictive limitation, 12.2 lbs/hr (5.5 kg/hr).

Table VI-10 presents controlled and uncontrolled emissions and limitations from feed milling.

TABLE VI-10

PARTICULATE EMISSIONS AND LIMITATIONS FROM FEED MILLING

Type of Operation & Control	% Control	Emissions (Based on 5.1 lbs/hr) lbs/hr	kg/hr	Limitations lbs/hr / kg/hr New Sources MA	NH	Existing Sources CO	Vir.	UT 85%
Milling, Uncontrolled	0	15.8	7.2	5.1/2.3	12.4/5.6	9.9/4.5	12.2/5.5	2.4/1.1
Milling, Hoods & Cyclones	90	1.6	.7	5.1/2.3	12.4/5.6	9.9/4.5	12.2/5.5	2.4/1.1

Potential Source Compliance and Emission Limitations: Hood and cyclones are necessary to control feed milling operations to within existing particulate limitations

The Environment Reporter was used to update the emission limitations.

G. References:

Literature used in preparation of this summary on feed milling includes the following:

1. Background Information for Establishment of National Standards of Performance for New Sources, Grain Handling & Milling Industry (Draft), Environmental Engineering, Inc. and PEDCO Environmental Specialists, Inc., EPA, Contract No. CPA 70-142, Task Order No. 4, July 15, 1971.

2. Air Pollution Control Technology and Costs in Seven Selected Areas, Industrial Gas Cleaning Institute, EPA, Contract No. 68-02-0289, December 1973.

3. Technical Guide for Review and Evaluation of Compliance Schedules for Air Pollution Sources, PEDCO Environmental Specialists, Inc., EPA, Contract No. 68-02-0607, July 1973.

4. Exhaust Gases from Combustion and Industrial Processes, Engineering Science, Inc., EPA, Contract No. EHSD 71-36, October 2, 1971.

A. Source Category: VI Food and Agricultural Industry

B. Sub Category: Fertilizer-Ammonium Sulfate

C. Source Description:

Ammonium sulfate, $(NH_4)_2$ SO4, is a solid, crystalline salt used primarily as a fertilizer. It is also used in water treatment, pharmaceuticals, fermentation, food processing, fireproofing, and tanning.[3] Ammonium sulfate is produced according to the following reaction:

$$2NH_2 + H_2SO_4 \rightarrow (NH_4)_2SO_4$$

The production of ammonium sulfate is usually a by-product of some other manufacturing process. One of the largest single sources of ammonia for the manufacture of ammonium sulfate is coke manufacturing. The ammonia is recovered by absorption in dilute sulfuric acid. After combining with the sulfuric acid, the ammonia is recovered as ammonium sulfate.

Ammonium sulfate is recovered during the manufacture of hydrogen cyanide by the Andrussow process. The Andrussow process utilizes methane, ammonia, and air to produce the hydrogen cyanide. Unreacted ammonia from the process is recovered by stripping the product stream with sulfuric acid, thus forming amonium sulfate.[3]

D. Emission Rates:

It is assumed that 1% of the ammonium sulfate produced each year ends up as particulate emissions during the packaging process.[2]147

Particulate emission rates are presented in Table VI-11.

TABLE VI-11

PARTICULATE EMISSIONS FROM
AMMONIUM SULFATE FERTILIZER MANUFACTURE

Type of Operation & Control	% Control	Particulate Emissions			
		lb/ton	kg/ton	(based on 17 tons/hr) lb/hr	kg/hr
Ammonium Sulfate, Uncontrolled	0	20	10.0	334	159
Ammonium Sulfate, Wet Scrubber	95	1	0.5	16.7	7.6

E. Control Equipment:

Ammonium sulfate particles in a gas stream are removed with a wet scrubber or cyclone.[4] 1-2 Another method developed specifically for ammonium sulfate removal is covered by U. S. Patent 3,410,054 and was developed by W. Deiters. A sketch of the unit is provided below in Figure VI-6.

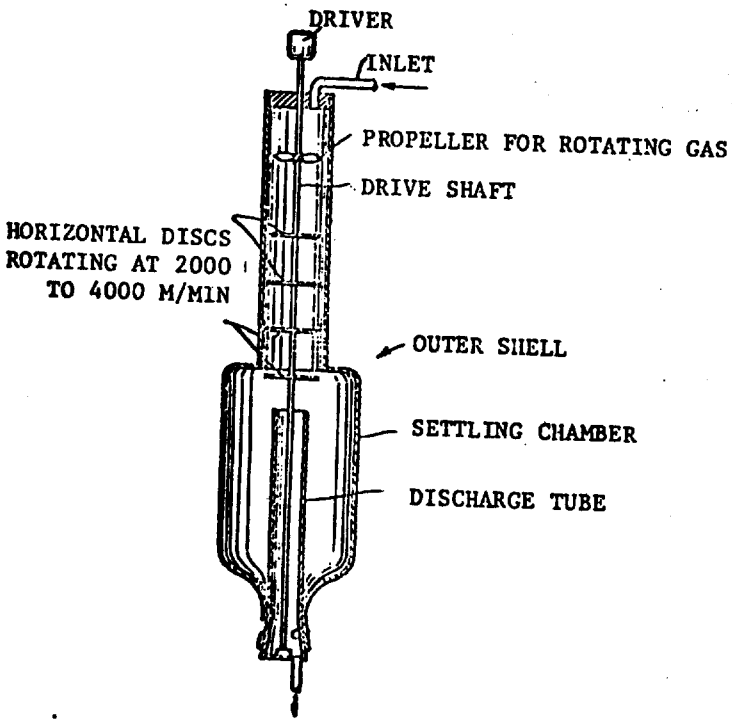

Figure VI-6: Device for Agglomeration of Ammonium Sulfate Particles in a Gas Stream, Patent No. 3,410,054 by W. Deiters

Under suitable conditions, this ammonium sulfate particulate collector discharges a gas that is completely free of the sulfate. This assumes that the inlet gas is a dry air -- NH_3 mixture and finely distributed ammonium sulfate aerosal.[1] 170-172

F. New Source Performance Standards and Regulation Limitations:

New Source Performance Standards (NSPS): No new source performance standards have been promulgated for ammonium sulfate manufacture.

State Regulations for New and Existing Sources: Particulate emission regulations for varying process weight rates are expressed differently from state to state. There are four types of regulations that are applicable to ammonium sulfate production.

The four types of regulations are based on:

1. concentration,
2. control efficiency,
3. gas volume, and
4. process weight.

Concentration Basis: Alaska, Delaware, Pennsylvania, Washington and New Jersey are representative of states that express particulate emission limitations in terms of grains/standard cubic foot and grains/dry standard cubic foot for general processes. The limitations for these five states are:

Alaska	-	0.05 grains/standard cubic foot
Delaware	-	0.20 grains/standard cubic foot
Pennsylvania	-	0.04 grains/dry standard cubic foot, when gas volume is less than 150,000 dscfm
Pennsylvania	-	0.02 grains/dry standard cubic foot, when gas volumes exceed 300,000 dscfm
Washington	-	0.20 grains/dry standard cubic foot
Washington	-	0.10 grains/dry standard.cubi foot (new)
New Jersey	-	0.02 grains/standard cubic foot

Control Efficiency Basis: Utah requires general process industries to maintain 85% control efficiency over the uncontrolled emissions.

Gas Volume Basis: Texas expresses particulate emission limitations in terms of pounds/hour for specific flow rates expressed in actual cubic feet per minute. The Texas limitations for particulates are as follows:

1	-	10,000 acfm	-	9.11 lbs/hr
10,000	-	100,000 acfm	-	38.00 lbs/hr
10^5	-	10^6 acfm	-	158.6 lbs/hr

Process Weight Rate for New Sources: Several states have adopted particulate emission limitations for new sources with a process weight rate of 34,000 lbs/hr. For new sources with this process weight rate, Massachusetts is representative of a most restrictive limitation, 12.3 lbs/hr (5.6 kg/hr) and New Hampshire is representative of a least restrictive limitation, 26.5 lbs/hour (12.0 kg/hr).

Process Weight Rate for Existing Sources: The majority of states express general process limitations for existing sources in terms of lbs/hour for a wide range of process weight rates. For a process weight rate of 34,000 lbs/hour, Colorado is representative of a most restrictive limitation, 20.8 lbs/hr (9.4 kg/hr) and Virginia is representative of a least restrictive limitation, 27.3 lbs/hr (12.4 kg/hr).

Table VI-12 presents the uncontrolled and controlled emissions and limitations from ammonium sulfate production.

TABLE VI-12

PARTICULATE EMISSIONS AND LIMITATIONS FOR AMMONIUM SULFATE PRODUCTION

Type of Operation and Control	% Control	Emissions (based on 17 tons/hr)		Limitations lbs/hr/kg/hr				
				New Sources		Existing Sources		
		lbs/hr	kg/hr	MA	NH	Col.	Vir.	UT 85% Control
Ammonium Sulfate, Uncontrolled	0	334.	159.	12.3/5.6	26.5/12.0	20.8/9.4	27.3/12.4	50.1/22.7
Ammonium Sulfate, Wet Scrubber	95	16.7	7.6	12.3/5.6	26.5/12.0	20.8/9.4	27.3/12.4	—

Potential Source Compliance and Emission Limitations: Ammonium sulfate production described in Section D, producing 17 tons/hr, requires a control device such as a wet scrubber to meet current particulate limitations.

The Environmental Reporter was used to update the emission limitations.

G. References:

Literature used to develop the preceding discussion on ammonium sulfate include the following:

1. Jones, H. R., Environmental Control in the Inorganic Chemical Industry, Park Ridge, New Jersey, Noyes Data Corporation, 1972.

2. Particulate Pollutant System Study, Volume I - Mass Emissions, Midwest Research Institute, EPA, Contract No. CPA 22-69-104, August 1, 1971.

3. Chemical Economics Handbook, Stanford Research Institute.

4. Hopper, Thomas G., Impact of New Source Performance Standards on 1985 National Emissions from Stationary Sources, Volume II - Emission Factors, Ammonium Sulfate.

5. "Air Pollution Problems at a Proposed Merseyside Chemical Fertilizer Plant: A Case Study," Atmospheric Environment, Vol. 2, pp. 35-48, Pergamon Press, 1968.

6. Jones, H. R., Fine Dust and Particulate Removal, Pollution Control Review No. 11, Noyes Data Corporation, 1972.

A. Source Category: VI Food and Agricultural Industry

B. Sub Category: Fertilizer-Ammonium Nitrate

C. Source Description:

Ammonium nitrate, NH_4NO_3, is manufactured by neutralizing nitric acid with liquid or gaseous ammonia. The nitric acid and ammonia are initially mixed in a neutralizer. The following chemical reaction takes place inside the neutralizer:

$$HNO_3 + NH_3 \rightarrow NH_4NO_3$$

The process is diagrammed in Figure VI-2.

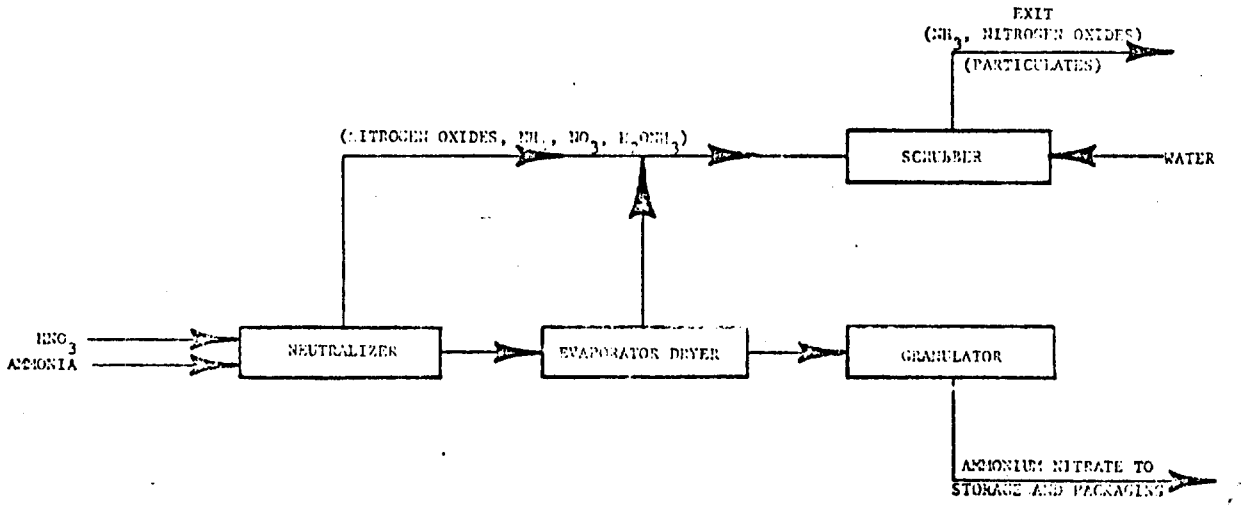

Figure VI-2: Process for the Manufacture of Ammonium Nitrate By Neutralization of Nitric Acid

The neutralizer's liquid product is transferred to an evaporator. After evaporation is completed, the ammonium nitrate is dried in a dryer. The by-products from these two operations, nitrogen oxides, ammonium nitrate, water, and ammonia are ducted to a wet scrubber.(2)113-114 The concentrated liquid ammonium nitrate is turned into solid particles by a process called prilling, which consists of air cooling liquid droplets of the ammonium nitrate as the droplets descend from the top of a special tower. The solid particles of ammonium nitrate that collect at the bottom of the tower are called prills.(5) The prills are dried further in a dryer which receives its heat input from an oil or gas burner unit.

After the ammonium nitrate is dried, the particles are transferred to a granulator and then to storage and packaging. Particulate emissions are discharged from the wet scrubber with the ammonia.(2)113-114

D. Emission Rate:

The emission rate of particulate matter from the manufacture of ammonium nitrate arises from evaporation, prilling, and bagging.

The particulate matter discharged during the manufacturing process and attributed to the evaporator is about 1 lb/ton of end product. The largest single source of particulate matter arising from the manufacturing process is the dryer. The rate is about 12 lb/ton of end product.

Some particulate matter is discharged during the bagging of the product. The amount discharged is about 1 lb/ton of end product. It can be assumed that about 1% of all the ammonium nitrate manufactured each year is discharged to the atmosphere.[1]ix-6 The particulate emissions are tabulated below:

TABLE VI-15

PARTICULATE EMISSIONS FROM
AMMONIUM NITRATE FERTILIZER MANUFACTURE

Type of Operation & Control	% Control	Particulate Emissions (Based on 365 short ton/day)			
		lbs/ Short Ton	kg/ Metric Ton	lbs/ hr	kg/ hr
Ammonium Nitrate Production					
Evaporator, Uncontrolled	0	10	4.1	152.	69.
Evaporator, Wet Scrubber	90[I]	1	.4	15.2	6.9
Dryer, Uncontrolled	0	120	49.7	1830.	832.
Dryer, Wet Scrubber	90[I]	12	5.0	183.	83.2
Bagging, Uncontrolled	0	10	4.1	152.	69.
Bagging, Wet Scrubber	90[I]	1	.4	15.2	6.9

[I] Assumed Value

E. Control Equipment

Control equipment consists of a wet scrubber through which the pollutants in the gases from the neutralizer, evaporator/dryer, and priller are passed. In addition to some particulate matter, the scrubber's discharge also contains ammonia and nitrogen oxides.

F. New Source Performance Standards and Regulation Limitations:

New Source Performance Standards (NSPS): No new source performance standards have been promulgated for the ammonium nitrate fertilizer production.

State Regulations for New and Existing Sources: Particulate emission regulations for varying process weight rates are expressed differently from state to state. There are four types of regulations that are applicable to ammonium nitrate manufacture. The four types of regulations are based on:

1. concentration,
2. control efficiency,
3. gas volume, and
4. process weight.

Concentration Basis: Alaska, Delaware, Washington and New Jersey are representative of states that express particulate emission limitations in terms of grains/standard cubic foot and grains/dry standard cubic foot for general processes. The limitations for these four states are:

Alaska	-	0.05 grains/standard cubic foot
Delaware	-	0.20 grains/standard cubic foot
Washington	-	0.20 grains/dry standard cubic foot
Washington	-	0.10 grains/dry standard cubic foot (new)
New Jersey	-	0.02 grains/standard cubic foot

Control Efficiency Basis: Utah requires general process industries to maintain 85% control efficiency over uncontrolled emissions.

Gas Volume Basis: Texas expresses particulate emission limitations in terms of pounds/hour for specific stack flow rates expressed in actual cubic feet per minute. The Texas limitations for particulates are as follows:

1	-	10,000 acfm	-	9.11 lbs/hr
10,000	-	100,000 acfm	-	38.00 lbs/hr
10^5	-	10^6 acfm	-	158.60 lbs/hr

Process Weight Rate Basis for Specific Sources: Pennsylvania has a regulation specifically for ammonium nitrate production. For a source with a process weight rate of 15.2 tons/hour, the maximum allowable emission is 0.9 lbs/hr (0.4 kg/hr) from the granulator.

Process Weight Rate for New Sources: Several states have adopted particulate emission limitations for new sources with a proces weight rate of 30,420 lbs/hour. For new sources with this process weight rate, Massachusetts is representative of a most restrictive limitation, 11.2 lbs/hr (5.1 kg/hr) and New Hampshire is representative of a least restrictive limitation, 24.6 lbs/hour (11.2 kg/hour).

Process Weight Rate Basis for Existing Sources: The majority of states express general process limitations for existing sources in terms of lbs/hour for a wide range of process weight rates. For a process weight

rate of 30,420 lbs/hour, Colorado is representative of a most restrictive limitation, 19.4 lbs/hour (8.8 kg/hr) and Virginia is representative of a least restrictive limitation, 22.5 lbs/hour (10.2 kg/hour).

Table VI-16 presents the uncontrolled and controlled emissions and limitations for ammonium nitrate.

TABLE VI-16

PARTICULATE EMISSIONS AND LIMITATIONS FOR AMMONIUM NITRATE MANUFACTURE

Type of Operation and Control	% Control	Emissions lbs/hr/kg/hr	Limitations				
			New Sources		Existing Sources		
			MA	NH	Col.	Vir.	VT 85%
Ammonium Nitrate							
Evaporator, Uncontrolled	0	152./69.	11.2/5.1	24.6/11.2	19.4/8.8	22.5/10.2	22.8/10.3
Evaporator, Wet Scrubber	90	15.2/6.9	11.2/5.1	24.6/11.2	19.4/8.8	22.5/10.2	
Dryer, Uncontrolled	0	1830./832.	11.2/5.1	24.6/11.2	19.4/8.8	22.5/10.2	275./125
Dryer, Wet Scrubber	90	183./83.2	11.2/5.1	24.6/11.2	19.4/8.8	22.5/10.2	
Bagging, Uncontrolled	0	152./69.	11.2/5.1	24.6/11.2	19.4/8.8	22.5/10.2	22.8/10.3
Bagging, Wet Scrubber	90	15.2/6.9	11.2/5.1	24.6/11.2	19.4/8.8	22.5/10.2	

Potential Source Compliance and Emission Limitations: Table VI-16A presents the degree of control necessary for ammonium nitrate operations as described in Section D to be in compliance with the state regulations listed in Table VI-16.

TABLE VI-16A

CONTROL AND COMPLIANCE FOR AMMONIUM NITRATE PRODUCTION

Type of Operation	% Control Necessary				
	MA	NH	Col.	Vir.	UT
Evaporator	93	84	87	86	85
Dryer	99	99	99	99	85
Bagging	93	84	87	86	85

Wet scrubbers are adequate control measures to reduce particulate emissions from ammonium nitrate particulate operations below the most restrictive limitations. The Environmental Reporter was used to update emission limitations.

G. References:

Literature used to develop the preceding discussion on ammonium nitrate include the following:

1. Emission Standards for the Phosphate Rock Processing Industry, Consulting Division, Chemical Construction Corporation, EPA, Contract No. CPA 70-156, July 1971.

2. Jones, H. R., Environmental Control in the Inorganic Chemical Industry, Park Ridge, New Jersey, Noyes Data Corporation, 1972.

3. Hopper, Thomas G., Impact of New Source Performance Standards of 1985 National Emissions from Stationary Sources, Volume II, Nitrate Fertilizers, p. 4, The Research Corporation of New England, EPA, Contract 68-02-1382, Task #3.

4. Chemical Economics Handbook, Stanford Research Institute.

5. Control Techniques for Nitrogen Oxides from Stationary Sources, U. S. Department of Health, Education and Welfare, National Pollution Control Administration Publication No. AP-67, March 1970.

6. Air Pollution Problems at a Proposed Merseyside Chemical Fertilizer Plant, A Case Study, Atmospheric Environment, Vol. 2, pp. 35-48, Pergamon Press, 1968.

7. Jones, H. R., Fine Dust and Particulates Removal, Pollution Control Review, No. 11, Noyes Data Corporation, 1972.

A. Source Category: VI Food and Agricultural Industry

B. Sub Category: Grain - Drying

C. Source Description:

Handling of grain in preparation for storage and processing is a complex operation requiring several steps for completion. After the grain is harvested and before it can be stored, it goes through the following seven-step procedure:

1. unloading from truck, rail, barge, ship,
2. cleaning,
3. drying,
4. turning,
5. blending,
6. separation, and
7. loading.(3)3-61 to 3-62

Grain received directly from the field contains up to 30 percent moisture.(2)8 If the moisture level is not properly controlled, the grain will spoil during storage. To prevent spoilage, the moisture content of corn is lowered to about 15%, and with soybeans is lowered to about 10%.(2)3,8 The drying process is time consuming because a typical dryer removes only about 5% moisture per pass.

Two types of dryers commonly used are the column and the rack dryer.(2)8-9

Initially, moist grain is fed to the dryer and heated. The grain is moved to another part of the dryer where it is allowed to cool. After cooling, the grain is discharged from the dryer. Figure VI-3 presents a column dryer, and Figure VI-4 presents a rack dryer.(2)8-9 The column dryer recirculates up to 60% of the exhaust, and this reduces energy consumption and the volume of effluent.(2)6-9

D. Emission Rate:

Particulate emissions from drying grain are dependent upon the type of grain and its dustiness.(2)20 Particulate is emitted to the atmosphere with the warm moist exhaust gases. With recirculation, the total particulate emitted from a column dryer is less than from a rack dryer performing the same function. In both cases, the discharges are composed of similar materials but in different proportions.(2)21

Particulate emissions from drying corn consist of grain dust and the outer filmy skins of the kernels, called "bee's wings." The bee's wings are heavy and large compared to the grain dust and make up the majority of the visible particulate emissions from drying.(2)20 Particulate emissions from drying soybeans consist of hulls, cracked grain, weed seeds, and field dust.(2)20-21 Table VI-17 presents the emissions from grain drying with column and rack dryers.

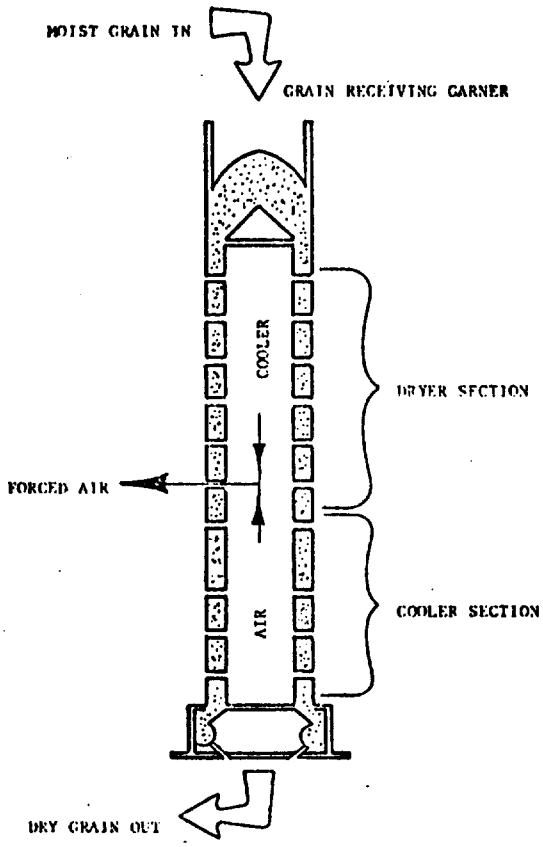

Figure VI-3: Typical Column Dryer Used in Drying Grain

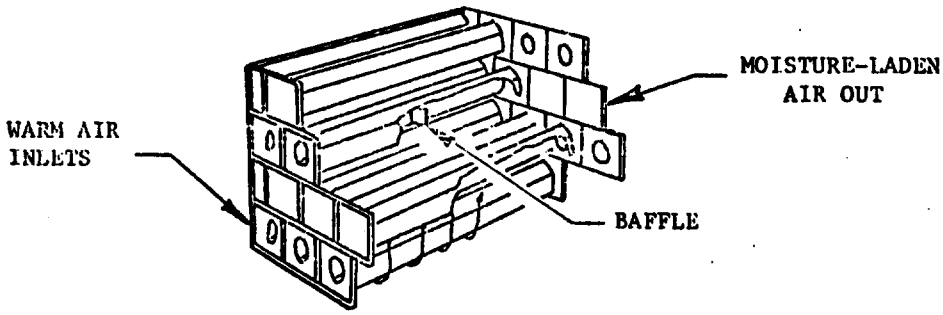

Figure VI-4: Typical Rack Dryer Used in Drying Grain

TABLE VI-17

PARTICULATE EMISSIONS FROM GRAIN DRYING

Type of Operation & Control	% Control	Particulate Emissions (Based on 60 tons/hr)			
		lb/ ton grain	kg/ton	lb/hr	kg/hr
Grain Drying, Column Dryer, Uncontrolled	0	0.3 -0.5	0.15-0.25	20-30	9.1 -13.6
Grain Drying, Recirculating Column Dryer	40-93	0.02-0.3	0.01-0.15	1- 5	0.46- 2.3
Grain Drying, Rack Dryer	0	0.5 -0.7	0.25-0.35	30-40	13.6 -18.2

E. Control Equipment:

The emissions from a dryer contain moist air and particulates which agglomerate and form cakes on surfaces. Because drying of grain is a seasonal operation, control of particulate emissions is accomplished using low-cost screen systems. Screens limit the size of particles discharged, which reduces particulate emissions. The dust-laden exhaust gases are passed through a wire screen device (24 mesh to 50 mesh) at velocities up to several hundred feet per minute. Since the screens collect large amounts of dust over a very short time period, the screens are cleaned automatically with a "vacuum head." Continuous movement of the vacuum head over the screen allows for the dust build-up to be continuously removed.

The vacuum's flow rate is about 10% of the dryer discharges. The vacuum exhaust is cleaned using either a high efficiency cyclone or recycling through the dryer.(1)(3)3-67 to 3-68

Systems that concentrate particulate in the area adjacent to the screens are also in use. Vacuum systems are used to pick up the concentrated particulate, but the screens do not require continuous cleaning.

Because of the moisture content of the exhaust gases, fabric filters are not used.(181)

F. New Source Performance Standards and Regulation Limitations:

New Source Performance Standards (NSPS): No New Source Performance Standards have been promulgated for grain drying.

State Regulations for New and Existing Sources: Particulate emission regulations for varying process weight rates are expressed differently from state to state. There are four types of regulations that are applicable to grain drying. The four types of regulations are based on:

1. concentration,
2. control efficiency,
3. gas volume, and
4. process weight.

Concentration Basis: Alaska, Delaware, Washington and New Jersey are representative of states that express particulate emission limitations in terms of grains/standard cubic foot and grains/dry standard cubic foot for general processes. The limitations for these four states are:

Alaska	-	0.05 grains/standard cubic foot
Delaware	-	0.20 grains/standard cubic foot
Washington	-	0.20 grains/dry standard cubic foot
Washington	-	0.10 grains/dry standard cubic foot (new)
New Jersey	-	0.02 grains/standard cubic foot

Iowa has a limitations specifically for grain processing.

Iowa	-	0.10 grains/standard cubic foot

Wisconsin has a limitation specifically for grain processing

Wisconsin	-	0.4 lbs/1000 lbs gas

Control Efficiency Basis: Utah requires general process industries to maintain 85% control efficiency over the uncontrolled emissions.

Gas Volume Basis: Texas expresses particulate emission limitations in terms of pounds/hour for specific stack flow rates expressed in actual cubic feet per minute. The Texas limitations for particulates are as follows:

1	-	10,000 acfm	-	9.11 lbs/hr
10,000	-	100,000 acfm	-	38.00 lbs/hr
10^5	-	10^6 acfm	-	158.6 lbs/hr

Process Weight Rate Basis Specifically for Grain Drying: Pennsylvania has a regulation specifically for grain drying. For the 60 tons/hour process outlined in Section D, an emission rate of 39.3 lbs/hour (17.8 kg/hr) is the maximum allowable.

Process Weight Rate Basis for New Sources: Several states have adopted particulate emission limitations for new sources with a process weight rate of 60 tons/hour. For new sources with this process weight rate, Massachusetts is representative of a most restrictive limitation, 20.0 lbs/hr (9.1 kh/hr) and Georgia is representative of a least restrictive limitation, 40.0 lbs/hr (18.1 kg/hour).

Process Weight Rate Basis for Existing Sources: The majority of states express general process limitations for existing sources in terms of lbs/hour for a wide range of process weight rates. For a process weight

rate of 60 tons/hour, Wisconsin is representative of a most restrictive limitation, 33.0 lbs/hour (15.0 kg/hr) and Mississippi is representative of a least restrictive limitation, 63.7 lbs/hr (28.9 kg/hr).

Table VI-18 presents controlled and uncontrolled emissions and limitations from grain drying.

TABLE VI-18

PARTICULATE EMISSIONS AND LIMITATIONS FROM GRAIN DRYING

Type of Operation & Control	% Control	Emissions		Limitations lbs/hr / kg/hr					
		lbs/hr	kg/hr		New Sources		Existing Sources		
				PA	MA	Georgia	Wis	UT 85%	Miss
Grain Drying, Column Dryer, Uncontrolled	0	20-30	9.1 -13.6	39.3/17.8	20.0/9.1	40.0/18.1	33.0/15.0	3.0	63.7/28.9
Grain Drying, Recirculating Column Dryer	40-93	1- 5	.46- 2.3	39.3/17.8	20.0/9.1	40.0/18.1	33.0/15.0	3.0	63.7/28.9
Grain Drying, Rack Dryer	0	30-40	13.6 -18.2	39.3/17.8	20.0/9.1	40.0/18.1	33.0/15.0	3.0	63.7/28.9

Potential Source Compliance and Emission Limitations: For a 60 ton/hr drying process described in Section D, a recirculating dryer is required to meet the most stringent regulation.

The Environment Reporter was used to update the emission limitations.

G. References:

Literature used to develop the preceding discussion on grain drying include the following:

1. Aften, Paul W., Thimsen, Donald J., "Proposed Design for Grain Elevator Dust Collection," Journal of the Air Pollution Control Association, pp 738-742, Vol. 18, No. 11, November 1968.

2. (Draft Copy) Background Information for Establishment of National Standards of Performance For New Sources, Grain Handling and Milling Industry, by Environmental Engineering, Inc., and PEDCO Environmental Specialists, Inc., July 15, 1971, for EPA, Contract No. CPA 70-142, Task Order No. 4.

3. Technical Guidelines for Review and Evaluation of Compliance Schedules for Air Pollution Sources by PEDCO, Environmental Specialists, Inc., Suite 13, Atkinson Square, Cincinnati, OH, 45246, EPA Contract No. 68-02-0607, Tasks, July 1973.

A. Source Category: VI Food and Agricultural Industry

B. Sub Category: Grain Processing

C. Source Description:

Handling of grain in preparation for storage is a multistep operation. After the grain is harvested, it goes through the following seven-step operation:

1. unloading - truck, rail, barge, ship,
2. cleaning,
3. drying,
4. turning,
5. blending,
6. separation, and
7. loading.

Several of these are discussed in other sections.

Grain processing includes milling and starch extraction.[3] The grain processing operation consists of the following steps:

1. milling (grinding),
2. separating,
3. mixing, and
4. storage-packaging.

The milling operations reduce grain into endosperm, bran, and germ. The reduced endosperm becomes flour, and the germ, bran, and remaining endosperm are used in the manufacture of animal feed. The grinding operation uses large roller-mills specially designed for grain milling.

During the grinding process, the grain constituents are separated mechanically so that the endosperm, bran, and germ are stored separately. The milling process is graphically illustrated in Figure VI-5.

Starch extraction uses dent corn as its basic raw material. The first step is removal of foreign material, and then the corn is softened by soaking in a solution of warm water and sulfurdioxide.

Next, the corn is milled into germ and hull components. Then, the mixture of starch, gluten, and hulls are finely ground and screened. The starch and gluten are then separated using centrifuges.[2]6-11,6-12 The cornstarch is further refined and packaged. See Figure VI-5.

D. Emission Rate:

Because of the value of milled grain, little is allowed to escape (during the milling process) as particulate pollutants. Particulate emissions attributed to milling are primarily a result of handling raw grains.[1]25[4]3-63-3-66 [5]V-16

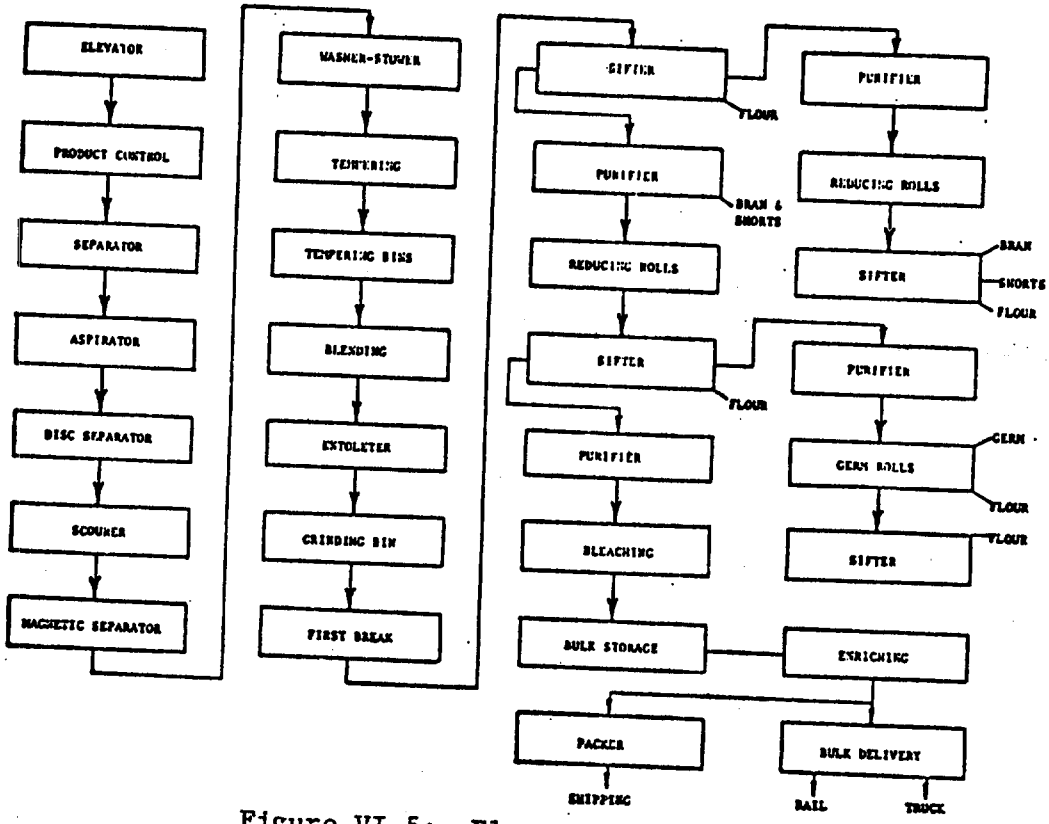

Figure VI-5: Flour Milling

The emissions rates for processing grain and starch extraction are detailed in Table VI-19.

Starch extraction releases dust at several points in the process, and their collective emissions are summarized in Table VI-19.(1)24

TABLE VI-19

PARTICULATE EMISSIONS FROM GRAIN PROCESSING

Type of Operation & Control	% Control	Particulate Emissions(1)			
		lb/ton	kg/ton	lbs/hr	kg/hr
Milling, Uncontrolled	0	3.1	1.5	158	79*
Milling, Hoods & Cyclones	90	0.31	.15	15.8	7.9*
Starch Extraction, Uncontrolled	0	8	3.64	26,400	12,040**
Starch Extraction, Centrifugal Gas Scrubber	97	.24	.11	792	359**

*Based on 51 ton/hr. **Based on 3,300 ton/hr.

E. Control Equipment:

Control equipment used for reduction or elimination of particulate emissions during milling vary depending on location and type of discharge.

Hoods are used to collect the escaping product during some milling operations while direct discharges to the atmosphere are controlled via cyclones.(1)24

Starch extraction emission controls are similar to controls used during milling operations previously discussed. The emission rates given in Table VI-19 use a centrifugal gas scrubber.(AP-42)6-11,6-12

F. New Source Performance Standards and Regulation Limitations:

New Source Performance Standards (NSPS): No New Source Performance Standards have been promulgated for grain processing.

State Regulations for New and Existing Sources: Particulate emission regulations for varying process weight rates are expressed differently from state to state. There are four types of regulations that are applicable to the grain processing. The four types of regulations are based on:

1. concentration,
2. control efficiency,
3. gas volume, and
4. process weight.

Concentration Basis: Alaska, Delaware, Pennsylvania, Washington and New Jersey are representative of states that express particulate emission limitations in terms of grains/standard cubic foot and grains/dry standard cubic foot for general processes. The limitations for these five states are:

Alaska	-	0.05 grains/standard cubic foot
Delaware	-	0.20 grains/standard cubic foot
Pennsylvania	-	0.04 grains/dry standard cubic foot, when gas volume is less than 150,000 dscfm
Pennsylvania	-	0.02 grains/dry standard cubic foot, when gas volumes exceed 300,000 dscfm
Washington	-	0.20 grains/dry standard cubic foot
Washington	-	0.10 grains/dry standard cubic foot (new)
New Jersey	-	0.02 grains/standard cubic foot

Iowa has a specific regulation for grain processing:

Iowa	-	0.15 grains/dry standard cubic foot

Wisconsin has a specific regulation for grain processing:

Wisconsin	-	0.4 lbs/1000 lbs gas

Control Efficiency Basis: Utah requires general process industries to maintain 85% control efficiency over the uncontrolled emissions.

Gas Volume Basis: Texas expresses particulate emission limitations in terms of pounds/hour for specific stack flow rates expressed in actual cubic feet per minute. The Texas limitations for particulates are as follows:

1	- 10,000 acfm	-	9.11 lbs/hr
10,000	- 100,000 acfm	-	38.00 lbs/hr
10^5	- 10^6 acfm	-	158.6 lbs/hr

Process Weight Rate Basis for New Sources: Several states have adopted particulate emission limitations for new sources with a process weight rate of 51 tons/hour and 3,300 tons/hour. For a source with a process weight of 51 tons/hr, Massachusetts is representative of a most restrictive limitation, 22.9 lbs/hr (10.4 kg/hr) and Georgia is representative of a least restrictive limitation, 44.8 lbs/hr (20.3 kg/hr). For sources with a process weight of 3300 tons/hr virtually all the states have a process limitation of 94.1 lbs/hr (42.7 kg/hr). New Hampshire and Georgia are typical of states that have particulate limitations for such large sources.

Process Weight Rate Basis for Existing Sources: The majority of states express process limitations for existing sources in terms of lbs/hr for a wide range of process weight rates. For a process weight rate of 51 tons/hr, Colorado is representative of a most restrictive limitation, 32.5 lbs/hr (14.7 kg/hr) and Mississippi is representative of a least restrictive limitation, 57.2 lbs/hr (25.9 kg/hr). For a process weight rate of 3300 tons/hr, Indiana is representative of a most restrictive limitation, 94.1 lbs/hr (42.7 kg/hr) and Mississippi is representative of a least restrictive limitation, 876 lbs/hr (397 kg/hr).

Table VI-20 presents controlled and uncontrolled emissions and limitations for grain processing.

TABLE VI-20

PARTICULATE EMISSIONS AND LIMITATIONS FROM GRAIN PROCESSING

Type of Operation & Control	% Control	Emissions lbs/hr	Emissions kg/hr	Limitations lbs/hr / kg/hr — New			Existing	
				MA	GA	UT 85%	CO	Miss.
Milling, Uncontrolled*	0	158	79	32.0/14.5	44.8/20.3	23.7/24.2	32.5/14.7	57.2/25.9
Milling, Hoods & Cyclones*	90	15.8	7.9	32.0/14.5	44.8/20.3	-	32.5/14.7	57.2/25.9
				NH			Ind.	MISS
Starch Extraction, Uncontrolled**	0	26,400	12,040	94.1/42.7		3760/1796	94.1/42.7	876/397
Starch Extraction, Centrifugal Gas Scrubber**	97	792	359	94.1/42.7		-	94.1/42.7	876/397

*Based on 51 tons/hr. **Based on 3,300 tons/hr.

Potential Source Compliance and Emission Limitations: For grain processing operations described in Section D, existing control technology is marginal to meet the most stringent limitations.

The Environment Reporter was used to update the emission limitations.

G. References:

Literature used to develop the preceding discussion on grain processing include the following:

1. Background Information for Establishment of National Standard of Performance for New Sources, Grain Handling & Milling Industry (Draft), Environmental Engineering, Inc. and PEDCO Environmental Specialists, Inc., EPA, Contract No. CPA 70-142, Task Order No. 4, July 15, 1971.

2. Compilation of Air Pollutant Emission Factors (Revised), EPA, Publication No. AP-42, February 1972.

3. First, M. W., W. Schilling, J. H. Govan, A. H. Quinby, "Control of Odors and Aerosols from Spent Grain Dryers," Journal of the Air Pollution Control Association, Volume 24, Number 7, July 1974.

4. Technical Guide for Review and Evaluation of Compliance Schedules for Air Pollution Sources, PEDCO, Environmental Specialists, Inc., EPA, Contract No. 68-02-0607, July 1973.

5. Exhaust Gases from Combustion and Industrial Processes, Engineering Sciences, Inc., EPA, Contract No. EHSD71-36, October 2, 1971.

6. Hopper, Thomas G., Impact of New Source Performance Standards on 1985 National Emissions from Stationary Sources, Vol, II, Industrial Factors, Starch.

A. Source Category: VI Food and Agricultural Industry

B. Sub Category: Grain - Screening and Cleaning

C. Source Description:

Handling of grain in preparation for storage is a multistep operation. After the grain is harvested, it goes through the following seven steps:

1. unloading - truck, rail, barge, ship,
2. cleaning,
3. drying,
4. turning,
5. blending,
6. separation, and
7. loading.[3] 3-61, 3-62

Several of these are discussed in other sections of this report.

The cleaning of grain removes foreign objects that are picked up during harvesting and handling. The cleaning is done in two steps. First, the larger foreign objects are removed by passing the uncleaned grain through coarse screens. Second, an air aspirator removes chaff, fibers, and dust. The particles of foreign material are entrained by the aspirator's air stream.[1] 7-8 After these two operations, the grain is graded by passing it through vibrating screens.[1] 7-8

D. Emission Rate:

The particulate emission rate for cleaning and screening of grain is dependent upon the type of grain being processed, and to some extent, growing and harvesting conditions. Typical emission rates for screen, cleaning, and associated operations are presented in Table VI-21.[2]

TABLE VI-21

PARTICULATE EMISSIONS FROM GRAIN SCREENING AND CLEANING

Type of Operation & Control	% Control	Particulate Emissions (As Grain Dust)[2] (Based on 300 to 1500 ton/hr)			
		grain lb/ton	kg/ton	lb/hr	kg/hr
Cleaning, Screening, Uncontrolled	0	5	2.3	1500-7500	680-3401
Cleaning, Screening, Controlled by Cyclones	91	.45	.20	135- 675	61- 306
Unloading, Uncontrolled	0	1-2	.45-.91	300-3000	136-1360
Unolading, Controlled by Cyclones	91	.09-.18	.04-.08	27- 270	12- 122

E. Control Equipment:

Particulate emissions from cleaning and screening can be controlled by cyclones or fabric filters. Since stringent control of particulate emissions from grain handling operations will probably be required in the future, fabric filters will be used. Fabric filters have an efficiency of 99 percent, while cyclones are 91 percent efficient.(2)

In a typical collection system, the dust is removed from the processing area by a special ventilation system. The exhaust of the ventilation system is passed through a fabric filter system, and the cleaned gases are discharged to the atmosphere.(2)

F. New Source Performance Standards and Regulation Limitations:

New Source Performance Standards (NSPS): No New Source Performance Standards have been promulgated for grain screening and cleaning.

State Regulations for New and Existing Sources: Particulate emission regulations for varying process weight rates are expressed differently from state to state. There are four types of regulations that are applicable to grain screening and cleaning. The four types of regulations are based on:

1. concentration,
2. control efficiency,
3. gas volume, and
4. process weight.

Concentration Basis: Alaska, Delaware, Washington and New Jersey are representative of states that express particulate emission limitations in terms of grains/standard cubic foot and grains/dry standard cubic foot for general processes. The limitations for these four states are:

Alaska	-	0.05 grains/standard cubic foot
Delaware	-	0.20 grains/standard cubic foot
Washington	-	0.20 grains/dry standard cubic foot
Washington	-	0.10 grains/dry standard cubic foot (new)
New Jersey	-	0.02 grains/standard cubic foot

Iowa has a specific regulation for grain processing:

Iowa	-	0.10 grains/standard cubic foot

Wisconsin has a specific regulation for grain processing:

Wisconsin	-	0.4 lbs/1000 lbs gas

Control Efficiency Basis: Utah requires general process industries to maintain 85% control efficiency over the uncontrolled emissions.

Gas Volume Basis: Texas expresses particulate emission limitations in terms of pounds/hour for specific stack flow rates expressed in actual cubic feet per minute. The Texas limitations for particulates are as follows:

1	- 10,000 acfm	-	9.11 lbs/hr
10,000	- 100,000 acfm	-	38.00 lbs/hr
10^5	- 10^6 acfm	-	158.6 lbs/hr

Process Weight Rate Basis Specifically for Grain Screening: Pennsylvania has a regulation specifically for grain screening. For a 300 ton/hour process outlined in Section D, an emission rate of 91.5 lbs/hr (41.5 kg/hr) is the maximum allowable. For a 1500 ton/hour process outlined in Section D, an emission rate of 180 lbs/hr (81.6 kg/hr) is the maximum allowable.

Process Weight Rate Basis for New Sources: Several states have adopted particulate emission limitations for new sources with a process weight rate of 300 tons/hour and 1500 tons/hour. For sources with a process weight rate of 300 tons/hour, Massachusetts is representative of a most restrictive limitation, 31.5 lbs/hr (14.3 kg/hr) and Georgia is representative of a least restrictive limitation, 60.1 lbs/hr (27.3 kg/hr). For sources with a process weight rate of 1500 tons/hr, New Hampshire is representative of a most restrictive limitation, 83.0 lbs/hr (37.6 kg/hr) and Georgia is representative of a least restrictive limitation of 85.2 lbs/hr (36.6 kg/hr).

Process Weight Rate Basis for Existing Sources: The majority of states express general process limitations for existing sources in terms of lbs/hr for a wide range of process weight rates. For a process weight rate of 300 tons/hr, Colorado is representative of a most restrictive limitation, 43.1 lbs/hr (19.5 kg/hr) and Mississippi is representative of a least restrictive limitation, 176.9 lbs/hr (80.2 kg/hr). For a process weight rate of 1500 tons/hr, Indiana is representative of a most restrictive limitation, 85.2 lbs/hr (38.6 kg/hr) and Mississippi is representative of a least restrictive limitation, 534 lbs/hr (242 kg/hr).

Table VI-22 presents controlled and uncontrolled emissions and limitations for grain screening and cleaning.

TABLE VI-22

PARTICULATE EMISSIONS AND LIMITATIONS FROM GRAIN SCREENING AND CLEANING

Type of Operation & Control	% Control	Emissions lbs/hr/kg/hr (based on 300 tons/hr)	Limitations lbs/hr/kg/hr				
			New		Existing		
			MA	GA	UT	Col.	Miss.
Cleaning & Screening, Uncontrolled	0	1500/680	31.5/14.3	60.1/27.3	225/102	43.1/19.5	176.9/80.2
Cleaning & Screening, Cyclones	91	135/61	31.5/14.3	60.1/27.3	225/102	43.1/19.5	176.9/80.2
Unloading, Uncontrolled	0	300/136	31.5/14.3	60.1/27.3	45/20.4	43.1/19.5	176.9/80.2
Unloading, Cyclones	91	27/12	31.5/14.3	60.1/27.3	45/20.4	43.1/19.5	176.9/80.2
		(based on 1500 tons/hr)	NH	GA	UT	Ind.	Miss.
Cleaning & Screening, Uncontrolled	0	7500/3402	83/37.6	85.2/36.6	1125/510	85.2/38.6	534/242
Cleaning & Screening, Cyclones	91	675/306	83/37.6	85.2/36.6	1125/510	85.2/38.6	534/242
Unloading, Uncontrolled	0	3000/1360	83/37.6	85.2/36.6	450/204	85.2/38.6	534/242
Unloading, Cyclones	91	270/122	83/37.6	85.2/36.6	450/204	85.2/38.6	534/242

Potential Source Compliance and Emission Limitations: For the grain screening and cleaning operation described in Section D, existing control technology is adequate to meet current limitations.

The Environment Reporter was used to update the emission limitations.

G. References:

References used in preparation of this summary on grain cleaning and screening include the following:

1. Background Information for Establishment of National Standards of Performance for New Sources, Grain Handling & Milling Industry (Draft), Environmental Engineering, Inc. and PEDCO Environmental Specialists, Inc.

2. Thimsen, D. S., P. W. Aften, A Proposed Design for Grain Elevator Dust Collection, Journal of the Air Pollution Control Association, Volume 18, Number 11, November 1968.

3. Technical Guide for Review and Evaluation of Compliance Schedules for Air Pollution Sources, PEDCO Environmental Specialists, Inc., EPA, Contract No. 68-02-0607, July 1973.

A. Source Category: VI Food and Agricultural Industry

B. Sub Category: Vegetable Oil Manufacturing

C. Source Description:

Many types of vegetable oils are manufactured for the food and other industries. Vegetable oil not consumed by the food industry is used in the manufacture of paints.[4]6-143 The major vegetable oils include:

1. soybean,
2. cottonseed,
3. corn,
4. linseed,
5. peanut, and
6. safflower oil

in order of quantities produced yearly.[1]1-2

Processing vegetable seeds into vegetable oil includes:

1. dehulling,
2. disintegration of seed meats,
3. cooking of meats, and
4. oil extraction.[1]2-1,2-6

After the seeds are cleaned, using air separators, screens and magnets, they are dehulled. The dehulling increases the protein content of oil and the production capacity.[1]2-5

The insides of the dehulled seeds, the meats, are crushed to allow for easier processing. The crushing is usually done by a rolling process. The crushed seed meats present the maximum surface area for the minimum volume to the extraction process.[1]2-5

The cooking of the seed meats ruptures the oil cells and removes the liquid fraction from the seed meats.[1]2-5

The actual extraction of the oil is done in several manners depending upon the type of oil being produced and the particular plant involved.[1]2-6

The oldest extraction process involves pressing the seeds in a screw press or hydraulic press. Those plants utilizing presses for oil extraction are equipped with continuous feed screw presses as opposed to the hydraulic press, which cannot be continuously fed. The screw pressing process is detailed in Figure VI-11.[1]2-8,2-9

Oil extraction from soybeans utilizes a solvent extraction technique. Today almost all vegetable oil, with the exception of cottonseed, is recovered by solvent extraction. Solvent extraction diffuses solvent and oil through the cell walls of the seed meats.[1]2-10

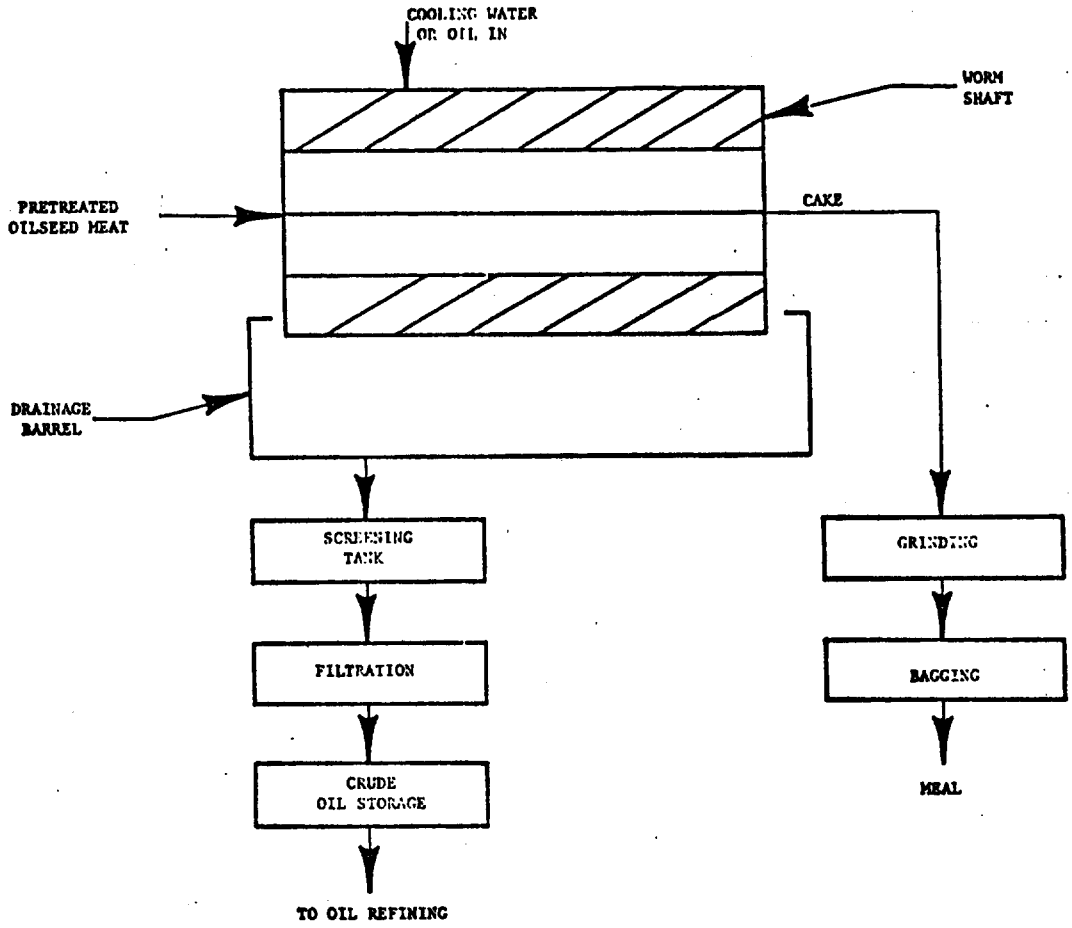

Figure VI-11: Continuous Feed Screw Press for Oil Extraction

The solvent extraction process is either continuous or in batches. The two different types of extraction employed include:

1. percolation extraction and
2. countercurrent extraction.

The usual solvent employed is hexane; however, trichloroethylene is used in small batch operations.(1)2-10

The solvent is removed from the solvent-oil mixture in a long tube evaporator and completed in a stripping column. About 90 percent of the solvent is removed by the tube evaporator, and sparge steam is used in the stripping column to remove the remainder of the solvent. A typical solvent extraction process is diagrammed in Figure VI-12.(1)2-11

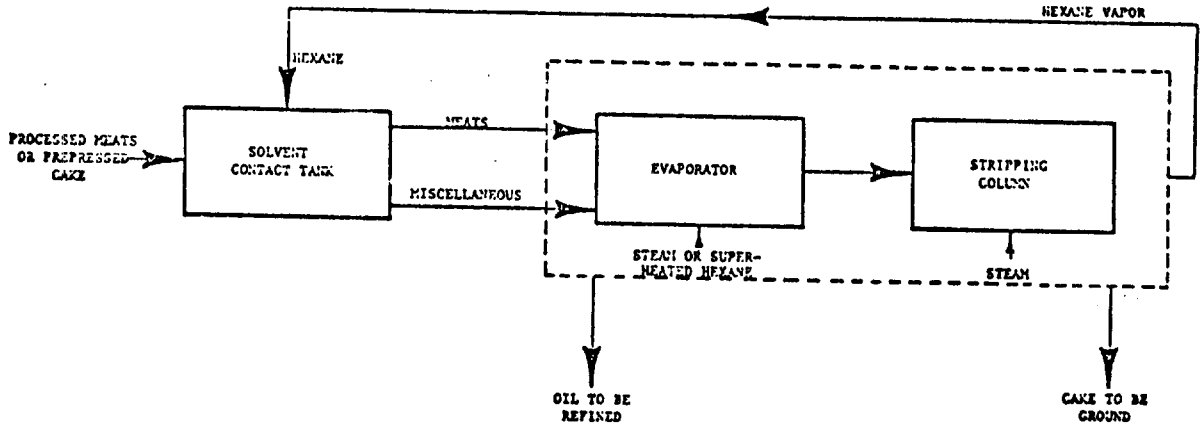

Figure VI-12: Continuous Flow Solvent Extraction Process For Vegetable Oil Manufacture

After the solvent has been recovered, the remaining mixture of vegetable oil, free fatty acids, phosphatides, and other foreign matter is refined. The refining process includes six steps:

1. Removal of color bodies by absorption in a process requiring continuous mixing of heated oil in dilute caustic soda.
2. Centrifuging the oil-reagent mixture in refined oil and soap stock.
3. Secondary refining of oil by mixing the heated oil with hot water and centrifuging the mixture to remove remaining soap stock.
4. Vacuum drying of rerefined oil to remove additional water.
5. Distillation of the volatile contents of the refined, bleached, and hydrogenated oil.
6. Final processing including interesterification and winterization of oil.(1)2-14

This process is diagrammed in Figure VI-13.(2)10

D. Emission Rate:

Two types of emissions are attributed to the manufacture of vegetable oil.(2)53 Particulate discharges occur during:

1. cleaning,
2. delinting,
3. dehulling, and
4. meal grinding

operations. Hydrocarbon emissions occur during removal of the solvent from the oil-solvent mixture consisting of hexane vapors.(1)3-1-3-2 Particulate emissions

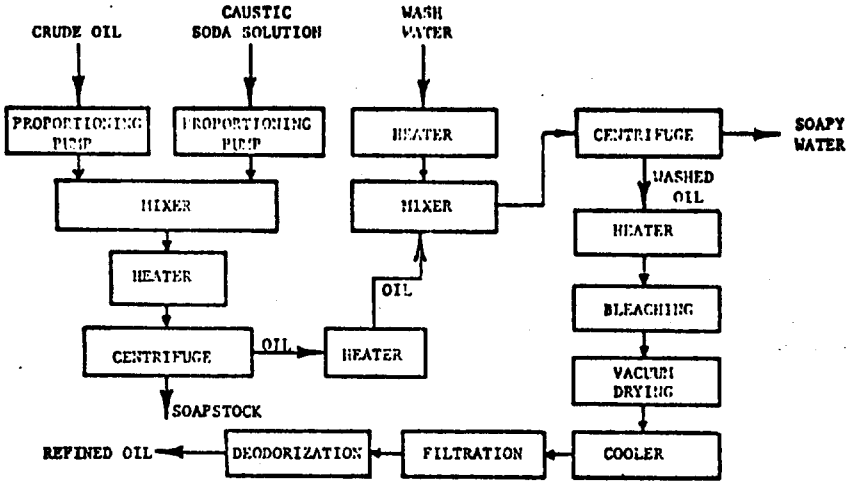

Figure VI-13: Crude Vegetable Oil Refining Process

from the manufacture of soybean oil are presented in Table VI-25.(5)295-296 About 80 percent of the total yearly production of vegetable oil is soybean oil.(1)1-2 The processing of soybeans involves eight steps which emit particulates to the atmosphere.

TABLE VI-25A

PARTICULATE EMISSIONS FROM SOYBEAN OIL MANUFACTURE

Type of Operation and Control	% Control	Total Particulate Emissions(3)6-9 (Based on 4.1 ton/hr Oil)			
		lb/ton	kg/ton	lb/hr	kg/hr
Soybean Oil Manufacture					
Hull Toaster, Uncontrolled	0	46.	23.	188.	85.4
Hull Toaster, Cyclone	99*	0.5	0.2	1.9	.9
Flake Roll Aspirator, Uncontrolled	0	69.	34.5	284.	129.
Flake Roll Aspirator, Cyclone	99*	0.7	.3	2.8	1.3
Primary Dehulling, Uncontrolled	0	173.	86.5	710.	323.
Primary Dehulling, Cyclone	99*	1.7	.9	7.1	3.2
Hull Screen & Conveyor, Uncontrolled	0	12.	6.	49.2	22.4
Hull Screen & Conveyor, Cyclone	99*	0.1	0.06	.5	0.2
Meal Cooler, Uncontrolled	0	102.	51.	418.	190.
Meal Cooler, Cyclone	99*	1.0	0.5	4.2	1.9
Meal Dryer, Uncontrolled	0	6.	3.	24.6	11.2
Meal Dryer, Cyclone	99*	0.06	0.03	.2	.1
White Flake Cooling, Uncontrolled	0	526.	263.	2150.	976.
White Flake Cooling, Cyclone	99*	5.3	2.6	21.5	9.8
Forsberg Screens, Uncontrolled	0	12.	6.	49.2	22.3
Forsberg Screens, Cyclone	99*	0.1	0.06	.5	.2

*Hopper, T., Impact of New Source Performance Standards on 1985 National Emissions from Stationary Sources, Volume I

The total of all particulate emissions from the above sources is 9.46 lb/ton (4.74 kg/ton) of vegetable oil for controlled plants. For uncontrolled plants, the total for all sources is 946 lb/ton (474 kg/ton) of vegetable oil.

Hydrocarbon emissions from newer plants arise from solvent handling operations. Most operations utilize hexane, and about one-half gallon of hexane per ton of seed processed is lost as hydrocarbon emissions. The following table details hydrocarbon emissions from vegetable oil manufacturing.(1)2-13

TABLE VI-25B

HYDROCARBON EMISSIONS FROM SOYBEAN OIL MANUFACTURE

Operation & Control	% Control	Hydrocarbon Emissions(2)2-5			
		lb/ton oil	kg/ton oil	(based on 4.1 tons/hr) lb/hr	kg/hr
Soybean Oil Manufacture, Uncontrolled	0	4.1	2.1	16.9	7.7
Soybean Oil Manufacture, Solvent Extraction	99*	.04	.02	.2	.09

* Hexane 6.5 lbs/gal, 1.47 tons seed/ton oil

E. Control Equipment:

Equipment used to control particulate emissions is separate from and different from that used to control hydrocarbon emissions.

With the exception of delinting of cottonseeds in the cotton ginning process, high efficiency cyclones are used to control particulate emissions in seed handling operations.(1)4-1-4-2 Bag filters could be used and would be more efficient but more costly.(1)4-2-4-3

Control of hexane vapors from solvent recovery operations is important because of its cost because it poses a fire hazard and is toxic in relative low concentrations.(1)4-4 Hexane is recovered using condensers and oil absorption units. Any hexane not recovered through the control equipment is burned in an afterburner. Hexane may also be collected in carbon absorbing towers, but this method is usually employed only in older plants.(1)4-4

F. New Source Performance Standards and Regulation Limitations:

New Source Performance Standards (NSPS): No new source performance standards have been promulgated for vegetable oil manufacture.

State Regulations for New and Existing Sources: Currently, hydrocarbon emission regulations are patterned after Los Angeles Rule 66 and Appendix B type legislation. Organic solvent useage is categorized by three basic types. These are, (1) heating of articles by direct flame or baking with any organic solvent, (2) discharge into the atmosphere of photochemically reactive solvents by devices that employ or apply the solvent, (also includes air or heated drying of articles for the first twelve hours after removal from #1 type device) and (3) discharge into the atmosphere of non-photochemically reactive solvents. For the purposes of Rule 66, reactive solvents are defined as solvents of more than 20% by volume of the following:

1. A combination of hydrocarbons, alcohols, aldehydes, esters, ethers or ketones having an olefinic or cyclo-olefinic type of unsaturation: 5 per cent
2. A combination of aromatic compounds with eight or more carbon atoms to the molecule except ethylbenzene: 8 per cent
3. A combination of ethylbenzene, ketones having branched hydrocarbon structures, trichloroethylene or tolune: 20 per cent

Rule 66 limits emissions of hydrocarbons according to the three process types. These limitations are as follows:

	Process	lbs/day &	lbs/hour
1.	heated process	15	3
2.	unheated photochemically reactive	40	8
3.	non-photochemically reactive	3000	450

Appendix B (Federal Register, Vol. 36, No. 158 - Saturday, August 14, 1971) limits the emission of photochemically reactive hydrocarbons to 15 lbs/day and 3 lbs/hr. Reactive solvents can be exempted from the regulation if the solvent is less than 20% of the total volume of a water based solvent. Solvents which have shown to be virtually unreactive are, saturated halogenated hydrocarbons, perchloroethylene, benzene, acetone and c_1-c_5n-paraffins.

For both Appendix B and Rule 66 type legislation, if 85% control has been demonstrated the regulation has been met by the source even if the lbs/day and lbs/hour values have been exceeded. Most states have regulations that limit the emissions from handling and use of organic solvents. Alabama, Connecticut and Ohio have regulations patterned after Los Angeles Rule 66. Indiana and Louisiana have regulations patterned after Appendix B. Some states such as North Carolina have an organic solvent regulation which is patterned after both types of regulations.

Table VI-26 presents the uncontrolled and controlled emission limitations from vegetable oil manufacturing.

TABLE VI-26

HYDROCARBON EMISSIONS AND LIMITATIONS FROM VEGETABLE OIL MANUFACTURE

Type of Operation and Control	% Control	Emissions lbs/hr/kg/hr	Limitations lbs/hr/kg/hr			
			Heated		Unheated	
Soybean Oil Manufacture, Uncontrolled	0	16.9/7.7	3	1.4	8	3.6
Soybean Oil Manufacture, Solvent Extraction	99	.2/.09	3	1.4	8	3.6

Particulate Regulations

State Regulations for New and Existing Sources: Particulate emission regulations for varying process weight rates are expressed differently from state to state. There are four types of regulations that are applicable to vegetable oil manufacture. The four types of regulations are based on:

1. concentration
2. control efficiency
3. gas volume, and
4. process weight

Concentration Basis: Alaska, Delaware, Pennsylvania, Washington and New Jersey are representative of states that express particulate emission limitations in terms of grains/standard cubic foot and grains/dry standard cubic foot for general processes. The limitations for these five states are:

Alaska - 0.05 grains/standard cubic foot
Delaware - 0.20 grains/standard cubic foot
Pennsylvania - 0.04 grains/dry standard cubic foot, when gas volume is less than 150,000 dscfm
Pennsylvania - 0.02 grains/dry standard cubic foot, when gas volumes exceed 300,000 dscfm
Washington - 0.20 grains/dry standard cubic foot
Washington - 0.10 grains/dry standard cubic foot (new)
New Jersey - 0.02 grains/standard cubic foot

Control Efficiency Basis: Utah requires general process industries to maintain 85% control efficiency over the uncontrolled emissions.

Gas Volume Basis: Texas expresses particulate emission limitations in terms of pounds/hour for specific stack flow rates expressed in actual cubic feet per minute. The Texas limitations for particulates are as follows:

1	-	10,000 acfm	-	9.11 lbs/hr
10,000	-	100,000 acfm	-	38.00 lbs/hr
10^5	-	10^6 acfm	-	158.6 lbs/hr

Process Weight Rate Basis for New Sources: Several states have adopted particulate emission limitations for new sources with a process weight rate of 4.1 tons/hr. For sources with a process weight rate of 4.1 tons/hr, Massachusetts is representative of a most restrictive limitation, 4.4 lbs/hr (2.0 kg/hr) and New Hampshire is representative of a least restrictive limitation, 10.4 lbs/hr (4.7 kg/hr).

Process Weight Rate Basis for Existing Sources: The majority of states express process limitations for existing sources in terms of lbs/hr for a wide range of process weight rates. For a process weight rate of 4.1 tons/hr, Florida is representative of a most restrictive limitation, 8.5 lbs/hr (3.9 kg/hr) and Mississippi is representative of a least restrictive limitation, 10.7 lbs/hr (4.9 kg/hr).

Table VI-26B presents controlled and uncontrolled emissions and limitations from vegetable oil.

TABLE VI-26B

PARTICULATE EMISSIONS AND LIMITATIONS FROM VEGETABLE OIL MANUFACTURING

Type of Operation and Control	% Control	Emissions based on 4.1 tons/hr		Limitations lbs/hr/kg/hr				
				New		Existing		
		lb/hr	kg/hr	MA	NH	Florida	Miss.	UT 85%
Soybean Oil Manufacture								
Hull Toaster, Uncontrolled	0	188.	85.3	4.4/2.0	10.4/4.7	8.5/3.9	10.7/4.9	28.2/12.8
Hull Toaster, Cyclone	99	1.9	.9	4.4/2.0	10.4/4.7	8.5/3.9	10.7/4.9	
Flake Roll Aspirator, Uncontrolled	0	284.	129.	4.4/2.0	10.4/4.7	8.5/3.9	10.7/4.9	42.6/19.3
Flake Roll Aspirator, Cyclone	99	2.8	1.3	4.4/2.0	10.4/4.7	8.5/3.9	10.7/4.9	
Primary Dehulling, Uncontrolled	0	710.	323.	4.4/2.0	10.4/4.7	8.5/3.9	10.7/4.9	107/48.5
Primary Dehulling, Cyclone	99	7.1	3.2	4.4/2.0	10.4/4.7	8.5/3.9	10.7/4.9	
Hull Screen & Conveyor, Uncontrolled	0	45.2	22.4	4.4/2.0	10.4/4.7	8.5/3.9	10.7/4.9	6.8/3.1
Hull Screen & Conveyor, Cyclone	99	.5	.2	4.4/2.0	10.4/4.7	8.5/3.9	10.7/4.9	
Meal Cooler, Uncontrolled	0	418.	190.	4.4/2.0	10.4/4.7	8.5/3.9	10.7/4.9	62.7/284
Meal Cooler, Cyclone	99	4.2	1.9	4.4/2.0	10.4/4.7	8.5/3.9	10.7/4.9	
Meal Dryer, Uncontrolled	0	24.6	11.2	4.4/2.0	10.4/4.7	8.5/3.9	10.7/4.9	3.7/1.7
Meal Dryer, Cyclone	99	.3	.1	4.4/2.0	10.4/4.7	8.5/3.9	10.7/4.9	
White Flake Cooling, Uncontrolled	0	2150.	976.	4.4/2.0	10.4/4.7	8.5/3.9	10.7/4.9	323./147
White Flake Cooling, Cyclone	99	21.5	9.8	4.4/2.0	10.4/4.7	8.5/3.9	10.7/4.9	
Forsberg Screens, Uncontrolled	0	49.2	22.3	4.4/2.0	10.4/4.7	8.5/3.9	10.7/4.9	7.4/3.4
Forsberg Screens, Cyclone	99	.5	.2	4.4/2.0	10.4/4.7	8.5/3.9	10.7/4.9	

Potential Source Compliance and Emission Limitation: Absorption of hexane vapors is performed to conserve an expensive solvent and reduce the hazards of explosion. Controlled, a plant producing 4.1 tons/hour vegetable oil meets current hydrocarbon restrictions. Existing particulate control technology is adequate to meet current limitations.

The Environmental Reporter was used to update emission limitations.

G. References:

Literature used in preparation of this summary on vegetable oil manufacturing includes the following:

1. Background Information for Establishment of National Standards of Performance for New Sources, Vegetable Oil Industry (Draft), Environmental Engineering, Inc., EPA, Contract No. CPA 70-142, Task Order No. 9h, July 15, 1971.

2. Hopper, T., Impact of New Source Performance Standards on 1985 National Emissions from Stationary Sources, Volume I.

3. Impact of New Source Performance Standards on 1985 National Emissions From Stationary Sources, Volume II, Emission Factors, Vegetable Oil Manufacturing, Marrone.

4. Baumeister, Theodore, Mark's Standard Handbook for Mechanical Engineers, McGraw-Hill Book Company, New York, Seventh Edition.

5. Mumma, C. E., T. E. Weast, Larry J. Shannon, Trace Pollutants from Agricultural Material Processes (Draft), EPA, Contract No. 68-02-1324, Task No. 2, June 4, 1974.

6. Priorization of Air Pollution from Industrial Surface Coating Operations, Monsanto Research Corporation Contract No. 68-02-0230, February, 1975.

A. Source Category: VII Metallurgical Industry

B. Sub Category: Cast Iron Foundries (Electric Furnaces)

C. Source Description:

Iron foundries produce iron castings from molten iron through a number of distinct and interconnected operations which include:

1. raw materials storage and handling,
2. melting,
3. pouring into molds,
4. mold dumping, and
5. casting cleaning.

The process flow in the foundry melting department is shown in Figure VII-1.(2) IV-9

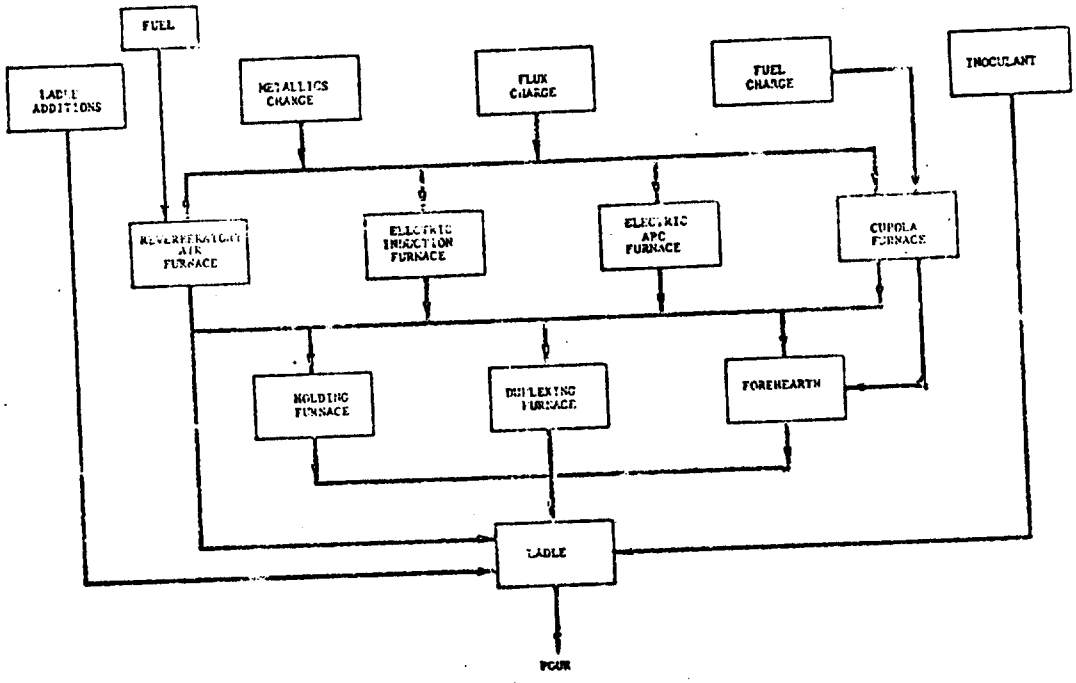

Figure VII-1: Process Flow Diagram, Melting Department

An electric arc furnace is used in the melting of iron scrap to produce grey iron. The furnace consists of a refractory lined, cup shaped, steel shell with a refractory lined roof through which three graphite electrodes are inserted. Scrap iron is charged to the furnace and melted, and alloying elements and fluxes are added as needed. Electric arc furnaces have rapid and accurate heat control. The high temperatures of the arcs produce dense fumes consisting of iron and other metal oxides plus organic particulates from oil and other contaminants in the scrap.

Core-type electric induction furnaces are used for melting cast iron where high quality, clean, dry, grease free metal is available for charging. The furnace consists of a drum-shaped vessel that converts electrical energy into heat by setting up a magnetic field when the primary coil of the transformer is energized. Alternating current is passed through a primary coil with a solid iron core. The molten iron is contained within a loop that surrounds the primary coil and acts as a secondary coil. The current flowing through the primary coil induces a current in the loop, and the electrical resistance of the molten metal creates the heat for melting. The heated metal circulates to the main furnace chamber and is replaced by cooler metal. Figures VII-2[IV-19] and VII-3[(2)IV-20] respectively illustrate the electric arc and the induction furnaces. The average process weight rate for electric furnaces is 900 lbs/hr or 3,950 tons per year[(4)Cast Iron Foundry (Furnaces)]

D. Emission Rates:

The melting department produces the majority of emissions in the foundry. These emissions consist of particulate matter, fumes, smoke, and vaporized metal oxides. The quantity of these emissions is a function of the quality and composition of charge materials and the temperature of the bath. These emissions are greatest during the melt-down phase of the cycle and less after the melting is completed. The uncontrolled and controlled particulate emissions from electric furnaces are presented in Table VII-1.[(3)7.10-1]

TABLE VII-1

PARTICULATE EMISSIONS FROM CAST IRON FOUNDRIES (ELECTRIC FURNACES)

Type of Operation and Control	Particulate Emissions (based on 3,950 tons/yr)				
	% Control	lbs/ton	kg/mt	lbs/hr	kg/hr
Electric induction furnace, uncontrolled	0	—	—	—	—
Electric arc furnace, uncontrolled	0	1.5	0.75	0.68	0.31
Electric arc furnace, with baghouse	99	0.015	0.0075	0.0068	0.0031
Electric arc furnace, with electrostatic precipitator	99	0.015	0.0075	0.0068	0.0031

E. Control Equipment:

Baghouses and electrostatic precipitators are used to reduce emissions from electric arc furnaces by 95 to 99%.[(4) Cast Iron Foundry (Furnaces)] Elaborate facilities for cooling the effluent gas stream from the furnace are not needed. However, a shaking mechanism and compartmentation must be provided for baghouses while precipitator use may require sprayers or afterburners to heat and humidify the gases vented to the control device. Generally, pollution control devices are not used on induction furnaces. Table VII-1 shows the controlled and uncontrolled emissions from electric furnaces in cast iron foundries.

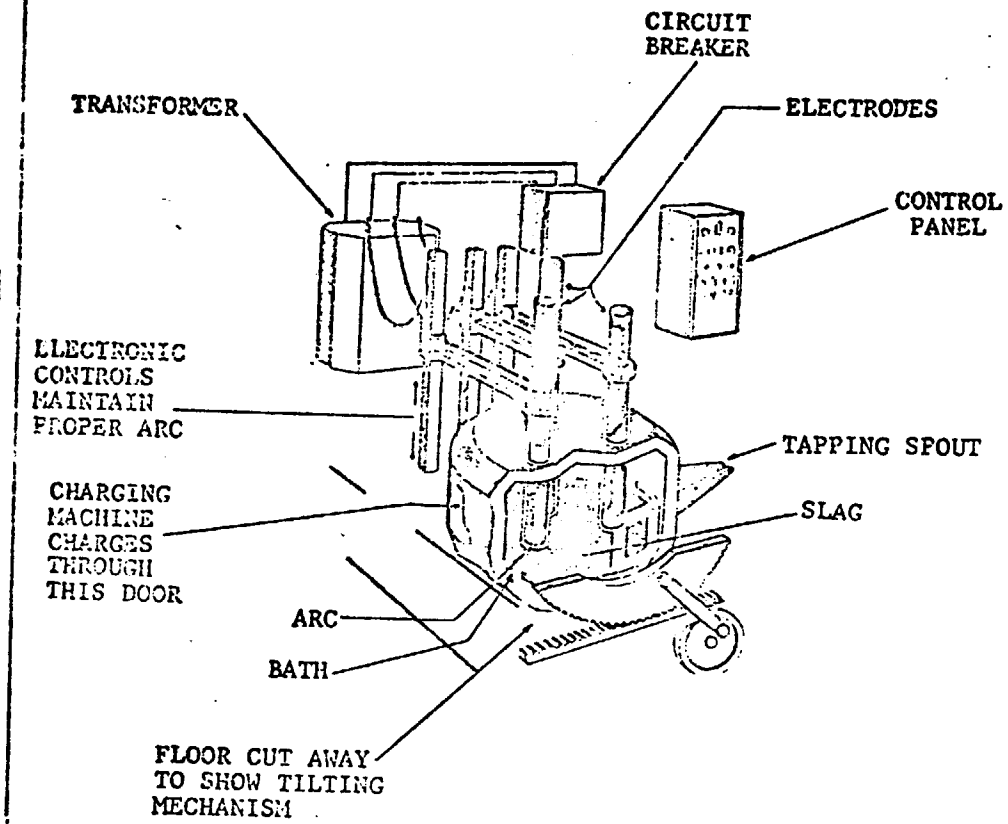

Figure VII-2: Illustration of Electric Arc Furnace

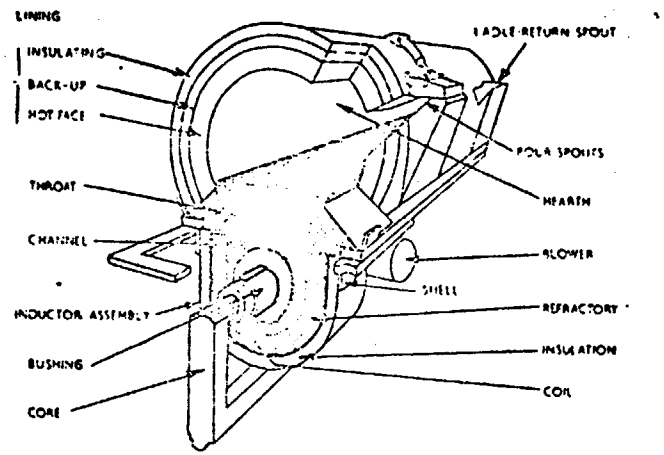

Figure VII-3: Illustration of Channel Induction Furnace

F. New Source Performance Standards and Regulation Limitations:

New Source Performance Standards (NSPS): On March 8, 1974, EPA promulgated "New Source Performance Standards" for iron and steel plants. However, these standards pertain only to the basic oxygen furnace. As such, the electric furnaces described in Section D are controlled by individual state regulations covering general processes and/or specifically electric furnaces.

State Regulations for New and Existing Sources: Particulate emission regulations for varying process weight rates are expressed differently from state to state. There are four types of regulations applicable to electric arc furnaces. The four types of regulations are based on:

1. concentrations,
2. control efficiency,
3. gas volume, and
4. process weight.

Concentration Basis: Alaska, Delaware, Washington and New Jersey are representative of states that express particulate emission limitations in terms of grains/standard cubic foot and grains/dry standard cubic foot for general processes. The limitations for these four states are:

Alaska	-	0.05 grains/standard cubic foot
Delaware	-	0.20 grains/standard cubic foot
Washington	-	0.20 grains/dry standard cubic foot
Washington	-	0.10 grains/dry standard cubic foot (new)
New Jersey	-	0.02 grains/standard cubic foot

Iowa has a limitation specifically for electric furnaces in iron foundries. The limitation is:

Iowa	-	0.10 grains/standard cubic foot

Control Efficiency Basis: Utah requires general process industries to maintain 85% control efficiency over the uncontrolled emissions.

Gas Volume Basis: Texas expresses particulate emission limitations in terms of pounds/hr for specific stack flow rates expressed in actual cubic feet per minute. The Texas limitations for particulates are as follows:

1	- 10,000	acfm -	9.11	lbs/hr
10,000	- 100,000	acfm -	38.0	lbs/hr
10^5	- 10^6	acfm -	158.6	lbs/hr

Wisconsin and Michigan have regulations specifically for electric furnaces in iron foundaries. These limitations are expressed in terms of pounds per 1,000 pounds of flue gas. The limitations are:

Wisconsin - .11 lbs/1,000 lbs flue gas
Michigan - .10 lbs/1,000 lbs flue gas

Process Weight Rate Basis for New Sources: Several states have adopted particulate emission limitations for new sources with a process weight rate of 0.45 tons/hr. For sources with a process weight rate of 0.45 tons/hr, Massachusetts is representative of a most restrictive limitation, 1.3 lbs/hr (0.6 kg/hr) and New Hampshire is representative of a least restrictive limitation, 2.4 lbs/hr (1.1 kg/hr).

Process Weight Rate Basis for Existing Sources: The majority of states express general process limitations for existing sources in terms of lbs/hr for a wide range of process weight rates. For a process weight rate of 0.45 tons/hr, Florida is representative of a most restrictive limitation, 2.1 lbs/hr (1.0 kg/hr) and Missouri is representative of a least restrictive limitation, 4.1 lbs/hr (1.9 kg/hr).

Process Weight Rate Basis for Specific Sources: Pennsylvania has a general limitation on iron foundry melting operations. The limitation in Pennsylvania is determined by the equation:

$A = .76E^{.42}$ where A = allowable emissions lbs/hr
E = emission index = F x W lbs/hr
F = process factor, lbs/unit
W = production or charging rate, units/hr.

For the melting operation examined in Section D, melting 900 lbs/hr, substitution into the above equation results with an allowable limitation of 4.46 lbs/hr. Table VII-2 presents the uncontrolled and controlled emissions and limitations for electric arc furnaces.

TABLE VII-2

PARTICULATE EMISSIONS AND LIMITATIONS FROM CAST IRON FOUNDRIES (ELECTRIC FURNACES)

Type of Operation and Controls	% Control	Particulate Emissions (based on 3950 tons/yr) lbs/hr	kg/hr	Limitations[5] lbs/hr/kg/hr Iron Melting PA	General Process Industries New Sources NA	NH	Existing Sources Florida	Missouri	Utah 85% Control
Electric induction furnace, uncontrolled	0	--	--	4.46/2.02	1.3/0.6	2.4/1.1	2.1/1.0	4.1/1.9	-/-
Electric arc furnace, uncontrolled	0	0.68	0.31	4.46/2.02	1.3/0.6	2.4/1.1	2.1/1.0	4.1/1.9	.102/.046
Electric arc furnace, with baghouse	99	0.0068	0.0031	4.46/2.02	1.3/0.6	2.4/1.1	2.1/1.0	4.1/1.9	
Electric arc furnace, with electrostatic precipitator	99	0.0068	0.0031	4.46/2.02	1.3/0.6	2.4/1.1	2.1/1.0	4.1/1.9	

Potential Point Source Compliance and Emission Limitations: Electric arc furnaces melting 900 lbs/hour meet even the most restrictive emission limitations uncontrolled.

The Environment Reporter was used to update the emission limitations.

G. References:

Literature used to develop the preceding discussion on cast iron foundries using electric furnaces include the following:

(1) Systems Analysis of Emissions and Emissions Control in the Iron Foundry Industry, Volume I. Text. A.T. Kearney & Company, Inc. EPA Contract No. CPA 22-69-106. February, 1971.

(2) Systems Analysis of Emissions and Emissions Control in the Iron Foundry Industry, Volume II. Exhibits. A.T. Kearney & Company, Inc. EPA Contract No. CPA 22-69-106. February, 1971.

(3) Compilation of Air Pollutant Emission Factors (Second Edition). EPA. Publication No. AP-42. April, 1973.

(4) Hopper, T.G. Impact of New Source Performance Standards on 1985 National Emissions from Stationary Sources, Volume II. (Final Report). TRC - The Research Corporation of New England. EPA Contract No. 68-02-1382, Task #3, October 24, 1975.

(5) Analysis of Final State Implementation Plans; Rules and Regulations, EPA, Contract No. 68-02-0248, July, 1972. Mitre Corporation.

Three sources which were not used directly but which could provide additional information on cast iron foundries using electric furnaces include:

(6) Systems Analysis of Emissions and Emissions Control in the Iron Foundry Industry, Volume III, Appendix. A.T. Kearney & Company, Inc. EPA Contract No. CPA 22-69-106. February, 1971.

(7) Danielson, J.A. Air Pollution Engineering Manual, Second Edition AP-40, Research Triangle Park, North Carolina, EPA, May, 1973.

(8) Background Information for Establishment of National Standards of Performance for New Sources. Gray Iron Foundries (Draft). Environmental Engineering, Inc. and PEDCo Environmental Specialists, Inc. EPA Contract No. CPA 70-142, Task Order No. 2. March 15, 1971.

A. Source Category: VII Metallurgical Industry

B. Sub Category: Cast Iron Foundries (Cupola Furnace)

C. Source Description:

Cast iron foundries produce iron castings from molten iron through a number of distinct but interconnected operations which include:

(1) raw materials storage and handling,
(2) melting, and
(3) pouring into molds.

The process flow in the foundry melting department, which is the principal source of foundry emissions, is shown in Figure VII-4.(2)IV-9 Approximately 90% of the metal poured in cast iron foundries is melted in cupolas, but these are being replaced by electric furnaces.(4) Cast Iron Foundary (Furnaces)

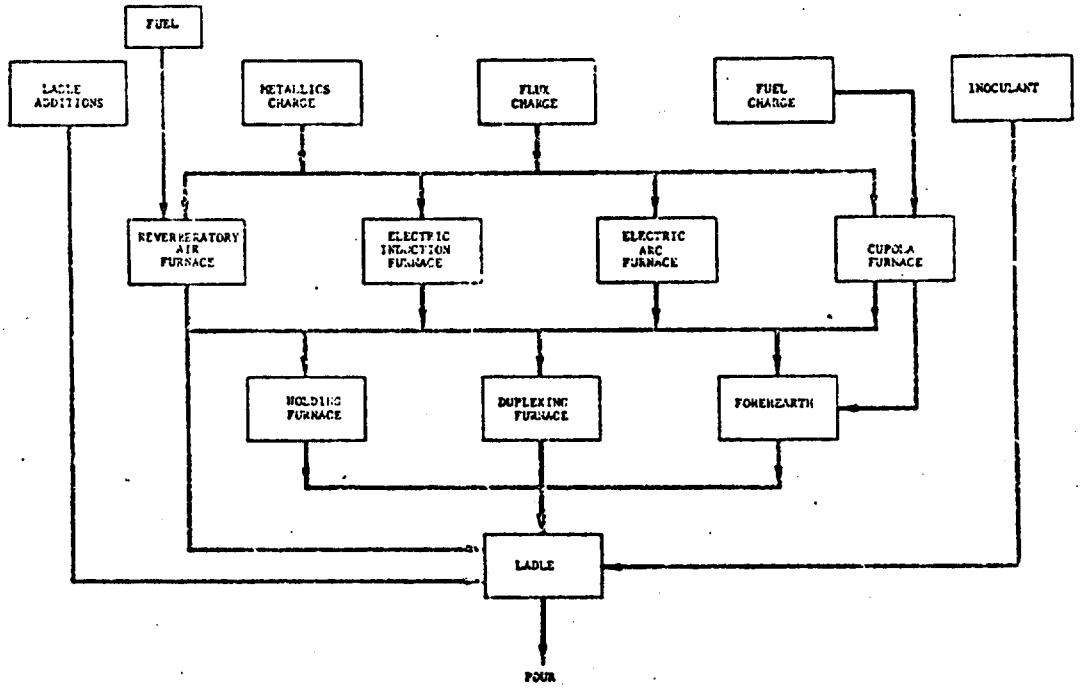

Figure VII-11: Process Flow Diagram
Melting Department

In its simplest form, the gray iron cupola is a vertical, hollow shaft having a steel shell lined with refractory brick or backed by a water curtain for temperature control. A charging door located above the bottom of the cupola admits the charge which consists of alternate layers of coke, iron materials, and flux. Tuyeres, located near the bottom of the cupola, admit air for combustion. Provision is made for removing slag and molten iron from openings below the tuyeres, the iron being tapped from the bottom level and slag skimmed from above the iron. Figure VII-5 shows a schematic diagram of a conventional lined cupola.(2)IV-16 The average cupola melting rate is 10.6 tons of iron per hour, or 93,000 tons per year.(4)257

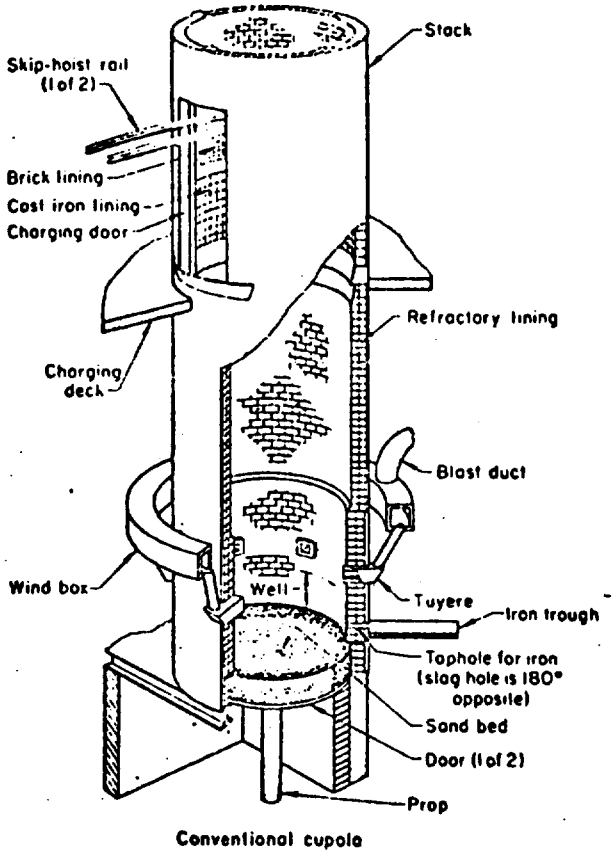

Figure VII-5: Illustration of Conventional Lined Cupola

D. Emission Rates:

As the source of molten iron for the production of castings, the cupola is the largest source of particulate emissions from cast iron foundries. Cupola emissions include fume, smoke, and gas as well as particulate matter. Particulate emissions from cupolas depend on the following:

(1) furnace design,
(2) charging practice,
(3) quantity and quality of charged materials,
(4) quantity of coke used,
(5) melting zone temperature,
(6) volume and rate of combustion air, and
(7) use of techniques such as oxygen enrichment and fuel injection.

Table VII-3 lists typical particulate emission rates from cupolas.[5] 7.10-1

TABLE VII-3

PARTICULATE EMISSIONS FROM CAST IRON FOUNDRIES (CUPOLAS)

Type of Operation & Controls	% Control	Particulate Emissions (Based on 93,000 tons/yr)			
		lb/ton	kg/MT	lb/hr	kg/hr
Cupola, Uncontrolled	0	17	8.5	180.	82
Cupola, with Wet Cap	52.9	8	4	85.	39
Cupola, with Impingement Scrubber	70.6	5	2.5	53.	24
Cupola, with High-Energy Scrubber	95.3	0.8	0.4	8.5	3.9
Cupola, with Electrostatic Precipitator	96.5	0.6	0.3	6.4	2.9
Cupola, with Baghouse	98.8	0.2	0.1	2.1	1.0

E. Control Equipment:

Because of the widespread use of cupolas for melting, the severity and complexity of the cupola emissions problem, and the generally high costs of collection equipment, efficient and cost effective control methods and techniques have necessarily been employed on cupolas more than on any other foundry process. Every known method of control has been tried with varying degrees of success. Among those collection systems which have been used are:

(1) wet caps,
(2) dry collectors,
(3) wet collectors,
(4) fabric filters, and
(5) electrostatic precipitators.

Wet caps are placed directly on top of cupola stacks and therefore require no gas-conducting pipes or pressure-increasing blowers. However, due to their low collection efficiencies, they no longer enjoy the popularity they once did.

Dry collectors such as centrifugal dust collectors remove 70%-80% of the particulate matter from the gas stream provided that the proportion of smaller particles is not too high.

High energy venturi scrubbers are capable of removing 95% of the particulate emissions from cupolas. Variable throat venturi scrubbers are especially useful for cupola operation because their pressure drop can be adjusted to achieve a desired efficiency.

Glass fabric filters are often selected as cupola control equipment when collection efficiencies approaching 99% are needed. Fabric filter units can be installed to handle more than one cupola if desired.

Electrostatic precipitators, which also reduce particulate emissions by more than 95%, have been used in very few applications in the United States. This is due largely to comparatively high capital costs as well as operating and maintenance problems.

Table VII-3 shows both the uncontrolled and controlled particulate emissions from foundry cupolas.

F. New Source Performance Standards and Regulation Limitations:

New Source Performance Standards (NSPS): No New Source Performance Standards have been promulgated for cupola furnaces.

State Regulations for New and Existing Sources: Particulate emission regulations for varying process weight rates are expressed differently from state to state. There are four types of regulations that are applicable to the cupola furnace. The four types of regulations are based on:

1. concentration,
2. control efficiency,
3. gas volume, and
4. process weight.

Concentration Basis: Alaska, Delaware, Washington and New Jersey are representative of states that express particulate emission limitations in terms of grains/standard cubic foot and grains/dry standard cubic foot for general processes. The limitations for these four states are:

Alaska	-	0.05 grains/standard cubic foot
Delaware	-	0.20 grains/standard cubic foot
Washington	-	0.20 grains/dry standard cubic foot
Washington	-	0.10 grains/dry standard cubic foot (new)
New Jersey	-	0.02 grains/standard cubic foot

Massachusctts, Michigan and Connecticut have regulations specifically for iron foundry cupolas.

Massachusetts	-	0.10 lbs/1000 lbs flue gas (production foundry)
Massachusetts	-	0.40 lbs/1000 lbs flue gas (jobbing foundry)
Michigan 0-10 tons/hr	-	0.40 lbs/1000 lbs flue gas
Michigan 10-20 tons/hr	-	0.25 lbs/1000 lbs flue gas
Michigan over 20 tons/hr	-	0.15 lbs/1000 lbs flue gas
Connecticut	-	0.8 lbs/1000 lbs of flue gas or 85% reduction

Control Efficiency Basis: Utah requires general process industries to maintain 85% control efficiency over the uncontrolled emissions.

Gas Volume Basis: Texas expresses particulate emission limitations in terms of pounds/hour for specific stack flow rates expressed in actual cubic feet per minute. The Texas limitations for particulates are as follows:

1	- 10,000	acfm -	9.11 lbs/hr
10,000	- 100,000	acfm -	38.00 lbs/hr
10^5	- 10^6	acfm -	158.6 lbs/hr

Process Weight Rate Basis for New and Existing Specific Sources: Several states have adopted specific regulations for cupola emissions expressed in terms of pounds/hr for a wide range of process weight rates. For a process rate of 10.6 tons/hour, New Hampshire's limitation of 19.8 lbs/hr (9.0 kg/hr) for new sources is representative of a stringent limitation. The following states are representative of states that have limitations for existing cupolas with a 10.6 ton/hr process weight rate:

New Hampshire	-	24.4 lbs/hour (11.1 kg/hr)
Georgia	-	25.8 lbs/hour (11.7 kg/hr)
Illinois	-	25.1 lbs/hour (11.4 kg/hr)
Indiana	-	24.7 lbs/hour (11.2 kg/hr)
Oklahoma	-	25.1 lbs/hour (11.4 kg/hr)
Tennessee	-	25.1 lbs/hour (11.4 kg/hr)

Pennsylvania does not have a regulation specifically for cupolas, but does have one for iron foundry melting. The limitation in Pennsylvania is determined by the equation:

$A = 0.76E^{0.42}$ where A = Allowable emissions, lbs/hr
E = Emission index = F x W lbs/hr
F = Process factor, lbs/unit
W = Production or charging rate, units/hr

For a cupola melting 10.6 tons of metal per hour, substitution into the equation results in an allowable emission limitation of 10.6 lbs/hr (4.8 kg/hr). Table VII-4 presents uncontrolled and controlled emissions and limitations for cupolas in cast iron foundries.

TABLE VII-4

PARTICULATE EMISSIONS AND LIMITATIONS FROM CAST IRON FOUNDRIES (CUPOLAS)

Type of Operation & Control	% Control	Particulate Emissions (Based on 92,856 tons/yr) lb/hr	kg/hr	Limitations[7] lb/hr / kg/hr: Iron Foundries PA	Cupolas: New Sources NH	Existing Sources GA	Existing Sources NH	CT 85% Control
Cupola, Uncontrolled	0	180	82	10/6/4.8	19.9/9.1	25.8/11.7	24.4/11.1	27/14.8
Cupola, with Wet Cap	52.9	85	39	10.6/4.8	19.9/9.1	25.8/11.7	24.4/11.1	27/14.8
Cupola, with Impingement Scrubber	70.6	53	24	10.6/4.8	19.9/9.1	25.8/11.7	24.4/11.1	27/14.8
Cupola, with High-Energy Scrubber	95.3	8.5	3.9	10.6/4.8	19.9/9.1	25.8/11.7	24.4/11.1	27/14.8
Cupola, with Electro-Static Precipitator	96.5	6.4	2.9	10.6/4.8	19.9/9.1	25.8/11.7	24.4/11.1	27/14.8
Cupola, with Baghouse	98.8	2.1	1.0	10.6/4.8	19.9/9.1	25.8/11.7	24.4/11.1	27/14.8

Potential Source Compliance and Emission Limitations: For the typical cupola described in Section D, melting 10.6 tons/hour, baghouses, scrubbers, and electrostatic precipitators are capable of controlling emissions to meet even the most stringent regulations.

The Environment Reporter was used to update the emission limitations.

G. References:

Sources listed below were used to develop the preceding discussion on cupola furnaces in iron casting foundries:

(1) Particulate Pollutant System Study, Volume III - Handbook of Emission Properties, Midwest Research Institute, EPA, Contract No. CPA 22-69-104, May 1, 1971.

(2) Systems Analysis of Emissions and Emissions Control in the Iron Foundry Industry, Volume II, Exhibits, A. T. Kearney & Company, Inc., EPA, Contract No. CPA 22-69-106, February 1971.

(3) Hopper, T. G., Impact of New Source Performance Standards on 1985 National Emissions from Stationary Sources, Volume II (Final Report), TRC - The Research Corporation of New England, EPA, Contract No. 68-02-1382, Task #3, October 24, 1975.

(4) Danielson, J. A., Air Pollution Engineering Manual, Second Edition, AP-40, Research Triangle Park, North Carolina, EPA, May 1973.

(5) Compilation of Air Pollutant Emission Factors (Second Edition), EPA, Publication No. AP-42, April 1973.

(6) Systems Analysis of Emissions and Emissions Control in the Iron Foundry Industry, Volume I, Text, A. T. Kearney & Company, Inc., EPA, Contract No. CPA 22-69-106, February 1971.

(7) Analysis of Final State Implementation Plans - Rules and Regulations, EPA, Contract No. 68-02-0248, July 1972, Mitre Corporation.

Two sources were not used directly but could provide additional information on cupolas in cast iron foundries:

(8) Background Information for Establishment of National Standards of Performance for New Sources, Gray Iron Foundries (Draft), Environmental Engineering, Inc. and PEDCO Environmental Specialists, Inc., EPA, Contract No. CPA 70-142, Task Order No. 2, March 15, 1971.

(9) Systems Analysis of Emissions and Emissions Control in the Iron Foundry Industry, Volume III, Appendix, A. T. Kearney & Company, Inc., EPA, Contract No. CPA 22-69-106, February 1971.

A. Source Category: VII Metallurgical Industry

B. Sub Category: Cast Iron Foundries (Core Ovens)

C. Source Description:

Cores for iron castings are normally made of silica sand and organic or inorganic binders. The core making process is illustrated in the flow diagram in Figure VII-6.(2)IV-15 Sand, core premixes, resins, binders, and other additives are measured by weight or volume and added to the mixer at appropriate times in the mixing cycle. The core sand mix is then discharged from the mixer and transferred to the core machines by conveyor or totebox.

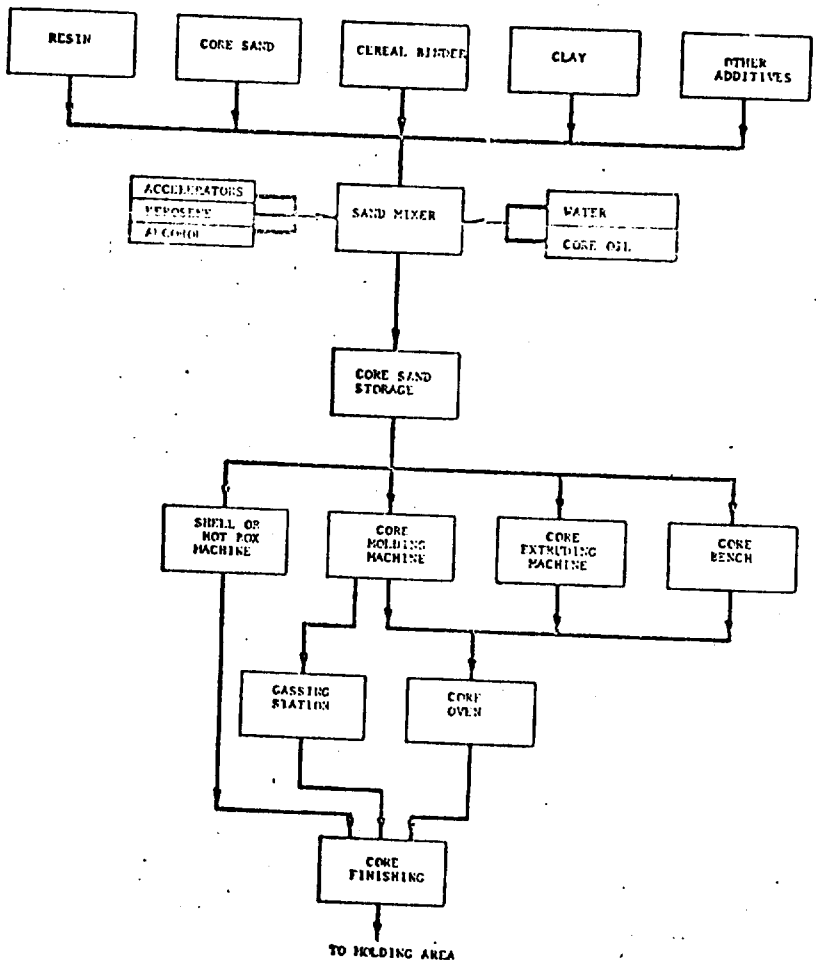

Figure VII-6: Process Flow Diagram - Core Making

After forming, those cores that achieve a primary or complete set while in the core machine require no special handling, while those requiring an oven bake or gasing are placed on a flat core plate or formed core dryer providing rigid support.

Oil sand cores requiring baking are transferred to gas or oil-fired ovens. Light oil fractions and moisture in the sand are evaporated, followed by oxidation and polymerization of the core oil. Baking makes the cores strong enough so that they can be handled while the mold is being made and will resist erosion and deformation by metal when the mold is being filled.

There are several types of core ovens in use depending on the size, shape, and type of core that is needed. The five types of core ovens that find the most widespread use are:

1. shelf ovens,
2. drawer ovens,
3. portable-rack ovens,
4. car ovens, and
5. conveyor ovens.

Most ovens are operated at temperatures between 300° and 400°F (149° and 204°C) for baking periods ranging from less than an hour to overnight. The weight of cores baked at any one time may range from less than one hundred pounds to more than a ton.

D. Emission Rates:

The air contaminants discharged from core ovens consist of organic acids, aldehydes, hydrocarbon vapors, and particulate matter. The vapors are the result of the evaporation of hydrocarbon solvents and the light ends usually present in core oils. The organic acids and aldehydes are the result of partial oxidation of the various organic material in the cores.

In general, emission rates are low, especially from small- and medium-sized ovens operating at 400°F (204°C) or less. Large amounts of emissions can generally be expected from ovens operated at higher temperatures and from which the cores baked contain larger than normal amounts of core oils. Table VII-5 summarizes the particulate and hydrocarbon emissions from core ovens.(4)(2)314Core Ovens,Iron Fndry

TABLE VII-5

PARTICULATE AND HYDROCARBON EMISSIONS FROM CORE OVENS IN CAST IRON FOUNDRIES

Type of Operation & Control	% Control	Particulate Emissions+				Hydrocarbon Emissions+			
		lb/ton*	kg/MT	lb/hr	kg/hr	lb/ton*	kg/MT	lb/hr	kg/hr
Core Ovens, Uncontrolled	0	3.48	1.74	0.20	0.10	16.9	8.45	1.0	0.5
Core Ovens, With Afterburner	90	.35	.17	.02	.01	1.69	0.85	0.05	0.02

* Ton of Cores Baked
\+ Based on Actual Emission Data

E. Control Equipment:

Most core ovens are vented directly to the atmosphere through a stack, as they usually do not require air pollution control equipment. Excessive emissions from core ovens have been reduced by modifying the composition of the core binders, and lowering the baking temperatures. When neither of these approaches is feasible, afterburners are the only control devices that have proved effective. Afterburners that have been used for controlling emissions from core ovens are predominantly of the direct flame type. Both controlled and uncontrolled particulate and hydrocarbon emissions from core ovens are shown in Table VII-5.

F. New Source Performance Standards and Regulation Limitations:

New Source Performance Standards (NSPS): No New Source Performance Standards have been promulgated for core making in cast iron foundries.

State Regulations for Existing Sources: Particulate emission regulations for varying process weight rates are expressed differently from state to state. There are four types of regulations that are applicable to core making processes. The four types of regulations are based on:

1. concentration,
2. control efficiency,
3. gas volume, and
4. process weight.

Concentration Basis: Alaska, Delaware, Pennsylvania, Washington and New Jersey are representative of states that express particulate emission limitations in terms of grains/standard cubic foot and grains/dry standard cubic foot for general processes. The limitations for these five states are:

Alaska	-	0.05 grains/standard cubic foot
Delaware	-	0.20 grains/standard cubic foot
Pennsylvania	-	0.04 grains/dry standard cubic foot, when gas volume is less than 150,000 dscfm
Pennsylvania	-	0.02 grains/dry standard cubic foot, when gas volumes exceed 300,000 dscfm
Washington	-	0.20 grains/dry standard cubic foot
Washington	-	0.10 grains/dry standard cubic foot (new)
New Jersey	-	0.02 grains/standard cubic foot

Control Efficiency Basis: Utah requires general process industries to maintain 85% control efficiency over the uncontrolled emissions.

Gas Volume Basis: Texas expresses particulate emission limitations in terms of pounds/hour for specific stack flow rates expressed in actual cubic feet per minute. The Texas limitations for particulates are as follows:

1	-	10,000 acfm	-	9.11 lbs/hr
10,000	-	100,000 acfm	-	38.00 lbs/hr
10^5	-	10^6 acfm	-	158.6 lbs/hr

Process Weight Rate Basis for New Sources: Several states have adopted process limitations in terms of pounds per hour as a function of a specific process weight rate. For the core oven process described in Section D, an average process weight of 115 lbs/hour was used. For a process weight rate of this size, Massachusetts is representative of a most restrictive limitation, 0.3 lbs/hr (0.14 kg/hr) and New Hampshire is representative of a least restrictive limitation, 1.2 lbs/hr (.60 kg/hr).

Process Weight Rate Basis for Existing Sources: The majority of states express general process limitations for particulate emissions in lbs/hr for a wide range of process weight rates. For a process weight rate of 115 lbs/hr, New York is representative of a most restrictive limitation, 0.54 lbs/hr (0.24 kg/hr) and Georgia is representative of a least restrictive limitation, 0.6 lbs/hr (0.27 kg/hr).

State Regulations for New and Existing Sources for Hydrocarbons: Currently, hydrocarbon emission regulations are patterned after Los Angeles Rule 66 and Appendix B type legislation. Organic solvent useage is categorized by three basic types. These are, (1) heating of articles by direct flame or baking with any organic solvent, (2) discharge into the atmosphere of photochemically reactive solvents by devices that employ or apply the solvent, (also includes air or heated drying of articles for the first twelve hours after removal from #1 type device) and (3) discharge into the atmosphere of non-photochemically reactive solvents. For the purposes of Rule 66, reactive solvents are defined as solvents of more than 20% by volume of the following:

1. A combination of hydrocarbons, alcohols, aldehydes, esters, ethers or ketones having an olefinic or cyclo-olefinic type of unsaturation: 5 per cent
2. A combination of aromatic compounds with eight or more carbon atoms to the molecule except ethylbenzene: 8 per cent
3. A combination of ethylbenzene, ketones having branched hydrocarbon structures, trichloroethylene or tolune: 20 per cent

Rule 66 limits emissions of hydrocarbons according to the three process types. These limitations are as follows:

Process	lbs/day &	lbs/hour
1. heated process	15	3
2. unheated photochemically reactive	40	8
3. non-photochemically reactive	3000	450

Appendix B (Federal Register, Vol. 36, No. 158 - Saturday, August 14, 1971) limits the emission of photochemically reactive hydrocarbons to 15 lbs/day and 3 lbs/hr. Reactive solvents can be exempted from the regulation if the solvent is less than 20% of the total volume of a water based solvent. Solvents which have shown to be virtually unreactive are, saturated halogenated hydrocarbons, perchloroethylene, benzene, acetone and c_1-c_5 n-paraffins.

For both Appendix B and Rule 66 type legislation, if 85% control has been demonstrated the regulation has been met by the source even if the lbs/day and lbs/hour values have been exceeded. Most states have regulations that limit the emissions from handling and use of organic solvents. Alabama, Connecticut and Ohio have regulations patterned after Los Angeles Rule 66. Indiana and Louisiana have regulations patterned after Appendix B. Some states such as North Carolina have an organic solvent regulation which is patterned after both types of regulations.

Table VII-6 presents controlled and uncontrolled particulate and hydrocarbon emissions and limitations from core ovens.

TABLE VII-6

PARTICULATE AND HYDROCARBON EMISSIONS AND LIMITATIONS FROM CORE OVENS

Type of Operation & Control	% Control	Particulate Emissions (Based on 503 tons/yr)		Hydrocarbon Emissions (Based on 503 tons/yr)		Limitations lb/hr / kg/hr General Processes				
						Particulate			Hydrocarbon	
		lbs/hr	kg/hr	lbs/hr	kg/hr	MA	Georgia	UT 85% Control	Heated	
Core Ovens, Uncontrolled	0	.20	.10	1.0	0.5	0.3/1.4	0.6/0.27	.03/.01	3	1.4
Core Ovens, with Afterburner	90	.02	.01	.05	0.02	0.3/1.4	0.6/0.27	.03/.01	3	1.4

Potential Source Compliance and Emission Limitations: Most core ovens are vented directly to the atmosphere through a stack and do not require air pollution control equipment. From Table VII-6, it can be seen that even the most restrictive limitations can be met without control equipment.

The Environment Reporter was used to update emission regulations.

G. References:

The following literature was used to develop the information on core ovens:

(1) Systems Analysis of Emissions and Emissions Control in the Iron Foundry Industry, Volume I, Text, A. T. Kearney & Company, Inc., EPA, Contract No. CPA 22-69-106, February 1971.

(2) Systems Analysis of Emissions and Emission Control in the Iron Foundry Industry, Volume II, Exhibits, A. T. Kearney & Company, Inc., EPA, Contract No. CPA 22-69-106, February 1971.

(3) Danielson, J. A., Air Pollution Engineering Manual, Second Edition, AP-40, Research Triangle Park, North Carolina, EPA, May 1973.

(4) Hopper, T. G., Impact of New Source Performance Standards on 1985 National Emissions from Stationary Sources, Volume II, (Final Report), TRC - The Research Corporation of New England, EPA, Contract No. 68-02-1382, Task #3, October 1975.

(5) Analysis of Final State Implementation Plans, Rules, and Regulations, EPA, Contract No. 68-02-0248, July 1972, Mitre Corporation.

(6) Priorization of Air Pollution from Industrial Surface Coating Operations, Monsanto Research Corporation, Contract No. 68-02-0320, February 1975.

Two other references were consulted but not directly used to develop this section on core ovens.

(7) Particulate Pollutant System Study, Volume III - Handbook of Emission Properties, Midwest Research Institute, EPA, Contract No. CPA 22-69-104, May 1, 1971.

(8) Background Information for Establishment of National Standards of Performance for New Sources, Gray Iron Foundries, (Draft), Environmental Engineering, Inc. and PEDCO Environmental Specialists, Inc., EPA, Contract No. CPA 70-142, Task Order No. 2, March 15, 1971.

A. Source Category: VII Metallurgical Industry

B. Sub Category: Iron and Steel Plants (Electric Arc Furnaces)

C. Source Description:

Iron and steel plants contain a wide range of processes from preparation of raw materials to production of a semifinished product for sale or further use, as shown in the iron and steel plant flow diagram in Figure VII-7.[1]2

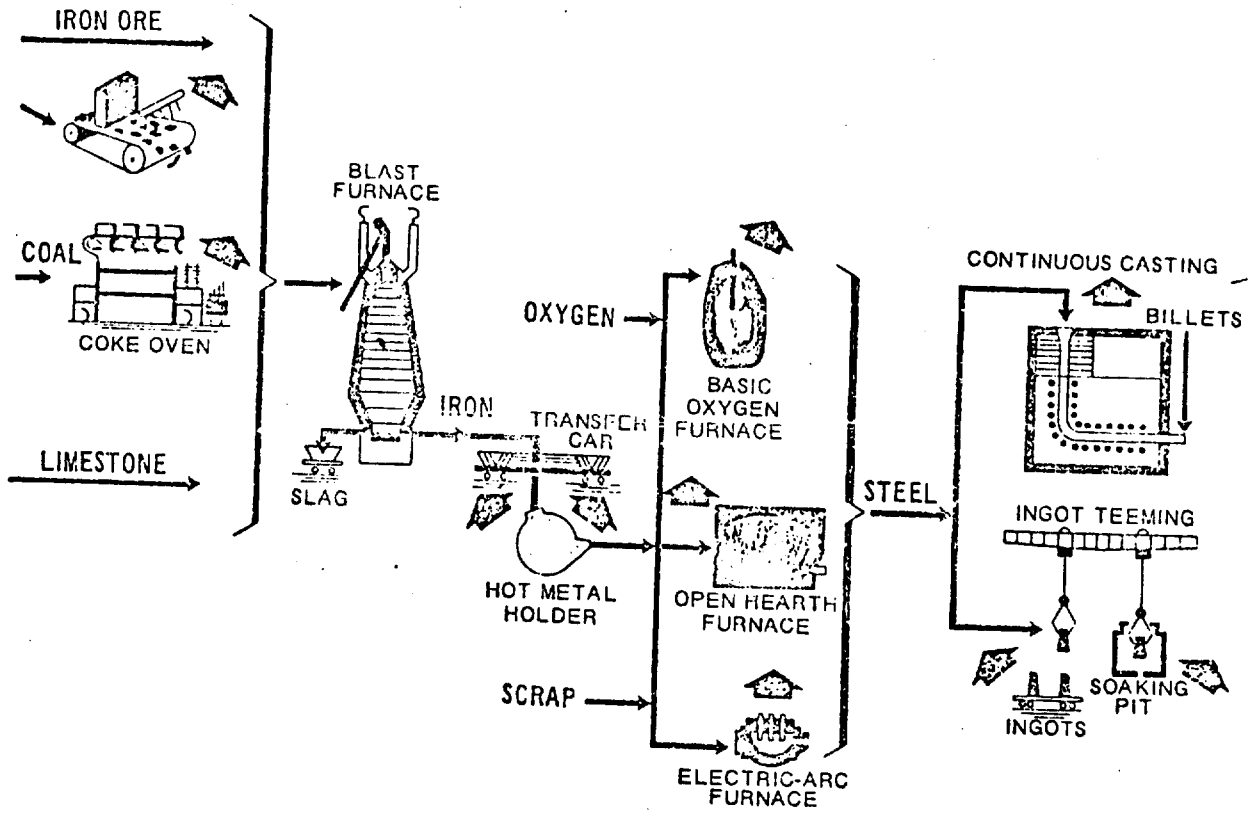

Figure VII-7: Flow Diagram of an Iron and Steel Plant

The steel refining process removes undesirable elements in the metal by chemical oxidation-reduction and is the heart of steel plants' processes. This is accomplished in an open-hearth furnace, an electric furnace, or a BOF. Electric arc furnaces are used where small quantities of pig iron are available and where remelting of steel scrap or small heats of special alloys are required. Normally the furnace charge is 100% steel scrap plus alloying agents and fluxes.

The electric arc furnace is a cylindrical refractory-lined vessel with carbon electrodes suspended from above. With the electrodes retracted, the roof is rotated to permit the charge of scrap steel into the furnace. Alloying and slag materials are added through doors on the side of the furnace. The current is switched to the

electrodes as they descend into the furnace. The heat generated by the arc that crosses between the electrodes through the scrap melts the metal. The slag and melt are poured by tilting the furnace. Figure VII-8 shows the basic elements of the electric-arc furnace.([1])[8]

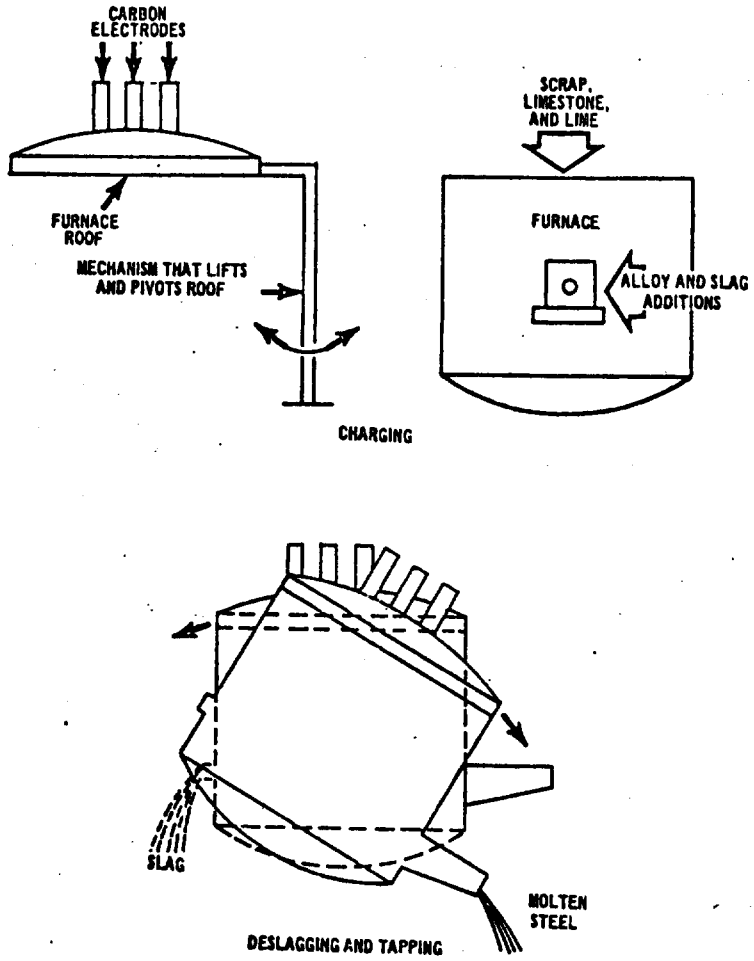

Figure VII-8: Electric-Arc Steel Furnace

The electric-arc furnace lends itself to accurate control of temperature and time of reaction for producing alloys. The furnace is usually charged with cold steel scrap, but occasionally iron ore pellets or molten metal are charged. After the addition of the metal, fluxes, and other materials, the operation consists of three phases:

(1) oxidation of undesirable elements and their removal as slag;

(2) removal of carbon by reaction with oxygen;
(3) addition of materials to bring the alloy within the desired specifications.

Electric arc furnaces vary in size, with capabilities ranging from 2 to 400 tons per batch. Each batch operation takes 1.5 to10 hours per cycle, consisting of:

(1) melt-down;
(2) boiling;
(3) refining;
(4) pouring.(2)21

A typical electric arc furnace will produce 245 tons of refined steel per day, or 89,425 tons annually.(2)4

D. Emission Rates:

Particulate emissions generated during electric furnace steel-making originate from the following:

(1) physical nature of the scrap used;
(2) scrap cleanliness;
(3) nature of the melting operation;
(4) oxygen lancing;
(5) pouring (tapping).

Most of the emissions originate during charging and refining. These emissions include iron oxide fumes, sand fines, graphite, and metal dust. Particulate emissions from electric arc furnaces range from 4 to 30 pounds per ton of iron processed, with 10.6 pounds per ton as the median. (3)247 These emissions are summarized in Table VII-7. (3)247

TABLE VII-7

PARTICULATE EMISSIONS FROM IRON AND STEEL PLANTS

Type of Operation & Control	% Control	Particulate Emissions (Based on 89,425 Tons/yr)			
		lb/Ton	kg/MT	lb/hr	kg/hr
Electric Arc Furnace, Uncontrolled	0	10.6	5.3	108	49
Electric Arc Furnace, with Baghouse	98-99	0.21-0.11	0.11 -0.055	2.14-1.12	0.97-0.51
Electric Arc Furnace, with Venturi Scrubber	94-98	0.64-0.21	0.32 -0.11	6.52-2.14	2.90-0.97
Electric Arc Furnace, with Electrostatic Precipitator	92-98	0.85-0.21	0.43 -0.11	8.67-2.14	3.93-0.97

E. Control Equipment:

Particulate emissions from electric arc furnaces are captured with a hooding arrangement at the furnace. The particulates are conveyed to a collection device that has a high collection efficiency for small particles. The four types of hooding arrangements include:

1. canopy-type hood, and/or building evacuation
2. plenum roof,
3. side-draft hood, and
4. direct furnace roof tap.

Fabric filters are the most commonly used device to remove particulates. Venturi scrubbers and electrostatic precipitators are also used. When fabric filters are used, the hot furnace gas must be cooled by water sprays, radiant coolers, dilution air, or some combination of these to prevent degradation of the fabric. When a precipitator is used, the gas is humidified to maximize the efficiency of the precipitator. The scrubber does not require any special treatment of the exhaust gas. Removal efficiencies of these devices range from 92 to 99 percent as shown in Table VII-7.(4)7.13-2

F. New Source Performance Standards and Regulation Limitations:

New Source Performance Standards (NSPS): On March 8, 1974, EPA promulgated "New Source Performance Standards" for iron and steel plants in the Federal Register. These standards are for basic oxygen furnaces. As such, electric arc furnaces described in Section D are controlled by individual state regulations covering general processes and/or specifically electric arc furnaces.

State Regulations for New and Existing Sources: Particulate emission regulations for varying process weight rates are expressed differently from state to state. There are four types of regulations applicable to electirc arc furnaces. The four types of regulations are based on:

1. concentrations,
2. control efficiency,
3. gas volume, and
4. process weight.

Concentration Basis: Alaska, Delaware, Washington and New Jersey are representative of states that express particulate emission limitations in terms of grains/standard cubic foot and grains/dry standard cubic foot for general processes. The limitations for these four states are:

Alaska	-	0.05 grains/standard cubic foot
Delaware	-	0.20 grains/standard cubic foot
Washington	-	0.20 grains/dry standard cubic foot
Washington	-	0.10 grains/dry standard cubic foot (new)
New Jersey	-	0.02 grains/dry standard cubic foot

Iowa has a limitation specifically for electric furnaces in iron foundries. The limitation is:

Iowa - .10 grains/standard cubic foot

Four states have regulations for iron and steel plants in general. Their limitation is expressed in terms of grains/dry standard cubic foot. The states and limitations are:

Colorado - .022 grains/dry standard cubic foot
Idaho - .022 grains/dry standard cubic foot
Kentucky - .022 grains/dry standard cubic foot
Wisconsin - .022 grains/dry standard cubic foot

Control Efficiency Basis: Utah requires general process industries to maintain 85% control efficiency over the uncontrolled emissions.

Gas Volume Basis: Texas expresses particulate emission limitations in terms of pounds/hr for specific stack flow rates, expressed in actual cubic feet per minute. The Texas limitations for particulates are as follows:

1	- 10,000 acfm	-	9.11 lbs/hr
10,000	- 100,000 acfm	-	38.0 lbs/hr
10^5	- 10^6 acfm	-	158.6 lbs/hr

Process Weight Rate Basis for New Sources: Several states have adopted general process limitations for new sources with process weight rates of 10.2 tons/hour. For process of this size, Illinois is representative of a most restrictive limitation, 8.8 lbs/hr (4.0 kg/hr) and New Hampshire is representative of a least restrictive limitation, 19.4 lbs/hr (8.8 kg/hr).

Process Weight Rate Basis for Existing Sources: The majority of states have adopted general process limitations for existing sources for a wide range of process weight rates. For a process with a weight rate of 10.2 tons/hour, Connecticut is representative of a most restrictive limitation, 9.9 lbs/hr (4.5 kg/hr) and Illinois is representative of a least restrictive limitation, 12.3 lbs/hr (5.6 kg/hr).

Process Weight Rate Basis for Specific Sources:
Pennsylvania has a general limitation for iron foundry melting operations. The limitation in Pennsylvania is determined by the equation:

$A = .76E^{.42}$ where A = allowable emissions, lbs/hr
E = emission index = F x W lbs/hr
F = process factor, lbs/unit
W = production or charging rates, units/hr

For the typical plant discussed in Section D, refining 10.2 tons per hour, substitution into the equation will result in an allowable limitation of

10.4 lbs/hr (4.7 kg/hr).

Table VII-8 presents the controlled and uncontrolled emissions and limitations from electric arc furnaces.

TABLE VII-8

PARTICULATE EMISSIONS AND LIMITATIONS FROM ELECTRIC ARC FURNACES

Type of Operation & Control	% Control	Particulate Emissions (Based on 89,425 tons/yr) lbs/hr	kg/hr	Limitations[5] lbs/hr/kg/hr General Process Industries New Sources Ill.	NH	Existing Sources Conn.	Ill.	UT 85% Control	PA
Electric Arc Furnace, Uncontrolled	0	108	49	8.8/4.0	19.4/8.8	9.9/4.5	12.3/5.6	16.2/7.4	10.4/4.7
Electric Arc Furnace, With Baghouse	98-99	2.14-1.12	0.97-0.51	8.8/4.0	19.4/8.8	9.9/4.5	12.3/5.6	16.2/7.4	10.4/4.7
Electric Arc Furnace, With Venturi Scrubber	94-98	6.52-2.14	2.96-0.97	8.8/4.0	19.4/8.8	9.9/4.5	12.3/5.6	16.2/7.4	10.4/4.7
Electric Arc Furnace, With Electrostatic Precipitator	92-98	8.67-2.14	3.93-0.97	8.8/4.0	19.4/8.8	9.9/4.5	12.3/5.6	16.2/7.4	10.4/4.7

Potential Source Compliance and Emission Limitations: Existing control technology using either baghouses, venturi scrubbers, or electrostatic precipitators is adequate to limit emissions from a 10.2 ton/hour electric arc furnace to current limitations.

The Environment Reporter was used to update emission regulations.

G. References:

Literature used to develop the preceding discussion on electric arc furnaces in the iron and steel industry are listed below:

1. Background Information for Standards of Performance: Electric Arc Furnace in the Steel Industry, Volume I: Proposed Standards, Emission Standards and Engineering Division, EPA, 450/2-74-017a, October 1974.

2. Scheuneman, Jean L., M. D. High, W. E. Bye, R. A. Taft, Air Pollution Aspects of the Iron and Steel Industry, U. S. Department of Health, Education, and Welfare, Public Health Service Publication No. 999-AP-1, June 1973.

3. Danielson, J. A., Air Pollution Engineering Manual, Second Edition, AP-40, Research Triangle Park, North Carolina, EPA, May 1973.

4. Compilation of Air Pollutant Emission Factors, Second Edition, EPA, Publication No. AP-42, April 1973.

5. Analysis of Final State Implementation Plans - Rules and Regulations, EPA, Contract 68-02-0248, July 1972, Mitre Corporation.

Several other sources could provide additional useful information on electric arc furnaces in the iron and steel industry. These include:

6. Particulate Pollutant System Study, Volume III - Handbook of Emission Properties, Midwest Research Institute, EPA, Contract No. CPA-22-69-104, May 1, 1971.

7. Background Information for Proposed New Source Standards: Asphalt Concrete Plants, Petroleum Refineries, Storage Vessels, Secondary Lead Smelters and Refineries, Brass or Bronze Ingot Production Plants, Iron and Steel Plants, Sewage Treatment Plants, Volume I, Main Text, EPA, Office of Air Quality Planning and Standards, June 1973.

8. McGannon, H. E., The Making, Shaping, and Treating of Steel, United States Steel Corporation, 1964.

A. Source Category: VII Metallurgical Industry

B. Sub Category: Iron and Steel Plants (Scarfing)

C. Source Description:

Scarfing removes surface defects in steel slabs, blooms, ingots, and billets. Removal is accomplished by the use of oxygen torches which direct jets of oxygen at the surface of the hot steel, causing localized melting and subsequent oxidation of the steel. In addition to the oxygen, a fuel gas is used to elevate the temperature of a spot on the steel surface so the oxygen and steel will combine chemically. Scarfing operations are carried out either manually or mechanically.

The largest tonnage of all conditioned steel is processed by hand scarfing of cold steel. Mechanical scarfing of hot steel is accomplished with scarfing torches that pass through the mill. The slabs pass the cutting torches on conveyors at 80 to 12(fpm (.41 m/sec to .16 m/sec), and a cut of about 1/16 inch (1.6 mm) is made on two sides of the slab. The sparks and fumes are blown downward by compressed air toward a target plate which is continuously sprayed with water.

The scarfing operation is performed on approximately 50% of all steel produced, or 87.3 x 10^6 tons per year.(2)C-116

D. Emission Rates:

Particulate emissions from scarfing operations are fine iron oxide dust. The average production rate of steel making plants is 923,000 tons per year, or 105 tons per hour.(4)Table A3-A5, (2)IV-2

Approximately 50% of this steel, or 462,000 tons is scarfed annually by each plant. Particulate emissions from scarfing operations have been estimated at 3.0 lbs/ton, as shown in Table VII-9.(3) 97

TABLE VII-9

PARTICULATE EMISSIONS FROM IRON & STEEL SCARFING

Type of Operation & Control	% Control	Particulate Emissions (Based on 462,000 Tons/Hr)			
		lb/Ton	kg/MT	lb/hr	kg/hr
Iron & Steel Scarfing	0	3.0	1.5	158	71.7
Iron & Steel Scarfing, with Settling Chamber, Electrostatic Precipitator, or High Energy Scrubber	90	0.30	0.15	16	7.2

E. Control Equipment:

Control of particulate emissions from scarfing operations is desirable; only 75% of these operations are controlled.[3]222 Plants utilizing control equipment use baffled settling chambers, electrostatic precipitators, or high energy scrubbers. The control efficiency of these devices has been estimated to be 90%.[3]222 The controlled and uncontrolled emissions from scarfing operations are shown in Table VII-9.

F. New Source Performance Standards and Emission Limitations:

New Source Performance Standards (NSPS): No New Source Performance Standards have been promulgated for scarfing operations.

State Regulations for New and Existing Sources: Particulate emission regulations for varying process weight rates are expressed differently from state to state. There are four types of regulations that are applicable to scarfing operations. The four types of regulations are based on:

1. concentration,
2. control efficiency,
3. gas volume, and
4. process weight.

Concentration Basis: Alaska, Delaware, Washington and New Jersey are representative of states that express particulate emission limitations in terms of grains/standard cubic foot and grains/dry standard cubic foot for general processes. The limitations for these four states are:

Alaska	-	0.05 grains/standard cubic foot
Delaware	-	0.20 grains/standard cubic foot
Washington	-	0.20 grains/dry standard cubic foot
Washington	-	0.10 grains/dry standard cubic foot (new)
New Jersey	-	0.02 grains/standard cubic foot

Four states have regulations applicable to general operations at iron and steel plants. Their limitations are expressed in terms of grains/dry standard cubic foot. The four states and their limitations are:

Colorado	-	0.022 grains/dry standard cubic foot
Idaho	-	0.022 grains/dry standard cubic foot
Kentucky	-	0.022 grains/dry standard cubic foot
Wisconsin	-	0.022 grains/dry standard cubic foot

Control Efficiency Basis: Utah required general processes to maintain 85% control efficiency over uncontrolled emissions.

Gas Volume Basis: Texas expresses particulate emission limitations in terms of pounds/hour for specific stack flow rates expressed in actual cubic feet per minute. The Texas limitations for particulates are as follows:

1	- 10,000	acfm -	9.11 lbs/hr
10,000	- 100,000	acfm -	38.00 lbs/hr
10^5	- 10^6	acfm -	158.6 lbs/hr

Process Weight Rate Basis for New Sources: Several states have adopted general process limitations for new sources with process weight rates of 52.7 tons/hour. For a process weight rate of this size, Massachusetts is representative of a most restrictive limitation, 22.6 lbs/hr (10.2 kg/hr) and Georgia is representative of a least restrictive limitation, 45.8 lbs/hr (20.8 kg/hr).

Process Weight Rate Basis for Existing Sources: The majority of states express general process limitations for existing sources in terms of pounds per hour emitted for a wide range of process weight rates. For a process weight rate of 52.7 tons/hour, Colorado is representative of a most restrictive limitation, 41.9 lbs/hr (19.0 kg/hr) and Mississippi is representative of a least restrictive limitation, 61.7 lbs/hr (28.0 kg/hr).

Process Weight Rate Basis for Specific Sources: Pennsylvania has a specific limitation for iron and steel scarfing. The limitation for Pennsylvania is determined by the equation:

$A = 0.76E^{0.42}$ where A = allowable emissions, lbs/hr
E = emission index = F×W lbs/hr
F = process factor, lbs/unit
W = production or changing rate units/hr

For the typical plant discussed in Section D, the process weight is 52.7 tons/hour. Substitution into the equation will result in an allowable emission of 14.6 lbs/hr (6.6 kg/hr).

Table VII-10 presents particulate emissions and limitations from scarfing operations.

TABLE VII-10

PARTICULATE EMISSIONS AND LIMITATIONS FROM IRON AND STEEL SCARFING

Type of Operation & Control	% Control	Particulate Emissions (Based on 462,000 Tons/yr) lbs/hr	kg/hr	Limitations[7] lbs/hr / kg/hr General Process Industries Scarfing	New Sources		Existing Sources		
				FA	MA	GA	Col.	Miss.	UT 85% Cont
Iron & Steel Scarfing	0	158	71.7	14.6/6.6	22.6/10.2	45.8/20.8	41.9/19.0	61.7/28.0	23.7 /10.8
Iron & Steel Scarfing, with Settling Chamber, Electrostatic Precipitator, or High Energy Scrubber	90	16	7.2	14.6/6.6	22.6/10.2	45.8/20.8	41.9/19.0	61.7/28.0	2.4 / 1.1

Potential Source Compliance and Emission Limitations: Uncontrolled scarfing operations will be in violation of even the least restrictive regulations. Application of settling chambers, electrostatic precipitators, or high energy scrubbers is adequate to control scarfing emissions.

The Environment Reporter was used to update emissions limitations.

G. References:

Literature which provided useful information on the iron and steel scarfing operation is listed below:

(1) A Manual of Electrostatic Precipitator Technology, Part II - Application Areas, Southern Research Institute, Contract No. CPA 22-69-73, August 25, 1970.

(2) A Systems Study of the Integrated Iron and Steel Industry (Final Report), Battelle Memorial Institute, Contract No. PH 22-68-65, May 15, 1969.

(3) Particulate Pollutant System Study, Volume I - Mass Emissions, Midwest Research Institute, EPA, Contract No. CPA 22-69-104, May 1, 1971.

(4) Scheuneman, Jean J., M. D. High, W. E. Bye, R. A. Taft, Air Pollution Aspects of the Iron and Steel Industry, U. S. Department of Health, Education, and Welfare, Public Health Service Publication No. 999-AP-1, June 1963.

(5) Particulate Pollutant System Study, Volume III - Handbook of Emission Properties, Midwest Research Institute, EPA, Contract No. CPA 22-69-104, May 1, 1971.

(6) McGannon, H. E., The Making, Shaping, and Treating of Steel, United States Steel Corporation, 1964.

(7) Analysis of Final State Implementation Plans - Rules and Regulations, EPA, Contract 68-02-0248, July 1972, Mitre Corporation.

A. Source Category: VII Metalurgical Industry

B. Sub Category: Iron and Steel Plants (Sintering)

C. Source Description:

Sintering agglomerates iron bearing fines including flue dust, mill scale, and other iron-ore fines by controlled combustion to produce a burden for a blast furnace. The sintering process is a continuous operation performed on interconnected grates that form a slow moving loop. The grates are usually 8-12 feet (2.44-3.66 m) wide and 90-100 feet (27.43-30.48 m) long and contain the iron bearing fine and approximately five percent finely divided coke breeze or anthracite coal. Near the head or feed end of the grate, the bed is ignited on the surface by gas burners. As the grate moves along, air is pulled down through the mixture by downdraft combustion. As the grates move continuously over the wind boxes toward the discharge end, the combustion front in the bed moves progressively downward with sufficient heat and temperature (about 2400-2700°F [1351-1482°C]) to sinter the fine ore particles together into porous, coherent lumps. Although the sinter bed is stationary with respect to the moving grates that support it, the bed travels continuously and the combustion is essentially a standing wave from the ignition point to the bottom of the bed near the discharge end. Figure VII-12 is a schematic flow diagram of a continuous iron-ore sintering process. Modern sinter plants have capacities of 1000-6000 tons (9.0×10^5-54.0×10^5 kg) per day of finished sinter.

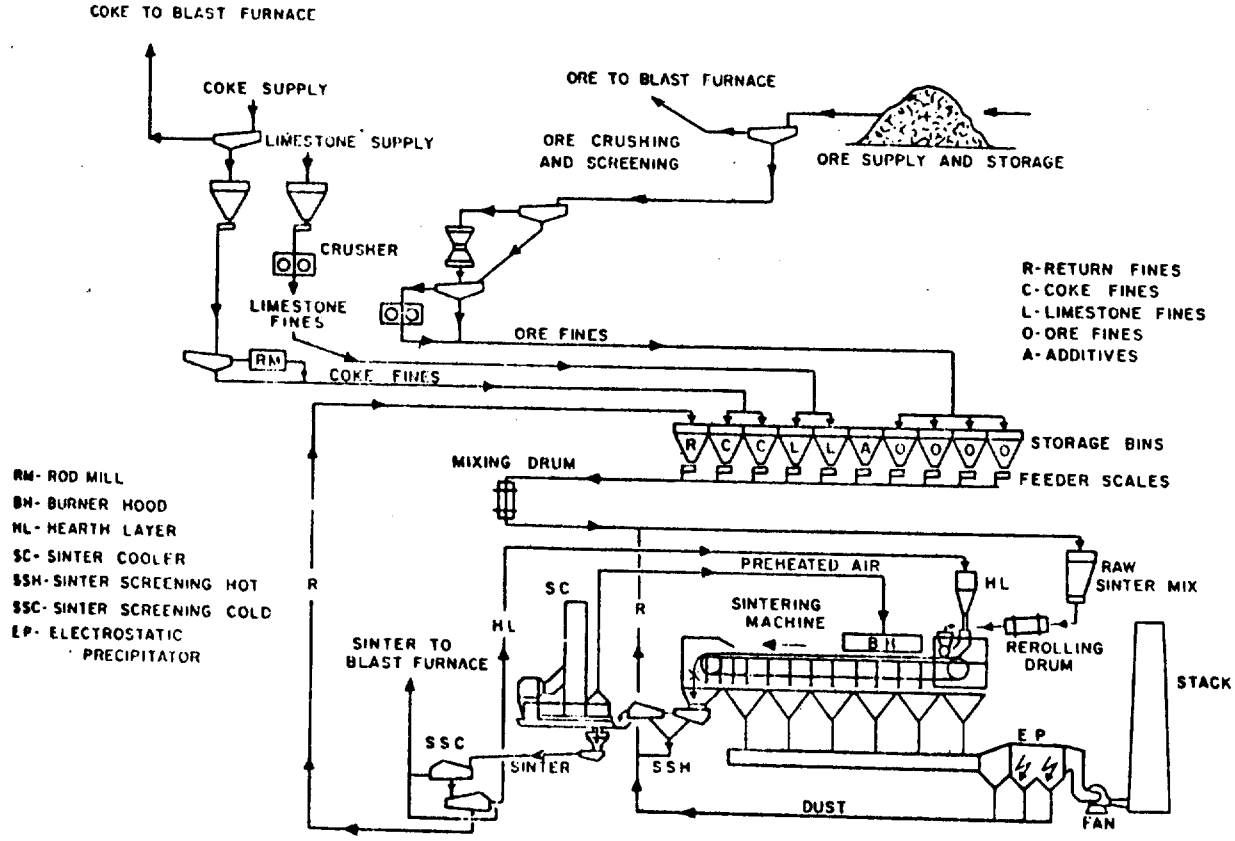

Figure VII-12: Sintering Process Flow Diagram

Once the sinter has left the traveling grate, the sinter is cooled prior to handling and sizing. Figure VII-13 is a schematic diagram of a shaft type sinter cooler where the undersized sinter is elutriated with the hot air. After passing through a dry collection device the sinter is recycled back to the beginning of the process. Normally 1.5-5.0 pounds (.68-3.4 kg) of cooling air is required for each pound of sinter cooled.

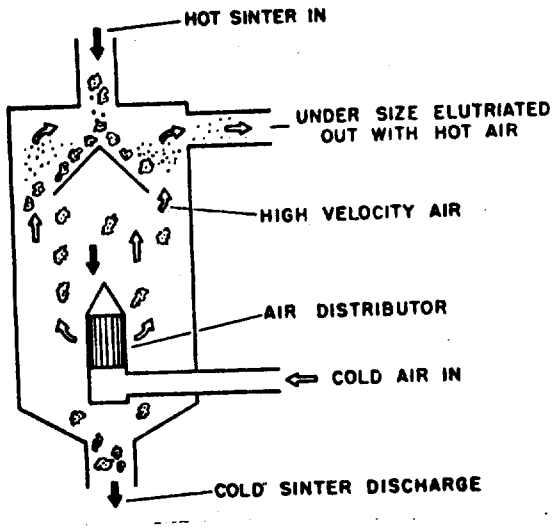

Figure VII-13: Sinter Cooler

D. Emission Rates:

Particulate emissions from the sintering process are emitted from the handling of the raw materials, the combustion of the coke mixed with the ore, and during the cooling and screening process. Since the handling of the raw materials is different at each location, no estimates are made for it. Also, handling of raw materials has many fugitive aspects and as such is not directly amenable to consistent estimation or traditional stack clean-up technology.

During the sintering operation itself, emissions arise from the combustion of the moving bed of iron ore and coke. The flue gas is collected in a multiplicity of compartments called wind boxes located along the length of the machine, from which dust-laden air is transported through ducts to dust collection equipment, consisting of a combination of mechanical-electrostatic dry type precipitator. The amount and composition of the particulate and gaseous emissions depends on several factors, including the type of ore used, the efficiency of the mixing, the distribution of the unfired sinter on the grate, and the age and maintenance of the equipment. Typical emissions values for the sintering operation and the cooling screening operation, their associated control equipment, and typical process rates are found in Table VII-11 on the following page.

Under normal conditions, the particulate emissions range from 5-100 pounds (2.25-45 kg) of particulate per ton of sinter produced, with a mean of around 20 pounds (9 kg) of particulate per ton of sinter. Gas volumes exhausted usually

TABLE VII-11

SINTERING PARTICULATE EMISSIONS

Type of Operation	% Control	Emissions			
		lbs part/ ton of sinter	kg part/ metric ton sinter	lbs/hr emission based on 1000-6000 tons/day	kg/hr emission based on $9.0\text{-}5.4 \times 10^5$ kg/day
Sintering					
Windbox uncontrolled	0.0	20.	9.9	830.0-5000	375.0-2250
Windbox with dry cyclone	90.0	2.0	1.0	83.0- 500	37.5- 225
Windbox with dry cyclone plus electrostatic precipitator	95.0	1.0	.50	42.0- 250	18.8- 113
Windbox with dry cyclone plus wet scrubber	99.8	.04	.02	1.7- 10.2	.8- 4.60
Cooling and Cleaning					
Discharge uncontrolled	0.0	22.	10.9	917.0-5500	413.0-2475
Discharge with dry cyclone	90.0	2.2	1.1	92.0- 550	41.3- 248
Discharge with dry cyclone plus electrostatic precipitator	99.5	.11	.054	4.6- 27.6	2.1- 14.2

vary between 100,000 and 450,000 cubic feet per minute (2830-12740 m^3/min) with particulate loadings of .5-6.5 grains/standard cubic foot. From 80-90 percent of the total particulate material from the sintering process are greater than 20 microns in size by mass. Because of their size, weight, and value as potential recyclable material, traditional dry methods of collection have been utilized.

E. Control Equipment:

Three methods of control have been employed in reducing emissions from the sintering operation and the screening and cooling operations. These methods have involved the use of electrostatic precipitators, dry cyclones, and wet scrubbers.

The emissions from the sintering operation involves venting the flue gases collected in the windboxes to the atmosphere. These gases contain the products of combustion and many of the inert fines from the iron ore. A mechanical cyclone is used to separate out the larger particles, then a wet scrubber or an electrostatic precipitator follows to collect the finer particles. A wet scrubber is more suitable for sintering than an electrostatic precipitator because the disposal of the wet dust is easier than the dry dust from the electrostatic precipitator. However, the dry electrostatic precipitator is easier to expand, is more amenable to a cyclic emission, and is less expensive and easier to operate than a wet system. The installation of one system over the other is a matter of preference and local energy availability.

The sinter cooling process uses a cyclone to separate the larger fines to be reagglomerated where the bulk of the process weight is sent to a screening device. The exhaust from the cyclone is connected to an electrostatic precipitator to further capture the fines and potentially recycle them.

F. New Source Performance Standards and Regulation Limitations:

New Source Performance Standards (NSPS): On March 8, 1974, EPA promulgated New Source Performance Standards for iron and steel plants. However, these standards pertain only to the basic oxygen furnace. As such, the sintering operation described in Section D is controlled by individual state regulations covering either general processes and/or specifically the sintering process.

State Regulations for New and Existing Sources: Particulate emission regulations for varying process weight rates are expressed differently from state to state. There are four types of regulations that are applicable to the sintering process. The four types of regulations are based on:

1. concentrations,
2. control efficiency,
3. gas volume, and
4. process weight.

Concentration Basis: Alaska, Delaware, Washington and New Jersey are representative of states that express particulate emission limitations in terms of grains/standard cubic foot and grains/dry standard cubic foot for general processes. The limitations for these four states are:

Alaska	-	0.05 grains/standard cubic foot
Delaware	-	0.20 grains/standard cubic foot
Washington	-	0.20 grains/dry standard cubic foot
Washington	-	0.10 grains/dry standard cubic foot (new)
New Jersey	-	0.02 grains/standard cubic foot

Four states have regulations applicable to general operations at iron and steel plants. Their limitations are expressed in terms of grains/dry standard cubic foot. The four states and their limitations are:

Colorado	-	0.022 grains/dry standard cubic foot
Idaho	-	0.022 grains/dry standard cubic foot
Kentucky	-	0.022 grains/dry standard cubic foot
Wisconsin	-	0.022 grains/dry standard cubic foot

Control Efficiency Basis: Utah requires general processes to maintain 85% control efficiency over uncontrolled emissions.

Gas Volume Basis: Texas expresses particulate emission limitations in terms of pounds/hour for specific stack flow rate expressed in actual cubic feet per minute. The Texas limitations for particulates are as follows:

1	-	10,000	acfm -	9.11	lbs/hr
10,000	-	100,000	acfm -	38.00	lbs/hr
10^5	-	10^6	acfm -	158.6	lbs/hr

Process Weight Rate Basis for New Sources: Several states have adopted process limitations for new sources with process weight rates of 42 tons/hour and 250 tons/hour. For sources with a process weight rate of 42 tons/hr, Illinois is representative of a most restrictive limitation, 18.7 lbs/hr (8.5 kg/hr) and New Hampshire is representative of a least restrictive limitation, 42.9 lbs/hr (19.5 kg/hr). For a process weight rate of 250 tons/hr, Massachusetts is representative of a most restrictive limitation, 21.5 lbs/hr (9.8 kg/hr) and New Hampshire is representative of a least restrictive limitation, 58.3 lbs/hr (26.4 kg/hr).

Process Weight Rate Basis for Existing Sources: The majority of states express general process limitations for existing sources for a wide range of process weight rates. For sources with a process weight rate of 42 tons/hour, Connecticut is representative of a most restrictive limitation, 41.9 lbs/hr (19.0 kg/hr) and New Hampshire is representative of a least restrictive limitation, 51.5 lbs/hr (23.4 kg/hr). For sources with a process weight rate of 250 tons/hour, Illinois is representative of a most restrictive limitation, 61.0 lbs/hr (27.7 kg/hr) and Mississippi is representative of a least restrictive limitation, 155.0 lbs/hr (70.3 kg/hr).

Process Weight Rate Basis for Specific Sources: Pennsylvania has a process regulation specifically for sintering. For a 42 ton/hour process the limitation is 12.8 lbs/hr (5.8 kg/hr) and for a 250 ton/hour process the limitation is 27.2 lbs/hr (12.3 kg.hr). Table VII-12 presents uncontrolled and controlled emissions and limitations for sintering.

TABLE VII-12

PARTICULATE EMISSIONS AND LIMITATIONS FOR SINTERING

Type of Operation	% Control	Emissions lbs/hr / kg/hr based on 1000 ton/day	Limitations[5] lbs/hr / kg/hr				
			Specific Source	Existing Source		New Source	
			PA	Conn.	NH	Ill.	NH
Sintering							
Windbox uncontrolled	0.0						
Windbox with dry cyclone	90.0	830/375	12.8/5.8	41.9/19.0	51.5/23.4	18.7/8.5	42.9/19.5
Windbox with dry cyclone plus electrostatic precipitator	95.0	83/37.5	12.8/5.8	41.9/19.0	51.5/23.4	18.7/8.5	42.9/19.5
Windbox with dry cyclone plus wet scrubber	99.8	42/8.8	12.8/5.8	41.9/19.0	51.5/23.4	18.7/8.5	42.9/19.5
Cooling and Cleaning		1.7/.8	12.8/5.8	41.9/19.0	51.5/23.4	18.7/8.5	42.9/19.5
Discharge uncontrolled	0.0						
Discharge with dry cyclone	90.0	9.7/4.3	12.8/5.8	41.9/19.0	51.5/23.4	18.7/8.5	42.9/19.5
Discharge with dry cyclone plus electrostatic precipitator	99.5	92/41.3	12.8/5.8	41.0/19.0	51.5/23.4	18.7/8.5	42.9/19.5
		4.6/2.1	12.8/5.8	41.9/19.0	51.5/23.4	18.7/8.5	42.9/19.5
		based on 6000 ton/day	PA	Ill.	Miss.	MA	NH
Sintering							
Windbox uncontrolled	0.0	5000/2250	27.2/12.9	61.0/27.7	155/70.3	21.5/9.8	58.3/26.4
Windbox with dry cyclone	90.0	500/225	27.2/12.9	61.0/27.7	155/70.3	21.5/9.8	58.3/26.4
Windbox with dry cyclone plus electrostatic precipitator	95.0	250/113	27.2/12.9	61.0/27.7	155/70.3	21.5/9.8	58.3/26.4
Windbox with dry cyclone plus wet scrubber	99.8	10.2/4.6	27.2/12.9	61.0/27.7	155/70.3	21.5/9.8	58.3/26.4
Cooling and Cleaning							
Discharge uncontrolled	0.0	5500/2475	27.2/12.9	61.0/27.7	155/70.3	21.5/9.8	58.3/26.4
Discharge with dry cyclone	90.0	550/248	27.2/12.9	61.0/27.7	155/70.3	21.5/9.8	58.3/26.4
Discharge with dry cyclone plus electrostatic precipitator	99.5	27.6/14.2	27.2/12.9	61.0/27.7	155/70.3	21.5/9.8	58.3/26.4

Potential Source Compliance and Emission Limitations: Current technology is adequate to control sintering and cooling operations to even the most restrictive limitation.

The Environment Reporter was used to update the emission limitations.

References

1. Compilation of Air Pollutant Emission Factors, April, 1974, USEPA.

2. "Wet vs. Dry Gas Cleaning in the Steel Industry," H. C. Henschem, J. of the Air Pollution Control Association, May, 1968.

3. The Making, Shaping, and Treating of Steel, U. S. Steel, August, 1964.

4. A Manual of Electrostatic Precipitator Technology, Part II - Application Areas, Southern Research Institute.

5. Analysis of Final State Implementation Plans - Rules and Regulations, EPA, Contract 68-02-0248, July 1972, Mitre Corporation.

References that were not used directly in the development of the information for this section but could provide qualitative background for other uses and were reviewed include:

6. Control Techniques for Particulate Air Pollutants, USEPA, January, 1969.

7. Technical Guide for Review and Evaluation of Compliance Schedules for Air Pollution Sources, EPA-340/1-73-001-a.

8. Background Information for Proposed New Source Performance Standards: Asphalt Concrete Plants, Petroleum Refineries, Storage Vessels, Secondary Lead Smelters and Refineries, Brass or Bronze Ingot Production Plants, Iron and Steel Plants, Sewage Treatment Plants, Volume 1, Main Text.

A. Source Category: VII Metallurgical Industry

B. Sub Category: Iron and Steel Plants (Open-Hearth Furnace)

C. Source Description:

The open-hearth furnace is the type of unit that produces 90 percent of the steel made in this country. The open-hearth furnace reduces the impurities present in scrap and pig iron to the limits specified for the different qualities of steel. The refining operation is carried out by means of a slag that forms a continuous layer on the surface of the liquid metal.

Open hearth-furnaces are of two types, depending on the character of the refractory material that forms the basin holding the metal. Where the material is silica sand, the furnace is described as "acid furnace," and where it is dolomite, it is termed a "basic furnace."

The open-hearth process consists of several stages:

1. tap to start,
2. charging,
3. meltdown,
4. hot-metal addition,
5. ore and lime boil,
6. working (refining),
7. tapping, and
8. delay.

During the charging period, the raw materials are dumped into the furnace, and the melting period begins. When the solid material has melted, a charge of molten pig iron is poured into the open hearth, followed by the ore and lime boil. During the work period the phosphorus and sulfur are lowered to the specified levels, carbon is eliminated, and the heat is conditioned for final deoxidation or tapping. At the end of this time the furnace is tapped, with the temperature of the melt at approximately 3000°F (1649°C). Figure VII-10 shows a cross-sectional view of an open hearth furnace.(1)18

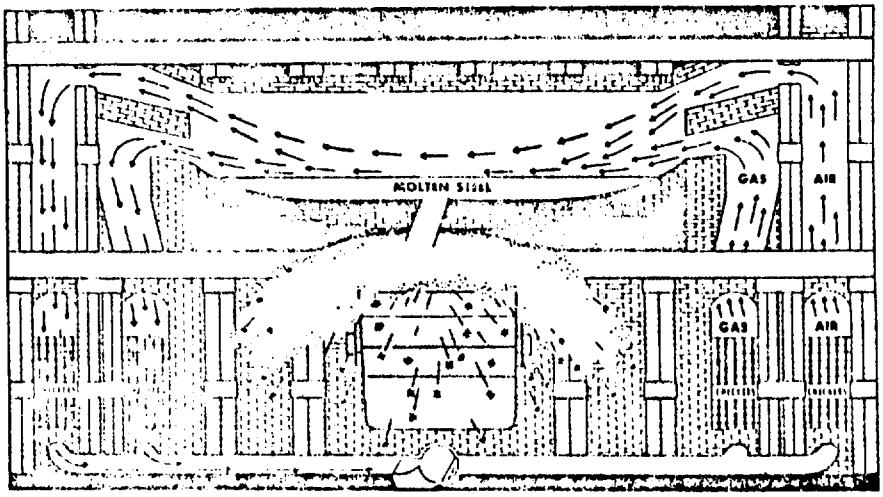

Figure VII-10: Cross-sectional View of an Open-Hearth Furnace

Open-hearth furnaces vary widely in size, the median being 100-200 tons capacity. The time required to produce a heat is between 8 and 12 hours. A typical plant will produce 140,000 tons of steel annually.(3)240

D. Emission Rates:

Air contaminants are emitted from an open-hearth furnace throughout the process or heat, which lasts from 8 to 12 hours. The particulate emissions that occur in greatest quantities are fumes or oxides of various metal constituents in the steel alloy. The quantity of particulate emitted depends on the degree of oxygen lancing that is used. Oxygen lancing reduces both the time needed for a heat and the fuel consumption. The average rate of particulate emission from open-hearth furnaces is 17 pounds per ton of material charged, as shown in Table VII-13.(2)

TABLE VII-13

PARTICULATE EMISSIONS FROM OPEN-HEARTH FURNACES

Type of Operation & Control	% Control	Particulate Emissions (Based on 140,000 Tons Steel Annually)			
		lb/ton	kg/MT	lb/hr	kg/hr
Open-Hearth Furnace, Uncontrolled	0	17	8.5	270	123
Open-Hearth Furnace, with Venturi Scrubber	98-99	.34-.17	.17-.085	2.7-1.4	1.2
Open-Hearth Furnace, with Electrostatic Precipitator	98.5	.26	.13	4.1	1.8
Open-Hearth Furnace, with Baghouse	99.9	.017	.0085	.3	.12

E. Control Equipment:

The iron oxide fumes from open-hearth furnaces are hard to collect economically because of their small particle size, the large volume and high temperature of the gas emitted, and the low value of the recovered material. However, three types of collectors are successful in removing iron oxide dust and fume. These are:

1. electrostatic precipitators,
2. high efficiency wet scrubbers, and
3. fabric filters.

Electrostatic precipitators have been reported 98.5 percent efficient, while maximum removal efficiencies for venturi scrubbers are in the range of 98-99 percent.(1)53 A fabric filter has been shown to be 99.9 percent effective in particulate removal.(1)53 The application of control on open-hearth furnaces is only 41 percent.(2)221 Table VII-13 shows the controlled and uncontrolled particulate emissions from open-hearth furnaces.

F. New Source Performance Standards and Regulation Limitations:

New Source Performance Standards (NSPS): On March 8, 1974, EPA promulgated "New Source Performance Standards" for iron and steel plants. However, these standards pertain only to the basic oxygen furnace. As such, the open-hearth operations described in Section D are controlled by individual state regulations covering either general processes and/or specifically the open-hearth operations.

State Regulations for New and Existing Sources: Particulate emission regulations for varying process weight rates are expressed differently from state to state. There are four types of regulations that are applicable to the open-hearth process. The four types of regulations are based on:

1. concentrations,
2. control efficiency,
3. gas volume, and
4. process weight.

Concentration Basis: Alaska, Delaware, Washington and New Jersey are representative of states that express particulate emission limitations in terms of grains/standard cubic foot and grains/dry standard cubic foot for general processes. The limitations for these four states are:

Alaska	-	0.05 grains/standard cubic foot
Delaware	-	0.20 grains/standard cubic foot
Washington	-	0.20 grains/dry standard cubic foot
Washington	-	0.10 grains/dry standard cubic foot (new)
New Jersey	-	0.02 grains/standard cubic foot

Four states have regulations applicable to general operations at iron and steel plants. Their limitations are expressed in terms of grains/dry standard cubic foot. The four states and their limitations are:

Colorado	-	0.022 grains/dry standard cubic foot
Idaho	-	0.022 grains/dry standard cubic foot
Kentucky	-	0.022 grains/dry standard cubic foot
Wisconsin	-	0.022 grains/dry standard cubic foot

Gas Volume Basis: Texas expresses particulate emission limitations in terms of pounds/hour for specific stack flow rates expressed in actual cubic feet per minute. The Texas limitations for particulates are as follows:

1	-	10,00 acfm	- 9.11 lbs/hr
10,000	-	100,000 acfm	- 38.00 lbs/hr
10^5	-	10^6 acfm	- 158.6 lbs/hr

Process Weight Rate Basis for New Sources: Several states have adopted particulate emission limitations for new sources that have a process weight rate of 15.9 tons/hr. For sources of this size, Illinois is representative of a most restrictive limitation, 11.1 lbs/hr (5.0 kg/hr) and New Hampshire is representative of a least restrictive limitation, 25.3 lbs/hr (11.5 kg/hr).

Process Weight Rate Basis for Existing Sources: The majority of states express general process limitations for existing sources in terms of lbs/hr for a wide range of process weight rates. For sources with a process weight rate of 15.9 tons/hr, Massachusetts is representative of a most restrictive limitation, 17.3 lbs/hr (7.8 kg/hr) and New Hampshire is representative of a least restrictive limitation, 32.2 lbs/hr (14.6 kg/hr).

Process Weight Rate Basis for Specific Sources: Pennsylvania has a regulation specifically limiting the emissions from steel production. Pennsylvania's limitation is determined by the equation:

$A = 0.76E^{0.42}$, where A = Allowable emissions, lbs/hr
E = Emission index = F×W lbs/hr
F = Process factor, lbs/unit
W = Production or charging rate units/hour

Table 1 of the Pennsylvania regulations specifcies F for steel production as 40 lbs/ton of product. For a process weight rate of 15.9 tons/hour, the maximum allowable emission is 11.4 lbs/hr (5.2 kg/hr). Table VII-14 presents controlled and uncontrolled emissions and limitations for open hearth operations.

TABLE VII-14

PARTICULATE EMISSIONS AND LIMITATIONS FROM OPEN-HEARTH OPERATIONS

Type of Operation & Control	% Control	Emissions (Based on 140,000 tons/yr) lb/hr	kg/hr	Limitations[4] lb/hr / kg/hr Iron & Steel	General Process Industries				
					New Sources		Existing Sources		
				PA	Ill.	NH	MA	NH	UT 85% Control
Open-Hearth Furnace, Uncontrolled	0	270	123	11.4/5.2	11.1/5.0	25.3/11.5	17.3/7.8	32.2/14.6	40.5/18.5
Open-Hearth Furnace, with Venturi Scrubber	98-99	2.7-1.4	1.2	11.4/5.2	11.1/5.0	25.3/11.5	17.3/7.8	32.2/14.6	40.5/18.5
Open-Hearth Furnace, with Electrostatic Precipitator	98.5	4.1	1.8	11.4/5.2	11.1/5.0	25.3/11.5	17.3/7.8	32.2/14.6	40.5/18.5
Open-Hearth Furnace, with Baghouse	99.9	.3	.12	11.4/5.2	11.1/5.0	25.3/11.5	17.3/7.8	32.2/14.6	40.5/18.5

Potential Source Compliance and Emission Limitations: For the size process described in Section D, a control device capable of 96% control will satisfy Pennsylvania's restrictions.

The Environment Reporter was used to update the emission limitations.

G. References:

The following literature was used to develop the information on Open-Hearth Furnaces:

(1) Scheuneman, Jean J., M. D. High, W. E. Bye, R. A. Taft, Air Pollution Aspects of the Iron and Steel Industry, U. S. Department of Health, Education, and Welfare, Public Health Service Publication No. 999-AP-1, June 1963.

(2) Particulate Pollutant System Study, Volume I - Mass Emissions, Midwest Research Institute, EPA, Contract No. CPA 22-69-104, May 1, 1971.

(3) Danielson, J. A., Air Pollution Engineering Manual, Second Edition, AP-40, Research Triangle Park, North Carolina, EPA, May 1973.

(4) Analysis of Final State Implementation Plans - Rules and Regulations, EPA, Contract No. 68-02-0248, July 1972, Mitre Corporation.

One source which could provide additional information on open-hearth furnaces in the iron and steel industry is:

(5) McGannon, H. C., The Making, Shaping, and Treating of Steel, U.S. Steel, 1964.

A. Source Category: VII Metallurgical Industry

B. Sub Category: Primary Copper

C. Source Description:

Copper mined in the U.S. is from deposits of:

Gornite	- Cu_5FeS_4
Chalcopyrite	- $CuFeS_2$
Enargite	- $Cu_3(As, Sb)S_4$

These minerals are of igneous origin and are distributed in massive rock strata as "porphyry" deposits. These deposits are low in copper content -- around 1% Cu by weight. The complex chemistry of the ore materials, the low concentration in the rock, and the strong affinity of copper for sulfur contribute to the complex series of operations necessary to produce metallic copper from ore.

Copper usually occurs in deposits with other metals such as iron, lead, arsenic, tin or mercury. Copper ore is processed by a series of operations consisting of mining, concentrating, smelting and refining. These steps are subdivided as follows:

1. mining (drilling, blasting, loading, handling),
2. concentrating (crushing, grinding, classification, flotation, dewatering),
3. smelting (roasting, reverberatory smelting, converting),
4. refining (fire refining, electrolytic refining).

Mining: Most U.S. copper comes from large open-pit mines where the porphyry deposits are scraped clear of over burden, and blasting operations loosen the ore. Electric shovels, with bucket capacities of 15 cubic yards, load trucks which haul the ore to mills that concentrate it to 15% to 30% by weight.

Concentration: Sulfide ores are separated from noncopper-bearing rock by froth flotation. The porphyry is ground to a powder and slurried. Chemical agents called "frothers" are added to the slurry while air is introduced. The "frothers" cause the air bubbles to rise to the surface with the sulfide ore attached. The froth is cleared off the surface of the water while the tailings sink to the bottom. The copper sulfide ore is then washed and dewatered, upgrading the ore to 15% to 30% by weight of copper. (1)271,272

Smelting: Copper is obtained from copper ores by smelting which includes the successive operations of:

1. roasting,
2. reverberatory smelting,
3. converting, and
4. fire refining.

The steps in the smelting process achieve two types of separations:

1. between the metals and the gangue,
2. between copper and the chemically combined contaminants, sulfur and iron.

Copper ores are smelted either as they come from the mine or after grinding and flotation. Smelting transforms the low-percentage ores into high percentage copper/sulfur concentrate. The high percentage copper/sulfur concentrate could be smelted directly or after partial roasting. Roasting removes part of the sulfur, giving a favorable balance of copper, iron and sulfur for reverberatory feed. In the reverberatory furnace, iron present as oxide combines with siliceous flux to form a slag, leaving a material known as matte, containing copper, iron, and sulfur combined with copper. Figures VII-14 and VII-15 [1]274,278 present schematics of the copper smelting process and a typical reverberatory furnace, respectively.

The matte is reduced to copper in the converter in two stages of blowing air. The first stage eliminates sulfur and forms iron oxide which is slagged off by the addition of siliceous flux. The copper sulfide remaining in the converter is reduced to metal, and the sulfur is eliminated as SO_2 in the "finish" blowing stage. This crude copper undergoes further refinement by fire refining and is cast into anodes for electrolytic refining.

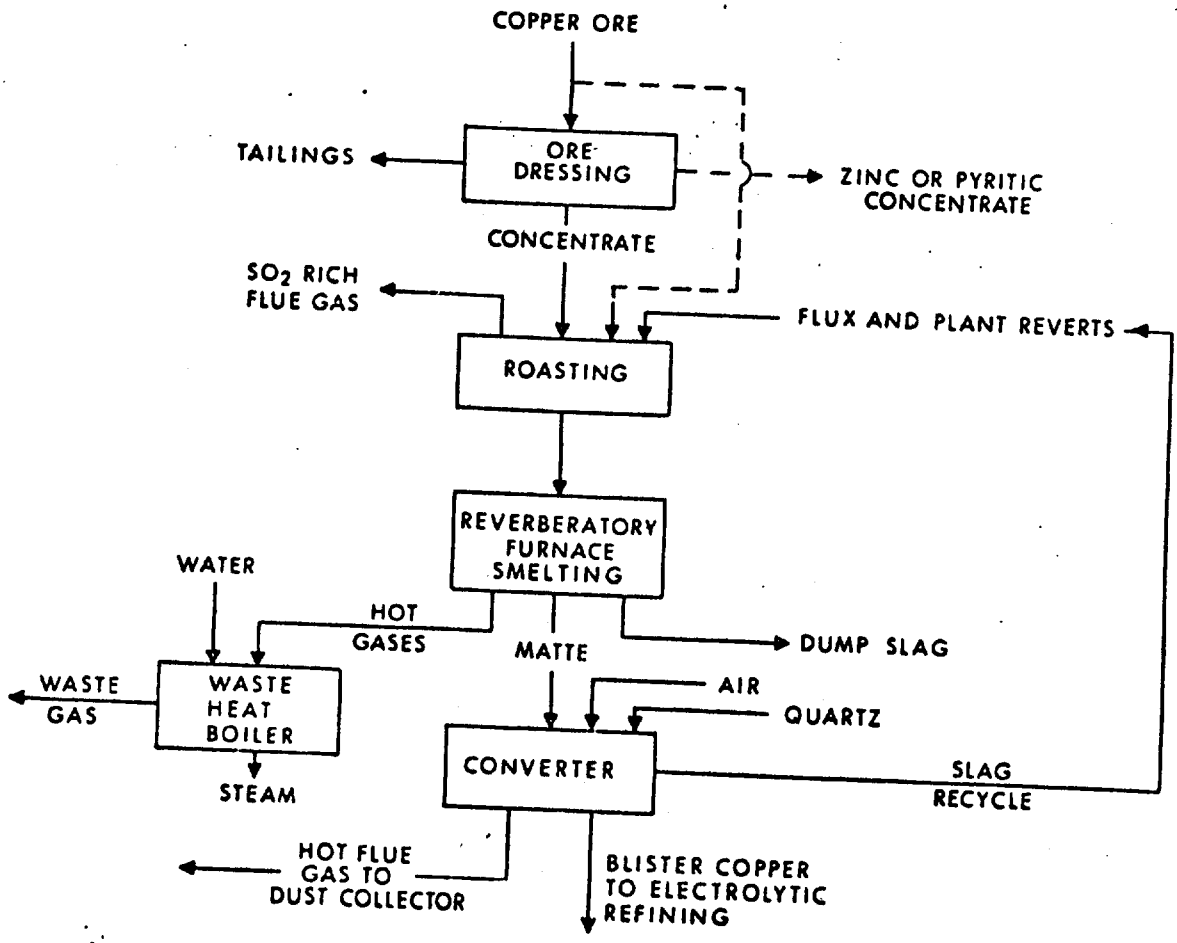

Figure VII-14: Copper Smelting

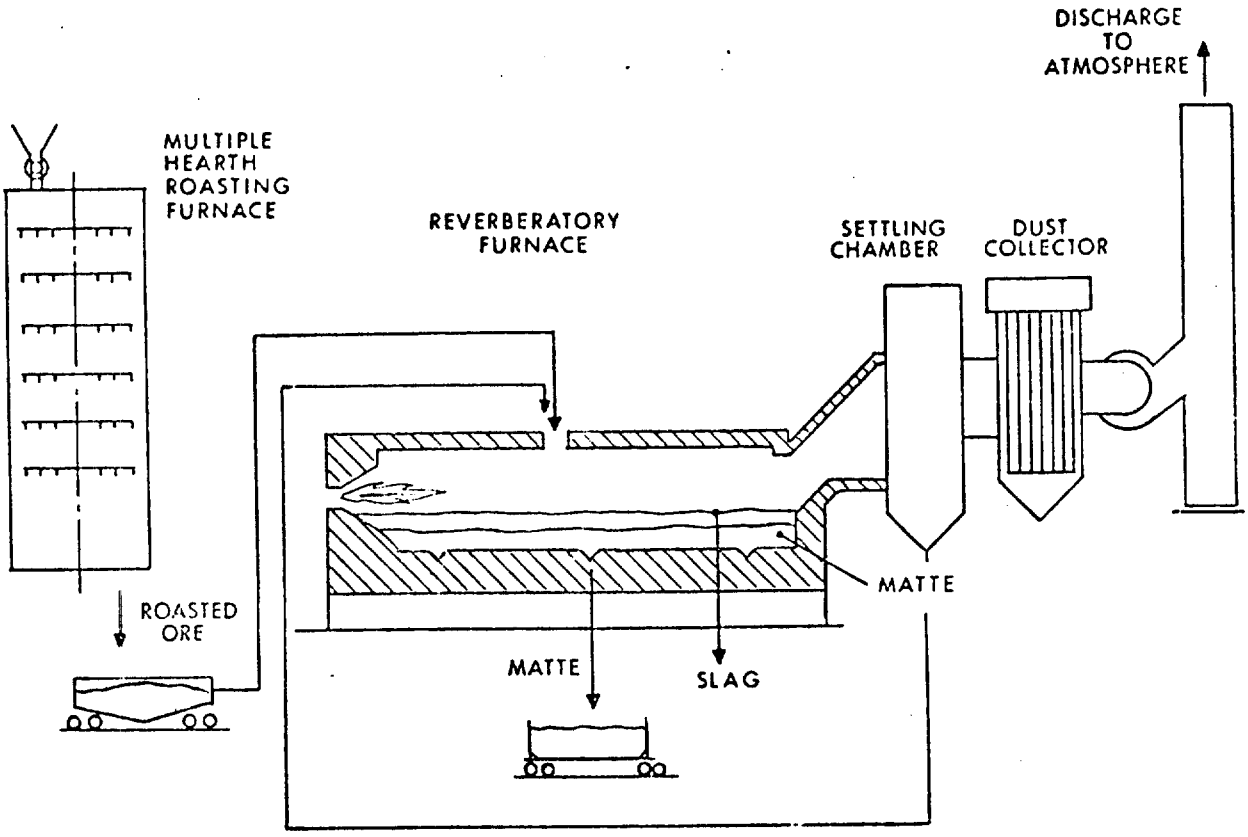

Figure VII-15: Reverberatory Furnace

Refining: Molten matte produced in the reverberatory furnace is transferred in ladles to the converters where air is blown into the liquid through "tuyeres." The oxidation reactions supply enough heat to maintain a temperature of 2250°F with no auxiliary fuel. The sulfur dioxide is carried out with the other flue gases. Silica flux is added to combine with iron oxide to form a fluid iron silicate slag. The slag is skimmed from the converter and returned to the reverberatory furnace. Additional matte is added to the converter and the process repeated until a suitable charge of copper sulfide has been accumulated. Blowing is continued without further matte additions until remaining sulfur has been eliminated. The resulting blister copper is 99% pure. (2)257-260

D. Emission Rates:

The high temperatures attained in roasting, smelting, and converting cause volatilization of a number of the trace elements present in copper ores and concentrates. The raw waste gases from these processes contain not only these fumes but also dust and sulfur dioxide.

The dust content of the waste gases from roasting operations depends on the characteristics of the copper concentrates as well as on the volume of air aspirated by the roasting furnace. Another factor of importance in hearth furnaces is the extent to which the concentrates remain continuously in suspension when descending from the upper to the lower hearths. The size and number of apertures in the hearths has an influence on the creation of dust in the furnace, and consequently also on the dust content of the waste gases. (2)259

The reverberatory furnace melts the metal-beaming charge and forms the matte and slag. The charge is introduced through openings in the side wall or in the roof. The heavier particles settle below the waste heat boilers and into the hoppers of the balloon flues or settling chambers. The dust is then removed to locations where it can be worked back into the system. The amount of dust will depend upon variables such as the fineness of the charge, the degree of agitation in charging and working, and specific gravity.(2)259-260

The dust content of the gases from the converter depends to a large extent on the chemical composition of the copper matte. An increase in the operating temperature of the converter causes higher volatilization of the metals and consequently higher dust content in the raw gas.(2)260

Emission factors for total particulates from copper smelters are presented in Table VII-17.

TABLE VII-17

PARTICULATE EMISSIONS FROM PRIMARY COPPER PRODUCTION

Type of Operation* and Control	% Control	Emissions		Emission Rate (based on 50 tons/hour)	
		lbs/ton	kg/ton	lbs/hr	kg/hr
Roasting, Uncontrolled	0	45.	22.5	2250.	1021.
Roasting, Dust Chambers	30-60	31.5-18.	15.8-9	1575.-900.	714.-408.
Roasting, Cyclone	85-95	6.8-2.3	34-1.2	340.-115.	154.-52.
Roasting, Electrostatic Precipitators	99.7	.14	.07	7.0	3.2
Roasting, Cloth Filters	99.9	.05	.03	2.5	1.1
Smelting, Reverberatory, Uncontrolled	0	20.	10.	1000.	454.
Smelting, Reverberatory, Dust Chambers	30-60	14.-8.	7.-4.	700.-400.	318.-181.
Smelting, Reverberatory, Cyclones	85-95	3.-1.	1.5-.5	150.-50.	68.-23.
Smelting, Reverberatory, Electrostatic Precipitators	99.7	.06	.03	3.	1.4
Smelting, Reverberatory, Cloth Filter	99.9	.02	.01	1.	.5
Converting, Uncontrolled	0	60.	30.	3000.	1361.
Converting, Dust Chambers	30-60	42.-24.	21.-12.	2100.-1200.	953.-544.
Converting, Cyclones	85-95	9.-3.	4.5-1.5	450.-150.	204.-68.
Converting, Electrostatic Precipitators	99.7	.2	.1	10.	4.5
Converting, Cloth Filters	99.9	.06	.03	3.	1.4
Refining, Uncontrolled	0	10.	5.	500.	227.
Refining, Dust Chamber	30-60	7.-4.	3.5	350.-200.	159.-91
Refining, Cyclone	85-95	1.5-.5	.8-.3	75.-25.	34.-11.3
Refining, Electrostatic Precipitators	99.7	.03	.015	1.5	.7
Refining, Cloth Filter	99.9	.01	.05	.5	.2

* Approximately 4 unit weights of concentrate are required to produce 1 unit weight of copper metal. Emission factors expressed as units per unit weight of concentrated ore produced.

E. Control Equipment:

Cloth filters are utilized for secondary dust collection from converter gases. Depending on the purpose of utilization, the following types of fabrics are employed:

1. cloth woven from natural fibers (wood, cotton),
2. cloth woven from synthetic fibers (redon, pan, etc.)

The dust content of the exhausted air is strongly influenced by the air-to-cloth ratio (ft^3 of raw gas per ft^2 of filter surface) as well as by the structure and density of the filter weave. In order to maintain the full nominal rating of the filter in continuous operation, cleaning of the filter cloth is of greatest importance. With filters properly maintained, efficiencies up to 99.9% can be attained.

Centrifugal separators installed on furnaces generally have maximum efficiencies of 80%-85% and are therefore usually employed for primary removal of coarse dust.

Electrostatic precipitators, usually preceded by mechanical collectors are applied to control particulates from copper smelting. The equipment is normally more massive and rugged than counterparts in the power or other industries, and dust handling techniques are far more positive. Mild steel construction is accommodated by maintaining sufficient gas temperatures to preclude corrosion, with temperatures ranging from 300° to 650° on converters, and from 600° to 900°F on roasters. Actual collection efficiency usually is in the 98.5% to 99.5% range.(2)271

F. New Source Performance Standards and Regulation Limitations:

New Source Performance Standards (NSPS): New source performance standards have been promulgated by EPA January 15, 1976 for copper smelters. The promulgated standards for new and modified primary copper smelters limit emissions of particulate matter in gases discharged from dryers to 50 mg/dscm (0.022 grains/dry standard cubic foot). In addition, the opacity of these gases is limited to 20 percent.

State Regulations for New and Existing Sources: Particulate emission regulations for varying process weight rates are expressed differently from state to state. The four types of regulations are based on:

1. concentration
2. control efficiency
3. gas volume, and
4. process weight.

Concentration Basis: Alaska, Delaware, Pennsylvania, Washington and New Jersey are representative of states that express particulate emission limitations in terms of grains/standard cubic foot and grains/dry standard cubic foot for general processes. The limitations for these five states are:

Alaska	-	0.05 grains/standard cubic foot
Delaware	-	0.20 grains/standard cubic foot
Washington	-	0.20 grains/dry standard cubic foot
Washington	-	0.10 grains/dry standard cubic foot (new)
New Jersey	-	0.02 grains/dry standard cubic foot
Pennsylvania	-	0.02 grains/standard cubic foot, gas volume >300,000 scfm
Pennsylvania	-	0.04 grains/standard cubic foot, gas volume <300,000 scfm

Control Efficiency Basis: Utah requires general process industries to maintain 85% control efficiency over the uncontrolled emissions.

Gas Volume Basis: Texas expresses particulate emission limitations in terms of pounds/hour for specific stack flow rates expressed in actual cubic feet per minute. The Texas limitations for particulates are as follows:

1	-	10,000 acfm	-	9.11 lbs/hr
10,000	-	100,000 acfm	-	38.00 lbs/hr
10^5	-	10^6 acfm	-	158.6 lbs/hr

Process Weight Rate Basis for New Sources: Several states have adopted process limitations for new sources with a prcoess weight rate of 50 tons/hr. For new sources with this process weight rate, Massachusetts is representative of a most restrictive limitation, 22.8 lbs/hr (10.3 kg/hr) and New Hampshire is representative of a least restrictive limitation,44.4 lbs/hr (20.1 kg/hr).

Process Weight Rate Basis for Existing Sources: The majority of states express general process limitations for existing sources in terms of lbs/hr for a wide range of process weight rates. For a process weight rate of 50 tons/hour, Colorado is representative of a most restrictive limitation, 32.3 lbs/hr (14.7 kg/hr) and Georgia is representative of a least restrictive limitation, 44.6 lbs/hr (20.2 kg/hr).

Table VII-18 presents controlled and uncontrolled emissions and limitations from primary copper manufacure.

TABLE VII-18

PARTICULATE EMISSIONS AND LIMITATIONS FROM PRIMARY COPPER PRODUCTION

Type of Operation* and Control	% Control	Emissions (based on 50 tons/hr) lbs/hr	Emissions (based on 50 tons/hr) kg/hr	Limitations lbs/hr / kg/hr New MA	New NH	Existing CO	Existing GA	Existing UT 85%
Roasting, Uncontrolled	0	2250.	1021.	22.8/10.3	44.4/20.1	32.3/14.7	44.6/20.2	338/153
Roasting, Dust Chambers	30-60	1575.-900.	714.-408.	22.8/10.3	44.4/20.1	32.3/14.7	44.6/20.2	
Roasting, Cyclones	85-95	340.-115.	154.-52.	22.8/10.3	44.4/20.1	32.3/14.7	44.6/20.2	
Roasting, Electrostatic Precipitator	99.7	7.	3.2	22.8/10.3	44.4/20.1	32.3/14.7	44.6/20.2	
Roasting, Cloth Filters	99.9	2.5	1.1	22.8/10.3	44.4/20.1	32.3/14.7	44.6/20.2	
Smelting, Reverberatory, Uncontrolled	0	1000.	454.	22.8/10.3	44.4/20.1	32.3/14.7	44.6/20.2	
Smelting, Reverberatory, Dust Chamber	30-60	700.-400.	318.-181.	22.8/10.3	44.4/20.1	32.3/14.7	44.6/20.2	150/68
Smelting, Reverberatory, Cyclones	85-95	150.-50.	68.-23.	22.8/10.3	44.4/20.1	32.3/14.7	44.6/20.2	
Smelting, Reverberatory, Electrostatic Precipitator	99.7	3.	1.4	22.8/10.3	44.4/20.1	32.3/14.7	44.6/20.2	
Smelting, Reverberatory, Cloth Filter	99.9	1.	.5	22.8/10.3	44.4/20.1	32.3/14.7	44.6/20.2	
Converting, Uncontrolled	0	3000.	1361.	22.8/10.3	44.4/20.1	32.3/14.7	44.6/20.2	
Converting, Dust Chambers	30-60	2100.-1200.	953.-544.	22.8/10.3	44.4/20.1	32.3/14.7	44.6/20.2	450/204
Converting, Cyclones	85-95	450.-150.	204.-68.	22.8/10.3	44.4/20.1	32.3/14.7	44.6/20.2	
Converting, Electrostatic Precipitator	99.7	10.	4.5	22.8/10.3	44.4/20.1	32.3/14.7	44.6/20.2	
Converting, Cloth Filters	99.9	3.	1.4	22.8/10.3	44.4/20.1	32.3/14.7	44.6/20.2	
Refining, Uncontrolled	0	500.	227.	22.8/10.3	44.4/20.1	32.3/14.7	44.6/20.2	
Refining, Dust Chambers	30-60	350.-200.	159.-91.	22.8/10.3	44.4/20.1	32.3/14.7	44.6/20.2	75/34
Refining, Cyclones	85-95	75.-25.	34.-11.3	22.8/10.3	44.4/20.1	32.3/14.7	44.6/20.2	
Refining, Electrostatic Precipitator	99.7	1.5	.7	22.8/10.3	44.4/20.1	32.3/14.7	44.6/20.2	
Refining, Cloth Filters	99.9	.5	.2	22.8/10.3	44.4/20.1	32.3/14.7	44.6/20.2	

* Approximately 4 unit weights of concentrate are required to produce 1 unit weight of copper metal. Emission factors expressed as units per unit weight of concentrated ore produced.

Existing control technology is adequate to allow a 50 ton/hour plant to meet the most restrictive limitation.

The Environmental Reporter was used to update the emission limitations.

G. References:

1. Air Pollution Technology and Costs in Nine Selected Areas, Industrial Gas Cleaning Institute, Inc. EPA Contract 68-02-0301, September 30, 1972.

2. Particulate Pollutant System Study, Volume III - Handbook of Emission Properties, Midwest Research Institute, EPA, Contract No. CPA 22-69-104, May 1, 1971.

3. Compilation of Air Pollution Emission Factors (Second Edition), EPA, Publication No. AP-42, March 1975.

References reviewed but not used include:

4. Background Information - Proposed New Source Performance Standards for Primary Copper, Zinc, and Lead Smelters (Preliminary Draft), Sections 1 through 5, Environmental Protection Agency, Office of Air and Water Programs, August 1973.

5. Background Information - Proposed New Source Performance Standards for Primary Copper, Zinc, and Lead Smelters (Preliminary Draft), Sections 6 through 8, EPA, Office of Air and Water Programs, August 1973.

A. Source Category: VII Metallurgical Industry

B. Sub Category: Steel Foundries (Secondary)

C. Source Description:

Steel foundries differ from the basic iron and steel plants in that their primary raw material is scrap steel. Steel foundries produce steel castings as a finished product by melting the scrap and pouring it into molds. The castings are made for heavy industrial end uses such as bulldozer frames and locomotive wheels.

The steel melting operation is accomplished in one of five types of furnaces:

1. direct electric arc
2. electric induction
3. open hearth
4. crucible
4. pneumatic converter (The crucible and pneumatic converter are being phased out)

The basic melting process operations are:

1. furnace charging
2. melting
3. tapping the furnace into a ladle
4. pouring the steel into molds

An integral part of the steel foundry operation is the preparation of casting molds, and the shakeout and cleaning of these castings. Some common materials used in molds and cores for hollow casting include sand, oil, clay, and resin. Shakeout is the operation by which the cool casting is separated from the mold. The castings are cleaned by shotblasting, and surface defects such as fins are removed by burning and grinding. A schematic of steel foundry processes is shown in Figure VII-9.

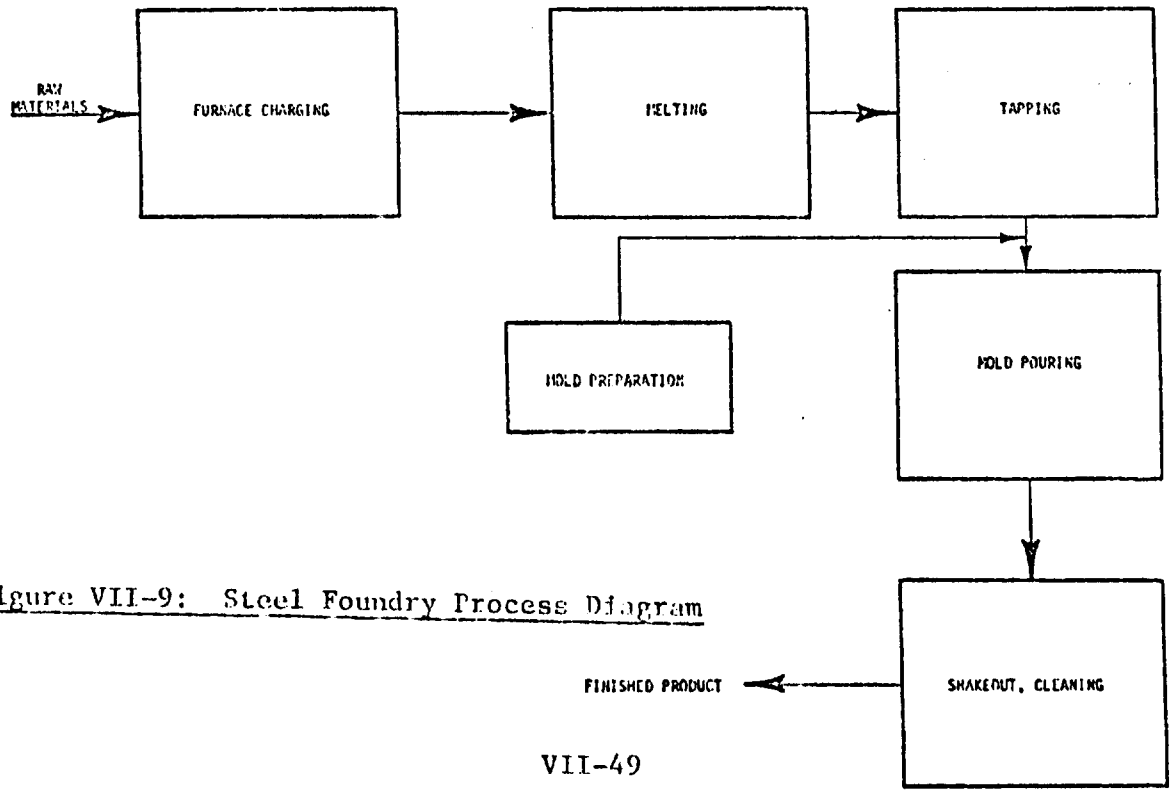

Figure VII-9: Steel Foundry Process Diagram

There are about 400 steel foundries operating in the U.S., with the average plant producing 133 tons of castings per day or 48,000 tons per year.(1)IV-6

D. Emission Rates:

Particulate emissions from the steel foundry include:

1. iron oxide
2. sand fines
3. graphite metallic dust

Factors affecting emissions from the melting process include the quality and cleanliness of the scrap and the amount of oxygen lancing. Emissions from the shakeout and cleaning operations vary according to type and efficiency of dust collection. Particulate emissions from steel foundries are summarized in Table VII-19.(2)7.13-2

TABLE VII-19

PARTICULATE EMISSIONS FROM STEEL FOUNDRIES

Type of Operation and Controls	% Control	Particulate Emissions (based on 48,000 tons/yr)			
		lbs/ton	kg/mt	lbs/hr	kg/hr
Electric arc melting, uncontrolled	0	13	6.5	71.8	32.6
Electric arc melting, with electrostatic precipitator	92-98	1.04-0.26	0.52-0.13	5.74-1.43	2.60-0.65
Electric arc melting, with baghouse	98-99	0.26-0.13	0.13-0.07	1.43-0.72	0.65-0.33
Electric arc melting, with venturi scrubber	94-98	0.78-0.26	0.39-0.13	3.86-1.43	1.75-0.65
Open hearth melting, uncontrolled	0	11	5.5	60.7	27.5
Open hearth melting, with electrostatic precipitator	95-98.5	0.55-0.17	0.28-0.083	3.04-0.94	1.38-0.43
Open hearth melting, with baghouse	99.9	0.011	0.0055	0.061	0.028
Open hearth melting, with venturi scrubber	96-99	0.44-.11	0.22-.055	2.42-0.61	1.10-0.28
Open hearth, oxygen lanced melting, uncontrolled	0	10	5	55.2	25.0
Open hearth, oxygen lanced melting, with electrostatic precipitator	95-98	0.5-0.2	0.25-0.1	2.76-1.10	1.25-0.50
Open hearth, oxygen lanced melting, with baghouse	99	0.10	0.05	.55	0.25
Open hearth, oxygen lanced melting, with venturi scrubber	95-98	0.5-0.2	0.25-0.1	2.76-1.10	1.25-0.50
Electric induction, uncontrolled	0	0.1	0.05	0.55	0.25

E. Control Equipment:

Furnace emissions from steel foundries are controlled by use of one or more collection devices such as the electrostatic precipitator, baghouse (fabric filter), and venturi scrubber. The collection efficiencies of these devices range from 92% to 99.9%, as shown in Table VII-19. Emissions from electric induction furnaces are not usually controlled.(2)7.13-2

F. New Source Performance Standards and Regulation Limitations:

New Source Performance Standards (NSPS): On March 8, 1974, EPA promulgated "New Source Performance Standards" for iron and steel plants. However, these standards pertain only to the basic oxygen furnace. As such, the secondary steel foundries described in Section D are controlled by individual state regulations covering either general processes and/or specifically secondary steel foundries.

State Regulations for New and Existing Sources: Particulate emission regulations for varying process weight rates are expressed differently from state to state. There are four types of regulations that are applicable to the secondary steel foundries. The four types of regulations are based on:

1. concentrations,
2. control efficiency,
3. gas volume, and
4. process weight.

Concentration Basis: Alaska, Delaware, Pennsylvania, Washington and New Jersey are representative of states that express particulate emission limitations in terms of grains/standard cubic foot and grains/dry standard cubic foot for general processes. The limitations for these five states are:

Alaska	-	0.05 grains/standard cubic foot
Delaware	-	0.20 grains/standard cubic foot
Pennsylvania	-	0.04 grains/dry standard cubic foot, when gas volume is less than 150,000 dscfm
Pennsylvania	-	.02 grains/dry standard cubic foot, when gas volumes exceed 300,000 dscfm
Washington	-	0.20 grains/dry standard cubic foot
Washington	-	0.10 grains/dry standard cubic foot (new)
New Jersey	-	0.02 grains/standard cubic foot

Three states have general regulations for electric arc furnaces. Iowa, Mississippi and Wisconsin express their limitations in terms of a concentration. These limitations are as follows:

Iowa	-	0.1 grains/standard cubic foot
Wisconsin	-	0.11 lbs/1000 lbs of gas
Mississippi	-	0.10 lbs/1000 lbs of gas

Control Efficiency Basis: Utah requires general process industries to maintain 85% control efficiency over the uncontrolled emissions.

Gas Volume Basis: Texas express particulate emission limitations in terms of pounds/hour for specific stack flow rates expressed in actual cubic feet per minute. The Texas limitation for particulates are as follows:

1	-	10,000	acfm	-	9.11 lbs/hr
10,000	-	100,000	acfm	-	39.00 lbs/hr
10^5	-	10^6	acfm	-	158.6 lbs/hr

Process Weight Rate Basis for New Sources: Several states have adopted process limitations for new sources with process weight rates of 5.5 tons/hour. For processes of this size, Illinois is representative of a most restrictive limitation, 7.4 lbs/hr (3.4 kg/hr) and Wyoming is representative of a least restrictive limitation, 12.9 lbs/hr (5.9 kg/hr).

Process Weight Rate Basis for Existing Sources: The majority of states express general process limitations for existing sources for a wide range of process weight rates. For sources with a process weight rate of 5.5 tons/hr, Connecticut is representative of a most restrictive limitation, 10.4 lbs/hr (4.7 kg/hr) and Mississippi is representative of a least restrictive limitation, 12.9 lbs/hr (5.9 kg/hr).

Process Weight Rate Basis for Specific Sources: Several states have adopted regulations concerning jobbing foundries. Some of these regulations cover only cupola emissions and others specify foundry operations in general. Georgia, New York, North Carolina and Oklahoma have similar regulations and all use the same process weight rate curve. For a foundry with a 5.5 ton/hr process weight rate, the particulate limitation is 17.8 lbs/hr (8.1 kg/hr). New Hampshire limits new foundries with a 5.5 ton/hr process weight rate to 12.9 lbs/hr (5.9 kg/hr) and existing foundries to 15.9 lbs/hr (7.21 kg/hr). Table VII-20 presents controlled and uncontrolled emissions and limitations from steel foundries.

TABLE VII-20

PARTICULATE EMISSIONS AND LIMITATIONS FROM STEEL FOUNDRIES

Type of Operation & Controls	% Control	Particulate Emissions (based on 48,000 tons/yr) lbs/hr	kg/hr	Limitations [3] lbs/hr/kg/hr General Process Industries New Sources Ill.	Wy.	Existing Sources Conn.	Miss.	UI 85% Control
Electric arc melting, uncontrolled	0	71.8	32.6	7.4/3.4	12.9/5.9	10.4/4.7	12.9/5.9	10.8 /4.9
Electric arc melting, with electrostatic precipitator	92-98	5.74-1.43	2.60-0	7.4/3.4	12.9/5.9	10.4/4.7	12.9/5.9	10.8 /4.9
Electric arc melting, with baghouse	98-99	1.43-0.72	0.65-0	7.4/3.4	12.9/5.9	10.4/4.7	12.9/5.9	10.8 /4.9
Electric arc melting, with venturi scrubber	94-98	3.86-1.43	1.75-0	7.4/3.4	12.9/5.9	10.4/4.7	12.9/5.9	10.8 /4.9
Open hearth melting, uncontrolled	0	60.7	27.5	7.4/3.4	12.9/5.9	10.4/4.7	12.9/5.9	9.2 /4.2
Open hearth melting, with electrostatic precipitator	95-98.5	3.04-0.94	1.38-0	7.4/3.4	12.9/5.9	10.4/4.7	12.9/5.9	9.2 /4.2
Open hearth melting, with baghouse	99.9	0.061	0.028	7.4/3.4	12.9/5.9	10.4/4.7	12.9/5.9	9.2 4.2
Open hearth melting, with venturi scrubber	96-99	2.42-0.61	1.10-0	7.4/3.4	12.9/5.9	10.4/4.7	12.9/5.9	9.2 /4.2
Open hearth, oxygen lanced melting, uncontrolled	0	55.2	25.0	7.4/3.4	12.9/5.9	10.4/4.7	12.9/5.9	8.3 /3.8
Open hearth, oxygen lanced melting with electrostatic precipitator	95-98	2.76-1.10	1.25-0	7.4/3.4	12.9/5.9	10.4/4.7	12.9/5.9	8.3 /3.8
Open hearth, oxygen lanced melting, with baghouse	99	.55	0.25	7.4/3.4	12.9/5.9	10.4/4.7	12.9/5.9	8.3 /3.8
Open hearth, oxygen lanced melting, with venturi scrubber	95-98	2.76-1.10	1.25-0	7.4/3.4	12.9/5.9	10.4/4.7	12.9/5.9	8.3 /3.8
Electric induction, uncontrolled	0	0.53	0.25	7.4/3.4	12.9/5.9	10.4/4.7	12.9/5.9	.09 /.04

Potential Source Compliance and Emission Limitations: Electric arc, open-hearth, and open-hearth with oxygen lancing as described in Section D, equipped with electrostatic precipitators, venturi scrubbers, or a baghouse, will be able to comply with even the most restrictive limitations.

The Environment Reporter was used to update the emission limitations.

G. References:

The following literature was used to develop the information presented for steel foundries:

1. Exhaust Gases from Combustion and Industrial Processes, Engineering Science, Inc., EPA, Contract No. EHSD 71-36, October 2, 1971.

2. Compilation of Air Pollutant Emission Factors (Second Edition), EPA, Publication No. AP-42, April 1973.

3. Analysis of Final State Implementation Plans - Rules and Regulations, EPA, Contract No. 68-02-0248, July 1972, Mitre Corporation.

The following references were consulted but not used directly to develop the information on steel foundries:

4. Hopper, T. G., Impact of New Source Performance Standards on 1985 National Emissions from Stationary Sources, Volume II, (Final Report), TRC - The Research Corporation of New England, EPA, Contract No. 68-02-1382, Task No. 3, October 24, 1975.

5. Particulate Pollutant System Study, Volume I - Mass Emissions, Midwest Research Institute, EPA, Contract No. CPA 22-69-104, May 1, 1971.

A. Source Category: VII Metallurgical Industry

B. Sub Category: Ferroalloy

C. Source Description:

A ferroalloy is an alloy of iron and one or more other metals used for deoxidizing molten steels and making alloy steels. There are three major categories of ferroalloys:

1. silicon-based alloys, including ferrosilicon and calcium-silicon,
2. manganese-based alloys, including ferromanganese and silicomanganese, and
3. chromium-based alloys, including ferrochromium and ferrosilicochrome.

Manganese is the most widely used element in ferroalloys, followed by silicon, chromium, and phosphorous. Figure VII-4 shows a typical flow diagram of ferroalloy production.(1)7

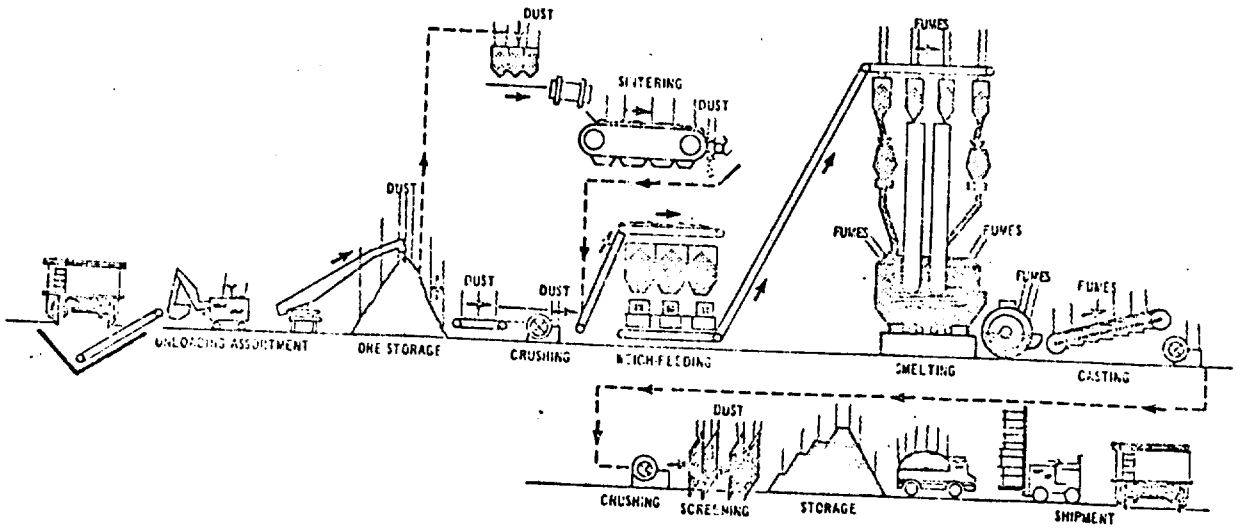

Figure VII-4: Ferroalloy Production Process

There are four major methods used for the smelting operation needed to produce ferroalloys and high purity metallic additives for steel making. These are:

1. blast furnace,
2. electric smelting furnace,
3. alumino silico-thermic process, and
4. electrolytic deposition.

The choice of process is generally dependent on both the alloy produced and the availability of furnaces.

Ferromanganese, the principal metallurgical form of manganese, is produced in either the blast furnace or the electric-arc furnace. The coke-burning blast furnace is not an efficient smelter for ferroalloys of manganese, chrome, and silicon. The submerged arc, or the roofed-in open bath electric smelter, can more effectively complete the reduction of the oxides and is therefore more widely used than the blast furnace.

Ferromanganese is produced in the blast furnace by carbon reduction of manganese ore and iron ore in the presence of coke and limestone. Ferromanganese blast furnaces usually operate at blast temperatures of 1100-1200°F (593-649°C). High operating efficiencies are favored by the following:

1. small slag volume,
2. a basic slag,
3. high blast temperatures, and
4. coarse ores.

The majority of ferroalloy furnaces are submerged arc furnaces which are charged with raw ore, coke, and limestone. Normally three electrodes are used; they protrude into the furnace charge to a depth of 3 to 5 feet. The major smelting occurs in the reaction zones surrounding the electrodes.

Simplified reactions illustrating the manufacture of ferroalloys are as follows:[2]V-13

Ore Constituents	+	Reducing Agent	Heat →	Molten Alloy	+	Furnace Gas
Cr_2O_3	+	3C	→	2Cr	+	3CO
MnO	+	C	→	Mn	+	CO
SiO_2	+	2C	→	Si	+	2CO
Fe_2O_3	+	3C	→	2FE	+	3CO
CaO	+	3C	→	CaC_2	+	CO

More than 75% of the ferroalloys produced are the products of electric smelting furnaces. The average annual production of a ferroalloy furnace is 14,800 tons;[2]VI-19 and the average production rate is 6.9 tons/hr.[4]Ferroalloy

D. Emission Rates:

The production of ferroalloys has many dust-producing steps. The dust resulting from:

1. raw material handling,
2. mix delivery, and
3. crushing and sizing of the solidified product

can be handled by conventional techniques and is a secondary problem compared to the furnace emissions.

Oregon	total organic and inorganic particulate matter from plants constructed on or after January 1, 1973	7.0 lbs/ton of aluminum (monthly avg) 5.0 lbs/ton of aluminum (avg annual)
	total organic and inorganic particulate matter from plants constructed on or before January 1, 1973	13.0 lbs/ton of aluminum (monthly avg) 10.0 lbs/ton of aluminum (annual avg)
Washington	particulate matter from the reduction process (pot-lines) reduced to lowest level (BACT) but not to exceed	15.0 lbs/ton of aluminum (daily basis)

Potential Source Compliance and Emission Limitations: Existing control technology is adequate to control emissions from a 15 ton/hour plant to meet even the most restrictive emission limitations.

The Environment Reporter was used to update the emission limitations.

G. References:

Literature used in the development of the information in this section on primary aluminum is listed below.

1. Compilation of Air Pollution Emission Factors (Second Edition), EPA, Publication No. AP-42, March 1975.

References consulted but not directly used to develop this section include:

2. Air Pollution Control in the Primary Aluminum Industry, Volume I of II, Sections 1 through 10, Singmaster and Breyer, EPA-450/3-73-004A, July 23, 1973.

3. Profile of an Industry: Aluminum, Metals Week, August 12, 1968.

F. New Source Performance Standards and Regulation Limitations:

New Source Performance Standards (NSPS): EPA promulgated New Source Performance Standards for Ferroalloy Production Tuesday, May 4, 1976 in the Federal Register, Vol. 41, No. 87. These standards pertain to the exit stack conditions of the control device used for the submerged electric arc furnaces. The standard is expressed in terms of kilograms per megawatt hours or pounds per megawatt hours. There are essentially two standards depending on the material charged to the furnace. The following two charge types and limitations express the New Source Performance Standards for Ferroalloy Production.

Charge Material	Limitation
Silicon metal, ferrosilicon, calcium silicon, silicomanganese, zirconium	0.45 kg/MW-hr (0.99 lbs/MW-hr)
Highcarbon ferrochrome, charge chrome, silicomanganese, calcium carbide ferrochrome, silicon, ferromanganese silicon, or silvery iron	0.23 kg/MW-hr (0.51 lbs/MW-hr)

Since the units for the New Source Performance Standards are not the same as those listed in Section D, no attempt was made to compare emissions and limitations.

State Regulations for New and Existing Sources: Particulate emission regulations for varying process weight rates are expressed differently from state to state. There are four types of regulations that are applicable to the ferroalloy industry. The four types of regulations are based on:

1. concentration,
2. control efficiency,
3. gas volume, and
4. process weight.

Concentration Basis: Alaska, Delaware, Washington and New Jersey are representative of states that express particulate emission limitations in terms of grains/standard cubic foot and grains/dry standard cubic foot for general process. The limitations for these four states are:

Alaska	-	0.05 grains/standard cubic foot
Delaware	-	0.20 grains/standard cubic foot
Washington	-	0.20 grains/dry standard cubic foot
Washington	-	0.10 grains/dry standard cubic foot (new)
New Jersey	-	0.02 grains/standard cubic foot

Gas Volume Basis: Texas expresses particulate emission limitations in terms of pounds/hour for specific stack flow rates expressed in actual cubic feet per minute. The Texas limitations for particulates are as follows.

1	- 10,000 acfm	-	9.11 lbs/hr
10,000	- 100,000 acfm	-	38.00 lbs/hr
10^5	- 10^6 acfm	-	158.6 lbs/hr

Process Weight Rate Basis for New Sources: Several states have adopted process limitations for new sources with a process weight rate of 6.9 tons/hr. For sources with this process weight rate, Illinois is representative of a most restrictive limitation, 6.0 lbs/hr (2.7 kg/hr) and New Hampshire is representative of a least restrictive limitation, 14.7 lbs/hr (6.7 kg/hr).

Process Weight Rate Basis for Existing Sources: The majority of states have adopted process limitations for existing sources for a wide range of process weight rates. For sources with a process weight rate of 6.9 tons/hr, Colorado is representative of a most restrictive limitation, 11.9 lbs/hr (5.4 kg/hr) and Mississippi is representative of a least restrictive limitation, 14.9 lbs/hr (6.8 kg/hr).

Process Weight Rate Basis for Specific Sources: Pennsylvania is the only state that has a limitation specifically for a ferroalloy production furnace. The limitation in Pennsylvania is determined by the equation:

$A = 0.76E^{0.42}$ where A = allowable emissions, lbs/hr
E = emission index = F x W lbs/hr
F = process factor, lbs/unit
W = production or charging rate, units/hr

For a typical plant as described in Section D producing 13,800 lbs/hr, substitution into this equation results in a maximum allowable emission rate of 1.03 lbs/hr. Table 1 from Pennsylvania's regulation specifies F = 0.3 lbs/ton of product. This would make Pennsylvania's limitation the most restrictive. Table VII-22 presents controlled and uncontrolled emissions and limitations from ferroalloy production.

TABLE VII-22
PARTICULATE EMISSIONS AND LIMITATIONS FROM FERROALLOY PRODUCTION

Type of Operation & Control	% Control	Emissions (Based on 6.9 tons/hr) lb/hr	Emissions (Based on 6.9 tons/hr) kg/hr	Limitations(5) lb/hr / kg/hr Ferroalloy PA	General Process Industries New Sources Ill.	General Process Industries New Sources NH	General Process Industries Existing Sources Col.	General Process Industries Existing Sources Miss.	General Process Industries Existing Sources UT 85% Control
Open Furnace									
50% FeSi, Uncontrolled	0	1380	628	1.0/.47	6.0/2.7	14.7/6.7	11.9/5.4	14.9/6.8	208 / 94.2
75% FeSi, Uncontrolled	0	2180	990	1.0/.47	6.0/2.7	14.7/6.7	11.9/5.4	14.9/6.8	327 /148
90% FeSi, Uncontrolled	0	3910	1770	1.0/.47	6.0/2.7	14.7/6.7	11.9/5.4	14.9/6.8	587 /266
Silicon Metal, Uncontrolled	0	4325	1960	1.0/.47	6.0/2.7	14.7/6.7	11.9/5.4	14.9/6.8	694 /315
Silicon Manganese, Uncontrolled	0	675	306	1.0/.47	6.0/2.7	14.7/6.7	11.9/5.4	14.9/6.8	101 / 45.9
Closed Furnace									
FeMn, Uncontrolled	0	311	141	1.0/.47	6.0/2.7	14.7/6.7	11.9/5.4	14.9/6.8	46.7/ 21.2
FeMn, with Scrubber	99.9	.31	.14	1.0/.47	6.0/2.7	14.7/6.7	11.9/5.4	14.9/6.8	46.7/ 21.2
Open Furnace									
50% FeSi, with Venturi Scrubber	99.9	1.4	0.63	1.0/.47	6.0/2.7	14.7/6.7	11.9/5.4	14.9/6.8	46.7/ 21.2
Silicon Metal with Baghouse	99	43.3	19.6	1.0/.47	6.0/2.7	14.7/6.7	11.9/5.4	14.9/6.8	-
Silicon Manganese, with Baghouse	99	13.5	6.1	1.0/.47	6.0/2.7	14.7/6.7	11.9/5.4	14.9/6.8	-
FeCr, with Baghouse	99	-	-	1.0/.47	6.0/2.7	14.7/6.7	11.9/5.4	14.9/6.8	-
FeMn, with Venturi Scrubber	99.9	-	-	1.0/.47	6.0/2.7	14.7/6.7	11.9/5.4	14.9/6.8	-

Potential Source Compliance and Emissions Limitations: Furnaces used in ferroalloy production are a significant source of particulate emissions. All furnaces must be controlled in order to meet the emission limitations. With the exception of Pennsylvania's ferroalloy limitation, control technology is capable of meeting the applicable regulations for sources producing silicon metal as described in Section D. This source would have to be controlled by 99.7% in order to meet the strictest regulation other than Pennsylvania's ferroalloy limitation.

The Environment Reporter was used to update the emissions limitations.

G. References:

The following literature was used to develop the information on ferroalloys:

1. Background Information for Standards of Performance: Electric Submerged Arc Furnaces for Production of Ferroalloys, Volume I: Proposed Standards, Emission Standards and Engineering Division, EPA-450/2-74-018a, October 1974.

2. Dealy, James O., Arthur M. Killin, Engineering and Cost Study of the Ferroalloy Industry, EPA-450/2-74-008. May 1974.

3. Compilation of Air Pollutant Emission Factors (Second Edition), EPA, Contract No. AP-42, April 1973.

4. Particulate Pollutant System Study, Volume III - Handbook of Emission Properties, Midwest Research Institute, EPA, Contract No. CPA-22-69-104, May 1, 1971.

5. Analysis of Final State Implementation Plans - Rules and Regulations, EPA, Contract No. 68-02-0248, July 1972, Mitre Corporation.

Another source which was not used directly but which could provide information on ferroalloy production is:

6. Air Pollutant Emission Factors, TRW Systems Group, Contract No. CPA-22-69-119, April 1970.

A. Source Category: VII Metallurgical Industry

B. Sub Category: Primary Aluminum

C. Source Description:

Aluminum production from bauxite ore is a multistep process capable of producing large quantities of emissions because of the nature and the size of the process. Alumina production is categorized into two basic parts:

1. Extraction of alumina from bauxite
2. Electrolytic reduction of alumina to aluminum

Three states, Arkansas, Alabama, and Georgia produce all of the U.S. bauxite. Ninety-four percent of the total bauxite is used for producing alumina and the rest is for refractories, chemicals, and abrasives. Plants producing alumina from bauxite are generally located in coastal areas. The aluminum plants are located in areas of low power costs, because electricity requirements for reduction of alumina to aluminum are high.

The aluminum-containing minerals are:

Alumite: A white mineral containing 37% alumina $KAL_3(SO_4)_2(OH)_6$
Aluminum Phosphate Rock: 4% to 20% alumina and small amounts of U_3O_8
Aluminous shale and slate: 20% to 24% Al_2O_3
Dawsonite: 35% alumina, $NaAL(OH)_2CO_3$
High-alumina clays: 25% to 35% alumina, consisting mainly of kaolinite
Igneous rocks: 23% to 28% alumina and feldspar
Saprolite: 25% to 36% alumina in deposits of saprolite
Coal ash: Coal ash contains alumina and sulfuric acid
Bauxite: Classified according to degree of hydration of alumina

1. Monohydrate bauxite ($Al_2O_3 \cdot H_2O$), boehmite and diaspore
2. Trihydrate bauxite ($Al_2O_3 \cdot 3H_2O$), has low silica content known as gibbsite or hydrargillite

Bauxite ore is treated to refine alumina by one of the following:

1. Bayer process
2. Combination process

The Combination process is used for treating high-silica-content bauxites, such as those from Arkansas. Figure VII-20 presents a schematic of both the Bayer process and the Combination process.

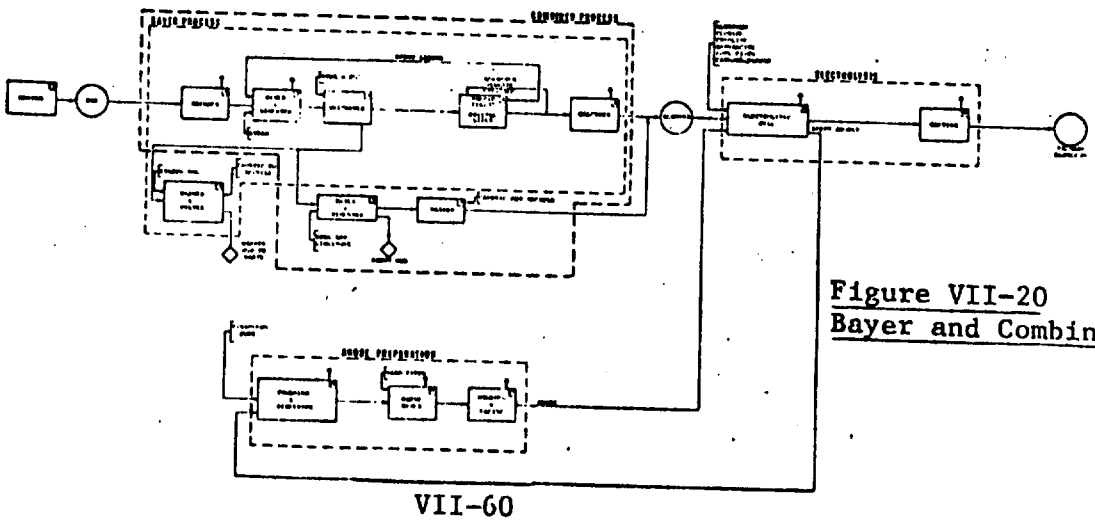

Figure VII-20
Bayer and Combined Proces

Aluminum metal is manufactured by the Hall-Heroutt process, which involves the electrolytic reduction of alumina dissolved in a molten salt bath of cryolite (a complex of $NAF.AlF_3$) and various salt additives:

$$2Al_2O_3 \rightarrow 4Al + 3O_2$$

Alumina Electrolysis Aluminum Oxygen

The electrolysis is performed in a carbon crucible housed in a steel shell, known as a "pot." The electrolysis employs the carbon crucible as the cathode (negative pole) and a carbon mass as the anode (positive pole). The type of anode configuration used distinguishes the three types of pots:

1. prebaked (PB),
2. horizontal stud Soderberg (HSS), and
3. vertical-stud Soderberg (VSS).

The major portion of aluminum produced in the United States (61.9 percent of 1970 production) is processed in prebaked cells. In this type of pot, the anode consists of blocks that are formed from a carbon paste and baked in an oven prior to their use in the cell. These blocks -- typically 14 to 24 per cell -- are attached to metal rods and serve as replaceable anodes. As the reduction proceeds, the carbon in these blocks is gradually consumed (at a rate of about 1 inch per day) by reaction with the oxygen by-product.

The second most commonly used furnace (25.5 percent of 1970 production) is the horizontal-stud Soderberg. This type of cell uses a "continuous" carbon anode; that is, a mixture of pitch and carbon aggregate called "paste" is added at the top of the superstructure periodically, and the entire anode assembly is moved downward as the carbon burns away. The cell anode is contained by aluminum sheeting and perforated steel channels, through which electrode connections, called studs, are inserted into the anode paste. As the baking anode is lowered, the lower row of studs and the bottom channel are removed, and the flexible electrical connectors are moved to a higher row. One disadvantage of baking the paste in place is that heavy organic materials (tars) are added to the cell effluent stream. The heavy tars often cause plugging of the ducts, fans, and control equipment, an effect that seriously limits the choice of air cleaning equipment.

The vertical-stud Soderberg is similar to the horizontal-stud furnace, with the exception that the studs are mounted vertically in the cell. The studs must be raised and replaced periodically, but that is a relatively simple process.(1)7.1-1-7.1-2

D. Emission Rates:

Particulate emissions from aluminum reduction processes come primarily from the reduction cells and the anode baking furnaces. Large amounts of particulates are also generated during the calcining of aluminum hydroxide, but the economic value of this dust is such that extensive controls have been employed to reduce emissions to relatively small quantities. Finally, small amounts of particulates are emitted from the bauxite grinding and materials handling processes.

Particulate emissions from reduction cells consist of alumina and carbon from anode dusting, cryolite, aluminum fluoride, calcium fluoride, chiolite ($Na_5Al_3F_{14}$), and ferric oxide. Particulates less than 1 micron in diameter represent the large percentage (35% to 44% by weight) of uncontrolled effluents.

Controlled and uncontrolled emission factors for total particulates from aluminum production are presented in Table VII-15.(1) 7.1-2-7.1-4

TABLE VII-15

PARTICULATE EMISSIONS FROM PRIMARY ALUMINUM PRODUCTION

Type of Operation and Control	% Control	Emissions (based on 15 tons/hr) lbs/ton	kg/Mton	lbs/hr	kg/hr
Bauxite Grinding, Uncontrolled	0	6.0	3.0	90.	40.8
Bauxite Grinding, Spray Tower	70	1.8	.9	27.	12.2
Bauxite Grinding, Floating Bed Scrubber	72	1.7	.9	25.2	11.6
Bauxite Grinding, Quench Tower, Spray Screen	83	1.0	.5	15.3	6.8
Bauxite Grinding, Precipitator	98	.1	.05	1.8	.7
Calcining, Uncontrolled	0	200.	100.	3000.	1360.
Calcining, Spray Tower	70	60.	30.	900.	408.
Calcining, Floating Bed Scrubber	72	56.	28.	840.	381.
Calcining, Quench Tower (Spray Screen)	83	34.	17.	510.	231.
Calcining, Electrostatic Precipitator	98	4.	2.	60.	27.
Anode Baking, Uncontrolled	0	3.0	1.5	45.	20.4
Anode Baking, Electrostatic Precipitator	62	76.0	38.	1140.	517.
Anode Baking, Self Induced Spray	98	4.0	2.	60.	27.2
Prebaked Reduction Cell, Uncontrolled	0	81.3	40.7	1220.	553.
Prebaked Reduction Cell, Spray Tower	80	40.	20.	600.	272.
Prebaked Reduction Cell, Floating Bed Scrubber	80	40.	20.	600.	272.
Prebaked Reduction Cell, Electrostatic Precipitator	89-93	22.-14.	11.-7.	330.-210.	150.-95.
Prebaked Reduction Cell, Multiple Cyclone	78	64.	32.	960.	435.
Prebaked Reduction Cell, Fluid Bed Dry Scrubber	98	4.	2.	60.	27.
Prebaked Reduction Cell, Coated Filter Dry Scrubber	93	14.	7.	210.	95.
Prebaked Reduction Cell, Chamber Scrubber	85	30.	15.	450.	204.
Prebaked Reduction Cell, Vertical Flow Packed Bed	85	30.	15.	450.	204.
Prebaked Reduction Cell, Dry Ammonia Adsorption	98	4.	2.	60.	27.
Horizontal-Stud Soderberg Cell, Uncontrolled	0	98.4	49.2	1476.	670.
Horizontal-Stud Soderberg Cell, Spray Tower	63-79	74.-42.	37.-21.	1110.-630.	503.-286.
Horizontal-Stud Soderberg Cell, Floating Bed Scrubber	78	56.	28.	840.	381.
Horizontal-Stud Soderburg Cell, Electrostatic Precipitator	93	14.	7.	210.	95.
Vertical-Stud Soderburg Cell, Uncontrolled	0	78.4	39.2	1176.	533.
Vertical-Stud Soderburg Cell, Spray Tower	75	19.6	9.8	294.	133.
Vertical-Stud Soderburg Cell, Electrostatic Precipitator	90-99	7.8-8.	3.9-4.	117.-12.	53.-5.4
Vertical-Stud Soderburg Cell, Multiple Cyclone	95	3.9	2.0	58.5	26.5
Vertical-Stud Soderburg Cell, Dry Alumina Adsorption	98	1.6	.8	24.	10.9
Vertical-Stud Soderburg Cell, Venturi Scrubber	96	3.1	1.6	46.5	21.1
Materials Handling, Uncontrolled	0	10.0	5.	150.	68.
Materials Handling, Spray Tower	70	3.	1.5	45.	20.4
Materials Handling, Floating Bed Scrubber	72	2.8	1.4	42.	19.1
Materials Handling, Quench Tower Spray Screen	83	1.7	.9	25.5	11.6
Materials Handling, Electrostatic Precipitator	98	.2	.1	3.	1.4

E. Control Equipment:

Because many different kinds of gases and particulates are emitted from reduction cells, many kinds of control devices have been employed. To abate both gaseous and particulate emissions, one or more types of wet scrubbers -- spray tower and chambers, quench towers, floating beds, packed beds, venturis, and self-induced sprays -- are used on all three cells and on anode baking furnaces. In addition, particulate control methods, such as electrostatic precipitators (wet and dry), multiple cyclones, and dry scrubbers (fluid-bed and coated-filter types), are employed with baking furnaces on PB and VSS cells. Dry alumina adsorption has been used at several PB and VSS installations in

foreign countries. In this technique, both gaseous and particulate fluorides are controlled by passing the pot off-gases through the entering alumina feed, on which the fluorides are absorbed; the technique has an overall control efficiency of 98 percent. In the aluminum hydroxide calcining, bauxite grinding, and materials handling operations, various dry dust collection devices -- such as centrifugal collectors, multiple cyclones, or electrostatic precipitators -- and wet scrubbers or both may be used.[1]7.1-4

F. New Source Performance Standards and Regulation Limitations:

New Source Performance Standards (NSPS): EPA has promulgated NSPS for Primary Aluminum Reduction Plants on January 26, 1976. These standards limit the emissions of flourides to:

(1) 1 kg/metric ton of aluminum produced for vertical stud Soderberg and horizontal stud Soderberg plants
(2) 0.95 kg/metric ton of aluminum produced for potroon groups at prebake plants, and
(3) 0.05 kg/metric ton of aluminum equivalent for anode bake plants.

However these standards to not relate directly to particulate emissions and as such, are not included in the following analysis.

State Regulations for New and Existing Sources: Five states (Alabama, Louisiana, Nevada, Oregon and Washington) have regulations specifically for aluminum. These five states contain virtually all of the aluminum producing industry. The regulations for these five states cover total emissions for each ton of aluminum produced, to specific limitations for indivdual pieces of process equipment at a specific plant. A description of the limitations that apply to each of the above states is as follows:

State	Criteria	Limitation
Alabama	baking of carbon anodes and from the reduction process (potlines)	22 lbs/ton of aluminum
Louisiana	reduction process (potlines) for the Horizontal Stud Soderberg process	20 lbs/ton of aluminum (avg. three 24 hour periods)
Nevada	Basic Refractory Division facility of Basic, Inc., at Gabbs	Stack A $E = 2.04\times10^{-4}P$ Stack B $E = 1.1\times10^{-4}P$ Stack C $E = 1.41\times10^{-3}P$ Stack D $E = 1.48\times10^{-3}P$ Kiln No. 2 $E = 1.633\times10^{-2}P$ Kiln No. 3 $E = 5.5\times10^{-3}P$

Oregon	total organic and inorganic particulate matter from plants constructed on or after January 1, 1973	7.0 lbs/ton of aluminum (monthly avg) 5.0 lbs/ton of aluminum (avg annual)
	total organic and inorganic particulate matter from plants constructed on or before January 1, 1973	13.0 lbs/ton of aluminum (monthly avg) 10.0 lbs/ton of aluminum (annual avg)
Washington	particulate matter from the reduction process (pot-lines) reduced to lowest level (BACT) but not to exceed	15.0 lbs/ton of aluminum (daily basis)

Potential Source Compliance and Emission Limitations: Existing control technology is adequate to control emissions from a 15 ton/hour plant to meet even the most restrictive emission limitations.

The Environment Reporter was used to update the emission limitations.

G. References:

Literature used in the development of the information in this section on primary aluminum is listed below.

1. Compilation of Air Pollution Emission Factors (Second Edition), EPA, Publication No. AP-42, March 1975.

References consulted but not directly used to develop this section include:

2. Air Pollution Control in the Primary Aluminum Industry, Volume I of II, Sections 1 through 10, Singmaster and Breyer, EPA-450/3-73-004A, July 23, 1973.

3. Profile of an Industry: Aluminum, Metals Week, August 12, 1968.

A. Source Category: VIII Mineral Products Industry

B. Sub Category: Asphalt Batching

C. Source Description:

Hot-mix asphalt plants produce asphalt paving material which consists of an aggregate of mineral load-bearing material that has been mixed with asphalt cement. Asphalt batching processes include:

(1) Proportional feeding of cold aggregates,
(2) Heating and drying of the aggregates to predetermined levels of moisture content, and
(3) Coating with hot asphalt to produce a specific paving mix.

A typical process diagram of an asphalt batching plant is shown in Figure VIII-1.(2)117 Stored sand and aggregate feed into a bucket elevator or cold elevator which discharges into a rotary drier that may be either gas or oil-fired. The dried aggregate discharges to the hot elevator which feeds into vibrating screens for size classification and interim storage. Selected amounts of the sized aggregates are dropped from the storage bins to the weigh hopper. The weighed aggregate is then dropped to the mixer, where the hot asphalt is introduced to produce the finished product. The final product mixture is discharged in batches or continuously depending upon the individual plant set-up.

A typical batching plant will produce approximately 657,000 tons (592,000 M tons) of paving material annually. The typical plant has a capacity of 150 tons (136 M tons) per hour, and operates at 50 percent on-stream time.(7)13

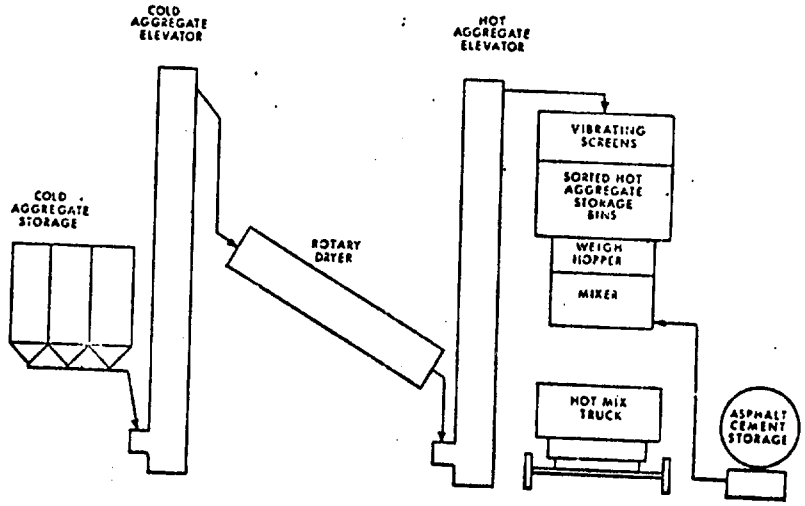

Figure VIII-1: Flow Diagram for Hot-Mix Asphalt Batch Plant

D. Emission Rates:

Sources of particulate emissions from an asphalt batch plant include:

(1) Rotary dryer,

(2) Hot-aggregate elevators,
(3) Vibrating screens, and
(4) Hot-aggregate storage bins, weigh hoppers, mixers, and transfer points.
(5) Handling of raw materials and fugitive emissions.

The largest process dust emission source is the rotary dryer, which releases approximately 77 percent of the total particulate excluding fugitive emissions emitted by an asphalt batch plant. (5) 328 Secondary sources include materials handling and sizing equipment. Particulate emissions from asphalt batching plants are summarized in Table VIII-1. (3) 8.1-4

TABLE VIII-1

PARTICULATE EMISSIONS FROM ASPHALT BATCHING

Type of Operation & Control	% Control	Particulate Emissions (Based on 150 tons/hr)			
		lbs/ton	kg/MT	lbs/hr	kg/hr
All Process Sources, Uncontrolled	0	45.0	22.5	6750	3061
All Process Sources, with Precleaner	67	15.0	7.5	2250	1021
All Process Sources, with High Eifficiency Cyclone	96.2	1.7	0.85	255	116
All Process Sources, with Spray Tower	99.1	0.4	0.20	60	27
All Process Sources, with Baghouse	99.7	0.1	0.05	15	6.8

E. Control Equipment:

The choice of applicable control equipment ranges from dry mechanical collectors to scrubbers and fabric collectors. Application of electrostatic precipitators has recently been tried on several plants. Practically all plants use primary dust collection equipment, such as large diameter cyclone, skimmer, or settling chambers. The chambers are used as classifiers with the collected materials being returned to the hot aggregate elevator to combine with the dryer aggregate load. Because there is a high level of contaminants in the air discharge from the primary collector, the effluent from this device is ducted to a secondary or tertiary collection device. Fabric collectors are presently in wide use as the final collection device. Table VIII-1 shows the controlled and uncontrolled particulate emissions from an asphalt batch plant. (3) 8.1-4

F. New Source Performance Standards and Regulation Limitations:

New Source Performance Standards (NSPS):

On March 8, 1974 EPA promulgated New Source Performance Standards for asphalt batching plants. The promulgated standards limit particulate matter emissions to 90 mg/dscm (0.04 gr/dscf) and 20 percent opacity.

State Regulations for New and Existing Sources: Particulate emission regulations for varying process weight rates are expressed differently from state to state. There are four types of general process regulations that are applicable to the asphalt batching industry. The four types of regulations are based on:

1. concentration
2. control efficiency
3. gas volume, and
4. process weight

Concentration Basis: Alaska and New Jersey are representative of states that express particulate emission limitations in terms of grains/standard cubic foot for general processes. The limitations for these states are:

Alaska - 0.05 grains/standard cubic foot
New Jersey - 0.02 grains/standard cubic foot

Several states have expressed particulate emission limitations specifically for asphalt batching. These states and limitations are as follows:

Vermont - 0.07 grains/dry standard cubic foot
Washington - 0.10 grains/dry standard cubic foot

Several states have adopted particulate emission limitations for new sources identical to EPA "New Source Performance Standards." These states are:

Colorado - 0.04 grains/dry standard cubic foot
Iowa - 0.04 grains/dry standard cubic foot
Kentucky - 0.04 grains/dry standard cubic foot
Oregon - 0.04 grains/dry standard cubic foot

Control Efficiency Basis: Utah requires the asphalt batching industry to maintain 85% control efficiency over the uncontrolled emissions.

Process Weight Rate Basis for Specific Sources: Delaware, Georgia, Idaho, Massachusetts, New Hampshire, New Mexico, North Carolina, Pennsylvania, South Carolina, Tennessee, Virginia and West Virginia have regulations specifically for asphalt batching and/or light aggregate industries. These limits are expressed in terms of lbs/hr for a process weight rate of 150 tons/hour. The following lists the states and the respective limitations that apply:

Delaware	-	40 lbs/hour
Georgia	-	600 lbs/hr (existing), 189 lbs/hr (new)
Idaho	-	53.4 lbs/hr
Massachusetts	-	13.4 lbs/hr (existing), 6.7 lbs/hr (new)
New Hampshire	-	40 lbs/hr
New Mexico	-	40 lbs/hr
North Carolina	-	42 lbs/hr
Pennsylvania	-	13.2 lbs/hr
South Carolina	-	45 lbs/hr (new), 67 lbs/hr (existing)
Tennessee	-	51.2 lbs/hr
Virginia	-	525.5 lbs/hr
West Virginia	-	40 lbs/hr

Gas Volume Basis: Texas is representative of states that expresses particulate emission limitations in terms of lbs/hour for specific stack flow rates in actual cubic feet per minute. The Texas limitations for particulates are as follows:

1-10,000 acfm - 9.11 lbs/hr
10,000-100,000 acfm - 38.00 lbs/hr
10^5-10^6 acfm - 158.61 lbs/hr

Connecticut, Michigan and Wisconsin have regulations for asphalt batching, which limit the emission of particulates to 0.3 lbs/1000 lbs of flue gas.

Table VIII-2 presents the particulate emissions and limitations from the various asphalt batching processes.

TABLE VIII-2

PARTICULATE EMISSIONS AND LIMITATIONS FROM ASPHALT BATCHING

Type of Operation & Control	% Control	Particulate Emissions (Based on 112,500 tons/yr) lbs/hr	kg/hr	Limitations* lbs/hr / kg/hr Asphalt Batching New Sources MA	GA	Existing Sources New Mex.	PA
All Sources, Uncontrolled	0	6750	3061	6.7/3.0	189/85.7	40/18.1	13.2/6.0
All Sources, with Precleaner	67	2250	1021	6.7/3.0	189/85.7	40/18.1	13.2/6.0
All Sources, with High Efficiency Cyclone	96.2	255	116	6.7/3.0	189/85.7	40/18.1	13.2/6.0
All Sources, with Spray Tower	99.1	60	27	6.7/3.0	189/85.7	40/18.1	13.2/6.0
All Sources, with Baghouse	99.7	15	6.8	6.7/3.0	189/85.7	40/18.1	13.2/6.0

Potential Source Compliance and Emission Limitations: Spray towers, baghouses and electrostatic precipitators are effective in reducing particulate emissions from asphalt batching. Massachusett's limitation of 6.7 lbs/hr for a 150 ton/hour process would require state of the art emission control.

The Environment Reporter was used to update the emission limitations.

G. References:

Literature used to develop the preceding discussion on asphalt batch plants is listed below:

(1) Technical Guide for Review and Evaluation of Compliance Schedules for Air Pollution Sources, PEDCO - Environmental Specialists, Inc., EPA Contract No. 68-02-0607, July, 1973.

(2) Air Pollution Control Technology and Costs in Nine Selected Areas (Final Report), Industrial Gas Cleaning Insitute, EPA Contract No. 68-02-0301, September 30, 1972.

(3) Compilation of Air Pollutant Emission Factors (Second Edition), EPA, Publication No. AP-42, April, 1973.

(4) Analysis of Final State Implementation Plans--Rules and Regulations, EPA, Contract 68-02-0248, July, 1972, Mitre Corporation.

(5) Danielson, J.A., Air Pollution Engineering Manual, Second Edition, AP-40, Research Triangle Park, North Carolina, EPA, May, 1973.

(6) Friedrich, H.E., Air Pollution Control Practicies -- Hot Mix Asphalt Paving Batch Plants, Journal of the Air Pollution Control Association, Volume 19, Number 12, December 1969.

(7) Background Information for Proposed New Source Standards: Asphalt Concrete Plants, Petroleum Refineries, Storage Vessels, Secondary Lead Smelters and Refineries, Brass or Bronze Ingat Production Plants, Iron and Steel Plants, Sewage Treatment Plants, Vol. 1, Main Text, EPA, Office of Air Quality Planning and Standards, June, 1973.

Also consulted but not directly used to develop the discussion on asphalt batch plants were:

(8) Field Operations and Enforcement Manual for Air Pollution Control, Volume III: Inspection Procedures for Specific Industries, Pacific Environmental Services, Inc., EPA Contract No. CPA 70-122, August, 1972.

(9) Particulate Pollutant System Study, Volume III - Handbook of Emission Properties, Midwest Research Institute, EPA Contract No. CPA 22-69-104, May 1, 1971.

A. Source Category: VIII Mineral Products Industry

B. Sub Category: Asphalt Roofing (Blowing)

C. Source Description:

Asphalt blowing is an integral part of the manufacture of asphalt roofing. The product of the blowing operation is asphalt saturant or coating. When mixed with mineral filler, it is used to coat the roofing material and provide a base for the crushed rock surfacing.

Airblowing is mainly a dehydrogenation process: oxygen in the air combines with hydrogen in the oil molecules to form water vapor. The progressive loss of hydrogen results in polymerization or condensation of the asphalt to the desired consistency. The operation is usually carried out batchwise in horizontal or vertical stills equipped to blanket the charge with water or steam, but it may also be done continuously. The asphalt is heated to 300° to 400°F (149° to 204°C) before the airblowing cycle begins. After 1/2 hour to 16 hours of blowing, the Saturant or coating is transported to a tank or spray area for use. A typical plant can blow 24 tons of asphalt per hour, or 210,000 tons per year. (1)2-8

D. Emission Rates:

Emissions from asphalt airblowing stills include oxygen, nitrogen, reactive hydrocarbons, odors, and sulfur. Uncontrolled hydrocarbon emissions from the blowing operation are 1.5 pounds per ton of saturated felt produced, or 2.5 pounds per ton of asphalt blown, as shown in Table VIII-3.(2)8.2-1

TABLE VIII-3

HYDROCARBON EMISSIONS FROM ASPHALT ROOFING MANUFACTURE

Type of Operation and Control	% Control	Hydrocarbon Emissions (CH_4) (Based on 210,000 tons/yr)			
		lbs/ton*	kg/mt	lbs/hr	kg/hr
Asphalt Blowing, uncontrolled	0	2.5	1.25	60.0	27.22
Asphalt Blowing, with afterburner	99	.025	.0125	0.60	0.27

* Ton of Asphalt blown

E. Control Equipment:

Control of emissions from asphalt airblowing stills has been accomplished by incineration. Essential to effective incineration is direct-flame contact with the vapors with a minimum retention time of 0.3 second in the combustion zone, and maintenance of a combustion-chamber temperature of 1200°F (649°C). The uncontrolled and controlled hydrocarbon emissions from asphalt blowing are shown in Table VIII-3.(2)8.2-1

F. New Source Performance Standards and Regulation Limitations:

New Source Performance Standards)NSPS): No New Source Performance Standards have been promulgated for asphalt roofing manufacture.

State Regulations for New and Existing Sources: Very few states have adopted hydrocarbon regulations for specific process industries such as asphalt roofing manufacture. Currently, hydrocarbon emission control regulations are similar to the Los Angeles Rule 66-type legislation which has been instituted by many states and local legislatures. These states include:

Alabama	District of Columbia	Louisiana	Oklahoma
Arizona	Illinois	Maryland	Pennsylvania
California	Indiana	New York	Virginia
Colorado	Kentucky	North Carolina	Wisconsin
Connecticut		Ohio	Puerto Rico

The limitation requires all solvents which are heated not to exceed 15 lbs/day or 3 lbs/hr emission to the atmosphere or be reduced by 85%. Photochemically reactive solvents which are not heated are limited to 40 lbs/day, 8 lbs/hr or be reduced 85%. (3)90

State Regulations for New and Existing Sources: Currently, hydrocarbon emission regulations are patterned after Los Angeles Rule 66 and Appendix B type legislation. Organic solvent useage is categorized by three basic types. These are, (1) heating of articles by direct flame or baking with any organic solvent, (2) discharge into the atmosphere of photochemically reactive solvents by devices that employ or apply the solvent, (also includes air or heated drying of articles for the first twelve hours after removal from #1 type device) and (3) discharge into the atmosphere of non-photochemically reactive solvents. For the purposes of Rule 66, reactive solvents are defined as solvents of more than 20% by volume of the following:

1. A combination of hydrocarbons, alcohols, aldehydes, esters, ethers or ketones having an olefinic or cyclo-olefinic type of unsaturation: 5 per cent
2. A combination of aromatic compounds with eight or more carbon atoms to the molecule except ethylbenzene: 8 per cent
3. A combination of ethylbenzene, ketones having branched hydrocarbon structures, trichloroethylene or tolune: 20 per cent

Rule 66 limits emissions of hydrocarbons according to the three process types. These limitations are as follows:

Process	lbs/day	& lbs/hour
1. heated process	15	3
2. unheated photochemically reactive	40	8
3. non-photochemically reactive	3000	450

Appendix B (Federal Register, Vol. 36, No. 158 - Saturday, August 14, 1971) limits the emission of photochemically reactive hydrocarbons to 15 lbs/day and 3 lbs/hr. Reactive solvents can be exempted from the regulation if the solvent is less than 20% of the total volume of a water based solvent. Solvents which have shown to be virtually unreactive are, saturated halogenated hydrocarbons, perchloroethylene, benzene, acetone and c_1-c_5n-paraffins.

For both Appendix B and Rule 66 type legislation, if 85% control has been demonstrated the regulation has been met by the source even if the lbs/day and lbs/hour values have been exceeded. Most states have regulations that limit the emissions from handling and use of organic solvents. Alabama, Connecticut and Ohio have regulations patterned after Los Angeles Rule 66. Indiana and Louisiana have regulations patterned after Appendix B. Some states such as North Carolina have an organic solvent regulation which is patterned after both types of regulations.

Table VIII-4 presents uncontrolled and controlled emissions and limitations from asphalt roofing manufacture.

TABLE VIII-4

HYDROCARBON EMISSIONS AND LIMITATIONS FROM ASPHALT ROOFING MANUFACTURE

Type of Operation and Control	% Control	Hydrocarbon Emissions (CH_4) (Based on 210, tons/yr) lbs/hr	kg/hr	Limitations[4] lbs/hr/kg/hr Heated	
Asphalt Blowing, uncontrolled	0	60.0	27.22	3	1.36
Asphalt Blowing, with after-burner	99	0.60	.27	3	1.36

* Ton of Asphalt blown

Potential Source Compliance and Emission Limitations: Hydrocarbon emission limitations are not based on process weight. Asphalt roofing is a relatively small emitter, and the typical 24 ton/hour process can be controlled with current technology. For asphalt roofing manufacture to comply with the 3 lbs/hour limitation, a control efficiency of 95% must be maintained.

The Environment Reporter was used to update emission limitations.

G. References:

Literature that was used to develop the discussion on asphalt blowing operations is listed below:

(1) A Screening Study to Develop Background Information to Determine the Significance of Asphalt Roofing Manufacturing (Final Report). The Research Triangle Institute. EPA Contract No. 68-02-0607, Task 2. December, 1972.

(2) Compilation of Air Pollutant Emission Factors.(Second Edition). EPA. Publication No. AP-42. April, 1973.

(3) Technical Guide for Review and Evaluation of Compliance Schedules for Air Pollution Sources. PEDCO-Environmental Specialists, Inc. EPA Contract No. 68-02-0607. July, 1973.

(4) Analysis of Final State Implementation Plans-Rules and Regulations, EPA, Contract 68-02-0248, July, 1972, Mitre Corporation.

(5) Particulate Pollutant System Study, Volume III - Handbook of Emission Properties. Midwest Research Institute. EPA Contract No. CPA 22-69-104. May 1, 1971.

The following sources were also consulted, but did not provide any useful information on asphalt blowing operations:

(6) Field Operations and Enforcement Manual for Air Pollution Control Volume III. Inspection Procedures for Specific Industries. Pacific Environmental Services, Inc. EPA Contract No. CPA 70-122. August, 1972.

(7) Background Information for Proposed New Source Standards: Asphalt Concrete Plants, Petroleum Refineries, Storage Vessels, Secondary Lead Smelters and Refineries, Brass or Bronze Ingot Production Plants, Iron and Steel Plants, Sewage Treatment Plants, Volume I, Main Text. EPA, Office of Air Quality Planning and Standards, June, 1973.

A. Source Category: VIII Mineral Products Industry

B. Sub Category: Brick and Related Clay Products

C. Source Description:

The manufacture of brick and related clay products such as clay pipe, pottery, and some types of refractory brick involves grinding, screening, and blending of raw materials, and forming, cutting or shaping, drying or curing, and firing of the final product.

Surface clays and shales are mined in open pits while most fine clays are found underground. After mining, the material is crushed to remove stones and stirred before it passes onto screens where the aggregate is separated by size.

At the start of the forming process, clay is mixed with water. The three principal processes for forming brick are:

1. stiff-mud,
2. soft-mud, and
3. dry-press processes.

In the stiff-mud process, sufficient water is added to give the clay plasticity before being forced through a die to form the bricks. When the clay contains too much water for the stiff-mud process, its moisture content is increased to 20-30% by addition of water and the bricks are formed in molds by a soft-mud process. In the dry-press process, the clay is mixed with a small quantity of water and formed in steel molds by applying a pressure of 500 to 1500 psi (35.2 to 105 kg/cm^2).

Before firing, the bricks are dried by heat from the kilns. Tunnel kilns and periodic kilns are the two types of kilns most commonly used for the six-step firing operation. Total firing time varies with the type of product; maximum temperatures of about 2000°F (1093°C) are used in firing common brick.

The brick manufacturing process is illustrated in Figure VIII-2.[1] 8.3-2 A typical plant can produce 3.2 tons per hour or 28,000 tons annually.[4] BRICK AND RELATED PRODUCTS

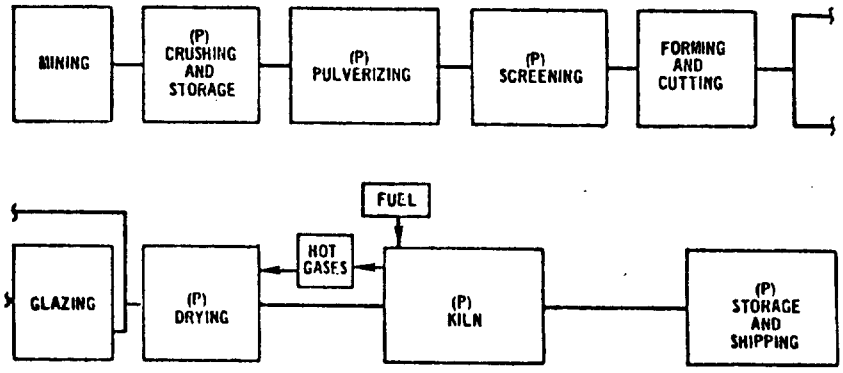

Figure VIII-2: Basic Flow Diagram of Brick Manufacturing Process
("P" denotes a major source of particulate emissions)

D. Emission Rates:

The major sources of particulate emissions from brick manufacturing are indicated by a "P" in the flow diagram of Figure VIII-2. These include:

1. crushing and storage,
2. pulverizing,
3. screening,
4. drying,
5. kiln, and
6. storage and shipping operations.

These emissions are summarized in Table VIII-5.(1)8.3-3

TABLE VIII-5

PARTICULATE EMISSIONS FROM BRICK MANUFACTURE

Type of Operation and Controls	% Control	Particulate Emissions (based on 28,000 tons/yr)			
		lbs/ton	kg/M Ton	lbs/hr	kg/hr
Drying and Grinding, uncontrolled	0	96	48	307.	139.
Storage, uncontrolled	0	34	17	109.	45.4
Gas-fired Tunnel kiln, uncontrolled	0	0.04	0.02	0.128	.058
Oil-fired Tunnel kiln, uncontrolled	0	0.6	0.3	1.92	.87
Coal-fired Tunnel kiln, uncontrolled	0	1.0A	0.5A	32.	15.
Gas-fired Periodic kiln, uncontrolled	0	0.11	0.05	0.35	.16
Oil-fired Periodic kiln, uncontrolled	0	0.9	0.45	2.88	1.31
Coal-fired Periodic kiln, uncontrolled	0	1.6A	0.8A	51.2	23.2
Drying and Grinding, with Fabric Filter	99	0.96	0.48	3.07	1.39
Storage, with Fabric Filter	99	0.34	0.17	1.09	.49
Gas-fired Tunnel kiln, with scrubber	97	0.001	0.0005	0.0032	.0015
Oil-fired Tunnel kiln, with scrubber	97	0.018	0.009	0.0576	.026
Coal-fired Tunnel kiln, with scrubber	97	0.03A	0.015A	.96	.44
Gas-fired Periodic kiln, with scrubber	97	0.003	0.0015	0.0096	.0044
Oil-fired Periodic kiln, with scrubber	97	0.027	0.0135	0.0864	.039
Coal-fired Periodic kiln, with scrubber	97	0.048A	0.024A	1.54	.70

A = % Ash in Coal; Assume 10% Ash.

E. Control Equipment:

A variety of control systems may be used to reduce the particulate emissions from clay manufacture. Although almost any type of particulate control system will reduce emissions from the materials handling process, good design, and hooding are essential to capture the emission. Blending, storage, and grinding emissions are reduced up to 99% using fabric filters while combustion particulates are reduced as much as 97% with a medium energy scrubber.(2)5-2,3-1 The controlled and uncontrolled emissions from clay manufacture are shown in Table VIII-5.

F. New Source Performance Standards and Regulation Limitations:

New Source Performance Standards (NSPS): No NSPS have been promulgated for brick manufacturing.

State Regulations for New and Existing Sources: Particulate emission regulations for varying process weight rates are expressed differently from state to state. There are four types of regulations that are applicable to brick manufacturing. The four types of regulations are based on:

1. concentration,
2. control efficiency,
3. gas volume, and
4. process weight.

Concentration Basis: Alaska, Delaware, Pennsylvania, Washington and New Jersey are representative of states that express particulate emission limitations in terms of grains/standard cubic foot and grains/dry standard cubic foot for general processes. The limitations for these five states are:

Alaska	- 0.05 grains/standard cubic foot
Delaware	- 0.20 grains/standard cubic foot
Pennsylvania	- 0.04 grains/dry standard cubic foot, when gas volume is less than 150,000 dscfm
Pennsylvania	- 0.02 grains/dry standard cubic foot, when gas volumes exceed 300,000 dscfm
Washington	- 0.20 grains/dry standard cubic foot
Washington	- 0.10 grains/dry standard cubic foot (new)
New Jersey	- 0.02 grains/standard cubic foot

Gas Volume Basis: Texas expresses particulate emission limitations in terms of pounds/hour for specific stack flow rates expressed in actual cubic feet per minute. The Texas limitations for particulates are as follows:

1	- 10,000	acfm -	9.11 lbs/hr
10,000	- 100,000	acfm -	38.00 lbs/hr
10^5	- 10^6	acfm -	158.61 lbs/hr

Process Weight Rate Basis for New Sources: Several states have adopted general process limitations for new sources. For new sources with a process weight rate of 3.2 tons/hour, Massachusettes is representative of a most restrictive limitation, 3.8 lbs/hr (1.7 kg/hr) and New Hampshire is representative of a least restrictive limitation, 8.8 lbs/hr (4.0 kg/hr).

Process Weight Rate Basis for Existing Sources: The majority of states express particulate limitations for a wide range of process weight rates. For a process weight rate of 3.2 tons/hour Colorado is representative of a most restrictive limitation, 7.4 lbs/hr (3.4 kg/hr) and New Hampshire is representative of a least restrictive limitation, 10.9 lbs/hr (4.9 kg/hr).

Table VIII-6 presents controlled and uncontrolled emissions and limitations for brick manufacture.

TABLE VIII-6

PARTICULATE EMISSIONS AND LIMITATIONS FROM BRICK MANUFACTURE

Type of Operation and Controls	% Control	Particulate Emissions (based on 28,000 tons/yr) lbs/hr	kg/hr	Limitations[a] lbs/hr/kg/hr New Sources Col.	New Hamp.	UT 85% control	Existing Sources MA	New Hamp.
Drying and Grinding, uncontrolled	0	307.	139.	7.4/3.4	10.9/4.9	46.1/20.91	3.8/1.7	8.8/9.0
Storage, uncontrolled	0	109.	45.4	7.4/3.4	10.9/4.9	16.3/ 7.39	3.8/1.7	8.8/9.0
Gas-fired Tunnel kiln, uncontrolled	0	0.128	.058	7.4/3.4	10.9/4.9	0.019/.009	3.8/1.7	8.8/9.0
Oil-fired Tunnel kiln, uncontrolled	0	1.92	.87	7.4/3.4	10.9/4.9	0.288/.131	3.8/1.7	8.8/9.0
Coal-fired Tunnel kiln, uncontrolled	0	32.	15.	7.4/3.4	10.9/4.9	4.8/2.2	3.8/1.7	8.8/9.0
Gas-fired Periodic kiln, uncontrolled	0	0.35	.16	7.4/3.4	10.9/4.9	0.053/.024	3.8/1.7	8.8/9.0
Oil-fired Periodic kiln, uncontrolled	0	2.88	1.31	7.4/3.4	10.9/4.9	0.432/.196	3.8/1.7	8.8/9.0
Coal-fired Periodic kiln, uncontrolled	0	51.2	23.2	7.4/3.4	10.9/4.9	0.76/.345	3.8/1.7	8.8/9.0
Drying and Grinding, with Fabric Filter	99	3.07	1.39	7.4/3.4	10.9/4.9	--	3.8/1.7	8.8/9.0
Storage, with Fabric Filter	99	1.09	.49	7.4/3.4	10.9/4.9	--	3.8/1.7	8.8/9.0
Gas-fired Tunnel kiln, with scrubber	97	0.0032	.0015	7.4/3.4	10.9/4.9	--	3.8/1.7	8.8/9.0
Oil-fired Tunnel kiln, with scrubber	97	0.0576	.026	7.4/3.4	10.9/4.9	--	3.8/1.7	8.8/9.0
Coal-fired Tunnel kiln, with scrubber	97	.96	.44	7.4/3.4	10.9/4.9	--	3.8/1.7	8.8/9.0
Gas-fired Periodic kiln, with scrubber	97	0.0096	.0044	7.4/3.4	10.9/4.9	--	3.8/1.7	8.8/9.0
Oil-fired Periodic kiln, with scrubber	97	0.0864	.039	7.4/3.4	10.9/4.9	--	3.8/1.7	8.8/9.0
Coal-fired Periodic kiln, with scrubber	97	1.54	.070	7.4/3.4	10.9/4.9	--	3.8/1.7	8.8/9.0

Potential Source Compliance and Emission Limitations: Fabric filters and scrubbers have been successfully used to limit particulate emissions from brick manufacturing.

The control technology exists to adequately meet the emission regulations.

The Environment Reporter was used to update the emissions limitations.

G. References:

Literature used to develop the discussion on bricks and related clay products include the following:

(1) Compilation of Air Pollutant Emission Factors (Second Edition). EPA. Publication No. AP-42. April, 1973.

(2) A Screening Study to Develop Background Information to Determine the Significance of Brick and Tile Manufacturing (Final Report). The Research Triangle Institute. EPA Contract No. 68-02-0607, Task 4, December, 1972.

(3) Particulate Pollutant System Study, Volume III - Handbook of Emission Properties. Midwest Research Institute. EPA Contract No. CPA 22-69-104. May 1, 1971.

(4) Analysis of Final State Implementation Plans-Rules and Regulations. EPA, Contract 68-02-0248, July. 1972, Mitre Corporation.

(5) Hopper, T.G. Impact of New Source Performance Standards on 1985 National Emissions from Stationary Sources, Volume II (Final Report). TRC - The Research Corporation of New England. EPA Contract No. 68-02-1382, Task No. 3, October, 1975.

References which were not used directly to prepare this section but which did contain relative information were:

(6) Danielson, J.A. Air Pollution Engineering Manual, Second Edition. AP-40, Research Triangle Park, North Carolina, EPA, May, 1973.

(7) Air Pollution Control Technology and Costs in Nine Selected Areas (Final Report). Industrial Gas Cleaning Institute. EPA Contract No. 68-02-0301. September 30, 1972.

A. Source Category: VIII Mineral Products Industry

B. Sub Category: Cement Plants

C. Source Description:

Cement is used as an intermediate product for many materials including:

1. concrete,
2. mortar,
3. concrete block, and
4. concrete pipe.

Raw materials for cement production include lime and silica as the principal components, with alumina and ferric oxide as fluxing components. Approximately 3,200 pounds (1,454.5 kg) of dry raw materials are required to produce one ton of cement.

Portland cement is made by either the wet process or the dry process. In either case, there are four major steps in the manufacturing process:

1. quarrying and crushing operations,
2. grinding operations,
3. kiln operations, and
4. finish grinding and packaging operations.

In the dry process, the moisture content of the raw material is reduced to less than 1 percent either before or during the grinding operation. The dried materials are then pulverized into a powder and fed directly into the upper end of a rotary kiln. The material travels downward and is dried, decarbonated, and calcined before fusing to form the clinker. The clinker is cooled, mixed with five percent gypsum by weight, ground to the final product fineness, and stored for packaging and shipment.

In the wet process, a slurry is made by adding water to the initial grinding operation. After the materials are mixed, the excess water is removed, and final adjustments are made to obtain a desired composition. The mixture is fed to the kilns as a slurry of 30 to 40 percent moisture or as a wet filtrate of about 20 percent moisture. The burning, cooling, gypsum addition, and storage are carried out as in the dry process.

These two processes are shown schematically in Figure VIII-3.(1)172 An average plant will produce 522,000 tons of cement annually. Approximately 58 percent of U. S. production is being produced by the wet process.(2)102

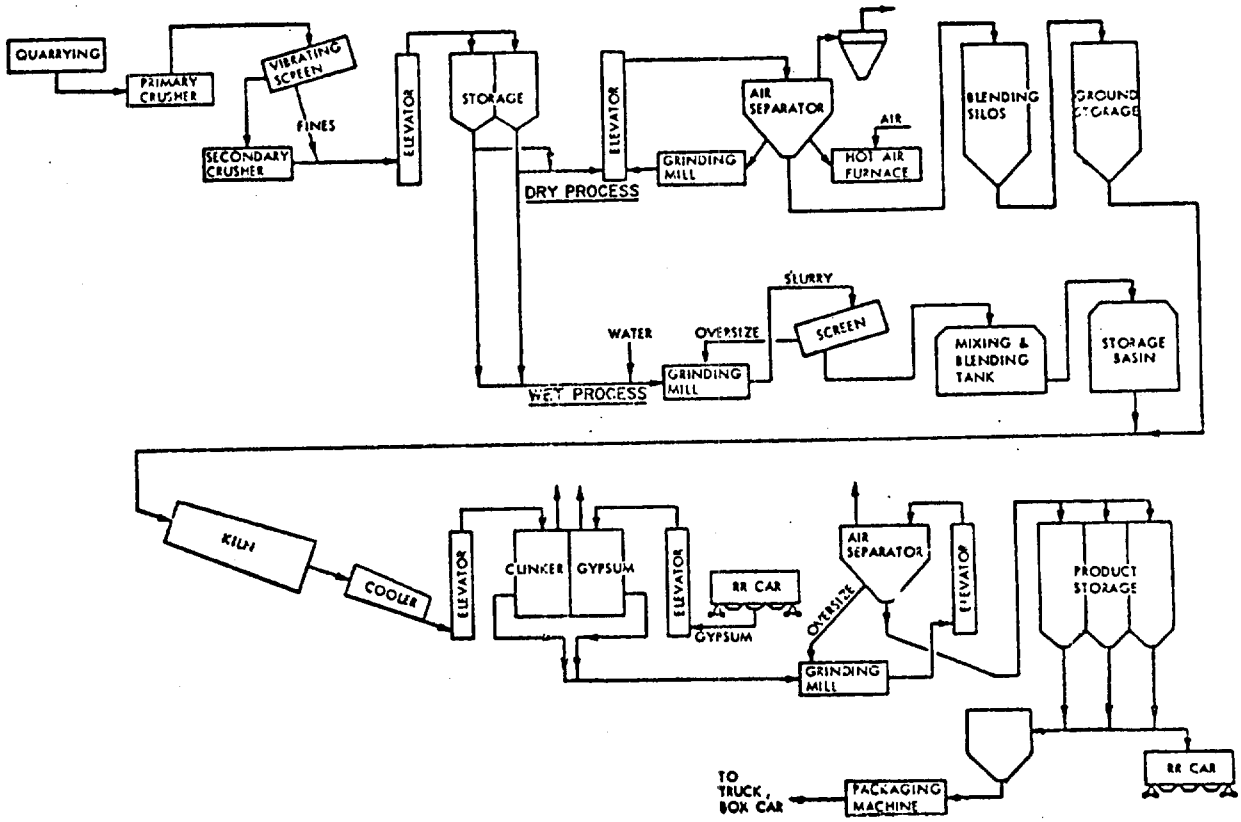

Figure VIII-3: Basic Flow Diagram of Portland Cement Manufacturing Process

D. Emission Rates:

There are six sources of particulate emissions at cement plants:

1. quarrying and crushing,
2. raw material storage,
3. grinding and blending (dry process only),
4. clinker production,
5. finish grinding, and
6. packaging.

The major source of particulate emissions in cement plants is the calcining kiln. Dust is generated in kiln operations by the following:

1. grinding and tumbling action within the kiln,
2. liberation of gases during calcination, and
3. condensation of material that is volatilized during passage through the kiln.

The principal secondary sources in the cement industry are dryers and crushers. These emissions are summarized in Table VIII-7.[3]8.6-3, [1]185

TABLE VIII-7

PARTICULATE EMISSIONS FROM CEMENT MANUFACTURE

Type of Operation & Control	% Control	Particulate Emissions (Based on 60 tons/hr)			
		lbs/ton	kg/MT	lbs/hr	kg/hr
Dry Process: Kiln, Uncontrolled	0	245	122	14,600	6,630
Dry Process: Grinders & Dryers, Uncontrolled	0	96	48	5,720	2,600
Wet Process: Kiln, Uncontrolled	0	228	114	13,590	6,170
Wet Process: Grinders & Dryers, Uncontrolled	0	32	16	954	433
Dry Process: Kiln, with Multicyclones	72.0-89.3	69-26	34-13	4,090-1,560	1,860-708
Dry Process: Kiln, with Electrostatic Precipitator	97.6-99.3	5.7-1.7	2.9- .9	340- 101	154- 46
Dry Process: Kiln, with Multicyclone & Electrostatic Precipitator	88.0-99.7	29- .6	15- .3	1,750- 36	795- 16
Dry Process: Kiln with Multicyclone & Baghouse	99.7	.7	.4	42	19
Wet Process: Kiln, with Electrostatic Precipitator	95.6-99.7	10- .5	5- .3	590- 31	270- 14
Wet Process: Kiln, with Multicyclone & Electrostatic Precipitator	89.3-98.1	24-4.3	12-2.2	1,440- 256	654-116
Wet Process: Kiln, with Baghouse	99.8	.4	.18	21	9.4

E. Control Equipment:

The complications of kiln burning and the large volumes of materials handled have led to the adoption of many control systems for dust collection. Depending upon the emission, the temperature of the effluents from the plant in question, and the particulate emission standards in the community, the cement industry generally uses mechanical collectors, electrical precipitators, baghouses, or combinations of these devices to control emissions. The controlled and uncontrolled emissions from cement manufacture are shown in Table VIII-7.

F. New Source Performance Standards and Regulation Limitations:

New Source Performance Standards (NSPS): On December 23, 1971 EPA promulgated New Source Performance Standards (NSPS) for Portland Cement Plants. The NSPS for the kiln and clinker cooler are as follows:

Kiln - .3 lb/ton feed (.15 kg/M ton feed)
Clinker Cooler - .1 lb/ton feed (.05 kg/M ton feed)

State Regulations for New and Existing Sources: Particulate emission regulations for varying process weight rates are expressed differently from state to state. There are four types of regulations that are applicable to portland cement manufacturing. The four types of regulations are based on:

1. concentration
2. control efficiency
3. gas volume, and
4. process weight

Concentration Basis for Portland Cement: Michigan and New Mexico have regulations specifically for cement kilns, clinker coolers and materials handling operations. The limitations for these states and operations are as follows:

State	Criteria	Limitation
Michigan	wet or dry kiln	0.25 lbs/1000 lbs flue gas
	clinker cooler	0.30 lbs/1000 lbs flue gas
	materials handling	0.15 lbs/1000 lbs flue gas
New Mexico	kiln	230 mg/m^3

Concentration Basis for General Processes: Alaska, Delaware, Washington and New Jersey are representative of states that express particulate emission limitations in terms of grains/standard cubic foot and grains/dry standard cubic foot for general processes. The limitations for these four states are:

Alaska - 0.05 grains/standard cubic foot
Delaware - 0.20 grains/standard cubic foot
Washington - 0.20 grains/dry standard cubic foot
Washington - 0.10 grains/dry standard cubic foot (new)
New Jersey - 0.02 grains/standard cubic foot

Control Efficiency Basis for Portland Cement: Iowa and North Carolina require portland cement industries to maintain 99.7% control over uncontrolled emissions.

Control Efficiency Basis for General Processes: Utah requires industries to maintain 85% control efficiency over uncontrolled emissions.

Gas Volume Basis for General Processes: Texas expresses particulate emission limitations in terms of pounds/hour for specific stack flow rates expressed in actual cubic feet/minute. The Texas limitations for particulates are as follows:

1 - 10,000 acfm - 9.11 lbs/hr
10,000 - 1,000,000 acfm - 38.00 lbs/hr
10^5 - 10^6 acfm - 158.61 lbs/hr

Process Weight Rate Basis for Portland Cement Plants: Several states have regulations specifically for portland cement manufacture. These regulations cover either the entire process or the kiln and cooler separately. The following lists the state, process and limitation for a 60 ton/hour portland cement process:

State	Process	Limitation
Arizona	kiln	18.0 lbs/hr
	clinker cooler	6.0 lbs/hr
Colorado	kiln	18.0 lbs/hr
	clinker cooler	6.0 lbs/hr
Florida	whole process	33.3 lbs/hr
Georgia	kiln	18.0 lbs/hr
	clinker cooler	6.0 lbs/hr
Idaho	kiln (new)	18.0 lbs/hr
	clinker cooler (new)	6.0 lbs/hr
Illinois	whole process	45.9 lbs/hr
New Hampshire	kiln	18.0 lbs/hr
	clinker cooler	6.0 lbs/hr
New York	kiln	18 lbs/hr
	clinker cooler	6.0 lbs/hr
Pennsylvania	kiln	34.8 lbs/hr
	clinker cooler	21.9 lbs/hr
Tennessee	kiln	18.0 lbs/hr
	clinker cooler	6.0 lbs/hr
South Carolina	whole process	42 lbs/hr
Virginia	whole process	46.3 lbs/hr
Wisconsin	kiln	18.0 lbs/hr
	clinker cooler	6.0 lbs/hr

Process Weight Rate Basis for New Sources: Several states have adopted process limitations for sources with a process weight rate of 60 tons/hour. Massachusetts is representative of a most restrictive limitation, 23.1 lbs/hr (10.5 kg/hr) and Maine is representative of a least restrictive limitation, 33.3 lbs/hr (15.1 kg/hr).

Process Weight Rate Basis for Existing Sources: The majority of states express general process limitations in terms of pounds/hr for a wide range of process weight rates. For a 60 ton/hr process Connecticut is representative of a most restrictive limitation, 33.3 lbs/hr (15.1 kg/hr) and Mississippi is representative of a least restrictive limitation, 63.7 lbs/hr (28.9 kg/hr). Table VIII-8 presents controlled and uncontrolled particulate emissions and limitations for portland cement manufacture.

TABLE VIII-8

PARTICULATE EMISSIONS AND LIMITATIONS FROM CEMENT MANUFACTURE

Type of Operation & Control	% Control	(Based on 60 tons/hr) lbs/hr	(Based on 60 tons/hr) kg/hr	NSPS lbs/hr	NSPS kg/hr	Particulate Limitations[a] Portland Cement Plants lbs/hr / kg/hr Col.	Portland Cement Plants lbs/hr / kg/hr PA	New Sources lbs/hr / kg/M ton Mass.	New Sources lbs/hr / kg/M ton Maine	Existing Sources lbs/hr /kg/M ton Conn.	Existing Sources lbs/hr /kg/M ton Miss	85% Cont.
Dry Process Kiln, Uncontrolled	0	14600	6630	18.0	8.2	18.0/8.2	39.8/15.8	23.1/10.5	33.3/15.1	33.3/15.1	63.7/28.9	2190,993
Dry Process: Grinders & Driers, Uncontrolled	0	5720	2600	18.0	8.2	18.0/8.2	39.8/15.8	23.1/10.5	33.3/15.1	33.3/15.1	63.7/28.9	858,389
Wet Process: Kiln Uncontrolled	0	13590	6170	18.0	8.2	18.0/8.2	39.8/15.8	23.1/10.5	33.3/15.1	33.3/15.1	63.7/28.9	2039 925
Wet Process: Grinders & Driers, Uncontrolled	0	954	433	18.0	8.2	18.0/8.2	39.8/15.8	23.1/10.5	33.3/15.1	33.3/15.1	63.7/28.9	143 65
Dry Process: Kiln with Multicyclones	72-89.3	4090-1560	1860-708	18.0	8.2	18.0/8.2	39.8/15.8	23.1/10.5	33.3/15.1	33.3/15.1	63.7/28.9	
Dry Process: Kiln with Electrostatic Precipitator	97.6-99.3	340-101	154-46	18.0	8.2	18.0/8.2	39.8/15.8	23.1/10.5	33.3/15.1	33.3/15.1	63.7/28.9	
Dry Process: Kiln with Multicyclone and Electrostatic Precipitator	68.0-99.7	1750-36	795-16	18.0	8.2	18.0/8.2	39.8/15.8	23.1/10.5	33.3/15.1	33.3/15.1	63.7/28.9	
Dry Process: Kiln with Multicyclone & Baghouse	99.7	42	19	18.0	8.2	18.0/8.2	39.8/15.8	23.1/10.5	33.3/15.1	33.3/15.1	63.7/28.9	
Wet Process: Kiln with Electrostatic Precipitator	95.6-99.7	590-31	270-14	18.0	8.2	18.0/8.2	39.8/15.8	23.1/10.5	33.3/15.1	33.3/15.1	63.7/28.9	
Wet Process: Kiln with Multicyclone & Electrostatic Precipitator	89.3-98.1	1440-256	654-116	18.0	8.2	18.0/8.2	39.8/15.8	23.1/10.5	33.3/15.1	33.3/15.1	63.7/28.9	
Wet Process: Kiln with Baghouse	99.8	21	94	18.0	8.2	18.0/8.2	39.8/15.8	23.1/10.5	33.3/15.1	33.3/15.1	63.7/28.9	

Potential Source Compliance and Emission Limitations: New Source Performance Standards require 99.9% control over uncontrolled dry process kiln emissions. A dry kiln with an efficient baghouse could potentially meet this limitation. All of the states listed in Table VIII-8 will require a baghouse to meet the state regulations, except Utah.

The Environment Reporter was used to update the emissions limitations.

G. References:

The literature used to develop the discussion on cement manufacture is listed below:

(1) Particulate Pollutant System Study, Volume III - Handbook of Emission Properties. Midwest Research Institute. EPA Contract No. CPA 22-69-104. May 1, 1971.

(2) Particulate Pollution Control Equipment Requirements of the Cement Industry. Supplied by EPA, Emission Standards and Engineering Division.

(3) Compilation of Air Pollutant Emission Factors (Second Edition). EPA. Publication No. AP-42. April, 1973.

(4) Analysis of Final State Implementation Plans-Rules and Regulations. EPA, Contract 68-02-0248, July, 1972, Mitre Corporation.

(5) Establishment of National Emission Standards for Stationary Sources, Volume VI. Portland Cement Manufacturing Plants (Final Report). Research Triangle Institute and PEDCo Environmental Specialists, Inc. Contract No. CPA 70-164, Task Order No. 2. September 30, 1970.

(6) Kreichelt, Thomas E., Douglas A. Kemnitz, Stanley T. Cuffee. Atmospheric Emissions from the Manufacture of Portland Cement. U.S. Department of Health, Education, and Welfare. Public Health Services Publication No. 999-AP-17.

Other sources that were consluted but were not directly used in this section included:

(7) Iammartino, Nicholas R. Cement's Changing Scene. Chemical Engineering. June 24, 1974.

(8) Background Information for Proposed New-Source Performance Standards: Steam Generators, Incinerators, Portland Cement Plants, Nitric Acid Plants, Sulfuric Acid Plants. Office of Air Programs Technical Report No. APTC-0711. August, 1971.

(9) Field Operations and Enforcement Manual for Air Pollution Control, Volume II: Control Technology and General Source Inspection. Pacific Environmental Services, Inc. EPA Contract No. CPA 70-122. August, 1972.

(10) Technical Guide for Review and Evaluation of Compliance Schedules for Air Pollution Sources. PEDCo-Environmental Specialists, Inc. EPA Contract No. 68-02-0607. July, 1973.

A. Source Category: VIII Mineral Products Industry

B. Sub Category: Coal Cleaning (Thermal Drying)

C. Source Description:

Thermal drying is the final step in the coal preparation process as shown in the coal cleaning process diagram in Figure VIII-4.(1)213 Thermal drying of coal is done for one or more of the following reasons:

1. To avoid freezing difficulties and to facilitate handling during shipment, storage, and transfer;
2. To maintain high pulverizer capacity;
3. To improve the quality of coal used for coking; and
4. To decrease transportation costs.

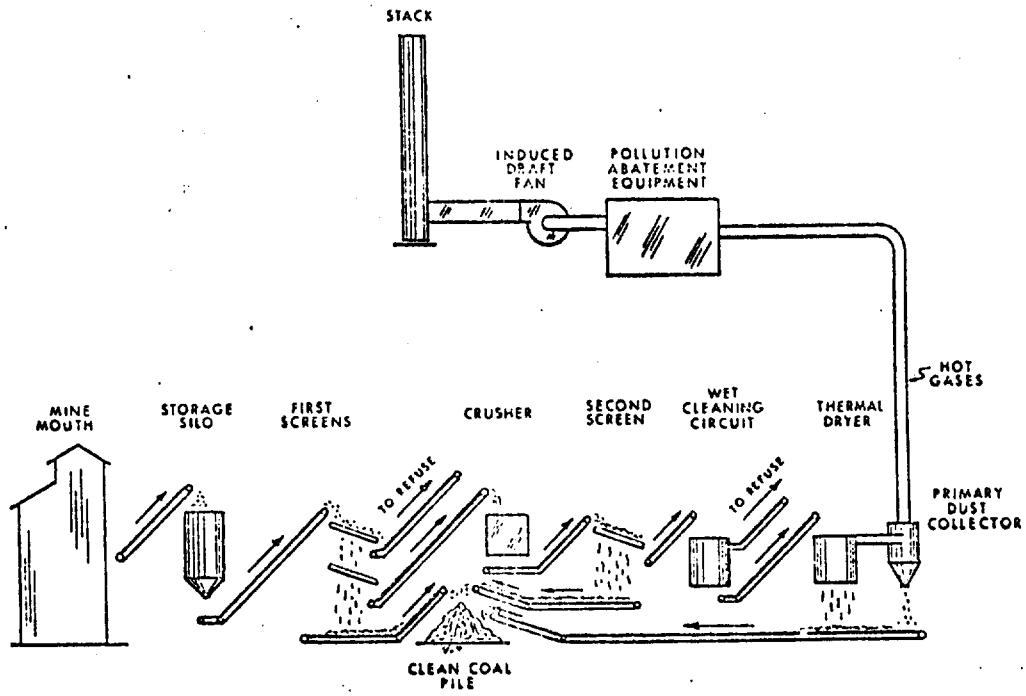

Figure VIII-4: Coal Cleaning Process Flow Diagram

All dryers in use are simply contacting devices in which hot flue gases are air are used to heat the wet coal, evaporate much of the moisture, and transport the water vapor out of the system. There are several different types of thermal dryers employed by the coal-cleaning industry. These include:

1. fluidized bed dryer,
2. suspension or flash dryer,

In the fluidized bed dryer, which is the most popular, the coal is suspended in a fluid state above a perforated plate by a rising column of hot gases, and the dried coal is discharged from the dryer by an overflow weir. The second most widely used dryer in coal processing plants is the flash dryer, wherein hot gases generated by burning fuel in a furnace are used to transport the coal up a riser. Highly turbulent contact of the gases and coal particles brings about excellent drying. Rotary dryers are cylindrical drums in which the coal flows countercurrent to the flow of the hot gases. Screen type dryers carry the coal on reciprocating screens which accomplish evaporation by passing hot gases through the bed. In cascade dryers coal cascades through louvers and comes into contact with hot gases which impart heat for the evaporation of moisture. Schematic drawings of a screen type unit, a flash-drying unit, and a fluidized-bed unit are shown in Figures VIII-5 through VIII-7.(5)450,452,453

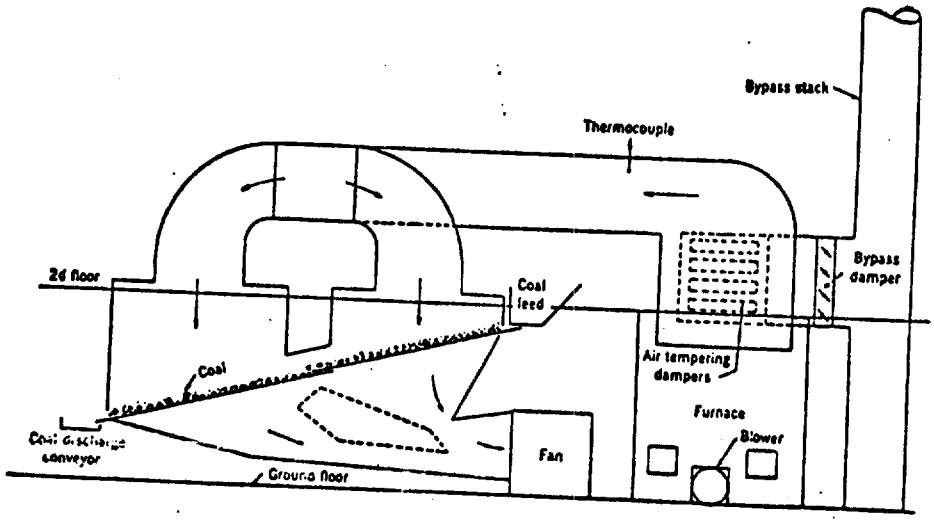

Figure VIII-5-Schematic Sketch of Screen-Type, Thermal Coal-Drying Unit

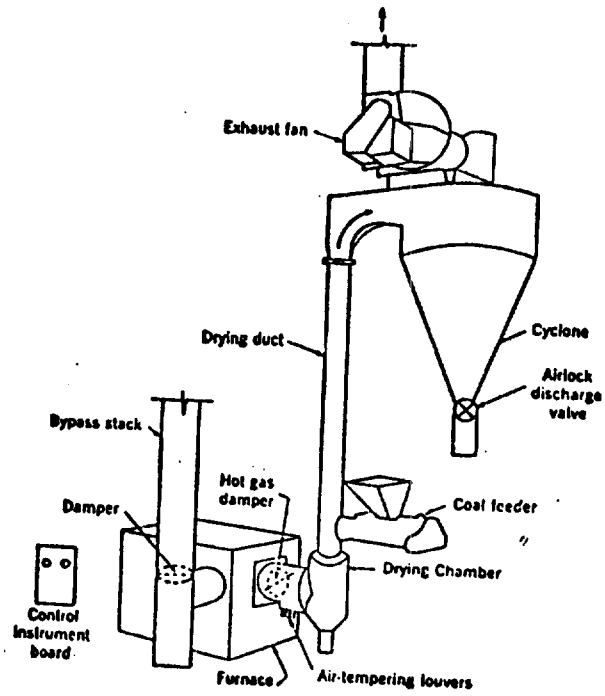

Figure VIII-6- Schematic Drawing Showing Component Parts of Flash-Drying Unit

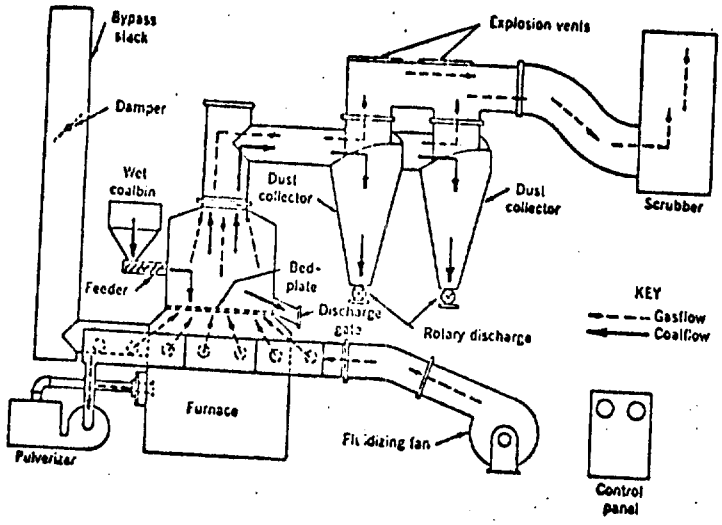

Figure VIII-7-Pressure-Type Fluidized-Bed Thermal Coal Dryer, Showing Component Parts and Flow of Coal and Drying Gases

D. Emission Rates:

The thermal dryers are the largest single source of dust and particulates in coal preparation plants. The crushing, screening, and sizing of coal are minor sources of particulate emissions. Uncontrolled emissions from thermal dryers range from 100 - 300 pounds per ton of coal dried as shown in Table VIII-9. ([3]) All dryers have cyclones included as an integral part of the design and are used to recover the product. Additional controls are often added to reduce air pollution potential, but do not materially affect the recovery of recycleable product.

TABLE VIII-9

PARTICULATE EMISSIONS FROM COAL CLEANING (THERMAL DRYING)

Type of Operation and Controls	% Control	Particulate Emissions (Based on 64 tons/hr)			
		lbs/ton	kg/MT	lbs/hr	kg/hr
Fluidized Bed Dryer, Uncontrolled	0	200 (100-300)	181.	12,800.	5,806.
Fluidized Bed Dryer, Internal Cyclones, Uncontrolled	0	13 (10-25)	11.8	832.	377.
Fluidized Bed Dryer, Internal Cyclones, 10" ΔP Scrubber	98.0	0.25	.23	16.	7.3
Fluidized Bed Dryer, Internal Cyclones, 20" ΔP Scrubber	98.8	0.15	.14	9.6	4.4
Fluidized Bed Dryer, Internal Cyclones, 30" ΔP Scrubber	99.2	0.10	.09	6.4	2.9

E. Control Equipment:

Particulate emissions from thermal dryers are best controlled by a series of cyclones and scrubbers. Cyclone separators eliminate larger particle sizes and recover approximately 70 percent of the product. Multiple cyclones will collect as much as 85 percent of the product. Water sprays following the cyclones will reduce particulate emissions by 95 percent, whereas the use of a wet scrubber following cyclones can reduce the emissions by as much as 99.2 percent. The controlled and uncontrolled emissions are shown in Table VIII-9.

F. New Source Performance Standards and Regulation Limitations:

New Source Performance Standards (NSPS):

On January 15, 1976, EPA promulgated New Source Performance Standards for coal preparation plants. The promulgated standards (Federal Register Jan. 15, 1976) regulate particulate matter emissions from coal preparation and handling facilities processing more 200 tons/day of bituminous coal. The standard requires that emissions from thermal dryers may not exceed 0.070 g/dscm (0.031 gr/dscf) and 20% opacity that emissions from pneumatic coal cleaning equipment may not exceed 0.040 g/dscm (0.018 gr/dscf) and 10% opacity, and [3] emissions from coal handling and storage equipment (processing non-bituminous as well as bituminous coal) may not exceed 20% opacity. For fluidized bed dryers the 0.031 grains/dry standard cubic foot is equivalent to 0.1 lbs/ton of processed coal. [3]

State Regulations for New and Existing Sources: Particulate emission regulations for varying process weight rates are expressed differently from state to state. There are four types of regulations that are applicable to the coal cleaning industry. The four types of regulations are based on:

1. concentration
2. control efficiency
3. gas volume, and
4. process weight

Concentration Basis: Alaska, Delaware, Washington and New Jersey are representative of states that express particulate emission limitations in terms of grains/standard cubic foot and grains/dry standard cubic foot. The limitations for these states are:

Alaska	-	.05 grains/standard cubic foot
Delaware	-	.20 grains/standard cubic foot
Washington	-	.20 grains/dry standard cubic foot
Washington	-	.10 grains/dry standard cubic foot (new)
New Jersey	-	.02 grains/standard cubic foot

Concentration Basis for Coal Cleaning: West Virginia has a regulation specifically for coal cleaning based on standard cubic feet per minute:

West Virginia	-	0.12 grains/standard cubic foot <120,000 cfm
		0.10 grains/standard cubic foot >120,000 cfm <245,000 cfm
		0.08 grains/standard cubic foot >245,000 cfm <500,000 cfm

Control Efficiency Basis: Utah requires the coal preparation industry to maintain 85% control efficiency over uncontrolled coal drying emissions.

Gas Volume Basis: Texas expresses particulate emission limitations in terms of pounds/hour for specific stack flow rates expressed in actual cubic feet per minute. The Texas limitations for particulates are as follows:

1-10,000 acfm - 9.11 lbs/hr
10^4-100,000 acfm - 38.00 lbs.hr
10^5-10^6 acfm - 158.61 lbs/hr

Process Weight Rate Basis for Coal Cleaning: Virginia and Pennsylvania have specific emission limitations for coal drying.dleaning. For the typical plant examined in Section D that produces 560,000 tons/hr on a continuous basis, the Virginia limitation is 45 lbs/hr (20.4 kg/hr). The limitation in Pennsylvania is determined by the following equation:

$A = .76E^{.42}$, where A = Allowable emissions, lbs/hr
E = Emission index = F x W lbs/hr
F = Process factor, lbs/unit
W = Production or charging rate, units/hr

For the typical coal cleaning plant analyzed in Section D, substitution into the equation results with an allowable emission of 5.8 lbs/hr (2.64 kg/hr). Pennslyvania also restricts coal dryer emissions to 0.02 grains/standard cubic foot (≈0.07 lbs/ton for dryers).[3]

Process Weight Rate Basis for New Sources: Several states have adopted process limitations for sources with a process weight rate of 64 tons/hour. Massachusetts is representative of a most restrictive limitation, 23.5 lbs/hr (10.7 kg/hr) and New Hampshire is representative of a least restrictive limitation, 46.9 lbs/hr (21.3 kg/hr).

Process Weight Rate Basis for Existing Sources: The majority of states express general process limitations in terms of pounds/hour for a wide range of process weight rates. For a 64 ton/hour process Colorado is representative of a most restrictive limitation, 33.7 lbs/hr (15.3 kg/hr) and Mississippi is representative of a least restrictive limitation, 66.5 lbs/hr (30.2 kg/hr).

Table VIII-10 presents the relationship between controlled and uncontrolled emissions and limitations.

TABLE VIII-10

PARTICULATE EMISSIONS AND LIMITATIONS FROM COAL CLEANING (THERMAL DRYING)

Type of Operation and Controls	% Control	Particulate Emissions (Based on 64 tons/hour)		Coal Drying			Limitations* lbs/hr/kg/hr				
							General Process Industries				
							New Sources		Existing Sources		
		lbs/hr	kg/hr	PA	NSPS	VA*	MA	NH	Col.	Miss.	With 85% Control
Fluidized Bed Dryer, Uncontrolled	0	12,800.	5806.	5.8/2.6	6.4/2.9	45/20.4	23.5/10.7	46.9/21.3	33.7/15.3	66.5/30.2	—
Fluidized Bed Dryer, Internal Cyclones, Uncontrolled	0	832.	377.	5.8/2.6	6.4/2.9	45/20.4	23.5/10.7	46.9/21.3	33.7/15.3	66.5/30.2	124.8/56.6
Fluidized Bed Dryer, Internal Cyclones, 10" ΔP Scrubber	98.0	16.	7.3	5.8/2.6	6.4/2.9	45/20.4	23.5/10.7	46.9/21.3	33.7/15.3	66,5.30.2	—
Fluidized Bed Dryer, Internal Cyclones, 20" ΔP Scrubber	98.8	9.6	4.4	5.8/2.6	6.4/2.9	45/20.4	23.5/10.7	46.9/21.3	33.7/15.3	66.5/30.2	—
Fluidized Bed Dryer, Internal Cyclones, 30" ΔP Scrubber	99.2	6.4	2.9	5.8/2.6	6.4/2.9	45/20.4	23.5/10.7	46.9/21.3	33.7/15.3	66.5/30.2	—

Potential Source Compliance and Emission Limitations:

Pennsylvania's limitation specifically for coal cleaning requires the scrubber to maintain a 40" ΔP while NSPS require a 30" ΔP.[3]

The Environment Reporter was used to update the emission limitations.

G. References:

The following references were utilized in the development of this section on thermal drying of coal:

(1) Air Pollution Technology and Costs in Nine Selected Areas (Final Report), Industrial Gas Cleaning Insitute, EPA Contract No. 68-02-0301, September 30, 1972.

(2) Background Information for Establishment of National Standards of Performance for New Sources, Coal Cleaning Industry (Draft), Environmental Engineering, Inc. and Herrick Associates, EPA Contract No. CPA 70-142, Task Order No. 7, July 15, 1971.

(3) Memo from Charles B. Sedman, Industrial Studies Branch EPA March 4, 1976.

(4) Analysis of Final State Implementation Plans--Rules and Regulations, EPA, Contract 68-02-0248, July, 1972, Mitre Corporation.

(5) Particulate Pollutant System Study, Volume III--Handbook of Emission Properties, Midwest Research Institute, EPA Contract No. CPA 22-69-104, May, 1971.

(6) Hopper, T.G., Impact of New Source Performance Standards on 1985 National Emissions from Stationary Sources, Volume II (Final Report), TRC-The Research Corporation of New England, EPA Contract No. 68-02-1382, Task No. 3, October, 1975.

Two sources which may contain information relative to thermal drying but which were not directly used in the preparation of this discussion include:

(7) Field Operations and Enforcement Manual for Air Pollution Control, Volume III: Inspection Procedures for Specific Industries, Pacific Environmental Services, Inc., EPA Contract No. CPA 70-122, August, 1972.

(8) Background Information for Standards of Performance: Coal Preparation Plants, Volume I: Proposed Standards, Emissions Standards and Engineering Division, EPA 45-/2-74-02/a, October, 1974.

A. Source Category: VIII Mineral Products Industry

B. Sub Category: Concrete Batching

C. Source Description:

Concrete batching is the process that proportions sand, gravel, and cement by means of weigh hoppers and conveyors into a mixing receiver. There are three types of batching plants in use:

1. Wet-batch plants
2. Central mix plants
3. Dry-mix plants

In wet batch plants, sand, aggregates, and cement are mixed in proper proportions and dropped into a transit mix truck. Water is added simultaneously. In central mix plants, the raw materials are mixed at a central plant and wet concrete is delivered to the job site in open trucks. In dry-mix plants, sand, aggregate, and cement are mixed dry; water is added and the concrete is mixed at the job site. In some cases, the concrete is prepared for on-site building construction work or for the manufacture of concrete products. An average plant will produce 65,320 tons of concrete per year.(1)Concrete Batching

D. Emission Rates:

Particulates are emitted in significant quantities from receiving and conveying of cement, sand, and aggregates, and from load-out of the wet concrete. The particulate emissions consist of cement dust, but some sand and aggregate gravel dust emissions do occur during batching operations.

Factors affecting the emission rate include:

1. Amount and particle size of the materials handled.
2. The type of handling systems used.

Particulate emissions from an uncontrolled plant are approximately 0.2 lbs/cubic yard of concrete.(3)3-191 These emissions are summarized in Table VIII-11.(2)8.10-1

TABLE VIII-11

PARTICULATE EMISSIONS FROM CONCRETE BATCHING

Type of Operation and Controls	% Control	Particulate Emissions (based on 36 tons/hr.)			
		lb/ton	kg/mt	lb/hr	kg/hr
Concrete Batching, Uncontrolled	0	0.1	0.05	3.6	1.67
Concrete Batching, Controlled	90	0.01	0.005	0.4	0.2

*Assumes 8 hr/day x 5 day/week x 45 wk/yr = 1800 hr/yr.

E. Control Equipment:

Control techniques for particulates from concrete batching include:

1. Enclosure of dumping and loading areas
2. Enclosure of conveyors and elevators
3. Filters on storage bin vents
4. Use of water sprays.

Wet scrubbers have encountered operational difficulties such as plugged spray nozzles, corrosion, and waste-water disposal problems. The particulate emissions for a plant with good control are shown in Table VIII-11.

F. New Source Performance Standards and Regulation Limitations:

New Source Performance Standards (NSPS): No NSPS have been promulgated for concrete batching operations.

State Regulations for New and Existing Sources: Particulate emission regulations for varying process weight rates are expressed differently from state to state. There are four types of regulations that are applicable to concrete batching operations. The four types of regulations are based on:

1. concentration
2. control efficiency
3. gas volume
4. process weight.

Concentration Basis: Alaska, Delaware, Washington, New Jersey and Pennsylvania are representative of states that express general process particulate emission limitations in terms of grains/standard cubic foot and grains/dry standard cubic foot. Iowa has a regulation specially for concrete batching and limits the emissions to .1 grains/standard cubic foot. The limitations for the other states are:

Alaska	-	0.05 grains/standard cubic foot
Delaware	-	0.20 grains/standard cubic foot
Washington	-	0.20 grains/dry standard cubic foot
Washington	-	0.10 grains/dry standard cubic foot (new)
Pennsylvania	-	0.04 grains/dry standard cubic foot when gas volume is less than 300,000 dscf
Pennsylvania	-	0.02 grains/dry standard cubic foot when gas
	-	volume exceed 300,000 dscf.
New Jersey	-	0.02 grains/standard cubic foot

Control Efficiency Basis: Connecticut has a regulation that limits emissions from concrete batching to .02 lbs/cubic yard of concrete or 90% of uncontrolled emissions, whichever is lower. Utah's general process weight regulation requires 85% control of uncontrolled emissions.

Gas Volume Basis: Texas expresses particulate emission limitations for general processes in terms of pounds/hour for specific stack flow rates expressed in actual cubic feet per minute. The Texas limitations for particulates are as follows:

1	- 10,000	acfm -	9.11 lbs/hr
.0000	- 100,000	acfm -	38.00 lbs/hr
10^5	- 10^6	acfm -	158.61 lbs/hr

Process Weight Rate Basis for New Sources: Several states have adopted general process regulations for new sources with a process weight rate of 36 tons/hour. Illinois is representative of a most restrictive limitation, 17.2 lbs/hr (7.8 kg/hr) and New Hampshire is representative of a least restrictive limitation, 41.6 lbs/hr (18.9 kg/hr).

Process Weight Rate Basis for Existing Sources: The majority of states express general particulate process limitations in terms of pounds/hour for a wide range of process weight rates. For a process weight rate of 36 tons/hour Colorado is representative of a most restrictive limitation, 30.7 lbs/hr (13.9 kg/hr) and Mississippi is representative of a least restrictive limitation, 45.2 lbs/hr (20.5 kg/hr). Table VIII-12 presents uncontrolled and controlled emissions and limitations from concrete batching operations.

TABLE VIII-12

PARTICULATE EMISSIONS AND LIMITATIONS FROM CONCRETE BATCHING

Type of Operation and Controls	% Control	Particulate Emissions based on 65,320 tons/yr lb/hr	kg/hr	Limitations[4] lb/hr/kg/hr					
				Concrete Batching	General Processes				
					New Sources		Existing Sources		
				CT 90% Control	IL	NH	CO	Miss.	UT 85% Cont.
Concrete Batching, Uncontrolled	0	3.6	1.7	.3	17.2/7.8	41.6/18.9	30.7/13.9	45.2/20.5	0.5/0.3
Concrete Batching, Controlled	90	0.4	0.2	-	17.2/7.8	41.6/18.9	30.7/13.9	45.2/20.5	

Potential Source Compliance and Emission Limitations: Connecticut with a specific regulation for concrete batching, and Utah with a general process requirement are the only two states in which the batching must have control equipment. In all other states uncontrolled concrete batching does not exceed existing limitations.

The Environment Reporter was used to update the emissions limitations.

G. References:

Literature used to develop the information on this section of the Mineral Products Industry (Concrete Batching) is presented below:

1. Hopper, T.G. Impact of New Source Performance Standards on 1985 National Emissions from Stationary Sources, Volume II (Final Report). TRC - The Research Corporation of New England. EPA Contract 68-02-1382, Task #3, October, 1973.

2. Compilation of Air Pollutant Emission Factors (Second Edition). EPA Publication No. AP-42. April, 1973.

3. Technical Guide for Review and Evaluation of Compliance Schedules for Air Pollution Sources. PEDCO-Environmental Specialists, Inc. EPA Contract No. 68-02-0607.

4. Analysis of Final State Implementation Plans - Rules and Regulations, EPA, Contract 68-02-0248, July, 1972, Mitre Corporation.

One reference was found to contain related information but was not utilized in the preparation of the preceding discussion:

5. Services, Inc. EPA Contract No. CPA 70-122. August, 1972.

A. Source Category: VIII Mineral Products Industry

B. Sub Category: Glass Wool Production (Soda Lime)

C. Source Description:

Soda lime is one of five types of glass, but it accounts for 90 percent of all glass produced. At a typical glass plant, glass sand, soda ash, limestone, cullet (broken glass), and minor ingredients are batch weighed, mixed, and charged to the glass furnace.

In the furnace, the dry mixture blends with the molten glass and is held in the molten state at about 2800°F (1538°C) until it acquires the homogeneous character of glass. The batch is then heat conditioned to eliminate stones and cooled to 2200°F (1204°C). While still at a yellow-orange temperature, the glass is drawn from the furnace and worked on forming machines. Figure VIII-8 shows a flow diagram for a soda-lime glass plant.[1]3-168 A typical plant produces 68,000 tons annually.[3]1-3

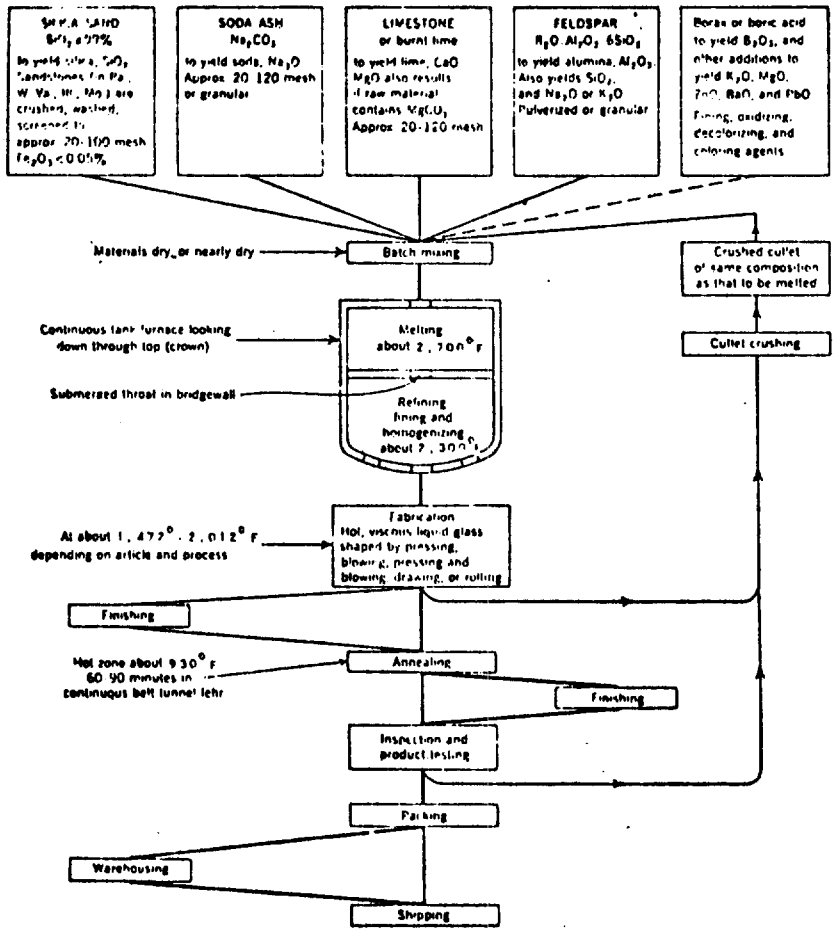

Figure VIII-8: Soda-Lime Glass Manufacture

D. Emission Rates:

Potentially significant sources of atmospheric particulate emissions include:

(1) Raw material handling operations,
(2) Glass furnace,
(3) Forming operations.

Of these, the furnace is usually the major source. The rate of particulate emission is dependent upon the composition of the glass produced, the furnace design, and operating conditions. The emissions result from both the entrainment of batch constituents in the combustion air and from vaporization and subsequent condensation of certain volatile components in the melt. The manufacture of soda lime glasses generally presents less of an emission problem than the production of specialty glasses. Table VIII-13 shows the particulate emission rate from soda-lime plants.(2)8.13-1,(3)3-1

TABLE VIII-13

PARTICULATE EMISSIONS FROM SODA-LIME GLASS MANUFACTURE

Type of Operation & Control	% Control	Particulate Emissions (Based on 68,000 tons/yr)			
		lbs/ton	kg/MT	lbs/hr	kg/hr
Glass Melting, Uncontrolled	0	2	1	15.6	7.08
Glass Melting, with Baghouse	99	0.02	0.01	0.156	0.071
Glass Melting, with Venturi Scrubber	95	0.10	0.05	0.78	0.35

E. Control Equipment:

Fugitive dust emissions from unloading of raw materials can be effectively controlled by use of choked feeding and proper enclosures. Vent filters can be used on bin filling and conveying operations, and weigh hoppers.

Only a few continuously operating control devices are used on the melting furnaces. These include wet scrubbers and baghouses. Because the dust emissions contain particles that are only a few microns in diameter, cyclones and centrifugal scrubbers are not as effective as baghouses in collecting the particulate matter. Table VIII-13 shows the controlled and uncontrolled particulate emissions from soda-lime glass manufacture.

F. New Source Performance Standards and Regulation Limitations:

New Source Performance Standards (NSPS): No New Source Performance Standards have been proposed for soda lime glass manufacture.

State Regulations for New and Existing Sources: Particulate emissions for varying process weight rates are expressed differently from state to state. There are four types of regulations that are applicable to soda lime glass manufacture. The four types of regulations are based on:

1. concentration
2. control efficiency
3. gas volume, and
4. process weight

Concentration Basis: Alaska, Delaware, Washington and New Jersey are representative of states that express particulate emission limitations in terms of grains/standard cubic foot and grains/dry standard cubic foot for general processes. The limitations for these four states are:

Alaska	-	0.05 grains/standard cubic foot
Delaware	-	0.20 grains/standard cubic foot
Washington	-	0.20 grains/dry standard cubic foot
Washington	-	0.10 grains/dry standard cubic foot (new)
New Jersey	-	0.02 grains/standard cubic foot

Control Efficiency Basis: Utah requires general processes to maintain 85% control efficiency over the uncontrolled emissions.

Gas Volume Basis: Texas expresses particulate emission limitations in terms of pounds/hr for specific flow rates expressed in actual cubic feet per minute. The Texas limitations for particulates are as follows:

1	- 10,000	acfm -	9.11 lbs/hr
10,000	- 100,000	acfm -	38.00 lbs/hr
10^5	- 10^6	acfm -	158.60 lbs/hr

Process Weight Rate Basis for New Sources: Several states have adopted general process limitations for new sources with a process weight rate of 7.8 tons/hour. For sources with this process weight rate, Illinois is representative of a most restrictive limitation, 7.6 lbs/hr (3.4 kg/hr) and New Hampshire is representative of a least restrictive limitation, 16.2 lbs/hr (7.3 kg/hr).

Process Weight Rate Basis for Existing Sources: The majority of states express particulate process limitations in terms of pounds/hr for existing sources for a wide range of process weight rates. For sources with a 7.8 ton/hr process weight rate, Colorado is representative of a most restrictive limitation, 12.8 lbs/hr (5.8 kg/hr) and New Hampshire is representative of a least restrictive limitation, 20.0 lbs/hr (9.1 kg/hr).

Table VIII-14 presents controlled and uncontrolled emissions and limitations for soda lime glass manufacture.

TABLE VIII-14

PARTICULATE EMISSIONS AND LIMITATIONS FROM SODA LIME GLASS MANUFACTURE

Type of Operation & Control	% Control	Particulate Emissions (Based on 68,000 tons/yr) lbs/hr	kg/hr	Limitations, lbs/hr/kg/hr: Melting Furnaces Pa.	New Sources Ill.	Calif.	Existing Sources Col.	Nev.	If 85% Control
Glass Melting, Uncontrolled	0	15.6	7.08	9.26/4.2	14.25/6.47	32.2/14.6	18.11/8.22	40.53/18.53	2.34/1.06
Glass Melting, with Baghouse	99	0.156	0.071	9.26/4.2	14.25/6.47	32.2/14.6	18.11/8.22	40.53/18.53	2.34/1.06
Glass Melting, with Venturi Scrubber	95	0.78	0.34	9.26/4.2	14.25/6.47	32.2/14.6	18.11/8.22	40.53/18.53	2.34/1.06

Potential Source Compliance and Emission Limitation: Current and availavle control technology is adequate for soda lime glass manufacture to achieve particulate emission limitations.

The Environment Reporter was used to update the emission limitations.

G. References:

Literature used to develop the material on soda-lime glass manufacturing is listed below:

(1) Technical Guide for Review and Evaluation of Compliance Schedules for Air Pollution Sources, PEDCO - Environmental Specialists, Inc., EPA Contract No. 68-02-0607, July, 1973.

(2) Compilation of Air Pollutant Emission Factors (Second Edition), EPA, Publication No. AP-42, April, 1973.

(3) A Screening Study to Develop Background Information to Determine the Significance of Glass Manufacturing (Final Report), The Research Triangle Institute, EPA Contract No. 68-02-0607, Task 3, December, 1972.

(4) Analysis of Final State Implementation Plans - Rules and Regulations, EPA, Contract 68-02-0248, July, 1972, Mitre Corporation.

A. Source Category: VIII Mineral Products Industry

B. Sub Category: Gypsum

C. Source Description:

Gypsum, naturally-occurring hydrated calcium sulfate, $CaSO_4.2H_2O$, is mined in open pits and underground mines and calcined at nearby plants. The calcination process involves the conversion of gypsum from calcium sulfate dihydrate ($CaSO_4.2H_2O$) to calcium sulfate hemihydrate ($CaSO_4.1/2H_2O$) under controlled temperature conditions. The block flow diagram shown in Figure VIII-9 presents the steps in the process and the composition of the gypsum.(3)15

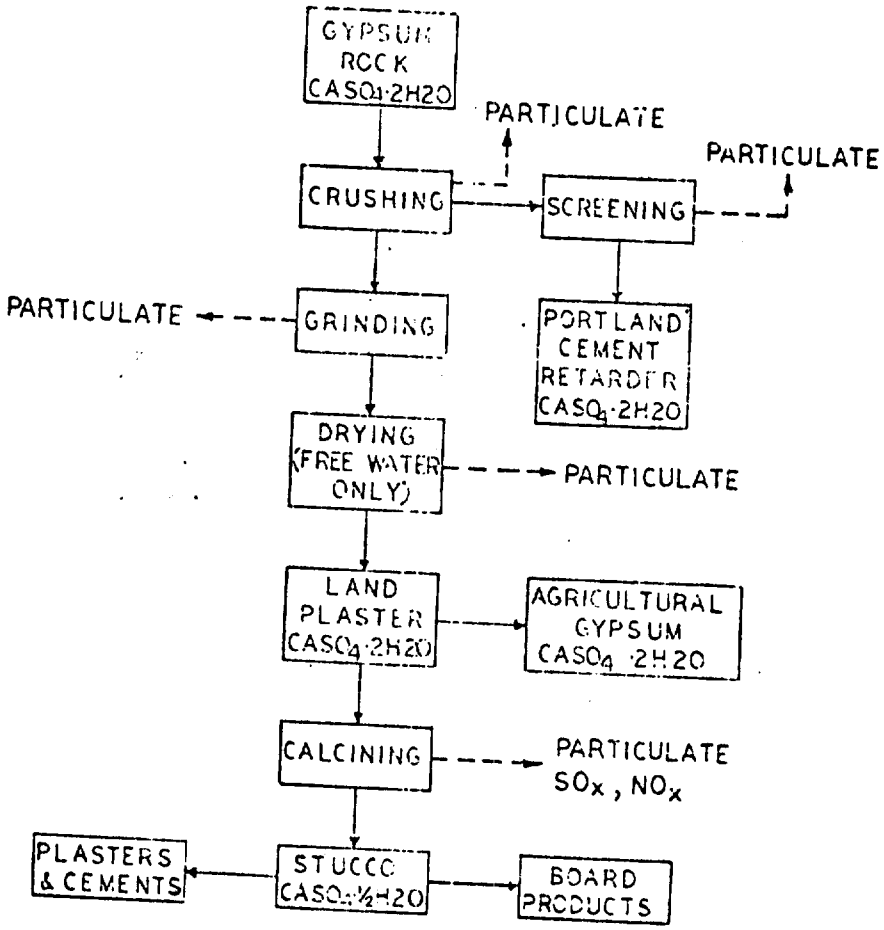

Figure VIII-9: Gypsum Products Flow Diagram

The overall operation is essentially a drying operation in which the raw material is crushed and ground under the influence of hot gases. The dust-laden gases exit to a collector from which the finished product drops to a bin.

A typical calcining plant will process 22.5 tons per hour or 197,100 tons per year.(1)Gypsum

D. Emission Rates:

Calcining gypsum is devoid of particulate air pollutants because it involves only low-temperature removal of the water of hydration. However, the gases created by the release of the water of crystalization carry gypsum rock dust and partially calcined gypsum dust into the atmosphere. Dust emissions do occur from grinding gypsum before calcining and from mixing of calcined gypsum with filler. Table VIII-15 presents the particulate emission rates for gypsum processing.(2)8.14-1

TABLE VIII-15

PARTICULATE EMISSIONS FROM GYPSUM PROCESSING

Type of Operation & Control	% Control	Particulate Emissions (Based on 197,000 tons/yr)			
		lbs/ton	kg/MT	lbs/hr	kg/hr
Raw Material Dryer, Uncontrolled	0	40	20	900	408
Raw Material Dryer, with Fabric Filter	99.5	0.2	0.1	4.5	2.04
Raw Material Dryer, with Cyclone and Electrostatic Precipitator	99.0	0.4	0.2	9.0	4.1
Primary Grinder, Uncontrolled	0	1	0.5	22.5	10.2
Primary Grinder, with Fabric Filter	99.9	0.001	0.0005	0.023	0.010
Primary Grinder, with Cyclone and Electrostatic Precipitator	>99.9	--	--	--	--
Calciner, Uncontrolled	0	90	45	2025	919
Calciner, with Fabric Filter	99.8	0.1	0.05	2.3	1.02
Calciner, with Cyclone and Electrostatic Precipitator	>99.9	--	--	--	--
Conveying, Uncontrolled	0	0.7	0.35	15.8	7.1
Conveying, with Fabric Filter	99.8	0.001	0.0005	0.023	0.010
Conveying, with Cyclone and Electrostatic Precipitator	>99.9	--	--	--	--

E. Control Equipment:

The most common equipment for the collection of particulate matter is the electrostatic precipitator. It is also the most expensive and is used in gypsum plants only when the emissions are too hot to be collected in a baghouse. Cyclone collectors and baghouses are satisfactory, while wet collectors are usually avoided because they convert an air pollution problem to a water pollution problem. Both baghouses and electrostatic precipitators used to collect gypsum dust have efficiencies ranging from 95 to 99 percent.(3)24 The controlled and uncontrolled emissions from gypsum manufacture are shown in Table VIII-15.

F. New Source Performance Standards and Regulation Limitations:

New Source Performance Standards (NSPS): No New Source Performance Standards have been promulgated for gypsum production.

State Regulations for New and Existing Sources: Particulate emission regulations for varying process weight rates are expressed differently from state to state. There are four types of regulations that are applicable to gypsum production. The four types of regulations are based on:

1. concentration,
2. control efficiency,
3. gas volume, and
4. process weight.

Concentration Basis: Alaska, Delaware, Pennsylvania, Washington and New Jersey are representative of states that express particulate emission limitations in terms of grains/standard cubic foot and grains/dry standard cubic foot for general processes. The limitations for these five states are:

Alaska	-	0.05 grains/standard cubic foot
Delaware	-	0.20 grains/standard cubic foot
Pennsylvania	-	0.04 grains/dry standard cubic foot, when gas volume is less than 150,000 dscfm
Pennsylvania	-	0.02 grains/dry standard cubic foot, when gas volumes exceed 300,000 dscfm
Washington	-	0.20 grains/dry standard cubic foot
Washington	-	0.10 grains/dry standard cubic foot (new)
New Jersey	-	0.02 grains/standard cubic foot

New Mexico has a regulation specifically for gypsum plants.

New Mexico	-	690 mg/m^3

Control Efficiency Basis: Utah requires general process industries to maintain 85% control efficiency over the uncontrolled emissions.

Gas Volume Basis: Texas expresses particulate emission limitations in terms of pounds/hour for specific flow rates expressed in actual cubic feet per minute. The Texas limitations for particulates are as follows:

1	-	10,000 acfm	-	9.11 lbs/hr
10,000	-	100,000 acfm	-	38.-- lbs/hr
10^5	-	10^6 acfm	-	158.6 lbs/hr

Process Weight Rate Basis for New Sources: Several states have adopted general process limitations for new sources with a process weight rate of 22.5 tons/hr. For a source with this process weight rate, Illinois is representative of a most restrictive limitation, 13.4 lbs/hr (6.1 kg/hr) and New Hampshire is representative of a least restrictive limitation, 33.0 lbs/hr (15.0 kg/hr).

Process Weight Rate Basis for Existing Sources: The majority of states express particulate emission limitations for existing sources for a wide range of process weight rates. For a process weight rate of 22.5 tons/hr, Colorado is representative of a most restrictive limitation, 24.7 lbs/hr (11.2 kg/hr) and New Hampshire is representative of a least restrictive limitation, 40.7 lbs/hr (18.5 kg/hr).

Table VIII-16 presents the uncontrolled and controlled emissions and limitations from gypsum manufacturing.

TABLE VIII-16

PARTICULATE EMISSIONS AND LIMITATIONS FROM GYPSUM PROCESSING

Type of Operation & Control	% Control	Particulate Emissions (Based on 197,100 tons/hr) lbs/hr	kg/hr	Limitations* lbs/hr/kg/hr New Source Ill.	NH	Existing Sources Col.	NH	UT 85% Control
Raw Material Dryer, Uncontrolled	0	900	400	13.4/6.1	33.0/15.0	24.7/11.2	40.7/18.5	135/61.3
Raw Material Dryer, with Fabric Filter	99.5	4.5	52.04	13.4/6.1	33.0/15.0	24.7/11.2	40.7/18.5	---
Raw Material Dryer, with Cyclone and Electrostatic Precipitator	99.0	9.0	4.1	13.4/6.1	33.0/15.0	24.7/11.2	40.7/18.5	---
Primary Grinder, Uncontrolled	0	22.5	10.2	13.4/6.1	33.0/15.0	24.7/11.2	40.7/18.5	3.38/1.53
Primary Grinder, with Fabric Filter	99.9	0.023	0.010	13.4/6.1	33.0/15.0	24.7/11.2	40.7/18.5	---
Primary Grinder, with Cyclone and Electrostatic Precipitator	>99.9	---	---	13.4/6.1	33.0/15.0	24.7/11.2	40.7/18.5	---
Calciner, Uncontrolled	0	2025	919	13.4/6.1	33.0/15.0	24.7/11.2	40.7/18.5	304/138
Calciner, with Fabric Filter	99.8	2.3	1.02	13.4/6.1	33.0/15.0	24.7/11.2	40.7/18.5	---
Calciner, with Cyclone and Electrostatic Precipitator	>99.9	---	---	13.4/6.1	33.0/15.0	24.7/11.2	40.7/18.5	---
Conveying, Uncontrolled	0	15.8	7.2	13.4/6.1	33.0/15.0	24.7/11.2	40.7/18.5	2.36/1.07
Conveying, with Fabric Filter	99.8	0.023	0.010	13.4/6.1	33.0/15.0	24.7/11.2	40.7/18.5	---
Conveying, with Cyclone and Electrostatic Precipitator	>99.9	---	---	13.4/6.1	33.0/15.0	24.7/11.2	40.7/18.5	---

Potential Source Complaints and Emission Limitations: Current technology is adequate for all processes of gypsum manufacture to be in compliance with even the most restrictive limitations.

Current technology is adequate for all processes of gypsum manufacture to be in compliance with even the most restrictive limitations.

The Environment Reporter was used to update the emissions limitations.

G. References:

Literature used to develop the discussion on gypsum processing is listed below:

(1) Hopper, T.G., Impact of New Source Performance Standards on 1985 National Emissions from Stationary Sources, Volume II (Final Report), TRC - The Research Corporation of New England, EPA Contract 68-02-1382, Task No. 3, October, 1975.

(2) Compilation of Air Pollutant Emission Factors (Second Edition), EPA, Publication No. AP-42, April, 1973.

(3) Screening Study for Background Information and Significant Emissions for Gypsum Product Manufacturing, Process Research, Inc., EPA Contract No. 68-02-0242, Task 14, May, 1973.

(4) Analysis of Final State Implementation Plans--Rules and Regulations, EPA, Contract 68-02-0248, July, 1972, Mitre Corporation.

A. Source Category: VIII Mineral Products Industry

B. Sub Category: Mineral Wool

C. Source Description:

Mineral wool was formerly divided into three broad categories:

1) Slag wool
2) Rock wool
3) Glass wool

At the present time, however, a combination of slag and rock constitutes the cupola charge materials, yielding a product generally classified as mineral wool, as opposed to glass wool.

Mineral wool is made primarily in cupola furnaces charged with blast furnace slag, silica rock, and coke. The charge is heated to a molten state at 3,000°F (1,650°C) and fed to a blow chamber where steam atomizes the molten rock into globules that develop long fibrous tails as they are drawn to the other end of the chamber. A temperature between 150° and 250°F (66° and 121°C) is maintained in the blow chamber. The wool blanket formed is conveyed to an oven to cure the binding agent and then to a cooler. A batting operation normally follows the cooler. The entire mineral wool process is shown schematically in Figure VIII-10.[1]343

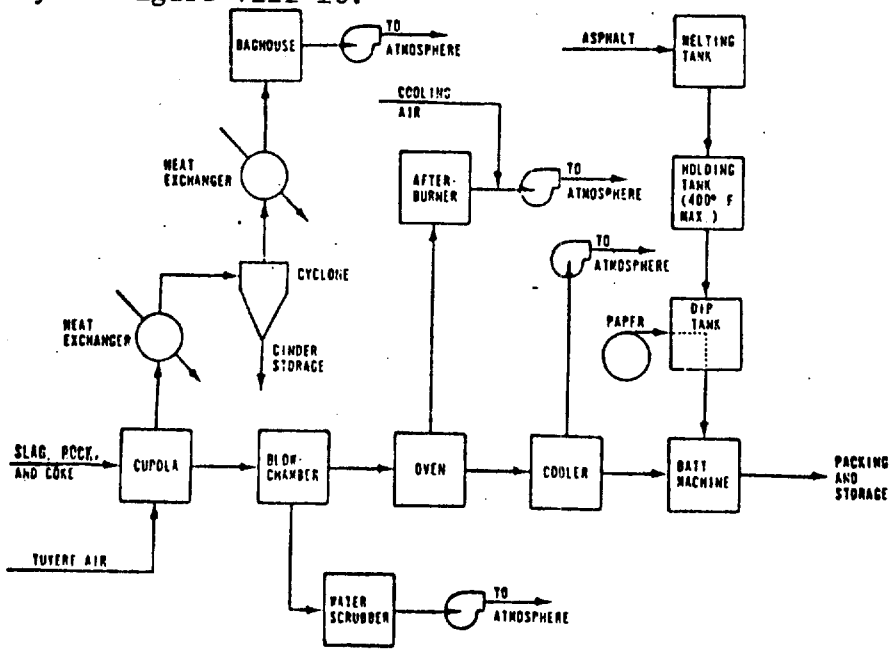

Figure VIII-10: Flow Diagram of Mineral Wool Processing

An average plant processes 2.2 tons of mineral wool per hour, or 19,300 tons annually.[3] Mineral Wool

D. Emission Rates:

The main sources of hydrocarbon emissions from mineral wool processing are:

1) Blowchamber
2) Ovens
3) Cooler

Emissions from the blowchamber consist of fumes, oil vapors, and binding agents as well as wool fibers. The curing ovens emit similar pollutants except that no metallurgical fumes are involved. The hydrocarbon emissions from mineral wool processing are shown in Table VIII-17.(3) Mineral Wool

TABLE VIII-17

HYDROCARBON EMISSIONS FROM MINERAL WOOL PROCESSING

Type of Operation and Control	% Control	*Hydrocarbon Emissions (Based on 19,300 tons/yr.)			
		lb/Ton	kg/MT	lb/hr	kg/hr
Blowchamber, uncontrolled	0	0.987	0.494	2.17	.98
Oven, uncontrolled	0	0.996	0.498	2.19	.99
Cooler, uncontrolled	0	0.041	0.021	0.090	.041
Oven, with catalytic afterburner	53	0.468	0.234	1.030	.47
Oven, with direct-flame afterburner	57	0.428	0.214	0.942	.43

* As HCHO

E. Control Equipment:

Incineration of curing-oven emissions has proved to be a practical method for control of these hydrocarbon emissions.(1)347 Both direct-flame and catalytic afterburners are available, but the former is more satisfactory for use on mineral wool curing ovens. No demonstrated control has yet been shown for the blowchamber or the cooler.(3) Mineral Wool Table VIII-17 shows the controlled and uncontrolled hydrocarbon emissions from a mineral-wool processing plant.

F. New Source Performance Standards and Regulation Limitations:

New Source Performance Standards (NSPS): No New Source Performance Standards have been promulgated for mineral wool manufacture.

State Regulations for New and Existing Sources: Currently, hydrocarbon emission regulations are patterned after Los Angeles Rule 66 and Appendix B type legislation. Organic solvent useage is categorized by three basic types. These are, (1) heating of articles by direct flame or baking with any organic solvent, (2) discharge into the atmosphere of photochemically reactive solvents by devices that employ or apply the solvent, (also includes air or heated drying of articles for the first twelve hours after removal from #1 type device) and (3) discharge into the atmosphere of non-photochemically reactive solvents. For the purposes of Rule 66, reactive solvents are defined as solvents of more than 20% by volume of the following:

1. A combination of hydrocarbons, alcohols, aldehydes, esters, ethers or ketones having an olefinic or cyclo-olefinic type of unsaturation: 5 per cent
2. A combination of aromatic compounds with eight or more carbon atoms to the molecule except ethylbenzene: 8 per cent
3. A combination of ethylbenzene, ketones having branched hydrocarbon structures, trichloroethylene or tolune: 20 per cent

Rule 66 limits emissions of hydrocarbons according to the three process types. These limitations are as follows:

Process	lbs/day &	lbs/hour
1. heated process	15	3
2. unheated photochemically reactive	40	8
3. non-photochemically reactive	3000	450

Appendix B (Federal Register, Vol. 36, No. 158 - Saturday, August 14, 1971) limits the emission of photochemically reactive hydrocarbons to 15 lbs/day and 3 lbs/hr. Reactive solvents can be exempted from the regulation if the solvent is less than 20% of the total volume of a water based solvent. Solvents which have shown to be virtually unreactive are, saturated halogenated hydrocarbons, perchloroethylene, benzene, acetone and c_1-c_5n-paraffins.

For both Appendix B and Rule 66 type legislation, if 85% control has been demonstrated the regulation has been met by the source even if the lbs/day and lbs/hour values have been exceeded. Most states have regulations that limit the emissions from handling and use of organic solvents. Alabama, Connecticut and Ohio have regulations patterned after Los Angeles Rule 66. Indiana and Louisiana have regulations patterned after Appendix B. Some states such as North Carolina have an organic solvent regulation which is patterned after both types of regulations.

Table VIII-18 presents uncontrolled and controlled emissions and limitations for mineral wool manufacture.

TABLE VIII-18

HYDROCARBON EMISSIONS AND LIMITATIONS FROM MINERAL WOOL PROCESSING

Type of Operation and Control	% Control	* Hydrocarbon Emissions (Based on 19,300 tons/yr.)		Limitations* lb/hr/kg/hr			
		lb/hr	kg/hr	Heated		Unheated	
Blowchamber, uncontrolled	0	2.17	.98	3	1.4	8	3.6
Oven, uncontrolled	0	2.19	.99	3	1.4	8	3.6
Cooler, uncontrolled	0	0.090	.041	3	1.4	8	3.6
Oven, with catalytic afterburner	53	1.030	.47	3	1.4	8	3.6
Oven, with direct-flame afterburner	57	0.942	.43	3	1.4	8	3.6

* As HCHO

Potential Source Compliance and Emission Limitations: Hydrocarbon emission limitations are not based on process weight. Mineral wool manufacture is a relatively small emitter, and for the typical 2.2 ton/hour process the hydrocarbon emissions are below the limitations even uncontrolled.

The Environment Reporter was used to update the emission limitations.

G. References:

Literature used to develop the preceding discussion on mineral wool is listed below:

1. Danielson, J. A. Air Pollution Engineering Manual, Second Edition AP-40, Research Triangle Park, North Carolina, EPA, May 1, 1971.

2. Compilation of Air Pollutant Emission Factors (Second Edition). EPA Publication No. AP-42. April, 1973.

3. Hopper, T. G. Impact of New Source Performance Standards on 1985 National Emissions from Stationary Sources, Volume II (Final Report). TRC - The Research Corporation of New England. EPA Contract No.68-02-1382, Task No. 3. October, 1975.

4. Analysis of Final State Implementation Plans - Rules and Regulations, EPA, Contract 68-02-0248, July, 1972, Mitre Corporation.

One reference which could provide relative information on the mineral wool industry is:

5. Preliminary Report 1972 Census of Manufacturers, Industry Series. Washington, D.C. U.S. Department of Commerce.

A. Source Category: VIII Mineral Products Industry

B. Sub Category: Phosphate Rock (Drying)

C. Source Description:

Phosphate rock is found in rich deposits of fluorapatite, with related minerals as impurities. Phosphate rock preparation involves beneficiation to remove these impurities, drying to remove moisture, and grinding to improve reactivity. These processes are shown schematically in Figure VIII-11.(2)3-164

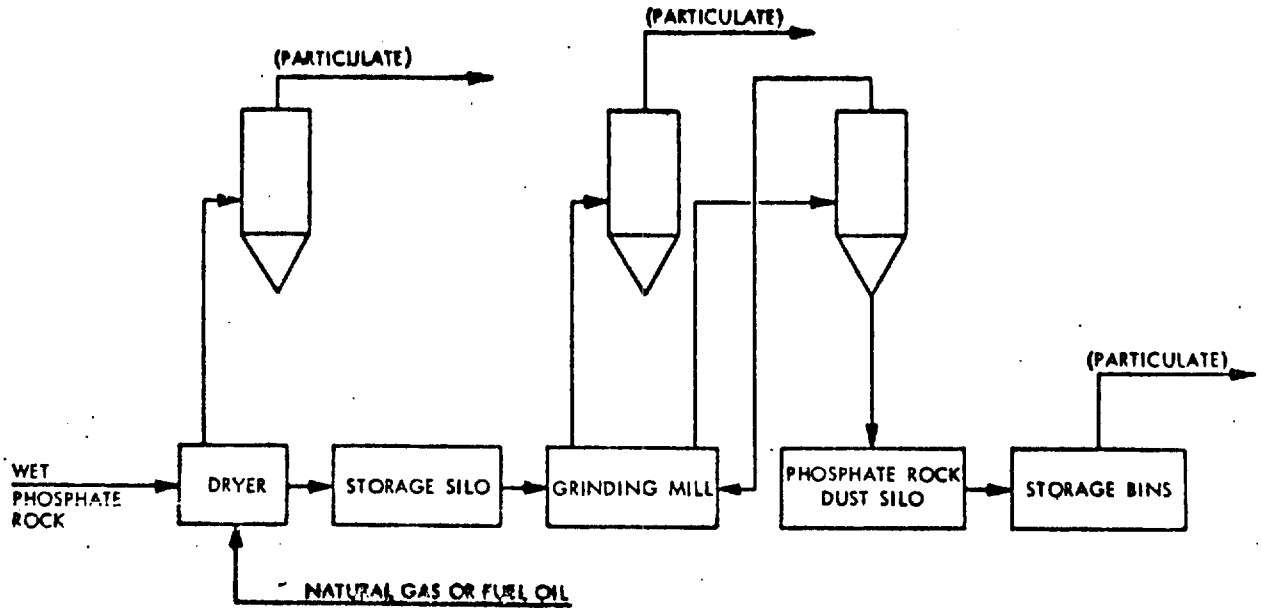

Figure VIII-11: Phosphate rock processing.

Usually direct-fired rotary kilns are used to dry phosphate rock. These dryers burn natural gas or fuel oil and are fired counter-currently.

Approximately 697,000 tons of phosphate rock are dried annually by an average plant in the United States.(3)Phosphate Rock Processing

D. Emission Rates:

The phosphate rock drying operation is a significan[illegible]urce of particulate emissions, which are usually higher when drying pebble [illegible] than when drying concentrate because of the small adherent particles of cla[illegible]d slime on the rock. The uncontrolled emission for the drying operation are s[illegible]wn in Table VIII-19. (1)8.18-1

TABLE VIII-19

PARTICULATE EMISSIONS FROM PHOSPHATE ROCK DRYING

Type of Operation and Control	% Control	Particulate Emissions (based on 697,000 tons/yr)			
		lb/ton	kg/mt	lb/hr	kg/hr
Phosphate Rock Drying, Uncontrolled	0	15	7.5	1193	541
Phosphate Rock Drying, with cyclone and wet scrubber	95-99	0.75-0.15	.375-.075	59.7-11.9	27.1-5.4

E. Control Equipment:

Control of particulate emissions from phosphate rock dryers is accomplished with dry cyclones followed by wet scrubbers. This combination of control equipment is successful in reducing emissions by 95 to 99 percent.(1)8.18-1 The controlled and uncontrolled emissions from phosphate rock drying are presented in Table VIII-19.

F. New Source Performance Standards and Regulation Limitations:

New Source Performance Standards (NSPS): No New Source Performance Standards have been promulgated for phosphate rock drying.

State Regulations for New and Existing Sources: Particulate emission regulations for varying process weight rates are expressed differently from state to state. There are four types of regulations that are applicable to phosphate rock drying. The four types of regulations are based on:

1. concentration,
2. control efficiency,
3. gas volume, and
4. process weight.

Concentration Basis: Alaska, Delaware, Pennsylvania, Washington and New Jersey are representative of states that express particulate emission limitations in terms of grains/standard cubic foot and grains/dry standard cubic foot for general processes. The limitations for these five states are:

Alaska	-	0.05 grains/standard cubic foot
Delaware	-	0.20 grains/standard cubic foot
Pennsylvania	-	0.04 grains/dry standard cubic foot, when gas volume is less than 150,000 dscfm
Pennsylvania	-	0.02 grains/dry standard cubic foot, when gas volumes exceed 300,000 dscfm
Washington	-	0.20 grains/dry standard cubic foot
Washington	-	0.10 grains/dry standard cubic foot (new)
New Jersey	-	0.02 grains/standard cubic foot

Control Efficiency Basis: Utah requires general process industries to maintain 85% control efficiency over uncontrolled emissions.

Gas Volume Basis: Texas expresses particulate emission limitations in terms of pounds/hour for specific stack flow rates expressed in actual cubic feet per minute. The Texas limitations for particulates are as follows:

1	-	10,000 acfm	-	9.11 lbs/hr
10,000	-	100,000 acfm	-	38.00 lbs/hr
10^5	-	10^6 acfm	-	158.6 lbs/hr

Process Weight Rate Basis for New Sources: Several states have adopted particulate emission limitations for new sources with a process weight rate of 79.6 tons/hr. For sources with this process weight rate, Massachusetts is representative of a most restrictive limitation, 24.5 lbs/hr (11.1 kg/hr) and New Hampshire is representative of a least restrictive limitation, 49 lbs/hr (22.2 kg/hr).

Process Weight Rate Basis for Existing Sources: The majority of states express general particulate emission limitations for existing source for a wide range of process weight rates. For a process weight rate of 79.6 tons/hr, Colorado is representative of a most restrictive limitation, 34.9 lbs/hr (15.8 kg/hr) and Mississippi is representative of a least restrictive limitation, 77 lbs/hr (34.9 kg/hr).

Table VIII-20 presents controlled and uncontrolled emissions and limitations from phosphate rock drying.

TABLE VIII-20

PARTICULATE EMISSIONS AND LIMITATIONS FROM PHOSPHATE ROCK DRYING

Type of Operation and Control	% Control	Particulate Emissions (based on 697,000 tons/yr) lb/hr	kg/hr	Limitations[a] lb/hr/kg/hr New Sources Mass	NH	Col.	Existing Sources Miss.	UT 85% Cont.
Phosphate Rock Drying, Uncontrolled	0	1193	541	24.5/11.1	49/22.2	34.9/15.8	77/34.9	179/81.2
Phosphate Rock Drying, with Cyclone and Wet Scrubber	95-99	59.7-11.9	27.1-5.4	24.5/11.1	49/22.2	34.9/15.8	77/34.9	179/81.2

Potential Source Compliance and Emission Limitations: Cyclones and wet scrubbers adequately control phosphate rock drying emissions to within even the most restrictive limitation.

The Environment Reporter was used to update emission limitations.

G. References:

The references used to develop the preceding discussion on phosphate rock drying are listed below:

1. Compilation of Air Pollutant Emission Factors (Second Edition). EPA. Publication No. AP-42. April, 1973.
2. Technical Guide for Review and Evaluation of Compliance Schedules for Air Pollution Sources. PEDCO-Environmental Specialists, Inc. EPA Contract No. 68-02-0607. July, 1973.
3. Hopper. T.G. Impact of New Source Performance Standards on 1985 National Emissions from Stationary Sources, Volume II (Final Report). TRC - The Research Corporation of New England. EPA Contract No. 68-02-1382, Task No. 3. October 24, 1975.

4. Analysis of State Implementation Plans - Rules and Regulations, EPA, Contract 68-02-0248, July, 1972, Mitre Corporation

References which were not directly used for this discussion but which could provide other information on phosphate rock processing include:

5. Emission Standards for the Phosphate Rock Processing Industry. Consulting Division, Chemical Construction Corporation. EPA Contract CPA 70-156. July, 1971.

6. Air Pollution Control Technology and Costs in Seven Selected Areas. Industrial Gas Cleaning Institute. EPA Contract No. 68-02-0289. December, 1973.

A. Source Category: VIII Mineral Products Industry

B. Sub Category: Phosphate Rock (Grinding)

C. Source Description:

Phosphate rock is generally found in rich deposits of fluorapatite, with related materials as impurities. Preparation of phosphate rock involves beneficiation to remove these impurities, drying to remove moisture, and grinding to improve reactivity. These processes are shown schematically in Figure VIII-12.
(2)3-164

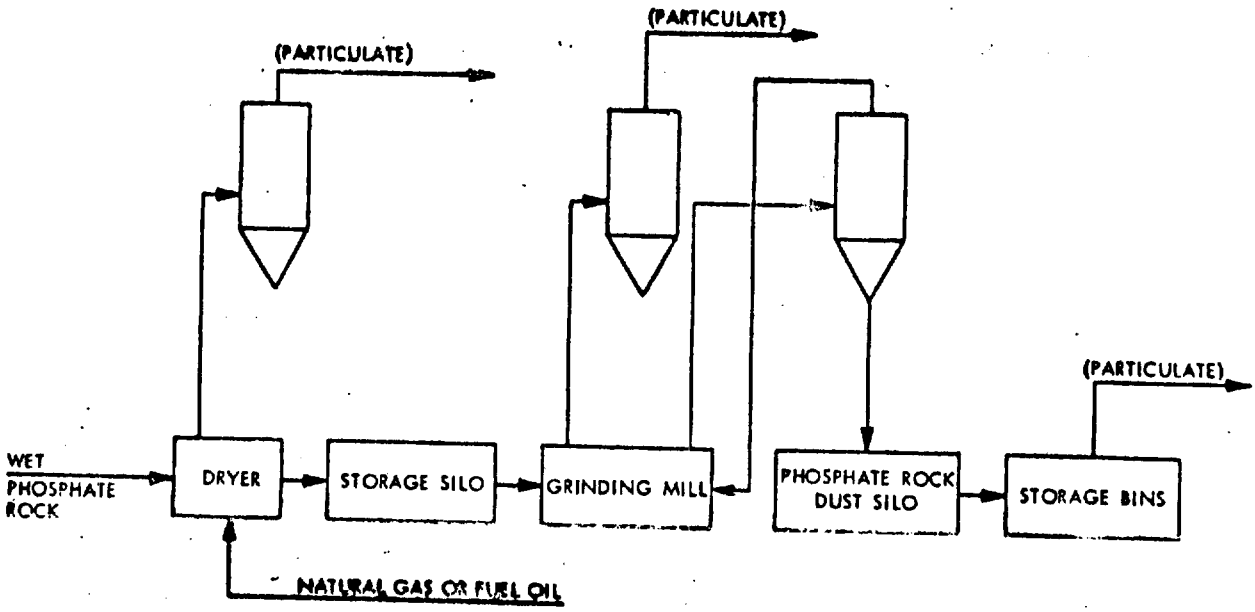

Figure VIII-12: Phosphate Rock Processing

The grinding operation is usually carried out after the drying step using air-swept ball mills to grind the material. The ground rock is then stored in large dust storage silos. Approximately 180,000 tons of phosphate rock are ground by a typical American plant annually.(3)Phosphate Rock Processing

D. Emission Rates:

Phosphate rock grinders can be a significant source of fine particulate emissions. Table VIII-21 presents the level of particulate emissions from phosphate grinding operations.(1)8.18-1,(3)Phosphate Rock Processing

TABLE VIII-21

PARTICULATE EMISSIONS FROM PHOSPHATE ROCK GRINDING

Type of Operation and Controls	% Control	Particulate Emissions (based on 180,000 tons/yr)			
		lb/ton	kg/mt	lb/hr	kg/hr
Phosphate Rock Grinding, Uncontrolled	0	2.0	1.0	41.1	18.6
Phosphate Rock Grinding, with Dry Cyclones and Fabric Filters	99.5-99.9	0.01-.002	.005-.001	.21-.04	0.19-.018

E. Control Equipment:

Control of emissions from phosphate rock grinding is effectively accomplished with baghouse collectors, which are successful in removing the extremely fine particles emitted by the grinders. Combinations of dry cyclones and fabric filters can reduce emissions by 99.5 to 99.9 percent, as shown in Table VIII-19.

F. New Source Performance Standards and Regulation Limitations:

New Source Performance Standards (NSPS): No New Source Performance Standards have been proposed for phosphate rock grinding.

State Regulations for New and Existing Sources: Particulate emission regulations for varying process weight rates are expressed differently from state to state. There are four types of regulations that are applicable to phosphate rock grinding. The four types of regulations are based on:

1. concentration,
2. control efficiency,
3. gas volume, and
4. process weight.

Concentration Basis: Alaska, Delaware, Washington and New Jersey are representative of states that express particulate emission limitations in terms of grains/standard cubic foot and grains/dry standard cubic foot for general processes. The limitations for these four states are:

Alaska	-	0.05 grains/standard cubic foot
Delaware	-	0.20 grains/standard cubicfoot
Washington	-	0.20 grains/dry standard cubic foot
Washington	-	0.10 grains/dry standard cubic foot (new)
New Jersey	-	0.02 grains/standard cubic foot

Control Efficiency Basis: Utah requires general processes to maintain 85% control efficiency over uncontrolled emissions.

Gas Volume Basis: Texas expresses particulate emission limitations in terms of pounds/hour for specific stack flow rates expressed in actual cubic feet per minute. The Texas limitations for particulates are as follows:

1	-	10,000 acfm	-	9.11 lbs/hr
10,000	-	100,000 acfm	-	38.00 lbs/hr
10^5	-	10^6 acfm	-	158.6 lbs/hr

Process Weight Rate Basis for New Sources: Several states have adopted particulate emission limitations for new sources with a process weight rate of 20.5 tons/hr. For sources with this process weight rate, Illinois is representative of a most restrictive limitation, 12.7 lbs/hr (5.8 kg/hr) and New Hampshire is representative of a least restrictive limitation, 31.0 lbs/hr (14.1 kg/hr).

Process Weight Rate Basis for Existing Sources: The majority of states express general particulate emission limitations for a wide variety of process weight rates. For sources with a process weight rate of 20.5 tons/hr, Colorado is representative of a most restrictive limitation, 23.4 lbs/hr (10.6 kg/hr) and New Hampshire is representative of a least restrictive limitation, 38.2 lbs/hr (17.3 kg/hr).

Process Weight Rate Basis for Specific Sources: Pennsylvania has a regulation that applies to general grinding operations. For the size process listed in Section D, the limitation for a 20.5 ton/hr process is 9.5 lbs/hr (4.3 kg/hr).

Table VIII-22 presents the controlled and uncontrolled emissions and limitations for phosphate rock grinding.

TABLE VIII-22

PARTICULATE EMISSIONS AND LIMITATIONS FROM PHOSPHATE ROCK GRINDING

Type of Operation and Controls	% Control	Particulate Emissions based on 180,000 tons/yr		Limitations[4] lb/hr/kg/hr					
				Grinding Operations	General Processes				
					New Sources		Existing Sources		
		lb/hr	kg/hr	Pennsylvania	IL	NH	CO	NH	UT 85% Cont.
Phosphate Rock Grinding, Uncontrolled	0	41.1	18.6	9.5/4.3	12.7/5.8	31.0/14.1	23.4/10.6	38.2/17.3	1.5/10.7
Phosphate Rock Grinding, With Dry Cyclones and Fabric Filters	99.5-99.9	.21-.04	0.10-.018	9.5/4.3	12.7/5.8	31.0/14.1	23.4/10.6	38.2/17.3	1.5/10.7

Potential Source Compliance and Emission Limitations: Dry cyclones and fabric filters currently control phosphate rock grinding operations sufficiently to meet current regulations.

The Environment Reporter was used to update the emissions limitations.

G. References:

1. Compilation of Air Pollutant Emission Factors (Second Edition). EPA Publication No. AP-42. April, 1973.

2. Technical Guide for Review and Evaluation of Compliance Schedules for Air Pollution Sources. PEDCO-Environmental Specialists, Inc. EPA Contract No. 68-02-0607. July, 1973.

3. Hopper, T.G. Impact of New Source Performance Standards on 1985 National Emissions from Stationary Sources, Volume II (Final Report). TRC - The Research Corporation of New England. EPA Contract No. 68-02-1382, Task No. 3. October 24, 1975.

4. Analysis of Final State Implementation Plans - Rules and Regulations, EPA, Contract 68-02-0248, July, 1972, Mitre Corporation.

References which were not directly used for this category discussion but which could provide other information on phosphate rock processing include:

5. Emission Standards for the Phosphate Rock Processing Industry. Consulting Division, Chemical Construction Corporation. EPA Contract No. CPA 70-156. July, 1971.

6. Air Pollution Control Technology and Costs in Seven Selected Areas. Industrial Gas Cleaning Institute. EPA Contract No. 68-02-0289. December, 1973.

A. Source Category: VIII Mineral Products Industry

B. Sub Category: Sand and Gravel Processing

C. Source Description:

Deposits of sand and gravel, the consolidated granular materials resulting from the natural disintegration of rock or stone, are found in banks and pits and in subterranean and subaqueous beds. Depending on the location of the deposit, the raw materials for sand and gravel plants are either dredged or quarried and then transferred to crushing and screening equipment. Power shovels, draglines, cableways, suction dredge pumps, or other apparatus may be used to excavate the materials. Suction pumps, earth movers, barges, and trucks are among the equipment used to transport the materials to the processing plant.

At the processing plant, the material is washed before further processing. Depending on the specific market for which the material is being produced, it is passed through various screens, classifiers, crushers, and then conveyed to storage and loading facilities. The entire process flow is illustrated schematically in Figure VIII-13.

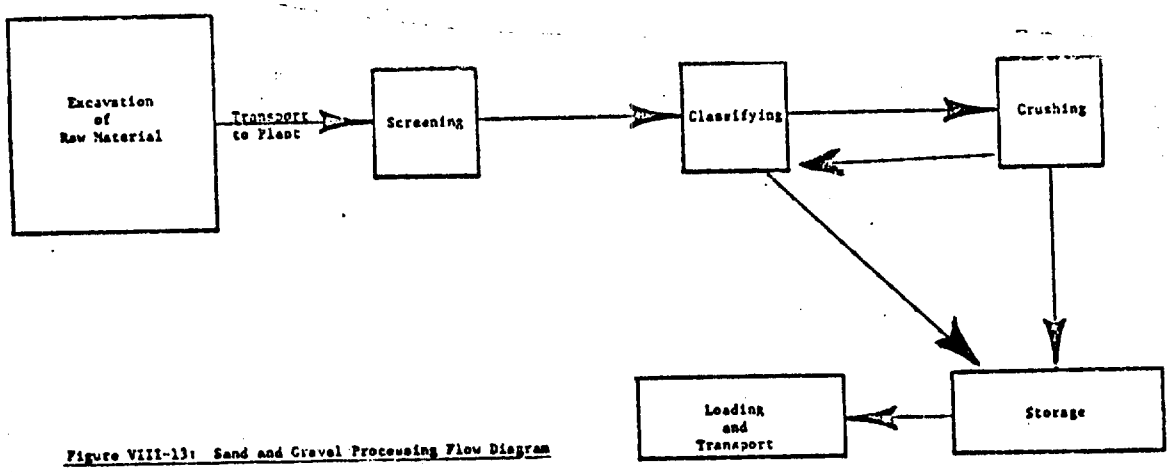

Figure VIII-13: Sand and Gravel Processing Flow Diagram

A typical plant will process 80 tons per hour or 144,000 tons per year.* (1)

*Assumes 8 hrs/day x 5 days/week x 45 weeks/yr = 1800 hours/year.

D. Emission Rates:

Particulate emission sources in sand and gravel processing include:

(1) Conveying,
(2) Screening,
(3) Crushing,
(4) Storage Operations, all of which can generate significant quantities of dust.

Emission rates are affected by:

1. moisture content of processed materials,
2. degree of size reduction required, and
3. type of equipment used for processing.

An additional source of dust is vehicle traffic over unpaved roads or dust-covered paved roads in the vicinity of sand and gravel processing plants. However, this type of emission varies from plant to plant and is not amenable to consistent estimation, so no estimation was made. Table VIII-23 summarizes the particulate emissions from sand and gravel processing.(2)8.19-1

TABLE VIII-23

PARTICULATE EMISSIONS FROM SAND AND GRAVEL PROCESSING

Type of Operation & Control	% Control	Particulate Emissions (Based on 80 tons/hour)			
		lbs/ton	kg/MT	lbs/hr	kg/hr
Sand & Gravel Processing, Uncontrolled	0	0.1	0.05	8.0	3.6
Sand & Gravel Processing, with Baghouse	95	0.005	0.0025	0.4	0.2

E. Control Equipment:

Generally, control devices are not used in the sand and gravel processing plant.(1)Sand and Gravel Processing However, a baghouse could be employed to collect 95 percent of the emissions.(3)342,(1)Sand and Gravel Processing The controlled and uncontrolled emissions are shown in Table VIII-23.

F. New Source Performance Standards and Regulation Limitations:

New Source Performance Standards (NSPS): No New Source Performance Standards have been promulgated for sand and gravel processing.

State Regulations for New and Existing Sources: Particulate emission regulations for varying process weight rates are expressed differently from state to state. There are four types of regulations that are applicable to sand and gravel processing. The four types of regulations are based on:

1. concentration,
2. control efficiency,
3. gas volume, and
4. process weight.

Concentration Basis: Alaska, Delaware, Washington and New Jersey are representative of states that express particulate emission limitations in terms of grains/standard cubic foot and grains/dry standard cubic foot for general processes. The limitations for these four states are:

Alaska	-	0.05 grains/standard cubic foot
Delaware	-	0.20 grains/standard cubic foot
Washington	-	0.20 grains/dry standard cubic foot
Washington	-	0.10 grains/dry standard cubic foot (new)
New Jersey	-	0.02 grains/standard cubic foot

Control Efficiency Basis: Utah requires general process industries to maintain 85% control efficiency over uncontrolled emissions.

Gas Volume Basis: Texas expresses particulate emission limitations in terms of lbs/hr for specific stack flow rates expressed in actual cubic feet per minute. The Texas limitations are:

$1 - 10^4$	acfm -	9.11 lbs/hr
$10^4 - 10^5$	acfm -	38.00 lbs/hr
$10^5 - 10^6$	acfm -	158.61 lbs/hr

Process Weight Rate Basis for New Sources: Several states have adopted particulate emission limitations for new sources with a process weight rate of 80 tons/hr. For sources with this process weight rate, Massachusetts is representative of a most restrictive limitation, 24.5 lbs/hr (11.1 kg/hr) and New Hampshire is representative of a least restrictive limitation, 49.0 lbs/hr (22.2 kg/hr).

Process Weight Rate Basis for Existing Sources: The majority of states express particulate process limitations for existing sources in terms of pounds/hr for a wide range of process weight rates. For sources with a process weight rate of 80 tons/hr, Colorado is representative of a most restrictive limitation, 34.9 lbs/hr (15.8 kg/hr) and Mississippi is representative of a least restrictive limitation, 77 lbs/hr (34.9 kg/hr).

Process Weight Rate Basis for Specific Sources: Pennsylvania has a general limitation for screening, crushing and grinding operations. For a 80 ton/hr process, the particulate limitations is 9.5 lbs/hr (4.3 kg/hr). Table VIII-24 presents uncontrolled and controlled emissions and limitations for sand and gravel processing.

TABLE VIII-24

PARTICULATE EMISSIONS AND LIMITATIONS FROM SAND AND GRAVEL PROCESSING

Type of Operation & Control	% Control	Particulate Emissions (Based on 80 tons/hour)		Limitations[4] lbs/hr/kg/hr					
				Processing Operations	General Processes				
					New Sources		Existing Sources		
		lbs/hr	kg/hr	Penn.	Mass.	NH	Col.	Miss.	UT 85% Control
Sand & Gravel Processing, Uncontrolled	0	8.0	3.6	9.5/4.3	24.5/11.1	49.0/22.2	34.9/15.8	77/34.9	0.29/0.13
Sand & Gravel Processing, with Baghouse	95	0.4	0.2	9.5/4.3	24.5/11.1	49.0/22.2	34.9/15.8	77/34.9	0.29/0.13

Potential Source Compliance and Emission Limitations: Sand and gravel processing, even uncontrolled, often meet even the most restrictive emission limitations. Unless the fugitive aspects of a particular plant cause a problem, this industry does not rely on extraordinary control measures to maintain compliance.

The Environment Reporter was used to update emission limitations.

G. References:

Literature used to develop the material in this section is listed below:

(1) Hopper, T.G., Impact of New Source Performance Standards on 1985 National Emissions from Stationary Sources, Volume II, (Final Report), TRC - The Research Corporation of New England, EPA Contract No. 68-02-1382, Task #3, October 24, 1975.

(2) Compilation of Air Pollutant Emission Factors (Second Edition), EPA Publication No. AP-42, April, 1973.

(3) Danielson, J.A., Air Pollution Engineering Manual, Second Edition, AP-40, Research Triangle Park, North Carolina, EPA, May, 1973.

(4) Analysis of Final State Implementation Plans--Rules and Regulations, EPA, Contract 68-02-0248, July, 1972, Mitre Corporation.

A. Source Category: VIII Mineral Products Industry

B. Sub Category: Stone Quarrying

C. Source Description:

Raw materials for the manufacture of rock and crushed stone products are obtained from deposit beds in quarries by drilling and blasting. Open quarries account for 95 percent of production, but underground quarries are becoming more common. Secondary breakage is accomplished by mechanical drop hammers rather than by additional blasting. Primary crushing is often done at or near the quarry by jaw crushers and gyratories.

The material is moved to processing plants by use of heavy earth-moving equipment for processing, including crushing, regrinding, screening, and removal of fines. Extensive use is made of belt conveyors for materials transfer between various processing operations. In some of the larger, more efficient plants the stone is drawn out from tunnels under the storage piles. The equipment is designed to blend the materials as necessary. Figure VIII-14 shows a flow diagram for stone processing.(1)V-III-62

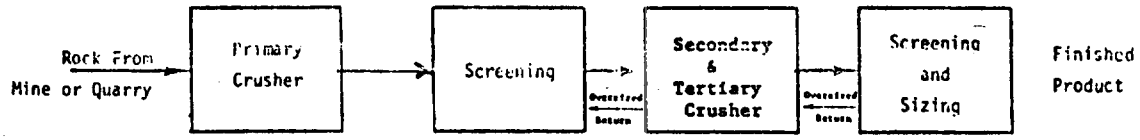

Figure VIII-14: Flow Diagram for Rock Processing

A typical plant processes 300 tons per hour or 540,000 tons* annually. (2)Stone Quarrying and Processing

*Assumes 8 hr/day x 5 days/week x 45 weeks/yr. = 1,800 hrs/yr.

D. Emission Rates:

All stone quarrying and processing operations are potential dust emission sources. These include:

(1) Blasting,
(2) Handling,
(3) Crushing,
(4) Screening,
(5) Conveying,
(6) Loading and transporting,
(7) Storing.

Stone quarrying by its very nature is a highly visible fugitive oriented process. The blasting, handling, conveying, loading, transporting and storage are all potential fugitive emitters. As such these sources of particulate emissions vary from plant to plant depending on plant layout and housekeeping facilities. For this section, however only point source emissions were estimated.

Factors affecting point source emissions include:

(1) The amount and type of rock processed,
(2) The method of transfer of the rock,
(3) The moisture content of the raw material,
(4) Type of equipment used,
(5) The degree of enclosure of the transferring, processing, and storage areas, and
(6) The degree to which control equipment is used on the process,
(7) Meteorological conditions,
(8) Size reduction performed.

Table VIII-25 shows the emissions from stone handling processes.[4]

TABLE VIII-25

PARTICULATE EMISSIONS FROM STONE QUARRYING AND PROCESSING

Type of Operation and Controls	% Control	Particulate Emissions (Based on 300 tons/hr)			
		lbs/ton	kg/MT	lbs/hr	kg/hr
Primary Crushing, Uncontrolled	0	0.5	0.25	150.	68.0
Secondary Crushing and Screening, Uncontrolled	0	1.5	0.74	450.	204.
Tertiary Crushing and Screening, Uncontrolled	0	6	3	1800.	816.
Recrushing and Screening, Uncontrolled *	0	1	5	300.	136.
Fines Mill, Uncontrolled	0	6	3	1800.	816.
Screening, Conveying and Handling	0	2	1	600.	272.
Storage Piles, Uncontrolled	0	10	5	969.	440.
Primary Crushing with Fabric Filter	99	0.005	0.0025	1.5	0.7
Secondary Crushing and Screening, with Fabric Filter	99	0.015	0.0075	4.5	2.0
Tertiary Crushing and Screening with Fabric Filter	99	0.06	0.03	18.	8.2
Recrushing and Screening with Fabric Filter	99	0.05	0.025	15.	6.8
Fines Mill with Fabric Filter	99	0.06	0.03	18.	8.2
Screening, Conveying and Handling with Fabric Filter	99	0.02	0.01	6.	2.7
Enclosed Storage Piles	99	0.10	0.05	30.	13.6

*Includes, 20% of stone recrushed

E. Control Equipment:

Dry collection of emissions is preferable where fines are marketable. Dust emissions from some processing steps are suppressed by wetting the materials. Where collected dust is salable, ventilation to a baghouse will reduce emissions by 99 percent.[3]7 Wet scrubbers would achieve similar results, but cyclones would only be 80 percent efficient. There is no indication that electrostatic precipitators are used in the industry. The controlled and uncontrolled emissions from stone quarrying and processing are shown in Table VIII-25.

F. New Source Performance Standards and Regulation Limitations:

New Source Performance Standards (NSPS): No new source performance standards have been promulgated for the stone quarry industry.

State Regulations for New and Existing Sources: Particulate emission regulations for varying process weight rates are expressed differently from state to state. There are four types of regulations that are applicable to stone quarries. The four types of regulations are based on:

1. concentration,
2. control efficiency,
3. gas volume, and
4. process weight.

Concentration Basis: Alaska, Delaware, Washington, New Jersey and Pennsylvania are representative of states that express particulate emission limitations in terms of grains/standard cubic feet and grains/dry standard cubic feet. The limitations for these states are:

Alaska	-	0.05 grains/standard cubic foot
Delaware	-	0.20 grains/standard cubic foot
Washington	-	0.20 grains/dry standard cubic foot
Washington	-	0.10 grains/dry standard cubic foot (new)
New Jersey	-	0.02 grains/dry standard cubic foot
Pennsylvania	-	0.02 grains/standard cubic foot gas volume >300,000 scfm
Pennsylvania	-	0.04 grains/standard cubic foot, gas volume <300,000 scfm

Control Efficiency Basis: Utah requires general process industries to maintain 85% control efficiency over uncontrolled emissions.

Gas Volume Basis: Texas expresses particulate emission limitations in terms of pounds/hour for specific stack flow rates expressed in actual cubic feet per minute. The Texas limitations for particulates are as follows:

1	- 10,000	acfm -	9.11 lbs/hr
10,000	- 100,000	acfm -	38.00 lbs/hr
10^5	- 10^6	acfm -	158.60 lbs/hr

Process Weight Rate Basis for New Sources: Several states have adopted particulate emission limitations for new sources with a process weight rate of 300 tons/hour. For sources with this process weight rate, Massachusetts is representative of a most restrictive limitation, 31.5 lbs/hr (14.3 kg/hr) and New Hampshire is representative of a least restrictive limitation, 63.0 lbs/hr (28.6 kg/hr).

Process Weight Rate Basis for Existing Sources: The majority of states express particulate emission limitations for existing sources for a wide range of process weight rates. For sources with a process weight rate of 300 tons/hr, Colorado is representative of a most restrictive limitation, 43.1 lbs/hr (19.5 kg/hr) and Mississippi is representative of a least restrictrive limitation, 177 lbs/hr (80.3 kg/hr).

Table VIII-26 presents the uncontrolled and controlled emissions and limitations for stone quarrying.

TABLE VIII-26

PARTICULATE EMISSIONS AND LIMITATIONS FROM STONE QUARRYING AND PROCESSING

Type of Operation and Controls	% Control	Particulate Emissions (Based on 300 tons/hr) lbs/hr	kg/hr	Limitations[5] lbs/hr/kg/hr Crushing Operations PA	General Processes New Sources MA	NH	Existing Sources Col.	Miss/	UT 85% Control
Primary Crushing, Uncontrolled	0	150.	68.0	18.3 /8.3	31.5/14.3	63.0/28.6	43.1/19.5	177/80.3	7.3 /3.3
Secondary Crushing and Screening, Uncontrolled	0	450.	204.	18.3 /8.3	31.5/14.3	63.0/28.6	43.1/19.5	177/80.3	21.8/9.9
Tertiary Crushing and Screening, Uncontrolled	0	1800.	816.	18.3 /8.3	31.5/14.3	63.0/28.6	43.1/19.5	177/80.3	87.2/39.6
Recrushing and Screening, Uncontrolled	0	300.	136.	18.3 /8.3	31.5/14.3	63.0/28.6	43.1/19.5	177/80.3	72.7/33.0
Fines Mill, Uncontrolled	0	1800.	816.	18.3 /8.3	31.5/14.3	63.0/28.6	43.1/19.5	177/80.3	87.2/39.6
Screening, Conveying and Handling	0	600.	272.	18.3 /8.3	31.5/14.3	63.0/28.6	43.1/19.5	177/80.3	29.1/13.2
Storage Piles, Uncontrolled	0	969.	440.	18.3 /8.3	31.5/14.3	63.0/28.6	43.1/19.5	177/80.3	145. /66.0
Primary Crushing with Fabric Filter	99	1.5	0.7	18.3 /8.3	31.5/14.3	63.0/28.6	43.1/19.5	177/80.3	---
Secondary Crushing and Screening with Fabric Filter	99	4.5	2.0	18.3 /8.3	31.5/14.3	63.0/28.6	43.1/19.5	177/80.3	---
Tertiary Crushing and Screening with Fabric Filter	99	18.	8.2	18.3 /8.3	31.5/14.3	63.0/28.6	43.1/19.5	177/80.3	---
Recrushing and Screening with Fabric Filter	99	15.	6.8	18.3 /8.3	31.5/14.3	63.0/28.6	43.1/19.5	177/80.3	---
Fines Mill with Fabric Filter	99	18.	8.2	18.3 /8.3	31.5/14.3	63.0/28.6	43.1/19.5	177/80.3	---
Screening, Conveying and Handling with Fabric Filter	99	6.	2.7	18.3 /8.3	31.5/14.3	63.0/28.6	43.1/19.5	177/80.3	---
Enclosed Storage Piles	99	30.	13.6	18.3 /8.3	31.5/14.3	63.0/28.6	43.1/19.5	177/80.3	---

Potential Source Compliance and Emission Limitations: Fabric filters and scrubbers are possible control measures to reduce particulate emissions from stone quarrying operations below the most restrictive limitations.

The Environment Reporter was used to update emissions limitations.

G. References:

The literature used to develop the preceding discussion on stone quarrying and processing is listed below:

(1) Hopper, T.G., Impact of New Source Performance Standards on 1985 National Emissions from Stationary Sources, Volume II, (Final Report), TRC - The Research Corporation of New England, EPA Contract No. 68-02-1382, Task #3, October, 1974.

(2) Exhaust Gases from Combustion and Industrial Processes, Engineering Science, Inc., EPA Contract No. EHSD 71-36, October 2, 1971.

(3) Background Information for Stationary Source Categories, Provided by EPA, Joseph J. Sableski, Chief, Industrial Studies Branch, November 3, 1972.

(4) Compilation of Air Pollutant Emission Factors, (Second Edition), EPA Publication No. AP-42, April, 1973.

(5) Analysis of Final State Implementation Plans-Rules and Regulations, EPA, Contract 68-02-0248, July, 1972, Mitre Corporation.

One source was not directly used to develop this section, but could provide useful information regarding pollution control equipment that is used in stone quarrying and processing operations.

(6) Danielson, J.A., Air Pollution Engineering Manual, (Second Edition), AP-40, Research Triangle Park, North Carolina, EPA, May, 1973.

A. Source Category: IX Petroleum Industry

B. Sub Category: Petroleum Refining, Fluid Catalytic Cracking Unit (FCCU)

C. Source Description:

Petroleum refineries process crude oil to produce a variety of porducts, most of which are fuel. These products are differentiated from each other chiefly by their boiling temperature range. Those fuels boiling at temperatures in the gasoline range (200-400°F) (93-204°C) and below command premium prices. Kerosene (350°-550°F) (177°C-288°C), and distillate fuels (450-600°F) (232°C-316°C) are desirable for jet and diesel fuels as well as for heating purposes. Those materials above 600°F (316°C) are generally undesirable products, and one objective of refinery operations is to minimize them. Fluid Catalytic Cracking is the principal process used to convert high boiling point hydrocarbons into more valuable lower boiling point material.[1]83

Fluid Catalytic Cracking Units consist of a reactor, a regenerator, and a product separation unit as shown in Figure IX-1.[2][18] Fresh feed and recycled feed are charged separately or as a combined feed to the reactor section. The feed is commingled with hot regenerated catalyst in the reactor where the catalyst-hydrocarbon vapor mixture is maintained as a fluidized bed. The combination of catalyst, temperature, and time cause the hydrocarbon to undergo a cracking reaction which produce products of lower boiling point than the charge stock.

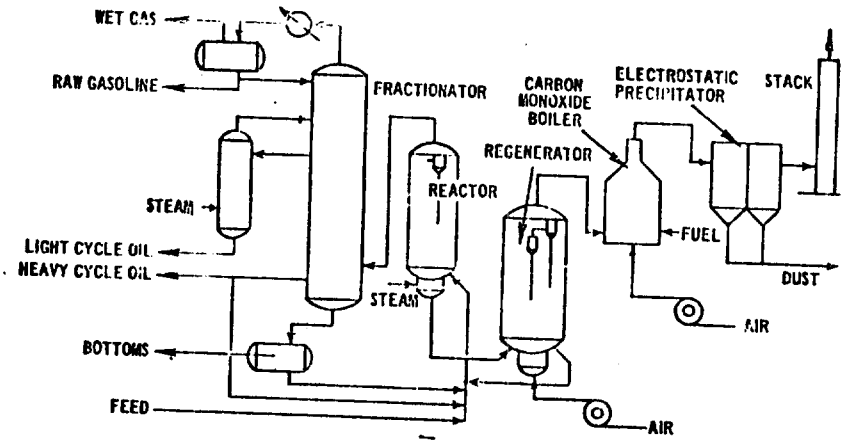

Figure IX-1: Fluid Catalytic Cracking Unit

A fraction of the combined feed is converted into by-products heavier than the feed stock, which will not vaporize or leave the surface of the catalyst. The carbonaceous residue on the catalyst is called coke. A portion of the fluidized catalyst containing deposits of tar and polymers flows by gravity through a steam stripper where volatiles are removed prior to reintroduction to the regenerator. The cracked components are passed through stage cyclone separators to remove entrained catalyst and then charged to fractionation equipment. The volatile matter and much of the steam goes back into the reactor with fresh feed stock. The coked catalyst bed in the regenerator is contacted with air to burn coke deposits from the catalyst. The hot regenerated catalyst is then reintroduced to the reactor.

The catalysts used in FCC units are fine powders of synthetic or natural materials of silica-alumina composition. Recently the use of "molecular sieve type" catalyst has grown substantially due to improved activity and stability. The sieve catalysts are synthetic aluminosilicates processed to give special crystalline structures.[1] 85-96

D. Emission Rates:

Particulate emissions from FCC units arise primarily from the exhaust of the regenerators and the carbon monoxide boilers if so equipped. Beside the products of combustion from the coking of the catalyst, there is actual loss of the catalyst itself. Fluid Catalytic Cracking Units normally range in size from 20,000 bbl/day (2380 m^3/day) to 150,000 bbl/day (17850 m^3/day) of feed stock. Data for a 40,000 bbl/day (4760 m^3/day)[1] 94 refinery is representative for units found at smaller independent refineries includes the following:

Feed Rate:

Fresh Feed 40,000 bbl/day, 6400 m^3/day
Recycle Feed 10,000 bbl/day, 1600 m^3/day
Total Feed 50,000 bbl/day, 8000 m^3/day
Catalyst Circulation Rate 2,100 tons/hour, 1,905 M tons/hour
Carbon Burning Rate 34,000 lbs/hour, 15,400 kg/hr
Flue Gas SCFM 83,000 SCFM (without CO boiler)
115,000 SCFM (with CO boiler)

Table IX-1 summarizes the emissions from FCC units with and without control.

TABLE IX-1

PARTICULATE EMISSIONS FROM FLUID CATALYTIC CRACKING UNITS

Type of Operation and Control	% Control	Emission Rates (Based on 40,000 bbl/day)			
		lbs/hr	kg/hr	kg/bbl	g/m³
Fluid Catalytic Cracking Unit with 2 stages of internal cyclones	0	350	159	0.35	0.80
Fluid Catalytic Cracking Unit with 2 stages of internal cyclones and CO boiler	0	250	113	0.25	0.57
Fluid Catalytic Cracking Unit with 2 stages of internal cyclones and electrostatic precipitator	82	65	29	0.065	0.15
	92	30	14	0.030	0.069
Fluid Catalytic Cracking Unit with 2 stages of internal cyclones and CO boiler and electrostatic precipitator	82	45	20	0.045	0.10
	92	20	9	0.020	0.045

The emissions listed in Table IX-1 are estimates based on estimates provided by EPA. Emissions from a single unit can vary from day to day depending upon the catalyst, the condition of the catalyst and the quality of the crude. [3]

E. Control Equipment:

Fluid Catalytic Cracking Units ordinarily require particulate collection equipment to achieve acceptable emissions and reasonable recovery of the catalyst. Fluid Catalytic Cracking Units usually have two stage internal cyclones. Over the 18-24 month operation period the effectiveness of these cyclones deteriorates substantially due to erosion and the emissions increase. External cyclones will reduce

particulate emissions and produce relatively clear stacks on small units. Larger units require electrostatic precipitators to provide high particulate removal efficiencies. Precipitators can be installed either ahead of or after the CO boiler on FCC units. With the precipitator installation ahead of the CO boiler a flue gas heat exchanger is necessary to reduce the gas temperature entering the precipitator. Also, the gas volume, temperature and resistivity of the particles is suitable for good collection efficiencies. However, the temperature and pressure require rather expensive materials thereby negating some of the cost benefits. With precipitator installation after the CO boiler a larger gas volume must be handled because of reduced pressure, and the addition of the products of combustion. The temperatures and pressures allow for a less expensive design of mechanical parts. To make up for less favorable resistivity of the particles, ammonia is injected in the gas stream to increase collection efficiency.

F. New Source Performance Standards and Regulation Limitations;

New Source Performance Standards (NSPS): On March 8, 1974, EPA promulgated New Source Performance Standards (NSPS) for Petroleum Refineries, Fluid Catalytic Cracking Units. The March 8, 1974 Federal Register, section 60.102, limits particulate matter emissions from coke burn-off in the catalyst regenerator to be not in excess of 1.0 kg/1000 kg (1.0 lb/1000 lbs). Section 60.106 lists equations to determine the particulate emission based on coke burning rate, volume of combustion air, and dust loading of the exhaust. It has been calculated that this value under typical refinery conditions is equivalent to 20.4 lbs/10^3 bbl of fresh feed. ([4])[55] For the 40,000 bbl/day fluid catalytic cracking unit discussed in Section D, the limitation is 34 lbs/hr.

State Regulations for New and Existing Sources: Colorado, Indiana, Kentucky, Wisconsin, and Virginia have identical specific regulations for petroleum refineries equal to the restrictions of the NSPS. For the 40,000 bbl/day refinery discussed in Section D, the limitation is 34 lbs/hr.

State Regulations for Existing General Processes: New York has the most restrictive limitation based on a process weight of 9,000,000 lbs/hr of 95 lbs/hr emission. Mississippi process weight table ends at 6,000,000 lbs/hr with a limitation of 876 lbs/hr for the least restrictive limitation. For states without specific regulations for fluid catalytic cracking units, the catalyst recirculation rate is the process weight rate. Table IX-2 presents the uncontrolled and controlled emissions and limitations from fluid catalytic cracking units.

TABLE IX-2

PARTICULATE EMISSIONS AND LIMITATIONS FROM FLUID CATALYTIC CRACKING UNITS

Type of Operation and Control	% Control	Emission Rates (lbs on 40,000 bbl/day)		Limitations[3]							
				NSPS		Colorado		New York		Mississippi	
		lbs/hr	kg/hr	lbs/hr	kg/hr	lbs/hr	kg/hr	lbs/hr	kg/hr	lbs/hr	kg/hr
Fluid Catalytic Cracking Unit with 2 stages of internal cyclones	0	350	159	34	15.4	34	15.4	95	43	876	397
Fluid Catalytic Cracking Unit with 2 stages of internal cyclones and CO boiler	0	250	113	34	15.4	34	15.4	95	43	876	397
Fluid Catalytic Cracking Unit with 2 stages of internal cyclones and electrostatic precipitator	82	65	25	34	15.4	34	15.4	95	43	876	397
	92	30	14	34	15.4	34	15.4	95	43	876	397
Fluid Catalytic Cracking Unit with 2 stages of internal cyclones and CO boiler and electrostatic precipitator	82	45	20	34	15.4	34	15.4	95	43	876	397
	92	20	9	34	15.4	34	15.4	95	43	876	397

Potential Source Compliance and Emission Limitations: Fluid Catalytic Cracking Units are potentially substantial emitters of particulate air pollutants. Carbon monoxide boilers and electrostatic precipitators have proved to effectively limit particulate emission.

The Environment Reporter was used to update the emission limitations.

G. References:

Literature used to develop the material presented in this section is listed below:

(1) Air Pollution Control Technology and Costs in Nine Selected Areas (Final Report). Industrial Gas Cleaning Institute EPA Contract No. 68-02-0301. September, 1972.

(2) Background Information for Proposed New Source Standards: Asphalt Concrete Plants, Petroleum Refineries, Storage Vessels, Secondary Lead Smelters, and Refineries, Brass or Bronze Ingot Production Plants, Iron and Steel Plants, Sewage Treatment Plants, Volume I, Main Text. EPA OAQPS June, 1973.

(3) Memo from Charles B. Sedman, Industrial Studies Branch, EPA, March 4, 1976.

(4) Impact of New Source Performance Standards on 1985 National Emissions From Stationary Sources Volume I, Final Report. EPA Contract 68-02-1382. October, 1975.

(5) Analysis of Final State Implementation Plans - Rules and Regulations, EPA, Contract No. 68-02-0248, July 1972, Mitre Corporation.

Literature reviewed but not used in the development of the emissions or description was the following:

(6) Particulate Pollutant System Study, Volume III - Handbook of Emission Properties. Midwest Research Institute. EPA Contract No. CPA22-69-104. May, 1971.

(7) Petroleum Refinery Background Information for Establishment of Federal Standards of Performance for Stationary Sources (Final Report). Prepared for EPA by Process Research Inc. Task Order No. 9. August, 1971.

(8) Air Pollution Control District, County of Los Angeles, Rules and Regulations. January, 1971.

A. Source Category: X Wood Processing

B. Sub Category: Wood Processing (Plywood)

C. Source Description:

In manufacturing plywood, an odd number of veneer plies or veneer and lumber plies are glued together. The grain directions in any two adjacent plies are perpendicular to each other. Plywood sheets range in thickness from 1/8 inch to 1 3/16 inches. These thicknesses can be produced by utilizing 3 to 7 plies.(1)6-16

There are five steps in the manufacture of plywood:

1. sawing and debarking of logs,
2. peeling into veneer,
3. drying veneer,
4. assembling veneers, and
5. gluing with a thermosetting resin.
6. Assembled, glued veneers are heated by steam and pressed.(3)10.3-1

Plywood may be manufactured from almost any type of wood. However, it is generally limited to specific types because of the difficulty in cutting and gluing some types.(1)6-162,163 A flow diagram detailing the manufacture of plywood is presented in Figure X-1.

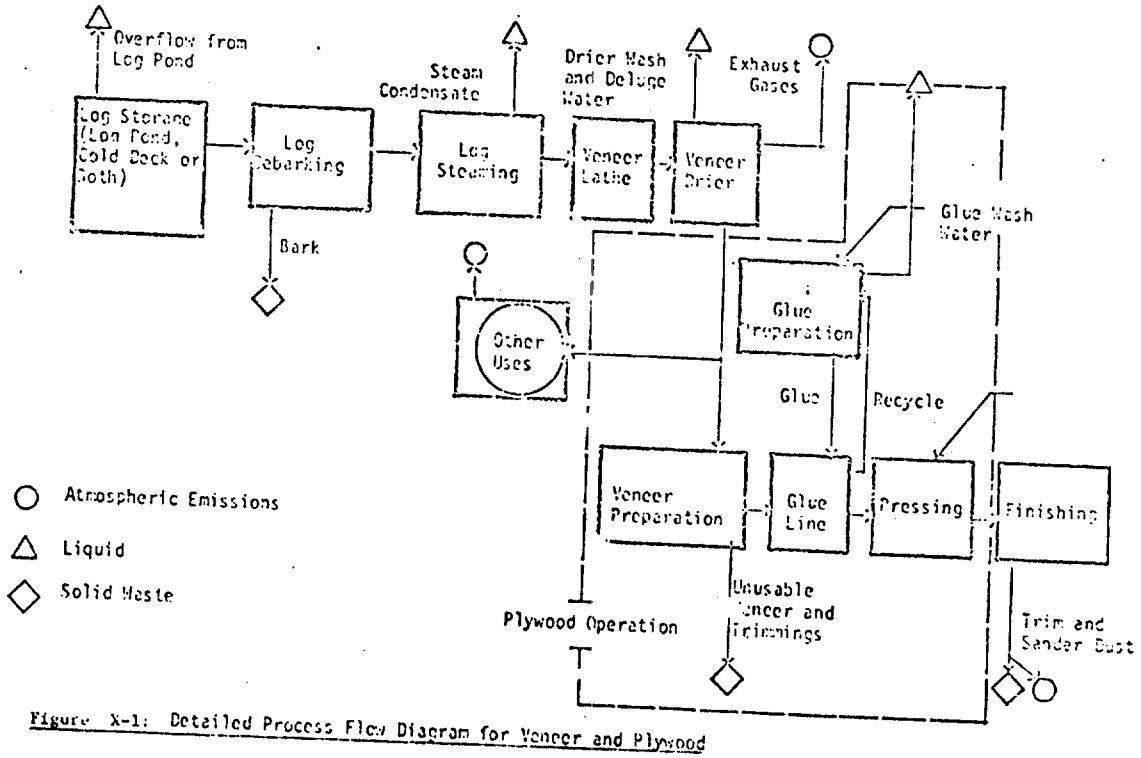

Figure X-1: Detailed Process Flow Diagram for Veneer and Plywood

D. Emissions Rate:

Emissions from the manufacture of plywood include both particulates and hydrocarbons. Particulate matter comes primarily from cutting and sanding operations. Hydrocarbons come primarily from veneer and drying operations.

Most of the particulate is generated during sanding operations of the face and back sheets of the plywood.(1)6-163(3)10.3-1 It is estimated that for every square foot of plywood produced, sawdust is generated from sanding and cutting operations at a rate of 0.066 lbs to 0.132 lbs (.030 kg to .060 kg).(4)77 A portion of this is discharged into the atmosphere as particulate matter, but much of it may be collected.

Hydrocarbons are discharged primarily from the veneer driers. The hydrocarbons discharged include:

1. abietic acid,
2. sesquiterpenes,
3. fatty acids,
4. resin esters, and
5. resin alcohols.

The hydrocarbon discharge of the veneer driers are easily spotted because of their characteristic blue-haze plume. About 63 percent of the hydrocarbon emissions are condensibles, and 37 percent are volatiles.(6)76 Typical particulate and hydrocarbon emissions are detailed in Table X-1.

TABLE X-1

PARTICULATE AND HYDROCARBON EMISSIONS FROM PLYWOOD MANUFACTURING

Type of Oper. & Control	% Control	Particulate Emissions Based on 3.60 tons/hr				Hydrocarbon Emissions Based on 3.60 tons/hr			
		lbs/ton	kg/M ton	lbs/hr	kg/hr	lbs/ton	kg/M ton	lbs/hr	kg/hr
Sanding/Cutting, Uncontrolled	0	150-271	57.5-135	408 - 961	185-436				
Sanding/Cutting, Baghouse	99	1.2-2.7	.6-1.4	4.1 - 9.6	1.9-4.4				
Veneer Drier, Uncontrolled	0					1.0-2.1	.50-1.0	3.6-7.3	1.6-3.3
Veneer Drier, Condenser	50					.5-1.1	.3 - .5	1.8-3.7	.8-1.7

E. Control Equipment

Many woodworking facilities contain equipment to control the emission of particulate matter. The dust from sanding and sawing that escapes into the air is collected in a hood and is transported through duct-work to a sized cyclone. Fine dust is controlled with a baghouse filter.(2)372-374

Some work has been done to reduce hydrocarbon emissions from veneer dryer exhausts. One technique, that in a pilot plant operation, was able to remove up to 50 percent of the hydrocarbon and uses condensation of the gaseous hydrocarbons as the control technique.[5]968

F. New Source Performance Standards and Regulation Limitations:

New Source Performance Standards (NSPS): No New Source Performance Standards have been promulgated for plywood manufacture.

State Regulations for New and Existing Sources for Particulates: Particulate emission regulations for varying process weight rates are expressed differently from state to state. There are four types of regulations that are applicable to the plywood manufacture. The four types of regulations are based on:

1. concentration,
2. control efficiency,
3. gas volume, and
4. process weight.

Concentration Basis: Alaska, Delaware, Pennsylvania, Washington and New Jersey are representative of states that express particulate emission limitations in terms of grains/standard cubic foot and grains/dry standard cubic foot for general processes. The limitations for these five states are:

Alaska	- 0.05 grains/standard cubic foot
Delaware	- 0.20 grains/standard cubic foot
Pennsylvania	- 0.04 grains/dry standard cubic foot, when gas volume is less than 150,000 dscfm
Pennsylvania	- 0.02 grains/dry standard cubic foot, when gas volumes exceed 300,000 dscfm
Washington	- 0.20 grains/dry standard cubic foot
Washington	- 0.10 grains/dry standard cubic foot (new)
New Jersey	- 0.02 grains/standard cubic foot

Control Efficiency Basis: Utah requires general process industries to maintain 85% control efficiency over the uncontrolled emissions.

Gas Volume Basis: Texas expresses particulate emission limitations in terms of pounds/hour for specific stack flow rates expressed in actual cubic feet per minute. The Texas limitations for particulates are as follows:

1	- 10,000	acfm -	9.11 lbs/hr
10,000	- 100,000	acfm -	38.00 lbs/hr
10^5	- 10^6	acfm -	158.6 lbs/hr

Process Weight Rate Basis for New Sources: Several states have adopted particulate emission limitations for new sources with a process weight rate of 3.6 tons/hr. For sources with this process weight rate, Massachusetts is representative of a most restrictive limitation, 4.1 lbs/hr (1.9 kg/hr) and New Hampshire is representative of a least restrictive limitation, 9.7 lbs/hr (4.4 kg/hr).

Process Weight Rate Basis for Existing Sources: The majority of states express particulate emission limitations for existing sources for a wide range of process weight rates. For sources with a process weight rate of 3.6 tons/hr, Colorado is representative of a most restrictive limitation, 7.9 lbs/hr (3.6 kg/hr) and New Hampshire is representative of a least rstrictive limitation, 11.9 lbs/hr (5.4 kg/hr).

Specific Process Regulations for New and Existing Sources: Two states have adopted regulations specifically for plywood manufacture. Oregon requires that sources limit their particulate emissions to 1.0 lbs/1000 ft^2 of plywood or veneer based on 3/8" thickness of finished product. For particleboard, the limitation is 3.0 lbs/1000 ft^2 of particleboard produced based on 3/4" thickness. For hardboard, the limitation is 1.0 lb/1000 ft^2 of hardboard produced based on 1/8" thickness. Virginia requires that in the manufacture of general wood products, that exhausts be limited to 0.05 grains/standard cubic foot.

State Regulations for New and Existing Sources: Currently, hydrocarbon emission regulations are patterned after Los Angeles Rule 66 and Appendix B type legislation. Organic solvent useage is categorized by three basic types. These are, (1) heating of articles by direct flame or baking with any organic solvent, (2) discharge into the atmosphere of photochemically reactive solvents by devices that employ or apply the solvent, (also includes air or heated drying of articles for the first twelve hours after removal from #1 type device) and (3) discharge into the atmosphere of non-photochemically reactive solvents. For the purposes of Rule 66, reactive solvents are defined as solvents of more than 20% by volume of the following:

1. A combination of hydrocarbons, alcohols, aldehydes, esters, ethers or ketones having an olefinic or cyclo-olefinic type of unsaturation: 5 per cent
2. A combination of aromatic compounds with eight or more carbon atoms to the molecule except ethylbenzene: 8 per cent
3. A combination of ethylbenzene, ketones having branched hydrocarbon structures, trichloroethylene or tolune: 20 per cent

Rule 66 limits emissions of hydrocarbons according to the three process types. These limitations are as follows:

Process	lbs/day	& lbs/hour
1. heated process	15	3
2. unheated photochemically reactive	40	8
3. non-photochemically reactive	3000	450

Appendix B (Federal Register, Vol. 36, No. 158 - Saturday, August 14, 1971) limits the emission of photochemically reactive hydrocarbons to 15 lbs/day and 3 lbs/hr. Reactive solvents can be exempted from the regulation if the solvent is less than 20% of the total volume of a water based solvent.

Solvents which have shown to be virtually unreactive are, saturated halogenated hydrocarbons, perchloroethylene, benzene, acetone and c_1-c_5n-paraffins.

For both Appendix B and Rule 66 type legislation, if 85% control has been demonstrated the regulation has been met by the source even if the lbs/day and lbs/hour values have been exceeded. Most states have regulations that limit the emissions from handling and use of organic solvents. Alabama, Connecticut and Ohio have regulations patterned after Los Angeles Rule 66. Indiana and Louisiana have regulations patterned after Appendix B. Some states such as North Carolina have an organic solvent regulation which is patterned after both types of regulations.

Table X-2 presents controlled and uncontrolled hydrocarbon emissions and limitations from plywood manufacture.

TABLE X-2

PARTICULATE AND HYDROCARBON EMISSIONS AND LIMITATIONS FROM PLYWOOD MANUFACTURE

Type of Operation & Control	% Control	Particulate Emissions lb/hr	Particulate Emissions kg/hr	Particulate Limitations lbs/hr / kg/hr New MA	New NH	Existing CO	Existing NH	Existing UT 85%
Sanding and Cutting Uncontrolled	0	408-961	185-436	4.1/1.9	9.7/4.4	7.9/3.6	11.9/5.4	61.2/27.8
Sanding and Cutting, Baghouse	99	4.1-9.6	1.9-4.4	4.1/1.9	9.7/4.4	7.9/3.6	11.9/5.4	61.2/27.8
Type of Operation & Control	% Control	Hydrocar. Emissions lb/hr	Hydrocar. Emissions kg/hr	Hydrocarbon Limitations Heated		Unheated		
Veneer Dryer, Uncontrolled	0	3.6-7.3	1.6-3.3	3	1.4	8	3.6	
Veneer Dryer, with Condenser	50	1.8-3.7	.8-1.7	3	1.4	8	3.6	

Potential Source Compliance and Emission Limitations: For the typical plywood manufacturing operation producing 3.6 tons/hour plywood, Table X-2 indicates that existing control technology is adequate to meet the most restrictive limitations.

The Environment Reporter was used to update the emission limitations.

G. References:

The literature used to develop the preceding discussion on Wood Processing (Plywood) is listed below:

(1) Baumeister, Theodore, Editor, Standard Handbook for Mechanical Engineers, Seventh Edition, 1967.

(2) Danielson, J. A., Air Pollution Engineering Manual, Second Edition, AP-40, Research Triangle Park, North Carolina, EPA, May 1973.

(3) Compilation of Air Pollutant Emission Factors (Second Edition), EPA, Publication No. AP-42, April 1973.

(4) Analysis of Final State Implementation Plans - Rules and Regulations, EPA, Contract 68-02-0248, July 1972, Mitre Corporation.

(5) VanDecar, C. Ted, Plywood Veneer Dryer Control Device, Journal of the Air Pollution Control Association, Volume 22, Number 12, December 1972.

(6) Task Report: Trace Pollutants from Forest Materials, Environmental Science and Engineering, Inc., EPA, Contract No. 68-02-0232, Task Order No. 29, June 21, 1974.

(7) Hopper, Thomas G., Impact of New Source Performance Standards on 1985 National Emissions from Stationary Sources, Volume II, Plywood/Veneer, Industrial Factors, TRC - The Research Corporation of New England, EPA, Contract No. 68-02-1382, Task #3, October 1974.

A. Source Category: XI Manufacturing

B. Sub Category: Automobile Assembly Plant

C. Source Description:

Hydrocarbon emissions from automobile manufacturing arise in a large part from painting. The painting of automobiles as they are manufactured is a multi-step, semiautomated process.

The painting process can be generalized to the following steps:

1. cleaning and degreasing of bare metal,
2. addition of primer coates to bare metal, and
3. addition of finish coats.

The type of paint utilized is not always the same from one type of vehicle to another. Lacquer-based paints and enamels are the most often used paints.(4)8-9

The application of the paint to the automobile is usually done on an assembly line. The primer coats may be added by dipping the parts in a tank of primer. The finish coats are added by two processes. First, the paint may be added to the car parts manually as the parts pass through a suitable ventilated "spray booth." Second, the paint may be added to the car parts automatically as the parts pass through a suitably ventilated "spray booth. " In between some coats, the finish may be dried in an oven.(4)Figure 6

D. Emission Rate:

Paint is consumed at a rate of about 3.5 gallons/car in the manufacture of new automobiles. Assuming that about 60 percent of the 3.5 gallons of paint is solvent that will evaporate during the painting process, and assuming that each gallon weighs about 10 pounds, the weight of hydrocarbon emissions per car is estimated. (3)1-2

Typical solent emissions from an automobile assembly line using a variety of painting techniques is detailed in Table XI-1.(5)355

TABLE XI-1

POTENTIAL REDUCTIONS IN AIR VOLUME FOR TREATMENT

Item	Paint	Condition	Solvent to be treated, lb/day	Air volume, scfm
1.	Solution lacquer	3 topcoats and ovens collect all air	18,000	745,000
2.	Dispersion lacquer	2 topcoats and oven ½ length	11,000	375,000
3.	Dispersion lacquer	2 topcoats and oven selective venting	8,600	120,000
4	Dispersion lacquer	Same Selective venting Staged flow	8,600	55,000

E. Control Equipment:

Because of the large volumes of make-up air necessary to assure operator safety on the paint line, vehicle manufacturers have found the cost of control of the solvent emissions prohibitive. Recently a system has been devised that stages air from manual stations through to the automated stations as depicted in Figure XI-1. By reusing the air the overall volume that needs to be treated can be drastically reduced. Also, energy required to heat make-up air is also reduced. The solvent emission potential is different from one position to the next along the assembly line for painting. Selectively picking the areas where solvent concentrations and quantities are the highest is an effective means to drastically reduce solvent laden air volumes.([5])[357] Incineration of collected exhaust effectively reduces the hydrocarbon levels to acceptable levels.

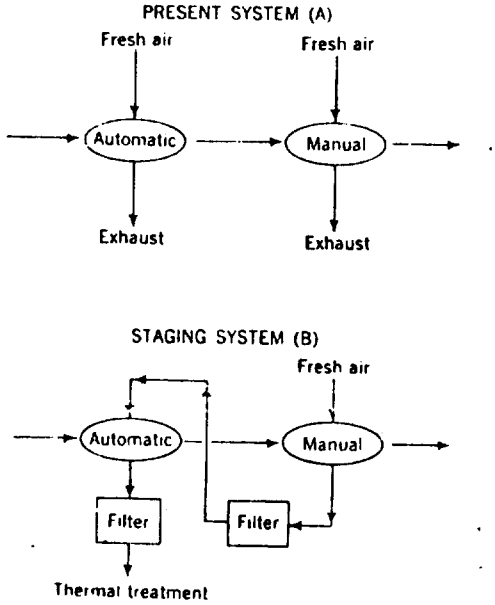

Figure XI-1: Fresh Air Staging

F. New Source Performance Standards and Regulation Limitations:

New Source Performance Standards (NSPS): No New Source Performance Standards have been proposed for automobile painting.

State Regulations for New and Existing Sources: No regulations have been passed specifically limiting hydrocarbon emissions from automobile painting.

The Environment Reporter was used to update the emission limitations.

G. References:

Literature used in the development of the information in this section on automobile assembly is listed below.

1. Background Information for Stationary Source Categories, Provided by EPA, Joseph J. Sableski, Chief, Industrial Survey Section, Industrial Studies Branch, November 3, 1972, "Background Information Needs for Industrial Surface Coatings."

2. Thomas G. Hopper, Impact of New Source Performance Standards on 1985 National Emissions from Stationary Sources, Volume II, Industrial Factors, Automobile Assembly Plants.

3. Thomas G. Hopper, Impact of New Source Performance Standards on 1985 National Emissions from Stationary Sources, Volume II, Emission Factors, Automobile Assembly Plants.

4. R. E. Roberts, J. B. Roberts, An Engineering Approach to Emission Reduction In Automotive Spray Painting, E. I. duPont deNemours & Co. (Inc.).

5. Reducing Solvent Emissions In Automotive Spray Painting, R. E. Roberts and J. B. Roberts, E. I. duPont de Nemours & Company, Inc. JAPCA, April, 1976.

TECHNICAL REPORT DATA

(Please read Instructions on the reverse before completing)

1. REPORT NO. EPA-340/1-78-004	2.
3. RECIPIENT'S ACCESSION NO.	
4. TITLE AND SUBTITLE Controlled and Uncontrolled Emission Rates and Applicable Limitations for Eighty Processes	5. REPORT DATE September 1976
	6. PERFORMING ORGANIZATION CODE
7. AUTHOR(S) Peter N. Formica	8. PERFORMING ORGANIZATION REPORT NO. Project No. 32567
9. PERFORMING ORGANIZATION NAME AND ADDRESS TRC - The Research Corporation of New England, Weathersfield, Connecticut 06109	10. PROGRAM ELEMENT NO.
	11. CONTRACT/GRANT NO. 68-02-1382 Task #12
12. SPONSORING AGENCY NAME AND ADDRESS US Environmental Protection Agency Control Programs Development Division Office of Air Quality Planning & Standards Research Triangle Park, NC 27711	13. TYPE OF REPORT AND PERIOD COVERED Final
	14. SPONSORING AGENCY CODE

15. SUPPLEMENTARY NOTES

CPDD Project Officer was Mr. Robert Schell

16. ABSTRACT

This report contains quantitative information on particulate matter and hydrocarbon emissions for eighty source categories common to many areas of the U.S. The eighty source categories are assessed according to (1) typical plant size and associated emissions, (2) applicable control equipment efficiencies and (3) potential for compliance with New Source Performance Standards and the most and least restrictive regulatory limitations. The study objective is to provide state agencies with information which would allow first cut assessment of emission limitation potential for sources within their jurisdictions, particularly in areas where the current Implementation Plan is substantially inadequate and must be revised.

17. KEY WORDS AND DOCUMENT ANALYSIS

a. DESCRIPTORS	b. IDENTIFIERS/OPEN ENDED TERMS	c. COSATI Field/Group
Air Pollution Control Emission Rates Emission Limitations Stationary Sources	Federal & State Emissions Regulations Emission Factors	13B

18. DISTRIBUTION STATEMENT Unlimited	19. SECURITY CLASS *(This Report)* Unclassified	21. NO. OF PAGES 418
	20. SECURITY CLASS *(This page)* Unclassified	22. PRICE

EPA Form 2220-1 (9-73)

U.S. ENVIRONMENTAL PROTECTION AGENCY
Office of Administration
Library Services Office
MD 35
Research Triangle Park, N.C. 27711

OFFICIAL BUSINESS
PENALTY FOR PRIVATE USE, $300
AN EQUAL OPPORTUNITY EMPLOYER

POSTAGE AND FEES PAID
U.S. ENVIRONMENTAL PROTECTION AGENCY
EPA-335

If your address is incorrect, please change on the above label; tear off; and return to the above address.
If you do not desire to continue receiving this technical report series, CHECK HERE ☐; tear off label, and return it to the above address.

PUBLICATION NO. EPA-340/1-78-004