COMPLIANCE TEST

No. 2 Engine
Emission Point Number 05

ARCO

Sligo Facility
Bossier City, Louisiana
April 6 & 7, 1992

RECEIVED

MAY 1 2 1992

REGULATORY COMPLIANCE
&
ENVIRONMENTAL DEPT

COMPLIANCE TESTING
of the
#2 Engine
Emission Point Number 05

ARCO - Sligo Facility
Bossier City, Louisiana

Test Date:
April 6 & 7, 1992

Report Date: May 1, 1992
Report Number: CJ-1063

"I certify that I have personally examined and am familiar with the information submitted herein, and based on my inquiries of those individuals immediately responsible for obtaining the information, I believe the submitted information is true, accurate, and complete."

Robert Glynn
Project Coordinator

Jerry McCloskey
Consulting Engineer

Andrew Williams
Environmental Technician

Randall Swedeen
Consulting Engineer

TABLE OF CONTENTS

EXECUTIVE SUMMARY

SUMMARY OF RESULTS

SAMPLING METHODS AND ANALYTICAL PROCEDURES

DESCRIPTION OF TEST

APPENDIX A - UNIT DIAGRAM AND SAMPLE POINT LOCATION

APPENDIX B - PLANT OPERATIONAL DATA

APPENDIX C - FIELD DATA

APPENDIX D - CALIBRATION DATA

APPENDIX E - LAB ANALYSIS

APPENDIX F - EQUATIONS

APPENDIX G - ORIGINAL TEST PROPOSAL

APPENDIX H - RESUMES

EXECUTIVE SUMMARY

A Series of three 1-hour compliance test runs labeled C1, C2, and C3 were conducted on the No. 2 engine (Emission Point No. 05) at ARCO's Sligo facility near Bossier City, Louisiana during the period of April 7, 1992. Compliance testing was conducted in accordance with EPA 40 CFR, Appendix A, Methods 1, 2, 3, 4, 7E, and 10.

The average NO_x emissions resulting from the three 1-hour test runs was 12.47 lb/hr and the average CO was 0.96 lb/hr. These values are below the permit values of 24.0 lb/hr NO_x and 3.1 lb/hr CO.

The engine was operating at 300 RPM at 92% load.

A complete summary of test data can be found on the following page of this report titled Summary of Results.

CETCON

SUMMARY OF RESULTS

Unit Designation: ARCO – Sligo Facility
No. 2 Engine (Emission Point No. 05)

PARAMETERS:

Test No.	C1	C2	C3
Date:	4/7/92	4/7/92	4/7/92
Start Time:	903	1115	1250
Test Duration (min.)	60	60	60

ENGINE DESIGN DATA:

Horsepower Rating, BHP	1000
Engine Speed, RPM	300
Manufacturer	Cooper – Bessmer
Serial No.	45452
Model	GMVC – Turbo
Fuel Heating Value, Btu/scf, LHV	1004

OPERATING DATA:

				Average :	Permit Limit :
Load, %	92	92	92	92.0	
Engine Speed, rpm	300	300	300	300	
Horsepower (BHP)	920	920	920	920	
Air Manifold Temp., °F	185	NA	190	188	
Air Manifold Press., in. Hg.	NA	NA	NA	NA	
Ambient Temp., °F	67	72	74	71	
Fuel Flow, scfh	8457	8457	8457	8457	

FLUE GAS:

Exhaust Temp. °F	562	567	570	566	
% O_2 ,dry	15.3	15.3	15.2	15.3	
% Moisture	6.70	6.60	6.88	6.73	
Flow, ACFM	9013	9035	8855	8958	
Dry Flow, SCFM	4379	4367	4261	4332	

EMISSION DATA :

NO_x, ppm	359.0	415.4	430.2	401.5	
NO_x, lb/hr	11.27	13.00	13.14	12.47	24.0
CO, ppm	49.6	54.0	48.0	50.5	
CO, lb/hr	0.95	1.03	0.89	0.96	3.1

SAMPLING METHODS

Pollutants measured according to EPA Methods described by the Code of Federal Regulation, Title 40, Chapter 1, Part 60, Appendix A. The following methods were used:

Method 1	Sample and velocity traverses for stationary sources. Determination of measurement site and calculating sample point location.
Method 2	Determination of stack gas velocity and volumetric flow rate. A calibrated type S pitot is used in conjunction with an incline manometer to determine average gas velocity and for quantifying gas flow.
Method 3	Gas analysis for the determination of dry molecular weight. From a bag sample of the stack gas the percentage of carbon dioxide and oxygen is determined by Orsat analysis with the remainder reported as nitrogen. Additionally, excess air and dry molecular weight is also calculated.
Method 4	Determination of moisture content in stack gases. An EPA impinger sampling train is used to extract a continuous gas sample and condense the moisture into the impingers. The impingers are measured gravimetrically to determine moisture content.
Method 7E	Determination of oxides emissions from stationary sources. Instrument analysis of the gas sampled for nitrogen oxides concentrations by a Thermo Environmental Model 10S oxides of nitrogen analyzer. Instrument is calibrated with EPA Protocol gases and concentrations recorded in PPM.
Method 10	Determination of carbon monoxide emissions from stationary sources. Instrument analysis of the gas sampled for carbon monoxide concentrations by a Thermo Environment Model 48 carbon monoxide analyzer. Concentrations measured in PPM and instrument calibrated with EPA Protocol gases.

DESCRIPTION OF TESTING

Personnel from CETCON, Combustion and Environmental Testing Consultants, arrived at the ARCO's Sligo compressor facility, located near Bossier City, Louisiana, at approximately 10:45 a.m. on Monday, April 6, 1992. After meeting with plant personnel the sampling equipment was moved onto the #2 engine. A preliminary test for nitrogen oxides (NO_x), carbon monoxide (CO), oxygen, moisture, and velocity began at 3:45 p.m. and was completed at 4:15 p.m. The sampling equipment was secured for the evening and all work was completed by 5:30 p.m.

On Tuesday, April 7, personnel arrived at the plant at approximately 7:10 a.m. The sampling equipment was prepared for testing. The first compliance test run for NO_x, CO, moisture and velocity began at 9:03 a.m. Testing continued until the completion of the third test run at 1:50 p.m. The monitors were calibrated and the sampling equipment was moved off the unit. All work was completed by 4:08 p.m.

Testing was observed by Ben Juneau from the Louisiana Department of Environmental Quality (LADEQ).

APPENDIX A

Unit Diagram
and
Sample Point Location

CETCON,

Radco, Inc.

Job No: CJ-1063
Customer: ARCO
Sampling Location: #2 ENGINE
Date: 4\6\92
Time: 3:30

PRELIMINARY VELOCITY TRAVERSE DATA AND SAMPLING LOCATION DATA

	Port A	Port B	Port C	Port D	Average
Port & Inside Diameter (in.)	15	15			
Port & Wall Thickness (in.)	2	2			
Inside Stack Diameter (in.)	13	13			

Sampling Ports are 11 ft. ____ in. Distance A–Port to downstream disturbance = 10.12 stack diameters

____ ft. 20 in. Distance B–Port to upstream disturbance = 1.54 stack diameters

Pitot Tube No: 1

C_P = 0.79

P_B = 29.69 "Hg

P_S = 2.6 "H_2O

A_S (2) = 42.3 in.^{2}

Stack Schematic

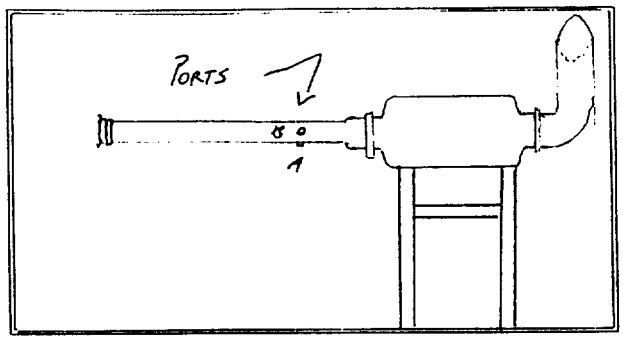

Cross Section

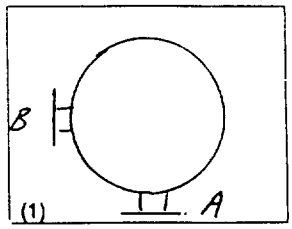

Stack Height ____ ft.

Stack Port Ht. 13 ft.

Point Number	Percent Diameter	Distance From Ref. Point (decimal in.)	Distance From Ref. Point (fractional in.)	Cyclonic Flow Calculation (3) Port A ΔP	Port A T_S	Port A a	Port B ΔP	Port B T_S	Port B a	Port C ΔP	Port C T_S	Port C a	Port D ΔP	Port D T_S	Port D a	Port E ΔP	Port E T_S	Port E a
1	3.2		0 6/16	3.6	460	0	3.5	501	0									
2	10.5		1 5/16	4.6	511	0	4.2	532	0									
3	19.4		2 8/16	4.7	532	0	4.5	543	0									
4	32.3		4 3/16	5.3	571	8	5	574	7									
5	67.7		8 12/16	5.5	580	7	5.7	578	5									
6	80.6		10 7/16	5.3	577	7	5.5	577	0									
7	89.5		11 10/16	5.2	576	5	5.3	576	5									
8	96.8		12 9/16	5.0	570	0	4.2	571	0									
9																		
10																		
11																		
12																		
13																		
14																		
15																		
16																		
17																		
18																		
19																		
20																		
21																		
22																		
23																		
24																		

Notes: (1) Clockwise from ladder or plant north (stacks w/o ladders) – sample port designation in sequence A, B, C, & D for circular ducts. Left to right for rectangular ducts with sample port designation in sequence A, B, C, D, & E. Higher traverse numbers for both rectangular and circular duct toward outside wall.

(2) $A_s = \frac{3.14\ D^2}{4}$

(3) Cyclonic flow indication measured positive in clockwise rotation from null position.

TRAVERSE-CETCON STACK TRAVERSE PROGRAM
Written by R.J.SWEDEEN 10/4/91
CETCON, Combustion and Environmental Testing CONsultants

UNIT:#2 engine
TEST:PRELIM
DATE:4\6\92
TIME:2:30

DUCT TYPE:CIRCULAR
W: 0 D: 0
STACK ID, inch: 13
DOWNSTREAM-A, ft.: 10.12
UPSTREAM-B, ft.: 1.54
DOWNSTREAM DIA's: 9.3
UPSTREAM DIA's: 1.4
STACK AREA, in*2: 132.665
REFERENCE LENGTH, inch.: 2
NUMBER OF POINTS: 8

DISTANCE FROM PROBE TIP TO TRAVERSE POINT(incl.REFERENCE LENGTH)

POINT	LENGTH w/REF,inchs	(w/o REF),inchs	PERCENT ID.
1	2 & 6 /16th	(0 & 6 /16th)	3.2
2	3 & 5 /16th	(1 & 5 /16th)	10.5
3	4 & 8 /16th	(2 & 8 /16th)	19.4
4	6 & 3 /16th	(4 & 3 /16th)	32.3
5	10 & 12 /16th	(8 & 12 /16th)	67.7
6	12 & 7 /16th	(10 & 7 /16th)	80.6
7	13 & 10 /16th	(11 & 10 /16th)	89.5
8	14 & 9 /16th	(12 & 9 /16th)	96.8

APPENDIX B

Plant Operational Data

APPENDIX C

Field Data

CE . ON

RADCO, INC.

Job No.	CJ-1063	Field Data	MOISTURE\VEL.	Barometer No.	1	Barometric Pressure, P_B	29.79
Date	4\7\92	Run No.	C-1	Pitot Tube No.	1	Ambient Temp., °F	67
Customer	ARCO	Time of Run, T_R	60 min.	Pitot Tube, C_P	0.790	Stack Pressure, P_s	3.6 in. H_2O = 30.05 in. Hg
Unit	#2 ENGINE	Sample Box No.	1	Nozzle No.		Initial Leak @	15.0 in. Hg = 0.000 cfm
Operator	RGG, AJW	Meter Box No.	1	Nozzle Dia., D_N	in.	Final Leak @	5.0 in. Hg = 0.000 cfm
File Name	1063 C1.wk1	Stack Area, A_s	132.7 in²	Assumed Moisture %		Purge To:	Time:

Point	Clock Time	Dry Gas Meter, CF	Pitot "H_2O ΔP_s	Orifice ΔH P_M in. H_2O Desired	Orifice ΔH P_M in. H_2O Actual	Vacumn In. Hg	Stack Temp. °F T_s	Probe Temp. °F	Oven Temp. °F	Effluent Temp. °F	Dry Gas Temp. °F T_M Inlet	Dry Gas Temp. °F T_M Outlet	Remarks
B 8	903	162.300	4.70	1.00	1.00	2.0	567			68	69	67	
7	908	164.950	5.50	1.00	1.00	2.0	577			53	71	67	
6	913	167.580	5.50	1.00	1.00	2.0	577			52	71	67	
5	918	170.220	5.70	1.00	1.00	2.0	579			52	72	67	
4	923	173.000	5.00	1.00	1.00	2.0	578			54	74	68	
3	928	175.100	4.40	1.00	1.00	2.0	569			53	75	68	
2	933	178.170	4.00	1.00	1.00	2.0	557			52	77	69	
1	938	180.830	3.20	1.00	1.00	2.0	481			52	78	69	
A 8	943	183.480	5.00	1.00	1.00	2.0	570			52	79	70	
7	948	186.140	5.40	1.00	1.00	2.0	573			54	79	71	
6	953	188.770	5.60	1.00	1.00	2.0	576			54	80	71	
5	958	191.450	5.70	1.00	1.00	2.0	580			55	81	72	
4	1003	194.154	5.50				573						
3			4.80				571						
2			4.30				556						
1			4.10				513						
END													

Avg ΔP_s 4.900 Avg P_M 1.000 Avg T_s 562 Avg T_M 72

Avg($\Delta P_s^{1/2}$) 2.207

Volume DGM 31.854 ,CF x C_F 0.975 = V_M 31.058 SCF

Impinger No.	(1)	(2)	(3)	(4)	(5)	(6)	Total
Final Wt, gm	618.4	605.1	506.7	720.8			2451
Initial Wt, gm	583.2	599.8	505.9	715.3			2404.2
Difference, gm	35.2	5.3	0.8	5.5			46.8 = V_W

Filter No.	
Final Wt., gm	
Initial Wt., gm	
Difference, gm	
V_W =	46.8
SO_2 gm (−)	
V_W =	

ORSTAT	
$\%CO_2$	3.2
$\%O_2$ (dry)	15.3
%CO	
$\%N_2$	81.5
% Excess Air	243.0

Avg ΔP	4.900	in. H_2O
Avg($\Delta P_s^{1/2}$)	2.207	
Avg. P_M	1.000	in. H_2O
Avg. T_s	562	°F
Avg. T_s	1022	°R
Avg.T_M	72	°F
Avg.T_M	532	°R

$V_{M\,std} = 17.65\ V_M\ [P_B + (P_M / 13.6) / T_M] =$	30.771	SCF
	0.513	SCFM
$V_{Wgas} = 0.0472 \times V_W =$	2.209	SCF
$\%M = V_{W\,gas} / (V_{M\,std} + V_{W\,gas}) \times 100 =$	6.70	%
$M_D = (100 - \%M) / 100$	0.9330	
$MW_D = (\%\ CO_2 \times 0.44) + (\%\ O_2 \times 0.32) + (\%\ N_2 \times 0.28) =$	29.124	lb/lb*mole
$MW = M_D \times MW_D + 18\ (1 - M_D) =$	28.38	lb/lb*mole
$V_s = 5123.8 \times C_p\ (T_s / (P_s \times MW))^{1/2} \times Avg(\Delta P_s^{1/2})$	9,780	fpm
$Q_A = (V_s \times A_s)/144 =$	9,013	ACFM
$Q_s = (0.123 \times V_s \times M_D \times P_s \times A_s) / T_s =$	4379	SCFM
$\%I = (1039 \times V_{Mstd} \times T_s) / (M_D \times P_s \times V_s \times T_R \times D_N^2) =$		%

CA..ON

RADCO, INC.

REV. 1

Job No.	CJ-1063	Field Data	MOISTURE/VEL.	Barometer No.	1	Barometric Pressure, P_B	29.80
Date	4/7/92	Run No.	C-2	Pitot Tube No.	1	Ambient Temp., °F	72
Customer	ARCO	Time of Run, T_R	60 min.	Pitot Tube, C_P	0.790	Stack Pressure, P_s	2.8 in. H_2O = 30.01 in. Hg
Unit	#2 ENGINE	Sample Box No.	2	Nozzle No.		Initial Leak @	15.0 in. Hg = 0.000 cfm
Operator	RGG, AJW	Meter Box No.	1	Nozzle Dia., D_N	in.	Final Leak @	4.5 in. Hg = 0.000 cfm
File Name	1063 C2.wk1	Stack Area, A_s	132.7 in²	Assumed Moisture %		Purge To:	Time:

Point	Clock Time	Dry Gas Meter, CF	Pitot "H_2O ΔP_s	Orifice ΔH P_M in. H_2O Desired	Orifice ΔH P_M in. H_2O Actual	Vacumn in. Hg	Stack Temp. °F T_s	Probe Temp. °F	Oven Temp. °F	Effluent Temp. °F	Dry Gas Temp. °F T_M Inlet	Dry Gas Temp. °F T_M Outlet	Remarks
8	1115	194.600	5.60	1.00	1.00	2.0	570			59	72	72	
7	1120	197.260	5.40	1.00	1.00	2.0	572			53	72	72	
6	1125	199.950	5.60	1.00	1.00	2.0	575			54	74	72	
5	1130	202.600	5.70	1.00	1.00	2.0	580			54	75	73	
4	1135	205.280	4.80	1.00	1.00	2.0	578			55	76	73	
3	1140	208.000	4.30	1.00	1.00	2.0	571			55	77	73	
2	1145	210.680	3.90	1.00	1.00	2.0	547			56	78	73	
1	1150	213.340	3.70	1.00	1.00	2.0	539			56	79	73	
8	1155	216.030	5.10	1.00	1.00	2.0	573			54	80	73	
7	1200	218.650	5.60	1.00	1.00	2.0	579			53	80	73	
6	1205	221.320	5.40	1.00	1.00	2.0	580			53	80	73	
5	1210	224.000	5.30	1.00	1.00	2.0	580			53	80	73	
4	1215	226.668	5.30				584						
3			4.60				570						
2			4.20				548						
1			3.80				526						
END													

Avg ΔP_s 4.894 Avg P_M 1.000 Avg T_s 567 Avg T_M 75

Avg($\Delta P_s^{1/2}$) 2.206

Volume DGM 32.068 CF x C_F 0.975 = V_M 31.268 SCF

Impinger No.	(1)	(2)	(3)	(4)	(5)	(6)	Total
Final Wt, gm	626.5	596.7	503.2	742.3			2468.7
Initial Wt, gm	589.3	592.5	502.8	738			2422.6
Difference, gm	37.2	4.2	0.4	4.3			46.1 = V_W

Filter No.	
Final Wt., gm	
Initial Wt., gm	
Difference, gm	
V_W =	46.1
SO_2 gm (−)	
V_W =	

ORSTAT	
$\%CO_2$	3.2
$\%O_2$ (dry)	15.3
%CO	
$\%N_2$	81.5
% Excess Air	243.0

Avg ΔP	4.894	in. H_2O
Avg($\Delta P_s^{1/2}$)	2.206	
Avg. P_M	1.000	in. H_2O
Avg. T_s	567	°F
Avg. T_s	1027	°R
Avg.T_M	75	°F
Avg.T_M	535	°R

$V_{M\,std} = 17.65\ V_M\ [P_B + (P_M / 13.6) / T_M] =$	30.814	SCF
	0.514	SCFM
$V_{Wgas} = 0.0472 \times V_W =$	2.176	SCF
$\%M = V_{W\,gas} / (V_{M\,std} + V_{W\,gas}) \times 100 =$	6.60	%
$M_D = (100 - \%M) / 100$	0.9340	
$MW_D = (\%\ CO_2 \times 0.44) + (\%\ O_2 \times 0.32) + (\%\ N_2 \times 0.28) =$	29.124	lb/lb*mole
$MW = M_D \times MW_D + 18\ (1 - M_D) =$	28.39	lb/lb*mole
$V_s = 5123.8 \times C_p\ (T_s / (P_s \times MW))^{1/2} \times Avg(\Delta P_s^{1/2})$	9,804	fpm
$Q_A = (V_s \times A_s)/144 =$	9,035	ACFM
$Q_s = (0.123 \times V_s \times M_D \times P_s \times A_s) / T_s =$	4367	SCFM
$\%I = (1039 \times V_{M\,std} \times T_s) / (M_D \times P_s \times V_s \times T_R \times D_N^2) =$		%

CRECON RADCO, INC. REV. 1

Job No.	CJ-1063	Field Data	MOISTURE/VEL.	Barometer No.	1	Barometric Pressure, P_B	29.79
Date	4\7\92	Run No.	C-3	Pitot Tube No.	1	Ambient Temp., °F	74
Customer	ARCO	Time of Run, T_R	60 min.	Pitot Tube, C_P	0.790	Stack Pressure, P_s	3.5 in. H_2O = 30.05 in. Hg
Unit	#2 ENGINE	Sample Box No.	3	Nozzle No.		Initial Leak @	15.5 in. Hg = 0.000 cfm
Operator	RGG, AJW	Meter Box No.	1	Nozzle Dia., D_N	in.	Final Leak @	5.0 in. Hg = 0.000 cfm
File Name	1063 C3.wk1	Stack Area, A_s	132.7 in²	Assumed Moisture %		Purge To:	Time:

Point	Clock Time	Dry Gas Meter, CF	Pitot "H_2O ΔP_s	Orifice ΔH P_M in. H_2O Desired	Orifice ΔH P_M in. H_2O Actual	Vacumn in. Hg	Stack Temp. °F T_s	Probe Temp. °F	Oven Temp. °F	Effluent Temp. °F	Dry Gas Temp. °F T_M Inlet	Dry Gas Temp. °F T_M Outlet	Remarks
B 8	1250	227.000	4.20	1.00	1.00	2.0	573			61	73	72	
7	1255	227.710	5.10	1.00	1.00	2.0	574			53	74	72	
6	1300	232.470	5.70	1.00	1.00	2.0	580			51	76	73	
5	1305	235.180	5.10	1.00	1.00	2.0	580			52	77	74	
4	1310	237.880	5.30	1.00	1.00	2.0	583			52	78	74	
3	1315	240.550	5.00	1.00	1.00	2.0	580			52	78	74	
2	1320	243.830	4.00	1.00	1.00	2.0	578			52	78	74	
1	1325	245.960	3.10	1.00	1.00	2.0	554			52	78	74	
A 8	1330	248.560	4.60	1.00	1.00	2.0	575			52	78	73	
7	1335	251.240	5.20	1.00	1.00	2.0	583			51	78	73	
6	1340	254.050	5.20	1.00	1.00	2.0	582			51	78	73	
5	1345	256.620	5.00	1.00	1.00	2.0	584			52	79	73	
4	1350	259.323	5.10				579						
3			4.70				545						
2			4.20				551						
1			3.50				516						
END													

Avg ΔP_s 4.688 Avg P_M 1.000 Avg T_s 570 Avg T_M 75

Avg($\Delta P_s^{1/2}$) 2.159

Volume DGM 32.323 ,CF x C_F 0.975 = V_M 31.515 SCF

Impinger No.	(1)	(2)	(3)	(4)	(5)	(6)	Total
Final Wt, gm	622.2	594.1	503	740.7			2460
Initial Wt, gm	585	589.3	502.3	734.8			2411.4
Difference, gm	37.2	4.8	0.7	5.9			48.6 = V_W

$V_{M\,std}$ = 17.65 V_M [P_B+(P_M / 13.6) / T_M] =	31.049	SCF
	0.517	SCFM
V_{Wgas} = 0.0472 x V_W =	2.294	SCF
%M = $V_{W\,gas}$ / ($V_{M\,std}$ + $V_{W\,gas}$) x 100 =	6.88	%
M_D = (100 − %M) / 100	0.9312	
MW_D = (% CO_2 x 0.44) + (% O_2 x 0.32) + (% N_2 x 0.28) =	29.120	lb/lb*mole
MW = M_D x MW_D + 18 (1 − M_D) =	28.35	lb/lb*mole
V_s = 5123.8 x C_p (T_s / (P_s x MW))$^{1/2}$ x Avg($\Delta P_s^{1/2}$)	9,609	fpm
Q_A = (V_s x A_s)/144 =	8,855	ACFM
Q_s = (0.123 x V_s x M_D x P_s x A_s) / T_s =	4261	SCFM
%I = (1039 x V_{Mstd} x T_s) / (M_D x P_s x V_s x T_R x D_N^2) =		%

Filter No.	
Final Wt., gm	
Initial Wt., gm	
Difference, gm	
V_W =	48.6
SO_2 gm (−)	
V_W =	

ORSTAT	
%CO_2	3.2
%O_2 (dry)	15.2
%CO	
%N_2	81.6
% Excess Air	236.6

Avg ΔP	4.688	in. H_2O
Avg($\Delta P_s^{1/2}$)	2.159	
Avg. P_M	1.000	in. H_2O
Avg. T_s	570	°F
Avg. T_s	1030	°R
Avg.T_M	75	°F
Avg.T_M	535	°R

CETCON, Orsat .wk1

Radco, Inc.

Plant Sligo
Unit: #2 Engine
Operator: GLM
CJ– 1063

ORSAT ANALYSIS

TEST # or BAG #	DATE and TIME	COMPONENTS	RUN# 1	RUN # 2	RUN # 3	AVG
C1	4/7/92 903	CO_2	3.2	3.1	3.2	3.2
		SUM	18.6	18.4	18.4	
		O_2	15.4	15.3	15.2	15.3
		N_2	81.4	81.6	81.6	81.5
C2	4/7/92 1115	CO_2	3.2	3.2	3.2	3.2
		SUM	18.6	18.4	18.6	
		O_2	15.4	15.2	15.4	15.3
		N_2	81.4	81.6	81.4	81.5
C3	4/7/92 1250	CO_2	3.2	3.3	3.2	3.2
		SUM	18.6	18.4	18.4	
		O_2	15.4	15.1	15.2	15.2
		N_2	81.4	81.6	81.6	81.5
4		CO_2				
		SUM				
		O_2				
		N_2				
5		CO_2				
		SUM				
		O_2				
		N_2				
6		CO_2				
		SUM				
		O_2				
		N_2				
7		CO_2				
		SUM				
		O_2				
		N_2				
8		CO_2				
		SUM				
		O_2				
		N_2				
9		CO_2				
		SUM				
		O_2				
		N_2				
10		CO_2				
		SUM				
		O_2				
		N_2				
11		CO_2				
		SUM				
		O_2				
		N_2				
12		CO_2				
		SUM				
		O_2				
		N_2				
AVG		CO_2, O_2, N_2				

SLIGO/CJ-1063/#2 ENG C1

TEST DATE : 04-07-1992
START TIME: 08:13:57
FILE NAME : C:\DAQ\63C1 .ID%

CHANNEL#	NOx	CO	O2	SO2	THC	T1	T2	T3
CH.UNITS	PPM	PPM	%	PPM	PPM	F	F	F
<MIN>			<ANALYZER OUTPUT-VDC>					
0	3.47	0.10	7.57	0.06	-0.03	0.01	1.18	2.02
1	3.51	0.10	7.56	0.05	-0.03	0.03	0.26	1.25
2	3.62	0.11	7.55	0.06	-0.03	0.03	0.27	1.00
3	3.57	0.10	7.56	0.06	-0.03	0.02	0.26	0.94
4	3.58	0.10	7.56	0.06	-0.03	0.02	0.27	0.90
5	3.47	0.11	7.56	0.06	-0.02	0.03	0.26	0.87
6	3.41	0.11	7.57	0.06	-0.03	0.01	0.26	0.77
7	3.52	0.10	7.56	0.05	-0.03	0.02	0.26	0.76
8	3.49	0.12	7.56	0.05	-0.02	0.02	0.27	0.81
9	3.80	0.10	7.57	0.05	-0.03	0.03	0.27	0.84
10	3.68	0.10	7.55	0.06	-0.03	0.03	0.27	0.84
11	3.53	0.10	7.56	0.06	-0.03	0.04	0.27	0.81
12	3.67	0.11	7.57	0.06	-0.03	0.03	0.28	0.82
13	3.60	0.10	7.57	0.05	-0.03	0.03	0.27	0.82
14	3.66	0.10	7.57	0.05	-0.03	0.04	0.27	0.83
15	3.67	0.11	7.57	0.06	-0.02	0.01	0.28	0.84
16	3.48	0.11	7.58	0.06	-0.03	0.02	0.28	0.79
17	3.57	0.11	7.57	0.06	-0.03	0.02	0.27	0.71
18	3.66	0.11	7.57	0.05	-0.03	0.04	0.27	0.50
19	3.54	0.11	7.58	0.05	-0.03	0.03	0.27	0.47
20	3.44	0.10	7.59	0.06	-0.03	0.02	0.27	0.48
21	3.58	0.11	7.59	0.05	-0.03	0.02	0.26	0.51
22	3.66	0.11	7.60	0.06	-0.03	0.03	0.29	0.50
23	3.61	0.11	7.57	0.06	-0.03	0.03	0.27	0.47
24	3.59	0.11	7.58	0.06	-0.03	0.02	0.27	0.48
25	3.56	0.10	7.58	0.05	-0.03	0.02	0.27	0.49
26	3.50	0.10	7.60	0.06	-0.03	0.03	0.28	0.49
27	3.40	0.11	7.58	0.06	-0.03	0.03	0.27	0.51
28	3.49	0.10	7.57	0.06	-0.03	0.02	0.27	0.56
29	3.53	0.10	7.61	0.05	-0.03	0.03	0.27	0.67
30	3.38	0.10	7.55	0.06	-0.02	0.02	0.27	0.70
31	3.47	0.11	7.59	0.05	-0.03	0.03	0.27	0.71
32	3.60	0.11	7.56	0.06	-0.02	0.01	0.27	0.75
33	3.47	0.11	7.61	0.05	-0.03	0.03	0.27	0.74
34	3.59	0.11	7.59	0.06	-0.02	0.03	0.27	0.78
35	3.40	0.10	7.56	0.06	-0.03	0.02	0.28	0.75
36	3.47	0.11	7.56	0.06	-0.03	0.02	0.27	0.67
37	3.53	0.10	7.59	0.05	-0.03	0.03	0.27	0.61
38	3.46	0.10	7.58	0.05	-0.02	0.02	0.27	0.55
39	3.47	0.10	7.58	0.06	-0.03	0.03	0.27	0.55
40	3.44	0.10	7.61	0.05	-0.03	0.03	0.27	0.56
41	3.60	0.11	7.61	0.06	-0.03	0.02	0.28	0.59
42	3.47	0.10	7.62	0.06	-0.03	0.03	0.28	0.56
43	3.61	0.10	7.62	0.05	-0.03	0.04	0.28	0.56
44	3.55	0.10	7.61	0.05	-0.03	0.04	0.27	0.55
45	3.51	0.10	7.62	0.06	-0.03	0.02	0.28	0.57
46	3.54	0.11	7.61	0.06	-0.03	0.02	0.28	0.61
47	3.45	0.10	7.63	0.05	-0.03	0.04	0.27	0.67
48	3.42	0.11	7.62	0.06	-0.03	0.03	0.28	0.70
49	3.60	0.10	7.62	0.06	-0.03	0.03	0.29	0.75
50	3.55	0.11	7.62	0.06	-0.03	0.03	0.28	0.76
51	3.43	0.10	7.62	0.06	-0.03	0.02	0.29	0.76
52	3.46	0.11	7.63	0.06	-0.03	0.02	0.28	0.72
53	3.37	0.11	7.63	0.06	-0.02	0.02	0.28	0.56
54	3.62	0.11	7.65	0.05	-0.02	0.02	0.28	0.46
55	3.40	0.11	7.66	0.06	-0.02	0.02	0.29	0.50
56	3.19	0.10	7.67	0.06	-0.02	0.02	0.28	0.51
57	3.21	0.10	7.72	0.05	-0.03	0.04	0.27	0.57
58	3.41	0.11	7.70	0.06	-0.03	0.03	0.28	0.63
59	3.44	0.10	7.68	0.06	-0.03	0.03	0.28	0.68
60	3.39	0.10	7.68	0.06	-0.03	0.01	0.28	0.70
MEAN	3.51	0.10	7.60	0.06	-0.03	0.03	0.29	0.70
END TIME:	09:13:56							
FULLSPAN	896.00	426.90	21.00	424.00	55.20	1000.00	2500.00	2500.00
SPAN VDC	8.78	0.84	10.00	4.36	0.60	1.01	2.48	2.50
MID SPAN	442.40	224.90	8.74	218.40	25.00	500.00	1000.00	0.00
MID VDC	4.40	0.43	4.17	2.17	0.25	0.48	0.78	0.01
ZERO GAS	0.00	0.00	0.00	0.00	0.00	0.00	0.00	0.00
ZERO VDC	0.02	-0.02	-0.02	-0.01	-0.01	0.00	0.00	0.00

CJ-1063 4/7/92 MEAN: 359.01PPM 63C1 SLIGO #2 ENGINE

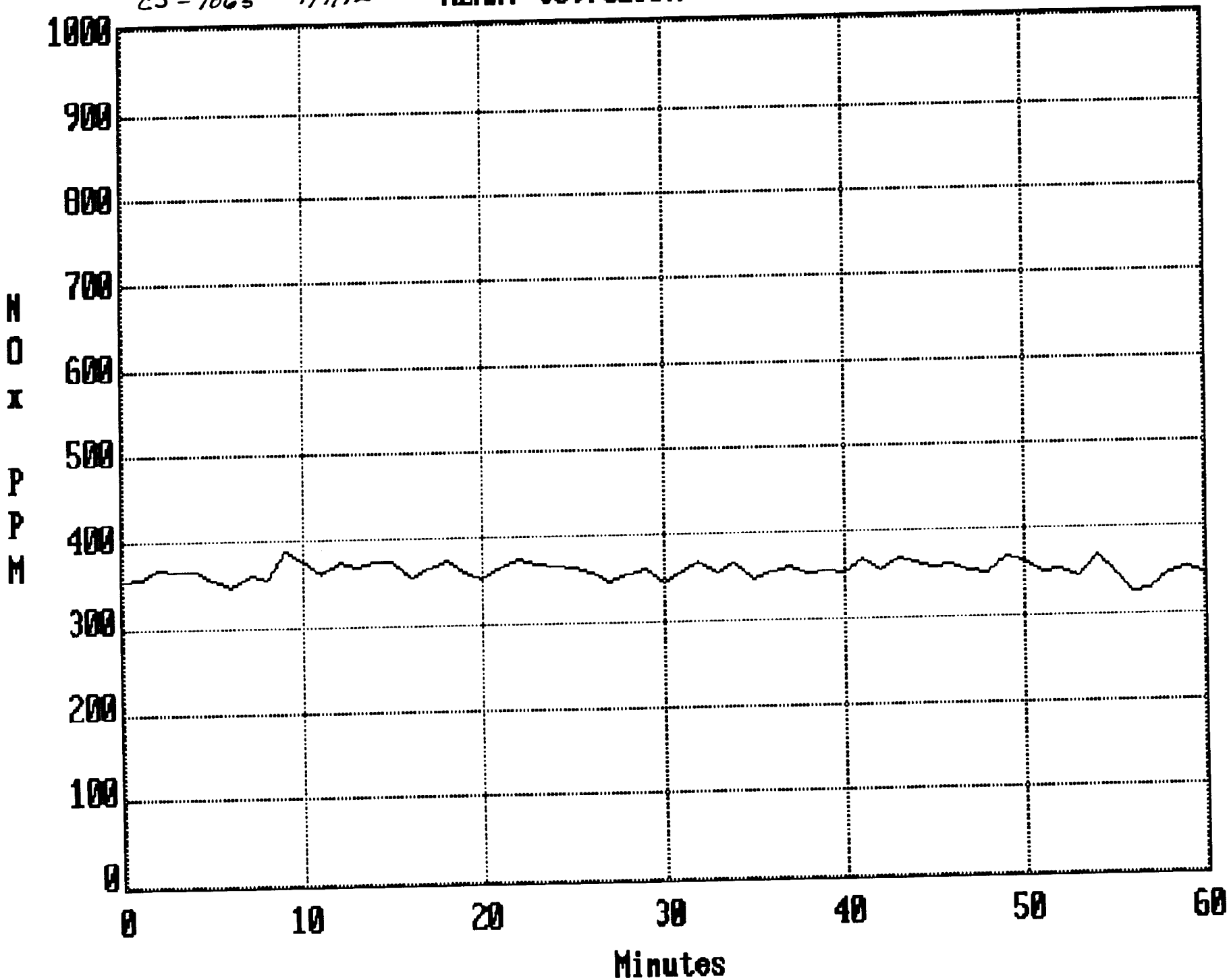

CJ-1063 4/7/92 MEAN: 49.64PPM 63C1 SUGO #2 ENGINE

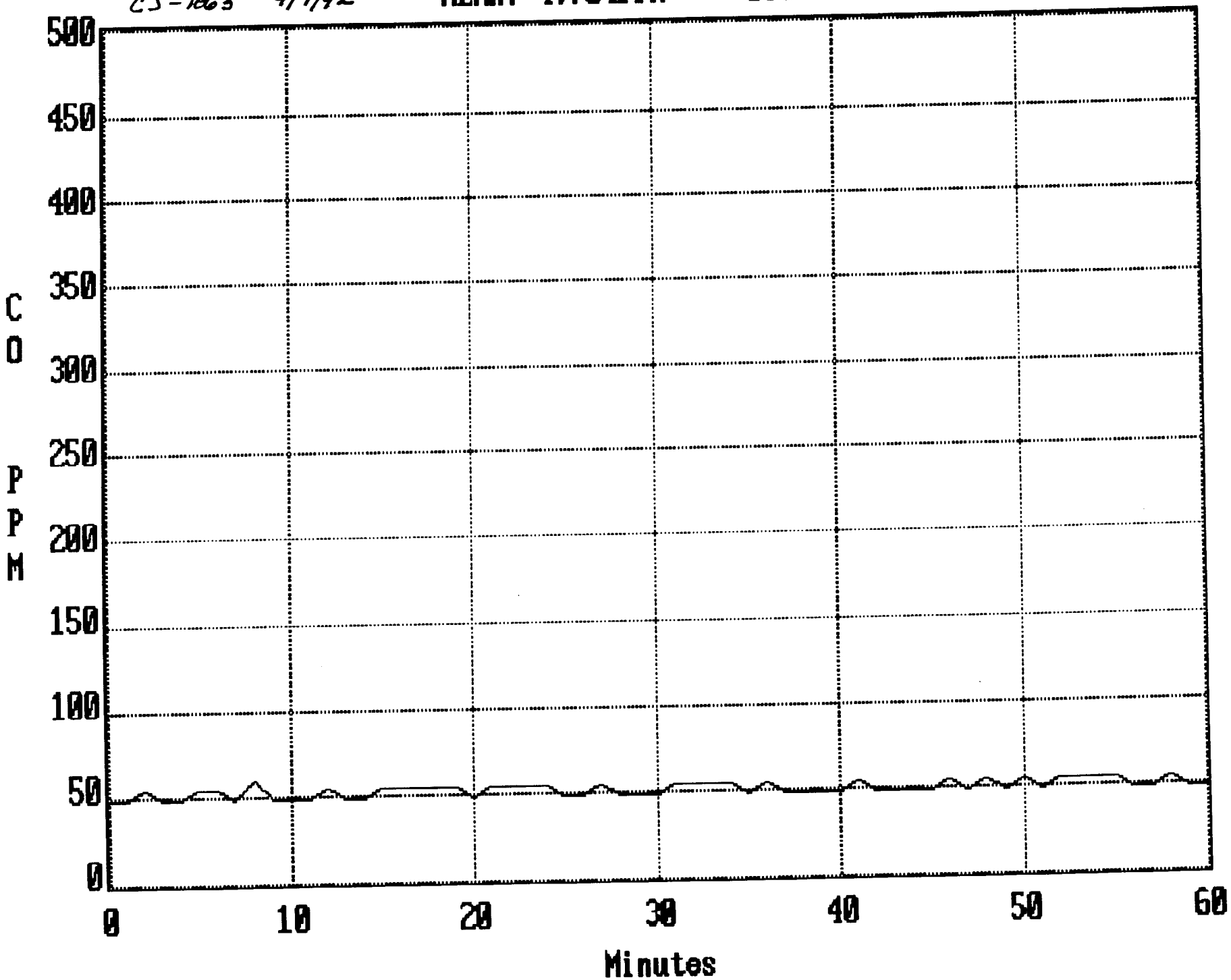

SLIGO/CJ-1063/#2 ENG C2

TEST DATE : 04-07-1992
START TIME: 10:26:01
FILE NAME : C:\DAQ\63C2 .ID%

CHANNEL#	NOx	CO	O2	SO2	THC	T1	T2	T3
CH.UNITS	PPM	PPM	%	PPM	PPM	F	F	F
<MIN>			<ANALYZER OUTPUT-VDC>					
0	4.39	0.11	7.39	0.05	-0.03	0.04	0.95	1.93
1	4.31	0.10	7.44	0.06	-0.03	0.01	0.39	1.37
2	4.12	0.11	7.42	0.06	-0.03	0.01	0.34	1.11
3	4.19	0.11	7.38	0.05	-0.03	0.02	0.35	1.01
4	4.10	0.11	7.46	0.06	-0.02	0.03	0.35	0.98
5	3.97	0.11	7.44	0.05	-0.02	0.01	0.35	0.94
6	4.16	0.10	7.43	0.05	-0.03	0.03	0.36	0.91
7	4.25	0.10	7.37	0.05	-0.03	0.03	0.36	0.92
8	4.04	0.11	7.37	0.05	-0.03	0.02	0.37	0.90
9	4.21	0.11	7.41	0.06	-0.03	0.01	0.38	0.91
10	4.28	0.11	7.43	0.06	-0.03	0.04	0.39	0.91
11	4.26	0.10	7.38	0.05	-0.03	0.02	0.39	0.94
12	4.03	0.11	7.39	0.05	-0.02	0.03	0.37	0.91
13	4.11	0.10	7.42	0.06	-0.03	0.02	0.39	0.90
14	4.05	0.11	7.40	0.06	-0.03	0.01	0.39	0.90
15	4.13	0.11	7.43	0.06	-0.02	0.02	0.39	0.89
16	3.98	0.10	7.36	0.05	-0.02	0.02	0.39	0.89
17	3.95	0.11	7.36	0.06	-0.03	0.03	0.40	0.88
18	3.89	0.12	7.34	0.05	-0.03	0.03	0.40	0.86
19	4.04	0.11	7.38	0.05	-0.03	0.01	0.40	0.84
20	4.09	0.11	7.36	0.06	-0.03	0.03	0.42	0.85
21	3.98	0.11	7.34	0.05	-0.02	0.02	0.41	0.83
22	4.04	0.11	7.43	0.06	-0.02	0.03	0.42	0.87
23	4.21	0.11	7.45	0.06	-0.03	0.03	0.42	0.91
24	4.13	0.11	7.45	0.05	-0.02	0.02	0.42	0.94
25	4.07	0.11	7.48	0.06	-0.02	0.04	0.41	0.95
26	4.13	0.11	7.50	0.06	-0.03	0.03	0.41	0.95
27	4.10	0.10	7.51	0.06	-0.02	0.03	0.41	0.98
28	4.08	0.11	7.47	0.06	-0.02	0.01	0.40	0.97
29	4.07	0.11	7.51	0.07	-0.02	0.02	0.40	0.95
30	4.07	0.10	7.52	0.06	-0.02	0.01	0.39	0.79
31	3.93	0.11	7.53	0.06	-0.03	0.03	0.38	0.67
32	4.13	0.11	7.53	0.06	-0.03	0.02	0.38	0.61
33	4.10	0.10	7.52	0.06	-0.03	0.03	0.38	0.60
34	3.92	0.10	7.53	0.06	-0.02	0.03	0.36	0.57
35	4.10	0.11	7.50	0.06	-0.03	0.02	0.37	0.59
36	3.89	0.10	7.49	0.06	-0.03	0.02	0.36	0.59
37	3.89	0.11	7.48	0.05	-0.03	0.03	0.35	0.58
38	3.96	0.10	7.47	0.05	-0.03	0.03	0.35	0.60
39	4.19	0.10	7.48	0.06	-0.02	0.01	0.36	0.58
40	4.02	0.11	7.47	0.05	-0.03	0.02	0.35	0.43
41	4.14	0.10	7.46	0.05	-0.03	0.02	0.35	0.37
42	4.04	0.10	7.46	0.06	-0.03	0.03	0.36	0.46
43	4.05	0.11	7.46	0.06	-0.03	0.02	0.36	0.64
44	4.09	0.10	7.43	0.06	-0.03	0.03	0.37	0.76
45	4.25	0.11	7.43	0.05	-0.03	0.03	0.37	0.83
46	4.08	0.10	7.43	0.05	-0.03	0.03	0.37	0.86
47	4.04	0.11	7.44	0.06	-0.02	0.01	0.38	0.87
48	4.06	0.10	7.45	0.05	-0.03	0.03	0.37	0.87
49	3.89	0.10	7.46	0.05	-0.02	0.03	0.38	0.86
50	4.05	0.10	7.42	0.06	-0.02	0.01	0.39	0.86
51	3.96	0.11	7.44	0.06	-0.03	0.03	0.39	0.86
52	4.03	0.11	7.44	0.05	-0.02	0.03	0.39	0.86
53	4.11	0.10	7.41	0.05	-0.02	0.03	0.40	0.86
54	3.95	0.10	7.45	0.05	-0.03	0.04	0.40	0.85
55	4.12	0.11	7.43	0.06	-0.03	0.03	0.41	0.87
56	4.12	0.10	7.43	0.05	-0.03	0.01	0.42	0.89
57	4.11	0.11	7.45	0.05	-0.03	0.03	0.41	0.90
58	4.04	0.11	7.45	0.06	-0.03	0.02	0.41	0.92
59	4.05	0.10	7.45	0.05	-0.03	0.04	0.40	0.91
60	3.98	0.10	7.45	0.06	-0.03	0.02	0.40	0.91
MEAN	4.08	0.11	7.44	0.05	-0.03	0.02	0.39	0.85
END TIME:	11:26:01							
FULLSPAN	896.00	426.90	21.00	424.00	55.20	1000.00	2500.00	2500.00
SPAN VDC	8.78	0.84	10.00	4.36	0.60	1.01	2.48	2.50
MID SPAN	442.40	224.90	8.74	218.40	25.00	500.00	1000.00	0.00
MID VDC	4.41	0.42	4.17	2.17	0.25	0.48	0.78	0.01
ZERO GAS	0.00	0.00	0.00	0.00	0.00	0.00	0.00	0.00
ZERO VDC	-0.02	-0.03	-0.02	-0.01	-0.01	0.00	0.00	0.00

CEDAQ-ANALYZER RESPONSE TIME TEST (each interval=5 sec.)

END TIME: 04-07-1992
START TIME:13:39:58
FILE NAME:C:\DAQ\TEST.ID%
TEST NAME:SLIGO/CJ-1063/#2 ENG. BIAS CHE

CHANNEL#	NOx	CO	O2	SO2	THC	T1	T2	T3
CH.UNITS	PPM	PPM	%	PPM	PPM	F	F	F
0	0.04	-0.03	10.00	0.08	-0.03	0.04	0.76	1.27
1	0.04	-0.02	10.00	0.10	-0.03	0.04	0.80	1.20
2	0.06	-0.01	10.00	0.08	-0.02	0.04	0.78	1.11
3	0.03	-0.02	10.00	0.09	-0.02	0.03	0.79	1.04
4	0.04	-0.02	10.00	0.11	-0.02	0.00	0.83	0.98
5	0.05	-0.03	10.00	0.09	-0.02	0.00	0.81	0.92
6	0.03	-0.01	10.00	0.10	-0.02	0.01	0.82	0.85
7	0.03	-0.02	10.00	0.10	-0.03	0.02	0.84	0.81
8	0.04	-0.03	10.00	0.10	-0.03	0.03	0.84	0.76
9	0.11	-0.03	9.80	0.08	-0.02	0.05	0.82	0.71
10	0.40	-0.01	9.03	0.08	-0.02	0.02	0.82	0.69
11	0.81	-0.02	8.04	0.07	-0.02	0.03	0.80	0.66
12	1.25	-0.01	7.09	0.04	-0.01	0.02	0.73	0.63
13	1.66	-0.03	6.12	0.04	-0.02	0.02	0.71	0.60
14	2.09	-0.01	5.09	0.04	-0.02	0.03	0.66	0.59
15	2.42	-0.03	4.33	0.00	-0.03	0.02	0.60	0.55
16	2.71	-0.02	3.67	0.01	-0.02	0.02	0.57	0.53
17	2.97	-0.02	3.14	0.01	-0.02	0.01	0.54	0.53
18	3.20	-0.03	2.65	-0.01	-0.03	0.03	0.47	0.49
19	3.37	-0.02	2.26	-0.00	-0.02	0.01	0.45	0.47
20	3.55	-0.01	1.94	0.00	-0.02	0.03	0.44	0.46
21	3.68	-0.02	1.63	-0.02	-0.02	0.03	0.38	0.43
22	3.77	-0.02	1.39	-0.02	-0.02	0.04	0.38	0.42
23	3.89	-0.01	1.15	0.00	-0.02	0.03	0.38	0.42
24	3.96	-0.01	0.98	-0.03	-0.02	0.02	0.33	0.38
25	4.02	-0.01	0.82	-0.01	-0.02	0.02	0.34	0.38
26	4.09	-0.02	0.71	-0.01	-0.02	0.04	0.32	0.37
27	4.12	-0.00	0.60	-0.03	-0.03	0.02	0.30	0.34
28	4.16	-0.01	0.51	-0.01	-0.02	0.02	0.32	0.34
29	4.22	-0.02	0.42	-0.02	-0.02	0.01	0.30	0.32
30	4.23	-0.03	0.36	-0.04	-0.03	0.03	0.28	0.30
31	4.27	-0.02	0.30	-0.01	-0.02	0.03	0.30	0.30
32	4.28	-0.02	0.25	-0.01	-0.02	0.01	0.29	0.29
33	4.31	-0.03	0.21	-0.02	-0.02	0.03	0.27	0.27
34	4.29	-0.02	0.19	-0.03	-0.03	0.02	0.27	0.26
35	4.31	-0.03	0.18	-0.01	-0.02	0.04	0.29	0.26
36	4.35	-0.01	0.14	-0.02	-0.02	0.03	0.26	0.26
37	4.35	-0.01	0.12	-0.04	-0.02	0.01	0.26	0.24
38	4.36	-0.02	0.09	-0.00	-0.02	0.01	0.28	0.24
39	4.38	-0.02	0.08	-0.02	-0.02	0.02	0.26	0.24
40	4.36	-0.02	0.06	-0.03	-0.02	0.01	0.25	0.21
41	4.37	-0.02	0.06	-0.01	-0.03	0.01	0.27	0.23
42	4.40	-0.02	0.05	-0.01	-0.02	0.00	0.26	0.22
43	4.38	-0.03	0.04	-0.03	-0.02	0.01	0.25	0.21
44	4.39	-0.01	0.03	-0.01	-0.03	0.02	0.26	0.21
45	4.39	-0.02	0.03	-0.01	-0.02	0.02	0.27	0.21
46	4.39	-0.01	0.02	-0.03	-0.02	0.04	0.24	0.19
47	4.36	-0.03	0.03	-0.02	-0.03	0.04	0.26	0.18
48	4.40	-0.02	0.02	-0.01	-0.03	0.05	0.27	0.19
49	4.38	-0.02	0.03	-0.03	-0.03	0.04	0.24	0.18
50	4.39	-0.01	0.01	-0.02	-0.02	0.01	0.25	0.19
51	4.39	-0.01	0.02	-0.02	-0.03	0.03	0.27	0.20
52	4.38	-0.02	0.01	-0.04	-0.02	0.05	0.24	0.17
53	4.38	-0.01	0.01	-0.02	-0.02	0.02	0.26	0.17
54	4.41	-0.02	-0.00	-0.00	-0.02	0.01	0.27	0.18
55	4.41	-0.02	0.00	-0.03	-0.03	0.01	0.24	0.16
56	4.38	-0.02	0.01	-0.03	-0.03	0.04	0.26	0.16
57	4.40	-0.03	0.00	-0.01	-0.03	0.04	0.26	0.16
58	4.38	-0.03	0.01	-0.03	-0.03	0.04	0.24	0.16
59	4.38	-0.02	0.00	-0.02	-0.03	0.01	0.26	0.16
60	4.39	-0.02	0.01	-0.02	-0.03	0.04	0.26	0.16
61	4.39	-0.02	0.01	-0.03	-0.03	0.01	0.24	0.16
62	4.36	-0.03	0.13	-0.01	-0.03	0.01	0.26	0.16
63	4.22	-0.03	0.78	-0.01	-0.03	0.04	0.27	0.15
64	3.86	-0.02	1.76	-0.02	-0.02	0.02	0.26	0.14
65	3.41	-0.03	2.78	0.00	-0.03	0.01	0.34	0.14
66	2.95	-0.02	3.93	0.01	-0.04	0.04	0.36	0.13
67	2.52	-0.03	4.83	0.01	-0.03	0.02	0.38	0.10
68	2.15	-0.02	5.62	0.03	-0.02	0.01	0.44	0.11
69	1.84	-0.01	6.21	0.04	-0.02	0.02	0.47	0.12
70	1.55	-0.03	6.80	0.04	-0.02	0.01	0.49	0.09
71	1.29	-0.03	7.36	0.05	-0.03	0.02	0.54	0.09
72	1.10	-0.03	7.82	0.07	-0.02	0.02	0.60	0.10
73	0.92	-0.04	8.25	0.06	-0.03	0.03	0.60	0.07
74	0.79	-0.03	8.54	0.07	-0.02	0.01	0.64	0.08
75	0.67	-0.02	8.78	0.09	-0.02	0.03	0.68	0.10
76	0.56	-0.03	9.05	0.07	-0.03	0.03	0.69	0.08
77	0.37	-0.02	9.55	0.08	-0.02	0.03	0.70	0.09
78	0.21	-0.01	9.81	0.11	-0.02	0.00	0.76	0.10
79	0.14	-0.02	9.90	0.09	-0.02	0.02	0.76	0.09
80	0.08	-0.02	10.00	0.09	-0.02	0.03	0.77	0.11
81	0.04	-0.02	10.00	0.09	-0.02	0.01	0.78	0.09
82	0.03	-0.02	10.00	0.10	-0.02	-0.00	0.82	0.12
83	0.04	-0.02	10.00	0.09	-0.02	0.03	0.81	0.11
84	0.01	-0.01	10.00	0.09	-0.03	0.05	0.80	0.11
END TIME:	13:46:55							
FULLSPAN	896.00	426.90	21.00	424.00	55.20	1000.00	2500.00	2500.00
SPAN VDC	8.79	0.86	10.00	4.36	0.60	1.01	2.48	2.50
MID SPAN	442.40	224.90	8.74	218.40	25.00	500.00	1000.00	0.00
MID VDC	4.42	0.43	4.17	2.17	0.25	0.48	0.78	0.01
ZERO GAS	0.00	0.00	0.00	0.00	0.00	0.00	0.00	0.00

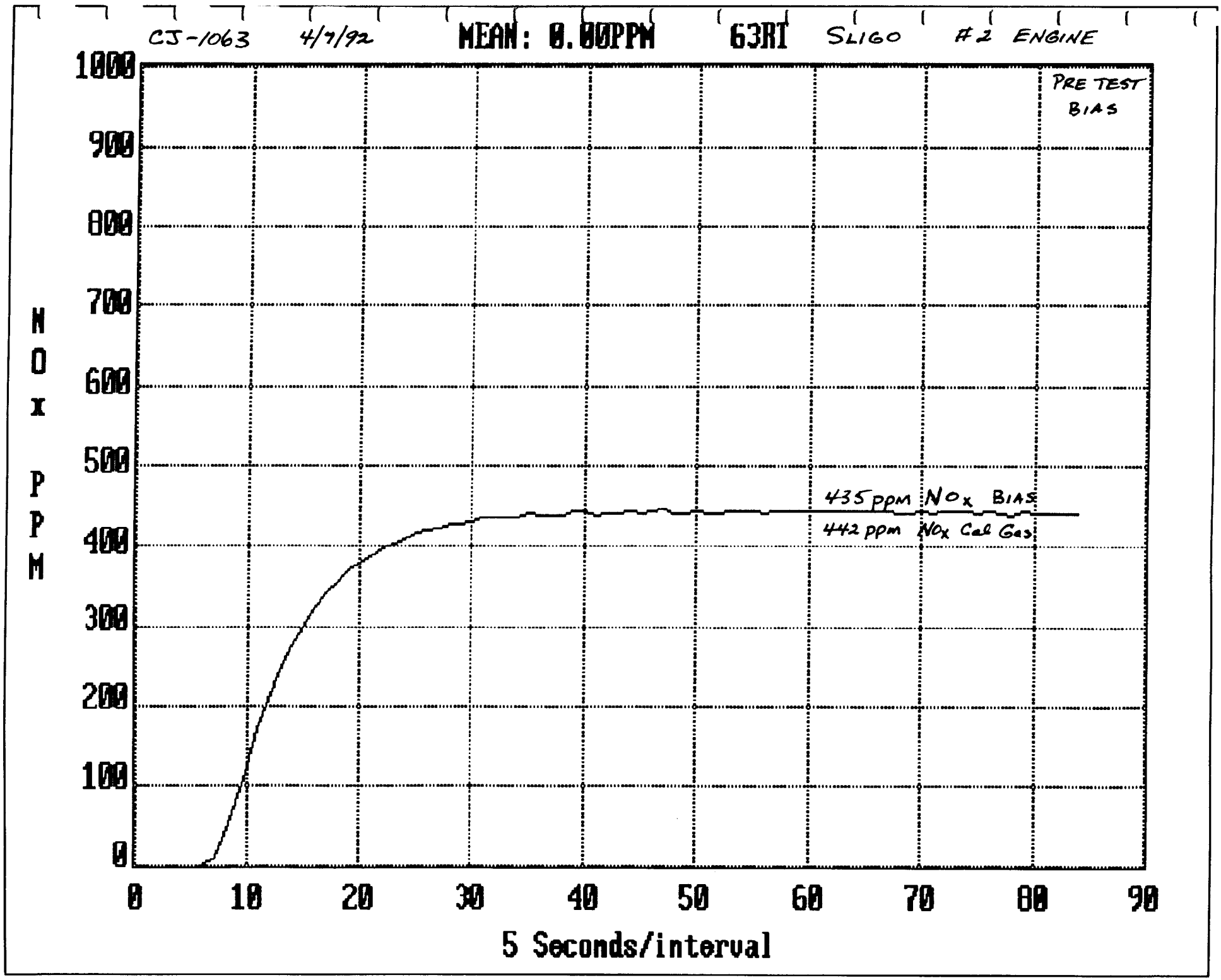
CJ-1063
4/7/92
MEAN: 0.00PPM
63RI
SLIGO
#2 ENGINE
PRE TEST BIAS
435 ppm NOx BIAS
442 ppm NOx Cal Gas
NOx PPM
1000
900
800
700
600
500
400
300
200
100
0
0
10
20
30
40
50
60
70
80
90
5 Seconds/interval

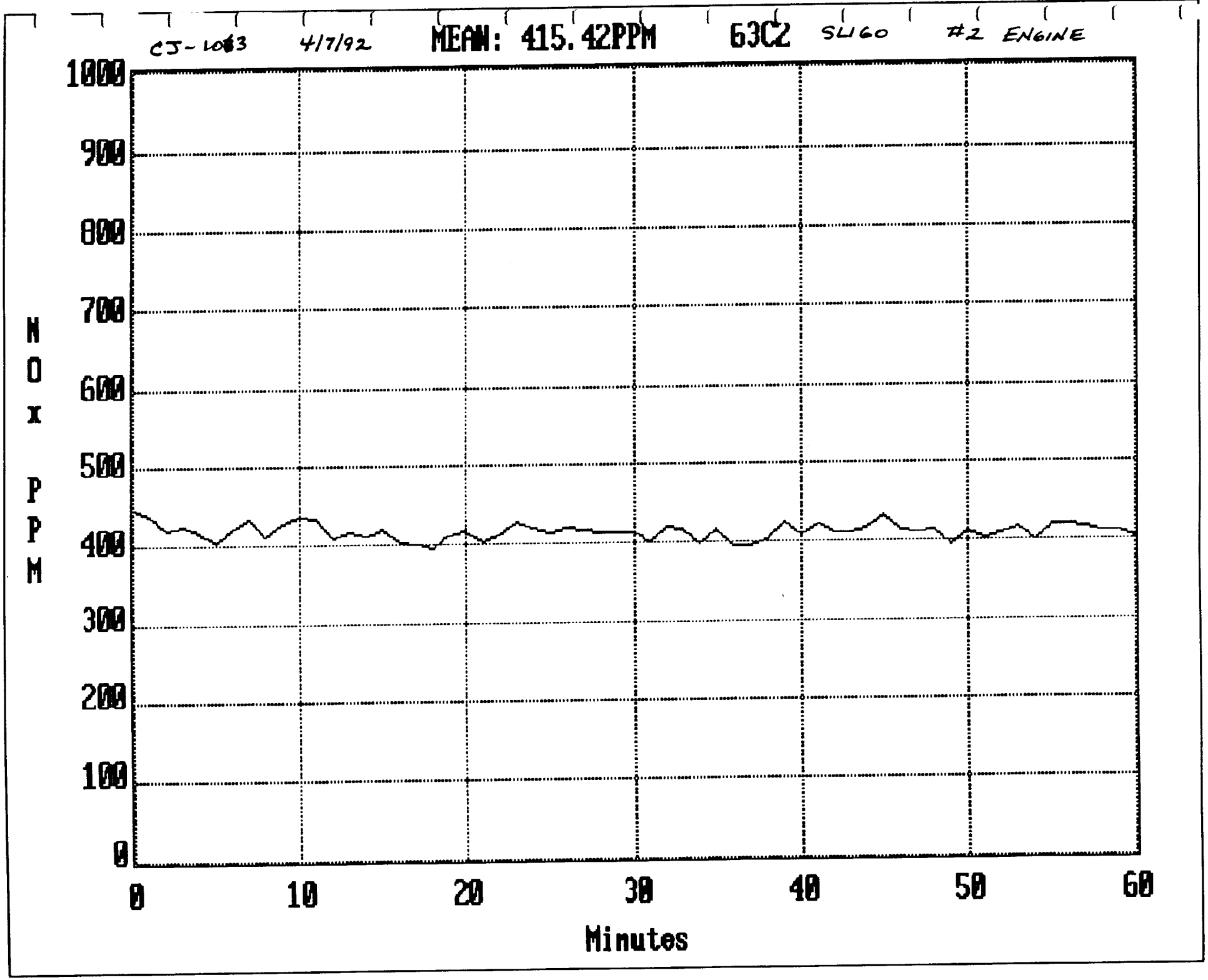
CJ-1083 4/7/92
MEAN: 415.42PPM
63C2 SLIGO #2 ENGINE
NOx PPM
1000
900
800
700
600
500
400
300
200
100
0
0
10
20
30
40
50
60
Minutes

CJ-1063 4/7/92 MEAN: 53.98PPM 63C2 SLIGO #2 ENGINE

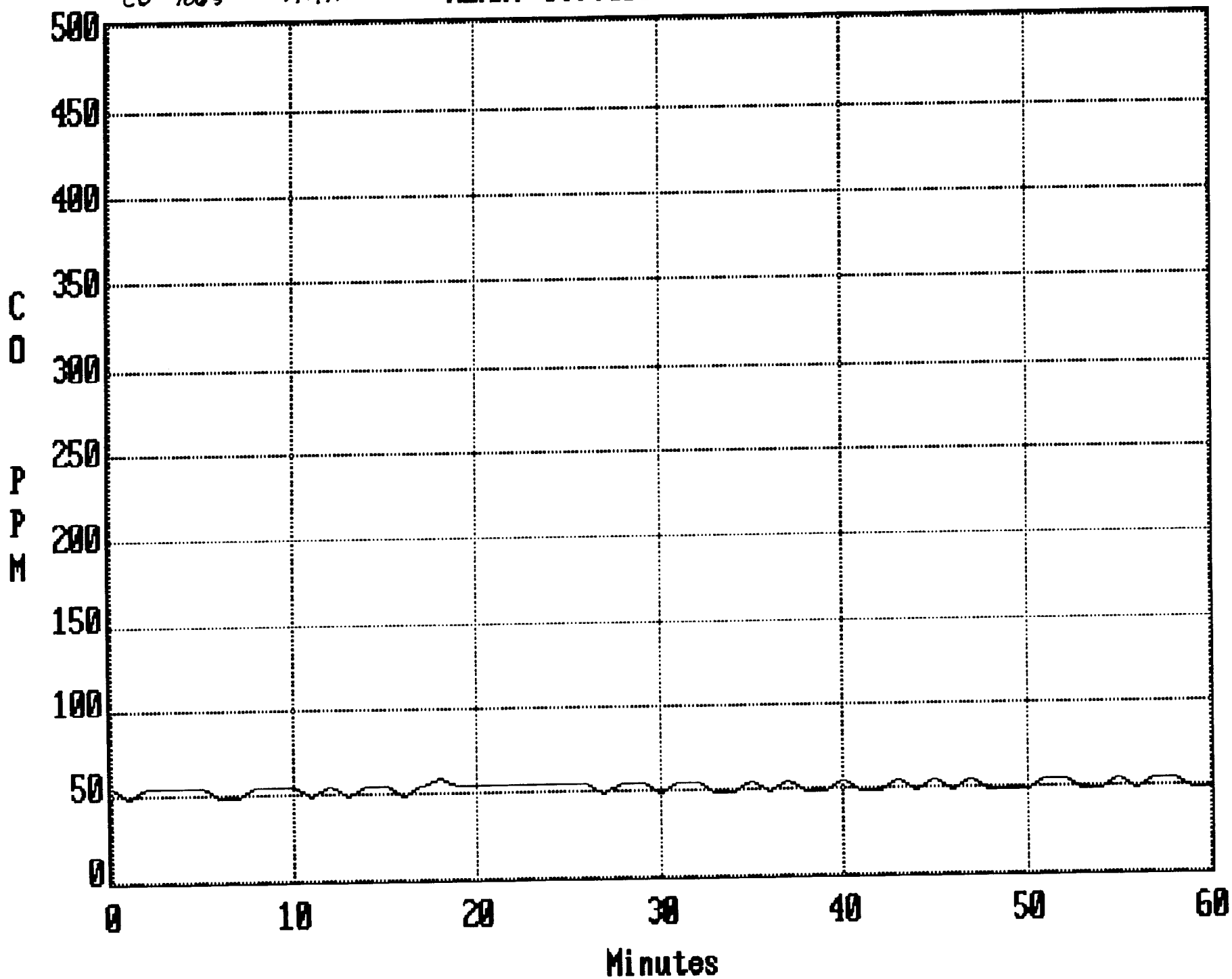

SLIGO/CJ-1063/#2 ENG C3

TEST DATE : 04-07-1992
START TIME: 12:01:01
FILE NAME : C:\DAQ\63C3 .ID%

CHANNEL#	NOx	CO	O2	SO2	THC	T1	T2	T3
CH.UNITS	PPM	PPM	%	PPM	PPM	F	F	F
<MIN>			<ANALYZER OUTPUT-VDC>					
0	4.56	0.10	7.39	0.07	-0.03	0.04	0.99	1.68
1	4.44	0.11	7.39	0.05	-0.02	0.02	0.41	1.25
2	4.26	0.11	7.42	0.05	-0.02	0.03	0.35	1.07
3	4.13	0.11	7.41	0.06	-0.03	0.03	0.36	0.98
4	4.23	0.11	7.40	0.05	-0.02	0.02	0.36	0.94
5	4.42	0.10	7.36	0.05	-0.03	0.02	0.37	0.92
6	4.24	0.10	7.39	0.06	-0.02	0.02	0.38	0.93
7	4.17	0.10	7.40	0.05	-0.03	0.03	0.38	0.89
8	4.20	0.10	7.37	0.05	-0.02	0.02	0.37	0.89
9	4.35	0.10	7.39	0.05	-0.03	0.03	0.38	0.75
10	4.12	0.11	7.38	0.06	-0.02	0.03	0.37	0.60
11	4.17	0.11	7.39	0.06	-0.03	0.02	0.38	0.53
12	4.31	0.11	7.36	0.05	-0.03	0.03	0.38	0.49
13	4.48	0.10	7.40	0.05	-0.02	0.03	0.39	0.53
14	4.32	0.10	7.38	0.05	-0.03	0.02	0.39	0.52
15	4.44	0.10	7.35	0.05	-0.02	0.03	0.39	0.51
16	4.46	0.10	7.33	0.06	-0.03	0.03	0.41	0.51
17	4.48	0.10	7.29	0.05	-0.03	0.03	0.41	0.49
18	4.32	0.10	7.34	0.04	-0.03	0.03	0.41	0.44
19	4.40	0.10	7.34	0.05	-0.03	0.03	0.42	0.43
20	4.33	0.10	7.34	0.05	-0.03	0.03	0.42	0.43
21	4.31	0.10	7.33	0.06	-0.02	0.02	0.43	0.43
22	4.17	0.11	7.36	0.05	-0.03	0.02	0.42	0.43
23	4.24	0.11	7.35	0.05	-0.03	0.04	0.44	0.49
24	4.19	0.10	7.36	0.05	-0.03	0.03	0.43	0.55
25	4.31	0.11	7.35	0.05	-0.02	0.03	0.44	0.56
26	4.34	0.10	7.36	0.06	-0.02	0.02	0.45	0.58
27	4.27	0.10	7.35	0.06	-0.02	0.02	0.45	0.65
28	4.35	0.11	7.35	0.05	-0.03	0.03	0.46	0.72
29	4.17	0.10	7.37	0.05	-0.03	0.03	0.46	0.73
30	4.14	0.11	7.37	0.06	-0.03	0.03	0.46	0.72
31	4.08	0.10	7.41	0.06	-0.02	0.02	0.47	0.71
32	4.32	0.10	7.34	0.05	-0.03	0.03	0.47	0.77
33	4.24	0.11	7.34	0.05	-0.02	0.03	0.47	0.84
34	4.19	0.10	7.37	0.05	-0.03	0.03	0.47	0.86
35	4.29	0.11	7.36	0.05	-0.03	0.03	0.48	0.90
36	4.27	0.10	7.32	0.05	-0.02	0.02	0.48	0.91
37	4.20	0.11	7.31	0.05	-0.03	0.03	0.48	0.91
38	4.36	0.10	7.31	0.05	-0.03	0.03	0.50	0.93
39	4.43	0.10	7.30	0.05	-0.03	0.03	0.50	0.94
40	4.39	0.10	7.31	0.05	-0.03	0.02	0.51	0.95
41	4.30	0.10	7.31	0.06	-0.03	0.03	0.51	0.95
42	4.17	0.10	7.32	0.05	-0.03	0.03	0.51	0.93
43	4.22	0.10	7.34	0.05	-0.03	0.02	0.51	0.93
44	4.23	0.11	7.36	0.06	-0.02	0.03	0.52	0.94
45	4.15	0.10	7.36	0.05	-0.03	0.04	0.52	0.92
46	4.01	0.10	7.39	0.05	-0.03	0.03	0.52	0.91
47	4.06	0.10	7.38	0.06	-0.02	0.02	0.52	0.90
48	4.26	0.11	7.36	0.05	-0.02	0.03	0.53	0.91
49	4.15	0.10	7.37	0.05	-0.02	0.03	0.53	0.91
50	4.23	0.10	7.39	0.05	-0.02	0.05	0.53	0.91
51	4.29	0.10	7.35	0.06	-0.03	0.02	0.55	0.93
52	4.20	0.09	7.42	0.05	-0.03	0.03	0.54	0.92
53	4.14	0.11	7.42	0.06	-0.03	0.02	0.55	0.91
54	4.07	0.11	7.41	0.06	-0.02	0.02	0.54	0.92
55	3.97	0.10	7.43	0.06	-0.03	0.03	0.55	0.89
56	3.96	0.10	7.48	0.06	-0.03	0.02	0.55	0.88
57	3.83	0.11	7.50	0.06	-0.03	0.03	0.54	0.86
58	3.86	0.11	7.51	0.06	-0.02	0.02	0.55	0.86
59	3.80	0.10	7.54	0.06	-0.03	0.03	0.55	0.85
60	3.78	0.10	7.51	0.06	-0.02	0.02	0.55	0.84
MEAN	4.23	0.10	7.38	0.05	-0.03	0.03	0.47	0.79
END TIME:	13:01:01							
FULLSPAN	896.00	426.90	21.00	424.00	55.20	1000.00	2500.00	2500.00
SPAN VDC	8.79	0.86	10.00	4.36	0.60	1.01	2.48	2.50
MID SPAN	442.40	224.90	8.74	218.40	25.00	500.00	1000.00	0.00
MID VDC	4.42	0.43	4.17	2.17	0.25	0.48	0.78	0.01
ZERO GAS	0.00	0.00	0.00	0.00	0.00	0.00	0.00	0.00
ZERO VDC	-0.02	-0.03	-0.02	-0.01	-0.01	0.00	0.00	0.00

CJ-1063 4/7/92 MEAN: 430.20PPM 63C3 SLIGO #2 ENGINE

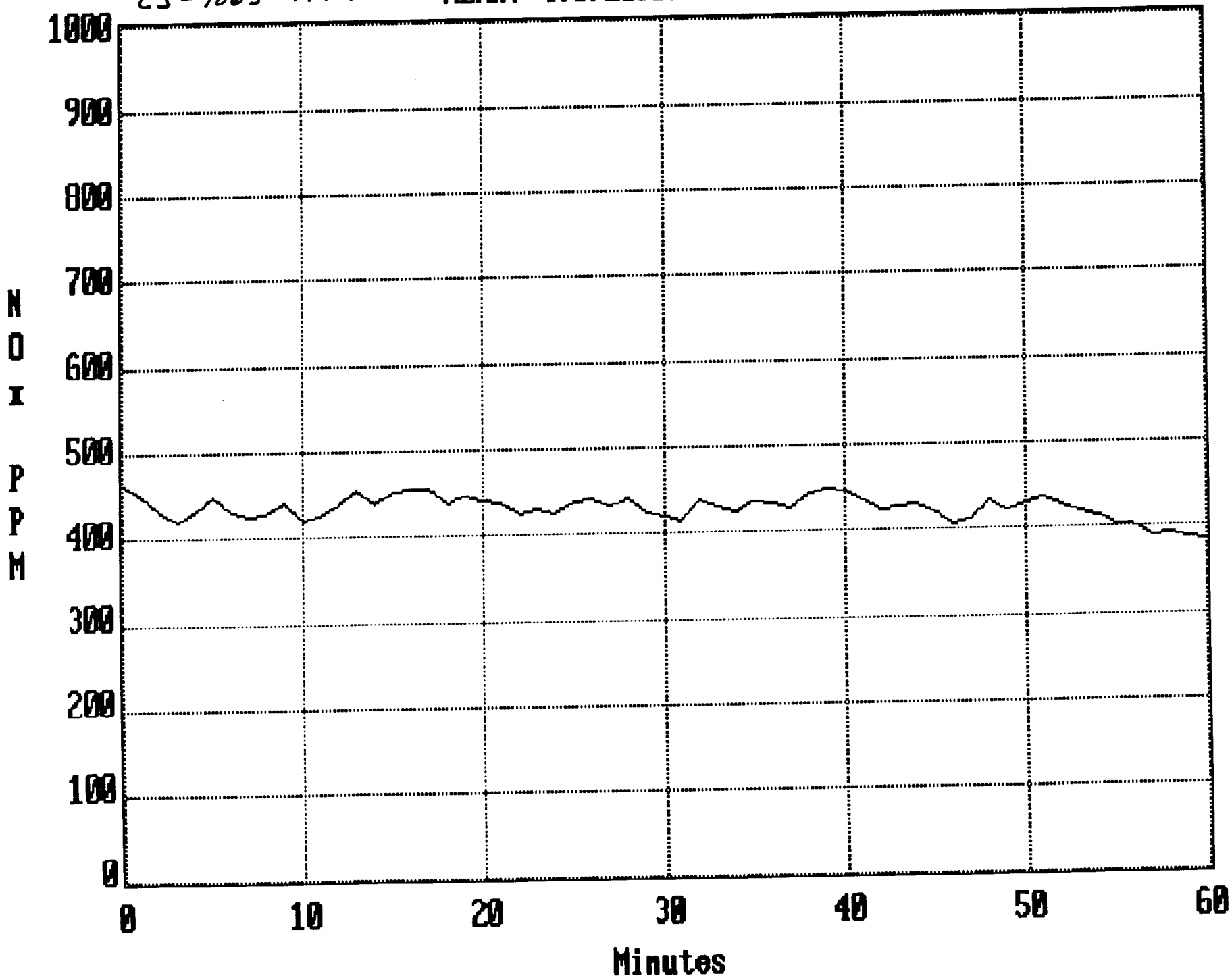

CJ-1063 4/7/92 MEAN: 47.97PPM 63C3 SLIGO #2 ENGINE

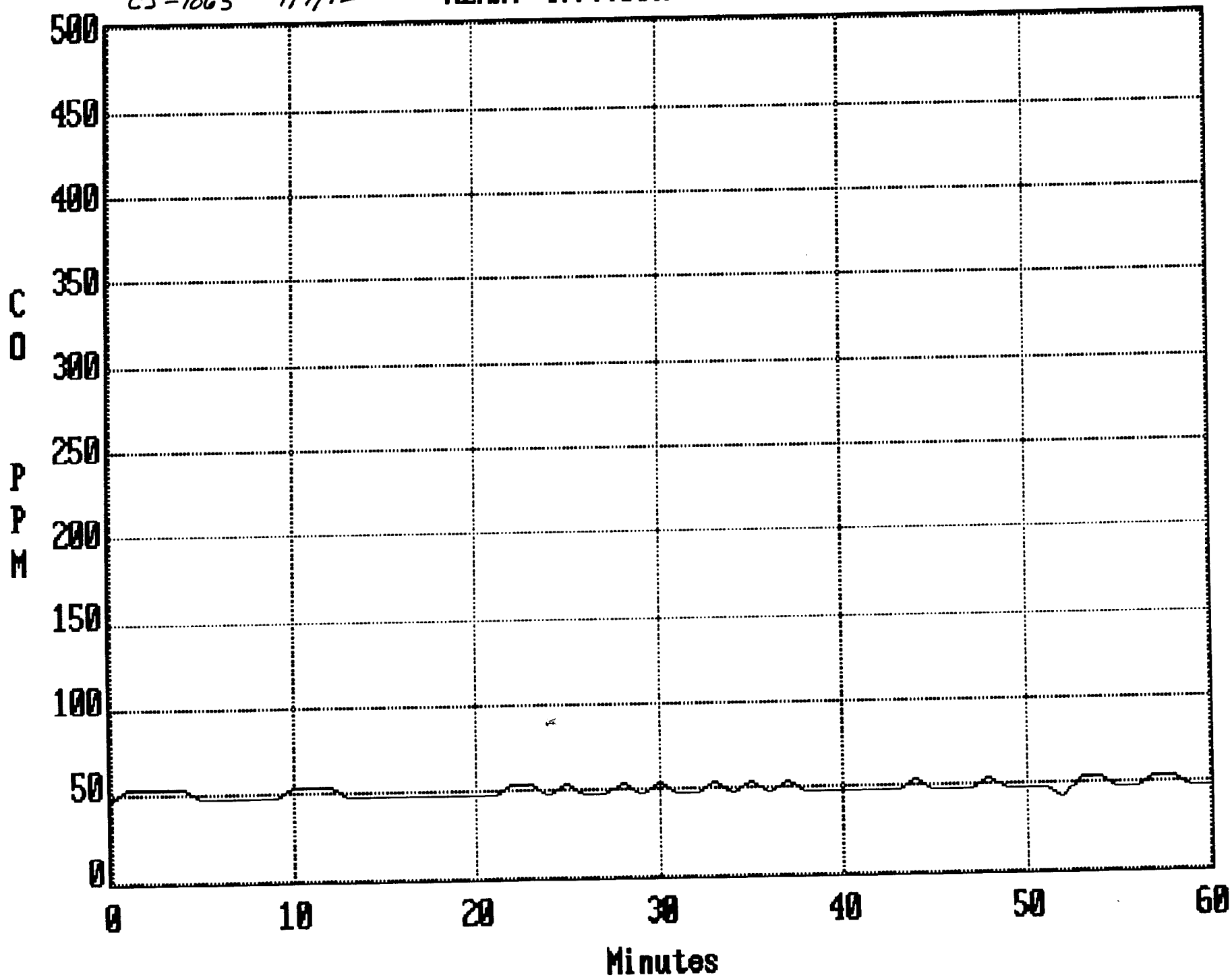

APPENDIX D

Calibration Data

CETCON
CONTROL MODULE CALIBRATION

Operator: RJS
C_F : 0.975

Control Module: CM−1
Serial Number: SGI #52
Calibration Date: January 10, 1992

DGM Orifice ΔH (in. H_2O)	0.5	1.0	2.0	4.0	5.0	AVG
Time, R (min.):	13:54	9:27	7:07	4:57	4:31	
Barometric Pressure P_B(in. Hg)	29.35	29.35	29.35	29.35	29.35	
Inlet Wet Meter (°F):						
Start T_W (in)	54	53	53	53	53	
Finish	53	53	53	53	53	
Average	53.5	53	53	53	53	
Outlet Wet Meter (°F):						
Start T_W (out)	54	58	63	67	68	
Finish	58	63	68	69	73	
Average	56	60.5	65.5	68	70.5	
Inlet DGM Dry Meter (°F):						
Start T_M (in)	54	58	63	67	68	
Finish	58	63	68	69	73	
Average	56	60.5	65.5	68	70.5	
Outlet DGM Dry Meter (°F):						
Start T_M (out)	52	53	53	54	54	
Finish	53	54	54	54	55	
Average	52.5	53.5	53.5	54	54.5	
Wet Test Meter:						
Finish	220.201	225.302	230.822	236.470	241.822	
Start	215.149	220.417	225.540	231.147	236.470	
V_W	5.052	4.885	5.282	5.323	5.352	
Dry Test Meter:						
Finish	691.610	696.839	702.465	708.225	713.686	
Start	686.425	691.837	697.084	702.796	708.225	
V_M	5.185	5.002	5.381	5.429	5.461	
C_F (w)	1.002	1.002	1.002	1.002	1.002	
C_F (1)	0.973	0.976	0.979	0.973	0.972	0.975
C_F (DEV) (2)	0.008	0.001	0.004	0.002	0.003	
T_W (°F) (3)	55	57	59	61	62	
T_M (°F) (4)	54	57	59	61	63	
T_M (out) (°F)	53	53	53	54	55	
V_M (scf)	5.185	5.002	5.381	5.429	5.461	
V_W (scf)	5.052	4.885	5.282	5.323	5.352	
ΔH_{std} (in. w.c) (5)	2.113	2.106	2.060	1.973	2.035	2.057
ΔH DEV (6)	+0.05	+0.05	+0.003	−0.08	−0.02	

1. $C_F = [V_W P_B (T_M + 460)] / [V_M (P_B + \Delta H / 13.6)(T + 460)] \cdot CF_W$
2. Allowable Deviation from average C_F (± 0.02 of average).
3. $T_W = (T_W (in) + T_W (out)) / 2$
4. $T_M = (T_M (in) + T_M (out)) / 2$
5. $\Delta H_{std} = [0.0317 \Delta H / (P_B (T_M out + 460))] \cdot [(T_W + 460) R / V_W]^2$
6. ΔH_{std} DEV orifice pressure differential that equates to 0.75 cfm of air @ std conditions 68 °F, 29.92 in. Hg. (allowable deviation ± 0.2 from avg.)

Note: CF_W is meter factor for standard DGM calibrated against wet test meter @ Carl Poe.

CM1CAL.WK1

1T10-92
RJS

LOGARITHMIC • 2 X 3 CYCLES
L & E
O. MAD

46 7323

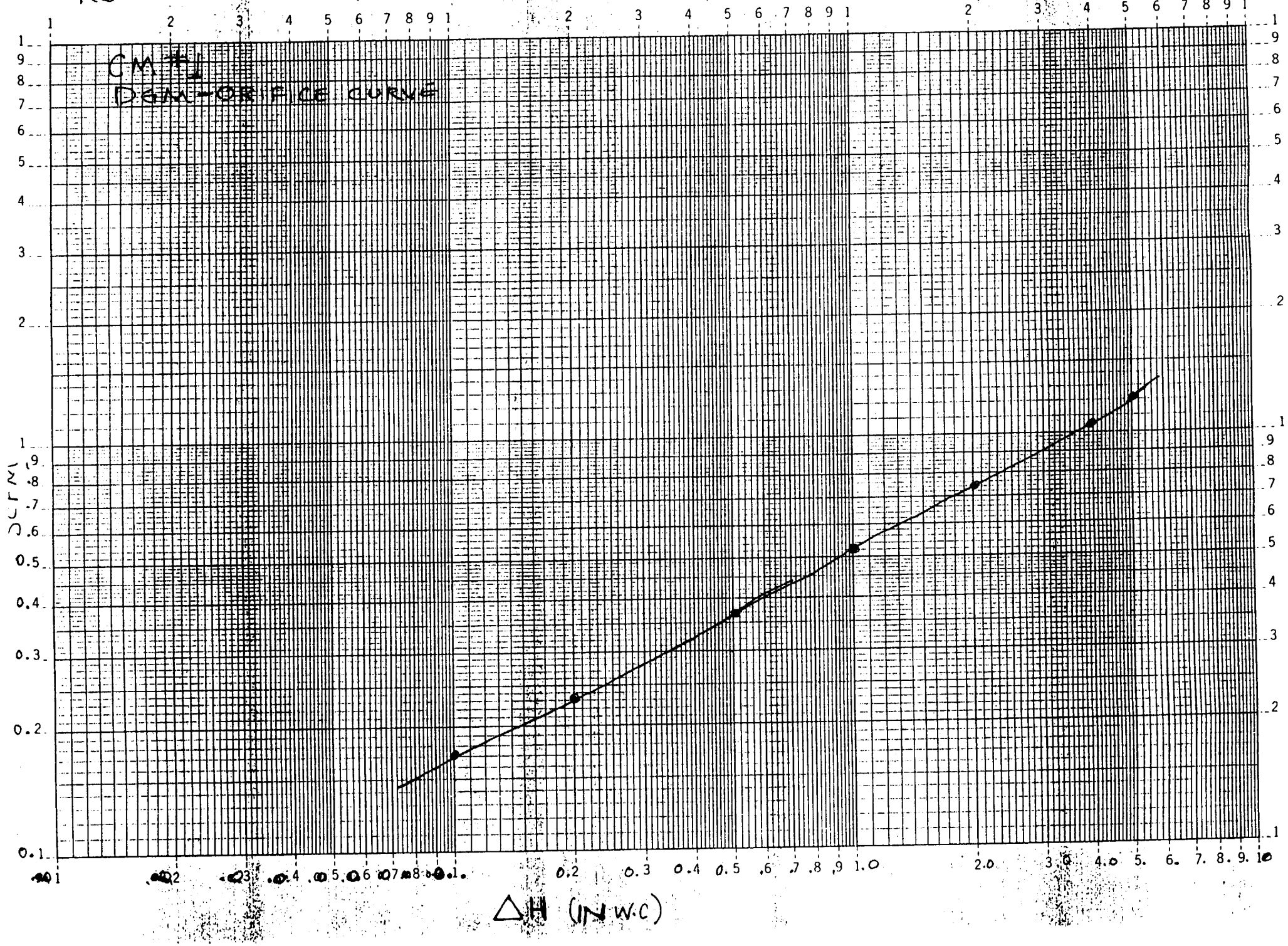

DIGITAL TEMPERATURE INDICATOR NO: CM-1

CALIBRATION DATA

DATE: 9/4/91

MEDIA	TIME	MERCURY THERMOMETER (°F)	DTI (°F)
ICE BATH	1040	33	32
AMBIENT AIR	1037	69	67
BOILING WATER			
Pitot #1	1017	198	201
Pitot #2	1023	199	200
Pitot #3	1030	204	207
Heated Filter Holder	1052	206	200
Heated Filter Holder	1104	269	264
Heated Filter Holder	1115	310	307

METER ADJUSTED? YES _____ NO x

Andrew J. Williams

SIGNATURE OF CALIBRATOR

CETCON

Pitot Tube No:	1
Length, ft.:	3
P_B (in. Hg):	29.3 / 50° F
$P_A + P_B$, in.:	0.653
D_t, in.:	0.25

C_{Pstd}:	0.99 (18" probe)
C_P:	0.795
Cal. Date:	1–9–92
Due Date:	7–9–92
Calibrator:	AJW / RJS

	Run No.	Target ΔP_{std} (in. w.c.)	Target Velocity (fpm)	Std Pitot ΔP_{std} (in. w.c.)	S–Type ΔP_s (in. w.c.)	C_P (1)	Deviation From Mean (2)
High Side (A)	1	0.25	2000	0.43	0.29	0.81	
	2	0.30	2200	0.51	0.34	0.81	
	3	0.35	2350	0.56	0.36	0.79	
	4						
	Avg					0.800	
Low Side (B)	1	0.25	2000	0.45	0.29	0.79	
	2	0.30	2200	0.53	0.34	0.79	
	3	0.35	2350	0.55	0.36	0.80	
	4						
	Avg					0.790	

SUMMARY

C_P avg. (A)	C_P avg. (B)	C_P (3)	$\lvert C_P$ avg. (A) – C_P avg. (B)$\rvert$ (4)	DEV avg. (A)	DEV avg. (B)
0.800	0.790	0.795	0.01		

1. $C_P = C_{Pstd} (\Delta P_{std} / \Delta P_s)^{1/2}$
2. Deviation = C_P (i) – C_P avg. (A or B) Note: Used when calibrating at a single velocity.
3. $C_P = [C_P \text{ avg. (A)} + C_P \text{ avg. (B)}] / 2$
4. $\lvert C_P \text{ avg. (A)} - C_P \text{ avg. (B)} \rvert$ (Must Be <= 0.01)

CETCON

ANALYZER DATA

DATE: April 7, 1992
PLANT: ARCO – Sligo Facility
UNIT: #2 Engine
JOB #: CJ–1063

	SO_2	NO_X	CO	O_2	THC	METHOD 20 NO_X	METHOD 20 O_2
ANALYZER MODEL		TECO 10S	TECO 48				
ANALYZER SN		30759–238	30892–239				
SPAN GAS (PPM)		442.4					
ACTUAL (PPM)		439.0	NA				
SYSTEM BIAS (% SPAN)		0.7					
ZERO DRIFT (%)		0.0	0.0				
ALLOWABLE %		3.0	3.0				
FINAL CAL DRIFT %		0.1	0.6				
LEAK CHECK		<0.01 SCFH	<0.01 SCFH				
CAL GASES HIGH		896.0	426.9				
MID		442.4	224.9				
LOW		NA	NA				
ZERO		N_2	N_2				
RESPONSE TIME: (MIN.)		3.5					
90% RESPONSE TIME: (MIN.)		1.8					

CEDAQ-ANALYZER RESPONSE TIME TEST (each interval=5 sec.)

END TIME: 04-07-1992
START TIME:07:28:03
FILE NAME:C:\DAQ\TEST.ID%
TEST NAME:SLIGO/CJ-1063/#2 ENGINE BIAS C

CHANNEL#	NOx	CO	O2	SO2	THC	T1	T2	T3
CH.UNITS	PPM	PPM	%	PPM	PPM	F	F	F
0	-0.01	-0.03	10.00	0.11	-0.02	0.02	1.04	2.92
1	-0.02	-0.02	10.00	0.08	-0.02	0.04	0.49	2.41
2	-0.02	-0.01	10.00	0.10	-0.02	0.03	0.39	2.02
3	-0.01	-0.02	10.00	0.11	-0.02	0.01	0.38	1.70
4	-0.02	-0.04	10.00	0.08	-0.03	0.03	0.33	1.42
5	-0.02	-0.03	10.00	0.10	-0.02	0.00	0.36	1.20
6	0.00	-0.01	10.00	0.11	-0.03	0.02	0.36	1.03
7	0.06	-0.03	9.65	0.07	-0.03	0.03	0.33	0.86
8	0.38	-0.03	8.74	0.07	-0.03	0.03	0.33	0.75
9	0.79	-0.02	7.82	0.05	-0.03	0.02	0.29	0.65
10	1.22	-0.02	6.84	0.05	-0.02	0.00	0.30	0.60
11	1.68	-0.02	5.92	0.03	-0.02	0.02	0.26	0.56
12	2.03	-0.02	5.00	0.01	-0.03	0.03	0.23	0.51
13	2.39	-0.02	4.33	0.03	-0.03	0.03	0.25	0.50
14	2.70	-0.03	3.61	0.00	-0.03	0.03	0.21	0.50
15	2.92	-0.02	2.99	-0.01	-0.03	0.04	0.20	0.47
16	3.15	-0.02	2.52	0.00	-0.03	0.03	0.22	0.49
17	3.36	-0.02	2.14	-0.01	-0.02	0.01	0.17	0.49
18	3.48	-0.01	1.83	-0.01	-0.02	0.01	0.18	0.49
19	3.63	-0.02	1.56	0.00	-0.02	0.02	0.20	0.50
20	3.72	-0.03	1.31	-0.03	-0.03	0.04	0.16	0.50
21	3.80	-0.02	1.09	-0.01	-0.03	0.02	0.18	0.50
22	3.90	-0.03	0.91	-0.01	-0.03	0.03	0.17	0.51
23	3.96	-0.01	0.77	-0.03	-0.03	0.02	0.15	0.51
24	4.01	-0.03	0.67	-0.01	-0.03	0.03	0.18	0.53
25	4.08	-0.02	0.56	-0.02	-0.03	0.01	0.16	0.53
26	4.10	-0.02	0.46	-0.03	-0.03	0.02	0.15	0.52
27	4.14	-0.02	0.40	-0.00	-0.02	0.03	0.17	0.55
28	4.18	-0.02	0.33	-0.02	-0.03	0.03	0.15	0.54
29	4.19	-0.01	0.28	-0.03	-0.02	0.01	0.14	0.54
30	4.21	-0.02	0.24	-0.01	-0.03	0.02	0.17	0.55
31	4.25	-0.03	0.21	-0.02	-0.03	0.01	0.16	0.55
32	4.27	-0.01	0.16	-0.02	-0.02	0.01	0.15	0.55
33	4.26	-0.03	0.15	-0.04	-0.03	0.05	0.14	0.55
34	4.27	-0.03	0.12	-0.01	-0.02	0.04	0.17	0.55
35	4.31	-0.02	0.10	-0.02	-0.02	0.03	0.15	0.56
36	4.29	-0.01	0.09	-0.03	-0.03	0.03	0.13	0.55
37	4.29	-0.03	0.08	-0.02	-0.03	0.04	0.15	0.55
38	4.30	-0.02	0.07	-0.02	-0.03	0.04	0.16	0.56
39	4.33	-0.03	0.05	-0.03	-0.03	0.02	0.14	0.55
40	4.33	-0.03	0.05	-0.03	-0.02	0.04	0.14	0.57
41	4.30	-0.02	0.04	-0.03	-0.03	0.04	0.13	0.56
42	4.31	-0.02	0.03	-0.01	-0.03	0.04	0.16	0.56
43	4.32	-0.03	0.03	-0.02	-0.03	0.04	0.16	0.56
44	4.33	-0.02	0.03	-0.04	-0.02	0.03	0.13	0.55
45	4.32	-0.02	0.01	-0.01	-0.03	0.02	0.14	0.55
46	4.34	-0.02	0.00	-0.00	-0.02	0.02	0.16	0.57
47	4.36	-0.02	0.00	-0.02	-0.02	0.02	0.14	0.56
48	4.32	-0.02	0.01	-0.04	-0.03	0.04	0.13	0.55
49	4.32	-0.03	0.00	-0.01	-0.03	0.01	0.16	0.55
50	4.35	-0.02	0.01	-0.01	-0.02	0.03	0.15	0.57
51	4.32	-0.03	0.00	-0.03	-0.03	0.03	0.14	0.54
52	4.31	-0.03	0.01	-0.03	-0.03	0.04	0.14	0.55
53	4.34	-0.02	0.00	-0.01	-0.02	0.01	0.16	0.56
54	4.34	-0.02	0.01	-0.03	-0.03	0.04	0.14	0.55
55	4.33	-0.01	0.00	-0.03	-0.02	0.02	0.13	0.55
56	4.32	-0.02	0.01	-0.01	-0.02	0.02	0.16	0.56
57	4.35	-0.03	0.00	-0.02	-0.01	0.02	0.16	0.56
58	4.33	-0.02	0.00	-0.04	-0.02	0.03	0.13	0.54
59	4.33	-0.02	0.00	-0.02	-0.03	0.02	0.14	0.55
60	4.35	-0.01	-0.00	-0.01	-0.02	0.01	0.16	0.57
61	4.35	-0.02	-0.01	-0.02	-0.02	0.01	0.14	0.56
62	4.33	-0.01	0.00	-0.04	-0.02	0.02	0.13	0.54
63	4.34	-0.02	-0.00	-0.01	-0.02	0.02	0.16	0.56
64	4.35	-0.02	-0.00	-0.02	-0.02	0.02	0.13	0.56
65	4.33	-0.02	-0.00	-0.03	-0.01	0.00	0.14	0.54
66	4.33	-0.02	-0.00	-0.01	-0.03	0.02	0.17	0.56
67	4.34	-0.02	0.00	-0.02	-0.03	0.03	0.14	0.54
68	4.31	-0.02	0.00	-0.02	-0.03	0.03	0.14	0.54
69	4.32	-0.03	0.00	-0.01	-0.03	0.04	0.16	0.55
70	4.34	-0.01	-0.00	-0.02	-0.02	0.02	0.14	0.55
71	4.32	-0.02	0.00	-0.02	-0.03	0.01	0.14	0.54
72	4.33	-0.01	0.00	-0.01	-0.03	0.04	0.16	0.55
73	4.34	-0.02	0.01	-0.03	-0.03	0.04	0.14	0.54
74	4.34	-0.02	-0.00	-0.03	-0.02	0.01	0.14	0.54
75	4.32	-0.01	0.00	-0.01	-0.02	0.02	0.15	0.56
76	4.35	-0.02	-0.00	-0.01	-0.02	0.02	0.15	0.55
77	4.32	-0.01	-0.00	-0.03	-0.02	0.00	0.13	0.54
78	4.30	-0.02	0.00	-0.02	-0.03	0.03	0.14	0.54
79	4.34	-0.02	0.00	-0.01	-0.03	0.03	0.16	0.55
80	4.32	-0.03	0.01	-0.03	-0.02	0.04	0.13	0.53
81	4.32	-0.02	-0.00	-0.02	-0.02	0.02	0.15	0.55
82	4.32	-0.02	0.00	-0.01	-0.02	0.03	0.16	0.55
83	4.31	-0.02	0.00	-0.03	-0.03	0.03	0.13	0.54
84	4.32	-0.02	0.01	-0.03	-0.03	0.03	0.14	0.53
END TIME:	07:34:59							
FULLSPAN	896.00	426.90	21.00	424.00	55.20	1000.00	2500.00	2500.00
SPAN VDC	8.78	0.84	10.00	4.36	0.60	1.01	2.48	2.50
MID SPAN	442.40	224.90	8.74	218.40	25.00	500.00	1000.00	0.00
MID VDC	4.40	0.43	4.17	2.17	0.25	0.48	0.78	0.01
ZERO GAS	0.00	0.00	0.00	0.00	0.00	0.00	0.00	0.00

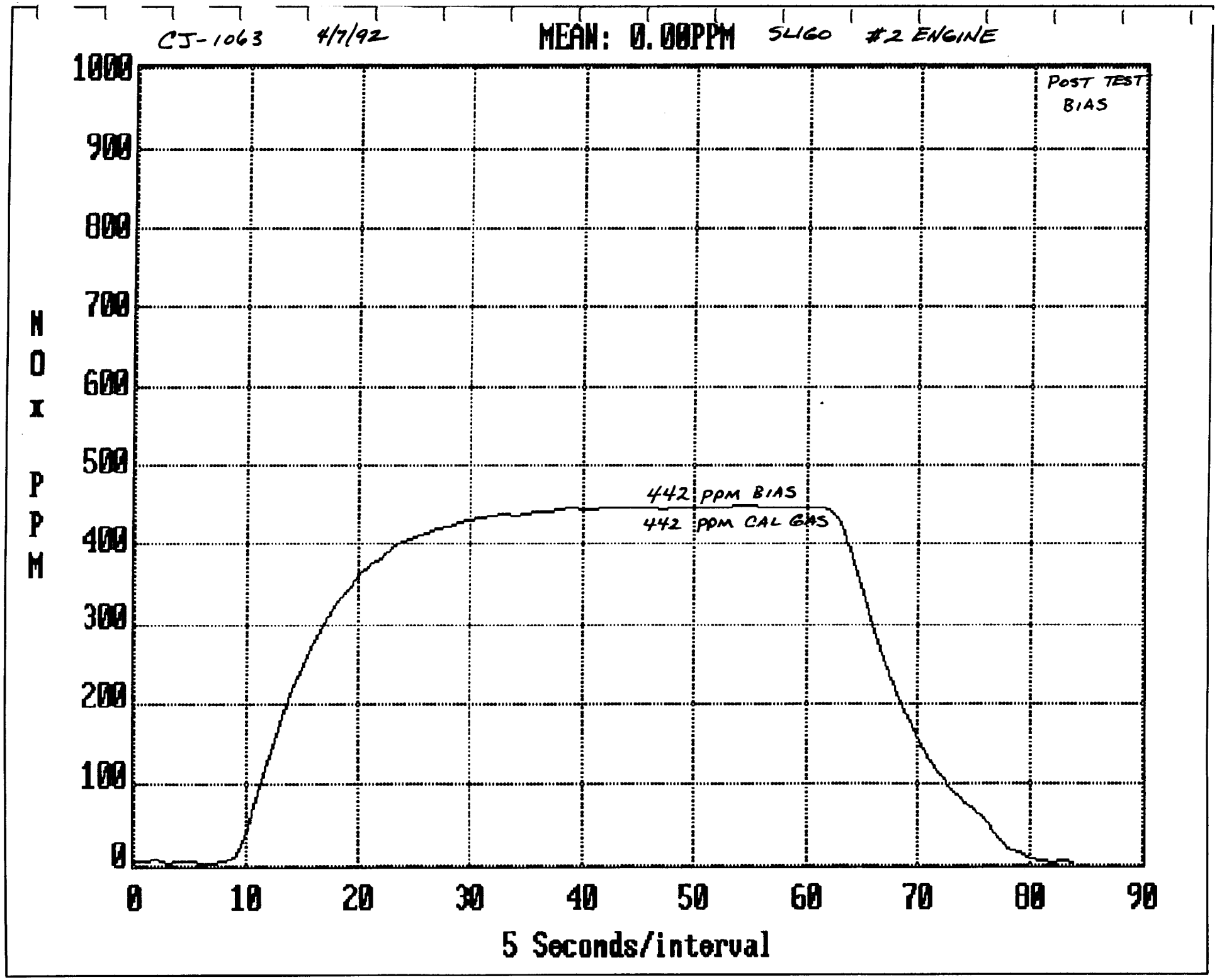
CJ-1063 4/7/92
MEAN: 0.00PPM
SLIGO #2 ENGINE
POST TEST BIAS
442 PPM BIAS
442 PPM CAL GAS
NOx PPM
1000
900
800
700
600
500
400
300
200
100
0
0
10
20
30
40
50
60
70
80
90
5 Seconds/interval

CETCON

DATE: April 7, 1992
PLANT: ARCO – Sligo Facility
UNIT: #2 Engine
JOB #: CJ–1063
OPERATOR GLM

CALIBRATION GASES and ANALYZER RESPONSE

ANALYZER
MODEL: TECO 10S
SN: 30759–238

		Gas Concentration (indicate units)		
		Zero [a]	Mid–range [b]	High–range [c]
Sample run:				
1.	C1	0.0	442.0	880.0
2.	C2	0.0	442.0	880.0
3.	C3	0.0	442.0	884.0
Average		0.0	442.0	881.0
Maximum percent deviation		0.0	0.04	1.5

[a] Average must be less than 0.25 percent of span.
[b] Average must be 50 to 60 percent of span.
[c] Average must be 80 to 90 percent of span.

ANALYZER CALIBRATION DRIFT DATA

Run number: C1, C3A Span: 0–1000 ppm NO_x

		Cylinder ID#	Cal Gas Value	Initial values		Final values		
				Analyzer calibration response	Analyzer cal. bias (percent of span)	Analyzer calibration response	Analyzer cal. bias (percent of span)	Drift (percent of span)
Zero gas	N_2	ALM–013056	0.0	0.0	0.0	0.0	0.0	0.0
Mid range	NO	ALM–023015	442.4	442.0	0.04	443.0	0.06	0.1
High range	NO	ALM–022983	896.0	880.0	–1.6	882.0	–1.4	0.2

$$\text{Analyzer Bias} = \frac{\text{Analyzer Cal. Response} - \text{Span gas value}}{\text{Span}} \times 100$$

$$\text{Drift} = \frac{\text{Final Analyzer Cal. Response} - \text{Initial Analyzer Cal. Response}}{\text{Span}} \times 100$$

SYSTEM CALIBRATION BIAS AND DRIFT DATA

Run number: 63 RT, 63RT1 Span: 0–1000 ppm NO_x

		Analyzer calibration response	Initial values		Final values		
			System calibration response	System cal. bias (percent of span)	System calibration response	System cal. bias (percent of span)	Drift (percent of span)
Zero gas	N_2	0.0	0.0	0.0	0.0	0.0	0.0
Upscale gas	442.4	442.0	435.0	–0.7	442.0	0.0	0.7

$$\text{System Calibration Bias} = \frac{\text{System Cal. Response} - \text{Analyzer Cal.Response}}{\text{Span}} \times 100$$

$$\text{Drift} = \frac{\text{Final System Cal. Response} - \text{Initial System Cal. Response}}{\text{Span}} \times 100$$

CJ-1063 4/7/92 CALIBRATION CURVE 63C1 SLIGO #2 ENGINE

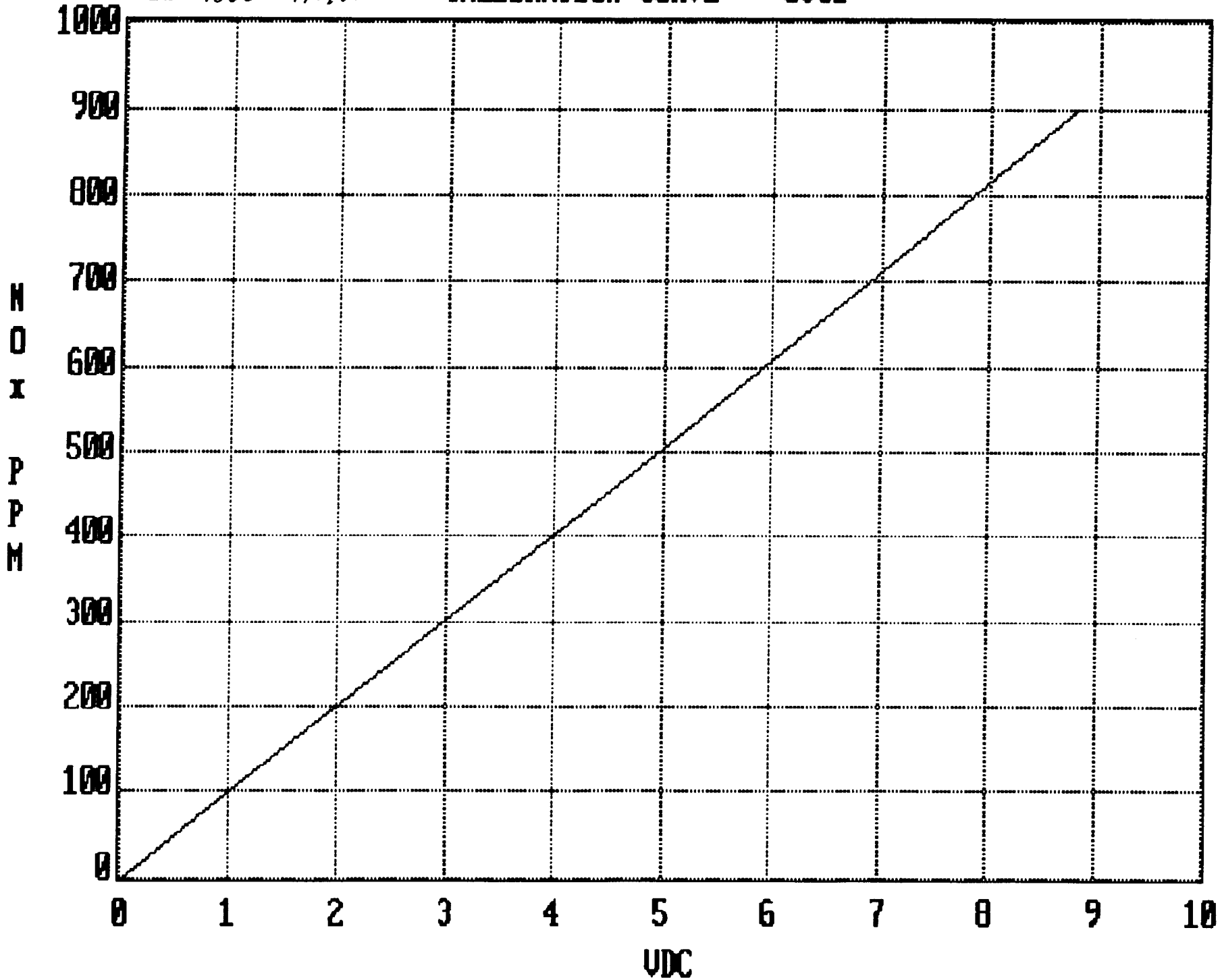

CJ-1063 4/7/92 CALIBRATION CURVE 63C2 SLIGO #2 ENGINE

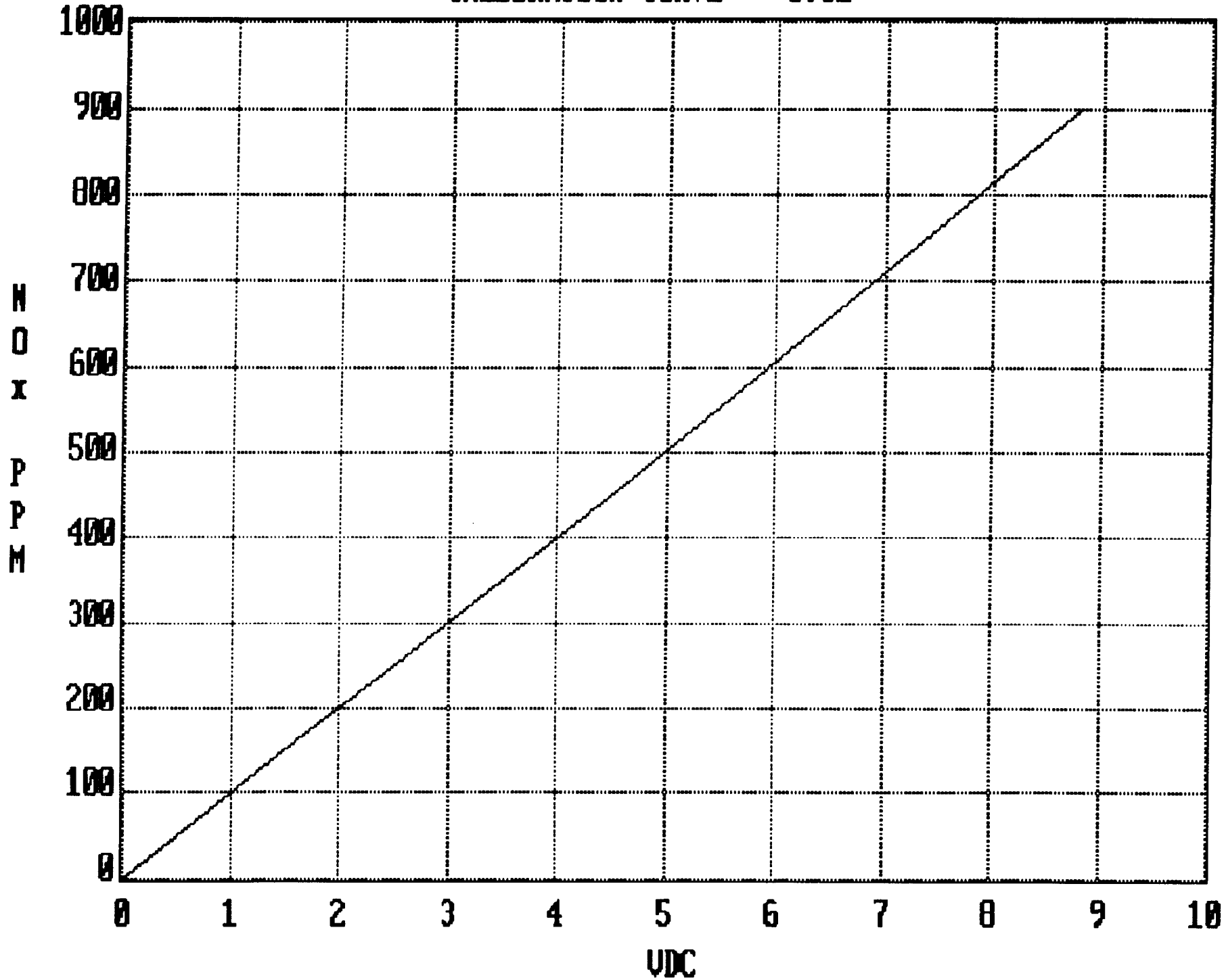

CJ-1063 4/7/92

CALIBRATION CURVE 63C3 SLIGO #2 ENGINE

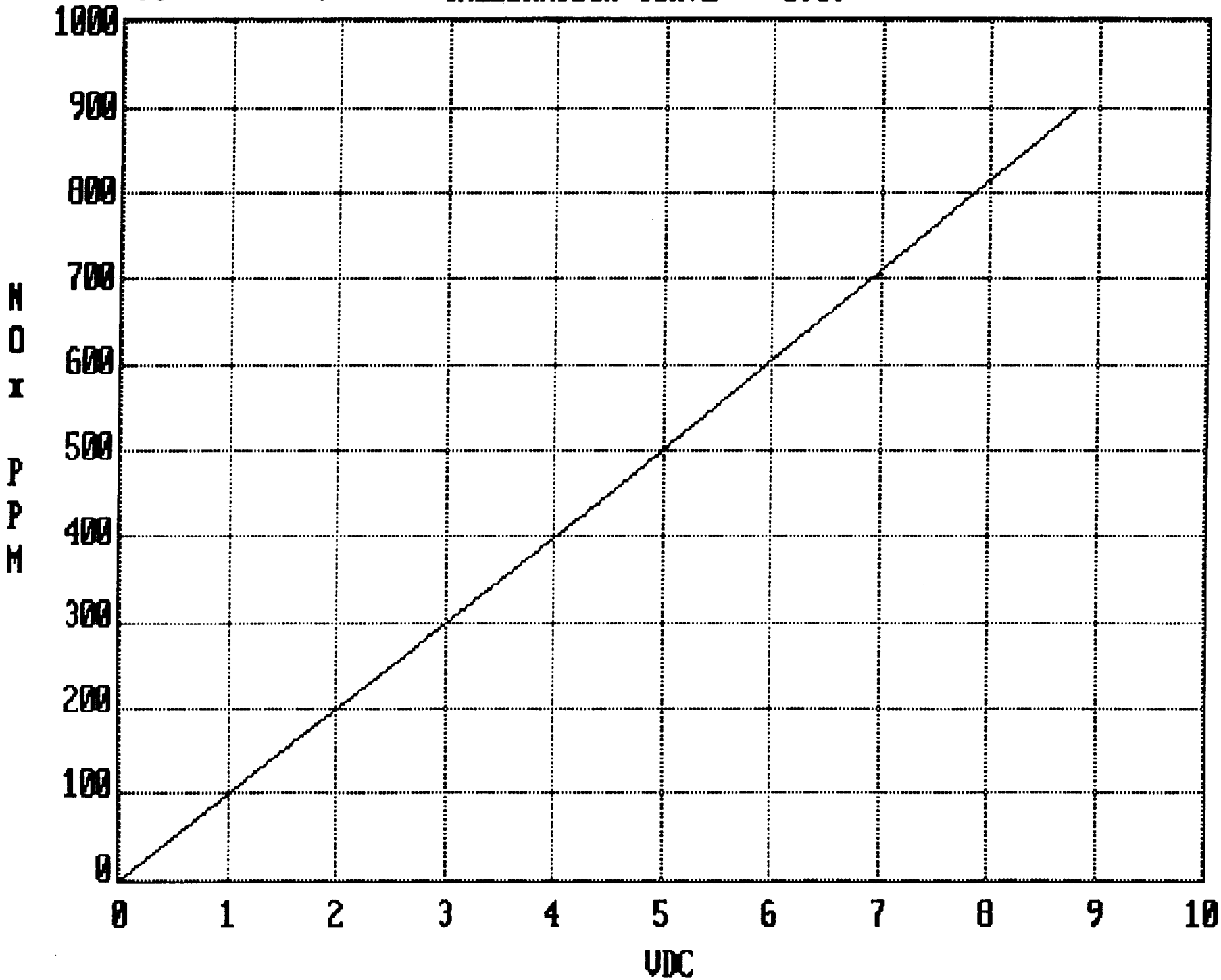

CETCON

DATE: April 7, 1992
PLANT: ARCO – Sligo Facility
UNIT: #2 Engine
JOB #: CJ–1063
OPERATOR GLM

CALIBRATION GASES and ANALYZER RESPONSE

ANALYZER
MODEL: TECO 48
SN: 30892–239

		Gas Concentration (indicate units)		
		Zero [a]	Mid–range [b]	High–range [c]
Sample run:				
1.	C1	0.0	225.0	433.0
2.	C2	0.0	225.0	433.0
3.	C3	0.0	225.0	433.0
Average		0.0	225.0	433.0
Maximum percent deviation		0.0	0.02	1.2

[a] Average must be less than 0.25 percent of span.
[b] Average must be 50 to 60 percent of span.
[c] Average must be 80 to 90 percent of span.

ANALYZER CALIBRATION DRIFT DATA

Run number: C1, C3A Span: 500 ppm CO

		Cylinder ID#	Cal Gas Value	Initial values: Analyzer calibration response	Initial values: Analyzer cal. bias (percent of span)	Final values: Analyzer calibration response	Final values: Analyzer cal. bias (percent of span)	Drift (percent of span)
Zero gas	N_2	ALM–013056	0.0	0.0	0.0	0.0	0.0	0.0
Mid range	CO	ALM–011438	224.9	225.0	0.02	228.0	0.6	0.6
High range	CO	ALL–8628	426.9	433.0	1.2	436.0	1.8	0.6

$$\text{Analyzer Bias} = \frac{\text{Analyzer Cal. Response} - \text{Span gas value}}{\text{Span}} \times 100$$

$$\text{Drift} = \frac{\text{Final Analyzer Cal. Response} - \text{Initial Analyzer Cal. Response}}{\text{Span}} \times 100$$

SYSTEM CALIBRATION BIAS AND DRIFT DATA

Run number: 63 RT, 63RT1 Span: 500 ppm CO

		Analyzer calibration response	Initial values: System calibration response	Initial values: System cal. bias (percent of span)	Final values: System calibration response	Final values: System cal. bias (percent of span)	Drift (percent of span)
Zero gas	N_2	0.0	NA	NA	NA	NA	NA
Upscale gas	224.9	225.0	NA	NA	NA	NA	NA

$$\text{System Calibration Bias} = \frac{\text{System Cal. Response} - \text{Analyzer Cal.Response}}{\text{Span}} \times 100$$

$$\text{Drift} = \frac{\text{Final System Cal. Response} - \text{Initial System Cal. Response}}{\text{Span}} \times 100$$

CALGAS6.WK1

CJ-1063 4/7/92 CALIBRATION CURVE 63C1 SUGO #2 ENGINE

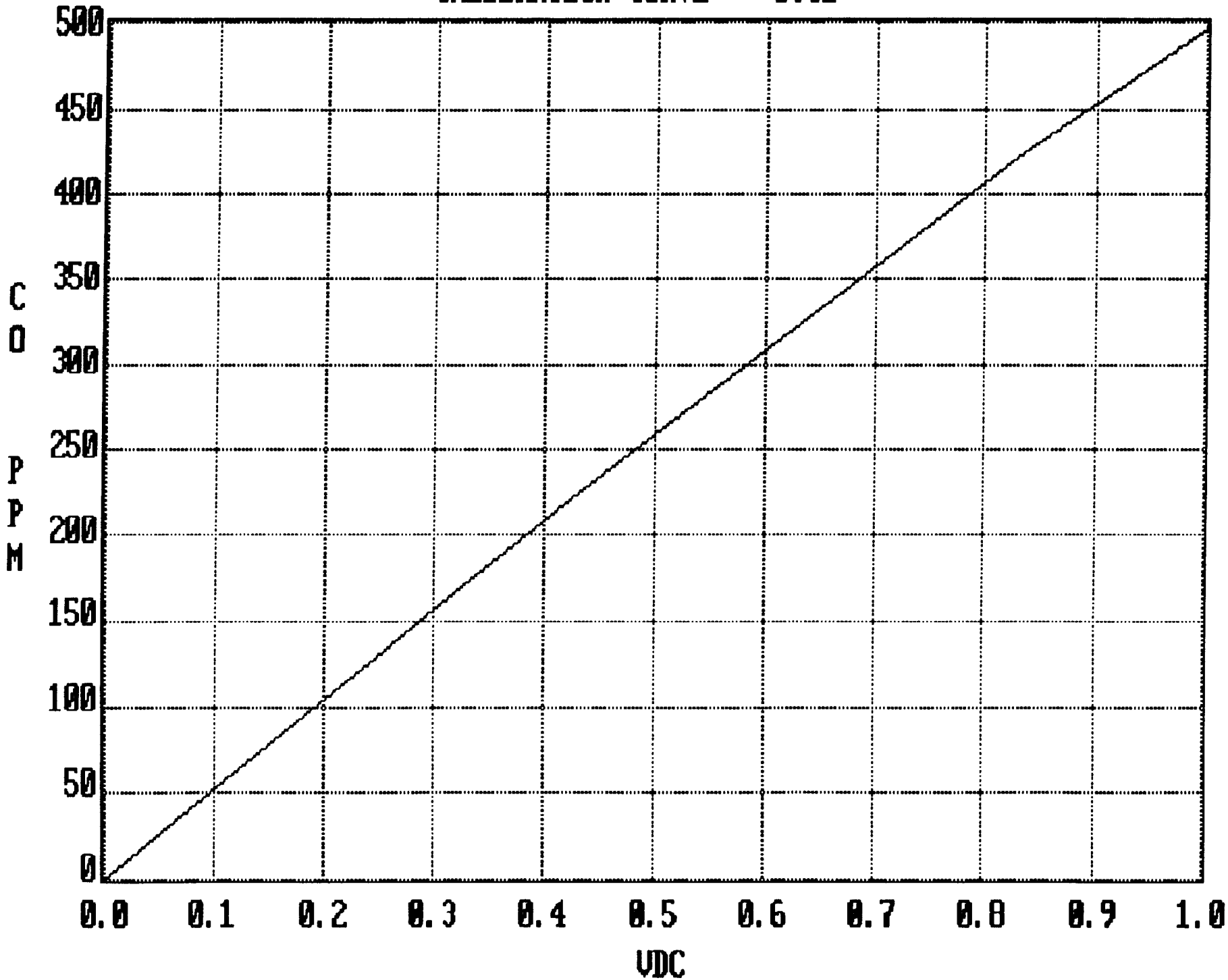

CJ-1063 4/7/92 CALIBRATION CURVE 63C2 SLIGO #2 ENGINE

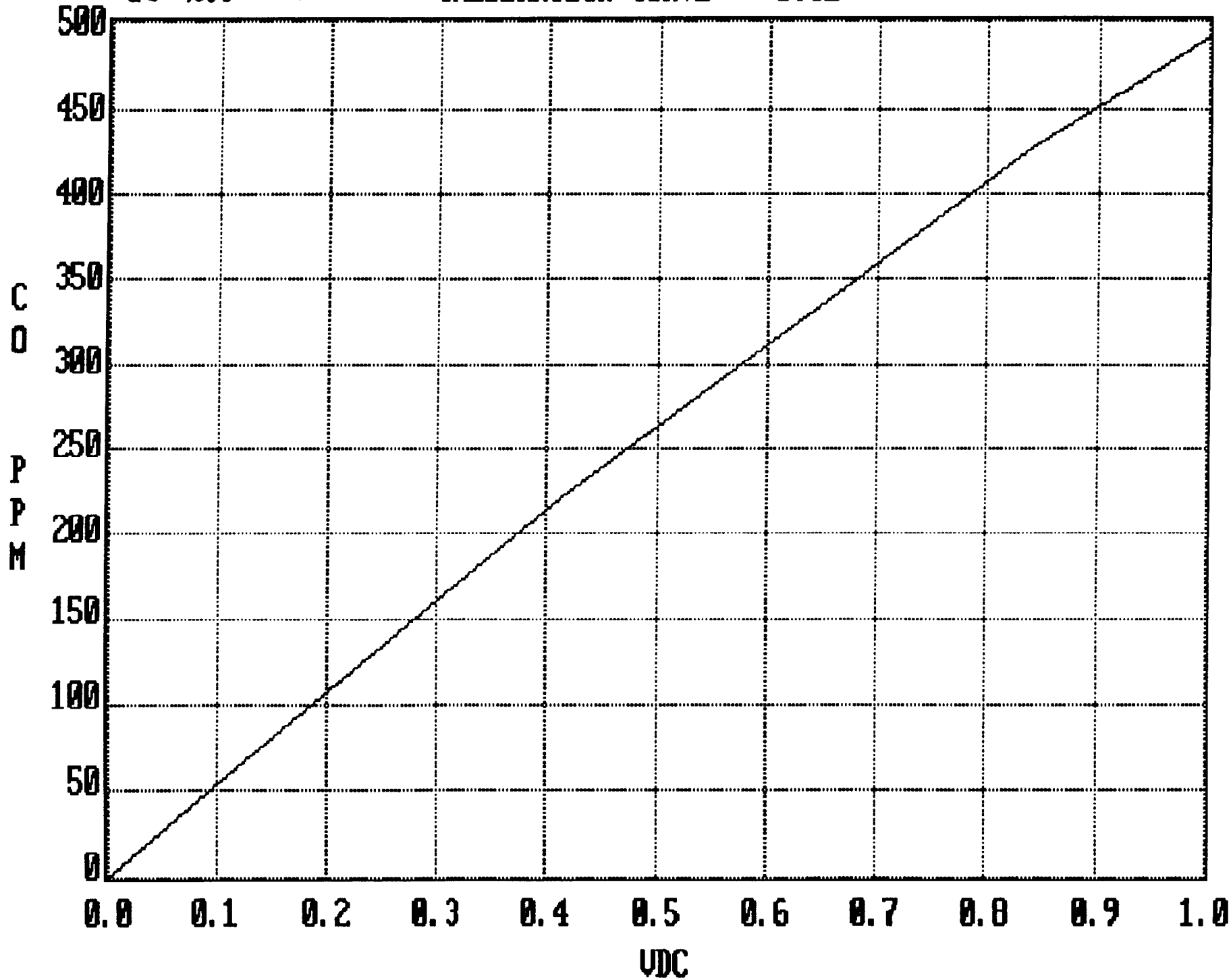

CJ-1063 4/7/92 CALIBRATION CURVE 63C3 SLIGO #2 ENGINE

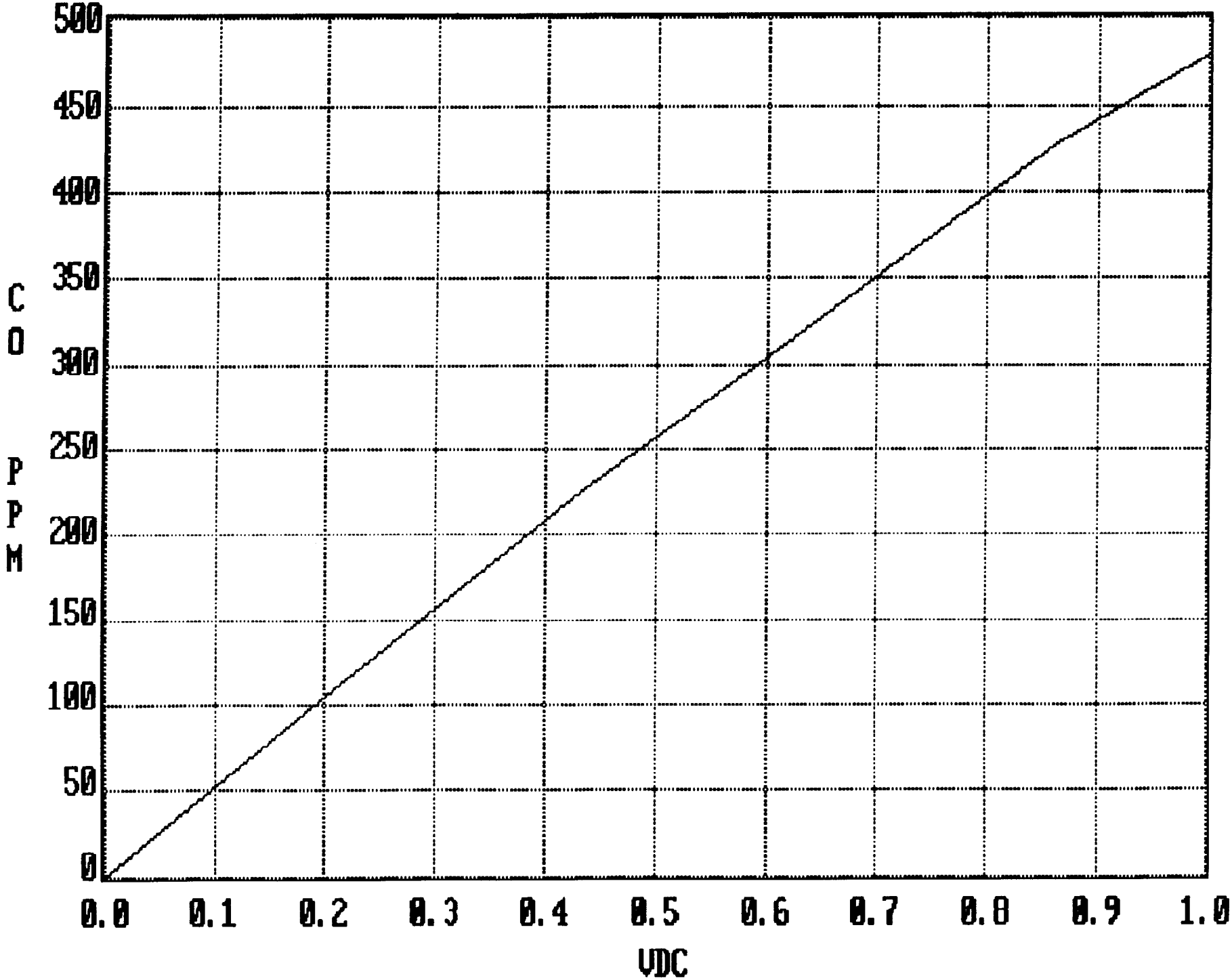

Scott Specialty Gases

a division of Scott Environmental Technology, Inc.

1290 COMBERMERE STREET, TROY, MICHIGAN 48084 (313) 589-2950

Shipped From : Scott Michigan

Our Project # : 527461

Your P.O. # : 2086NO

Expiration Date : 3-9-93

Cylinder Number : ALM-023015

Cylinder Pressure 1900 psig

Customer :
RADCO
BOB MEYERS-CETCON
106 SEA GULL CIRCLE
LA FAYETTE, LA. 70508

CERTIFICATE OF ANALYSIS - EPA PROTOCOL GASES

PERFORMED ACCORDING TO SECTION 3.0.4

Certified Per Traceability Protocol # 1

Procedure # G1

File # PO-1085

Certified Accuracy 1 % NBS Traceable

ANALYZED CYLINDER		REFERENCE STD			INSTRUMENTATION		
COMPONENT	CERTIFIED CONC.	SRM # (CRM #)	CYLINDER NUMBER	CONC.	INSTR/MODEL/SERIAL #	LAST CALIBRATION DATE	ANALYTICAL PRINCIPLE
NITRIC OXIDE	442.4 PPM	1687	ALM-016029	965.5 PPM	BECKMAN 951A 270-0828998	7-24-91	CHEMILUMINESCENCE
		1685	ALM-008716	250.3 PPM			

BALANCE GAS : NITROGEN

NITROGEN DIOXIDE 2.00 PPM (FROM SECOND ANALYSIS)

FIRST ANALYSIS DATE : 9-3-91

ZERO GAS (mV)	TEST GAS (mV)	RESULTS PPM	REFERENCE GAS CONC.	REFERENCE GAS (mV)	RESULTS PPM
0.00	44.20	442.4	965.5 PPM	96.50	965.5
0.00	44.20	442.4		96.50	965.5
0.00	44.20	442.4		96.50	965.5

CALCULATED RESULTS 442.4, 442.4, 442.4

AVERAGE : 442.4 PPM

SECOND ANALYSIS DATE : 9-9-91

ZERO GAS (mV)	TEST GAS (mV)	RESULTS PPM	REFERENCE GAS CONC.	REFERENCE GAS (mV)	RESULTS PPM
0.00	44.20	442.4	965.5 PPM	96.50	965.5
0.00	44.20	442.4		96.50	965.5
0.00	44.20	442.4		96.50	965.5
0.00	44.40 NOX	444.4			

CALCULATED RESULTS 442.4, 442.4, 442.4

444.4 PPM NOX

AVERAGE : 442.4 PPM

CALIBRATION CURVE 1 ST DEGREE

SRM # (CRM #)	CONC. PPM	SPLIT PT (%)	DVM (mV)	FITTED VALUE	PERCENT ERROR
1687	965.5	100	96.50	965.5	0.00
	250.3	26	25.00	250.3	0.00
		0		0.0000	0.00
		0		0.0000	0.00
		0		0.0000	0.00
		0		0.00	0.00
		0		0.0000	0.00
1685	250.3	LOW	25.00	250.3	0.00
1687	965.5	HIGH	96.50	965.5	0.00

Analyst : Approved By : L. Shapiro

* GMIS - GAS MANUFACTURER'S INTERNAL STANDARD

The sole liability of this Company for gas which fails to comply with the analysis shall be replacement thereof by the Company without extra cost.

Scott Specialty Gases

a division of Scott Environmental Technology, Inc.

1290 COMBERMERE STREET, TROY, MICHIGAN 48084 (313) 589-2950

Shipped From : Scott Michigan

Our Project # : 527461

Your P.O. # : 2086ND

Expiration Date : 3-9-93

Cylinder Number : ALM-022983

Cylinder Pressure 1900 psig

Customer :
RADCO
BOB MEYERS-CETCON
106 SEA GULL CIRCLE
LA FAYETTE, LA. 70508

**** CERTIFICATE OF ANALYSIS - EPA PROTOCOL GASES ****
PERFORMED ACCORDING TO SECTION 3.0.4

Certified Per Traceability Protocol # 1

Procedure # 61

File # PO-1086

Certified Accuracy 1 % NBS Traceable

ANALYZED CYLINDER		REFERENCE STD			INSTRUMENTATION		
COMPONENT	CERTIFIED CONC.	SRM # (CRM #)	CYLINDER NUMBER	CONC.	INSTR/MODEL/SERIAL #	LAST CALIBRATION DATE	ANALYTICAL PRINCIPLE
NITRIC OXIDE	896.0 PPM	1687	ALM-016029	965.5 PPM	BECKMAN 951A 270-082899B	7-24-91	CHEMILUMINESCENCE
		1685	ALM-008716	250.3 PPM			

BALANCE GAS : NITROGEN

NITROGEN DIOXIDE 4.00 PPM (FROM SECOND ANALYSIS)

FIRST ANALYSIS DATE : 9-3-91

ZERO GAS (mV)	TEST GAS (mV)	RESULTS PPM	REFERENCE GAS CONC.	REFERENCE GAS (mV)	RESULTS PPM
0.00	89.50	895.5	965.5 PPM	96.50	965.5
0.00	89.50	895.5		96.50	965.5
0.00	89.50	895.5		96.50	965.5

CALCULATED RESULTS 895.5, 895.5, 895.5

AVERAGE : 895.5 PPM

SECOND ANALYSIS DATE : 9-9-91

ZERO GAS (mV)	TEST GAS (mV)	RESULTS PPM	REFERENCE GAS CONC.	REFERENCE GAS (mV)	RESULTS PPM
0.00	89.60	896.5	965.5 PPM	96.50	965.5
0.00	89.60	896.5		96.50	965.5
0.00	89.60	896.5		96.50	965.5
0.00	90.00 NOX	900.5			

CALCULATED RESULTS 896.5, 896.5, 896.5

900.5 PPM NOX

AVERAGE : 896.5 PPM

CALIBRATION CURVE 1 ST DEGREE

SRM # (CRM #)	CONC. PPM	SPLIT PT (%)	DVM (mV)	FITTED VALUE	PERCENT ERROR
1687	965.5	100	96.50	965.5	0.00
	250.3	26	25.00	250.3	0.00
		0		0.0000	0.00
		0		0.0000	0.00
		0		0.0000	0.00
		0		0.00	0.00
		0		0.0000	0.00
1685	250.3	LOW	25.00	250.3	0.00
1687	965.5	HIGH	96.50	965.5	0.00

Analyst: Approved:

The reliability of this Company for use which fails to comply with this analysis shall be replacement therefor by the Company without extra cost

* GMIS - GAS MANUFACTURER'S INTERNAL STANDARD

Scott Specialty Gases

Scott Environmental Technology, Inc.

1290 COMBERMERE STREET, TROY, MICHIGAN 48084 (313) 589-2950

Our Project # : 517685

Your P.O. # : 1171NO

Expiration Date : 5-27-92

Cylinder Number ALM-011439

Cylinder Pressure 1900 psig

ustomer :
RADCO, INC.
6520 SOUTH LEWIS
TULSA, OK. 74136

**** CERTIFICATE OF ANALYSIS - EPA PROTOCOL GASES ****
PERFORMED ACCORDING TO SECTION 3.0.4

Certified Per Traceability Protocol # 1

Procedure # G1

File # P06948

Certified Accuracy 1 % NBS Traceable

COMPONENT	CERTIFIED CONC.	REFERENCE STD SRM # (CRM #)	REFERENCE STD CYLINDER NUMBER	REFERENCE STD CONC.	GAS ANALYZER MAKE/MODEL/SERIAL #	GAS ANALYZER LAST CALIBRATION DATE	ANALYTICAL PRINCIPLE
ARBON MONOXIDE	224.9 PPM	1681	CAL-7913	970.0 PPM	HORIBA/OPE-144E/560172153	7-25-90	NON-DISPERSIVE INFRARED
		GMIS*	XA-9163	1001 PPM			

ALANCE GAS : NITROGEN

CERTIFIED EPA PROTOCOL

FIRST ANALYSIS DATE : 11-15-90

ZERO GAS (mV)	TEST GAS (mV)	RESULTS PPM	REFERENCE GAS CONC.	REFERENCE GAS (mV)	RESULTS PPM
.00	23.70	225.5	243.3 PPM	25.60	243.9
).00	23.70	225.5		25.60	243.9
).00	23.70	225.5		25.60	243.9

CALCULATED RESULTS 224.9, 224.9, 224.9

AVERAGE : 224.9 PPM

SECOND ANALYSIS DATE : 11-27-90

ZERO GAS (mV)	TEST GAS (mV)	RESULTS PPM	REFERENCE STANDARD CONC.	REFERENCE GAS (mV)	RESULTS PPM
0.00	23.70	225.5	243.3 PPM	25.60	243.9
0.00	23.70	225.5		25.60	243.9
0.00	23.70	225.5		25.60	243.9

CALCULATED RESULTS 224.9, 224.9, 224.9

AVERAGE : 224.9 PPM

CALIBRATION CURVE 2 nd DEGREE

SRM # (CRM #)	CONC. PPM	SPLIT PT (%)	DVM (mV)	FITTED VALUE	PERCENT ERROR
	1001	100	100.00	1001	0.00
1681	970.0	97	97.20	971.2	0.13
	243.3	24	25.60	243.9	0.24
	100.4	10	10.70	100.8	0.42
	0.0000	0	0.00	0.0000	0.00
		0		0.00	0.00
		0		0.00	0.00
GMIS	100.4	LOW	10.70	100.8	0.42
1681	970.0	HIGH	97.20	971.2	0.13

* GMIS - GAS MANUFACTURER'S INTERNAL STANDARD

Analyst : Wates

Approved By : J. Shapiro

The only liability of this Company for gas which fails to comply with this analysis shall be replacement thereof by the Company without extra cost.

Scott Specialty Gases

a division of Scott Environmental Technology, Inc.

1290 COMBERMERE STREET, TROY, MICHIGAN 48084 (313) 589-2950

Our Project # : 517685

Your P.O. # : 1171NO

Expiration Date : 5-19-92

Cylinder Number AAL-8628

Cylinder Pressure 1900 psig

Customer :
RADCO, INC.
6520 SOUTH LEWIS
TULSA, OK. 74136

RECEIVED
JAN 2 1991
RADCO

RECEIVED
JAN 0 2 1991
SUITE 275

**** CERTIFICATE OF ANALYSIS - EPA PROTOCOL GASES ****
PERFORMED ACCORDING TO SECTION 3.0.4

Certified Per Traceability Protocol # 1

Procedure # G1

File # F06925

Certified Accuracy 1 % NBS Traceable

REFERENCE STD					GAS ANALYZER		
COMPONENT	CERTIFIED CONC.	SRM # (CRM #)	CYLINDER NUMBER	CONC.	MAKE/MODEL/SERIAL #	LAST CALIBRATION DATE	ANALYTICAL PRINCIPLE
CARBON MONOXIDE	426.9 PPM	1681	CAL-7913	970.0 PPM	HORIBA/OPE-1[illegible]AE/560[illegible]153	7-25-90	NON-DISPERSIVE INFRARED
		GMIS*	XA-9163	1001 PPM			

BALANCE GAS : NITROGEN

FIRST ANALYSIS DATE : 11-13-90

ZERO GAS (mV)	TEST GAS (mV)	RESULTS PPM	REFERENCE GAS CONC.	REFERENCE GAS (mV)	RESULTS PPM
0.00	44.30	427.5	970.0 PPM	97.20	971.2
0.00	44.30	427.5		97.20	971.2
0.00	44.30	427.5		97.20	971.2

CALCULATED RESULTS 426.9, 426.9, 426.9

AVERAGE : 426.9 PPM

SECOND ANALYSIS DATE : 11-19-90

ZERO GAS (mV)	TEST GAS (mV)	RESULTS PPM	REFERENCE STANDARD CONC.	REFERENCE GAS (mV)	RESULTS PPM
0.00	44.30	427.5	970.0 PPM	97.20	971.2
0.00	44.30	427.5		97.20	971.2
0.00	44.30	427.5		97.20	971.2

CALCULATED RESULTS 426.9, 426.9, 426.9

AVERAGE : 426.9 PPM

CALIBRATION CURVE 2 nd DEGREE

SRM # (CRM #)	CONC. PPM	SPLIT PT (%)	DVM (mV)	FITTED VALUE	PERCENT ERROR
	1001	100	100.00	1001	0.00
1681	970.0	97	97.20	971.2	0.13
	243.3	24	25.60	243.9	0.24
	100.4	10	10.70	100.8	0.42
	0.0000	0	0.00	0.0000	0.00
		0		0.00	0.00
		0		0.00	0.00
GMIS	100.4	LOW	10.70	100.8	0.42
1681	970.0	HIGH	97.20	971.2	0.13

* GMIS - GAS MANUFACTURER'S INTERNAL STANDARD

Analyst : [illegible]

Approved By : J. Shapiro

The only liability of this Company for gas which fails to comply with this analysis shall be replacement thereof by the Company without extra cost.

APPENDIX E

Lab Analysis

APR. 6-92 MON 10:28 SPL CARTHAGE TX

SOUTHERN PETROLEUM LABORATORIES INC.

Certificate of Analysis No. 0-29295

Company: ARCO OIL & GAS COMPANY
Meter Number: 029793
Location: SLIGO SALES CHECK
Field: SLIGO (LA)
Sample point: METER RUN
Sample of: FIELD SEPARATOR GAS
Conditions: 880 psig at 77 deg. F.
Sampled by: IRA LAGRONE, SPL
Sample date: 03/30/92
Remarks:

APRIL 1, 1992

Analysis:

	Mol %	GPM at 15.025 psia
Nitrogen	1.09	
Carbon dioxide	0.14	
Methane	90.38	
Ethane	4.92	1.342
Propane	1.60	0.450
Iso-butane	0.45	0.150
N-butane	0.52	0.167
Iso-pentane	0.18	0.067
N-pentane	0.18	0.066
Hexanes	0.22	0.092
Heptanes plus	0.32	0.158
	100.00	2.492

Specific Gravity at 60 deg.F. (air=1) 0.6370

Calculated B.T.U./cu. ft. @ 15.025 psia and 60 deg.F.
Dry basis 1143
Wet basis 1124

Z factor 0.9974

Southern Petroleum Laboratories, Inc.

CARLOS HUNT

CETCON, Combustion and Environmental Testing Consultants
division of RADCO INC.
FUEL GAS COMPOSITION PROGRAM-written by R.J.SWEDEEN

FUEL GAS COMPOSITION
ARCO SLIGO FACILITY

4/1/92 8:00A

COMPONENT	MW	MOLE %	BTU/SCF(LHV)
METHANE, CH4, C1	16.0	90.380	821.6
ETHANE, C2H6, C2	30.1	4.920	79.6
ETHYLENE, C2H4, C2-	28.0	0.000	0.0
PROPANE, C3H8, C3	44.1	1.600	37.1
PROPYLENE, C3H6, C3-	42.1	0.000	0.0
ISO-BUTANE, IC4H10, IC4	58.1	0.450	13.5
N-BUTANE, NC4H10, NC4	58.1	0.520	15.7
BUTYLENES, C4H8, C4-	58.1	0.000	0.0
ISO-PENTANE, IC5H12, IC5	72.2	0.180	6.7
N-PENTANE, NC5H12, NC5	72.2	0.180	6.7
PENTENES, 1-C5H10, 1-C5-	70.1	0.000	0.0
HEXANE, NC6H14, NC6	86.2	0.540	23.8
OXYGEN, O2,	32.0	0.000	0.0
NITROGEN, N2,	28.0	1.090	0.0
HYDROGEN, H2,	2.0	0.000	0.0
CARBON MONOXIDE, CO,	28.0	0.000	0.0
CARBON DIOXIDE, CO2,	44.0	0.140	0.0
WATER,H20,	18.0	0.000	0.0
BENZENE,C6H6,	78.1	0.000	0.0
TOLUENE,C7H8,	92.1	0.000	0.0
ETHYLBENZENE,C8C10,	106.2	0.000	0.0
XYLENE,C8C10,	106.2	0.000	0.0
TOTAL		100.000%	1004.5 (BTU/SCF, LHV)

FG TEMP(F):537
FG PRES(psia):894.7
FGmw(lb/lb-mole): 18.3
DENSITY(lb/scf):2.849

APPENDIX F

Equations

NOMENCLATURE

General Equations

A_s	Stack cross sectional area, sq. in.
CF	Cubic feet
C_F	Wet gas meter orifice correction factor
CFM	Cubic feet per minute
C_P	Pitot tube coefficient
C_{PM}	Particulate matter concentrations, lb/dscf
D	Stack diameter, in.
D_e	Equivalent stack diameters for rectangular ducts, in.
DGM	Dry gas meter
D_N	Nozzle diameter, in.
E	Emission ratio, lb/MMBtu
%EA	Percent of excess air
F_d	Fuel factor or F-factor, dscf/MMBtu
Hg	Mercury
%I	Percent isokinetic
L	Length, in.
M_D	Volume fraction of dry gas
MW_d	Dry molecular weight of stack gas, g/g- mole (lb/lb-mole).
MT	Total Particulate, mg
MW	Molecular weight of flue gas
MW_D	Molecular weight of dry flue gas
%M	Percent moisture
$\%O_2$	Percent oxygen in flue gas, dry basis
$\%O_{2d}$	Percent oxygen in flue gas, dry basis
P_B	Barometric pressure, in. Hg
P_{bar}	Barometric pressure at sampling site, mm Hg (in. Hg).
PM	Particulate matter emission, lb/hr
P_M	Pressure drop across orifice, in. water
P_S	Stack static pressure, in. water or in. Hg
ΔP	Stack gas velocity head, in. water
PPM	Parts per million
Q_A	Actual stack flow, acfm
Q_S	Dry stack flow, scfm
SCFM	Standard cubic feet per minute
T_M	Mean gas meter temperature, °F or °R
T_R	Test run time, min.
T_S	Average stack temperature, °F or °R
V_M	Volume of dry gas at meter conditions, scf
V_{Mstd}	Wet gas meter volume in std conditions, scf
V_S	Stack flow velocity, fpm
V_W	Total water collected, gm
V_{Wgas}	Volume of moisture in flue gas, scf
W	Width, in.

EQUATIONS

1. Stack cross sectional area, sq. in

$$A_S = \frac{\pi}{4} \cdot D^2$$

$$D_e = \frac{2LW}{(L+W)}$$, *equivalent stack diameters for rectangular ducts.*

2. Dry gas volume samples at standard conditions (29.92" Hg, 528°R)

$$V_{Mstd} = 17.65\ V_M[(P_B + (P_M/13.6))/T_M]$$

3. Water vapor volume collected at standard conditions, scf

$$V_{Wgas} = 0.0472 \cdot V_W$$

4. Percent moisture content

$$\%M = V_{Wgas}/(V_{Mstd} + V_{Wgas}) \cdot 100$$

5. Dry gas mole fraction

$$M_D = (100 - \%M)/100$$

6. Mean molecular weight of dry stack gas

$$MW_D = (\%CO_2 \cdot 0.44) + (\%O_2 \cdot 0.32) + (\%N_2 \cdot 0.28)$$

7. Molecular weight of stack gas

$$MW = M_D \cdot MW_D + 18(1 - M_D)$$

8. Stack velocity, fpm

$$V_S = 5123.8 \cdot C_P(T_S/(P_S \cdot MW))^{1/2} \cdot Avg(\Delta P_S^{1/2})$$

9. Volumetric flow at stack conditions, ACFM

$$Q_A = (V_S \cdot A_S)/144$$

10. Volumetric flow at standard conditions, SCFM

$$Q_S = 0.123 \cdot V_S \cdot M_D \cdot P_S \cdot A_S/T_S$$

11. Percentage of excess air

$$\%EA = 100 \cdot (\%O_2 - 0.5 \cdot \%CO)/(0.265 \cdot \%N_2 - \%O_2 + 0.5 \cdot \%CO)$$

12. Stack pressure, "Hg

$P_S = P_B + P_S\ (in\ water)/13.6$

13. Particulate matter concentrations, lb/dscf

$C_{PM}(lb/dscf) = 2.20\,(10^{-6}) \cdot MT\ (mg)/V_{Msd}(scf)$

14. Particulate matter emission, lb/hr

$PM(lb/hr) = C_{PM}(lb/dscf) \cdot SCFM \cdot 60\,(\mathrm{min}/hr)$

15. Emission ratio (F-factor method)

$E, lb/MMBtu = C_d, lb/scf \cdot F_d \cdot [20/(20.9 - \%O_{2d})]$

16. Emission ratio,

$$E, lb/MMBtu = \frac{lb/hr\ emission}{MMBtu/hr}$$

17. Nitrogen oxide emission, lb/hr

$NO_X(lb/hr) = 7.17\,(10^{-6}) \cdot SCFM \cdot NO_x(ppm)$

18. Nitrogen oxide emission for F-factor method

$NO_X,\ lb/hr = E \cdot Q_{in}$

19. Carbon monoxide emissions, lb/hr

$CO(lb/hr) = 4.36\,(10^{-6}) \cdot SCFM \cdot CO(ppm)$

20. Carbon monoxide emission for F-factor method

$CO,\ lb/hr = E \cdot Q_{in}$

21. Sulfur dioxide emissions, lb/hr

$SO_2(lb/hr) = 9.97\,(10^{-6}) \cdot SCFM \cdot SO_2(ppm)$

22. Sulfur dioxide emission for F-factor method

$SO_2,\ lb/hr = E \cdot Q_{in}$

23. Total Hydrocarbon emissions (non-methane), lb/hr

$THC(lb/hr) = 6.87\,(10^{-6}) \cdot SCFM \cdot THC(ppm)$ [*Reported as propane*]

$THC(lb/hr) = 1.87\,(10^{-6}) \cdot SCFM \cdot THC(ppm)$ [*Reported as carbon*]

24. Total Hydrocarbon (non-methane) emission for F-factor method

$$THC,\ lb/hr = E \cdot Q_{in}$$

25. Percent isokinetics

$$\%I = (1039 \cdot V_{Mstd} \cdot T_S)/(M_D \cdot P_S \cdot V_S \cdot T_R \cdot D_N^2)$$

APPENDIX G

Original Test Proposal

CETCON
Combustion & Environmental Testing Consultants
A Division of RADCO
6520 SOUTH LEWIS
TULSA, OK 74136
(918) 749-3391

FAXED 3/6/92 NK 2:15

MAIN FAX:	(918) 744-6916	**ALT. FAX:**	(918) 749-7354
TO:	ARCO	**DATE:**	March 6, 1992
		SENDER:	Jerry Mc Closkey
ATTN:	Charley Brannon	**CETCON REF:**	PC-3201
REF:		**TOTAL NO. OF PAGES:** (including this page)	2
FAX NO.:	(318) 949-0182		

IF THERE IS A PROBLEM IN TRANSMISSION, PLEASE CALL (918) 748-4518

Charley,

Please find attached the original sketch you sent me concerning engine exhaust dimensions and configuration. I have marked the necessary sample port locations necessary to conduct the engine emission testing. The ports should be installed on the engine that is most accessible.

If you have any questions or comments give me a call at (918) 748-4508.

Jerry McCloskey

JAN-02-'00 MON 06:28 ID: TEL NO: #001 P01

SLIGO ARCO OIL & GAS

EXHAUST

TO: JERRY MCCLOSKEY

FROM: CHARLEY BRANNON

INSTALL 2 FLUE GAS SAMPLE PORT 90° APART. ONE ON THE SIDE OF THE EXHAUST & ONE ON THE BOTTOM ABOUT 11' FROM THE EXPANSION JOINT. PORTS SHOULD BE A MINIMUM OF 1½" Ø. I SUGGEST USING 1½ THREDOLETS AND A SCREWED PLUG TO SEAL THE PORT HOLE.

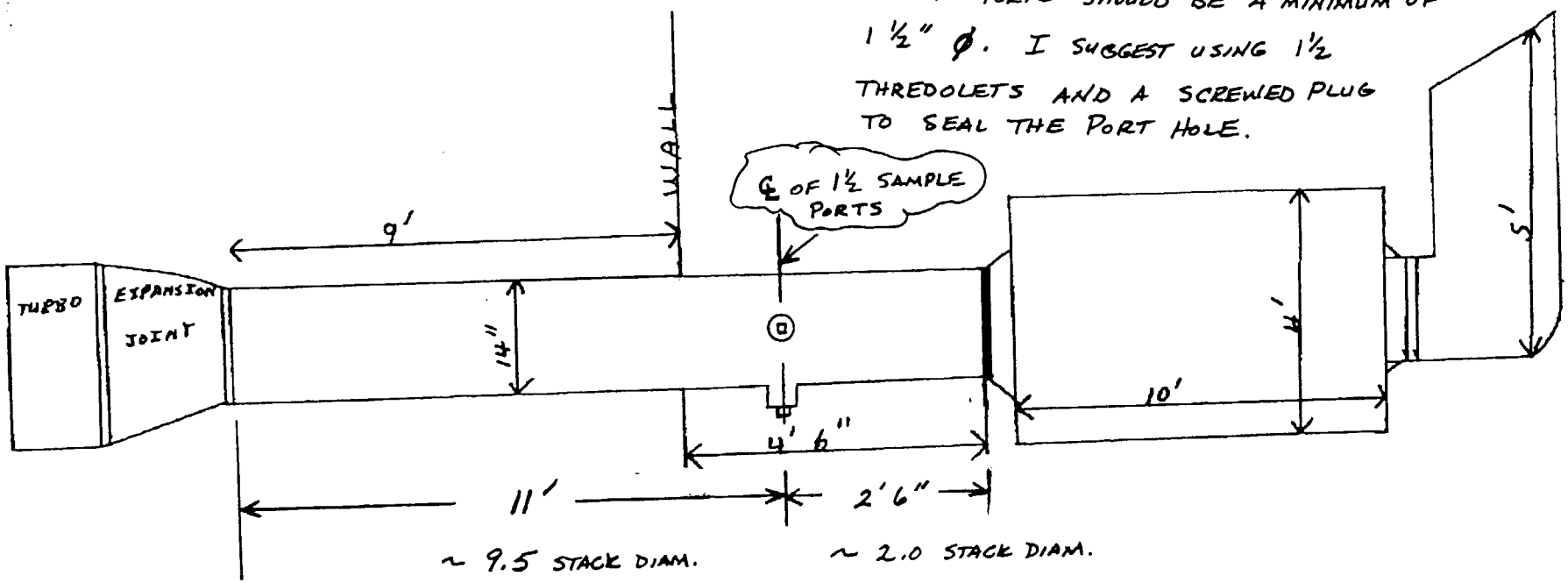

CHARLEY,

HOW FAR IS IT FROM HORZ. EXHAUST TO GRADE? WILL WE NEED SCAFFOLD, MANLIFT, EXTENSION LADDER, ~~ETC.~~ TO ALLOW SAFE ACCESS TO PORTS.

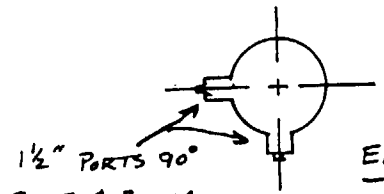

END VIEW

FLUE GAS SAMPLE FLOW SCHEMATIC

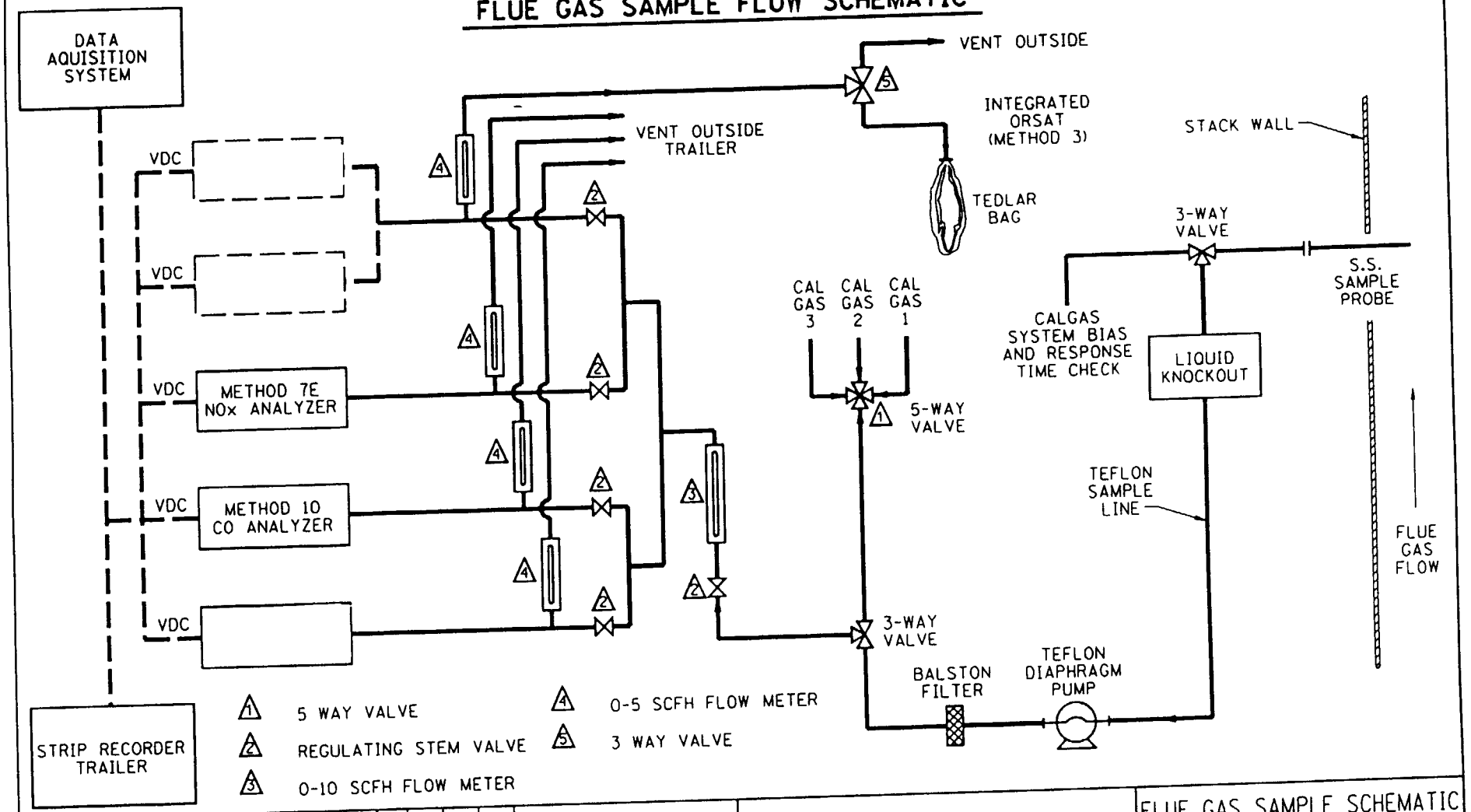

REV	DATE	BY	CKD	REVISION	REV	DATE	BY	CKD	REVISION
6					3				
5					2				
4					1				

CETCON
COMBUSTION AND ENVIRONMENTAL TESTING CONSULTANTS
TULSA OKLAHOMA

FLUE GAS SAMPLE SCHEMATIC

DRAWN: DLM	DATE: 10-10-91	JOB: CETCON	
CHECKED:	DATE:	DWG NO: 11	
CERTIFIED:	DATE:	REVISION: 0	

CAD Filename : CETCON11.DGN

APPENDIX H

Resumes