AMOCO PRODUCTION COMPANY

P.O. BOX 39500

LAFAYETTE, LOUISIANA 70593

OXIDES OF NITROGEN and CARBON MONOXIDE EMISSION TESTING

ENGINE 83-01 and 84-01

WILCOX PRODUCTION FACILITY CF # 3
LOCKHART CROSSING FIELD

SEPTEMBER 7-8, and OCTOBER 30, 1989

RECEIVED

JAN 04 1990

LA. DEPARTMENT OF
ENVIRONMENTAL QUALITY
AIR QUALITY DIVISION

Submitted By :

EMISSION TESTING SERVICES, INC.
P.O. BOX 15075
BATON ROUGE, LA 70895

89070

EMISSION TESTING SERVICES, INC.

POST OFFICE BOX 15075

BATON ROUGE, LOUISIANA 70895

CONFIRMATION OF INFORMATION

EMISSION TEST REPORT

FOR

AMOCO PRODUCTION COMPANY

P.O. BOX 39500

LAFAYETTE, LOUISIANA 70593

OXIDES OF NITROGEN and CARBON MONOXIDE
EMISSION TESTING

ENGINE 83-01 and 84-01

WILCOX PRODUCTION FACILITY CF # 3
LOCKHART CROSSING FIELD

SEPTEMBER 7-8, and OCTOBER 30, 1989

I certify that I have personally examined and am familiar with the information submitted herein, and based on my inquiries of those individuals immediately responsible for obtaining the information, I believe the submitted information is true, accurate, and complete.

Robert L. Romero
Amoco Production Company
Field Foreman

Fred Dowling
Emission Testing Services
Senior Consultant

Barry Gipson
Emission Testing Services
Manager

AMOCO PRODUCTION COMPANY

OXIDES OF NITROGEN and CARBON MONOXIDE
EMISSION TESTING

ENGINE 83-01 and 84-01

WILCOX PRODUCTION FACILITY CF # 3
LOCKHART CROSSING FIELD

SEPTEMBER 7-8, and OCTOBER 30, 1989

TABLE OF CONTENTS

I. Introduction 1

II. Summary 3

III. Procedure 5

IV. Analytical Technique 7

V. Chain of Custody 8

VI. Test Data & Calculations 9
- ENGINE 83-01
  - Method 1 ..... 9a
  - Methods 2-4, Runs 1, 2, 3 ..... 9b
  - Method 7E, Runs 1, 2, 3 19
  - Method 10, Runs 1, 2, 3 20
  - Field data, methods 3A, 7E, 10 21
- ENGINE 84-01
  - Method 1 211
  - Methods 2-4, Runs 1, 2, 3 ..... 21m
  - Method 7E, Runs 1, 2, 3 31
  - Method 10, Runs 1, 2, 3 32
  - Field data, methods 3A, 7E, 10 33
  - Engine operating data 34

VII. Appendix 35

I. INTRODUCTION

Emission Testing Services, Inc. was contracted by Amoco Production Company to conduct emission testing on engines 83-01 and 84-01 located at Amoco's Wilcox Production Facility CF # 3, Lockhart Crossing Field near Denham Springs, Louisiana. Oxides of nitrogen and carbon monoxide emissions were determined in order to demonstrate compliance within Louisiana Department of Environmental Quality permit number 1740-00024-00.

Engines 83-01 and 84-01 drive gas lift compressors. Engine 83-01 was manufactured by Waukesha, model number L7042, and is rated at 1000 hp. Engine 84-01 was manufactured by Waukesha, model number P9390 Gsiu, serial number 204098, and is rated at 1500 hp. The engines are natural gas fueled and are equipped with an exhaust converter designed to reduce oxides of nitrogen emissions. The compressors pickup flash gas from the separators at approximately 60 psig and compress the gas to approximately 1000 psig. The gas is injected into the wellbore to lift crude oil from the wells. Excess gas, not needed for injection, is sent to the pipeline. Crude oil is shipped off-site by pipeline and truck. All salt water produced is reinjected by electrically driven pumps into the reservoir to enhance recovery. A schematic diagram of the process follows on the next page.

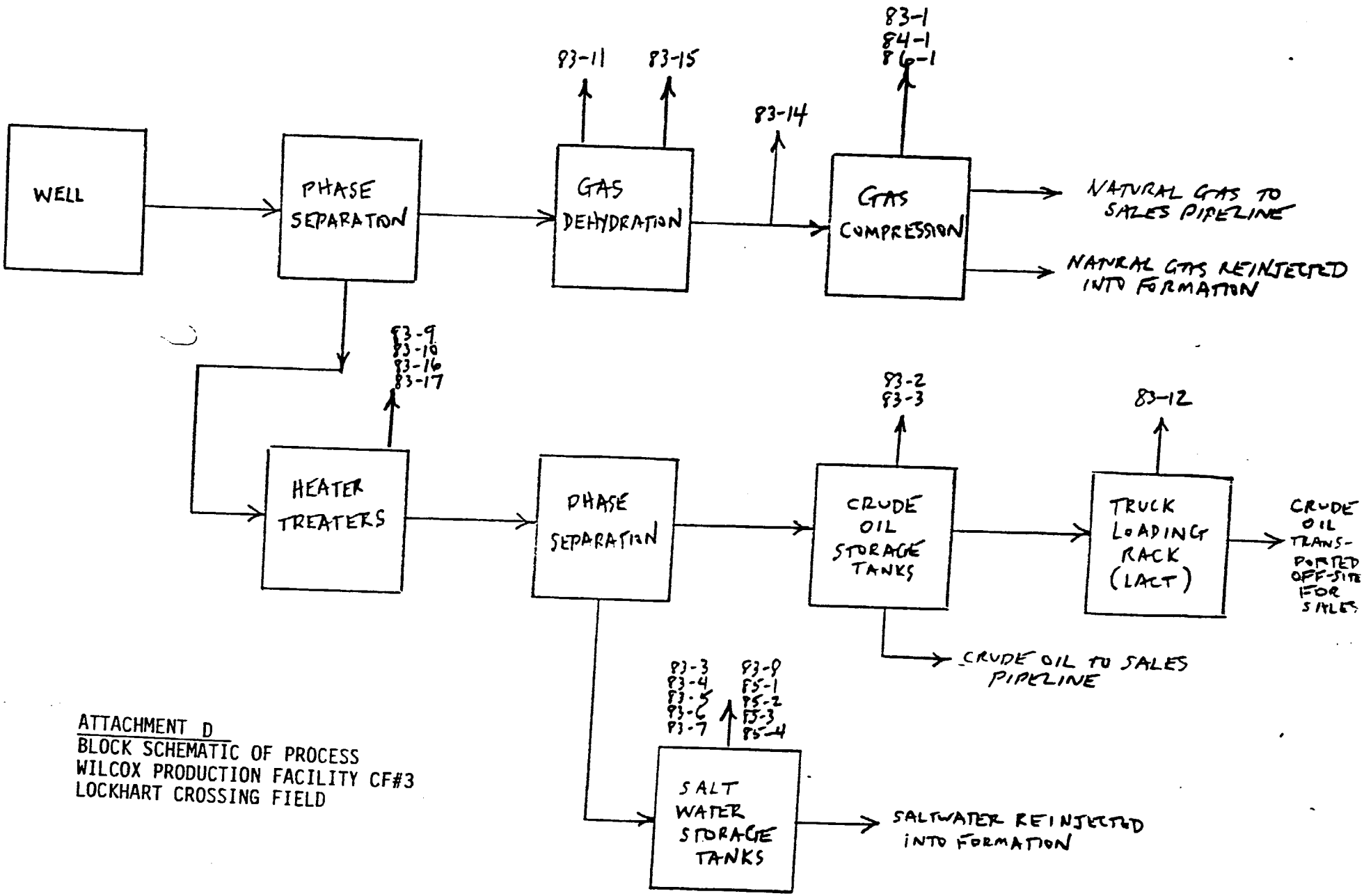

ATTACHMENT D
BLOCK SCHEMATIC OF PROCESS
WILCOX PRODUCTION FACILITY CF#3
LOCKHART CROSSING FIELD

Emissions were determined by EPA Method 7E, as modified by proposed subpart FF, for oxides of nitrogen emissions, and EPA Method 10 for carbon monoxide emissions. EPA Methods 1-4 were used to determine the number of traverse points and stack gas moisture, velocity and dry molecular weight.

The testing team consisted of John Angelloz, Brett Dedual, Fred Dowling, Barry Gipson, and Kevin Thibodeaux. Amoco Production Company representative, Randy Herbert during the September test and Mike Cormier during the October test, coordinated testing with facility operations.

Engine 83-01 was tested on September 7-8, 1989 during three 1 hr test runs while operating at 80 % of maximum load. During testing, engine operating data were recorded by Amoco personnel.

Three test runs were conducted on engine 84-01 on October 30, 1989. Engine load was at 80 % of maximum for all tests and all operating data were recorded by Amoco personnel.

II. SUMMARY

Emissions data collected from Engine 83-01 during testing on September 7-8, 1989 are tabulated below. Oxides of nitrogen data are reported as nitrogen dioxide without corrections as outline in Subpart FF.

AMOCO PRODUCTION COMPANY

ENGINE 83-01

PARAMETER	PERMIT LIMITS	RUN 1	RUN 2	RUN 3	AV'G.
DATE		9- 7-89	9- 7-89	9- 8-89	
TIME		1448-1548	1718-1818	845- 945	
OXIDES OF NITROGEN (lb/ Hr)	31.746	14.280	10.180	7.318	10.6
CARBON MONOXIDE (lb/ Hr)	2.469	1.338	1.380	1.209	1.309
OXYGEN (%)		4.18	4.82	4.53	4.51
HORSE POWER (hp)		800	800	800	
ENGINE SPEED (rpm)		880	880	803	854
STACK GAS					
Temperature, deg F		822	823	805	
Moisture, %		20.52	16.03	11.39	
Velocity, ft/ sec		86.13	89.65	71.79	
Flow rate, ACF/min		4058.8	4224.8	3383.2	
, DSCF/min		1331.3	1460.4	1254.1	

Emission data collected from Engine 84-01 during testing on October 30, 1989 are tabulated below. Oxides of nitrogen data are reported as nitrogen dioxide without corrections as outline in Subpart FF.

AMOCO PRODUCTION COMPANY

ENGINE 84-01

PARAMETER	PERMIT LIMITS	RUN 1	RUN 2	RUN 3	AV'G.
DATE		10-30-89	10-30-89	10-30-89	
TIME		1516-1615	1842-1945	2014-2113	
OXIDES OF NITROGEN (lb/ Hr)	9.524	8.578	8.470	9.206	8.75
CARBON MONOXIDE (lb/ Hr)	5.291	3.070	3.293	3.349	3.24
OXYGEN (%)		0.35	0.52	0.13	0.33
HORSE POWER (hp)		1200	1200	1200	1200
ENGINE SPEED (rpm)		906	904	902	904
STACK GAS					
Temperature, deg F		984	977	994	
Moisture, %		17.64	17.16	17.54	
Velocity, ft/ sec		103.38	100.84	102.31	
Flow rate, ACF/min		6165.4	6031.2	6101.8	
, DSCF/min		1858.2	1831.2	1827.1	

III. PROCEDURE

Emissions were determined using EPA Methods found in Appendix A, Part 60, Title 40 of the Code of Federal Regulations. A brief description of each method used follows.

METHOD 1: SAMPLE AND VELOCITY TRAVERSES FOR STATIONARY SOURCES

ENGINE 83-01
Engine 83-01 has a stack diameter of 12 in. Samples and measurements are collected at a point 1.50 stack diameters downstream and 1.67 stack diameters upstream, a point not meeting the eight- and two-diameter criteria of the method. Under these conditions the method requires 16 traverse points. During sampling the stack cross-section at the sampling point was divided into 16 equal areas with the sampling point located in the middle of each area.

ENGINE 84-01
Engine 84-01 has a stack diameter of 13.5 in. Samples and measurements are collected at a point 1.19 stack diameters downstream and 1.59 stack diameters upstream, a point not meeting the eight- and two-diameter criteria of the method. Under these conditions the method requires 16 traverse points. During sampling the stack cross-section at the sampling point was divided into 16 equal areas with the sampling point located in the middle of each area.

METHOD 2: DETERMINATION OF STACK GAS VELOCITY AND VOLUMETRIC FLOW RATE (TYPE S PITOT TUBE)

The average gas velocity in the stack was determined from the gas molecular weight, moisture content and the measurement of the average velocity head with a type "S" pitot tube. Dry volumetric flow rate was determined from the velocity and stack diameter.

METHOD 3: GAS ANALYSIS FOR CARBON DIOXIDE, OXYGEN, EXCESS AIR, AND DRY MOLECULAR WEIGHT

The dry molecular weight of the stack gas was determined using an Orsat analyzer. The Orsat measures the concentration of oxygen, carbon monoxide and carbon dioxide. The remaining gas components are assumed to be nitrogen.

METHOD 4: DETERMINATION OF MOISTURE CONTENT IN STACK GASES

A gas sample was extracted from the stack using a heated glass probe fitted with a particulate filter. The sample gas then passed through a series of four impingers immersed in an ice bath. The first two impingers contained measured volumes of water, the third was empty, and the fourth contained a known weight of silica gel. Any water vapor in the gas stream was condensed and trapped in the impingers. Moisture was determined gravimetrically.

METHOD 7E: DETERMINATION OF NITROGEN OXIDES EMISSIONS FROM STATIONARY SOURCES

A continuous gas sample was extracted from the stack at a centroidal sampling point. The sample was transferred through a heated sample line to a chemiluminescence analyzer for analysis of nitrogen oxides concentration.

METHOD 10: DETERMINATION OF CARBON MONOXIDE EMISSIONS FROM STATIONARY SOURCES

A continuous gas sample was extracted from the stack at a centroidal sampling point. The sample was transferred through a heated sample line to a carbon dioxide scrubber and then to a Luft-type nondispersive infrared analyzer (NDIR) for analysis of carbon monoxide.

IV. ANALYTICAL TECHNIQUE

All sample analysis were conducted following EPA methodology. A brief description follows for each method employed.

METHOD 7E: DETERMINATION OF NITROGEN OXIDES EMISSIONS FROM STATIONARY SOURCES

All samples collected were analyzed in the field using a continuous chemiluminescence analyzer. The analyzer was calibrated using gas standards prepared by EPA protocol number 1, traceable to NBS standards.

METHOD 10: DETERMINATION OF CARBON MONOXIDE EMISSIONS FROM STATIONARY SOURCES

All samples collected were analyzed in the field using a continuous nondispersive infrared analyzer. The analyzer was calibrated using gas standards prepared by EPA protocol number 1, traceable to NBS standards.

V. CHAIN of CUSTODY

Chain of custody procedures are initiated for all samples transported to the laboratory for analysis. The emission testing conducted produced no samples requiring transport to the laboratory for analyses as all analyses were completed in the field.

VI. TEST DATA & CALCULATIONS

All emission test field data, unit operations data, and laboratory analytical data are contained in this section along with the associated data reduction calculations.

Data from the field data sheets were manually input into a computer for data processing and calculations. Integrity of data input is maintained by using a double entry system. The computer performed all calculations and produced the calculations and results summary pages. Input data accuracy were further verified by comparison of raw field data to the computer data printed on the summary pages. Computer program integrity and calculations verification are validated by processing a known set of data. Further controls on the computer program are conducted by comparison of manual spot calculations of the raw data input to computer calculations results.

Traverse Point Layout

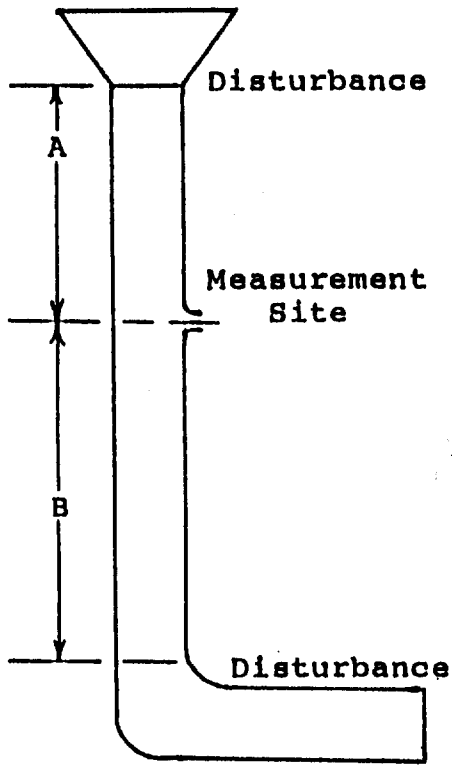

Client AMOCO

Date 090789

Unit Tested 83-01

Location DENHAM SPRINGS, LA

Upstream Distance (A) 20"

Downstream Distance (B) 18"

Inside Diameter 12"

Coupling Length 7.5"

Coupling Type 3" SCREW-ON

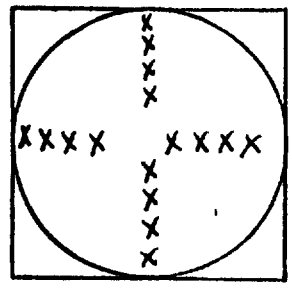

Cross Section Schematic of Stack

Traverse Point	Distance % of Diameter		Stack Diameter		Coupling Length		Traverse Points
1	0.032	x	12	+	7.5	=	~~7.884~~ 8.000
2	0.105						8.760
3	0.194						9.828
4	0.323						11.376
5	0.677						15.624
6	0.806						17.172
7	0.895						18.240
8	0.968		12		7.5		~~19.116~~ 19.000
9							
10							
11							
12							

CROSS SECTIONAL SCHEMATIC OF STACK TRAVERSE POINT LAYOUT

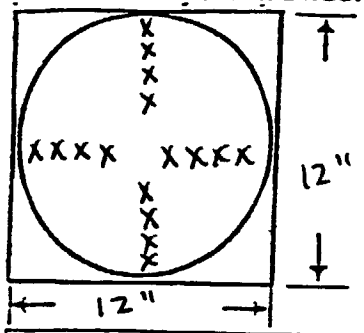

ETS FIELD DATA, METHOD(S) 1-4

PLANT: AMOCO
DATE: 090789
LOCATION: DENHAM SPRINGS
OPERATOR: J. ANGELLOZ
STACK NO.: 83-01
RUN NO.: 1

SAMPLE BOX NO.: BT
METER BOX NO.: 481
AMBIENT TEMPERATURE: 90°F
BAROMETRIC PRESSURE: 30.00
FILTER TARE wt mg: N/A
PROBE LENGTH, in.: 36

STACK DIAMETER, in.: 12.0
PITOT TUBE NO.: P-3-1
PITOT FACTOR: 0.822
METER Δ H@: 1.890
D.G.M.C. FACTOR: 0.998
K FACTOR: N/A

TRAVERSE POINT NUMBER	SAMPLING TIME (θ), min.	STATIC PRESSURE (in.H₂O)	STACK TEMP (Ts), °F	VELOCITY HEAD (ΔPs)	(√ΔPs)	PRESSURE DIFFERENTIAL ACROSS ORIFICE METER (ΔH) in. H₂O ACTUAL	DESIRED	GAS SAMPLE VOLUME (Vm), ft³	GAS SAMPLE TEMPERATURE AT DRY GAS METER INLET (Tmin), °F	OUTLET (Tmout), °F	SAMPLE BOX TEMPERATURE °F	TEMPERATURE OF GAS LEAVING CONDENSER OR LAST IMPINGER F	PUMP VACUUM in. Hg gauge
1	1614	-.435	672	.910	.954	2.0	2.0	564.532	104	100	240	63	4.2
2			746	.920	.959								
3			835	.800	.894								
4			841	.700	.837								
5			819	.860	.927								
6			839	1.050	1.025								
7			851	1.300	1.140								
8			854	1.300	1.140								
9			729	.850	.922								
10			840	.800	.894								
11			850	.730	.854								
12			848	.680	.825								
13			849	.830	.911								
14			855	1.050	1.025								
15			859	1.250	1.118								
16	1640.5	-.435	858	1.300	1.140	2.0	2.0	585.763	112	99	257	55	4.2
AVERAGE	26.5	-.435	821.56		.9728	2.0		21.232	103.75				

VOLUME OF LIQUID WATER COLLECTED	IMPINGER WEIGHTS			
FINAL	657.2	551.6	464.9	595.4
INITIAL	590.9	541.2	436.2	591.5
WEIGHT COLLECTED	66.3	10.4	28.7	3.9
TOTAL WEIGHT				109.3

ORSAT MEASUREMENT

	CO_2	O_2	CO	N_2
1	6.5	5.3	0.0	88.2
2				
3				
4				

COMMENTS:

PRE-LEAK CHECK GOOD @ 10" HG - .009 ft³/1.0 MIN
POST-LEAK CHECK GOOD @ 5" HG - .004 ft³/1.0 MIN

Emission Testing Services, Inc.
P.O. Box 15075
Baton Rouge, LA 70895
504-925-8405

Client : AMOCO
Source : 83-01
Testing Date : 9- 7-89
Run : 1

DETERMINATION OF STACK GAS MOISTURE CONTENT

Bws - Moisture fraction content
dH - Pressure differential across meter orifice, in H2O
Mw - Molecular weight of water, 18.0 lb/ lb mole
Pb - Barometric pressure at meter, in-Hg
Pst - Standard absolute pressure, 29.92 in-Hg
R - Ideal gas constant, 21.85 in-Hg ft3/ lb-mole deg R
Tm - Absolute temperature at meter, deg R
Tst - Standard absolute temperature, 528 deg R
Vm - Dry gas volume measured by meter, DCF
Vmstd- Dry gas volume at standard conditions, DSCF
Vw - Volume of water vapor collected, SCF
Wwc - Weight of water vapor collected, lb
I1w, I2w, I3w, weight of water condensed by impingers, g
SGw, weight of water collected by silica gel, g
Y - Dry gas meter calibration factor

$$Wwc = (I1w + I2w + I3w + SGw) / (453.6\ g/lb)$$

$$= (66.3 + 10.4 + 28.7 + 3.9) / (453.6) = .24096$$

$$Vw = \frac{Wwc\ R\ Tst}{Pst\ Mw} = \frac{(.24096)(21.85)(528)}{(29.92)(18.0)} = 5.16176$$

$$Vmstd = Vm\ Y \frac{(Pb + dH/13.6)}{Pst} \frac{Tst}{Tm}$$

$$= (21.232)(.9980) \frac{(30.000 + 2.0000/13.6)}{(29.92)} \frac{(528)}{(564.)}$$

$$= 19.99641$$

$$Bws = \frac{Vw}{Vw + Vmstd} = \frac{(5.16176)}{(5.16176 + 19.99641)} = .2052$$

Emission Testing Services, Inc.
P.O. Box 15075
Baton Rouge, LA 70895
504-925-8405

Client : AMOCO
Source : 83-01
Testing Date : 9- 7-89
Run : 1

DETERMINATION OF DRY MOLECULAR WEIGHT

Md - Dry molecular weight, lb/ lb-mole
%CO2 - Percent CO2 by volume (dry basis)
%O2 - Percent O2 by volume (dry basis)
%CO - Percent CO by volume (dry basis)
%N2 - Percent N2 by volume (dry basis)
0.280 - Molecular weight of N2 or CO, divided by 100
0.320 - Molecular weight of O2, divided by 100
0.440 - Molecular weight of CO2, divided by 100

Md = 0.440(%CO2) + 0.320(%O2) + 0.280(%N2 + %CO)

Md = 0.440(6.5) + 0.320(5.3) + 0.280(88.2 + .0)

= 29.252

Emission Testing Services, Inc.
P.O. Box 15075
Baton Rouge, LA 70895
504-925-8405

Client : AMOCO
Source : 83-01
Testing Date : 9- 7-89
Run : 1

DETERMINATION OF STACK GAS VELOCITY AND VOLUMETRIC FLOW RATE

A - Cross-sectional area of stack, ft2
Bws - Moisture fraction of stack gas
Cp - Pitot tube coefficient
dP - Avg., square root of velocity head, (in-H2O)**0.5
Kp - Pitot tube constant,
ft/sec (lb in-Hg/ lb-mole deg R in H2O)**0.5
Md - Molecular weight of stack gas, dry basis, lb/ lb-mole
Ms - Molecular weight of stack gas, wet basis, lb/ lb-mole
Pbar - Barometric pressure at measurement site, in-Hg
Pg - Static pressure of the stack gas, in H2O
Ps - Absolute stack gas pressure, in-Hg
Pstd - Standard absolute pressure, 29.92 in-Hg
Acf - Actual stack gas flow rate, ACF/min
Qsd - Dry volumetric stack gas flow rate
standard conditions, DSCF/Hr
Ts - Average stack gas temperature, deg R
Tstd - Standard absolute temperature, 528 deg R
Vs - Average stack gas velocity, ft/sec
3600 - Conversion factor, sec to Hr
18.0 - Molecular weight of water, lb/lb-mole

$$Ms = Md\ (1 - Bws) + 18.0\ (Bws) =$$

$$= (29.252)(1 - .2052) + (18.0)(.2052) = 26.943$$

$$Vs = Kp\ Cp\ dP \left(\frac{Ts}{Ps\ Ms}\right)^{0.5} =$$

$$= (85.49)(.8220)(.9729)\left(\frac{1282.}{[29.968][26.943]}\right)^{0.5} = 86.1306$$

$$Acf = (60)(Vs)(A) = (60)(86.1306)(.7854) = 4058.8$$

$$Qsd = 3600\ (1 - Bws)\ Vs\ A \frac{Tstd}{Ts} \frac{Ps}{Pstd} =$$

$$Qsd = 3600(1 - .2052)(86.1306)(.7854)\frac{(528)(29.968)}{(1282.)(29.92)}$$

= 79875.4 DSCFH
= 1331.3 DSCFM

CROSS SECTIONAL SCHEMATIC OF STACK TRAVERSE POINT LAYOUT

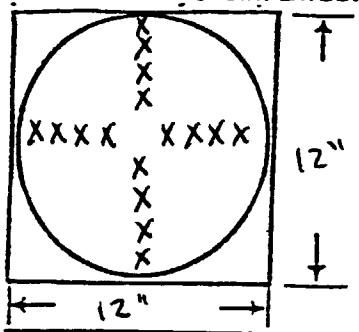

ETS FIELD DATA, METHOD(S) 1-4

PLANT: AMOCO
DATE: 090789
LOCATION: DENHAM SPRINGS
OPERATOR: J. ANGELLOZ
STACK NO.: 83-01
RUN NO.: 2

SAMPLE BOX NO.: MM
METER BOX NO.: 481
AMBIENT TEMPERATURE: 80°F
BAROMETRIC PRESSURE: 29.96
FILTER TARE wt mg: N/A
PROBE LENGTH, in.: 36

STACK DIAMETER, in.: 12
PITOT TUBE NO.: P-3-1
PITOT FACTOR: 0.822
METER Δ Hₒ: 1.890
D.G.M.C. FACTOR: 0.998
K FACTOR: N/A

TRAVERSE POINT NUMBER	SAMPLING TIME (θ), min.	STATIC PRESSURE (in.H₂O)	STACK TEMP (Ts), °F	VELOCITY HEAD (ΔPs)	(√ΔPs)	PRESSURE DIFFERENTIAL ACROSS ORIFICE METER (ΔH) in. H₂O ACTUAL	DESIRED	GAS SAMPLE VOLUME (Vm), ft³	GAS SAMPLE TEMPERATURE AT DRY GAS METER INLET (Tmin), °F	OUTLET (Tmout), °F	SAMPLE BOX TEMPERATURE °F	TEMPERATURE OF GAS LEAVING CONDENSER OR LAST IMPINGER F	PUMP VACUUM in. Hg gauge
1	1720	-.440	682	1.000	1.000	1.5	1.5	586.013	95	95	245	66	2.2
2			781	1.050	1.025								
3	1750		831	.880	.938	1.5	1.5	606.044	98	96	238	61	2.2
4			850	.770	.877								
5			847	.980	.990								
6			836	1.200	1.095								
7			855	1.200	1.095								
8			849	1.300	1.140								
9			733	1.150	1.072								
10			821	1.000	1.000								
11			839	.930	.964								
12			845	.860	.927								
13			847	.845	.919								
14			851	1.050	1.025								
15			851	1.200	1.095								
16		-.440	850	1.350	1.162	1.5	1.5						
AVERAGE	30 min	-.440	823.0		1.020	1.5		20.031	96.33				

VOLUME OF LIQUID WATER COLLECTED	IMPINGER WEIGHTS			
FINAL	592.6	506.7	468.8	522.6
INITIAL	534.3	494.1	467.0	568.2
WEIGHT COLLECTED	58.3	12.6	1.8	4.4
TOTAL WEIGHT				77.1

ORSAT MEASUREMENT

	CO_2	O_2	CO	N_2
1	6.4	5.0	0.0	88.6
2				
3				
4				

COMMENTS:

PRE-LEAK CHECK GOOD @ 10" HG - .008 ft³/1.0 MIN
POST-LEAK CHECK GOOD @ 6" HG - .003 ft³/1.0 min

Emission Testing Services, Inc.
P.O. Box 15075
Baton Rouge, LA 70895
504-925-8405

Client : AMOCO
Source : 83-01
Testing Date : 9- 7-89
Run : 2

DETERMINATION OF STACK GAS MOISTURE CONTENT

Bws - Moisture fraction content
dH - Pressure differential across meter orifice, in H2O
Mw - Molecular weight of water, 18.0 lb/ lb mole
Pb - Barometric pressure at meter, in-Hg
Pst - Standard absolute pressure, 29.92 in-Hg
R - Ideal gas constant, 21.85 in-Hg ft3/ lb-mole deg R
Tm - Absolute temperature at meter, deg R
Tst - Standard absolute temperature, 528 deg R
Vm - Dry gas volume measured by meter, DCF
Vmstd- Dry gas volume at standard conditions, DSCF
Vw - Volume of water vapor collected, SCF
Wwc - Weight of water vapor collected, lb
I1w, I2w, I3w, weight of water condensed by impingers, g
SGw, weight of water collected by silica gel, g
Y - Dry gas meter calibration factor

$$Wwc = (I1w + I2w + I3w + SGw) / (453.6\ g/lb)$$

$$= (58.3 + 12.6 + 1.8 + 4.4) / (453.6) = .16997$$

$$Vw = \frac{Wwc\ R\ Tst}{Pst\ Mw} = \frac{(.16997)(21.85)(528)}{(29.92)(18.0)} = 3.64110$$

$$Vmstd = Vm\ Y \frac{(Pb + dH/13.6)}{Pst} \frac{Tst}{Tm}$$

$$= (20.031)(.9980) \frac{(29.960 + 1.5000/13.6)}{(29.92)} \frac{(528)}{(556.)}$$

$$= 19.07957$$

$$Bws = \frac{Vw}{Vw + Vmstd} = \frac{(3.64110)}{(3.64110 + 19.07957)} = .1603$$

Emission Testing Services, Inc.
P.O. Box 15075
Baton Rouge, LA 70895
504-925-8405

Client : AMOCO
Source : 83-01
Testing Date : 9- 7-89
Run : 2

DETERMINATION OF DRY MOLECULAR WEIGHT

Md - Dry molecular weight, lb/ lb-mole
%CO2 - Percent CO2 by volume (dry basis)
%O2 - Percent O2 by volume (dry basis)
%CO - Percent CO by volume (dry basis)
%N2 - Percent N2 by volume (dry basis)
0.280 - Molecular weight of N2 or CO, divided by 100
0.320 - Molecular weight of O2, divided by 100
0.440 - Molecular weight of CO2, divided by 100

$$Md = 0.440(\%CO2) + 0.320(\%O2) + 0.280(\%N2 + \%CO)$$

$$Md = 0.440(6.4) + 0.320(5.0) + 0.280(88.6 + .0)$$

$$= 29.224$$

Emission Testing Services, Inc.
P.O. Box 15075
Baton Rouge, LA 70895
504-925-8405

Client : AMOCO
Source : 83-01
Testing Date : 9- 7-89
Run : 2

DETERMINATION OF STACK GAS VELOCITY AND VOLUMETRIC FLOW RATE

A - Cross-sectional area of stack, ft2
Bws - Moisture fraction of stack gas
Cp - Pitot tube coefficient
dP - Avg., square root of velocity head, (in-H2O)**0.5
Kp - Pitot tube constant,
ft/sec (lb in-Hg/ lb-mole deg R in H2O)**0.5
Md - Molecular weight of stack gas, dry basis, lb/ lb-mole
Ms - Molecular weight of stack gas, wet basis, lb/ lb-mole
Pbar - Barometric pressure at measurement site, in-Hg
Pg - Static pressure of the stack gas, in H2O
Ps - Absolute stack gas pressure, in-Hg
Pstd - Standard absolute pressure, 29.92 in-Hg
Acf - Actual stack gas flow rate, ACF/min
Qsd - Dry volumetric stack gas flow rate
standard conditions, DSCF/Hr
Ts - Average stack gas temperature, deg R
Tstd - Standard absolute temperature, 528 deg R
Vs - Average stack gas velocity, ft/sec
3600 - Conversion factor, sec to Hr
18.0 - Molecular weight of water, lb/lb-mole

$$Ms = Md\ (1 - Bws) + 18.0\ (Bws) =$$

$$= (29.224)(1 - .1603) + (18.0)(.1603) = 27.425$$

$$Vs = Kp\ Cp\ dP \left(\frac{Ts}{Ps\ Ms}\right)^{0.5} =$$

$$= (85.49)(.8220)(1.0204)\left(\frac{1283.}{[29.928][27.425]}\right)^{0.5} = 89.6533$$

$$Acf = (60)(Vs)(A) = (60)(89.6533)(.7854) = 4224.8$$

$$Qsd = 3600\ (1 - Bws)\ Vs\ A\ \frac{Tstd}{Ts}\ \frac{Ps}{Pstd} =$$

$$Qsd = 3600(1 - .1603)(89.6533)(.7854)\frac{(528)(29.928)}{(1283.)(29.92)}$$

= 87624.2 DSCFH
= 1460.4 DSCFM

CROSS SECTIONAL SCHEMATIC OF STACK TRAVERSE POINT LAYOUT

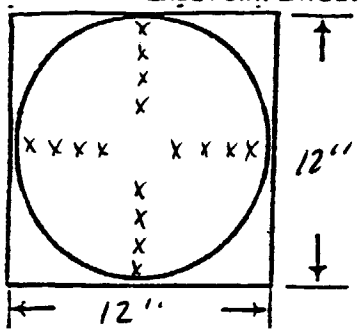

ETS FIELD DATA, METHOD(S) 1-4

PLANT Amoco
DATE 090889
LOCATION Denham Springs, LA
OPERATOR K. Thibodeaux
STACK NO. B3-01
RUN NO. 3

SAMPLE BOX NO. BT
METER BOX NO. 481
AMBIENT TEMPERATURE 81°F
BAROMETRIC PRESSURE 30.01
FILTER TARE wt mg —
PROBE LENGTH, in. 36

STACK DIAMETER, in. 12.0
PITOT TUBE NO. P-3-1
PITOT FACTOR 0.822
METER Δ Hₒ 1.890
D.G.M.C. FACTOR 0.998
K FACTOR —

TRAVERSE POINT NUMBER	SAMPLING TIME (θ), min.	STATIC PRESSURE (in.H₂O)	STACK TEMP (Ts), °F	VELOCITY HEAD (ΔPs)	(√ΔPs)	PRESSURE DIFFERENTIAL ACROSS ORIFICE METER (ΔH) in. H₂O ACTUAL	DESIRED	75 GAS SAMPLE VOLUME (Vm), ft³	GAS SAMPLE TEMPERATURE AT DRY GAS METER INLET (Tmin), °F	OUTLET (Tmout), °F	SAMPLE BOX TEMPERATURE °F	TEMPERATURE OF GAS LEAVING CONDENSER OR LAST IMPINGER F	PUMP VACUUM in. Hg gauge
1	0856	-0.325	820	.715	.846	1.5	1.5	654.850	92	91	270	64	5.0
2			812	.590	.768								
3	0927		808	.570	.755	1.5	1.5	675.864	105	90	253	62	5.0
4			799	.645	.803								
5			799	.640	.800								
6			797	.705	.840								
7			797	.715	.846								
8			796	.725	.851								
9			797	.720	.848								
10			796	.755	.869								
11			798	.640	.800								
12			804	.595	.771								
13			825	.650	.806								
14			830	.720	.848								
15			830	.805	.897								
16			771	.895	.964			21.014					
AVERAGE	31 min	-0.325	804.94		.831	1.5		[illegible]	94.5				

VOLUME OF LIQUID WATER COLLECTED	IMPINGER WEIGHTS			
FINAL	702.9	556.6	464.5	609.1
INITIAL	657.2	551.6	464.9	604.7
WEIGHT COLLECTED	45.7	5.0	-0.4	4.4
TOTAL WEIGHT				54.7

ORSAT MEASUREMENT

	CO_2	O_2	CO	N_2
1	6.2	9.7	0.0	89.1
2				
3				
4				

COMMENTS:

PRE-LEAK CHECK GOOD @ 11.5" Hg - 0.010 ft³/min
POST-LEAK CHECK GOOD @ 7.0" Hg - 0.009 ft³/min

Emission Testing Services, Inc.
P.O. Box 15075
Baton Rouge, LA 70895
504-925-8405

Client : AMOCO
Source : 83-01
Testing Date : 9- 8-89
Run : 3

DETERMINATION OF STACK GAS MOISTURE CONTENT

Bws - Moisture fraction content
dH - Pressure differential across meter orifice, in H2O
Mw - Molecular weight of water, 18.0 lb/ lb mole
Pb - Barometric pressure at meter, in-Hg
Pst - Standard absolute pressure, 29.92 in-Hg
R - Ideal gas constant, 21.85 in-Hg ft3/ lb-mole deg R
Tm - Absolute temperature at meter, deg R
Tst - Standard absolute temperature, 528 deg R
Vm - Dry gas volume measured by meter, DCF
Vmstd- Dry gas volume at standard conditions, DSCF
Vw - Volume of water vapor collected, SCF
Wwc - Weight of water vapor collected, lb
I1w, I2w, I3w, weight of water condensed by impingers, g
SGw, weight of water collected by silica gel, g
Y - Dry gas meter calibration factor

$$Wwc = (I1w + I2w + I3w + SGw) / (453.6\ g/lb)$$

$$= (45.7 + 5.0 + -.4 + 4.4) / (453.6) = .12059$$

$$Vw = \frac{Wwc\ R\ Tst}{Pst\ Mw} = \frac{(.12059)(21.85)(528)}{(29.92)(18.0)} = 2.58324$$

$$Vmstd = Vm\ Y \frac{(Pb + dH/13.6)}{Pst} \frac{Tst}{Tm}$$

$$= (21.014)(.9980) \frac{(30.010 + 1.5000/13.6)}{(29.92)} \frac{(528)}{(555.)}$$

$$= 20.10342$$

$$Bws = \frac{Vw}{Vw + Vmstd} = \frac{(2.58324)}{(2.58324 + 20.10342)} = .1139$$

Emission Testing Services, Inc.
P.O. Box 15075
Baton Rouge, LA 70895
504-925-8405

Client : AMOCO
Source : 83-01
Testing Date : 9- 8-89
Run : 3

DETERMINATION OF DRY MOLECULAR WEIGHT

Md - Dry molecular weight, lb/ lb-mole
%CO2 - Percent CO2 by volume (dry basis)
%O2 - Percent O2 by volume (dry basis)
%CO - Percent CO by volume (dry basis)
%N2 - Percent N2 by volume (dry basis)
0.280 - Molecular weight of N2 or CO, divided by 100
0.320 - Molecular weight of O2, divided by 100
0.440 - Molecular weight of CO2, divided by 100

$$Md = 0.440(\%CO2) + 0.320(\%O2) + 0.280(\%N2 + \%CO)$$

$$Md = 0.440(6.2) + 0.320(4.7) + 0.280(89.1 + .0)$$

$$= 29.180$$

Emission Testing Services, Inc.
P.O. Box 15075
Baton Rouge, LA 70895
504-925-8405

Client : AMOCO
Source : 83-01
Testing Date : 9- 8-89
Run : 3

DETERMINATION OF STACK GAS VELOCITY AND VOLUMETRIC FLOW RATE

A - Cross-sectional area of stack, ft2
Bws - Moisture fraction of stack gas
Cp - Pitot tube coefficient
dP - Avg., square root of velocity head, (in-H2O)**0.5
Kp - Pitot tube constant,
ft/sec (lb in-Hg/ lb-mole deg R in H20)**0.5
Md - Molecular weight of stack gas, dry basis, lb/ lb-mole
Ms - Molecular weight of stack gas, wet basis, lb/ lb-mole
Pbar - Barometric pressure at measurement site, in-Hg
Pg - Static pressure of the stack gas, in H2O
Ps - Absolute stack gas pressure, in-Hg
Pstd - Standard absolute pressure, 29.92 in-Hg
Acf - Actual stack gas flow rate, ACF/min
Qsd - Dry volumetric stack gas flow rate
standard conditions, DSCF/Hr
Ts - Average stack gas temperature, deg R
Tstd - Standard absolute temperature, 528 deg R
Vs - Average stack gas velocity, ft/sec
3600 - Conversion factor, sec to Hr
18.0 - Molecular weight of water, lb/lb-mole

$$Ms = Md (1 - Bws) + 18.0 (Bws) =$$

$$= (29.180)(1 - .1139) + (18.0)(.1139) = 27.907$$

$$Vs = Kp\ Cp\ dP \left(\frac{Ts}{Ps\ Ms}\right)^{0.5} =$$

$$=(85.49)(.8220)(.8310)\left(\frac{1265.}{[29.986][27.907]}\right)^{0.5} = 71.7932$$

$$Acf = (60)(Vs)(A)= (60)(71.7932)(.7854) = 3383.2$$

$$Qsd = 3600 (1 - Bws) Vs A \frac{Tstd}{Ts} \frac{Ps}{Pstd} =$$

$$Qsd = 3600(1 - .1139)(71.7932)(.7854)\frac{(528)(29.986)}{(1265.)(29.92)}$$

= 75248.5 DSCFH 241.9
= 1254.1 DSCFM

Emission Testing Services, Inc.
P.O. Box 15075
Baton Rouge, LA 70895
504-925-8405

Client : AMOCO
Source : 83-01
Testing Date : 9/7-8/89
Run : 1-3

OXIDES OF NITROGEN EMISSION RATE

ENOX - Oxides of nitrogen emission rate as NO2, lb/Hr
F - NO2 Conv. factor, 1.1948 X 10-7 (lb/ft3)/(PPM)
NOXms - NOX concentration as measured, PPM
Qsd - Dry volumetric stack gas flow rate, DSCF/Hr

ENOX = (NOXms)(F)(Qsd)

-------- RUN 1 --------

ENOX = (1496.33)(1.1948 X 10-7)(79875.4) = 14.280

-------- RUN 2 --------

ENOX = (972.33)(1.1948 X 10-7)(87624.2) = 10.180

-------- RUN 3 --------

ENOX = (814.00)(1.1948 X 10-7)(75248.5) = 7.318

METHOD 7E DATA SHEET

COMPANY Amoco SOURCE # B3-01 DATE 8-7-89

PARAMETER NOx LOAD% Max 880PPH RUN NUMBER #1

CALIBRATION STATISTICS

Cylinder Value		Analyzer Response mv	ppm	Absolute Difference mv	ppm	% Drift ±2%
Zero	N_2	.05 (1000 ppm)	.01 (2500 ppm) 10.8	.07	25.0	0.6
Mid	606.17	5.95	2.90 577.2	2.46	591.6	0.6
High	895.5	9.10	3.87 913.7	3.69	884.5	-1.2

Calibration curve: ppm = (response mv)(slope) + intercept

Slope 236.97661 Intercept 8.43524 Span Range 2378.2

.99846

Analyzer Cal		Init. Analyzer Resp. mv	ppm	Bias ±5	Final Analyzer Resp. mv	ppm	Bias ±5	Drift ±3
Conc.	8 or 913.7	3.76	899.5	-.60	3.74	895	-.19	____

Sys. Cal. Bias = $\frac{\text{Sys. cal. (ppm)} - \text{analyzer cal. (ppm)}}{\text{Span (ppm)}} \times 100$

%Drift = $\frac{\text{Final sys. resp. (ppm)} - \text{Initial sys. resp. (ppm)}}{\text{span (ppm)}} \times 100$

TEST DATA

Start time 14:48 Finish time 15:48 Minutes per point 2

Test Point ~~mv~~ ppm Sample port _____

1	1451	11	1627	21	1529
2	1561	12	1620	22	1684
3	1430	13	1472	23	1524
4	1268	14	1436	24	1530
5	1421	15	1359	25	1584
6	1335	16	1507	26	1254
7	1437	17	1434	27	1467
8	1546	18	1851	28	1501
9	1480	19	1646	29	1386
10	1323	20	1212	30	1515

Ave. mv ____

Ave. conc. 1496 ppm

COMMENTS: 1566 1477

METHOD 7E DATA SHEET

COMPANY Amoco SOURCE # P3-01 DATE 9-7-89

PARAMETER NOx LOAD% Max load / 880 RPM RUN NUMBER 2

CALIBRATION STATISTICS

Cylinder Value		Analyzer Response mv	ppm	Absolute Difference mv	ppm	% Drift ±2%
Zero	N_2	.07	3.3	.04	-1.88	____
Mid	606.17	2.46	596.5	2.63	639	____
High	895.5	3.69	901.9	3.78	921	____

Calibration ~~curve~~: ppm = (response mv)(slope) + intercept

Slope 248.2283 Intercept -14.1073 Span Range 2468.2

Analyzer Cal	Init. Analyzer Resp. mv	ppm	Bias ±5	Final Analyzer Resp. mv	ppm	Bias ±5	Drift ±3
Conc. 901.9	3.74	914.2	.50	3.68	901	____	____

Sys. Cal. Bias = $\frac{\text{Sys. cal. (ppm)} - \text{analyzer cal. (ppm)}}{\text{Span (ppm)}} \times 100$

%Drift = $\frac{\text{Final sys. resp. (ppm)} - \text{Initial sys. resp. (ppm)}}{\text{span (ppm)}} \times 100$

TEST DATA

Start time 12:18 Finish time _____ Minutes per point 2

Test Point mv Sample port _____

1	929	11	825	21	980
2	1327	12	976	22	1140
3	836	13	955	23	1027
4	775	14	1037	24	1070
5	969	15	1016	25	1118
6	769	16	1018	26	1154
7	658	17	1210	27	1017
8	969	18	1244	28	1273
9	1223	19	1134	29	1144
10	~~925~~ 933	20	935	30	1104

Ave. mv ____

Ave. conc. ~~1191.02~~ ppm 972.33

COMMENTS:

METHOD 7E DATA SHEET

COMPANY Amoco SOURCE # F 3-01 DATE 9-8-89

PARAMETER NO_x LOAD% Low load RVM RUN NUMBER 3

CALIBRATION STATISTICS

Cylinder Value		Analyzer Response ~~mv~~	ppm	Absolute Difference mv	ppm	% Drift ±2%
Zero	N_2	.05	3.3	.01	-5.3	-0.4
Mid	895.5	4.15	887.6	4.28	915.6	1.3
High	1512	7.09	1521.6	6.98	1482.8	-1.8

Calibration curve: ppm = (response mv)(slope) + intercept

Slope 215.6688 Intercept -7.47 Span Range 2149.2

Analyzer Cal	Init. Analyzer Resp. mv	ppm	Bias ±5	Final Analyzer Resp. mv	ppm	Bias ±5	Drift ±3
Conc. 1521.6	6.87	1474.2	-2.21	6.76	1450.5	-3.2	1.1

Sys. Cal. Bias = $\frac{\text{Sys. cal. (ppm)} - \text{analyzer cal. (ppm)}}{\text{Span (ppm)}} \times 100$

%Drift = $\frac{\text{Final sys. resp. (ppm)} - \text{Initial sys. resp. (ppm)}}{\text{span (ppm)}} \times 100$

TEST DATA

Start time 08:45 Finish time 09:45 Minutes per point 5 min average

Test Point ~~mv~~ ppm Sample port _____

1	826	11	984	21	722
2	716	12	952	22	674
3	852	13	828	23	746
4	263	14	884	24	812
5		15		25	
6		16		26	
7		17		27	
8		18		28	
9		19		29	
10		20		30	

Ave. mv _____

Ave. conc. 814 ppm

COMMENTS:

5 min average

Emission Testing Services, Inc.
P.O. Box 15075
Baton Rouge, LA 70895
504-925-8405

Client : AMOCO
Source : 83-01
Testing Date : 9/7-8/89
Run : 1-3

CARBON MONOXIDE EMISSION RATE

ECO - Carbon Monoxide Emission Rate - lb/hr
F - CO conv. factor, 7.2727 X 10-8 (lb/ft3)/(PPM)
COms - Concentration of carbon monoxide as measured - PPM
Qsd - Dry volumetric stack gas flow rate, DSCF/hr

ECO = (COms)(F)(Qsd)

-------- RUN 1 --------

ECO = (230.3)(7.2727 X 10-8)(79875.4) = 1.338

-------- RUN 2 --------

ECO = (216.6)(7.2727 X 10-8)(87624.2) = 1.380

-------- RUN 3 --------

ECO = (220.9)(7.2727 X 10-8)(75248.5) = 1.209

ETS

METHOD 10 DATA SHEET

COMPANY Amoco SOURCE # 8301 DATE 7-7-89

PARAMETER CO LOAD% Max 880 RPM RUN NUMBER #1

CALIBRATION STATISTICS

	Cylinder Value	Initial Analyzer Response mv	Initial Analyzer Response ppm	Final Analyzer Response mv	Final Analyzer Response ppm	%Drift
Zero	N_2	0.00	1.96	0.00	1.96	0.0
Low	90.31	.87	88.2	.92	92.9	.47
Mid	201.74	2.01	201.2	2.02	202	.1
High	401.6	4.04	402.3	4.05	404.2	0.0

Calibration curve: ppm = (response mv)(slope) + intercept

Slope 99.10535 Intercept 1.96025 Span Range 993.0

.99995

$$\%Drift = \frac{\text{Final response (ppm)} - \text{Initial response (ppm)}}{\text{Span (ppm)}} \times 100$$

TEST DATA

Start time 1448 Finish time 1548 Minutes per point 2

Test Point ~~mv~~ ppm Sample port _____

1	225	11	240	21	213
2	241	12	238	22	212
3	238	13	232	23	214
4	234	14	221	24	219
5	220	15	218	25	220
6	253	16	249	26	220
7	221	17	245	27	249
8	227	18	215	28	248
9	236	19	243	29	221
10	228	20	224	30	241
	232.3		232.1		

Ave. mv _____

Ave. conc. 230.3 ppm

COMMENTS:

880 RPM

ETS

METHOD 10 DATA SHEET

COMPANY Amoco SOURCE # 83-01 DATE 9-7-89

PARAMETER CO LOAD% Max 880 RPM RUN NUMBER 2

CALIBRATION STATISTICS

	Cylinder Value	Initial Analyzer Response mv	Initial Analyzer Response ppm	Final Analyzer Response mv	Final Analyzer Response ppm	%Drift
Zero	N	0.0	-.1	.00	-.1	
Low	90.31	.92	91.3	.90	90.	
Mid	201.74	2.02	200.5	2.02	201	
High	401.6	4.05	402.0	4.05	402	

Calibration curve: ppm = (response mv)(slope) + intercept 99.88998

Slope 99.2867 37 Intercept -0.0910729 Span Range 992.8

$$\%Drift = \frac{\text{Final response (ppm)} - \text{Initial response (ppm)}}{\text{Span (ppm)}} \times 100$$

TEST DATA

Start time 12:18 Finish time _____ Minutes per point 2

Test Point mv Sample port _____

1	234	11	214	21	210
2	201	12	208	22	231
3	210	13	208	23	225
4	227	14	205	24	219
5	207	15	218	25	243
6	211	16	210	26	210
7	205	17	215	27	222
8	223	18	203	28	221
9	220	19	227	29	222
38 10	208	56 20	223	16 30	222
	214.6		212.7		222.5

Ave. mv ~~214.6~~

Ave. conc. ~~21,505.4~~ ppm 216.6 ppm

COMMENTS:

ETS

METHOD 10 DATA SHEET

COMPANY Amoco SOURCE # F3-01 DATE 9-8-89

PARAMETER CO LOAD% Min load 803 RPM RUN NUMBER 3

CALIBRATION STATISTICS

	Cylinder Value	Initial Analyzer Response mv	Initial Analyzer Response ppm	Final Analyzer Response mv	Final Analyzer Response ppm	%Drift
Zero	N_2	0.0	1.9	-.01	1.0	-0.1
Low	201.94	2.03	199.6	2.02	198.6	-0.1
Mid	401.6	4.09	400.7	4.10	401.1	0.1
High	603	6.19	604.6	6.11	596.9	-0.8

Calibration curve: ppm = (response mv)(slope) + intercept

r=.99997

Slope 97.36984 Intercept 1.92832 Span Range 975.6

$$\%Drift = \frac{\text{Final response (ppm)} - \text{Initial response (ppm)}}{\text{Span (ppm)}} \times 100$$

TEST DATA

Start time 0845 Finish time 0945 Minutes per point 5 min average

Test Point ~~mv~~ ppm

Sample port _____

1	218	11	222	21	224
2	219	12	220	22	221
3	219	13	220	23	222
4	222	14	221	24	223
5		15		25	
6		16		26	
7		17		27	
8		18		28	
9		19		29	
10		20		30	

Ave. mv _____

Ave. conc. 220.92 ppm

COMMENTS:

5 min average

Test analyzer response, Method 3a, 7E & 10, was recorded by a computer data acquisition system. One minute average data were printed as recorded and served as a hardcopy record of the test data. Presented on the following pages are the computer print outs of the test data.

Each test analyzer is calibrated before and after each test run by challenging the analyzer with a set of certified calibration gases. Analyzer response is recorded by a computer data acquisition system. Calibration data sheets are manually completed as the calibrations are performed serving as hardcopy records of the calibration. Calibration results are taken from the computer system to avoid any data acquisition bias. Analyzer calibration data sheets are presented following the test data.

Control E6 Turbine

Run Title: AMOCO PRODUCTION
Date: 9/ 7/1989 RUN #1 MAXIMUM LOAD 880 RPM

Time	CO PPM		NOX PPM		O2 %
14:47:54	240.588	OK	1551.239	PERMIT LIMIT	4.1783
14:48:54	221.226	OK	1582.489	PERMIT LIMIT	4.2034
14:49:54	246.396	OK	1305.872	PERMIT LIMIT	4.0656
14:50:54	242.524	OK	1301.243	PERMIT LIMIT	4.2911
14:52:54	222.194	OK	1285.039	PERMIT LIMIT	4.4413
14:53:54	248.332	OK	1268.836	PERMIT LIMIT	4.3537
14:54:54	220.742	OK	1274.623	PERMIT LIMIT	4.4789
14:57:54	222.678	OK	1104.486	PERMIT LIMIT	4.1783
14:58:54	244.944	OK	1257.262	PERMIT LIMIT	4.3787
14:59:54	221.226	OK	1309.344	OK	4.3286
15:02:54	227.519	OK	1458.648	OK	4.6542
15:03:55	212.030	OK	1315.131	OK	4.7544
15:04:55	218.322	OK	1454.018	OK	4.5290
15:05:55	209.126	OK	1532.721	OK	4.7294
15:07:55	214.934	OK	1272.308	OK	4.3537
15:08:55	213.966	OK	1797.764	OK	3.9153
15:09:55	217.354	OK	1394.991	OK	4.3662
15:10:55	217.838	OK	1375.316	OK	4.2410
15:11:55	224.130	OK	1434.343	OK	4.2911
15:12:55	239.135	OK	1408.880	OK	4.2410
15:14:55	251.236	OK	1158.883	OK	4.4539
15:15:55	218.322	OK	1408.880	OK	4.1282
15:16:55	222.194	OK	1286.196	OK	4.3412
15:17:55	235.747	OK	1460.963	OK	3.9654
15:18:55	222.678	OK	1243.373	OK	4.4539
15:19:55	244.460	OK	1274.623	OK	4.3537
15:20:55	241.556	OK	1635.729	OK	3.9905
15:22:55	237.683	OK	1398.464	OK	4.3036
15:23:55	216.386	OK	1673.923	OK	3.8903
15:24:55	245.912	OK	1415.824	OK	3.9654
15:25:55	217.838	OK	1521.147	OK	3.9028
15:26:55	220.742	OK	1747.996	OK	3.8527
15:27:55	242.524	OK	1457.491	OK	4.3036
15:28:55	221.226	OK	1285.039	OK	4.3912
15:29:55	220.742	OK	1634.572	OK	4.2660
15:30:55	218.322	OK	1407.723	OK	4.3787
15:31:56	246.880	OK	1428.556	OK	4.4539
15:32:56	214.934	OK	1765.357	OK	3.8277
15:33:56	214.450	OK	1545.452	OK	4.4038
15:34:56	229.939	OK	1979.475	OK	3.8277
15:35:56	214.450	OK	1478.324	OK	4.4163
15:36:56	213.482	OK	1318.603	OK	4.4288
15:37:56	229.455	OK	1393.834	OK	4.3912
15:38:56	218.806	OK	1585.961	OK	3.9780
15:41:56	228.487	OK	1437.815	OK	4.2660
15:42:56	220.258	OK	1518.832	OK	4.2034
15:43:56	239.619	OK	1385.732	OK	4.5791
15:44:56	244.944	OK	1602.165	OK	4.1533
15:45:56	238.651	OK	1553.554	OK	4.0030
15:46:56	219.290	OK	1751.468	OK	3.8652
15:47:56	249.300	OK	1582.489	OK	3.9404
15:48:56	216.386	OK	1352.168	OK	4.1909

Run Title: AMOCO PRODUCTION
Date: 9/ 7/1989 RUN #2 MAXIMUM LOAD 880 RPM

Time	CO PPM		NOX PPM		O2 %
17:13:54	209.878	OK	1038.215	OK	4.75034
17:16:54	206.484	OK	730.279	NEG DRIFT	4.71304
17:17:54	212.303	OK	1153.388	OK	4.15352
17:18:54	212.787	OK	772.711	NEG DRIFT	4.80008
17:19:54	205.999	OK	747.251	NEG DRIFT	4.86225
17:20:54	220.061	OK	783.622	NEG DRIFT	4.86225
17:21:54	234.609	OK	812.718	OK	4.72547
17:22:54	207.938	OK	712.093	NEG DRIFT	4.84981
17:23:54	206.484	OK	943.652	OK	4.73791
17:24:54	226.365	OK	851.513	OK	4.84981
17:25:54	216.182	OK	892.733	OK	4.75034
17:26:54	222.971	OK	790.896	NEG DRIFT	4.83738
17:27:54	226.850	OK	690.271	NEG DRIFT	5.09849
17:28:54	198.725	OK	682.997	NEG DRIFT	5.09849
17:29:54	211.333	OK	687.846	NEG DRIFT	5.08605
17:30:54	216.182	OK	844.239	OK	4.77521
17:31:54	199.695	OK	742.402	NEG DRIFT	4.87468
17:32:54	229.760	OK	884.247	OK	4.82494
17:33:55	205.029	OK	914.555	OK	4.50167
17:34:55	219.576	OK	1164.299	OK	4.65087
17:35:55	218.606	OK	876.973	OK	4.94928
17:36:55	228.305	OK	912.131	OK	4.93685
17:38:55	211.818	OK	826.054	OK	5.04875
17:39:55	205.999	OK	952.138	OK	4.71304
17:41:55	233.154	OK	918.192	OK	4.93685
17:42:55	218.606	OK	936.378	OK	4.87468
17:43:55	205.029	OK	947.289	OK	4.97415
17:44:55	235.579	OK	1096.408	OK	4.83738
17:45:55	226.365	OK	1041.852	OK	4.62600
17:46:55	228.790	OK	786.047	NEG DRIFT	4.99902
17:47:55	206.968	OK	1018.817	OK	4.81251
17:48:56	223.456	OK	1126.716	OK	4.57627
17:49:56	215.212	OK	1160.662	OK	4.71304
17:50:56	226.850	OK	1192.183	OK	4.48923
17:51:56	206.484	OK	1148.539	OK	4.63844
17:52:56	217.637	OK	1329.179	OK	4.55140
17:54:56	219.576	OK	856.363	OK	5.09849
17:55:56	234.124	OK	834.540	OK	5.11092
17:56:56	218.122	OK	771.498	NEG DRIFT	5.08605
17:57:56	230.729	OK	947.289	OK	4.89955
17:58:56	206.484	OK	961.837	OK	4.80008
17:59:56	231.214	OK	1069.736	OK	4.65087
18:01:56	226.365	OK	1083.072	OK	4.55140
18:02:56	210.363	OK	963.049	OK	4.72547
18:04:56	206.968	OK	1020.030	OK	4.68817
18:05:56	228.305	OK	1118.230	OK	4.50167
18:06:56	235.094	OK	1221.280	OK	4.40220
18:07:56	210.848	OK	1039.427	OK	4.81251
18:08:56	217.637	OK	1158.237	OK	4.62600
18:09:56	214.727	OK	1112.168	OK	4.50167
18:10:56	213.272	OK	1052.763	OK	4.60114

18:11:56	225.880	OK	1212.793	OK	4.48923
18:12:57	204.059	OK	1069.736	OK	4.86225
18:13:57	213.757	OK	1144.902	OK	4.60114
18:14:57	234.609	OK	1085.497	OK	4.62600
18:15:57	236.063	OK	1096.408	OK	4.63844

END TEST
CALIBRATION

18:16:57	172.539	OK	10.144	NEG DRIFT	0.18717
18:17:57	-8.820	NEG DRIFT	-16.528	NEG DRIFT	-0.01177
18:18:57	16.881	OK	-1.980	NEG DRIFT	11.68835
18:19:57	-9.789	NEG DRIFT	-0.767	NEG DRIFT	12.14839
18:20:57	76.526	OK	690.271	NEG DRIFT	19.94432
18:21:57	93.498	OK	718.155	NEG DRIFT	20.50384
18:22:57	75.556	OK	721.792	NEG DRIFT	4.77521
18:23:57	100.287	OK	681.785	NEG DRIFT	4.61357
18:24:57	195.330	OK	682.997	NEG DRIFT	4.78764
18:25:57	202.604	OK	852.726	OK	4.60114
18:26:57	-8.820	NEG DRIFT	1075.798	OK	4.84981
18:27:57	420.332	OK	701.182	NEG DRIFT	4.66331
18:28:57	260.309	OK	721.792	NEG DRIFT	4.71304
18:29:57	-11.729	NEG DRIFT	684.209	NEG DRIFT	4.58870
18:30:58	7.668	OK	577.523	NEG DRIFT	4.68817
18:31:58	8.153	OK	933.953	OK	4.56384
18:32:58	-0.091	NEG DRIFT	1563.162	OK	4.29029
18:33:58	-10.274	NEG DRIFT	125.317	NEG DRIFT	19.42211
18:34:58	-10.759	NEG DRIFT	1062.462	OK	0.39855
18:35:58	-11.729	NEG DRIFT	1051.551	OK	0.41098
18:36:58	-8.820	NEG DRIFT	1044.277	OK	0.51045
18:37:58	-9.304	NEG DRIFT	786.047	NEG DRIFT	5.93154
18:38:58	7.668	OK	886.671	OK	3.83025
18:39:58	-6.395	NEG DRIFT	-37.138	NEG DRIFT	20.65304
18:40:58	30.459	OK	11.356	NEG DRIFT	20.78981
18:41:58	-17.063	NEG DRIFT	-74.721	NEG DRIFT	20.78981
18:42:58	27.064	OK	61.062	NEG DRIFT	20.87685
18:43:58	-11.729	NEG DRIFT	-77.145	NEG DRIFT	20.77738
18:44:58	-25.307	NEG DRIFT	-78.358	NEG DRIFT	20.83955
18:45:58	-27.731	NEG DRIFT	-37.138	NEG DRIFT	20.96389
18:46:58	3.303	OK	-51.686	NEG DRIFT	20.80225
18:47:58	5.243	OK	-56.535	NEG DRIFT	20.82712
18:48:58	-28.701	NEG DRIFT	-84.419	NEG DRIFT	20.90172
18:49:58	-15.123	NEG DRIFT	18.630	NEG DRIFT	20.93902
18:50:58	29.489	OK	47.726	NEG DRIFT	20.86442
18:51:58	-23.367	NEG DRIFT	-77.145	NEG DRIFT	20.83955
18:52:58	12.517	OK	-17.740	NEG DRIFT	20.83955
18:53:58	-13.184	NEG DRIFT	793.321	NEG DRIFT	20.85198
18:54:58					

F3-01 Run #3 9-8-89 Low load

Run Title: AMOCO PRODUCTION
Date: 9/ 8/1989

Time	CO-VTS	NOx-VTS	O2-VTS	CO PPM	NOx PPM	O2 %
08:04:19	0.147	0.059	0.000	14.46	0.44L	-0.0615L
08:05:19	-0.122	0.034	0.010	-12.21L	-5.62L	-0.0366L
08:06:19	-0.103	-0.024	0.010	-10.27L	-20.17L	-0.0366L
08:07:19	0.166	0.151	0.000	16.40	23.48L	-0.0615L
08:08:19	0.059	-0.020	-0.005	5.73	-18.95L	-0.0739L
08:09:19	-0.034	-0.093	-0.010	-3.47L	-37.14L	-0.0864L
08:10:19	0.142	0.054	-0.005	13.97	-6.77L	-0.0739L
08:11:19	1.465	-0.127	0.010	145.36	-45.02L	-0.0366L
08:12:19	0.503	4.376	0.010	49.66	1072.16	-0.0366L
08:13:19	2.017	4.205	-0.005	200.18	1029.75	-0.0739L
08:14:19	1.934	4.103	1.021	191.94	1004.27	2.5371
08:15:19	2.154	4.269	4.713	213.76	1045.49	11.7370
08:16:19	1.965	4.059	4.737	196.79	993.36	11.7992
08:17:19	3.131	1.411	8.147	310.14	336.27L	20.6777
08:18:19	4.020	6.520	8.317	399.00	1604.38	21.1131
08:19:19	3.034	6.838	8.293	300.97	1683.18	21.0507
08:20:19	3.072	6.916	8.278	304.51	1702.58	21.0136
08:21:19	0.281	0.513	8.298	23.51H	113.19L	21.0634
08:22:19	0.100	0.999	8.278	005.57H	1723.19	21.0136
08:23:20	0.022	0.911	8.298	57.61	1701.37	21.0634
08:24:20	6.183	1.519	6.198	613.61H	362.94L	15.7167
08:25:20	2.052	3.048	3.034	203.22	891.02	7.1672
08:26:20	0.088	4.967	2.203	8.64	1218.85	5.5461
08:27:20	-0.078	6.442	0.181	-7.65L	1564.98	0.3985
08:28:20	0.034	6.838	0.171	3.30	1683.18	0.3737
08:29:20	-0.112	6.637	0.073	-11.24L	1633.46	0.1250L
08:30:20	0.049	6.838	0.049	4.76	1683.18	0.0628L
08:31:20	-0.093	6.828	0.107	-9.30L	1680.76	0.2120L

Run Title: AMOCO PRODUCTION
Date: 9/ 8/1989

Start Purging

Time	CO-VTS	NOx-VTS	O2-VTS	CO PPM	NOx PPM	O2 %
08:47:16	2.271	3.731	1.865	223.06	797.27L	4.7577
08:48:16	2.281	3.456	1.871	224.01	736.29L	4.7201
08:49:16	2.305	5.031	1.734	226.39	1077.46	4.5097
08:50:16	2.183	4.674	1.685	214.39	1000.56	4.2445
08:51:16	2.291	3.580	1.851	224.90	764.62L	4.6701
08:52:16	2.100	0.737	1.812	206.44	151.56L	1.5097
08:53:17	2.310	4.347	1.792	226.87	927.73	4.5199
08:54:17	2.061	4.259	1.772	202.41	911.03	4.5144
08:55:17	2.129	3.985	1.802	209.23	852.05	4.5449
08:56:17	2.120	4.440	1.708	208.32	950.00	4.4573
08:57:17	2.159	-0.039	1.753	212.12	-15.50L	4.4198
08:58:17	2.159	4.088	1.807	212.12	874.17	4.5514
08:59:17	2.266	4.034	1.788	222.69	862.58	4.5074
09:00:17	2.354	0.054	1.792	231.10	1.14L	4.5197
09:01:18	2.325	4.464	1.748	228.27	955.27	4.4073
09:02:18	2.357	-0.015	1.753	231.32	-10.65L	4.4198
09:03:18	2.339	4.137	1.768	229.72	884.70	4.4573
09:04:18	2.120	3.468	1.832	208.32	740.54L	4.6200
09:05:18	2.178	-0.107	1.753	214.03	-30.64L	4.4198
09:06:18	2.178	5.519	1.641	215.23	1182.79	4.1320
09:07:18	2.335	5.201	1.714	229.24	1114.32	4.3197
09:08:18	2.374	0.205	1.812	233.06	50.72L	4.5697
09:09:18	2.090	5.200	1.709	205.47	1120.96	4.3072
09:10:19	2.320	5.216	1.651	227.86	1117.46	4.1570
09:11:19	2.120	3.907	1.797	208.32	838.17	4.5324
09:12:19	2.188	4.405	1.822	214.76	941.65	4.5750

09:15:17	2.276	4.271	1.833	[illegible]	[illegible]	4.6222
09:16:19	2.188	4.147	1.832	214.73	866.61	4.6200
09:17:19	2.281	4.366	1.841	224.01	934.20	4.6450
09:18:20	2.286	4.620	1.756	224.47	780.76	4.4322
09:19:20	2.105	3.853	1.841	206.87	625.61	4.6450
09:20:20	2.315	4.293	1.788	227.54	718.40	4.5074
09:21:20	2.256	3.751	1.832	221.64	801.49	4.6200
09:22:20	2.154	3.668	1.861	211.65	763.58L	4.6951
09:23:20	2.154	3.219	1.890	211.65	566.67L	4.7702
09:24:20	2.173	3.673	1.856	213.53	827.82	4.6826
09:25:21	2.403	3.736	1.890	235.90	778.33L	4.7702
09:26:21	2.505	3.609	1.836	245.89	770.74L	4.6325
09:27:21	2.369	3.551	1.832	232.57	758.30L	4.6200
09:28:21	2.242	3.189	1.910	220.21	660.35L	4.6262
09:29:21	2.095	3.126	1.929	205.74	666.66L	4.6703
09:30:21	2.134	4.098	1.841	209.75	876.27	4.6450
09:31:21	2.154	3.775	1.822	211.65	806.75	4.5750
09:32:21	2.164	3.209	1.910	212.66	654.57L	4.6262
09:33:21	2.295	0.029	1.871	225.44	-1.15L	4.7201
09:34:21	2.222	3.136	1.929	218.31	668.77L	4.6703
09:35:21	2.154	3.380	1.871	211.65	721.43L	4.7201
09:36:21	2.178	3.473	1.856	214.03	741.45L	4.6626
09:37:21	2.398	4.273	1.812	235.43	916.40	4.5699
09:38:21	2.222	3.922	1.768	218.31	836.35	4.4573
09:39:22	2.354	4.176	1.822	231.15	893.12	4.5750
09:40:22	2.188	3.634	1.846	214.78	776.21L	4.6575
09:41:22	2.393	3.673	1.832	234.95	827.82	4.6200
09:42:22	2.320	4.254	1.714	227.82	907.78	4.3177
09:43:22	2.166	3.243	1.880	213.06	671.94L	4.7451

End Of

09:44:22	2.222	4.151	1.812	218.31	867.66	4.5699
09:45:22	1.885	0.137	0.615	185.47	22.02L	1.5041
09:46:22	0.020	0.083	0.015	3.83	10.44L	-0.0331L
09:47:22	-0.015	0.068	0.010	0.50	7.28L	-0.0477L
09:48:22	-0.103	0.059	0.010	-8.06L	5.17L	-0.0477L
09:49:22	0.347	4.234	4.674	38.69	905.76	11.9031
09:50:22	0.899	4.166	4.733	87.13	891.02	12.0532
09:51:22	2.085	4.303	4.767	204.79	920.51	12.1408
09:52:23	1.973	4.205	4.747	194.05	899.44	12.0708
09:53:23	1.875	4.161	4.796	184.54	889.97	12.2157
09:54:23	2.071	6.115	7.443	203.56	1311.30	18.9984
09:55:23	3.424	6.877	8.112	335.29	1475.02	20.7128
09:56:23	4.166	6.979	8.195	407.56	1497.73	20.9255
09:57:23	5.944	6.862	8.200	560.56	1472.46	20.9381
09:58:23	6.071	6.735	8.175	573.04	1445.07	20.9156
09:59:23	6.032	6.876	8.205	569.24	1479.83	20.9506
10:00:23	5.966	6.286	0.586	564.76	1346.16	1.4290
10:01:23	6.007	6.557	0.220	566.62	1407.15	0.4904
10:02:24	6.173	6.750	0.137	601.72H	1448.23	0.2771L
10:03:24	3.076	0.557	7.199	305.43	112.61L	16.3727
10:04:24	0.147	0.433	7.951	16.29	82.28L	20.2799

Run Title: AMOCO PRODUCTION
Date: 9/ 8/1989

Time	CO-VTS	NOX-VTS	O2-VTS	CO PPM	NOX PPM	O2 %
10:30:31	0.054	0.264	8.215	7.16	49.41L	20.9756
10:31:31	-0.107	6.950	8.210	-8.03L	1471.41	20.9631
10:32:31	0.034	7.048	8.200	5.22	1512.46	20.9381
10:33:31	0.063	7.998	8.215	6.11	2148.67	20.9756
10:34:31	0.015	7.109	8.220	3.36	1956.99	20.9881
10:35:31	0.087	6.266	8.215	7.24	1543.79	20.9756
10:36:32	0.059	4.615	8.200	7.04	987.92	20.9381
10:37:32	-0.083	3.893	8.215	-6.16L	832.03	20.9756
10:38:32	-0.103	3.355	8.210	-8.06L	716.17L	20.9631
10:39:32	0.093	3.170	8.200	10.76	676.14L	20.9381
10:40:32	-0.039	3.023	8.220	-1.68L	644.54L	20.9881
10:41:32	-0.122	2.901	-0.005	-7.74L	616.21L	-0.0652L
10:42:33	0.156	0.044	-0.005	17.15	2.01L	-0.0652L
10:43:33	-0.066	-0.088	-0.005	-4.73L	-20.42L	-0.0652L
10:44:33	-0.147	-0.103	0.000	-12.34L	-25.39L	-0.0727L
10:45:33	-0.147	-0.083	1.006	-12.34L	-23.38L	1.5062
10:46:33	7.998	7.998	0.547	975.37H	2148.67	1.3287
10:47:33	7.865	7.998	0.137	734.45H	2148.67	0.2771L
10:48:33	5.097	7.998	0.425	476.41	2148.67	1.0160
10:49:34	2.603	7.998	0.835	256.16	2148.67	2.0672
10:50:34	1.641	0.093	0.913	164.72	1.54L	2.1674
10:51:34	1.287	7.998	1.040	127.48	2148.67	2.5926
10:52:34	1.143	7.998	1.065	113.21	2148.67	2.6353
10:53:34	1.035	7.998	1.094	102.79	2148.67	2.7304

--> AMOCO

08:55	219.0	716	4.5

08:56:17 0251 01 AMOCO 09/08/89

	01	02	03
CHAN	CO	NOX	O2
INITS	PPM	PPM	%
SCL	975.6	2149	25.5
ZERO	1.9	- 8	-0.1
08:05	1.9	-06	11.5
08:10	0.4	-08	-0.1
08:15	76.9	303	-0.1
08:20	248.2	774	13.1
08:25	497.5	1430	21.1
08:30	207.8	945	6.8
08:35	9.7	854	8.7
08:40	125.6	496	10.3
08:45	220.5F	884F	4.5F
08:50	217.6	826	4.5
08:55	219.0	716	4.5

--> AMOCO

09:00	219.0	852	4.5

09:00:01 0251 01 AMOCO 09/08/89

	01	02	03
CHAN	CO	NOX	O2
INITS	PPM	PPM	%
SCL	975.6	2149	25.5
ZERO	1.9	- 8	-0.1
08:05	1.9	-06	11.5
08:10	0.4	-08	-0.1
08:15	76.9	303	-0.1
08:20	248.2	774	13.1
08:25	497.5	1430	21.1
08:30	207.8	945	6.8
08:35	9.7	854	8.7
08:40	125.6	496	10.3
08:45	220.5F	884F	4.5F
08:50	217.6	826	4.5
08:55	219.0	716	4.5
09:00	219.0	852	4.5

Source P3-01
Run #3
Low Load

--> AMOCO

09:05	222.4	763	4.4

09:11:37 0251 01 AMOCO 09/08/89

UNITS	PPM	PPM	%
SCL	975.6	2149	25.5
ZERO	1.9	- 8	-0.1
09:05	222.4	763	4.4
09:10	221.5	984	4.4

--> AMOCO

09:15	220.0	952	4.4

--> AMOCO

09:20	219.5	828	4.5

09:23:18 0251 01 AMOCO 09/08/89

	01	02	03
CHAN	CO	NOX	O2
UNITS	PPM	PPM	%
SCL	975.6	2149	25.5
ZERO	1.9	- 8	-0.1
09:05	222.4	763	4.4
09:10	221.5	984	4.4
09:15	220.0	952	4.4
09:20	219.5	828	4.5

--> AMOCO

09:25	220.5	888	4.6

--> AMOCO

09:30	224.4	722	4.6

--> AMOCO

09:35	220.5	674	4.7

--> AMOCO

09:40	222.0	746	4.6

--> AMOCO

09:45	222.9	817	4.6

09:45:30 0251 01 AMOCO 09/08/89

	01	02	03
CHAN	CO	NOX	O2
UNITS	PPM	PPM	%
SCL	975.6	2149	25.5
ZERO	1.9	- 8	-0.1
09:05	222.4	763	4.4
09:10	221.5	984	4.4
09:15	220.0	952	4.4
09:20	219.5	828	4.5
09:25	220.5	888	4.6
09:30	224.4	722	4.6
09:35	220.5	674	4.7
09:40	222.0	746	4.6
09:45	222.9	817	4.6

--> AMOCO

9:50	86.2	249	1.8

--> AMOCO

9:55	133.8	849	11.2

--> AMOCO

10:00	392.4	1392	19.5

10:00:02 0251 01 AMOCO 09/08/89

	01	02	03
CHAN	CO	NOX	O2
UNITS	PPM	PPM	%
SCL	975.6	2149	25.5
ZERO	1.9	- 8	-0.1
9:05	222.4	763	4.4
9:10	221.5	984	4.4
09:15	220.0	952	4.4
9:20	219.5	828	4.5
9:25	220.5	888	4.6
09:30	224.4	722	4.6
09:35	220.5	674	4.7
9:40	222.0	746	4.6
09:45	222.9	817	4.6
09:50	86.2	249	1.8
9:55	133.8	849	11.2
0:00	392.4	1392	19.5

--> AMOCO

0:05	569.1	1209	8.1

[redacted] AMOCON

METHOD 3A DATA SHEET

COMPANY Chevron SOURCE # P301 DATE 9-7-88

PARAMETER O_2 LOAD% ~~P3-01~~ 11/14 RUN NUMBER #1

CALIBRATION STATISTICS

Cylinder Value		Analyzer Response v	Analyzer Response %	Absolute Difference v	Absolute Difference %	% Span ±2%
Zero	N_2	-0.00	0.00	0.0	-0.0	0.0
Mid	11.96	4.76	12.07	4.18	12.23	.6
High	20.9	8.20	20.98	8.20	20.98	0.0

Calibration curve: ppm = (response v)(slope) + intercept

Slope 2.54658 (.99996) Intercept -0.04778 Span Range 25.4

Analyzer Cal	Init. Analyzer Resp. v	ppm	Bias ±5	Final Analyzer Resp. v	ppm	Bias ±5	Span Drift ±3
Conc.							

Sys. Cal. Bias = $\frac{\text{Sys. cal. (ppm)} - \text{analyzer cal. (ppm)}}{\text{Span (ppm)}} \times 100$

%Drift = $\frac{\text{Final sys. resp. (ppm)} - \text{Initial sys. resp. (ppm)}}{\text{span (ppm)}} \times 100$

TEST DATA

Start time 14:48 Finish time 15:48 Minutes per point 2

Test Point ~~v~~ %

Sample port _____

1	4.06	11	4.32	21	4.0
2	4.11	12	4.40	22	4.0
3	4.5	13	4.54	23	4.41
4	4.3	14	4.27	24	4.30
5	4.35	15	3.96	25	4.05
6	4.11	16	4.04	26	4.22
7	4.27	17	4.34	27	4.05
8	4.49	18	3.75	28	4.02
9	4.39	19	4.06	29	3.76
10	4.50	20	3.72	30	4.12

Ave. v _____

Ave. conc. 4.10 %

COMMENTS:

METHOD 3A DATA SHEET

COMPANY Amoco SOURCE # F3-01 DATE 9-7-89

PARAMETER O_2 LOAD% Max load 880 kPH RUN NUMBER 2

CALIBRATION STATISTICS

	Cylinder Value	Analyzer Response v	Analyzer Response %	Absolute Difference v	Absolute Difference %	% Span ±2%
Zero	0	0.00	-0.06	0.00	-0.06	
Mid	11.96	4.78	12.10	0.11	4.79	
High	20.9	5.20	20.81	5.11	20.6	

Calibration curve: ppm = (response v)(slope) + intercept

Slope 2.5458 Intercept -0.0611 Span Range 25.4

R = .9999

Analyzer Cal	Init. Analyzer Resp. v	ppm	Bias ±5	Final Analyzer Resp. v	ppm	Bias ±5	Span Drift ±3
Conc.							

Sys. Cal. Bias = $\frac{\text{Sys. cal. (ppm)} - \text{analyzer cal. (ppm)}}{\text{Span (ppm)}}$ X 100

%Drift = $\frac{\text{Final sys. resp. (ppm)} - \text{Initial sys. resp. (ppm)}}{\text{span (ppm)}}$ X 100

TEST DATA

Start time 1748 Finish time 1618 Minutes per point 2

Test Point v Sample port

1	4.73	11	4.9	21	4.76
2	4.82	12	4.77	22	4.65
3	4.96	13	4.81	23	4.70
4	4.41	14	4.86	24	4.61
5	4.86	15	4.82	25	4.83
6	5.12	16	4.90	26	4.65
7	5.12	17	4.80	27	4.80
8	4.98	18	4.53	28	4.72
9	4.80	19	5.08	29	4.82
10	4.9	20	5.11	30	4.75
	4.9		4.8		4.7

Ave. v ~~4.8~~

Ave. conc. ~~12.7~~ % 4.82

COMMENTS:

METHOD 3A DATA SHEET

COMPANY Amoco SOURCE # E3-01 DATE 9-8-88

PARAMETER O_2 LOAD% Low load 803 MW RUN NUMBER 3

CALIBRATION STATISTICS

Cylinder Value		Analyzer Response v	Analyzer Response %	Absolute Difference v	Absolute Difference %	% Span ±2%
Zero	N_2	.01	-0.05	.01	-0.05	0.0
Mid	11.96	4.74	12.1	4.78	12.2	0.40
High	20.9	8.16	20.8	8.18	20.9	0.40

Calibration curve: ppm = (response v)(slope) + intercept

Slope 2.56221 Intercept -0.07269 Span Range 25.5

r = .99996

Analyzer Cal	Init. Analyzer Resp. v	ppm	Bias ±5	Final Analyzer Resp. v	ppm	Bias ±5	Span Drift ±3
Conc.							

Sys. Cal. Bias = $\frac{\text{Sys. cal. (ppm)} - \text{analyzer cal. (ppm)}}{\text{Span (ppm)}} \times 100$

%Drift = $\frac{\text{Final sys. resp. (ppm)} - \text{Initial sys. resp. (ppm)}}{\text{span (ppm)}} \times 100$

TEST DATA

Start time 0845 Finish time 0914:5 Minutes per point ____

Test Point ~~v~~ %

Sample port ____

1	4.5	11	4.4	21	4.6
2	4.5	12	4.4	22	4.7
3	4.5	13	4.5	23	4.6
4	4.4	14	4.6	24	4.6
5		15		25	
6		16		26	
7		17		27	
8		18		28	
9		19		29	
10		20		30	

Ave. v ____

Ave. conc. 4.525 %

COMMENTS:

5 min average

Traverse Point Layout

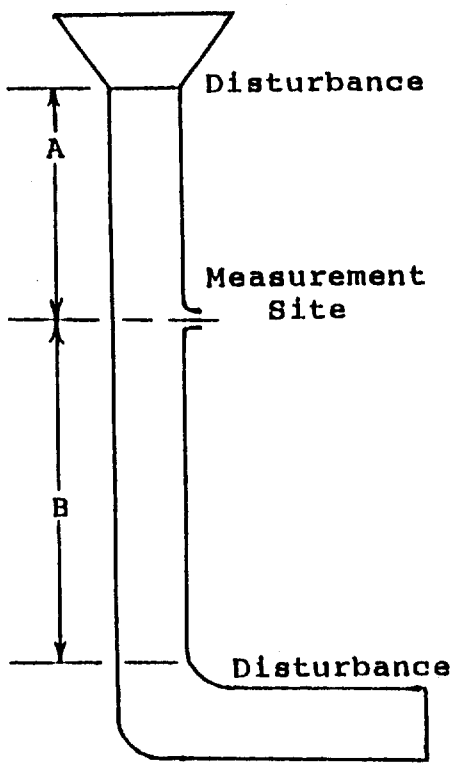

Client AMOCO

Date 10.30 89

Unit Tested 84-01

Location DENHAM SPRINGS, LA

Upstream Distance (A) 21.5"

Downstream Distance (B) 16"

Inside Diameter 13.5"

Coupling Length 12"

Coupling Type 3" SCREW-ON

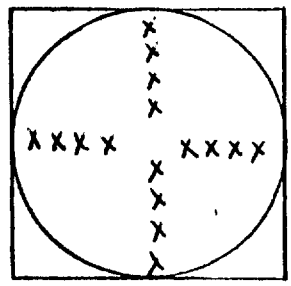

Cross Section Schematic of Stack

Traverse Point	Distance % of Diameter		Stack Diameter		Coupling Length		Traverse Points
1	0.032	x	13.5	+	12	=	~~12.43~~ 12.50
2	0.105						13.42
3	0.194						14.62
4	0.323						16.36
5	0.677						21.14
6	0.806						22.88
7	0.895						24.08
8	0.968		13.5		12		~~25.07~~ 25.00
9							
10							
11							
12							

CROSS SECTIONAL SCHEMATIC OF STACK
TRAVERSE POINT LAYOUT

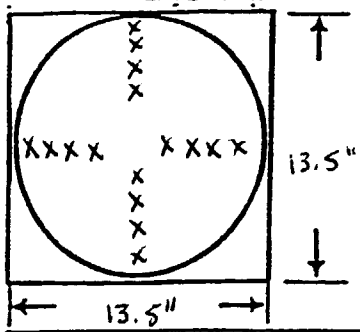

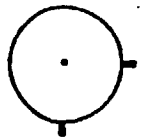

DRAW ARROW NORTH

E T S FIELD DATA, METHOD(S) 1-4

PLANT: AMOCO
DATE: 10 30 89
LOCATION: DENHAM SPRINGS, LA
OPERATOR: J. ANGELLOZ
STACK NO.: 84-01
RUN NO.: 1

SAMPLE BOX NO.: KA
METER BOX NO.: 481
AMBIENT TEMPERATURE: 81 °F
BAROMETRIC PRESSURE: 29.98
FILTER TARE wt mg: —
PROBE LENGTH, in.: 48

STACK DIAMETER, in.: 13.5
PITOT TUBE NO.: P-4-1
PITOT FACTOR: 0.816
METER Δ He: 1.890
D.G.M.C. FACTOR: 0.998
K FACTOR: —

TRAVERSE POINT NUMBER	SAMPLING TIME (θ), min.	STATIC PRESSURE (in.H2O)	STACK TEMP (Ts), °F	VELOCITY HEAD (ΔPs)	(√ΔPs)	PRESSURE DIFFERENTIAL ACROSS ORIFICE METER (ΔH) in., H2O ACTUAL	DESIRED	GAS SAMPLE VOLUME (Vm), ft3	GAS SAMPLE TEMPERATURE AT DRY GAS METER INLET (Tmin), °F	OUTLET (Tmout), °F	SAMPLE BOX TEMPERATURE °F	TEMPERATURE OF GAS LEAVING CONDENSER OR LAST IMPINGER F	PUMP VACUUM in. Hg gauge
1	1718	-.450	944	1.200	1.095	1.5	1.5	117.787	77	78	244	64	6.0
2			985	1.400	1.183								
3			1001	1.500	1.225								
4			1017	1.600	1.265								
5			1008	.805	.897								
6			1003	1.100	1.049								
7			990	1.150	1.072								
8			947	1.100	1.049								
9			960	1.200	1.095								
10			977	1.300	1.140								
11			991	1.400	1.183								
12			994	1.450	1.204								
13			998	1.100	1.049								
14			984	1.350	1.162								
15			979	1.550	1.245								
16	1750	-.450	968	1.650	1.285	1.5	1.5	139.218	88	76	251	56	6.0
AVERAGE	32	-.450	984.13		1.137	1.5		21.431	79.75				

VOLUME OF LIQUID WATER COLLECTED	IMPINGER WEIGHTS			
FINAL	611.0	565.8	477.6	631.4
INITIAL	536.5	552.3	476.1	625.9
WEIGHT COLLECTED	74.5	13.5	1.5	5.5
TOTAL WEIGHT				95.0

ORSAT MEASUREMENT

	CO2	O2	CO	N2
1	2.7	2.0	0.0	95.3
2				
3				
4				

COMMENTS: * WILL CHANGE SOLUTIONS IN ORSAT FOR NEXT RUN

PRE-LEAK CHECK GOOD @ 10" HG - .008 cf3/1.0 MIN
POST-LEAK CHECK GOOD @ 7" HG - .005 cf3/1.6 MIN

Emission Testing Services, Inc.
P.O. Box 15075
Baton Rouge, LA 70895
504-925-8405

Client : AMOCO
Source : ENGINE 84-01
Testing Date : 10-30-89
Run : 1

DETERMINATION OF STACK GAS MOISTURE CONTENT

Bws - Moisture fraction content
dH - Pressure differential across meter orifice, in H2O
Mw - Molecular weight of water, 18.0 lb/ lb mole
Pb - Barometric pressure at meter, in-Hg
Pst - Standard absolute pressure, 29.92 in-Hg
R - Ideal gas constant, 21.85 in-Hg ft3/ lb-mole deg R
Tm - Absolute temperature at meter, deg R
Tst - Standard absolute temperature, 528 deg R
Vm - Dry gas volume measured by meter, DCF
Vmstd- Dry gas volume at standard conditions, DSCF
Vw - Volume of water vapor collected, SCF
Wwc - Weight of water vapor collected, lb
Ilw, I2w, I3w, weight of water condensed by impingers, g
SGw, weight of water collected by silica gel, g
Y - Dry gas meter calibration factor

$$Wwc = (Ilw + I2w + I3w + SGw) / (453.6\ g/lb)$$

$$= (74.5 + 13.5 + 1.5 + 5.5) / (453.6) = .20944$$

$$Vw = \frac{Wwc\ R\ Tst}{Pst\ Mw} = \frac{(.20944)(21.85)(528)}{(29.92)(18.0)} = 4.48644$$

$$Vmstd = Vm\ Y \frac{(Pb + dH/13.6)}{Pst} \frac{Tst}{Tm}$$

$$= (21.431)(.9980) \frac{(29.980 + 1.5000/13.6)}{(29.92)} \frac{(528)}{(542.)}$$

$$= 20.94460$$

$$Bws = \frac{Vw}{Vw + Vmstd} = \frac{(4.48644)}{(4.48644 + 20.94460)} = .1764$$

Emission Testing Services, Inc.
P.O. Box 15075
Baton Rouge, LA 70895
504-925-8405

Client : AMOCO
Source : ENGINE 84-01
Testing Date : 10-30-89
Run : 1

DETERMINATION OF DRY MOLECULAR WEIGHT

Md - Dry molecular weight, lb/ lb-mole
%CO2 - Percent CO2 by volume (dry basis)
%O2 - Percent O2 by volume (dry basis)
%CO - Percent CO by volume (dry basis)
%N2 - Percent N2 by volume (dry basis)
0.280 - Molecular weight of N2 or CO, divided by 100
0.320 - Molecular weight of O2, divided by 100
0.440 - Molecular weight of CO2, divided by 100

$$Md = 0.440(\%CO2) + 0.320(\%O2) + 0.280(\%N2 + \%CO)$$

$$Md = 0.440(14.2) + 0.320(2.0) + 0.280(83.8 + .0)$$

$$= 30.352$$

Emission Testing Services, Inc.
P.O. Box 15075
Baton Rouge, LA 70895
504-925-8405

Client : AMOCO
Source : ENGINE 84-01
Testing Date : 10-30-89
Run : 1

DETERMINATION OF STACK GAS VELOCITY AND VOLUMETRIC FLOW RATE

A - Cross-sectional area of stack, ft2
Bws - Moisture fraction of stack gas
Cp - Pitot tube coefficient
dP - Avg., square root of velocity head, (in-H2O)**0.5
Kp - Pitot tube constant,
ft/sec (lb in-Hg/ lb-mole deg R in H2O)**0.5
Md - Molecular weight of stack gas, dry basis, lb/ lb-mole
Ms - Molecular weight of stack gas, wet basis, lb/ lb-mole
Pbar - Barometric pressure at measurement site, in-Hg
Pg - Static pressure of the stack gas, in H2O
Ps - Absolute stack gas pressure, in-Hg
Pstd - Standard absolute pressure, 29.92 in-Hg
Acf - Actual stack gas flow rate, ACF/min
Qsd - Dry volumetric stack gas flow rate
standard conditions, DSCF/Hr
Ts - Average stack gas temperature, deg R
Tstd - Standard absolute temperature, 528 deg R
Vs - Average stack gas velocity, ft/sec
3600 - Conversion factor, sec to Hr
18.0 - Molecular weight of water, lb/lb-mole

$$Ms = Md (1 - Bws) + 18.0 (Bws) =$$

$$= (30.352)(1 - .1764) + (18.0)(.1764) = 28.173$$

$$Vs = Kp\ Cp\ dP \left(\frac{Ts}{Ps\ Ms}\right)^{0.5} =$$

$$=(85.49)(.8160)(1.1018)\left(\frac{1444.}{[29.947][28.173]}\right)^{0.5} =100.5538$$

$$Acf = (60)(Vs)(A)= (60)(100.5538)(.9940) = 5997.0$$

$$Qsd = 3600 (1 - Bws) Vs A \frac{Tstd}{Ts} \frac{Ps}{Pstd} =$$

$$Qsd = 3600(1 - .1764)(100.5538)(.9940)\frac{(528)(29.947)}{(1444.)(29.92)}$$

$$= 108541.4 \text{ DSCFH}$$
$$= 1809.0 \text{ DSCFM}$$

CROSS SECTIONAL SCHEMATIC OF STACK TRAVERSE POINT LAYOUT

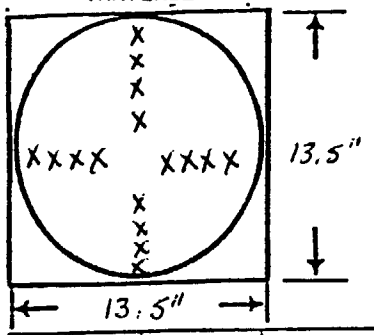

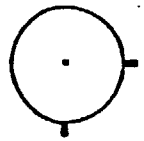

DRAW ARROW NORTH

E T S FIELD DATA, METHOD(S) 1-4

PLANT: AMOCO
DATE: 103089
LOCATION: DENHAM SPRINGS, LA
OPERATOR: J. ANGELLOZ
STACK NO.: 84-01
RUN NO.: 2

SAMPLE BOX NO.: MM
METER BOX NO.: 481
AMBIENT TEMPERATURE: 70°F
BAROMETRIC PRESSURE: 29.97
FILTER TARE wt mg: -
PROBE LENGTH, in.: 48"

STACK DIAMETER, in.: 13.5
PITOT TUBE NO.: P-4-1
PITOT FACTOR: 0.816
METER Δ He: 1.890
D.G.M.C. FACTOR: 0.998
K FACTOR: -

TRAVERSE POINT NUMBER	SAMPLING TIME (θ), min.	STATIC PRESSURE (in.H₂O)	STACK TEMP (Ts), °F	VELOCITY HEAD (ΔPs)	(√ΔPs)	PRESSURE DIFFERENTIAL ACROSS ORIFICE METER (ΔH) in., H₂O ACTUAL	DESIRED	GAS SAMPLE VOLUME (Vm), ft³	GAS SAMPLE TEMPERATURE AT DRY GAS METER INLET (Tmin), °F	OUTLET (Tmout), °F	SAMPLE BOX TEMPERATURE °F	TEMPERATURE OF GAS LEAVING CONDENSER OR LAST IMPINGER F	PUMP VACUUM in. Hg gauge
1	1856	-.460	948	1.100	1.049	1.5	1.5	139.405	71	72	266	60	4.0
2			957	1.200	1.095								
3			965	1.200	1.095								
4			970	1.300	1.140								
5			976	1.050	1.025								
6			984	1.350	1.162								
7			996	1.500	1.225								
8			999	1.550	1.245								
9			976	1.100	1.049								
10			988	1.200	1.095								
11			1001	1.550	1.245								
12			1007	1.600	1.265								
13			989	0.810	0.900								
14			983	0.985	0.992								
15			956	1.150	1.072								
16	1928	-.460	942	1.150	1.072	1.5	1.5	166.508	86	74	255	51	4.0
AVERAGE	32	-.460	977.31		1.108	1.5		21.103		75.75			

VOLUME OF LIQUID WATER COLLECTED	IMPINGER WEIGHTS			
FINAL	600.5	563.6	462.2	623.0
INITIAL	531.1	548.3	460.7	617.7
WEIGHT COLLECTED	69.4	15.3	1.5	5.3
TOTAL WEIGHT				91.5

ORSAT MEASUREMENT

	CO_2	O_2	CO	N_2
1	14.0	2.1	0.0	83.9
2				
3				
4				

COMMENTS:

PRE-LEAK CHECK GOOD @ 12" HG - .007 ft³/1.0 MIN
POST-LEAK CHECK GOOD @ 5" HG - .004 ft³/1.0 MIN

Emission Testing Services, Inc.
P.O. Box 15075
Baton Rouge, LA 70895
504-925-8405

Client : AMOCO
Source : ENGINE 84-01
Testing Date : 10-30-89
Run : 2

DETERMINATION OF STACK GAS MOISTURE CONTENT

Bws - Moisture fraction content
dH - Pressure differential across meter orifice, in H2O
Mw - Molecular weight of water, 18.0 lb/ lb mole
Pb - Barometric pressure at meter, in-Hg
Pst - Standard absolute pressure, 29.92 in-Hg
R - Ideal gas constant, 21.85 in-Hg ft3/ lb-mole deg R
Tm - Absolute temperature at meter, deg R
Tst - Standard absolute temperature, 528 deg R
Vm - Dry gas volume measured by meter, DCF
Vmstd- Dry gas volume at standard conditions, DSCF
Vw - Volume of water vapor collected, SCF
Wwc - Weight of water vapor collected, lb
I1w, I2w, I3w, weight of water condensed by impingers, g
SGw, weight of water collected by silica gel, g
Y - Dry gas meter calibration factor

$$Wwc = (I1w + I2w + I3w + SGw) / (453.6\ g/lb)$$

$$= (69.4 + 15.3 + 1.5 + 5.3) / (453.6) = .20172$$

$$Vw = \frac{Wwc\ R\ Tst}{Pst\ Mw} = \frac{(.20172)(21.85)(528)}{(29.92)(18.0)} = 4.32115$$

$$Vmstd = Vm\ Y \frac{(Pb + dH/13.6)}{Pst} \frac{Tst}{Tm}$$

$$= (21.103)(.9980) \frac{(29.970 + 1.5000/13.6)}{(29.92)} \frac{(528)}{(536.)}$$

$$= 20.86733$$

$$Bws = \frac{Vw}{Vw + Vmstd} = \frac{(4.32115)}{(4.32115 + 20.86733)} = .1716$$

Emission Testing Services, Inc.
P.O. Box 15075
Baton Rouge, LA 70895
504-925-8405

Client : AMOCO
Source : ENGINE 84-01
Testing Date : 10-30-89
Run : 2

DETERMINATION OF DRY MOLECULAR WEIGHT

Md - Dry molecular weight, lb/ lb-mole
%CO2 - Percent CO2 by volume (dry basis)
%O2 - Percent O2 by volume (dry basis)
%CO - Percent CO by volume (dry basis)
%N2 - Percent N2 by volume (dry basis)
0.280 - Molecular weight of N2 or CO, divided by 100
0.320 - Molecular weight of O2, divided by 100
0.440 - Molecular weight of CO2, divided by 100

$$Md = 0.440(\%CO2) + 0.320(\%O2) + 0.280(\%N2 + \%CO)$$

$$Md = 0.440(14.0) + 0.320(2.1) + 0.280(83.9 + .0)$$

$$= 30.324$$

Emission Testing Services, Inc.
P.O. Box 15075
Baton Rouge, LA 70895
504-925-8405

Client : AMOCO
Source : ENGINE 84-01
Testing Date : 10-30-89
Run : 2

DETERMINATION OF STACK GAS VELOCITY AND VOLUMETRIC FLOW RATE

A - Cross-sectional area of stack, ft2
Bws - Moisture fraction of stack gas
Cp - Pitot tube coefficient
dP - Avg., square root of velocity head, (in-H2O)**0.5
Kp - Pitot tube constant,
ft/sec (lb in-Hg/ lb-mole deg R in H2O)**0.5
Md - Molecular weight of stack gas, dry basis, lb/ lb-mole
Ms - Molecular weight of stack gas, wet basis, lb/ lb-mole
Pbar - Barometric pressure at measurement site, in-Hg
Pg - Static pressure of the stack gas, in H2O
Ps - Absolute stack gas pressure, in-Hg
Pstd - Standard absolute pressure, 29.92 in-Hg
Acf - Actual stack gas flow rate, ACF/min
Qsd - Dry volumetric stack gas flow rate
standard conditions, DSCF/Hr
Ts - Average stack gas temperature, deg R
Tstd - Standard absolute temperature, 528 deg R
Vs - Average stack gas velocity, ft/sec
3600 - Conversion factor, sec to Hr
18.0 - Molecular weight of water, lb/lb-mole

$$Ms = Md\ (1 - Bws) + 18.0\ (Bws) =$$

$$= (30.324)(1 - .1716) + (18.0)(.1716) = 28.210$$

$$Vs = Kp\ Cp\ dP \left(\frac{Ts}{Ps\ Ms}\right)^{0.5} =$$

$$= (85.49)(.8160)(1.1080)\left(\frac{1437.}{[29.936][28.210]}\right)^{0.5} = 100.8353$$

$$Acf = (60)(Vs)(A) = (60)(100.8353)(.9940) = 6013.9$$

$$Qsd = 3600\ (1 - Bws)\ Vs\ A \frac{Tstd}{Ts} \frac{Ps}{Pstd} =$$

$$Qsd = 3600(1 - .1716)(100.8353)(.9940)\frac{(528)(29.936)}{(1437.)(29.92)}$$

= 109873.3 DSCFH
= 1831.2 DSCFM

CROSS SECTIONAL SCHEMATIC OF STACK TRAVERSE POINT LAYOUT

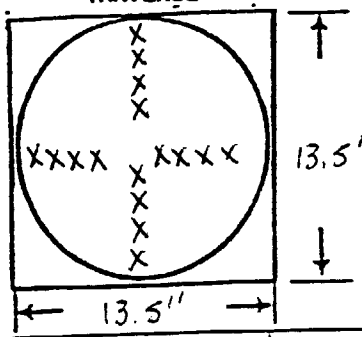

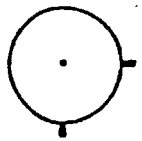

DRAW ARROW NORTH

E T S FIELD DATA, METHOD(S) 1-4

PLANT: AMOCO
DATE: 10 30 89
LOCATION: DENHAM SPRINGS
OPERATOR: J. ANGELLOZ
STACK NO.: 84-01
RUN NO.: 3

SAMPLE BOX NO.: KA
METER BOX NO.: 481
AMBIENT TEMPERATURE: 68°F
BAROMETRIC PRESSURE: 29.94
FILTER TARE wt mg: –
PROBE LENGTH, in.: 48

STACK DIAMETER, in.: 13.5
PITOT TUBE NO.: P-4-1
PITOT FACTOR: 0.816
METER Δ Hø: 1.890
D.G.M.C. FACTOR: 0.998
K FACTOR: –

TRAVERSE POINT NUMBER	SAMPLING TIME (θ), min.	STATIC PRESSURE (in.H₂O)	STACK TEMP (Ts), °F	VELOCITY HEAD (ΔPs)	√ΔPs	PRESSURE DIFFERENTIAL ACROSS ORIFICE METER (ΔH) in. H₂O ACTUAL	DESIRED	GAS SAMPLE VOLUME (Vm), ft³	GAS SAMPLE TEMPERATURE AT DRY GAS METER INLET (Tmin), °F	OUTLET (Tmout), °F	SAMPLE BOX TEMPERATURE °F	TEMPERATURE OF GAS LEAVING CONDENSER OR LAST IMPINGER F	PUMP VACUUM in. Hg gauge
1	2019	-0.420	956	1.350	1.162	1.5	1.5	160.725	71	71	245	56	4.0
2			988	1.450	1.204								
3			1011	1.550	1.245								
4			1021	1.550	1.245								
5			1020	0.870	0.933								
6			1010	1.100	1.049								
7			1001	1.200	1.095								
8			969	1.150	1.072								
9			970	1.050	1.025								
10			988	1.400	1.183								
11			991	1.550	1.245								
12			1018	1.600	1.265								
13			1022	0.835	0.914								
14			999	1.100	1.049								
15			971	1.200	1.095								
16	2051	-.420	943	1.200	1.095	1.5	1.5	182.243	87	75	261	48	4.0
AVERAGE	32	-.420	993.50		1.117	1.5		21.518	76.0				

VOLUME OF LIQUID WATER COLLECTED	IMPINGER WEIGHTS			
FINAL	692.5	573.9	478.5	636.6
INITIAL	611.0	565.8	477.6	631.4
WEIGHT COLLECTED	81.5	8.1	0.9	5.2
TOTAL WEIGHT				195.7

ORSAT MEASUREMENT

	CO_2	O_2	CO	N_2
1	14.4	1.8	0.0	83.8
2				
3				
4				

COMMENTS:

PRE-LEAK CHECK GOOD @ 10" HG – .006 ft³/1.0 min
POST-LEAK CHECK GOOD @ 5" HG – .003 ft³/1.0 min

Emission Testing Services, Inc.
P.O. Box 15075
Baton Rouge, LA 70895
504-925-8405

Client : AMOCO
Source : ENGINE 84-01
Testing Date : 10-30-89
Run : 3

DETERMINATION OF STACK GAS MOISTURE CONTENT

Bws - Moisture fraction content
dH - Pressure differential across meter orif ce, in H2O
Mw - Molecular weight of water, 18.0 lb/ lb mole
Pb - Barometric pressure at meter, in-Hg
Pst - Standard absolute pressure, 29.92 in-Hg
R - Ideal gas constant, 21.85 in-Hg ft3/ lb-mole deg R
Tm - Absolute temperature at meter, deg R
Tst - Standard absolute temperature, 528 deg R
Vm - Dry gas volume measured by meter, DCF
Vmstd- Dry gas volume at standard conditions, DSCF
Vw - Volume of water vapor collected, SCF
Wwc - Weight of water vapor collected, lb
I1w, I2w, I3w, weight of water condensed by impingers, g
SGw, weight of water collected by silica gel, g
Y - Dry gas meter calibration factor

$$Wwc = (I1w + I2w + I3w + SGw) / (453.6\ g/lb)$$

$$= (81.5 + 8.1 + .9 + 5.2) / (453.6) = .21098$$

$$Vw = \frac{Wwc\ R\ Tst}{Pst\ Mw} = \frac{(.21098)(21.85)(528)}{(29.92)(18.0)} = 4.51950$$

$$Vmstd = Vm\ Y \frac{(Pb + dH/13.6)}{Pst} \frac{Tst}{Tm}$$

$$= (21.518)(.9980) \frac{(29.940 + 1.5000/13.6)}{(29.92)} \frac{(528)}{(536.)}$$

$$= 21.24656$$

$$Bws = \frac{Vw}{Vw + Vmstd} = \frac{(4.51950)}{(4.51950 + 21.24656)} = .1754$$

Emission Testing Services, Inc.
P.O. Box 15075
Baton Rouge, LA 70895
504-925-8405

Client : AMOCO
Source : ENGINE 84-01
Testing Date : 10-30-89
Run : 3

DETERMINATION OF DRY MOLECULAR WEIGHT

Md - Dry molecular weight, lb/ lb-mole
%CO2 - Percent CO2 by volume (dry basis)
%O2 - Percent O2 by volume (dry basis)
%CO - Percent CO by volume (dry basis)
%N2 - Percent N2 by volume (dry basis)
0.280 - Molecular weight of N2 or CO, divided by 100
0.320 - Molecular weight of O2, divided by 100
0.440 - Molecular weight of CO2, divided by 100

$$Md = 0.440(\%CO2) + 0.320(\%O2) + 0.280(\%N2 + \%CO)$$

$$Md = 0.440(14.4) + 0.320(1.8) + 0.280(83.8 + .0)$$

$$= 30.376$$

Emission Testing Services, Inc.
P.O. Box 15075
Baton Rouge, LA 70895
504-925-8405

Client : AMOCO
Source : ENGINE 84-01
Testing Date : 10-30-89
Run : 3

DETERMINATION OF STACK GAS VELOCITY AND VOLUMETRIC FLOW RATE

A - Cross-sectional area of stack, ft2
Bws - Moisture fraction of stack gas
Cp - Pitot tube coefficient
dP - Avg., square root of velocity head, (in-H2O)**0.5
Kp - Pitot tube constant,
ft/sec (lb in-Hg/ lb-mole deg R in H2O)**0.5
Md - Molecular weight of stack gas, dry basis, lb/ lb-mole
Ms - Molecular weight of stack gas, wet basis, lb/ lb-mole
Pbar - Barometric pressure at measurement site, in-Hg
Pg - Static pressure of the stack gas, in H2O
Ps - Absolute stack gas pressure, in-Hg
Pstd - Standard absolute pressure, 29.92 in-Hg
Acf - Actual stack gas flow rate, ACF/min
Qsd - Dry volumetric stack gas flow rate
standard conditions, DSCF/Hr
Ts - Average stack gas temperature, deg R
Tstd - Standard absolute temperature, 528 deg R
Vs - Average stack gas velocity, ft/sec
3600 - Conversion factor, sec to Hr
18.0 - Molecular weight of water, lb/lb-mole

$$Ms = Md\ (1 - Bws) + 18.0\ (Bws) =$$

$$= (30.376)(1 - .1754) + (18.0)(.1754) = 28.205$$

$$Vs = Kp\ Cp\ dP \left(\frac{Ts}{Ps\ Ms}\right)^{0.5} =$$

$$= (85.49)(.8160)(1.1173)\left(\frac{1454.}{[29.909][28.205]}\right)^{0.5} = 102.3091$$

$$Acf = (60)(Vs)(A) = (60)(102.3091)(.9940) = 6101.8$$

$$Qsd = 3600\ (1 - Bws)\ Vs\ A\ \frac{Tstd}{Ts}\ \frac{Ps}{Pstd} =$$

$$Qsd = 3600(1 - .1754)(102.3091)(.9940)\frac{(528)(29.909)}{(1454.)(29.92)}$$

= 109625.8 DSCFH
= 1827.1 DSCFM

Emission Testing Services, Inc.
P.O. Box 15075
Baton Rouge, LA 70895
504-925-8405

Client : AMOCO
Source : ENGINE 84-01
Testing Date : 10-30-89
Run : 1-3

OXIDES OF NITROGEN EMISSION RATE

ENOX - Oxides of nitrogen emission rate as NO2, lb/Hr
F - NO2 Conv. factor, 1.1948 X 10-7 (lb/ft3)/(PPM)
NOXms - NOX concentration as measured, PPM
Qsd - Dry volumetric stack gas flow rate, DSCF/Hr

ENOX = (NOXms)(F)(Qsd)

-------- RUN 1 --------

ENOX = (661.46)(1.1948 X 10-7)(108541.4) = 8.578

-------- RUN 2 --------

ENOX = (645.24)(1.1948 X 10-7)(109873.3) = 8.470

---- --- RUN 3 --------

ENOX = (702.82)(1.1948 X 10-7)(109625.8) = 9.206

Emission Testing Services, Inc.
P.O. Box 15075
Baton Rouge, LA 70895
504-925-8405

Client : AMOCO
Source : ENGINE 84-01
Testing Date : 10-30-89
Run : 1-3

CARBON MONOXIDE EMISSION RATE

ECO - Carbon Monoxide Emission Rate - lb/hr
F - CO conv. factor, 7.2727 X 10-8 (lb/ft3)/(PPM)
COms - Concentration of carbon monoxide as measured - PPM
Qsd - Dry volumetric stack gas flow rate, DSCF/hr

ECO = (COms)(F)(Qsd)

-------- RUN 1 --------

ECO = (388.9)(7.2727 X 10-8)(108541.4) = 3.070

-------- RUN 2 --------

ECO = (412.1)(7.2727 X 10-8)(109873.3) = 3.293

-------- RUN 3 --------

ECO = (420.0)(7.2727 X 10-8)(109625.8) = 3.349

Test analyzer response, Method 3a, 7E & 10, was recorded by a computer data acquisition system. One minute average data were printed as recorded and served as a hardcopy record of the test data. Presented on the following pages are the computer print outs of the test data.

Each test analyzer is calibrated before and after each test run by challenging the analyzer with a set of certified calibration gases. Analyzer response is recorded by a computer data acquisition system. Calibration data sheets are manually completed as the calibrations are performed serving as hardcopy records of the calibration. Calibration results are taken from the computer system to avoid any data acquisition bias. Analyzer calibration data sheets are presented following the test data.

Run Title: AMOCO LOCKHART RUN 1 n=57

Date: 10/30/1989

Time	CO-VTS	NOX-VTS	O2-VTS	CO PPM	NOX PPM	O2 %
15:16:23	1.216	1.553	0.220	207.04	359.45	0.5212
15:17:23	1.504	2.037	0.220	[illegible]	472.79	0.5212
15:18:23	1.231	1.421	0.200	270.13	328.54	0.4684
15:19:23	4.830	3.667	0.220	1056.571	850.48	0.5212
15:20:23	1.275	3.072	0.205	247.56	715.51	0.4816
15:21:23	2.462	3.385	0.200	537.03	786.78	0.4684
15:22:23	1.358	4.625	0.176	297.23	1077.571	0.4025
15:23:23	1.360	4.039	0.151	276.47	942.10	0.3553
15:24:23	0.962	1.123	0.132	212.79	258.70	0.2838
15:25:23	1.566	1.304	0.078	342.18	301.66	0.1387
15:26:23	1.758	1.617	0.088	382.83	374.33	0.1650
15:27:23	2.083	1.778	0.103	451.77	412.11	0.2046
15:28:24	3.976	3.009	0.103	851.43	700.63	0.2046
15:29:24	1.802	1.353	0.093	391.22	312.51	0.1782
15:30:24	3.766	5.734	0.107	811.58	1337.486	0.2178
15:31:24	0.884	2.320	0.127	191.10	539.20	0.2706
15:32:24	1.094	2.193	0.127	240.90	509.43	0.2706
15:33:24	0.962	3.907	0.127	213.79	911.29	0.2706
15:34:24	1.387	1.284	0.107	303.58	296.48	0.2178
15:35:24	2.243	3.551	0.132	488.11	827.71	0.2574
15:36:24	0.694	4.103	0.112	198.19	957.08	0.2310
15:37:24	0.781	4.493	0.112	174.20	1048.671	0.2310
15:38:24	1.094	1.138	0.117	240.96	262.13	0.2442
15:39:24	3.004	1.089	0.107	648.14	250.69	0.2178
15:40:24	2.691	3.175	0.107	582.06	739.55	0.2178
15:41:24	1.919	4.166	0.058	417.26	971.97	0.1914
15:42:24	1.177	3.140	0.122	256.69	731.56	0.2574
15:43:24	1.035	1.328	0.107	226.19	306.76	0.2178
15:44:24	3.375	1.197	0.107	723.12	275.87	0.2178
15:45:24	3.658	1.162	0.122	788.63	267.36	0.2574
15:46:24	1.241	1.631	0.098	272.35	377.77	0.1914
15:47:24	3.473	5.905	0.112	746.49	1379.851	0.2310
15:48:24	1.466	2.135	0.112	317.20	493.40	0.2310
15:49:24	0.991	5.250	0.107	215.06	1216.151	0.2178
15:50:24	1.343	2.159	0.107	294.16	501.42	0.2178
15:51:24	1.109	4.440	0.103	245.09	1056.051	0.2046
15:52:24	0.991	4.684	0.112	215.06	1093.321	0.2310
15:53:25	0.616	4.601	0.098	141.96	1140.891	0.1914
15:54:25	0.772	1.280	0.107	172.11	295.34	0.2178
15:55:25	1.724	1.221	0.098	372.03	281.20	0.1914
15:56:25	2.505	1.187	0.083	541.51	273.58	0.1519
15:57:25	3.937	5.363	0.132	846.04	1252.908	0.2574
15:58:25	1.070	4.315	0.112	235.74	1000.318	0.2310
15:59:25	1.104	2.702	0.132	[illegible]	[illegible]	0.2574
16:00:25	0.962	1.485	0.083	212.17	345.42	0.1519
16:01:25	1.744	1.280	0.132	379.30	298.34	0.2574
16:02:25	2.775	4.967	0.250	600.65	1157.731	0.5476
16:03:25	0.915	1.569	0.493	[illegible]	[illegible]	1.2599
16:04:25	1.485	0.151	7.219	321.45	30.87	19.4242
16:05:25	0.933	0.049	7.546	205.33	8.62	20.3080
16:06:25	0.068	2.212	0.742	21.69	514.01	1.9327
16:07:25	0.845	2.593	0.371	[illegible]	603.21	0.9301
16:08:25	1.465	5.197	0.293	320.27	1213.51m	0.7191
16:09:25	3.282	1.269	0.783	702.30	297.65	0.6927
16:10:25	2.242	5.631	0.347	[illegible]	1315.930	0.8042
16:11:25	1.400	1.451	0.322	[illegible]	336.62	0.7982
16:12:25	1.587	5.605	0.070	[illegible]	1323.450	0.1387
16:13:25	0.653	1.934	0.083	[illegible]	[illegible]	0.1519
16:14:25	2.628	2.406	0.083	[illegible]	562.01	0.1519
16:15:25	1.064	[illegible]	0.083	[illegible]	278.10	0.1519

3N/A Probe Change

752

Run Title: AMOCO LOCKHART Run 2
Date: 10/30/1989

Time	CO-VTS	NOX-VTS	O2-VTS	CO PPM	NOX PPM	O2 %
18:42:45	2.530	5.441	0.076	5[illegible]	1150.7[illegible]	0.0494
18:43:45	1.353	5.470	0.225	[illegible]	[illegible]	0.4511
18:44:45	1.016	2.374	0.269	[illegible]	5[illegible].54	0.5716
18:45:45	2.403	6.090	0.181	52[illegible]	1288.47m	0.3306
18:46:45	0.874	1.607	0.166	19[illegible].19	337.96	0.2905
18:47:45	1.758	1.167	0.430	3[illegible]	244.80	1.0135
18:48:45	1.709	2.491	0.269	37[illegible]	525.39	0.5716
18:49:45	1.055	0.166	0.305	[illegible]	30.67	~~0.6654~~
18:50:45	1.074	0.098	0.347	~~237.23~~	~~18.05~~	~~0.7859~~
18:51:45	1.074	0.112	0.415	238.[illegible]	31.[illegible]	~~0.9732~~
18:52:45	1.079	0.049	0.486	~~249.25~~	~~7.67~~	~~1.1742~~
18:53:45	1.069	0.029	0.527	242.26	~~3.64~~	~~1.2813~~

Run Title: AMOCO LOCKHART Run 2 Cont'd
Date: 10/30/1989

Time	CO-VTS	NOX-VTS	O2-VTS	CO PPM	NOX PPM	O2 %
18:57:12	3.702	1.148	0.391	8[illegible].04	240.66	0.9064
18:58:12	3.530	2.[illegible]54	0.317	5[illegible]	453.95	0.7033
18:59:12	2.149	7.121	0.293	470.20	1906.94m	0.6386
19:00:12	1.538	1.133	0.264	336.77	237.35	0.5563
19:01:12	2.626	3.702	0.269	573.06	782.17	0.5716
19:02:12	0.860	1.197	0.285	[illegible]	251.01	0.6116
19:03:12	1.597	3.399	0.286	35[illegible].56	717.77	0.6252
19:04:12	0.996	1.104	0.269	[illegible]	231.34	0.5716
19:05:12	2.672	1.035	0.254	5[illegible].53	216.84	0.5315
19:06:12	2.076	2.183	0.269	434.45	460.16	0.5716
19:07:13	1.807	1.827	0.264	37[illegible].71	384.56	0.5583
19:08:13	2.120	1.407	0.259	463.90	295.53	0.5449
19:09:13	2.076	3.116	0.244	454.40	657.92	0.5047
19:10:13	3.769	3.639	0.234	[illegible]	768.71	0.4779
19:11:13	1.895	1.226	0.210	41[illegible].60	257.26	0.4110
19:12:13	4.953	6.960	0.244	1068.[illegible]	1472.77[illegible]	0.5047
19:13:13	1.983	1.221	0.274	434.50	256.16	0.5850
19:14:13	1.827	1.250	0.264	[illegible]	[illegible].46	0.5563
19:15:13	1.012	4.625	0.230	[illegible]	977.65	0.4645
19:16:13	1.011	1.114	0.220	[illegible]	[illegible].41	0.4377
19:17:13	1.895	1.717	0.259	[illegible]	464.25	0.5447
19:18:13	3.055	1.949	0.239	[illegible]	[illegible].46	0.4913
19:19:13	1.206	3.140	0.249	2[illegible].70	663.19	0.5181
19:20:13	2.022	3.548	0.230	44[illegible].90	1[illegible].5m	0.4645
19:21:13	1.773	3.731	0.181	[illegible]	788.30	0.3306
19:22:13	1.165	3.639	0.171	[illegible]	810.15	0.3036
19:23:13	1.126	1.109	0.171	[illegible]	[illegible].37	0.3036
19:24:13	1.495	3.707	0.150	[illegible]	[illegible]	0.2667
19:25:13	1.034	4.200	0.161	[illegible]	[illegible].70	0.2[illegible]
19:26:13	0.845	1.441	0.186	[illegible]	302.70	0.3440
19:27:13	1.250	2.574	0.205	[illegible]	[illegible]	0.3976
19:28:13	1.460	3.090	0.247	[illegible]	1[illegible]	0.5181
19:29:13	1.118	1.553	0.269	[illegible]	326.59	0.5716
19:30:14	1.016	3.447	0.298	[illegible]	1[illegible]m	0.6529
19:31:14	1.601	1.309	0.322	[illegible]	[illegible].83	0.7189
19:32:14	2.007	1.602	0.337	[illegible]	[illegible].40	0.7591
19:33:14	2.250	8.056	0.269	[illegible]	1[illegible].22m	0.5716
19:34:14	1.021	1.207	0.239	[illegible]	[illegible]	0.4913
19:35:14	3.756	8.403	0.244	[illegible]	1[illegible].74m	0.5047
19:36:14	1.871	1.346	0.364	[illegible]	[illegible]	0.8363
19:37:14	1.763	1.099	0.352	[illegible]	230.30	0.7457
19:38:14	2.164	4.493	0.352	[illegible]	948.90	0.7457
[illegible]	[illegible]	[illegible]	[illegible]	[illegible]	[illegible]	[illegible]

19:41:14	1.495	6.100	0.205	[illegible]	1290.540	0.3976
19:42:14	1.665	1.236	0.195	[illegible]	507.59	0.3705
19:43:14	3.204	6.730	0.190	[illegible]	1424.110	0.3574
19:44:14	2.691	1.651	0.220	[illegible]	547.20	0.4577
19:45:14	1.631	2.286	0.244	[illegible]	401.90	0.5047

408.99 634.57 .519

Run #3

Run Title: AMOCO LOCKHART
Date: 10/30/1989

Time	CO-VTS	NOX-VTS	O2-VTS	CO PPM	NOX PPM	O2 %
20:14:24	0.935	7.106	0.166	[illegible]	1475.458	0.2991
20:15:24	0.972	4.57[illegible]	0.137	[illegible]	961.60	0.2163
20:16:24	0.645	7.048	0.117	[illegible]	1481.078	0.1645
20:17:24	0.781	5.970	0.117	[illegible]	1[illegible].93	0.1645
20:18:24	1.617	1.187	0.112	[illegible]	240.75	0.1511
20:19:24	2.261	7.6[illegible]5	0.078	[illegible]	1[illegible]9.078	0.0569
20:20:24	0.845	4.425	0.078	15[illegible].45	930.37	0.0569
20:21:24	1.470	1.973	0.078	[illegible]	[illegible]	0.0569
20:22:24	1.597	2.623	0.083	3[illegible].74	549.90	0.0704
20:23:24	1.866	5.369	0.078	[illegible]	1320.75M	0.0569
20:24:24	1.988	1.109	0.078	4[illegible].63	230.25	0.0569
20:25:24	3.376	2.886	0.078	[illegible]	605.06	0.0569
20:26:24	1.328	5.002	0.078	[illegible]	1[illegible]8.078	0.0569
20:27:24	2.501	1.197	0.083	[illegible]	[illegible]46.03	0.0704
20:28:24	3.082	4.205	0.083	[illegible]	1[illegible]3.97	0.0704
20:29:24	1.143	5.21[illegible]	0.083	[illegible]	[illegible]	0.0704
20:30:24	1.719	1.499	0.083	37[illegible].5	31[illegible].74	0.0704

Run Title: AMOCO LOCKHART
Date: 10/30/1989

Time	CO-VTS	NOX-VTS	O2-VTS	CO PPM	NOX PPM	O2 %
20:33:51	1.104	1.421	0.083	210.[illegible]	296.24	0.0704
20:34:51	1.973	3.512	0.078	[illegible]	757.36	0.0569
20:35:51	1.226	5.402	0.078	271.24	1138.59M	0.0569
20:36:51	1.226	0.420	0.098	[illegible]	84.87	0.1107
20:37:51	1.226	0.308	0.161	271.24	51.15	0.2856
20:38:51	1.226	0.264	0.230	271.24	31.67	0.4739
20:39:51	1.226	0.086	0.286	271.24	14.75	0.6353
20:40:51	1.226	0.063	0.332	[illegible]	[illegible]	0.7964
20:41:51	1.226	0.093	0.366	271.24	15.79	0.8506
20:42:51	1.021	6.984	0.093	[illegible]	1470.67M	0.0973
20:43:51	2.828	1.158	0.093	[illegible]	240.57	0.0973
20:44:51	3.187	3.570	0.083	[illegible]	[illegible]	0.0704
20:45:51	1.353	1.343	0.078	294.31	279.75	0.0569
20:46:51	3.599	1.158	0.083	[illegible]	240.57	0.0704
20:47:51	2.628	2.862	0.078	5[illegible].17	600.42	0.0569
20:48:51	1.201	2.017	0.078	266.[illegible]	4[illegible].04	0.0569
20:49:51	3.036	9.275	0.083	6[illegible]	1[illegible]4.1[illegible]	0.0704
20:50:51	2.194	1.050	0.078	4[illegible]	217.86	0.0569
20:51:51	2.535	1.133	0.083	[illegible]	235.41	0.0704
20:52:51	2.759	1.[illegible]46	0.083	[illegible]	[illegible]	0.0704
20:53:51	4.972	6.160	0.078	[illegible]	1[illegible]4.04M	0.0569
20:54:52	1.939	1.021	0.083	[illegible]	211.69	0.0704
20:55:52	1.719	1.055	0.083	[illegible]	219.91	0.0704
20:56:52	2.05[illegible]	8.063	0.083	[illegible]	8[illegible]	0.0704
20:57:52	1.607	8.500	0.083	[illegible]	1772.3[illegible]	0.0704
20:58:52	1.700	6.325	0.083	[illegible]	1[illegible]1.47M	0.0704
20:59:52	1.026	5.885	0.083	[illegible]	1250.67M	0.0704
21:00:52	0.860	1.182	0.078	[illegible]	246.12	0.0569
21:01:52	1.739	2.676	0.078	36[illegible]	5[illegible].24	0.0569
21:02:52	1.529	2.564	0.078	[illegible]	541.65	0.0569
21:03:52	1.763	1.485	0.078	3[illegible].76	309.65	0.0569
21:04:52	3.298	7.069	0.078	[illegible]	1[illegible]5.82M	0.0569
21:05:52	0.877	2.574	0.078	[illegible]	537.56	0.0569
21:06:52	[illegible]	1.411	0.083	[illegible]	[illegible]	0.0704
21:07:52	3.701	1.466	0.088	[illegible]	304.47	0.0838
21:08:52	3.[illegible]	1.690	0.107	[illegible]	35[illegible].95	0.1376
21:09:52	[illegible]	[illegible]	0.060	[illegible]	[illegible]	0.0838
21:10:52	[illegible]	[illegible]	0.088	[illegible]	[illegible]	[illegible]
21:11:52	[illegible]	[illegible]	[illegible]	[illegible]	[illegible]	0.1645
[illegible]	[illegible]	[illegible]	[illegible]	[illegible]	[illegible]	0.0703

METHOD 7E DATA SHEET

COMPANY AMOCO SOURCE # 84-01 DATE 103089

PARAMETER NOx LOAD% MAX RUN NUMBER 1

CALIBRATION STATISTICS

Cylinder Value		Analyzer Response mv	Analyzer Response ppm	Absolute Difference mv	Absolute Difference ppm	% Drift ±2%
Zero	0	+0.02	.06	0.00	-4.63	-0.20
Mid	304.9	1.32	304.8	1.47	339.9	~~0.07~~ 1.5
High	895.5	3.84	895.5	4.23	986.9	3.91

Calibration curve: ppm = (response mv)(slope) + intercept

Slope 234.4141 Intercept -4.6251 Span Range 2339.5

COR = 1.00000

Analyzer Cal	Init. Analyzer Resp. mv	Init. Analyzer Resp. ppm	Bias ±5	Final Analyzer Resp. mv	Final Analyzer Resp. ppm	Bias ±5	Drift ±3
RUN #2 →	211.9959	-2.6589					
Conc. 895.5	3.84	895.5	0	4.14	965.8	3	3

Sys. Cal. Bias = $\frac{\text{Sys. cal. (ppm)} - \text{analyzer cal. (ppm)}}{\text{Span (ppm)}}$ X 100

%Drift = $\frac{\text{Final sys. resp. (ppm)} - \text{Initial sys. resp. (ppm)}}{\text{span (ppm)}}$ X 100

TEST DATA

Start time _____ Finish time _____ Minutes per point ____

Sample port _____

Test Point	mv				
1		11		21	
2		12		22	
3		13		23	
4		14		24	
5		15		25	
6		16		26	
7		17		27	
8		18		28	
9		19		29	
10		20		30	

Ave. mv ____

Ave. conc. _____ ppm

COMMENTS:

BIAS - 5.84 BIAS 11.12

ETS

METHOD 10 DATA SHEET

COMPANY AMOCO SOURCE # 84-01 DATE 103089

PARAMETER CO LOAD% MAX RUN NUMBER 1

CALIBRATION STATISTICS

	Cylinder Value	Initial Analyzer Response mv	Initial Analyzer Response ppm	Final Analyzer Response mv	Final Analyzer Response ppm	%Drift
Zero	0	0.06	20.1	0.06	20.1	0
Low	92.5	0.31	73.5	0.30	71.4	-0.1
Mid	401.6	1.81	393.9	1.79	389.6	-0.2
High	603	2.82	609.6	2.80	605.3	-0.2

Calibration curve: ppm = (response mv)(slope) + intercept

Slope 213.5906 Intercept 7.2867 Span Range 2143.2 cor = 0.998

$$\%Drift = \frac{\text{Final response (ppm)} - \text{Initial response (ppm)}}{\text{Span (ppm)}} \times 100$$

TEST DATA

Start time _____ Finish time _____ Minutes per point ____

Test Point mv Sample port _____

1		11		21	
2		12		22	
3		13		23	
4		14		24	
5		15		25	
6		16		26	
7		17		27	
8		18		28	
9		19		29	
10		20		30	

Ave. mv ____

Ave. conc. _____ ppm

COMMENTS:

METHOD 3A DATA SHEET

COMPANY AMOCO SOURCE # 84-01 DATE 103089

PARAMETER O_2 LOAD% MAX RUN NUMBER 1

CALIBRATION STATISTICS

Cylinder Value		Analyzer Response v	Analyzer Response %	Absolute Difference v	Absolute Difference %	% Span ±2%
Zero	0	0.08	0.14	0.08	0.14	0
Mid	13.08	4.72	12.7	4.772	12.8	0.4
High	19.33	7.28	19.6	7.15	19.2	-1.3

Calibration curve: ppm = (response v)(slope) + intercept

Slope 2.7009 Intercept -0.0724 Span Range 26.9

CoR = 0.9994

Analyzer Cal	Init. Analyzer Resp. v	ppm	Bias ±5	Final Analyzer Resp. v	ppm	Bias ±5	Span Drift ±3
Conc.							

$$\text{Sys. Cal. Bias} = \frac{\text{Sys. cal. (ppm)} - \text{analyzer cal. (ppm)}}{\text{Span (ppm)}} \times 100$$

$$\%\text{Drift} = \frac{\text{Final sys. resp. (ppm)} - \text{Initial sys. resp. (ppm)}}{\text{span (ppm)}} \times 100$$

TEST DATA

Start time _____ Finish time _____ Minutes per point ____

Test Point v Sample port _____

1		11		21	
2		12		22	
3		13		23	
4		14		24	
5		15		25	
6		16		26	
7		17		27	
8		18		28	
9		19		29	
10		20		30	

Ave. v _____

Ave. conc. _____ %

COMMENTS:

METHOD 7E DATA SHEET

COMPANY Amoco SOURCE # 84-01 DATE 103089

PARAMETER NOx LOAD% MAX RUN NUMBER 7

CALIBRATION STATISTICS

	Cylinder Value	Analyzer Response mv	Analyzer Response ppm	Absolute Difference mv	Absolute Difference ppm	% Drift ±2%
Zero	0	0.00	-2.6	0.00	-2.6	0
Mid	304.9	1.47	308.9	1.49	313.2	0.2
High	895.5	4.23	894.1	4.25	898.3	0.2

Calibration curve: ppm = (response mv)(slope) + intercept

Slope 211.9969 Intercept -2.6589 Span Range 2117.3

COR = 1.0000

Analyzer Cal	Init. Analyzer Resp. mv	Init. Analyzer Resp. ppm	Bias ±5	Final Analyzer Resp. mv	Final Analyzer Resp. ppm	Bias ±5	Drift ±3
Conc. 4.14	895.5	815.0	-1.0	4.13	812.9	-1.1	-0.10

$$\text{Sys. Cal. Bias} = \frac{\text{Sys. cal. (ppm)} - \text{analyzer cal. (ppm)}}{\text{Span (ppm)}} \times 100$$

$$\%\text{Drift} = \frac{\text{Final sys. resp. (ppm)} - \text{Initial sys. resp. (ppm)}}{\text{span (ppm)}} \times 100$$

TEST DATA

Start time _____ Finish time _____ Minutes per point ____

Test Point mv Sample port _____

Test Point	mv	Test Point	mv	Test Point	mv
1		11		21	
2		12		22	
3		13		23	
4		14		24	
5		15		25	
6		16		26	
7		17		27	
8		18		28	
9		19		29	
10		20		30	

Ave. mv ____

Ave. conc. _____ ppm

COMMENTS:

BIAS = 4.14 BIAS = 4.13

ETS

METHOD 10 DATA SHEET

COMPANY Amoco SOURCE # 84-01 DATE 103089

PARAMETER CO LOAD% MAX RUN NUMBER 2

CALIBRATION STATISTICS

	Cylinder Value	Initial Analyzer Response mv	Initial Analyzer Response ppm	Final Analyzer Response mv	Final Analyzer Response ppm	%Drift
Zero	0	0.06	21.2	0.05	19.0	-0.1
Low	92.5	0.30	72.8	0.31	74.9	0.1
Mid	401.6	1.79	393.0	1.80	395.2	0.1
High	603	2.80	610.1	2.80	610.1	0

Calibration curve: ppm = (response mv)(slope) + intercept

Slope 214.9514 Intercept 8.2726 Span Range 2157.8

COR = 0.998

$$\%Drift = \frac{\text{Final response (ppm)} - \text{Initial response (ppm)}}{\text{Span (ppm)}} \times 100$$

TEST DATA

Start time _____ Finish time _____ Minutes per point ____

Test Point mv

Sample port _____

1	____	11	____	21	____
2	____	12	____	22	____
3	____	13	____	23	____
4	____	14	____	24	____
5	____	15	____	25	____
6	____	16	____	26	____
7	____	17	____	27	____
8	____	18	____	28	____
9	____	19	____	29	____
10	____	20	____	30	____

Ave. mv ____

Ave. conc. _____ ppm

COMMENTS:

METHOD 3A DATA SHEET

COMPANY AMOCO SOURCE # 84-01 DATE 103089

PARAMETER O_2 LOAD% MAX RUN NUMBER 2

CALIBRATION STATISTICS

Cylinder Value		Analyzer Response v	Analyzer Response %	Absolute Difference v	Absolute Difference %	% Span ±2%
Zero	0	0.08	0.05	0.08	0.05	0
Mid	13.08	4.772	12.9	4.74	12.8	-0.3
High	19.33	7.15	19.4	7.12	19.4	0

Calibration curve: ppm = (response v)(slope) + intercept

Slope 2.7416 Intercept -0.1640 Span Range 27.3

COR = 0.9999

Analyzer Cal	Init. Analyzer Resp. v	ppm	Bias ±5	Final Analyzer Resp. v	ppm	Bias ±5	Span Drift ±3
Conc.							

Sys. Cal. Bias = $\frac{\text{Sys. cal. (ppm)} - \text{analyzer cal. (ppm)}}{\text{Span (ppm)}} \times 100$

%Drift = $\frac{\text{Final sys. resp. (ppm)} - \text{Initial sys. resp. (ppm)}}{\text{span (ppm)}} \times 100$

TEST DATA

Start time _____ Finish time _____ Minutes per point _____

Test Point v Sample port _____

1		11		21	
2		12		22	
3		13		23	
4		14		24	
5		15		25	
6		16		26	
7		17		27	
8		18		28	
9		19		29	
10		20		30	

Ave. v _____

Ave. conc. _____ %

COMMENTS:

METHOD 7E DATA SHEET

COMPANY Amoco SOURCE # 84-01 DATE 103089

PARAMETER NOx LOAD% MAX RUN NUMBER 3

CALIBRATION STATISTICS

Cylinder Value		Analyzer Response mv	ppm	Absolute Difference mv	ppm	% Drift ±2%
Zero	0	0.00	-3.8	0.00	-3.8	0
Mid	304.9	1.49	310.8	1.49	310.8	0
High	895.5	4.25	893.4	4.27	897.7	0.2

Calibration curve: ppm = (response mv)(slope) + intercept

Slope 211.1179 Intercept -3.8056 Span Range 2107.4

COR = 0.99994

Analyzer Cal	Init. Analyzer Resp. mv	ppm	Bias ±5	Final Analyzer Resp. mv	ppm	Bias ±5	Drift ±3
Conc. 895.5	4.13	868.1	-1.3	4.36	916.7	1.0	2.3

Sys. Cal. Bias = $\frac{\text{Sys. cal. (ppm)} - \text{analyzer cal. (ppm)}}{\text{Span (ppm)}} \times 100$

%Drift = $\frac{\text{Final sys. resp. (ppm)} - \text{Initial sys. resp. (ppm)}}{\text{span (ppm)}} \times 100$

TEST DATA

Start time _____ Finish time _____ Minutes per point ____

Test Point mv Sample port _____

1	____	11	____	21	____
2	____	12	____	22	____
3	____	13	____	23	____
4	____	14	____	24	____
5	____	15	____	25	____
6	____	16	____	26	____
7	____	17	____	27	____
8	____	18	____	28	____
9	____	19	____	29	____
10	____	20	____	30	____

Ave. mv ____

Ave. conc. _____ ppm

COMMENTS:

BIAS = 4.13

Bias 4.36

ETS

METHOD 10 DATA SHEET

COMPANY AMOCO SOURCE # 84-01 DATE 103089

PARAMETER CO LOAD% MAX RUN NUMBER 3

CALIBRATION STATISTICS

	Cylinder Value	Initial Analyzer Response mv	Initial Analyzer Response ppm	Final Analyzer Response mv	Final Analyzer Response ppm	%Drift
Zero	0	0.05	18.8	0.06	20.9	0.1
Low	92.5	0.31	74.6	0.30	72.5	-0.1
Mid	401.6	1.80	~~1.80~~ 394.5	1.81	396.7	0.1
High	603	2.80	609.2	2.82	613.5	0.2

Calibration curve: ppm = (response mv)(slope) + intercept

Slope 214.6993 Intercept 8.0479 Span Range 2155.0

COR = 0.998

%Drift = $\frac{\text{Final response (ppm)} - \text{Initial response (ppm)}}{\text{Span (ppm)}} \times 100$

TEST DATA

Start time _____ Finish time _____ Minutes per point ____

Sample port _____

Test Point	mv				
1	____	11	____	21	____
2	____	12	____	22	____
3	____	13	____	23	____
4	____	14	____	24	____
5	____	15	____	25	____
6	____	16	____	26	____
7	____	17	____	27	____
8	____	18	____	28	____
9	____	19	____	29	____
10	____	20	____	30	____

Ave. mv ____

Ave. conc. _____ ppm

COMMENTS:

METHOD 3A DATA SHEET

COMPANY Amoco SOURCE # 84-01 DATE 103089

PARAMETER O_2 LOAD% MAX RUN NUMBER 3

CALIBRATION STATISTICS

Cylinder Value		Analyzer Response v	Analyzer Response %	Absolute Difference v	Absolute Difference %	% Span ±2%
Zero	0	0.08	0.06	0.08	0.06	0
Mid	13.08	4.74	12.9	4.84	13.2	1.0
High	19.33	7.12	19.5	7.12	19.5	0

Calibration curve: ppm = (response v)(slope) + intercept

Slope 2.7542 Intercept -0.1583 Span Range 27.4 COR = 0.9999

Analyzer Cal	Init. Analyzer Resp. v	ppm	Bias ±5	Final Analyzer Resp. v	ppm	Bias ±5	Span Drift ±3
Conc.							

Sys. Cal. Bias = $\frac{\text{Sys. cal. (ppm)} - \text{analyzer cal. (ppm)}}{\text{Span (ppm)}} \times 100$

%Drift = $\frac{\text{Final sys. resp. (ppm)} - \text{Initial sys. resp. (ppm)}}{\text{span (ppm)}} \times 100$

TEST DATA

Start time _____ Finish time _____ Minutes per point _____

Test Point v Sample port _____

1		11		21	
2		12		22	
3		13		23	
4		14		24	
5		15		25	
6		16		26	
7		17		27	
8		18		28	
9		19		29	
10		20		30	

Ave. v _____

Ave. conc. _____ %

COMMENTS:

Following are engine operating data collected during emission testing.

EMISSION TESTING SERVICES, INC.

INTERNAL COMBUSTION ENGINE OPERATIONAL RECORD

Company Name Amoco Prod. Co.

Company Location Lockhart Crossing C.F. Denham Springs, La.

Engine Name Waukesha P9390

Engine Source I. D. No. 84-1

Design Specifications

Manufacturer's Name Waukesha

Model No. P9390 Serial No. _____

Parameter Specifications

A. Fuel Type Natural Gas B. Fuel Supplier AMOCO

C. Fuel Flow Units SCF Meas. Method orfice meter

D. Is unit equipped for waste heat recovery? NO

Describe _____

E. Does unit use water or steam injection? NO

If so, describe measurement method (continuous flow, start-finish volumes, etc) _____

F. Manifold Pressure units (psia, kpa, etc.) 25 Psig

G. Manifold Temp. (°F, °C, etc.) 75°F

Ultimate Fuel Analysis; BTU

C _____ S _____ H _____ ~~Ash~~ _____

O _____ H_2O _____ N _____

Trace Metals: Na — Va — K —

Fuel elements added —

Fuel elements added for smoke suppression —

EMISSION TESTING SERVICES, INC.

INTERNAL COMBUSTION ENGINE

TEST RUN LOG

(GAS ENGINES)

Company Amoco Prod. Co.

Engine Waukesha P9390

Operator Michael Cormier

Date: 10-30-89 Test Time: Start 1710 End 1810

Ambient Temperature, at time of test 78°

Engine Load Condition %

DATA LOG TIME (15 minute intervals)	1725	1740	1755	1810
Fuel Feed (flow)				
Intake Manifold Temp.	75°	75°	75°	75°
Intake Manifold Pressure	+1	+1	+1	+1
Fuel Header Pressure	25	25	25	25
Engine Speed (rpm)	905	909	907	903
Spark Ignition Timing	20°	20°	20°	20°
Horse Power	1200	1200	1200	1200

Run Conditions: Mod.

Remarks:

EMISSION TESTING SERVICES, INC.

INTERNAL COMBUSTION ENGINE

TEST RUN LOG

(GAS ENGINES)

Company AMOCO Prod. Co.

Engine Waukesha P9390

Operator ~~Atto~~ Michael Cormier

Date: 10-30-89 Test Time: Start 1843 End 1943

Ambient Temperature, at time of test 75°

Engine Load Condition %

DATA LOG TIME (15 minute intervals)	1858	1913	1928	1943
Fuel Feed (flow)				
Intake Manifold Temp.	74°	74°	73°	73°
Intake Manifold Pressure	+1	+1	+1	+1
Fuel Header Pressure	25	25	25	25
Engine Speed (rpm)	907	905	898	905
Spark Ignition Timing	20°	20°	20°	20°
Horse Power	1200	1200	1200	1200

Run Conditions: Max.

Remarks:

EMISSION TESTING SERVICES, INC.

INTERNAL COMBUSTION ENGINE

TEST RUN LOG

(GAS ENGINES)

Company Amoco Prod. Co.

Engine [redacted] P9390

Operator Michael Cassidy

Date: 10-30-89 Test Time: Start 2014 End 2114

Ambient Temperature, at time of test 72°

Engine Load Condition %

DATA LOG TIME (15 minute intervals)	2029	2044	2059	2114
Fuel Feed (flow)				
Intake Manifold Temp.	73°	72°	71°	71°
Intake Manifold Pressure	+1	+1	+1	+1
Fuel Header Pressure	25	25	25	25
Engine Speed (rpm)	909	915	890	893
Spark Ignition Timing	20°	20°	20°	20°
Horse Power	1200	1200	1200	1200

Run Conditions: Max

Remarks:

PUBLIC NOTICE

REQUEST FOR PUBLIC COMMENT ON FACILITY MODIFICATION OIL AND GAS PRODUCTION FACILITY AMOCO PRODUCTION COMPANY DENHAM SPRINGS, LIVINGSTON PARISH, LOUISIANA

Amoco Production Company, Post Office Box 90879, New Orleans, Louisiana 70150, has requested authority to modify the operation of Wilcox Production Facility CF #3 at Lockhart Crossing Field near Denham Springs, Livingston Parish. A permit application was submitted to the Air Quality Division on March 4, 1988.

Amoco proposed to bring under permit a 400 HP rental compressor and to retrofit and existing 1500 HP compressor with a catalytic converter to reduce NOx emissions at the site. Emissions of pollutants at the facility in tons per year are estimated as follows:

Pollutant	Estimated Emissions
Particulate	6.41
SO2	0.12
NOx	246.46
HC	68.28
CO	40.10

Dispersion modeling predicts a maximum annual ground level NOx concentration of 65.43 ug/m3, which is below the National Ambient Air Quality Standards of 100 ug/m3.

A copy of all the material submitted by the applicant and the proposed draft permit are available for inspection and review at the Office of Air Quality and Nuclear Energy, Air Quality Division, State Land and Natural Resources Building (8th floor), 625 North Fourth Street, Baton Rouge, Louisiana.

Written comments on the proposed project may be submitted to Mr. Harendra Raol, Air Permits Program Manager, Air Quality Division, P. O. Box 44096, Baton Rouge, Louisiana 70804.

ST-54296-nov 1-1t

CAPITAL CITY PRESS

Publisher of

STATE-TIMES

PROOF OF PUBLICATION

The hereto attached notice was published in the STATE-TIMES, a daily newspaper of general circulation, published in Baton Rouge, Louisiana, and the Official Journal of the State of Louisiana, the City of Baton Rouge and the Parish of East Baton Rouge, in the issues of:

November 1, 1988

Advertising Representative

Sworn and subscribed before me by the person whose signature appears above in Baton Rouge, La.

on this 1 day of November 19 88 AD.

Notary Public

My Commission Expires: Indefinite

54296
A89-436

VII. **APPENDIX**

Contained in this section is a copy of the permit, dry gas meter calibration, pitot tube calibration, gas standard certifications and resumes of Emission Testing Services persons performing the testing. Also contained at the end of this section are excerpts from the operating manuals for each of the continuous analyzers used. The excerpts describe the principle operation of the instrument, analytical technique, performance characteristics, etc..

State of Louisiana

DEPARTMENT OF ENVIRONMENTAL QUALITY

BUDDY ROEMER
GOVERNOR

PAUL H. TEMPLET, Ph.D.
SECRETARY

December 1, 1988

Mr. G. R. Blankenship
Division Operations Manager
Amoco Production Company
Post Office Box 50879
New Orleans, Louisiana 70150

Dear Mr. Blankenship:

RE: Permit request for Wilcox Production Facility CF#3 Oil and Gas Production Facility at Lockhart Crossing Field near Denham Springs, Livingston Parish, Louisiana.

This is to inform you that the permit request for the above referenced project has been approved under LAC 33:III.505. The submittal was approved on the basis of the emissions reported and the approval in no way guarantees the design scheme presented will be capable of controlling the emissions to the types and quantities stated. A new application must be submitted if the reported emissions are exceeded after operation begins. The synopsis, data sheets and conditions are attached herewith.

It will be considered a violation of the permit if all proposed control measures and/or equipment are not installed and properly operated and maintained as specified in the application.

The permit number cited below should be referenced in future correspondence regarding this subject.

Done this 6th day of December, 1988.

Permit No.: ~~1740-00016-00~~
1740-00024-00
per letter dated 12/21/88 attached

Very truly yours,

Mike D. McDaniel

Mike D. McDaniel, Ph.D.
Assistant Secretary

MMcD/ATT/bpw
cc: Capital Regional Office

State of Louisiana

Department of Environmental Quality

BUDDY ROEMER
Governor

PAUL TEMPLET
Secretary

December 21, 1988

Lockhart Crossing CF#3

Mr. G. R. Blankenship
Division Operations Manager
Amoco Production Company
Post Office Box 50879
New Orleans, Louisiana 70150

Dear Mr. Blankenship:

There has been a change in the permit no. (1740-00016-00) issued to Amoco Production Company on December 6, 1988. Permit no. 1740-00016-00 should be 1740-00024-00. Please attach this to your permit for future reference.

Very truly yours,

HARaol

Harendra A. Raol
Permits Program Manager

HAR/bpw

cc: Capital Regional Office

DEPARTMENT OF ENVIRONMENTAL QUALITY
AIR QUALITY DIVISION
BRIEFING SHEET

AMOCO PRODUCTION COMPANY
WILCOX PRODUCTION FACILITY CF#3
DENHAM SPRINGS, LIVINGSTON PARISH, LOUISIANA

I. BACKGROUND:

Amoco Production Company proposes to permit an existing oil and natural gas production facility it purchased in 1985 at Lockhart Crossing Field in Livingston Parish. Known as Wilcox Production Facility CF#3, the facility was originally constructed and operated by Callon Petroleum, but it was never permitted. Amoco applied for a permit in December, 1985. Deficiencies in the application and confusion over its status resulted in delays. In response to inspection reports and a conference in December, 1987, Amoco submitted an updated application. This review is for a new permit for the entire facility.

II. ORIGIN:

An Application for Approval of Emissions and an Emission Inventory Questionnaire dated March 4, 1988 initiated this review.

III. DESCRIPTION:

Amoco Production Company operates an oil field central tank battery in Livingston Parish. The facility consists of separators, heater treaters, glycol unit and regenerator, fixed roof tanks and vapor recovery unit, and pipeline and truck loading equipment. Crude oil is shipped off-site by pipeline and truck. Gas is compressed and shipped off-site by pipeline. A portion of the produced gas and all of the produced salt water is reinjected by electrically driven pumps into the reservoir to enhance recovery.

Operating rates during 1984 would have qualified the facility as a major source of NO_x emissions. However, Amoco has retrofitted one large compressor with a catalytic converter and proposes to operate compressors at 80% rated capacity to further reduce NO_x emissions. Under these conditions, the source falls into the minor source category. The facility shall undergo stack testing to verify operation within permitted limits and corresponding production rates.

Emissions for the entire facility in tons per year are estimated to be as follows:

Pollutant	Permitted Emissions
Particulate	0.41
SO_2	0.12
NO_x	246.46
HC	68.28
CO	40.10

DEPARTMENT OF ENVIRONMENTAL QUALITY
AIR QUALITY DIVISION
BRIEFING SHEET

AMOCO PRODUCTION COMPANY
WILCOX PRODUCTION FACILITY CF#3
DENHAM SPRINGS, LIVINGSTON PARISH, LOUISIANA
(CONTINUED)

Dispersion modeling predicts an annual NO_x concentration of 65.43 ug/m^3, which is below the National Ambient Air Quality Standards of 100 ug/m^3.

VI. TYPE OF REVIEW:

The project is reviewed for compliance with State regulations. PSD, NSPS and LESHAP do not apply.

V. PUBLIC NOTICE:

Request for public comment on the project was published November 1, 1988 in the State-Times, Baton Rouge, East Baton Rouge Parish, Louisiana.

SPECIFIC CONDITIONS

AMOCO PRODUCTION COMPANY
WILCOX PRODUCTION FACILITY CF#3
DENHAM SPRINGS, LIVINGSTON PARISH, LOUISIANA

1. Compliance with permitted emission limits shall be demonstrated by stack test for Sources 83-1 and 84-1 operating at 80% capacity, according to 40 CFR 60 New Source Performance Standards, Appendix A - Reference Methods for Source Emissions, Methods 1, 2, 3A, 4, 7E and 10.

2. During testing, engine operating parameters shall be established to indicate performance within emission limits. Permittee shall maintain available for inspection of site for two years records of engine operating parameters. These parameters shall include engine speed, timing, fuel usage and hours of operation.

3. Permittee shall maintain the catalytic converter in the manner prescribed by the manufacturer to ensure proper functioning of the emission control equipment. A record of temperatures upstream and downstream of the converter and a record of engine lube oil usage shall be included in the records required by Specific Condition 2. A sample of the catalyst shall be checked at least annually to ensure fouling is not excessive.

4. Emissions in pounds per hour shall not exceed the following:

Source 83-1	-	NO_x	31.75	CO	2.47
Source 84-1	-	NO_x	9.53	CO	5.30

LOUISIANA AIR EMISSION PERMIT
GENERAL CONDITIONS

I. This permit is issued on the basis of the emissions reported in the application for approval of emissions and in no way guarantees that the design scheme presented will be capable of controlling the emissions to the type and quantities stated. Failure to install, properly operate and/or maintain all proposed control measures and/or equipment as specified in the application and supplemental information shall be considered a violation of the permit and LAC 33:III.505. If the emissions are determined to be greater than those allowed by the permit or if proposed control measures and/or equipment are not installed or do not perform according to design efficiency, an application to modify the permit must be submitted.

II. The permittee is subject to all applicable provisions of the Louisiana Air Quality Regulations. Violation of the terms and conditions of the permit constitutes a violation of these regulations.

III. The permit application and the attached data sheets establish the emission and operating limitations and are a part of the permit. The synopsis and data sheets are based on the application and Emissions Inventory Questionnaire submitted on March 4, 1988.

IV. This permit shall become invalid, for the sources not constructed, if:

(a) construction is not commenced, or binding agreements or contractural obligations to undertake a program of construction of the project are not entered into, within two (2) years (18 months for PSD permits) after issuance of this permit, or;

(b) if construction is discontinued for a period of two (2) years (18 months for PSD permits) or more.

The administrative authority may extend this time period upon a satisfactory showing that an extension is justified.

This provision does not apply to the time period between construction of the approved phases of a phased construction project. However, each phase must commence construction within two (2) years (18 months for PSD permits) of its projected and approved commencement date.

V. The permittee shall submit semi-annual reports of progress outlining the status of construction, noting any design changes, modifications or alterations in the construction schedule which have or may have an effect on the emission rates or ambient air quality levels. These reports shall continue to be submitted until such time as construction is certified as being complete. Furthermore, for any significant change in the design, prior approval shall be obtained from the Louisiana Air Quality Division.

LOUISIANA AIR EMISSION PERMIT
GENERAL CONDITIONS

VI. The permittee shall notify the Department of Environmental Quality, Air Quality Division within ten (10) calendar days from the date that construction is certified as complete and the estimated date of start-up of operation. The appropriate Regional Office shall also be so notified within the same time frame.

VII. Any emissions testing performed for purposes of demonstrating compliance with the limitations set forth in paragraph III shall be conducted in accordance with the methods described in the Division's test manual or any other methods approved by the U.S. EPA. Any deviation from or modification of the methods used for testing shall have prior approval from the Louisiana Air Quality Division.

VIII. The emission testing described in paragraph VII above, or established in the specific conditions of this permit, shall be conducted within sixty (60) days after achieving normal production rate, but in no event later than 180 days after initial start-up (or restart-up after modification). The Air Quality Division Surveillance Section shall be notified at least thirty (30) days prior to testing and shall be given the opportunity to conduct a pretest meeting and observe the emission testing. The test results shall be submitted to the Air Quality Division within forty-five (45) days after the complete testing. As required by LAC 33:III.913, the permittee shall provide necessary sampling ports in stacks or ducts and such other safe and proper sampling and testing facilities for proper determination of the emission limits.

IX. The permittee shall, within 180 days after start-up of each project or unit, report to the Louisiana Air Quality Division any significant difference in operating emission rates as compared to those limitations specified in paragraph III. This report shall also include, but not be limited to, malfunctions and upsets.

X. The permittee shall retain records of all information resulting from monitoring activities and information indicating operating parameters as specified in the specific conditions of this permit for a minimum of at least two (2) years.

XI. If for any reason the permittee does not comply with, or will not be able to comply with, the emission limitations specified in this permit, the permittee shall provide the Air Quality Division with the following information in writing within five (5) days of such conditions:

a. Description of noncomplying emission(s);
b. Cause of noncompliance;
c. Anticipated time the noncompliance is expected to continue, or, if corrected, the duration of the period of noncompliance;
d. Steps taken by the permittee to reduce and eliminate the noncomplying emissions; and
e. Steps taken by the permittee to prevent recurrences of the noncomplying emissions.

LOUISIANA AIR EMISSION PERMIT
GENERAL CONDITIONS

XII. Permittee shall allow the authorized officers and employees of the Department of Environmental Quality, at all reasonable times and upon presentation of identification, to:

1) Enter upon the permittee's premises where regulated facilities are located, regulated activities are conducted or where records required under this permit are kept;

2) Have access to and copy any records that are required to be kept under the terms and conditions of this permit, the Louisiana Air Quality Regulations, or the Act;

3) Inspect any facilities, equipment (including monitoring methods and an operation and maintenance inspection), or operations regulated under this permit; and,

4) Sample or monitor, for the purpose of assuring compliance with this permit or as otherwise authorized by the Act or regulations adopted thereunder, any substances or parameters at any location.

XIII. If samples are taken under Section XII. 4) above, the officer or employee obtaining such samples shall give the owner, operator or agent in charge a receipt describing the sample obtained. If requested prior to leaving the premises, a portion of each sample equal in volume or weight to the portion retained shall be given to the owner, operator or agent in charge. If an analysis is made of such samples, a copy of the analysis shall be furnished promptly to the owner, operator or agent in charge.

XIV. The permittee shall allow authorized officers and employees of the Department of Environmental Quality, upon presentation of identification, to enter upon the permittee's premises to investigate potential or alleged violations of the Act or the rules and regulations adopted thereunder. In such investigations, the permittee shall be notified at the time entrance is requested of the nature of the suspected violation. Inspections under this subsection shall be limited to the aspects of alleged violations. However, this shall not in any way preclude prosecution of all violations found.

XV. The permittee shall comply with the reporting requirements specified under LAC 33:III.918 as well as notification requirements specified under LAC 33:III.927.

XVI. In the event of any change in ownership of the source described in this permit, the permittee and the succeeding owner shall notify the Louisiana Air Quality Division, within ninety (90) days after the event, to amend this permit.

AIR QUALITY DATA SHEET
PAGE 1

AMOCO PRODUCTION COMPANY
WILCOX PRODUCTION FACILITY CF#3
DENHAM SPRINGS, LIVINGSTON PARISH, LOUISIANA

Location of plant: 15 UTM: 699.7 Km E 3378.7 Km N

Description of location: 1.5 miles northeast of Denham Springs on Horseshoe Road; ½ mile west of Mt. Olive Church, Lockhart Crossing Field.

Estimated starting date of construction: Operating

Estimated date operation will begin: _____

Type of Dispersion Calculations Used: Long term ISC, 1 year meteorological (STAR) data.

EFFECTS ON AMBIENT AIR

Pollutant	Time Period	Calculated Maximum Ground Level Concentration	Louisiana Air Quality Standard
NO_x	Annual	65.43 ug/m^3	NAAQS 100 ug/m^3

NEW X OR MODIFIED ____ EMISSION SOURCES Oil and Gas Production (Type of Source)

Stack I.D.#	Description	Operating Rate (Maximum)	Operating Schedule Hrs/Day	Days/Wk	Wks/Yr
83-1	1,000 HP Compressor	800 HP	24	7	52
83-2	10,000 BBL Crude Oil Tank	5,000 BPD	24	7	52
83-3	5,000 BBL Crude Oil Tank	1,000 BPD	24	7	52
83-4	1,000 BBL Salt Water Tank	300 BPD	24	7	52
83-5	500 BBL Salt Water Tank	300 BPD	24	7	52
83-6	400 BBL Salt Water Tank	300 BPD	24	7	52
83-7	400 BBL Salt Water Tank	300 BPD	24	7	52

AIR QUALITY DATA SHEET
PAGE 1 (CONTINUED)

AMOCO PRODUCTION COMPANY
WILCOX PRODUCTION FACILITY CF#3
DENHAM SPRINGS, LIVINGSTON PARISH, LOUISIANA

Stack I.D.#	Description	Operating Rate (Maximum)	Operating Schedule Hrs/Day	Days/Wk	Wks/Yr
83-8	210 BBL Salt Water Tank	300 BPD	24	7	52
83-9	Heater Treater #1 (Stack #1)	1.5 MM BTU/Hr	24	7	52
83-10	Heater Treater #1 (Stack #2)	1.5 MM BTU/Hr	24	7	52
83-11	Glycol Regenerator	375 M BTU/Hr	24	7	52
83-12	Truck Loading Rack (LACT)	700 BBL/Hr	2	7	52
83-13	TEX Steam Chemical Pump	54 CF/Hr	24	7	52
83-14	Emergency Burn Pit	437.5 CF/Hr	0.5	7	52
83-15	Glycol Unit Vent	10.5 MM BTU/Hr	24	7	52
83-16	Heater Treater #2 (Stack #1)	1.5 MM BTU/Hr	24	7	52
83-17	Heater Treater #2 (Stack #2)	1.5 MM BTU/Hr	24	7	52
84-1	1,500 HP Compressor Engine	1,200 HP	24	7	52
85-1	3,000 BBL Salt Water Tank	300 BPD	24	7	52
85-2	2,000 BBL Salt Water Tank	300 BPD	24	7	52
85-3	1,500 BBL Salt Water Tank	300 BPD	24	7	52
85-4	1,200 BBL Salt Water Tank	300 BPD	24	7	52
86-1	415 HP Compressor Engine	332 HP	24	7	52

AIR QUALITY DATA SHEET - PAGE 2

AMOCO PRODUCTION COMPANY
WILCOX PRODUCTION FACILITY CF#3
DENHAM SPRINGS, LIVINGSTON PARISH, LOUISIANA

MAXIMUM/AVERAGE EMISSIONS ARE LISTED USING THE UNITS LBS/HR

STACK	PERMITTED EMISSIONS						FEET	°F	CFM
ID	TSP	SO_2	NO_x	HC	CO	OTHER	HEIGHT	TEMP.	FLOW RATE
83-1	0/0	0.004/0.004	31.746/31.746	1.764/1.764	2.469/2.469	-	16.0	1050	3,930
83-2	-	-	-	11.678/0.538	-	-	24.0	80	-
83-3	-	-	-	4.200/0.21	-	-	24.0	80	-
83-4	-	-	-	Neg.	-	-	16.0	80	-
83-5	-	-	-	Neg.	-	-	8.0	80	-
83-6	-	-	-	Neg.	-	-	20.0	80	-
83-7	-	-	-	Neg.	-	-	20.0	80	-
83-8	-	-	-	Neg.	-	-	15.0	80	-
83-9	0.011/0.011	0.001/0.001	0.214/0.214	0.011/0.011	0.043/0.043	-	18.0	600	869
83-10	0.011/0.011	0.001/0.001	0.214/0.214	0.011/0.011	0.043/0.043	-	18.0	600	869
83-11	0.003/0.003	0.001/0.001	0.054/0.054	0.003/0.003	0.011/0.011	-	16.0	750	248
83-12	-	-	-	81.40/7.27	-	-	15.0	80	-
83-13	-	-	-	0.13/0.13	-	-	10.0	100	1.0
83-14	2.188/0.046	0.262/0.006	43.750/0.91[illegible]	2.319/0.048	8.750/0.182	-	3.0	2500	7,572

AIR QUALITY DATA SHEET - PAGE 2 (CONTINUED)

AMOCO PRODUCTION COMPANY
WILCOX PRODUCTION FACILITY CF#3
DENHAM SPRINGS, LIVINGSTON PARISH, LOUISIANA

MAXIMUM/AVERAGE EMISSIONS ARE LISTED USING THE UNITS LBS/HR

STACK	PERMITTED EMISSIONS						FEET	°F	CFM
ID	TSP	SO_2	NO_x	HC	CO	OTHER	HEIGHT	TEMP.	FLOW RATE
83-15	-	-	-	2.16/2.16	-	-	14.0	230	9.7
83-16	0.011/0.011	0.001/0.001	0.214/0.214	0.011/0.011	0.043/0.043	-	18.0	600	869
83-17	0.011/0.011	0.001/0.001	0.214/0.214	0.011/0.011	0.043/0.043	-	18.0	600	869
84-1	0/0	0.005/0.005	9.524/9.524	2.646/2.646	5.291/5.291	-	16.0	1050	5,895
85-1	-	-	-	Neg.	-	-	24.13	80	-
85-2	-	-	-	Neg.	-	-	16.0	80	-
85-3	-	-	-	Neg.	-	-	24.0	80	-
85-4	-	-	-	Neg.	-	-	24.0	80	-
86-1	0/0	0.001/0.001	13.175/13.175	0.732/0.732	1.025/1.025	-	12.0	1050	1,630

AIR QUALITY DATA SHEET
PAGE 3

AMOCO PRODUCTION COMPANY
WILCOX PRODUCTION FACILITY CF#3
DENHAM SPRINGS, LIVINGSTON PARISH, LOUISIANA

	TONS PER YEAR					
STACK I.D.	TSP	SO_2	NO_x	HC	CO	OTHER
83-1	0	0.015	139.048	7.725	10.815	-
83-2	-	-	-	2.577	-	-
83-3	-	-	-	0.920	-	-
83-4	-	-	-	Neg.	-	-
83-5	-	-	-	Neg.	-	-
83-6	-	-	-	Neg.	-	-
83-7	-	-	-	Neg.	-	-
83-8	-	-	-	Neg.	-	-
83-9	0.047	0.006	0.939	0.050	0.188	-
83-10	0.047	0.006	0.939	0.050	0.188	-
83-11	0.011	0.001	0.235	0.012	0.047	-
83-12	-	-	-	31.85	-	-
83-13	-	-	-	0.57	-	-
83-14	0.200	0.024	3.990	0.212	0.798	-
83-15	-	-	-	9.44	-	-
83-16	0.047	0.006	0.939	0.050	0.188	-
83-17	0.047	0.006	0.939	0.050	0.188	-
84-1	0.0	0.023	41.714	11.587	23.175	-
85-1	-	-	-	Neg.	-	-
85-2	-	-	-	Neg.	-	-
85-3	-	-	-	Neg.	-	-
85-4	-	-	-	Neg.	-	-
86-1	0.0	0.006	57.705	3.206	4.488	-

PUBLIC NOTICE
REQUEST FOR PUBLIC COMMENT ON FACILITY MODIFICATION
OIL AND GAS PRODUCTION FACILITY
AMOCO PRODUCTION COMPANY
DENHAM SPRINGS, LIVINGSTON PARISH, LOUISIANA

Amoco Production Company, Post Office Box 50879, New Orleans, Louisiana 70150, has requested authority to modify the operation of Wilcox Production Facility CF#3 at Lockhart Crossing Field near Denham Springs, Livingston Parish. A permit application was submitted to the Air Quality Division on March 4, 1988.

Amoco proposes to bring under permit a 400 HP rental compressor and to retrofit an existing 1500 HP compressor with a catalytic converter to reduce NO_x emissions at the site. Emissions of pollutants at the facility in tons per year are estimated as follows:

Pollutant	Estimated Emissions
Particulate	0.41
SO_2	0.12
NO_x	246.46
HC	68.28
CO	40.10

Dispersion modeling predicts a maximum annual ground level NO_x concentration of 65.43 ug/m^3, which is below the National Ambient Air Quality Standards of 100 ug/m^3.

A copy of all the material submitted by the applicant and the proposed draft permit are available for inspection and review at the Office of Air Quality and Nuclear Energy, Air Quality Division, State Land and Natural Resources Building (8th floor), 625 North Fourth Street, Baton Rouge, Louisiana.

Written comments on the proposed project may be submitted to Mr. Harendra Raol, Air Permits Program Manager, Air Quality Division, P. O. Box 44096, Baton Rouge, Louisiana 70804.

METER BOX CALIBRATION DATA AND CALCULATION FORM

(English Units)

Leak Check Good @ 0.0110

T.D.G.M.R. 861.621

Date 06 29 89

Meter box number 481

Barometric pressure, P_b 29.97 in. Hg

Calibrated by K. Thibodeaux

Orifice manometer setting (ΔH), in. H_2O	Wet test meter (V_w), ft^3	Dry gas meter (V_d), ft^3	Wet test meter (t_w), °F	Dry gas meter Inlet (t_{d_i}), °F	Dry gas meter Outlet (t_{d_o}), °F	Dry gas meter Avg[a] (t_d), °F	Time (θ), min.
0.75	5	866.684	79.2	88 / 98	88 / 89		10.58
1.0	5	871.788	79.4	91 / 100	89 / 89		9.23
1.5	10	882.036	79.5	99 / 104	89 / 90		14.98
2.0	10	892.441	79.7	97 / 107	91 / 93		13.12
3.0	10	902.784	80.0	103 / 105	93 / 92		10.75
4.0	10						

ΔH, in. H_2O	$\frac{\Delta H}{13.6}$	$Y_i = \frac{V_w P_b (t_d + 460)}{V_d (P_b + \frac{\Delta H}{13.6}) (t_w + 460)}$	$\Delta H@_i = \frac{0.0317 \; H}{P_b (t_d + 460)} \left[\frac{(t_w + 460)\,\theta}{V_w}\right]^2$
0.75	0.0368	1.009	1.872
1.0	0.0737	1.003	1.895
1.5	0.110	1.001	1.865
2.0	0.147	0.987	1.904
3.0	0.221	0.992	1.915
4.0	0.294		
Average		0.998	1.890

Y = Ratio of reading of wet test meter to dry test meter; tolerance for individual values ± 0.02 from average.

$H_@$ = Orifice pressure differential that equates to 0.75 cfm of air @ 68 F and 29.92 inches of mercury, in. H_2O; tolerance for individual values ± 0.20 from average.

Calibrated by Kevin L. Thibodeaux

PITOT TUBE CALIBRATION

Pitot Tube Number P-3-1 Cp (std) 0.99

Calibrated By Troy Lesage Date 5-10-89

Point Number	Standard Pitot Δp (in. H_2O)	"S" Type Pitot Δp (in. H_2O) "A" Side	"B" Side
1	1.200	1.800	1.750
2	0.645	0.945	0.945
3	0.070	0.100	0.100

Calculations:

$$Cp_{(s)} = Cp_{(std)} \times \sqrt{\frac{\Delta p\ (std)}{\Delta p\ (s)}}$$

Deviation $= Cp_{(s)} - \overline{Cp}$ (Side A or B)

Avg. Dev. $= \dfrac{\sum_{1}^{3} \left| Cp_{(s)} - \overline{Cp} \right|}{3}$ (Side A or B)

"A" Side $Cp_{(s)}$	"A" Side Deviation	"B" Side $Cp_{(s)}$	"B" Side Deviation
0.816	0.005	0.820	0.002
0.818	0.003	0.818	0.004
0.828	0.007	0.828	0.006

$\overline{Cp}$ = 0.821 = 0.822

$\left| \overline{Cp}\ (\text{Side A}) - \overline{Cp}\ (\text{Side B}) \right|$ = 0.001 (must be $\leq$ 0.01)

Avg. Dev. (Side A) = 0.005 (must be $\leq$ 0.01)

(Side B) = 0.004 (must be $\leq$ 0.01)

$Cp = \dfrac{\overline{Cp}\ (\text{Side A}) + \overline{Cp}\ (\text{Side B})}{2}$ (should be $0.80 \leq Cp \leq 0.85$) = 0.822

PITOT TUBE CALIBRATION

Pitot Tube Number P-4-1 Cp (std) 0.99

Calibrated By Troy & Billy Date 8-14-89

Point Number	Standard Pitot Δp (in. H_2O)	"S" Type Pitot Δp (in. H_2O) "A" Side	"B" Side
1	1.300	1.850	1.850
2	0.665	1.000	1.000
3	0.085	0.130	0.125

Calculations:

$$Cp_{(s)} = Cp_{(std)} \times \sqrt{\frac{\Delta p\ (std)}{\Delta p\ (s)}}$$

Deviation $= Cp_{(s)} - \overline{Cp}$ (Side A or B)

Avg. Dev. $= \dfrac{\sum_{1}^{3} \left| Cp_{(s)} - \overline{Cp} \right|}{3}$ (Side A or B)

"A" Side $Cp_{(s)}$	Deviation	"B" Side $Cp_{(s)}$	Deviation
.830	.017	.830	.012
.807	.006	.807	.011
.801	.012	.816	.002

$\overline{Cp}$ = .813 = .818

$\left| \overline{Cp}\ (\text{Side A}) - \overline{Cp}\ (\text{Side B}) \right|$ = .005 (must be $\leq$ 0.01)

Avg. Dev. (Side A) = .012 (must be $\leq$ 0.01)

(Side B) = .008 (must be $\leq$ 0.01)

$Cp = \dfrac{\overline{Cp}\ (\text{Side A}) + \overline{Cp}\ (\text{Side B})}{2}$ (should be $0.80 \leq Cp \leq 0.85$) = .816

TELEX: 510-100-8831 (ScotGas)
FAX: 714-887-0549
PHONE: 714-887-2571

Scott Specialty Gases

a division of

Scott Environmental Technology Inc. 2600 CAJON BLVD., SAN BERNARDINO, CA 92405

EMISSION TESTING
ATTN: FRED DOWLING

Shipped From: Scott SAN BERNARDINO
Date Shipped 6-8-89
Our Project No: 00848
Your P.O. No: FD051789
Page 1 of 1
Expiration Date: 12-8-90

CERTIFICATE OF ANALYSIS—EPA PROTOCOL GASES*

Certified Per Traceability Protocol No. 1 Procedure No. G1 Cylinder No. AAL-10326 Cylinder Pressure 1900 psig Certified Accuracy ±1 % NBS Traceable

REFERENCE STD

COMPONENTS	CERTIFIED CONC	SRM/CRM NO.	CYL. NO.	CONC.
Nitric Oxide	303.4 PPM	CRm 1687	AAL-19314	966 PPM
NOX	304.9 PPM			

GAS ANALYZER

MAKE/MODEL/SERIAL NO.	LAST CAL. DATE	ANALYTICAL PRINCIPLE
Thermo-Electron	5-2-89	Chemi-Luminenscent
10 AR S/N 14853-150		

BALANCE GAS Nitrogen

ANALYZER READINGS: Z = Zero Gas T = Test Gas R = Reference Gas

Component Nitric Oxide
First Analysis Date 5-31-89 Units PPM

Z 0.00	R 95.22	T 29.79
R 95.22	Z 0.01	T 29.82
Z 0.00	T 29.89	R 95.40

Mean Test Assay 302.5

Second Analysis Date 6-7-89 Units PPM

Z 0.05	R 96.55	T 30.32
R 96.37	Z 0.04	T 30.30
Z 0.03	T 30.47	R 96.79

Mean Test Assay 303.4

Component _____
Date _____ Units _____

Z	R	T
R	Z	T
Z	T	R

Mean Test Assay _____

Date _____ Units _____

Z	R	T
R	Z	T
Z	T	R

Mean Test Assay _____

Component _____
Date _____ Units _____

Z	R	T
R	Z	T
Z	T	R

Mean Test Assay _____

Date _____ Units _____

Z	R	T
R	Z	T
Z	T	R

Mean Test Assay _____

Chronology: Date _____
Assay _____

Analyst Doug Hagberg

Approved By: [signature]

Scott Specialty Gases

a division of Scott Environmental Technology, Inc.

1290 COMBERMERE STREET, TROY, MICHIGAN 48084 (313) 589-2950

Shipped From : Scott Troy
Date Shipped :
Our Project # : 930510
Your P.O. # : BB0913-3
Page ___ of ___
Expiration Date : 3-29-90

Customer :
EMMISSIONS TESTING SERVICE
P.O. BOX 15075
BATON ROUGE, LA 70895

**** CERTIFICATE OF ANALYSIS - EPA PROTOCOL GASES ****

Certified Per Traceability Protocol # 1

Procedure # G1

File # P01764

Certified Accuracy 1 % NBS Traceable

Cylinder Number ALM-1724

Cylinder Pressure 2000 psig

COMPONENT	CERTIFIED CONC.	REFERENCE STD SRM # (CRM #)	REFERENCE STD CYLINDER NUMBER	REFERENCE STD CONC.	GAS ANALYZER MAKE/MODEL/SERIAL #	GAS ANALYZER LAST CALIBRATION DATE	ANALYTICAL PRINCIPLE
NITRIC OXIDE	895.5 PPM	1687B	AAL19320	965.7 PPM	HORIBA	9-29-88	CHEMILUMINESCENCE
		GMIS	AAL-20920	589.4 PPM			

BALANCE GAS : NITROGEN

NITROGEN DIOXIDE 3.00 PPM

898.5

FIRST ANALYSIS DATE : 9-22-88

ZERO GAS (mV)	TEST GAS (mV)	RESULTS PPM	REFERENCE GAS CONC.	REFERENCE GAS (mV)	RESULTS PPM
0.00	89.40	894.6	965.7 PPM	96.50	965.7
0.00	89.60	896.6		96.50	965.7
0.00	89.40	894.6		96.50	965.7

CALCULATED RESULTS 894.6, 896.6, 894.6

AVERAGE : 895.3 PPM

SECOND ANALYSIS DATE : 9-29-88

ZERO GAS (mV)	TEST GAS (mV)	RESULTS PPM	REFERENCE GAS CONC.	REFERENCE GAS (mV)	RESULTS PPM
0.00	89.50	895.6	965.7 PPM	96.50	965.7
0.00	89.50	895.6		96.50	965.7
0.00	89.50	895.6		96.50	965.7
0.00	89.80 NOX	898.6			

CALCULATED RESULTS 895.6, 895.6, 895.6

898.6 PPM NOX

AVERAGE : 895.6 PPM

CALIBRATION CURVE 1 st DEGREE

SRM # (CRM #)	CONC. PPM	SPLIT PT (%)	DVM (mV)	FITTED VALUE	PERCENT ERROR
1687B	965.7	100	96.50	965.7	.00
	772.6	80	77.10	771.5	-0.14
	579.4	60	57.70	577.3	-0.37
	386.3	40	38.50	385.1	-0.32
	193.1	20	19.50	194.8	0.88
	0.0000	0	0.00	0.0000	0.00
	0.00			0.00	0.00
1685B	219.0	LOW	21.80	217.9	-0.52
	589.4	GMIS	59.00	590.4	0.17

: GMIS - GAS MANUFACTURER'S INTERNAL STANDARD

Analyst : [signature]

Approved By : [signature]

The only liability of this Company for gas which fails to comply with this analysis shall be replacement thereof by the Company without extra cost.

LIQUID CARBONIC
SPECIALTY GAS CORPORATION

SPECIALTY GAS and CHEMICAL PRODUCTS
CERTIFICATE OF ANALYSIS

Emission Testing
10389 Mammoth Dr
BR 70814

Date: 1/18/89
Ref. # SE95576
Cust. P.O. #

Product GAs Mix

		Cyl. Serial No. CC44701	Cyl. Serial No.	Cyl. Serial No.
mponents	Requested	Actual	Actual	Actual
n Monoxide	90 ppm	92.5 ppm		
ogen		Balance		

Volume 136

'alve No. 350

Total Cyl. Pressure 2000

l of Analysis:

Chromatograph

Certified By: Jim Telgas

It is recommended the above cylinders not be depleted below 50 psig unless otherwise indicated

S C O T T S P E C I A L T Y G A S E S Scott Environmental Technology, Inc.
a division of
1290 COMBERMERE TROY, MICHIGAN 48083 TELEPHONE # (313) 589-2950 FAX: (313) 589-2134

Shipped From : Scott Troy
Date Shipped : _____
Our Project # : 928926
Your P.O. # : 88-0615-2
Page ____ of ____
Expiration Date : 1-11-90

Customer :
EMISSIONS TESTING SERVICES
P.O. BOX 15075
BATON ROUGE, LA 70895

**** CERTIFICATE OF ANALYSIS - EPA PROTOCOL GASES ****

Certified Per Traceability Protocol # 1
Procedure # G1
File # P01425
Certified Accuracy 1 % NBS Traceable

Cylinder Number AAL-1663B
Cylinder Pressure 2000 psig

COMPONENT	CERTIFIED CONC.	REFERENCE STD: SRM # (CRM #)	CYLINDER NUMBER	CONC.	GAS ANALYZER: MAKE/MODEL/SERIAL #	LAST CALIBRATION DATE	ANALYTICAL PRINCIPLE
CARBON MONOXIDE	401.6 PPM		AAL-7813	500.1 PPM	BECKMAN	6-15-88	NON-DISPERSED INFRARED
		1679	FF-19978	95.40 PPM	_____		
		1680	FF-19741	470.00 PPM	_____		

BALANCE GAS : NITROGEN

FIRST ANALYSIS DATE : 7-1-88

ZERO GAS (mV)	TEST GAS (mV)	RESULTS PPM	REFERENCE GAS CONC.	REFERENCE GAS (mV)	RESULTS PPM
0.00	84.40	405.3	470.0 PPM	95.90	474.6
0.00	84.40	405.3		95.90	474.6
0.00	84.40	405.3		95.90	474.6
CALCULATED RESULTS		401.4			
		401.4			
		401.4			
AVERAGE :		401.4 PPM			

SECOND ANALYSIS DATE : 7-1-88

ZERO GAS (mV)	TEST GAS (mV)	RESULTS PPM	REFERENCE GAS CONC.	REFERENCE GAS (mV)	RESULTS PPM
0.00	84.40	405.3	470.0 PPM	95.90	474.6
0.00	84.30	404.7		95.60	473.7
0.00	84.20	404.2		95.70	473.4
CALCULATED RESULTS		401.4			
		401.4			
		401.3			
AVERAGE :		401.7 PPM			

CALIBRATION CURVE 2nd DEGREE

SRM # (CRM #)	CONC. PPM	SPLIT % (%)	I.R. (mV)	FITTED VALUE	FITTED ERROR
	500.1	100	99.97	499.9	-0.04
	400.1	80	83.75	401.5	0.36
	300.1	60	65.84	300.7	0.23
	200.0	40	46.29	200.0	-0.02
	100.0	20	24.54	99.40	-0.62
	0.0000	0	0.00	0.0000	0.00
	0.00			0.00	0.00
1680	470.0		95.90	474.6	0.95
1679	95.40		23.70	95.76	0.38

* GMIS - GAS MANUFACTURER'S INTERNAL STANDARD

Analyst : [signature] Approved By : J. Shapiro

Scott Specialty Gases

TROY, MI. 48083 PHONE: 313-589-2950 FAX NO: 313-589-2134

Date Shipped 10/23/87
Our Project No: 924323
Your P.O. No: VERBAL
Page ____ of ____

CERTIFICATE OF ANALYSIS – EPA PROTOCOL GASES*

(Concentrations are in mole % or ppm)

Cylinder Number AAL-837 Certified Accuracy ±1% % NBS Traceable Analysis Dates: First 9/18/87 Last 9/25/87

P-0735 CYLINDER PRESSURE 2000 PSIG

COMPONENTS	CERTIFIED CONC	EXPIRATION DATE	ANALYTICAL PRINCIPLE	PRIMARY STANDARD NBS/SRM's	REPLICATE CONCENTRATIONS FIRST	SECOND
CARBON MONOXIDE	201.74 PPM	3/25/89	BECKMAN NDIR	1680B CAL-2284 475 PPM	201.47 PPM	201.47 PPM
					201.78 PPM	202.41 PPM
NITROGEN	BALANCE			1679C CAL-5168 97.10 PPM	201.47 PPM	201.32 PPM

Cylinder Number ____ Certified Accuracy ____ % NBS Traceable Analysis Dates: First ____ Last ____

COMPONENTS	CERTIFIED CONC	EXPIRATION DATE	ANALYTICAL PRINCIPLE	PRIMARY STANDARD NBS/SRM's	REPLICATE CONCENTRATIONS FIRST	SECOND

*We hereby certify the cylinder gas has been analyzed according to EPA Protocol No:

Analyst [signature] Approved By J. Shapiro

The only liability of this Company for gas which fails to comply with this analysis shall be replacement thereof by the Company without extra cost.

CERTIFIED REFERENCE MATERIALS ■ EPA PROTOCOL GASES ■ ACUBLEND® ■ CALIBRATION & SPECIALTY GAS MIXTURES
PURE GASES ■ ACCESSORY PRODUCTS ■ CUSTOM ANALYTICAL SERVICES

PLUMSTEADVILLE, PENNSYLVANIA / SAN BERNARDINO, CALIFORNIA / HOUSTON, TEXAS / WHEELING, ILLINOIS
SOUTH PLAINFIELD, NEW JERSEY / FREMONT, CALIFORNIA / WAKEFIELD, MASSACHUSETTS / LONGMONT, COLORADO

TELEX: 510-100-8831 (ScotGas)
FAX: 714-887-0549
PHONE: 714-887-2571

Scott Specialty Gases a division of

Scott Environmental Technology Inc. 2600 CAJON BLVD., SAN BERNARDINO, CA 92405

Shipped From: Scott SAN BERNARDINO
Date Shipped 2-16-89
Our Project No: 416096
Your P.O. No: 89-0120
Page 1 of 1
Expiration Date: 8-27-90

EMISSION TESTING SERVICES
ATTN: FRED DOROLING

CERTIFICATE OF ANALYSIS—EPA PROTOCOL GASES*

Certified Per Traceability Protocol No. 1 Procedure No. G1 Cylinder No. AAL-6948 Cylinder Pressure 1900 psig Certified Accuracy 1% % NBS Traceable

REFERENCE STD					GAS ANALYZER		
COMPONENTS	CERTIFIED CONC	SRM/CRM NO.	CYL. NO.	CONC.	MAKE/MODEL/SERIAL NO.	LAST CAL. DATE	ANALYTICAL PRINCIPLE
Carbon Monoxide	90.31 PPM	SRM 2636	AAL-6965	244 PPM	Horiba AIA 24	12-7-88	Infra-red
					S/N 4564403		

BALANCE GAS Nitrogen

ANALYZER READINGS: Z = Zero Gas T = Test Gas R = Reference Gas

Component Carbon Monoxide
First Analysis Date 1-31-89 Units PPM
Z 00.0 R 92.8 T 37.5
R 92.8 Z 00.0 T 37.5
Z 00.0 T 37.5 R 92.8
Mean Test Assay 90.31

Second Analysis Date 2-7-89 Units PPM
Z 00.0 R 92.8 T 37.5
R 92.8 Z 00.0 T 37.5
Z 00.0 T 37.5 R 92.8
Mean Test Assay 90.31

Component
Date Units
Z R T
R Z T
Z T R
Mean Test Assay

Date Units
Z R T
R Z T
Z T R
Mean Test Assay

Component
Date Units
Z R T
R Z T
Z T R
Mean Test Assay

Date Units
Z R T
R Z T
Z T R
Mean Test Assay

Chronology: Date
Assay

Analyst MAYNARD JOHNSON

Approved By:

ETS
EMISSION TESTING SERVICES, INC.
P.O. BOX 15075 • BATON ROUGE, LA 70895

OXYGEN CYLINDER CERTIFICATION

Company: LIQUID CARBONIC

Analyst: TROY LESAGE

Cylinder: CC-37035

Date: APRIL 12, 1989

Instrument: ORSAT

Trial	O_2	CO_2
1	20.9	0.0
2	20.9	0.0
3	21.0	0.0
4	20.9	0.0
5	20.8	0.0
6	20.9	0.0
7	20.8	0.0
8	21.0	0.0
9	20.9	0.0
10	20.9	0.0
11	20.9	0.0
12	20.8	0.0

Mean O_2 % = 20.89

ETS
EMISSION TESTING SERVICES, INC.
P.O. BOX 15075 • BATON ROUGE, LA 70895

OXYGEN CYLINDER CERTIFICATION

Company: LIQUID CARBONIC

Analyst: TROY LESAGE

Cylinder: CC-37032

Date: APRIL 12, 1989

Instrument: ORSAT

Trial	O_2	CO_2
1	12.0	0.0
2	11.9	0.0
3	11.9	0.0
4	12.0	0.0
5	12.0	0.0
6	11.9	0.0
7	11.9	0.0
8	12.0	0.0
9	11.8	0.0
10	12.0	0.0
11	12.0	0.0
12	12.1	0.0

Mean O_2 % = 11.958

ETS
EMISSION TESTING SERVICES, INC.
P.O. BOX 15075 • BATON ROUGE, LA 70895

OXYGEN CYLINDER CERTIFICATION

Company: Quality Gas Analyst: Troy LeSage

Cylinder: # CC 78140 Date: October 6, 1989

Instrument: Orsat Analysis

Trial	O_2	CO_2
1	19.2	0.00
2	19.3	0.00
3	19.3	0.00
4	19.2	0.00
5	19.4	0.00
6	19.4	0.00
7	19.4	0.00
8	19.3	0.00
9	19.4	0.00
10	19.4	0.00
11	19.3	0.00
12	19.4	0.00

TOTALS:

Mean O_2 % avg.= 19.333%

LIQUID CARBONIC
SPECIALTY GAS CORPORATION

SPECIALTY GAS and CHEMICAL PRODUCTS

CERTIFICATE OF ANALYSIS

To: Emmission Testing

Date: 6/23/88

Ref. #

Cust. P.O. #

Product: Oxygen, Nitrogen

		Cyl. Serial No.	Cyl. Serial No.	Cyl. Serial No.
		CC41973		
Components	**Requested**	**Actual**	**Actual**	**Actual**
Oxygen		13.08%		molar %
Nitrogen		balance		

Cyl. Volume

CGA Valve No. 590

Total Cyl. Pressure 2000 psi

Method of Analysis:

Gravimetric

Certified By: Burrell Zeh

It is recommended the above cylinders not be depleted

SOUTHERN PETROLEUM LABORATORIES, INC.

Certificate of Analysis No. G1031865

Company: AMOCO PRODUCTION COMPANY
Location: STACK ID 84-1
Field: LOCKHART CROSSING CF #3
Sample of: FUEL GAS
Sample point: STARTING
Sampled by: M. CORMIER (AMOCO)
Sample date: 10/30/89 at 7:25 pm

For: AMOCO PRODUCTION COMPANY
P. O. BOX 21668
TULSA, OK 74121-1668

November 01, 1989

Analysis:

	Mol %	GPM at 15.025 psia
Oxygen	0.00	
Nitrogen	0.56	
Carbon dioxide	1.11	
Methane	79.32	
Ethane	7.13	1.945
Propane	6.06	1.703
Iso-butane	1.93	0.644
N-butane	1.76	0.566
Iso-pentane	0.82	0.306
N-pentane	0.48	0.177
Hexanes	0.41	0.172
Heptanes plus	0.42	0.208
	---	---
	100.00	5.721

Specific Gravity at 60 deg.F. (air=1) 0.7649

Calculated B.T.U./cu. ft. @ 15.025 psia and 60 deg.F.
Dry basis 1331
Wet basis 1308

CARBONYL SULFIDE (COS)	.. NIL	PPM	HYDROGEN SULFIDE (H2S)	.. NIL	PPM
CARBON DISULFIDE (CS2)	.. NIL	PPM	SULFUR DIOXIDE (SO2)	.. NIL	PPM
ETHYL MERCAPTAN	.. NIL	PPM	METHYL MERCAPTAN	.. NIL	PPM
PROPYL MERCAPTAN	.. NIL	PPM	BUTYL MERCAPTAN	.. NIL	PPM

Southern Petroleum Laboratories, Inc.

John R. Angelloz, Jr.
Sampling Specialist
Emission Testing Services, Incorporated
Baton Rouge, Louisiana

EDUCATION

B.S., Engineering Technology
Louisiana State University

Engineer Officer Advanced Course, 1988
Fort Belvoir, Virginia

Engineer Officer Basic Course, 1983
Fort Belvoir, Virginia

EXPERIENCE

1984 to Present - Transferred to ETS from Kemron when ETS purchased assets. Testing Team Leader experienced in emission testing, fugitive emissions, continuous emissions and ambient air monitoring. Familiar with all routine US EPA New Source Performance Test procedures. Routinely performs source sampling and testing using Reference Method test as well as non-standard testing procedures. Conducts calibration, repair and routine maintenance of source sampling and continuous emission monitoring equipment. Responsible for equipment and crew preparation, calibration and logistics for sampling and testing projects.

1984 - Ashton and Associates - Computer Plotter Operator for engineering drawings and prints. Responsible for current materials inventory control.

1975 to 1984 - St. Alphonsus Church. Maintenance Supervisor of maintenance personnel. Responsible for scheduling work, ordering materials, quality control, maintenance safety, and time motion sequences.

MILITARY

Louisiana National Guard - CPT. - Active duty

Fred B. Dowling
President
Emission Testing Services, Incorporated
Baton Rouge, Louisiana

EDUCATION

Graduate Studies (Analytical Chemistry)
Louisiana State University

B.S., Analytical Chemistry
Louisiana State University

B.S., Chemistry
Millsaps College

EXPERIENCE

Mr. Dowling has more than 26 years experience in environmental research, systems development and technical management. His professional expertise includes air and water pollution control and industrial hygiene. He is the president of ETS.

Mr. Dowling is experienced in EPA emission monitoring methods for sources including quality assurance requirements. He has written manuals and taught seminars on the methods and their applications to specific plants. His experience with source testing covers a wide range of industrial sources - from very complicated tests determining the efficiency of computerized oxides of nitrogen recovery systems to conducting emission tests on sugar mills burning bagasse.

SOCIETIES
Air Pollution Control Association, American Chemical Society
Committees-APCA, Ambient Measurements, APCA - Source Measurements

SELECTED PUBLICATIONS
Dowling, Fred B., et al, Field Operation of a Beckman Model 6800 Environmental Chromatograph, American Chemical Society, Fisher Award Symposium Proceedings, 1974.

Dowling, Fred B., et al, Quantitative Determination of Trace Amounts of Formaldehyde, Journal of the Air Pollution Control Association, 1965.

Dowling, Fred B., et al, Monitoring Stack and Ambient Hydrocarbon Emissions, Texas Instruments Incorporated, Solvent Emission Seminar, 1979. Solicited paper.

Dowling, Fred B., A Training Manual For The Measurement of Gaseous Organic Compound Emissions By Gas Chromatography, Private Client, 1985.

Barry Gipson
Manager
Emission Testing Services, Incorporated
Baton Rouge, Louisiana

EDUCATION

Hinds Junior College	Biology
Louisiana State University	Pre-Medicine
Louisiana State University	Business Administration

OVERVIEW

Mr. Gipson has extensive experience in Emission Testing (Stack Sampling). He has personally performed over 700 source tests and coordinated over 2000 emission tests. He has performed sampling on a national scale and for hundreds of pollutants.

EXPERIENCE

1987 to Present - Manager of Emission Testing Services, Inc. Coordinating field sampling and maintaining liaison with clients, EPA and state regulatory agencies wherever testing is required. Reviews and updates EPA test methods as well as state of the art non-routine test methods. Prepares technical proposals for emission testing and coordinates reporting.

1985 to 1987 - Manager Emissions Testing Group of Kemron Environmental Services. Prepared proposals and coordinated field testing and reporting on a national level. In charge of all phases of hazardous waste, organic, and inorganic stack sampling.

1984 to 1985 - Environmental sales for the southern region for Kemron Environmental Services. Sold and provided technical proposals for Emission Testing, Ambient Air, Industrial hygiene, routine wet chemistry programs, and organic analysis. Involved in the initiation and awardal of the CLP contract for organics. Also involved in the Certification of the Laboratory for Industrial Hygiene and Asbestos samples.

1981 to 1985 - Sampling Crew Leader at Kemron Environmental Services. Sampling Specialist in emission testing. As emission testing crew-leader performed EPA reference methods, performed continuous emission monitoring for SO2, NOX, CO, O2, CO2 and speciated organics, as-well-as, performing actual physical stack sampling for routine and non-routine point sources.

1979 - 1981 - Analytical Chemist and Sampling Specialist for Kemron Environmental Services sampling air, water and stacks. Field and laboratory experience in the collection and analysis of hazardous waste, ground water and priority pollutants. Responsibilities included job preparation, coordination, calibration of equipment, analysis and training of sampling technicians. Conducted routine maintenance and repair of all source sampling equipment.

Kevin Thibodeaux
Sampling Specialist
Emission Testing Services, Incorporated
Baton Rouge, Louisiana

EDUCATION

High School Graduate

U.S. EPA Round Robin sample integrity audits

Completed Emission Testing Services Air Sampling Techniques Seminar

Participates in on going Air-Pollution Training Institute Courses (APTI)

EPA certified smoke reader (Method 9)

EXPERIENCE

1987 to Present - Emission Testing Services, Inc. - Sampling Specialist in emission testing. Performing EPA Reference Methods and non routine source evaluations. Crew leader for monitor certifications and various other source evaluations.

Responsible for the calibration of pitot tubes, control consoles, and thermocouples.