Tenneco Gas

5510 So. Rice Avenue
Houston, Texas 77081
(713) 662-5300

R7-218
5/8/89

May 3, 1989

Mr. Don Holloway
Texas Air Control Board
Technical Section
Regional Operations
5555 West Loop, Suite 300
Bellaire, Texas 77401

R7-218
Tenneco Gas

Dear Mr. Holloway

Please find enclosed two copies of the stack sampling report required for Permit No. C-18712. This permit is for three natural gas compressors in the Tenneco Gas Natural Gas Liquids/Methanol plant located in Colorado county near Eagle Lake, TX. The report is for one compressor only, emission point ID C-2. The stack sampling reports for emission points ID C-1 and ID C-3 have been sent to you previously.

If you have any questions concerning the stack sampling please contact me at (713)662-5325. Thank you for your assistance.

Very truly yours,

M.E. Peterson

cc: T.A. Pellette
P.C Martin
W.R. Scroggin
E.K. O'Gorman
K.R. Schorre
J.A. Greenwalt
S.Tise
File

EMISSIONS REPORT
FOR A
WHITE SUPERIOR
TENNECO GAS
NATURAL GAS LIQUIDS/METHANOL
CHESTERVILLE PLANT
Eagle Lake, TX
April 5, 1989

Prepared for the

TEXAS AIR CONTROL BOARD

By

Michael E. Peterson

TENNECO

TENNECO GAS
TECHNICAL SERVICES DEPARTMENT
5510 South Rice Avenue
Houston, TX 77081
(713) 662-5325

Contents

Table of Figures	ii
Table of Tables	iii
Introduction	1
Summary	2
Process Description	4
Sampling and Analysis Procedures	5
Appendix A Example Calculations	A-1
Appendix B Field Data	B-1
Appendix C Fuel Sample Analysis	C-1
Appendix D Calibration Results and Procedures	D-1
Appendix E Vendor Data	E-1

Table of Figures

Figure II Sample Manifold ..... - 8 -
Figure III Exhaust Sample Port Locations ..... - 8 -
Figure IV Flow Schematic for Exhaust Sampling System ..... - 9 -

Table of Tables

Test Results ..... - 3 -
Instrumentation Available ..... - 7 -

INTRODUCTION

On April 5, 1989, The Technical Services Department of Tenneco Gas performed exhaust emission measurements on an 1000 horsepower White Superior engine at the Tenneco Gas Natural Gas Liquids/Methanol Chesterville plant located near Eagle Lake, TX. The test was performed to determine the emission rate from the engine. The engine was tested by Philip C. Martin and Michael E. Peterson. Continuous exhaust monitoring analyzers were used to determine exhaust concentrations of oxygen, carbon monoxide, nitric oxide, and total oxides of nitrogen.

Don Holloway from the Texas Air Control Board Regional Operations office in Bellaire, Texas observed the testing of the engine.

SUMMARY

Engine Emissions:

Parameter	Run #1	Run #2	Run #3	Permitted rate
NO_x lbs./hr.	3.78	1.51	1.15	11.02
CO lbs./hr.	1.93	1.95	1.68	22.05

The engine was tested at three different operating conditions. Run #1 had the engine operating at maximum horsepower given the pipeline operating conditions at the time of the testing. The unit was slowed down for Run #2. Run #3 had the unit operating as slow as possible to yield a minimum horsepower output. The "Test Results" table located on the following page lists the measured emission concentrations, fuel values, and engine operating conditions obtained from the three runs. As the above results show, the engine met the permitted CO and NO_x limits over the expected operating range.

April 5, 1989 Averaged Results

White Superior	Run #1 (@ 9:22)	Run #2 (@ 9:50)	Run #3 (@ 10:23)
Fuel Consumption (SCFM)	116	104	82
Engine Horsepower	905	783	646
Engine speed (RPM)	888	803	701
Timing (° BTDC)	38	38	38
Pressures			
Suction (psig)	498.6	520.1	523.4
Discharge (psig)	796.4	785.0	757.3
Fuel at meter tube (psig)	68.3	74.3	75.9
Fuel orifice (in. H_2O)	59.2	42.8	27.3
Barometric (in. Hg)	30.10	30.10	30.10
Air manifold (psig)	10.7	9.8	7.0
Temperatures			
Exhaust (° F)	786	746	696
Fuel (° F)	68.1	70.4	73.1
Inlet Air (° F)	64	68	70
Suction (° F)	66.2	68.1	69.2
Discharge (° F)	149.0	140.2	132.1
Dry Bulb (° F)	66	66	66
Wet Bulb (° F)	52	52	52
Emissions Measured			
NO (ppm)	199.0	59.0	34.9
NO_x (ppm)	255.9	103.7	73.6 73.87
CO (ppm)	214.6	219.6	225.0
Unburnt hydrocarbons (ppm)	NA	NA	NA
O2 (%)	10.09	11.11	11.74
CO_2 (%)	5.99	5.36	4.96
Emissions Calculated			
NOx (lbs./hr.)	3.78	1.51	0.91
CO (lbs./hr.)	1.93	1.95	~~1.15~~ 1.68
Fuel Data in Mole%			
Carbon Dioxide	1.78	1.78	1.78
Nitrogen	0.64	0.64	0.64
Methane	90.93	90.93	90.93
Ethane	4.07	4.07	4.07
Propane	1.50	1.50	1.50
Isobutane	0.31	0.31	0.31
N-butane	0.37	0.37	0.37
Isopentane	0.14	0.14	0.14
N-pentane	0.09	0.09	0.09
Hexanes plus	0.17	0.17	0.17
Specific Gravity	0.6286	0.6286	0.6286
Orifice Data			
Fuel tube I.D. (inches)	3.068	3.068	3.068
Fuel orifice I.D. (inches)	.6250	.6250	.6250

PROCESS DESCRIPTION

The White Superior is a natural gas fueled reciprocating engine and is denoted as Unit #2 by plant personnel (Unit #2 on TACB Permit). The engine works much like an automobile engine. Natural gas and air are ignited in a combustion chamber or cylinder. The combustion of the air and fuel mixture cause an expansion which in turn moves the piston which in turn causes the rotation of a crankshaft. The rotation of the crankshaft is used to operate two reciprocating compressor cylinders. The compressors increase the gas pressure by reducing the gas volume. The lower pressure entering the compressor is termed the suction gas and the higher pressure gas leaving the compressor is termed discharge gas.

CHESTERVILLE PLANT UNIT #2

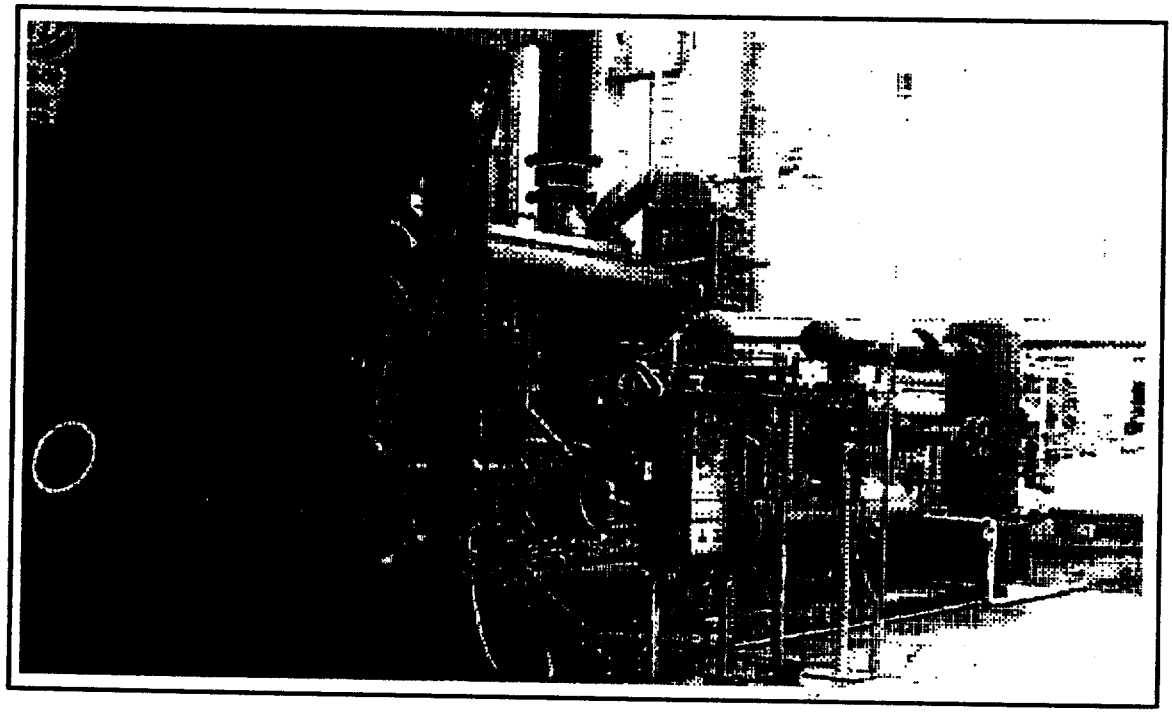

SAMPLING and ANALYSIS PROCEDURES

The emissions test was conducted by the Technical Services Department of Tenneco Gas in order to meet the requirements of Permit C-18712. The testing determined the exhaust emission rates for oxides of nitrogen and carbon monoxide. The test was conducted in basic accordance with approved Environmental Protection Agency (EPA) test methods as described in the Code of Federal Regulations, Title 40, Part 60, Appendix A and Title 40, Subpart GG.

A modified Method 20 was used to determine the exhaust oxygen, and oxides of nitrogen concentrations from the engine. The sampling procedure for CO was based on EPA Method 10, "Determination of Carbon Monoxide Emissions from Stationary Sources". The test consisted of three fifteen minute sample runs. The first run was at the maximum horsepower the engine could develop given the pipeline operating conditions. The third run was conducted at the lowest speed the engine could operate without shutting down due to low oil pressure. The second run was approximately halfway between the maximum and minimum speeds the engine could develop.

Tenneco Gas Company has conducted emission tests of reciprocating and turbine compressor engines for many years. This testing experience has enabled the Technical Services Department to design and assemble an accurate and versatile emissions test vehicle (ETV). The ETV is housed in a 32 foot trailer. A separate 8 foot trailer is used for the calibration and supply gases. The testing system is capable of continuously monitoring the following parameters:

1. Oxygen (3)
2. Total unburnt hydrocarbons (2)
3. Nitrogen oxides (3)
4. Carbon dioxide (2)
5. Carbon monoxide (3)
6. Temperature (19)
7. Pressure (14)
8. Frequency (3)

The number in parenthesis after each parameter indicates the number of analyzers, transducers, or sensors for measuring that parameter.

The instrument outputs were scanned by a Hewlett Packard 3497A Data Acquisition Control System (DACS). The data was transferred to a Hewlett Packard 9920 computer for analysis and storage. The computer monitored the readings in real-time and output the data averages to a video monitor, a printer, and a 3.5" high density disc. In addition, four strip chart channels were available as a visual aid and back-up to the data recording system. Copies of the strip chart data are included in Appendix B (Field Data) along with the output from the printer.

All instruments and transducers used in the ETV produce a linear response. The DACS sampled the response (voltage) from the instruments. The computer converted the voltage into engineering units by multiplying the voltage by a slope

and an intercept. The slope and intercept were generated by introducing a zero concentration of span gas (zero grade air for NO and NO_x analyzers, zero grade nitrogen for O_2 and CO analyzers) and then a known span gas. A copy of the voltages recorded and the slopes and intercepts for all the analyzers and transducers can be found in Appendix D. The voltages for each analyzer and transducer were recorded and used in the following formula:

$$Y = MX + B$$

Where:

B = Intercept
M = Slope
X = Analyzer or transducer voltage
Y = Engineering Units

During the calibration and sampling modes the data was acquired in discrete one minute periods.

Exhaust gas entered the system through a 3/8" stainless steel probe with eight 1/8" sampling holes, a 3-way calibration/sample valve assembly, and a glass wool filter. The sampling holes were located 1, 1.4, 2.6, 4.4, 9.14, 10.9, 12.1, and 12.5 inches from the interior wall of the exhaust stack. Figure II is an illustration of the sampling probe. Figure III shows the location of the sampling ports that were used on the exhaust stack. The sample was transported via a heat-traced Teflon sample line through a stainless steel sample pump onto a minimum contact condenser especially designed to dry the sample. The sample was then passed through 3/8" Teflon tubing to a Balston Microfibre coalescing filter and then to the sample manifold. The sample manifold was maintained at a constant pressure by means of a pressure bypass regulator. Stainless steel needle valves controlled the sample flow to each analyzers. A flowmeter in line at the exhaust of each analyzer monitored exact sample flows except for the NO_x and CO analyzers, in which case the rotometer was placed in the bypass line. These two types of analyzers are treated differently since they have their own sampling pumps and capillary flow controlling systems. See Figure IV for the flow schematic of the entire sampling system. Continuous analyzers were used to determine the NO, NO_x, CO, THC, CO_2, and O_2. See Table II for the analyzers and the methods of analysis.

Humidity was measured by a portable hygrometer and ambient temperature by a Type K thermocouple.

Table II

INSTRUMENTATION AVAILABLE				
Parameters	Manufacturer and Model	Detection Principle	Range	Number
NO_x	TECO Model 10 AR	Thermal reduction of NO_2 to NO. Chemiluminescent reaction of NO with O_3	0 to 250 ppm	2
CO	TECO Model 48	NDIR with Gas Filter Correlation	0 to 100 ppm	1
CO_2	Infrared Industries Model 702	NDIR	0 to 10%	1
THC	Beckman Instruments Model 400	Flame ionization	Variable to 10000 ppm	2
O_2	Beckman Instruments Model 755	Paramagnetic	0 to 25%	3
CO/CO_2	Infrared Industries Model 704	NDIR	0 to 1000 ppm/0 to 10 %	1
Temperature	Omega Instruments Type K	Chromel-alumel thermocouple	(-328) to 2282 °F	18
Temperature	Sto-Lab Model 921A	Platinum resistant temperature device	(-121) to 392 °F	3
Temperature	Rosemount Model 444 (Fuel orifice tube)	Platinum resistant temperature device	32 to 183 °F	1
Pressure	Validyne Model 151	Variable magnetic reluctance	Variable to 3200 psig	6
Pressure	Datametrics Model 590 Barocel	Variable capacitance	0 to 100 inches of water	3
Pressure	Sensotech Super TJE and Series Z	Strain gauge	0 to 1500 psig and 0 to 40 psig	3
Pressure	Rosemount Models 1151 DP and 1151 GP (Fuel orifice tube)	Variable capacitance	0 to 100 inches of water and 0 to 200 psig	2

Sample Manifold

Figure II

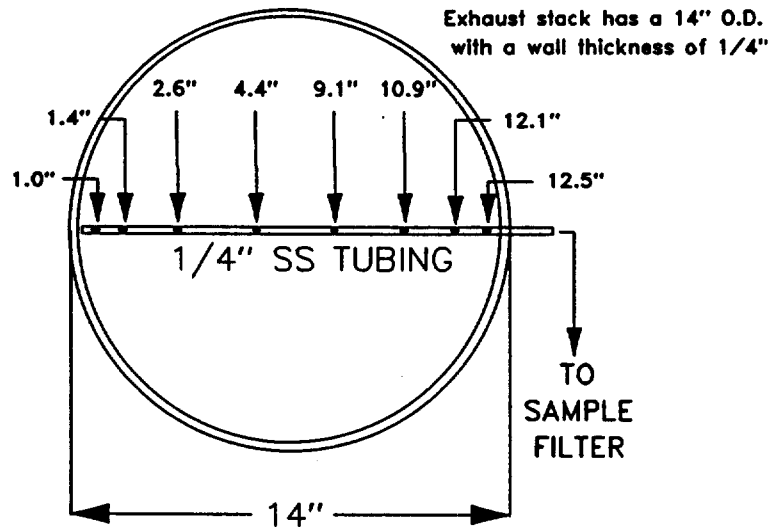

Exhaust Sample Port Locations

Figure III

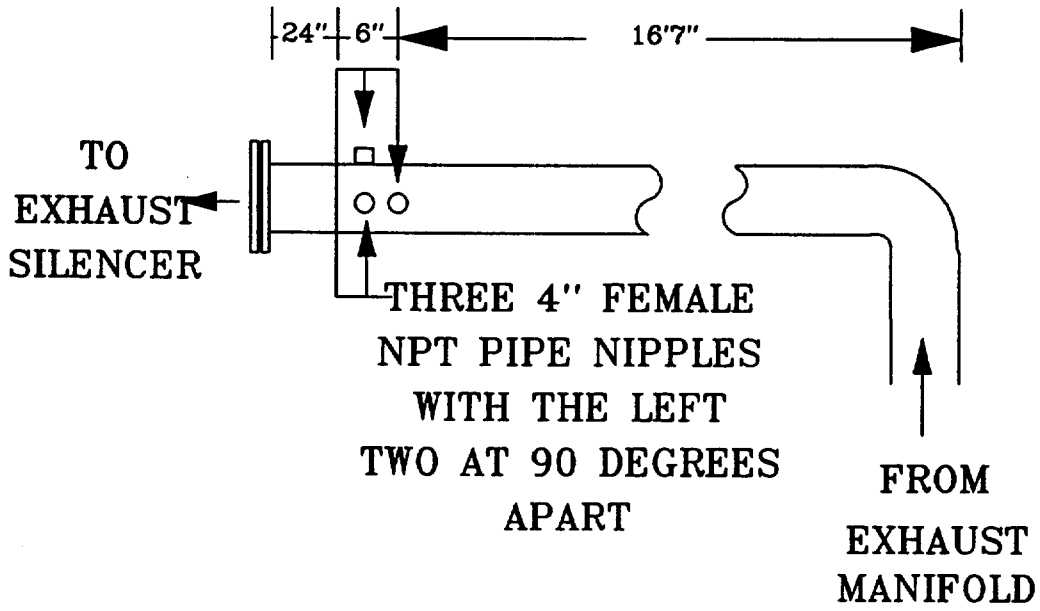

FIGURE IV Flow Schematic For Exhaust Sampling System

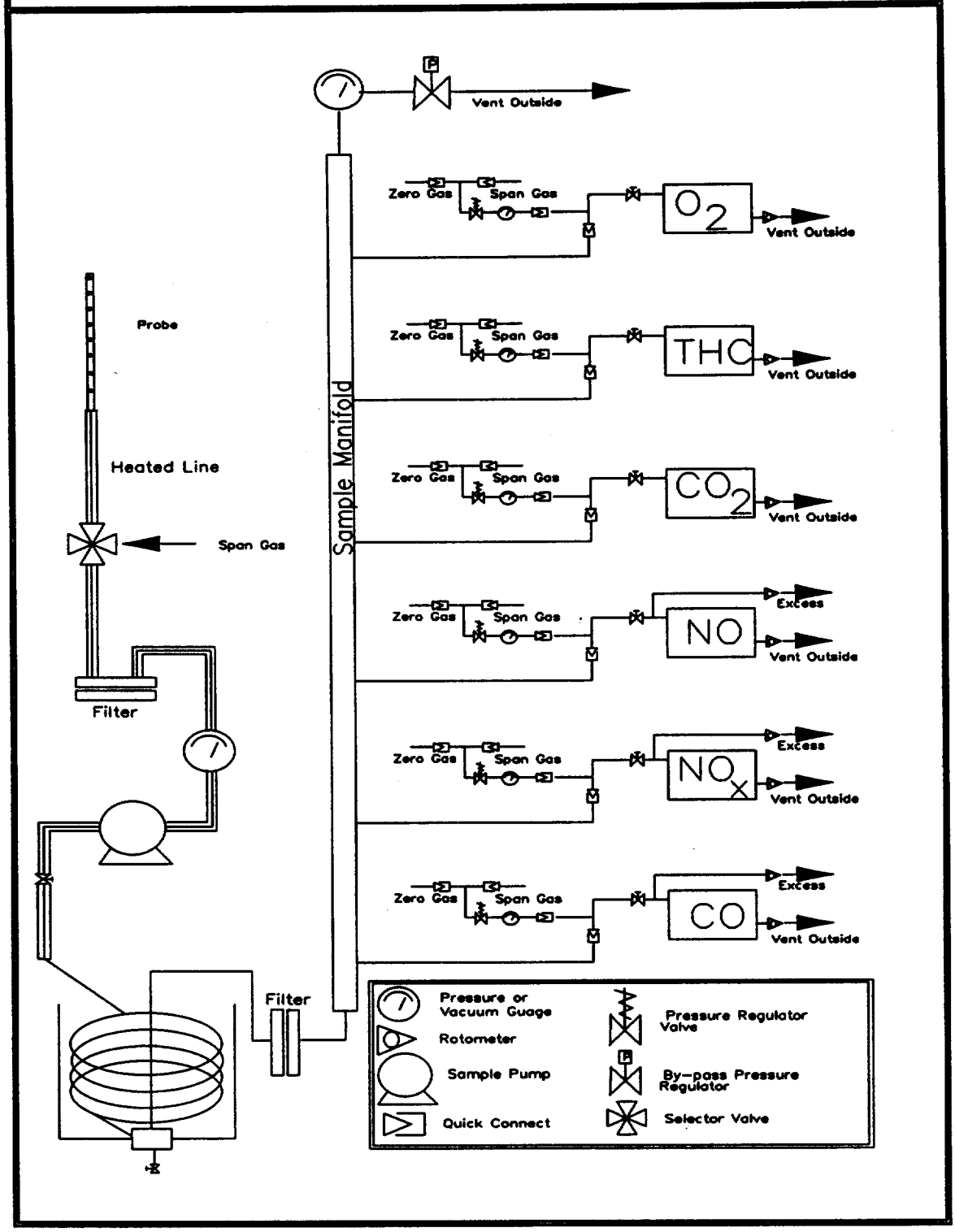

The fuel usage was determined by means of a fuel orifice meter tube. The meter tube was equipped with two pressure transducers (fuel pressure and fuel differential) and a temperature sensor (fuel temperature). The computer recorded the pressures and temperature and performed flow calculations using fuel concentrations from a previous sample. A sample of the fuel gas was taken during the testing and later analyzed at the Tenneco Gas Technical Services Department. Results of this analysis are located in Appendix C. The fuel usage rate was recalculated using this analysis.

APPENDIX A

EXAMPLE CALCULATIONS

This appendix is designed to illustrate how the fuel rate, horsepower, and mass emission rate was calculated by the Technical Services Department of Tenneco Gas. Parameters from Run #1 have been used in the equations.

FUEL RATE

The fuel rate was measured by means of a portable orifice tube built to AGA Report No. 3 specifications. The orifice tube is transported with the ETV and can be equipped with different orifice plates to accurately measure fuel rates for engines from 400 to 15000 horsepower. The fuel rate was calculated using the following equations:

Reference: Orifice Meter Constants, Handbook E-2 (Based on AGA Report No. 3) by H.V. Beck, American Meter Company (1955)

$$C' = Fb * Fpb * Ftb * Fg * Ftf * Fr * Y2 * Fpv * Fm$$

$$Qh = C' * \sqrt{hw * Pf}$$

$$Q_{tm} = Qh / 60$$

Where:

Qh = Quantity of flow at base conditions, ft.^{3}/hr.
Q_{tm} = Quantity of flow at base conditions, SCFM
C' = Orifice flow constant
Fb = Basic orifice flow factor
Fpb = Pressure base factor
Fpb = Temperature base factor
Fg = Specific gravity factor
Ftf = Flowing temperature factor
Fr = Reynold's number factor
$Y2$ = Expansion factor (for pressure taken from a downstream tap)
Fpv = Supercompressability factor
Fm = Manometer factor
hw = Differential pressure in inches of water
Pf = Static pressure in psia

Using these values from Run #1 and the handbook:

$$
\begin{aligned}
Fb &= 78.6253 \\
Fpb &= 1.0000 \\
Ftb &= 1.0000 \\
Fg &= 1.2875 \\
Ftf &= 1.0061 \\
Fr &= 1.0008 \\
Y2 &= 1.0060 \\
Fpv &= 1.0055 \\
Fm &= 1.0000 \\
hw &= 67.0 \\
Pf &= 62.8+14.72
\end{aligned}
$$

Plugging the numbers into the equations yields:

$$103.10\overset{5}{\cancel{0}} = 78.6252*1*1*1.287\overset{5}{\cancel{4}}*1.0061*1.0008*1.00\overset{66}{\cancel{59}}*1.0055*1$$

$$\overset{7430.6}{\cancel{9065}} = 103.100*\sqrt{67.0\cancel{*}(62.8+14.72)}$$

$$\overset{123.8}{\cancel{124}} = 7435 \div 60$$

$\overset{123.8}{\cancel{124}}$ = SCFM fuel consumption

HORSEPOWER

Brake horsepower is how Tenneco Gas measures the rating of an engine. It is the amount of power required at the crankshaft to move the compressor rod and piston assembly to pump gas. The equation is as follows:

$$BHP = \frac{V_s * N}{12*33000} * \frac{n}{n-1} * Ps * \left(R - R^{\frac{1}{n}}\right) * \left(\frac{1+m}{R^{\frac{1}{n}}} - m\right) * \frac{F}{.95}$$

Where:

V_s = Swept volume (in^3) same

N = RPM change

n = Polytropic Gas Constant (for an Isentropic process n = 1.28)

P_s = Suction pressure (PSIA) change

R = Compression Ratio same

m = m - value = (Fixed clearance + Pocket clearance)/Swept Volume same

F = Loss factor

and .95 is the mechanical efficiency given by the manufacturer same

Using these parameters from Run #1 and the manufacturer:

V_s = 1314

N = 888

n = 1.28

P_s = 460.9*((498.6 + 14.72) * .898) A 10.172% valve loss is cited by manufacturer.

R = 1.94

m = .1657

F = 1

$$BHP = \frac{1314\ N}{376000} * 4.0514 * P_s * 0.2618 * .5289 * 1.0526$$

$$= .0023\ N\ P_s$$

$$= 941\ BHP$$

Plugging the numbers into the equations yields:

$$BHP = \frac{1314*888}{12*33000} * \frac{1.28}{1.28-1} * 461.4 * \left(1.94 - 1.94^{\frac{1}{1.28}}\right) * \left(\frac{1+.1657}{1.94^{\frac{1}{1.28}}} - .1657\right) * \frac{1}{.95}$$

$$BHP = 905$$

$$BHP = 955 = (905 + 50)$$

50 horsepower was added for parasitic load (fans and pumps)

MASS EMISSIONS CALCULATIONS

The F-factor Method was used to calculate the mass emission rates for CO and NOx. A Fd factor of 8710 dscf per 10^6 BTU was used and can be found in Table 19-1 of EPA Method 19, "Determination of Sulfer Dioxide Removal Efficiency and Particulate, Sulfer Dioxide and Nitrogen Oxides Emission Rates from Electric Utility Steam Generators" for natural gas. The emission rate was calculated using the following equation.

$$Em = Cd \times Fd \times \frac{20.9}{(20.9 - \%O_2)} \times Qh \times GCV_d + 10^6$$

Where:

Cd = pollutant concentration, lb/scf

Em = pollutant emission rate, lb/hr

Fd = is the average F-Factor for Cd measurements on a dry basis, dscf per 10^6 BTU (8710 dscf per 10^6 BTU for natural gas)

$\%O_2$ = exhaust oxygen concentration in percent, measured on a dry basis

Qh = fuel rate, scfh

GCV_d = gross calorific value for the fuel gas on a dry basis BTU/scf

The following conversion factors will be used to correct the pollutant concentration in ppm to lb/scf.

To Convert from	To Cd	Multiply By
ppm CO	lb/scf	7.268×10^{-8}
ppm NO_x	lb/scf	1.194×10^{-7}

Using these parameters from Run #1 for NO_x:

$$Cd = (490.6) \times (1.194 \times 10^{-7})$$

$$Fd = 8710$$

$$\%O_2 = 6.51$$

$$Qh = \cancel{124}\ 116\ SCFM \times 60$$

$$GCV_d = 1055$$

Plugging the numbers into the equations yields:

$$Em = (490.6) \times (1.194 \times 10^{-7}) \times 8710 \times \frac{20.9}{(20.9 - 6.51)} \times (\cancel{124}\ 116 \times 60) \times 1055 \div 10^6$$

$$Em = \cancel{5.82}\ 3.78$$

APPENDIX B

FIELD DATA

Run 1

EMISSIONS TEST

STATION # 19 ENGINE# 2

5 Apr 1989 09:22:24

*** GAS CONCENTRATIONS ***

#	INSTRUMENT LABEL	VALUE	UNITS	#	INSTRUMENT LABEL	VALUE	UNITS
3	Outlet NO	177.1	ppm	4	Outlet NOX	232.1	ppm
5	Ambient NO	0	ppm	6	Ambient NOX	0	ppm
7	Inlet CO	0	ppm	8	Inlet CO2	0	%
9	Outlet CO	215.4	ppm	10	Outlet CO2	6.018	%
11	Inlet Total HC	0	ppm	12	Outlet Total HC	18280	ppm
13	Inlet O2	0	%	14	Outlet O2	10.1	%
15	Ambient O2	0	%				

*** ENGINE PARAMETERS ***

#	INSTRUMENT LABEL	VALUE	UNITS	#	INSTRUMENT LABEL	VALUE	UNITS
80	Engine Speed	884.2	RPM	26	Suction (S)	497.9	psig
81	Unused	0	RPM	27	Discharge (S)	793.9	psig
33	Barocel 1	0	InH2O	28	Air Manifold	10.74	psig
34	Barocel 2	0	InH2O	82	Unused	0	HZ
35	Barocel 3	-.6543		83	Unused	0	GPM

*** FUEL TUBE PARAMETERS ***

#	INSTRUMENT LABEL	VALUE	UNITS	#	INSTRUMENT LABEL	VALUE	UNITS
23	Fuel Press.(R)	67.87	psig	24	Fuel Temp.(R)(RTD)	67.68	Deg F
25	Fuel Diff.(R)	59.5	InH2O				

*** TEMPERATURES ***

#	INSTRUMENT LABEL	VALUE	UNITS	#	INSTRUMENT LABEL	VALUE	UNITS
1	Suction Temp.(K)	0	Deg F	2	Discharge Temp.(K)	0	Deg F
3	Exhaust Stack (K)	787.8	Deg F	4	Sample Filter (K)	246.1	Deg F
5	After Pump (K)	229.1	Deg F	6	Ice Bath (K)	34.99	Deg F
7	Unused	0	Deg F	8	Inlet Air (K)	62.41	Deg F
9	Ambient (K)	66.09	Deg F	10	Unused	0	Deg F
11	Unused	0	Deg F	12	Unused	0	Deg F
13	Unused	0	Deg F	14	Unused	0	Deg F
15	Unused	0	Deg F	16	Unused	0	Deg F
17	Unused	0	Deg F	18	Suction(RTD)	66.04	Deg F
19	Discharge(RTD)	148.4	Deg F				

Barometric Press. 29.88 InHg Specific Gravity .5992

*** SCANNING PERIOD IS 1 MINUTE(S) ***

COMMENTS: Fuel tube 3.068 in. diameter with a .6250 orifice
TOC UNIT #2 WHITE SUPERIOR
EMISSIONS COMPLIANCE TEST

** Concentrations and Parameters compiled using file C0918 **

EMISSIONS TEST

STATION # 19 ENGINE# 2

5 Apr 1989 09:23:39

*** GAS CONCENTRATIONS ***

#	INSTRUMENT LABEL	VALUE	UNITS	#	INSTRUMENT LABEL	VALUE	UNITS
3	Outlet NO	185.2	ppm	4	Outlet NOX	242.1	ppm
5	Ambient NO	0	ppm	6	Ambient NOX	0	ppm
7	Inlet CO	0	ppm	8	Inlet CO2	0	%
9	Outlet CO	215.1	ppm	10	Outlet CO2	6.003	%
11	Inlet Total HC	0	ppm	12	Outlet Total HC	18470	ppm
13	Inlet O2	0	%	14	Outlet O2	10.12	%
15	Ambient O2	0	%				

*** ENGINE PARAMETERS ***

#	INSTRUMENT LABEL	VALUE	UNITS	#	INSTRUMENT LABEL	VALUE	UNITS
80	Engine Speed	892.9	RPM	26	Suction (S)	497.1	psig
81	Unused	0	RPM	27	Discharge (S)	793	psig
33	Barocel 1	0	InH20	28	Air Manifold	10.71	psig
34	Barocel 2	0	InH20	82	Unused	0	HZ
35	Barocel 3	-.3844		83	Unused	0	GPM

*** FUEL TUBE PARAMETERS ***

#	INSTRUMENT LABEL	VALUE	UNITS	#	INSTRUMENT LABEL	VALUE	UNITS
23	Fuel Press.(R)	67.76	psig	24	Fuel Temp.(R)(RTD)	67.69	Deg F
25	Fuel Diff.(R)	59.66	InH20				

*** TEMPERATURES ***

#	INSTRUMENT LABEL	VALUE	UNITS	#	INSTRUMENT LABEL	VALUE	UNITS
1	Suction Temp.(K)	0	Deg F	2	Discharge Temp.(K)	0	Deg F
3	Exhaust Stack (K)	786.8	Deg F	4	Sample Filter (K)	244.9	Deg F
5	After Pump (K)	229.7	Deg F	6	Ice Bath (K)	34.88	Deg F
7	Unused	0	Deg F	8	Inlet Air (K)	62.27	Deg F
9	Ambient (K)	67.5	Deg F	10	Unused	0	Deg F
11	Unused	0	Deg F	12	Unused	0	Deg F
13	Unused	0	Deg F	14	Unused	0	Deg F
15	Unused	0	Deg F	16	Unused	0	Deg F
17	Unused	0	Deg F	18	Suction(RTD)	66.04	Deg F
19	Discharge(RTD)	148.4	Deg F				

Barometric Press. 29.88 InHg Specific Gravity .5992

*** SCANNING PERIOD IS 1 MINUTE(S) ***

COMMENTS: Fuel tube 3.068 in. diameter with a .6250 orifice
TOC UNIT #2 WHITE SUPERIOR
EMISSIONS COMPLIANCE TEST

** Concentrations and Parameters compiled using file C0918 **

EMISSIONS TEST

STATION # 19 ENGINE# 2

5 Apr 1989 09:24:56

*** GAS CONCENTRATIONS ***

#	INSTRUMENT LABEL	VALUE	UNITS	#	INSTRUMENT LABEL	VALUE	UNITS
3	Outlet NO	185.3	ppm	4	Outlet NOX	242.6	ppm
5	Ambient NO	0	ppm	6	Ambient NOX	0	ppm
7	Inlet CO	0	ppm	8	Inlet CO2	0	%
9	Outlet CO	215	ppm	10	Outlet CO2	6.001	%
11	Inlet Total HC	0	ppm	12	Outlet Total HC	18420	ppm
13	Inlet O2	0	%	14	Outlet O2	10.1	%
15	Ambient O2	0	%				

*** ENGINE PARAMETERS ***

#	INSTRUMENT LABEL	VALUE	UNITS	#	INSTRUMENT LABEL	VALUE	UNITS
80	Engine Speed	888.9	RPM	26	Suction (S)	497.7	psig
81	Unused	0	RPM	27	Discharge (S)	792.1	psig
33	Barocel 1	0	InH2O	28	Air Manifold	10.71	psig
34	Barocel 2	0	InH2O	82	Unused	0	HZ
35	Barocel 3	-.3446		83	Unused	0	GPM

*** FUEL TUBE PARAMETERS ***

#	INSTRUMENT LABEL	VALUE	UNITS	#	INSTRUMENT LABEL	VALUE	UNITS
23	Fuel Press.(R)	67.92	psig	24	Fuel Temp.(R)(RTD)	67.7	Deg F
25	Fuel Diff.(R)	59.36	InH2O				

*** TEMPERATURES ***

#	INSTRUMENT LABEL	VALUE	UNITS	#	INSTRUMENT LABEL	VALUE	UNITS
1	Suction Temp.(K)	0	Deg F	2	Discharge Temp.(K)	0	Deg F
3	Exhaust Stack (K)	787.4	Deg F	4	Sample Filter (K)	244	Deg F
5	After Pump (K)	231	Deg F	6	Ice Bath (K)	34.99	Deg F
7	Unused	0	Deg F	8	Inlet Air (K)	62.39	Deg F
9	Ambient (K)	68.89	Deg F	10	Unused	0	Deg F
11	Unused	0	Deg F	12	Unused	0	Deg F
13	Unused	0	Deg F	14	Unused	0	Deg F
15	Unused	0	Deg F	16	Unused	0	Deg F
17	Unused	0	Deg F	18	Suction(RTD)	66.1	Deg F
19	Discharge(RTD)	148.4	Deg F				

Barometric Press. 29.88 InHg Specific Gravity .5992

*** SCANNING PERIOD IS 1 MINUTE(S) ***

COMMENTS: Fuel tube 3.068 in. diameter with a .6250 orifice
TOC UNIT #2 WHITE SUPERIOR
EMISSIONS COMPLIANCE TEST
** Concentrations and Parameters compiled using file C0918 **

EMISSIONS TEST

STATION # 19 ENGINE# 2

5 Apr 1989 09:26:10

*** GAS CONCENTRATIONS ***

#	INSTRUMENT LABEL	VALUE	UNITS	#	INSTRUMENT LABEL	VALUE	UNITS
3	Outlet NO	187.8	ppm	4	Outlet NOX	245.1	ppm
5	Ambient NO	0	ppm	6	Ambient NOX	0	ppm
7	Inlet CO	0	ppm	8	Inlet CO2	0	%
9	Outlet CO	215.6	ppm	10	Outlet CO2	5.99	%
11	Inlet Total HC	0	ppm	12	Outlet Total HC	18560	ppm
13	Inlet O2	0	%	14	Outlet O2	10.11	%
15	Ambient O2	0	%				

*** ENGINE PARAMETERS ***

#	INSTRUMENT LABEL	VALUE	UNITS	#	INSTRUMENT LABEL	VALUE	UNITS
80	Engine Speed	886.7	RPM	26	Suction (S)	497.9	psig
81	Unused	0	RPM	27	Discharge (S)	792.7	psig
33	Barocel 1	0	InH2O	28	Air Manifold	10.7	psig
34	Barocel 2	0	InH2O	82	Unused	0	HZ
35	Barocel 3	-.01542		83	Unused	0	GPM

*** FUEL TUBE PARAMETERS ***

#	INSTRUMENT LABEL	VALUE	UNITS	#	INSTRUMENT LABEL	VALUE	UNITS
23	Fuel Press.(R)	68.08	psig	24	Fuel Temp.(R)(RTD)	67.74	Deg F
25	Fuel Diff.(R)	59.34	InH2O				

*** TEMPERATURES ***

#	INSTRUMENT LABEL	VALUE	UNITS	#	INSTRUMENT LABEL	VALUE	UNITS
1	Suction Temp.(K)	0	Deg F	2	Discharge Temp.(K)	0	Deg F
3	Exhaust Stack (K)	786.8	Deg F	4	Sample Filter (K)	243.3	Deg F
5	After Pump (K)	230.5	Deg F	6	Ice Bath (K)	34.89	Deg F
7	Unused	0	Deg F	8	Inlet Air (K)	62.76	Deg F
9	Ambient (K)	69.66	Deg F	10	Unused	0	Deg F
11	Unused	0	Deg F	12	Unused	0	Deg F
13	Unused	0	Deg F	14	Unused	0	Deg F
15	Unused	0	Deg F	16	Unused	0	Deg F
17	Unused	0	Deg F	18	Suction(RTD)	66.14	Deg F
19	Discharge(RTD)	148.4	Deg F				

Barometric Press. 29.88 InHg Specific Gravity .5992

*** SCANNING PERIOD IS 1 MINUTE(S) ***

COMMENTS: Fuel tube 3.068 in. diameter with a .6250 orifice
TOC UNIT #2 WHITE SUPERIOR
EMISSIONS COMPLIANCE TEST

** Concentrations and Parameters compiled using file C0918 **

EMISSIONS TEST

STATION # 19 ENGINE# 2

5 Apr 1989 09:27:23

*** GAS CONCENTRATIONS ***

#	INSTRUMENT LABEL	VALUE	UNITS	#	INSTRUMENT LABEL	VALUE	UNITS
3	Outlet NO	189.7	ppm	4	Outlet NOX	246.4	ppm
5	Ambient NO	0	ppm	6	Ambient NOX	0	ppm
7	Inlet CO	0	ppm	8	Inlet CO2	0	%
9	Outlet CO	216.8	ppm	10	Outlet CO2	5.982	%
11	Inlet Total HC	0	ppm	12	Outlet Total HC	18510	ppm
13	Inlet O2	0	%	14	Outlet O2	10.1	%
15	Ambient O2	0	%				

*** ENGINE PARAMETERS ***

#	INSTRUMENT LABEL	VALUE	UNITS	#	INSTRUMENT LABEL	VALUE	UNITS
80	Engine Speed	888.3	RPM	26	Suction (S)	498.3	psig
81	Unused	0	RPM	27	Discharge (S)	793	psig
33	Barocel 1	0	InH2O	28	Air Manifold	10.66	psig
34	Barocel 2	0	InH2O	82	Unused	0	HZ
35	Barocel 3	-.5225		83	Unused	0	GPM

*** FUEL TUBE PARAMETERS ***

#	INSTRUMENT LABEL	VALUE	UNITS	#	INSTRUMENT LABEL	VALUE	UNITS
23	Fuel Press.(R)	68.39	psig	24	Fuel Temp.(R)(RTD)	67.81	Deg F
25	Fuel Diff.(R)	58.8	InH2O				

*** TEMPERATURES ***

#	INSTRUMENT LABEL	VALUE	UNITS	#	INSTRUMENT LABEL	VALUE	UNITS
1	Suction Temp.(K)	0	Deg F	2	Discharge Temp.(K)	0	Deg F
3	Exhaust Stack (K)	786.2	Deg F	4	Sample Filter (K)	242.8	Deg F
5	After Pump (K)	230.9	Deg F	6	Ice Bath (K)	35.12	Deg F
7	Unused	0	Deg F	8	Inlet Air (K)	63.15	Deg F
9	Ambient (K)	70.15	Deg F	10	Unused	0	Deg F
11	Unused	0	Deg F	12	Unused	0	Deg F
13	Unused	0	Deg F	14	Unused	0	Deg F
15	Unused	0	Deg F	16	Unused	0	Deg F
17	Unused	0	Deg F	18	Suction(RTD)	66.16	Deg F
19	Discharge(RTD)	148.4	Deg F				

Barometric Press. 29.88 InHg Specific Gravity .5992

*** SCANNING PERIOD IS 1 MINUTE(S) ***

COMMENTS: Fuel tube 3.068 in. diameter with a .6250 orifice
TOC UNIT #2 WHITE SUPERIOR
EMISSIONS COMPLIANCE TEST
** Concentrations and Parameters compiled using file C0918 **

EMISSIONS TEST

STATION # 19 ENGINE# 2

5 Apr 1989 09:28:36

*** GAS CONCENTRATIONS ***

#	INSTRUMENT LABEL	VALUE	UNITS	#	INSTRUMENT LABEL	VALUE	UNITS
3	Outlet NO	186.5	ppm	4	Outlet NOX	242.9	ppm
5	Ambient NO	0	ppm	6	Ambient NOX	0	ppm
7	Inlet CO	0	ppm	8	Inlet CO2	0	%
9	Outlet CO	215.6	ppm	10	Outlet CO2	5.975	%
11	Inlet Total HC	0	ppm	12	Outlet Total HC	18530	ppm
13	Inlet O2	0	%	14	Outlet O2	10.11	%
15	Ambient O2	0	%				

*** ENGINE PARAMETERS ***

#	INSTRUMENT LABEL	VALUE	UNITS	#	INSTRUMENT LABEL	VALUE	UNITS
80	Engine Speed	886.7	RPM	26	Suction (S)	497.6	psig
81	Unused	0	RPM	27	Discharge (S)	793	psig
33	Barocel 1	0	InH2O	28	Air Manifold	10.66	psig
34	Barocel 2	0	InH2O	82	Unused	0	HZ
35	Barocel 3	-.6675		83	Unused	0	GPM

*** FUEL TUBE PARAMETERS ***

#	INSTRUMENT LABEL	VALUE	UNITS	#	INSTRUMENT LABEL	VALUE	UNITS
23	Fuel Press.(R)	68.08	psig	24	Fuel Temp.(R)(RTD)	67.87	Deg F
25	Fuel Diff.(R)	59.05	InH2O				

*** TEMPERATURES ***

#	INSTRUMENT LABEL	VALUE	UNITS	#	INSTRUMENT LABEL	VALUE	UNITS
1	Suction Temp.(K)	0	Deg F	2	Discharge Temp.(K)	0	Deg F
3	Exhaust Stack (K)	786	Deg F	4	Sample Filter (K)	242.3	Deg F
5	After Pump (K)	231.6	Deg F	6	Ice Bath (K)	34.97	Deg F
7	Unused	0	Deg F	8	Inlet Air (K)	63.41	Deg F
9	Ambient (K)	70.36	Deg F	10	Unused	0	Deg F
11	Unused	0	Deg F	12	Unused	0	Deg F
13	Unused	0	Deg F	14	Unused	0	Deg F
15	Unused	0	Deg F	16	Unused	0	Deg F
17	Unused	0	Deg F	18	Suction(RTD)	66.19	Deg F
19	Discharge(RTD)	148.4	Deg F				

Barometric Press. 29.88 InHg Specific Gravity .5992

*** SCANNING PERIOD IS 1 MINUTE(S) ***

COMMENTS: Fuel tube 3.068 in. diameter with a .6250 orifice
TOC UNIT #2 WHITE SUPERIOR
EMISSIONS COMPLIANCE TEST

** Concentrations and Parameters compiled using file C0918 **

EMISSIONS TEST

STATION # 19 ENGINE# 2

5 Apr 1989 09:29:50

*** GAS CONCENTRATIONS ***

#	INSTRUMENT LABEL	VALUE	UNITS	#	INSTRUMENT LABEL	VALUE	UNITS
3	Outlet NO	188.4	ppm	4	Outlet NOX	244.2	ppm
5	Ambient NO	0	ppm	6	Ambient NOX	0	ppm
7	Inlet CO	0	ppm	8	Inlet CO2	0	%
9	Outlet CO	214.4	ppm	10	Outlet CO2	5.965	%
11	Inlet Total HC	0	ppm	12	Outlet Total HC	18340	ppm
13	Inlet O2	0	%	14	Outlet O2	10.1	%
15	Ambient O2	0	%				

*** ENGINE PARAMETERS ***

#	INSTRUMENT LABEL	VALUE	UNITS	#	INSTRUMENT LABEL	VALUE	UNITS
80	Engine Speed	886.8	RPM	26	Suction (S)	498.1	psig
81	Unused	0	RPM	27	Discharge (S)	792.4	psig
33	Barocel 1	0	InH2O	28	Air Manifold	10.62	psig
34	Barocel 2	0	InH2O	82	Unused	0	HZ
35	Barocel 3	-.2715		83	Unused	0	GPM

*** FUEL TUBE PARAMETERS ***

#	INSTRUMENT LABEL	VALUE	UNITS	#	INSTRUMENT LABEL	VALUE	UNITS
23	Fuel Press.(R)	67.96	psig	24	Fuel Temp.(R)(RTD)	67.98	Deg F
25	Fuel Diff.(R)	59.06	InH2O				

*** TEMPERATURES ***

#	INSTRUMENT LABEL	VALUE	UNITS	#	INSTRUMENT LABEL	VALUE	UNITS
1	Suction Temp.(K)	0	Deg F	2	Discharge Temp.(K)	0	Deg F
3	Exhaust Stack (K)	786	Deg F	4	Sample Filter (K)	242.1	Deg F
5	After Pump (K)	231.5	Deg F	6	Ice Bath (K)	34.99	Deg F
7	Unused	0	Deg F	8	Inlet Air (K)	64.06	Deg F
9	Ambient (K)	70.1	Deg F	10	Unused	0	Deg F
11	Unused	0	Deg F	12	Unused	0	Deg F
13	Unused	0	Deg F	14	Unused	0	Deg F
15	Unused	0	Deg F	16	Unused	0	Deg F
17	Unused	0	Deg F	18	Suction(RTD)	66.22	Deg F
19	Discharge(RTD)	148.5	Deg F				

Barometric Press. 29.88 InHg Specific Gravity .5992

*** SCANNING PERIOD IS 1 MINUTE(S) ***

COMMENTS: Fuel tube 3.068 in. diameter with a .6250 orifice
TOC UNIT #2 WHITE SUPERIOR
EMISSIONS COMPLIANCE TEST

** Concentrations and Parameters compiled using file C0918 **

EMISSIONS TEST

STATION # 19 ENGINE# 2

5 Apr 1989 09:29:50

*** GAS CONCENTRATIONS ***

#	INSTRUMENT LABEL	VALUE	UNITS	#	INSTRUMENT LABEL	VALUE	UNITS
3	Outlet NO	188.4	ppm	4	Outlet NOX	244.2	ppm
5	Ambient NO	0	ppm	6	Ambient NOX	0	ppm
7	Inlet CO	0	ppm	8	Inlet CO2	0	%
9	Outlet CO	214.4	ppm	10	Outlet CO2	5.965	%
11	Inlet Total HC	0	ppm	12	Outlet Total HC	18340	ppm
13	Inlet O2	0	%	14	Outlet O2	10.1	%
15	Ambient O2	0	%				

*** ENGINE PARAMETERS ***

#	INSTRUMENT LABEL	VALUE	UNITS	#	INSTRUMENT LABEL	VALUE	UNITS
80	Engine Speed	886.8	RPM	26	Suction (S)	498.1	psig
81	Unused	0	RPM	27	Discharge (S)	792.4	psig
33	Barocel 1	0	InH20	28	Air Manifold	10.62	psig
34	Barocel 2	0	InH20	82	Unused	0	HZ
35	Barocel 3	-.2715		83	Unused	0	GPM

*** FUEL TUBE PARAMETERS ***

#	INSTRUMENT LABEL	VALUE	UNITS	#	INSTRUMENT LABEL	VALUE	UNITS
23	Fuel Press.(R)	67.96	psig	24	Fuel Temp.(R)(RTD)	67.98	Deg F
25	Fuel Diff.(R)	59.06	InH20				

*** TEMPERATURES ***

#	INSTRUMENT LABEL	VALUE	UNITS	#	INSTRUMENT LABEL	VALUE	UNITS
1	Suction Temp.(K)	0	Deg F	2	Discharge Temp.(K)	0	Deg
3	Exhaust Stack (K)	786	Deg F	4	Sample Filter (K)	242.1	Deg
5	After Pump (K)	231.5	Deg F	6	Ice Bath (K)	34.99	Deg
7	Unused	0	Deg F	8	Inlet Air (K)	64.06	Deg
9	Ambient (K)	70.1	Deg F	10	Unused	0	Deg
11	Unused	0	Deg F	12	Unused	0	Deg
13	Unused	0	Deg F	14	Unused	0	Deg
15	Unused	0	Deg F	16	Unused	0	Deg
17	Unused	0	Deg F	18	Suction(RTD)	66.22	Deg
19	Discharge(RTD)	148.5	Deg F				

Barometric Press. 29.88 InHg Specific Gravity .5992

*** SCANNING PERIOD IS 1 MINUTE(S) ***

COMMENTS: Fuel tube 3.068 in. diameter with a .6250 orifice
TOC UNIT #2 WHITE SUPERIOR
EMISSIONS COMPLIANCE TEST

** Concentrations and Parameters compiled using file C0918 **

EMISSIONS TEST

STATION # 19 ENGINE# 2

5 Apr 1989 09:31:04

*** GAS CONCENTRATIONS ***

#	INSTRUMENT LABEL	VALUE	UNITS	#	INSTRUMENT LABEL	VALUE	UNITS
3	Outlet NO	224.9	ppm	4	Outlet NOX	282.2	ppm
5	Ambient NO	0	ppm	6	Ambient NOX	0	ppm
7	Inlet CO	0	ppm	8	Inlet CO2	0	%
9	Outlet CO	215.7	ppm	10	Outlet CO2	6	%
11	Inlet Total HC	0	ppm	12	Outlet Total HC	18310	ppm
13	Inlet O2	0	%	14	Outlet O2	10.07	%
15	Ambient O2	0	%				

*** ENGINE PARAMETERS ***

#	INSTRUMENT LABEL	VALUE	UNITS	#	INSTRUMENT LABEL	VALUE	UNITS
80	Engine Speed	889.7	RPM	26	Suction (S)	497.9	psig
81	Unused	0	RPM	27	Discharge (S)	801	psig
33	Barocel 1	0	InH2O	28	Air Manifold	10.68	psig
34	Barocel 2	0	InH2O	82	Unused	0	HZ
35	Barocel 3	-.3028		83	Unused	0	GPM

*** FUEL TUBE PARAMETERS ***

#	INSTRUMENT LABEL	VALUE	UNITS	#	INSTRUMENT LABEL	VALUE	UNIT
23	Fuel Press.(R)	67.69	psig	24	Fuel Temp.(R)(RTD)	68.07	Deg
25	Fuel Diff.(R)	59.95	InH2O				

*** TEMPERATURES ***

#	INSTRUMENT LABEL	VALUE	UNITS	#	INSTRUMENT LABEL	VALUE	UNIT
1	Suction Temp.(K)	0	Deg F	2	Discharge Temp.(K)	0	Deg
3	Exhaust Stack (K)	785.3	Deg F	4	Sample Filter (K)	241.9	Deg
5	After Pump (K)	231.5	Deg F	6	Ice Bath (K)	35.15	Deg
7	Unused	0	Deg F	8	Inlet Air (K)	63.53	Deg
9	Ambient (K)	70.11	Deg F	10	Unused	0	Deg
11	Unused	0	Deg F	12	Unused	0	Deg
13	Unused	0	Deg F	14	Unused	0	Deg
15	Unused	0	Deg F	16	Unused	0	Deg
17	Unused	0	Deg F	18	Suction(RTD)	66.24	Deg
19	Discharge(RTD)	149.5	Deg F				

Barometric Press. 29.88 InHg Specific Gravity .5992

*** SCANNING PERIOD IS 1 MINUTE(S) ***

COMMENTS: Fuel tube 3.068 in. diameter with a .6250 orifice
TOC UNIT #2 WHITE SUPERIOR
EMISSIONS COMPLIANCE TEST
** Concentrations and Parameters compiled using file C0918 **

EMISSIONS TEST

STATION # 19 ENGINE# 2

5 Apr 1989 09:32:17

*** GAS CONCENTRATIONS ***

#	INSTRUMENT LABEL	VALUE	UNITS	#	INSTRUMENT LABEL	VALUE	UNITS
3	Outlet NO	224.9	ppm	4	Outlet NOX	282.8	ppm
5	Ambient NO	0	ppm	6	Ambient NOX	0	ppm
7	Inlet CO	0	ppm	8	Inlet CO2	0	%
9	Outlet CO	215.9	ppm	10	Outlet CO2	6.001	%
11	Inlet Total HC	0	ppm	12	Outlet Total HC	18350	ppm
13	Inlet O2	0	%	14	Outlet O2	10.05	%
15	Ambient O2	0	%				

*** ENGINE PARAMETERS ***

#	INSTRUMENT LABEL	VALUE	UNITS	#	INSTRUMENT LABEL	VALUE	UNITS
80	Engine Speed	889.5	RPM	26	Suction (S)	497.9	psig
81	Unused	0	RPM	27	Discharge (S)	803.6	psig
33	Barocel 1	0	InH2O	28	Air Manifold	10.67	psig
34	Barocel 2	0	InH2O	82	Unused	0	HZ
35	Barocel 3	-.634		83	Unused	0	GPM

*** FUEL TUBE PARAMETERS ***

#	INSTRUMENT LABEL	VALUE	UNITS	#	INSTRUMENT LABEL	VALUE	UNITS
23	Fuel Press.(R)	67.86	psig	24	Fuel Temp.(R)(RTD)	68.14	Deg
25	Fuel Diff.(R)	59.87	InH2O				

*** TEMPERATURES ***

#	INSTRUMENT LABEL	VALUE	UNITS	#	INSTRUMENT LABEL	VALUE	UNITS
1	Suction Temp.(K)	0	Deg F	2	Discharge Temp.(K)	0	Deg
3	Exhaust Stack (K)	784.7	Deg F	4	Sample Filter (K)	241.6	Deg
5	After Pump (K)	232.2	Deg F	6	Ice Bath (K)	35.07	Deg
7	Unused	0	Deg F	8	Inlet Air (K)	63.74	Deg
9	Ambient (K)	70.05	Deg F	10	Unused	0	Deg
11	Unused	0	Deg F	12	Unused	0	Deg
13	Unused	0	Deg F	14	Unused	0	Deg
15	Unused	0	Deg F	16	Unused	0	Deg
17	Unused	0	Deg F	18	Suction(RTD)	66.26	Deg
19	Discharge(RTD)	149.9	Deg F				

Barometric Press. 29.88 InHg Specific Gravity .5992

*** SCANNING PERIOD IS 1 MINUTE(S) ***

COMMENTS: Fuel tube 3.068 in. diameter with a .6250 orifice
TOC UNIT #2 WHITE SUPERIOR
EMISSIONS COMPLIANCE TEST

** Concentrations and Parameters compiled using file C0918 **

EMISSIONS TEST

STATION # 19 ENGINE# 2

5 Apr 1989 09:33:32

*** GAS CONCENTRATIONS ***

#	INSTRUMENT LABEL	VALUE	UNITS	#	INSTRUMENT LABEL	VALUE	UNITS
3	Outlet NO	231	ppm	4	Outlet NOX	288.3	ppm
5	Ambient NO	0	ppm	6	Ambient NOX	0	ppm
7	Inlet CO	0	ppm	8	Inlet CO2	0	%
9	Outlet CO	214.5	ppm	10	Outlet CO2	5.997	%
11	Inlet Total HC	0	ppm	12	Outlet Total HC	18490	ppm
13	Inlet O2	0	%	14	Outlet O2	10.05	%
15	Ambient O2	0	%				

*** ENGINE PARAMETERS ***

#	INSTRUMENT LABEL	VALUE	UNITS	#	INSTRUMENT LABEL	VALUE	UNIT
80	Engine Speed	889.6	RPM	26	Suction (S)	498.2	psig
81	Unused	0	RPM	27	Discharge (S)	803.2	psig
33	Barocel 1	0	InH2O	28	Air Manifold	10.71	psig
34	Barocel 2	0	InH2O	82	Unused	0	HZ
35	Barocel 3	-.6706		83	Unused	0	GPM

*** FUEL TUBE PARAMETERS ***

#	INSTRUMENT LABEL	VALUE	UNITS	#	INSTRUMENT LABEL	VALUE	UNIT
23	Fuel Press.(R)	68.09	psig	24	Fuel Temp.(R)(RTD)	68.26	Deg
25	Fuel Diff.(R)	59.66	InH2O				

*** TEMPERATURES ***

#	INSTRUMENT LABEL	VALUE	UNITS	#	INSTRUMENT LABEL	VALUE	UNIT
1	Suction Temp.(K)	0	Deg F	2	Discharge Temp.(K)	0	Deg
3	Exhaust Stack (K)	785.1	Deg F	4	Sample Filter (K)	241.1	Deg
5	After Pump (K)	231.4	Deg F	6	Ice Bath (K)	35.13	Deg
7	Unused	0	Deg F	8	Inlet Air (K)	64.52	Deg
9	Ambient (K)	70.56	Deg F	10	Unused	0	Deg
11	Unused	0	Deg F	12	Unused	0	Deg
13	Unused	0	Deg F	14	Unused	0	Deg
15	Unused	0	Deg F	16	Unused	0	Deg
17	Unused	0	Deg F	18	Suction(RTD)	66.28	Deg
19	Discharge(RTD)	150	Deg F				

Barometric Press. 29.88 InHg Specific Gravity .5992

*** SCANNING PERIOD IS 1 MINUTE(S) ***

COMMENTS: Fuel tube 3.068 in. diameter with a .6250 orifice
TOC UNIT #2 WHITE SUPERIOR
EMISSIONS COMPLIANCE TEST

** Concentrations and Parameters compiled using file C0918 **

EMISSIONS TEST

STATION # 19 ENGINE# 2 09:34:45

5 Apr 1989

*** GAS CONCENTRATIONS ***

#	INSTRUMENT LABEL	VALUE	UNITS	#	INSTRUMENT LABEL	VALUE	UNITS
3	Outlet NO	213	ppm	4	Outlet NOX	272.3	ppm
5	Ambient NO	0	ppm	6	Ambient NOX	0	ppm
7	Inlet CO	0	ppm	8	Inlet CO2	0	%
9	Outlet CO	213.9	ppm	10	Outlet CO2	5.982	%
11	Inlet Total HC	0	ppm	12	Outlet Total HC	18550	ppm
13	Inlet O2	0	%	14	Outlet O2	10.07	%
15	Ambient O2	0	%				

*** ENGINE PARAMETERS ***

#	INSTRUMENT LABEL	VALUE	UNITS	#	INSTRUMENT LABEL	VALUE	UNITS
80	Engine Speed	891.3	RPM	26	Suction (S)	498.1	psig
81	Unused	0	RPM	27	Discharge (S)	801.8	psig
33	Barocel 1	0	InH20	28	Air Manifold	10.71	psig
34	Barocel 2	0	InH20	82	Unused	0	HZ
35	Barocel 3	-.05929		83	Unused	0	GPM

*** FUEL TUBE PARAMETERS ***

#	INSTRUMENT LABEL	VALUE	UNITS	#	INSTRUMENT LABEL	VALUE	UNITS
23	Fuel Press.(R)	68.06	psig	24	Fuel Temp.(R)(RTD)	68.37	Deg F
25	Fuel Diff.(R)	59.82	InH20				

*** TEMPERATURES ***

#	INSTRUMENT LABEL	VALUE	UNITS	#	INSTRUMENT LABEL	VALUE	UNITS
1	Suction Temp.(K)	0	Deg F	2	Discharge Temp.(K)	0	Deg F
3	Exhaust Stack (K)	785.6	Deg F	4	Sample Filter (K)	240.6	Deg F
5	After Pump (K)	230.7	Deg F	6	Ice Bath (K)	35.14	Deg F
7	Unused	0	Deg F	8	Inlet Air (K)	64.37	Deg F
9	Ambient (K)	69.77	Deg F	10	Unused	0	Deg F
11	Unused	0	Deg F	12	Unused	0	Deg F
13	Unused	0	Deg F	14	Unused	0	Deg F
15	Unused	0	Deg F	16	Unused	0	Deg F
17	Unused	0	Deg F	18	Suction(RTD)	66.3	Deg F
19	Discharge(RTD)	150.1	Deg F				

Barometric Press. 29.88 InHg Specific Gravity .5992

*** SCANNING PERIOD IS 1 MINUTE(S) ***

COMMENTS: Fuel tube 3.068 in. diameter with a .6250 orifice
TOC UNIT #2 WHITE SUPERIOR
EMISSIONS COMPLIANCE TEST
** Concentrations and Parameters compiled using file C0918 **

EMISSIONS TEST

STATION # 19 ENGINE# 2

5 Apr 1989 09:35:58

*** GAS CONCENTRATIONS ***

#	INSTRUMENT LABEL	VALUE	UNITS	#	INSTRUMENT LABEL	VALUE	UNITS
3	Outlet NO	216.4	ppm	4	Outlet NOX	273.5	ppm
5	Ambient NO	0	ppm	6	Ambient NOX	0	ppm
7	Inlet CO	0	ppm	8	Inlet CO2	0	%
9	Outlet CO	214.1	ppm	10	Outlet CO2	5.984	%
11	Inlet Total HC	0	ppm	12	Outlet Total HC	18480	ppm
13	Inlet O2	0	%	14	Outlet O2	10.09	%
15	Ambient O2	0	%				

*** ENGINE PARAMETERS ***

#	INSTRUMENT LABEL	VALUE	UNITS	#	INSTRUMENT LABEL	VALUE	UNITS
80	Engine Speed	887.6	RPM	26	Suction (S)	498.4	psig
81	Unused	0	RPM	27	Discharge (S)	801.4	psig
33	Barocel 1	0	InH2O	28	Air Manifold	10.71	psig
34	Barocel 2	0	InH2O	82	Unused	0	HZ
35	Barocel 3	-1.183		83	Unused	0	GPM

*** FUEL TUBE PARAMETERS ***

#	INSTRUMENT LABEL	VALUE	UNITS	#	INSTRUMENT LABEL	VALUE	UNITS
23	Fuel Press.(R)	67.91	psig	24	Fuel Temp.(R)(RTD)	68.47	Deg F
25	Fuel Diff.(R)	59.92	InH2O				

*** TEMPERATURES ***

#	INSTRUMENT LABEL	VALUE	UNITS	#	INSTRUMENT LABEL	VALUE	UNITS
1	Suction Temp.(K)	0	Deg F	2	Discharge Temp.(K)	0	Deg F
3	Exhaust Stack (K)	784.7	Deg F	4	Sample Filter (K)	240.4	Deg F
5	After Pump (K)	228	Deg F	6	Ice Bath (K)	35.19	Deg F
7	Unused	0	Deg F	8	Inlet Air (K)	64.48	Deg F
9	Ambient (K)	69.37	Deg F	10	Unused	0	Deg F
11	Unused	0	Deg F	12	Unused	0	Deg F
13	Unused	0	Deg F	14	Unused	0	Deg F
15	Unused	0	Deg F	16	Unused	0	Deg F
17	Unused	0	Deg F	18	Suction(RTD)	66.32	Deg F
19	Discharge(RTD)	150	Deg F				

Barometric Press. 29.88 InHg Specific Gravity .5992

*** SCANNING PERIOD IS 1 MINUTE(S) ***

COMMENTS: Fuel tube 3.068 in. diameter with a .6250 orifice
TOC UNIT #2 WHITE SUPERIOR
EMISSIONS COMPLIANCE TEST

** Concentrations and Parameters compiled using file C0918 **

EMISSIONS TEST

STATION # 19 ENGINE# 2

5 Apr 1989 09:37:12

*** GAS CONCENTRATIONS ***

#	INSTRUMENT LABEL	VALUE	UNITS	#	INSTRUMENT LABEL	VALUE	UNITS
3	Outlet NO	207.7	ppm	4	Outlet NOX	266.5	ppm
5	Ambient NO	0	ppm	6	Ambient NOX	0	ppm
7	Inlet CO	0	ppm	8	Inlet CO2	0	%
9	Outlet CO	210.9	ppm	10	Outlet CO2	5.996	%
11	Inlet Total HC	0	ppm	12	Outlet Total HC	18390	ppm
13	Inlet O2	0	%	14	Outlet O2	10.07	%
15	Ambient O2	0	%				

*** ENGINE PARAMETERS ***

#	INSTRUMENT LABEL	VALUE	UNITS	#	INSTRUMENT LABEL	VALUE	UNITS
80	Engine Speed	889.3	RPM	26	Suction (S)	500.2	psig
81	Unused	0	RPM	27	Discharge (S)	797.7	psig
33	Barocel 1	0	InH2O	28	Air Manifold	10.71	psig
34	Barocel 2	0	InH2O	82	Unused	0	HZ
35	Barocel 3	.265		83	Unused	0	GPM

*** FUEL TUBE PARAMETERS ***

#	INSTRUMENT LABEL	VALUE	UNITS	#	INSTRUMENT LABEL	VALUE	UNITS
23	Fuel Press.(R)	69.33	psig	24	Fuel Temp.(R)(RTD)	68.59	Deg F
25	Fuel Diff.(R)	58.63	InH2O				

*** TEMPERATURES ***

#	INSTRUMENT LABEL	VALUE	UNITS	#	INSTRUMENT LABEL	VALUE	UNITS
1	Suction Temp.(K)	0	Deg F	2	Discharge Temp.(K)	0	Deg F
3	Exhaust Stack (K)	784.6	Deg F	4	Sample Filter (K)	240.2	Deg F
5	After Pump (K)	225.6	Deg F	6	Ice Bath (K)	35.18	Deg F
7	Unused	0	Deg F	8	Inlet Air (K)	64.29	Deg F
9	Ambient (K)	69.17	Deg F	10	Unused	0	Deg F
11	Unused	0	Deg F	12	Unused	0	Deg F
13	Unused	0	Deg F	14	Unused	0	Deg F
15	Unused	0	Deg F	16	Unused	0	Deg F
17	Unused	0	Deg F	18	Suction(RTD)	66.39	Deg F
19	Discharge(RTD)	149.6	Deg F				

Barometric Press. 29.88 InHg Specific Gravity .5992

*** SCANNING PERIOD IS 1 MINUTE(S) ***

COMMENTS: Fuel tube 3.068 in. diameter with a .6250 orifice
TOC UNIT #2 WHITE SUPERIOR
EMISSIONS COMPLIANCE TEST
** Concentrations and Parameters compiled using file C0918 **

EMISSIONS TEST

STATION # 19 ENGINE# 2

09:38:26

5 Apr 1989

*** GAS CONCENTRATIONS ***

#	INSTRUMENT LABEL	VALUE	UNITS	#	INSTRUMENT LABEL	VALUE	UNITS
3	Outlet NO	188.9	ppm	4	Outlet NOX	243.2	ppm
5	Ambient NO	0	ppm	6	Ambient NOX	0	ppm
7	Inlet CO	0	ppm	8	Inlet CO2	0	%
9	Outlet CO	213.8	ppm	10	Outlet CO2	5.977	%
11	Inlet Total HC	0	ppm	12	Outlet Total HC	18610	ppm
13	Inlet O2	0	%	14	Outlet O2	10.13	%
15	Ambient O2	0	%				

*** ENGINE PARAMETERS ***

#	INSTRUMENT LABEL	VALUE	UNITS	#	INSTRUMENT LABEL	VALUE	UNITS
80	Engine Speed	889.4	RPM	26	Suction (S)	501.3	psig
81	Unused	0	RPM	27	Discharge (S)	795.5	psig
33	Barocel 1	0	InH2O	28	Air Manifold	10.75	psig
34	Barocel 2	0	InH2O	82	Unused	0	HZ
35	Barocel 3	-.4152		83	Unused	0	GPM

*** FUEL TUBE PARAMETERS ***

#	INSTRUMENT LABEL	VALUE	UNITS	#	INSTRUMENT LABEL	VALUE	UNITS
23	Fuel Press.(R)	69.42	psig	24	Fuel Temp.(R)(RTD)	68.68	Deg F
25	Fuel Diff.(R)	58.59	InH2O				

*** TEMPERATURES ***

#	INSTRUMENT LABEL	VALUE	UNITS	#	INSTRUMENT LABEL	VALUE	UNITS
1	Suction Temp.(K)	0	Deg F	2	Discharge Temp.(K)	0	Deg F
3	Exhaust Stack (K)	784.9	Deg F	4	Sample Filter (K)	240.1	Deg F
5	After Pump (K)	223	Deg F	6	Ice Bath (K)	35.19	Deg F
7	Unused	0	Deg F	8	Inlet Air (K)	64.24	Deg F
9	Ambient (K)	68.76	Deg F	10	Unused	0	Deg F
11	Unused	0	Deg F	12	Unused	0	Deg F
13	Unused	0	Deg F	14	Unused	0	Deg F
15	Unused	0	Deg F	16	Unused	0	Deg F
17	Unused	0	Deg F	18	Suction(RTD)	66.44	Deg F
19	Discharge(RTD)	148.9	Deg F				

Barometric Press. 29.88 InHg Specific Gravity .5992

*** SCANNING PERIOD IS 1 MINUTE(S) ***

COMMENTS: Fuel tube 3.068 in. diameter with a .6250 orifice
TOC UNIT #2 WHITE SUPERIOR
EMISSIONS COMPLIANCE TEST

** Concentrations and Parameters compiled using file C0918 **

EMISSIONS TEST

STATION # 19 ENGINE# 2

5 Apr 1989 09:39:39

*** GAS CONCENTRATIONS ***

#	INSTRUMENT LABEL	VALUE	UNITS	#	INSTRUMENT LABEL	VALUE	UNITS
3	Outlet NO	178.9	ppm	4	Outlet NOX	234.6	ppm
5	Ambient NO	0	ppm	6	Ambient NOX	0	ppm
7	Inlet CO	0	ppm	8	Inlet CO2	0	%
9	Outlet CO	212.6	ppm	10	Outlet CO2	5.97	%
11	Inlet Total HC	0	ppm	12	Outlet Total HC	18440	ppm
13	Inlet O2	0	%	14	Outlet O2	10.11	%
15	Ambient O2	0	%				

*** ENGINE PARAMETERS ***

#	INSTRUMENT LABEL	VALUE	UNITS	#	INSTRUMENT LABEL	VALUE	UNITS
80	Engine Speed	885.5	RPM	26	Suction (S)	502	psig
81	Unused	0	RPM	27	Discharge (S)	792.7	psig
33	Barocel 1	0	InH2O	28	Air Manifold	10.72	psig
34	Barocel 2	0	InH2O	82	Unused	0	HZ
35	Barocel 3	-.59		83	Unused	0	GPM

*** FUEL TUBE PARAMETERS ***

#	INSTRUMENT LABEL	VALUE	UNITS	#	INSTRUMENT LABEL	VALUE	UNITS
23	Fuel Press.(R)	70.28	psig	24	Fuel Temp.(R)(RTD)	68.8	Deg F
25	Fuel Diff.(R)	57.45	InH2O				

*** TEMPERATURES ***

#	INSTRUMENT LABEL	VALUE	UNITS	#	INSTRUMENT LABEL	VALUE	UNITS
1	Suction Temp.(K)	0	Deg F	2	Discharge Temp.(K)	0	Deg F
3	Exhaust Stack (K)	784.7	Deg F	4	Sample Filter (K)	239.8	Deg F
5	After Pump (K)	220.8	Deg F	6	Ice Bath (K)	35.28	Deg F
7	Unused	0	Deg F	8	Inlet Air (K)	65.62	Deg F
9	Ambient (K)	68.56	Deg F	10	Unused	0	Deg F
11	Unused	0	Deg F	12	Unused	0	Deg F
13	Unused	0	Deg F	14	Unused	0	Deg F
15	Unused	0	Deg F	16	Unused	0	Deg F
17	Unused	0	Deg F	18	Suction(RTD)	66.53	Deg F
19	Discharge(RTD)	148.2	Deg F				

Barometric Press. 29.88 InHg Specific Gravity .5992

*** SCANNING PERIOD IS 1 MINUTE(S) ***

COMMENTS: Fuel tube 3.068 in. diameter with a .6250 orifice
TOC UNIT #2 WHITE SUPERIOR
EMISSIONS COMPLIANCE TEST

** Concentrations and Parameters compiled using file C0918 **

Rich. #2

EMISSIONS TEST

STATION # 19 ENGINE# 2

5 Apr 1989 09:50:34

*** GAS CONCENTRATIONS ***

#	INSTRUMENT LABEL	VALUE	UNITS	#	INSTRUMENT LABEL	VALUE	UNITS
3	Outlet NO	22.53	ppm	4	Outlet NOX	62.42	ppm
5	Ambient NO	0	ppm	6	Ambient NOX	0	ppm
7	Inlet CO	0	ppm	8	Inlet CO2	0	%
9	Outlet CO	251	ppm	10	Outlet CO2	5.258	%
11	Inlet Total HC	0	ppm	12	Outlet Total HC	25490	ppm
13	Inlet O2	0	%	14	Outlet O2	11.34	%
15	Ambient O2	0	%				

*** ENGINE PARAMETERS ***

#	INSTRUMENT LABEL	VALUE	UNITS	#	INSTRUMENT LABEL	VALUE	UNITS
80	Engine Speed	805.7	RPM	26	Suction (S)	520	psig
81	Unused	0	RPM	27	Discharge (S)	757.3	psig
33	Barocel 1	0	InH2O	28	Air Manifold	9.834	psig
34	Barocel 2	0	InH2O	82	Unused	0	HZ
35	Barocel 3	-.2911		83	Unused	0	GPM

*** FUEL TUBE PARAMETERS ***

#	INSTRUMENT LABEL	VALUE	UNITS	#	INSTRUMENT LABEL	VALUE	UNITS
23	Fuel Press.(R)	74.94	psig	24	Fuel Temp.(R)(RTD)	70.02	Deg F
25	Fuel Diff.(R)	41.36	InH2O				

*** TEMPERATURES ***

#	INSTRUMENT LABEL	VALUE	UNITS	#	INSTRUMENT LABEL	VALUE	UNITS
1	Suction Temp.(K)	0	Deg F	2	Discharge Temp.(K)	0	Deg F
3	Exhaust Stack (K)	747.9	Deg F	4	Sample Filter (K)	237.7	Deg F
5	After Pump (K)	208.8	Deg F	6	Ice Bath (K)	35.37	Deg F
7	Unused	0	Deg F	8	Inlet Air (K)	66.35	Deg F
9	Ambient (K)	66.39	Deg F	10	Unused	0	Deg F
11	Unused	0	Deg F	12	Unused	0	Deg F
13	Unused	0	Deg F	14	Unused	0	Deg F
15	Unused	0	Deg F	16	Unused	0	Deg F
17	Unused	0	Deg F	18	Suction(RTD)	67.62	Deg F
19	Discharge(RTD)	134.7	Deg F				

Barometric Press. 29.88 InHg Specific Gravity .5992

*** SCANNING PERIOD IS 1 MINUTE(S) ***

COMMENTS: Fuel tube 3.068 in. diameter with a .6250 orifice
TOC UNIT #2 WHITE SUPERIOR
EMISSIONS COMPLIANCE TEST

** Concentrations and Parameters compiled using file C0918 **

EMISSIONS TEST

STATION # 19 ENGINE# 2 09:51:49

5 Apr 1989

*** GAS CONCENTRATIONS ***

#	INSTRUMENT LABEL	VALUE	UNITS	#	INSTRUMENT LABEL	VALUE	UNITS
3	Outlet NO	31.41	ppm	4	Outlet NOX	73.32	ppm
5	Ambient NO	0	ppm	6	Ambient NOX	0	ppm
7	Inlet CO	0	ppm	8	Inlet CO2	0	%
9	Outlet CO	240.5	ppm	10	Outlet CO2	5.292	%
11	Inlet Total HC	0	ppm	12	Outlet Total HC	25040	ppm
13	Inlet O2	0	%	14	Outlet O2	11.3	%
15	Ambient O2	0	%				

*** ENGINE PARAMETERS ***

#	INSTRUMENT LABEL	VALUE	UNITS	#	INSTRUMENT LABEL	VALUE	UNITS
80	Engine Speed	802.6	RPM	26	Suction (S)	519.7	psig
81	Unused	0	RPM	27	Discharge (S)	764.6	psig
33	Barocel 1	0	InH2O	28	Air Manifold	9.804	psig
34	Barocel 2	0	InH2O	82	Unused	0	HZ
35	Barocel 3	.1122		83	Unused	0	GPM

*** FUEL TUBE PARAMETERS ***

#	INSTRUMENT LABEL	VALUE	UNITS	#	INSTRUMENT LABEL	VALUE	UNITS
23	Fuel Press.(R)	74.88	psig	24	Fuel Temp.(R)(RTD)	70.12	Deg F
25	Fuel Diff.(R)	41.66	InH2O				

*** TEMPERATURES ***

#	INSTRUMENT LABEL	VALUE	UNITS	#	INSTRUMENT LABEL	VALUE	UNITS
1	Suction Temp.(K)	0	Deg F	2	Discharge Temp.(K)	0	Deg F
3	Exhaust Stack (K)	746.5	Deg F	4	Sample Filter (K)	237.6	Deg F
5	After Pump (K)	208.3	Deg F	6	Ice Bath (K)	35.32	Deg F
7	Unused	0	Deg F	8	Inlet Air (K)	66.59	Deg F
9	Ambient (K)	66.2	Deg F	10	Unused	0	Deg F
11	Unused	0	Deg F	12	Unused	0	Deg F
13	Unused	0	Deg F	14	Unused	0	Deg F
15	Unused	0	Deg F	16	Unused	0	Deg F
17	Unused	0	Deg F	18	Suction(RTD)	67.71	Deg F
19	Discharge(RTD)	135.9	Deg F				

Barometric Press. 29.88 InHg Specific Gravity .5992

*** SCANNING PERIOD IS 1 MINUTE(S) ***

COMMENTS: Fuel tube 3.068 in. diameter with a .6250 orifice
TOC UNIT #2 WHITE SUPERIOR
EMISSIONS COMPLIANCE TEST

** Concentrations and Parameters compiled using file C0918 **

EMISSIONS TEST

STATION # 19 ENGINE# 2 09:53:03

5 Apr 1989

*** GAS CONCENTRATIONS ***

#	INSTRUMENT LABEL	VALUE	UNITS	#	INSTRUMENT LABEL	VALUE	UNITS
3	Outlet NO	45	ppm	4	Outlet NOX	89.63	ppm
5	Ambient NO	0	ppm	6	Ambient NOX	0	ppm
7	Inlet CO	0	ppm	8	Inlet CO2	0	%
9	Outlet CO	230	ppm	10	Outlet CO2	5.339	%
11	Inlet Total HC	0	ppm	12	Outlet Total HC	24070	ppm
13	Inlet O2	0	%	14	Outlet O2	11.19	%
15	Ambient O2	0	%				

*** ENGINE PARAMETERS ***

#	INSTRUMENT LABEL	VALUE	UNITS	#	INSTRUMENT LABEL	VALUE	UNITS
80	Engine Speed	802.6	RPM	26	Suction (S)	519.5	psig
81	Unused	0	RPM	27	Discharge (S)	781.4	psig
33	Barocel 1	0	InH2O	28	Air Manifold	9.818	psig
34	Barocel 2	0	InH2O	82	Unused	0	HZ
35	Barocel 3	-.3328		83	Unused	0	GPM

*** FUEL TUBE PARAMETERS ***

#	INSTRUMENT LABEL	VALUE	UNITS	#	INSTRUMENT LABEL	VALUE	UNITS
23	Fuel Press.(R)	74.21	psig	24	Fuel Temp.(R)(RTD)	70.21	Deg F
25	Fuel Diff.(R)	42.6	InH2O				

*** TEMPERATURES ***

#	INSTRUMENT LABEL	VALUE	UNITS	#	INSTRUMENT LABEL	VALUE	UNITS
1	Suction Temp.(K)	0	Deg F	2	Discharge Temp.(K)	0	Deg F
3	Exhaust Stack (K)	746	Deg F	4	Sample Filter (K)	237.6	Deg F
5	After Pump (K)	207.4	Deg F	6	Ice Bath (K)	35.39	Deg F
7	Unused	0	Deg F	8	Inlet Air (K)	66.62	Deg F
9	Ambient (K)	66.48	Deg F	10	Unused	0	Deg F
11	Unused	0	Deg F	12	Unused	0	Deg F
13	Unused	0	Deg F	14	Unused	0	Deg F
15	Unused	0	Deg F	16	Unused	0	Deg F
17	Unused	0	Deg F	18	Suction(RTD)	67.81	Deg F
19	Discharge(RTD)	138.3	Deg F				

Barometric Press. 29.88 InHg Specific Gravity .5992

*** SCANNING PERIOD IS 1 MINUTE(S) ***

COMMENTS: Fuel tube 3.068 in. diameter with a .6250 orifice
TOC UNIT #2 WHITE SUPERIOR
EMISSIONS COMPLIANCE TEST

** Concentrations and Parameters compiled using file C0918 **

EMISSIONS TEST

STATION # 19 ENGINE# 2 09:54:16

5 Apr 1989

*** GAS CONCENTRATIONS ***

#	INSTRUMENT LABEL	VALUE	UNITS	#	INSTRUMENT LABEL	VALUE	UNITS
3	Outlet NO	57.83	ppm	4	Outlet NOX	102.7	ppm
5	Ambient NO	0	ppm	6	Ambient NOX	0	ppm
7	Inlet CO	0	ppm	8	Inlet CO2	0	%
9	Outlet CO	217.8	ppm	10	Outlet CO2	5.386	%
11	Inlet Total HC	0	ppm	12	Outlet Total HC	23090	ppm
13	Inlet O2	0	%	14	Outlet O2	11.11	%
15	Ambient O2	0	%				

*** ENGINE PARAMETERS ***

#	INSTRUMENT LABEL	VALUE	UNITS	#	INSTRUMENT LABEL	VALUE	UNITS
80	Engine Speed	805.1	RPM	26	Suction (S)	520.9	psig
81	Unused	0	RPM	27	Discharge (S)	791.3	psig
33	Barocel 1	0	InH20	28	Air Manifold	9.831	psig
34	Barocel 2	0	InH20	82	Unused	0	HZ
35	Barocel 3	-.1004		83	Unused	0	GPM

*** FUEL TUBE PARAMETERS ***

#	INSTRUMENT LABEL	VALUE	UNITS	#	INSTRUMENT LABEL	VALUE	UNITS
23	Fuel Press.(R)	74.02	psig	24	Fuel Temp.(R)(RTD)	70.32	Deg F
25	Fuel Diff.(R)	42.98	InH20				

*** TEMPERATURES ***

#	INSTRUMENT LABEL	VALUE	UNITS	#	INSTRUMENT LABEL	VALUE	UNITS
1	Suction Temp.(K)	0	Deg F	2	Discharge Temp.(K)	0	Deg F
3	Exhaust Stack (K)	746.1	Deg F	4	Sample Filter (K)	237.1	Deg F
5	After Pump (K)	207.2	Deg F	6	Ice Bath (K)	35.41	Deg F
7	Unused	0	Deg F	8	Inlet Air (K)	66.89	Deg F
9	Ambient (K)	66.61	Deg F	10	Unused	0	Deg F
11	Unused	0	Deg F	12	Unused	0	Deg F
13	Unused	0	Deg F	14	Unused	0	Deg F
15	Unused	0	Deg F	16	Unused	0	Deg F
17	Unused	0	Deg F	18	Suction(RTD)	67.9	Deg F
19	Discharge(RTD)	140.5	Deg F				

Barometric Press. 29.88 InHg Specific Gravity .5992

*** SCANNING PERIOD IS 1 MINUTE(S) ***

COMMENTS: Fuel tube 3.068 in. diameter with a .6250 orifice
TOC UNIT #2 WHITE SUPERIOR
EMISSIONS COMPLIANCE TEST
** Concentrations and Parameters compiled using file C0918 **

EMISSIONS TEST

STATION # 19 ENGINE# 2 09:55:29

5 Apr 1989

*** GAS CONCENTRATIONS ***

#	INSTRUMENT LABEL	VALUE	UNITS	#	INSTRUMENT LABEL	VALUE	UNITS
3	Outlet NO	72.47	ppm	4	Outlet NOX	117.3	ppm
5	Ambient NO	0	ppm	6	Ambient NOX	0	ppm
7	Inlet CO	0	ppm	8	Inlet CO2	0	%
9	Outlet CO	214.8	ppm	10	Outlet CO2	5.4	%
11	Inlet Total HC	0	ppm	12	Outlet Total HC	23550	ppm
13	Inlet O2	0	%	14	Outlet O2	11.04	%
15	Ambient O2	0	%				

*** ENGINE PARAMETERS ***

#	INSTRUMENT LABEL	VALUE	UNITS	#	INSTRUMENT LABEL	VALUE	UNITS
80	Engine Speed	803.2	RPM	26	Suction (S)	519.1	psig
81	Unused	0	RPM	27	Discharge (S)	790.3	psig
33	Barocel 1	0	InH20	28	Air Manifold	9.689	psig
34	Barocel 2	0	InH20	82	Unused	0	HZ
35	Barocel 3	-.1383		83	Unused	0	GPM

*** FUEL TUBE PARAMETERS ***

#	INSTRUMENT LABEL	VALUE	UNITS	#	INSTRUMENT LABEL	VALUE	UNITS
23	Fuel Press.(R)	74.22	psig	24	Fuel Temp.(R)(RTD)	70.47	Deg F
25	Fuel Diff.(R)	42.7	InH20				

*** TEMPERATURES ***

#	INSTRUMENT LABEL	VALUE	UNITS	#	INSTRUMENT LABEL	VALUE	UNITS
1	Suction Temp.(K)	0	Deg F	2	Discharge Temp.(K)	0	Deg F
3	Exhaust Stack (K)	745.3	Deg F	4	Sample Filter (K)	237.1	Deg F
5	After Pump (K)	208.2	Deg F	6	Ice Bath (K)	35.43	Deg F
7	Unused	0	Deg F	8	Inlet Air (K)	68.2	Deg F
9	Ambient (K)	66.81	Deg F	10	Unused	0	Deg F
11	Unused	0	Deg F	12	Unused	0	Deg F
13	Unused	0	Deg F	14	Unused	0	Deg F
15	Unused	0	Deg F	16	Unused	0	Deg F
17	Unused	0	Deg F	18	Suction(RTD)	67.98	Deg F
19	Discharge(RTD)	141.2	Deg F				

Barometric Press. 29.88 InHg Specific Gravity .5992

*** SCANNING PERIOD IS 1 MINUTE(S) ***

COMMENTS: Fuel tube 3.068 in. diameter with a .6250 orifice
TOC UNIT #2 WHITE SUPERIOR
EMISSIONS COMPLIANCE TEST
** Concentrations and Parameters compiled using file C0918 **

EMISSIONS TEST

STATION # 19 ENGINE# 2

5 Apr 1989 09:56:47

*** GAS CONCENTRATIONS ***

#	INSTRUMENT LABEL	VALUE	UNITS	#	INSTRUMENT LABEL	VALUE	UNITS
3	Outlet NO	66.79	ppm	4	Outlet NOX	112.5	ppm
5	Ambient NO	0	ppm	6	Ambient NOX	0	ppm
7	Inlet CO	0	ppm	8	Inlet CO2	0	%
9	Outlet CO	210.5	ppm	10	Outlet CO2	5.403	%
11	Inlet Total HC	0	ppm	12	Outlet Total HC	22980	ppm
13	Inlet O2	0	%	14	Outlet O2	11.05	%
15	Ambient O2	0	%				

*** ENGINE PARAMETERS ***

#	INSTRUMENT LABEL	VALUE	UNITS	#	INSTRUMENT LABEL	VALUE	UNITS
80	Engine Speed	802.1	RPM	26	Suction (S)	520.2	psig
81	Unused	0	RPM	27	Discharge (S)	790.7	psig
33	Barocel 1	0	InH2O	28	Air Manifold	9.78	psig
34	Barocel 2	0	InH2O	82	Unused	0	HZ
35	Barocel 3	-.1892		83	Unused	0	GPM

*** FUEL TUBE PARAMETERS ***

#	INSTRUMENT LABEL	VALUE	UNITS	#	INSTRUMENT LABEL	VALUE	UNITS
23	Fuel Press.(R)	74.34	psig	24	Fuel Temp.(R)(RTD)	70.62	Deg F
25	Fuel Diff.(R)	43.05	InH2O				

*** TEMPERATURES ***

#	INSTRUMENT LABEL	VALUE	UNITS	#	INSTRUMENT LABEL	VALUE	UNITS
1	Suction Temp.(K)	0	Deg F	2	Discharge Temp.(K)	0	Deg F
3	Exhaust Stack (K)	745.5	Deg F	4	Sample Filter (K)	236.7	Deg F
5	After Pump (K)	209.1	Deg F	6	Ice Bath (K)	35.36	Deg F
7	Unused	0	Deg F	8	Inlet Air (K)	68.79	Deg F
9	Ambient (K)	66.69	Deg F	10	Unused	0	Deg F
11	Unused	0	Deg F	12	Unused	0	Deg F
13	Unused	0	Deg F	14	Unused	0	Deg F
15	Unused	0	Deg F	16	Unused	0	Deg F
17	Unused	0	Deg F	18	Suction(RTD)	68.04	Deg F
19	Discharge(RTD)	141.5	Deg F				

Barometric Press. 29.88 InHg Specific Gravity .5992

*** SCANNING PERIOD IS 1 MINUTE(S) ***

COMMENTS: Fuel tube 3.068 in. diameter with a .6250 orifice
TOC UNIT #2 WHITE SUPERIOR
EMISSIONS COMPLIANCE TEST

** Concentrations and Parameters compiled using file C0918 **

EMISSIONS TEST

STATION # 19 ENGINE# 2 09:58:00

5 Apr 1989

*** GAS CONCENTRATIONS ***

#	INSTRUMENT LABEL	VALUE	UNITS	#	INSTRUMENT LABEL	VALUE	UNITS
3	Outlet NO	66.81	ppm	4	Outlet NOX	112.4	ppm
5	Ambient NO	0	ppm	6	Ambient NOX	0	ppm
7	Inlet CO	0	ppm	8	Inlet CO2	0	%
9	Outlet CO	210.7	ppm	10	Outlet CO2	5.404	%
11	Inlet Total HC	0	ppm	12	Outlet Total HC	23130	ppm
13	Inlet O2	0	%	14	Outlet O2	11.04	%
15	Ambient O2	0	%				

*** ENGINE PARAMETERS ***

#	INSTRUMENT LABEL	VALUE	UNITS	#	INSTRUMENT LABEL	VALUE	UNITS
80	Engine Speed	802	RPM	26	Suction (S)	520.9	psig
81	Unused	0	RPM	27	Discharge (S)	791.8	psig
33	Barocel 1	0	InH2O	28	Air Manifold	9.768	psig
34	Barocel 2	0	InH2O	82	Unused	0	HZ
35	Barocel 3	-.7119		83	Unused	0	GPM

*** FUEL TUBE PARAMETERS ***

#	INSTRUMENT LABEL	VALUE	UNITS	#	INSTRUMENT LABEL	VALUE	UNITS
23	Fuel Press.(R)	74.51	psig	24	Fuel Temp.(R)(RTD)	70.82	Deg F
25	Fuel Diff.(R)	42.83	InH2O				

*** TEMPERATURES ***

#	INSTRUMENT LABEL	VALUE	UNITS	#	INSTRUMENT LABEL	VALUE	UNITS
1	Suction Temp.(K)	0	Deg F	2	Discharge Temp.(K)	0	Deg F
3	Exhaust Stack (K)	745.5	Deg F	4	Sample Filter (K)	236.1	Deg F
5	After Pump (K)	211.4	Deg F	6	Ice Bath (K)	35.36	Deg F
7	Unused	0	Deg F	8	Inlet Air (K)	68.97	Deg F
9	Ambient (K)	66.94	Deg F	10	Unused	0	Deg F
11	Unused	0	Deg F	12	Unused	0	Deg F
13	Unused	0	Deg F	14	Unused	0	Deg F
15	Unused	0	Deg F	16	Unused	0	Deg F
17	Unused	0	Deg F	18	Suction(RTD)	68.11	Deg F
19	Discharge(RTD)	141.6	Deg F				

Barometric Press. 29.88 InHg Specific Gravity .5992

*** SCANNING PERIOD IS 1 MINUTE(S) ***

COMMENTS: Fuel tube 3.068 in. diameter with a .6250 orifice
TOC UNIT #2 WHITE SUPERIOR
EMISSIONS COMPLIANCE TEST

** Concentrations and Parameters compiled using file C0918 **

EMISSIONS TEST

STATION # 19 ENGINE# 2

5 Apr 1989 09:59:15

*** GAS CONCENTRATIONS ***

#	INSTRUMENT LABEL	VALUE	UNITS	#	INSTRUMENT LABEL	VALUE	UNITS
3	Outlet NO	68.69	ppm	4	Outlet NOX	113.4	ppm
5	Ambient NO	0	ppm	6	Ambient NOX	0	ppm
7	Inlet CO	0	ppm	8	Inlet CO2	0	%
9	Outlet CO	216.2	ppm	10	Outlet CO2	5.392	%
11	Inlet Total HC	0	ppm	12	Outlet Total HC	23190	ppm
13	Inlet O2	0	%	14	Outlet O2	11.05	%
15	Ambient O2	0	%				

*** ENGINE PARAMETERS ***

#	INSTRUMENT LABEL	VALUE	UNITS	#	INSTRUMENT LABEL	VALUE	UNITS
80	Engine Speed	801.2	RPM	26	Suction (S)	520.1	psig
81	Unused	0	RPM	27	Discharge (S)	789.2	psig
33	Barocel 1	0	InH2O	28	Air Manifold	9.776	psig
34	Barocel 2	0	InH2O	82	Unused	0	HZ
35	Barocel 3	-.4496		83	Unused	0	GPM

*** FUEL TUBE PARAMETERS ***

#	INSTRUMENT LABEL	VALUE	UNITS	#	INSTRUMENT LABEL	VALUE	UNITS
23	Fuel Press.(R)	74.62	psig	24	Fuel Temp.(R)(RTD)	71	Deg F
25	Fuel Diff.(R)	42.87	InH2O				

*** TEMPERATURES ***

#	INSTRUMENT LABEL	VALUE	UNITS	#	INSTRUMENT LABEL	VALUE	UNITS
1	Suction Temp.(K)	0	Deg F	2	Discharge Temp.(K)	0	Deg F
3	Exhaust Stack (K)	746.6	Deg F	4	Sample Filter (K)	235.9	Deg F
5	After Pump (K)	211.7	Deg F	6	Ice Bath (K)	35.43	Deg F
7	Unused	0	Deg F	8	Inlet Air (K)	69.39	Deg F
9	Ambient (K)	67.2	Deg F	10	Unused	0	Deg F
11	Unused	0	Deg F	12	Unused	0	Deg F
13	Unused	0	Deg F	14	Unused	0	Deg F
15	Unused	0	Deg F	16	Unused	0	Deg F
17	Unused	0	Deg F	18	Suction(RTD)	68.18	Deg F
19	Discharge(RTD)	141.5	Deg F				

Barometric Press. 29.88 InHg Specific Gravity .5992

*** SCANNING PERIOD IS 1 MINUTE(S) ***

COMMENTS: Fuel tube 3.068 in. diameter with a .6250 orifice
TOC UNIT #2 WHITE SUPERIOR
EMISSIONS COMPLIANCE TEST
** Concentrations and Parameters compiled using file C0918 **

EMISSIONS TEST

STATION # 19 ENGINE# 2 10:00:31

5 Apr 1989

*** GAS CONCENTRATIONS ***

#	INSTRUMENT LABEL	VALUE	UNITS	#	INSTRUMENT LABEL	VALUE	UNITS
3	Outlet NO	68.7	ppm	4	Outlet NOX	114	ppm
5	Ambient NO	0	ppm	6	Ambient NOX	0	ppm
7	Inlet CO	0	ppm	8	Inlet CO2	0	%
9	Outlet CO	213	ppm	10	Outlet CO2	5.387	%
11	Inlet Total HC	0	ppm	12	Outlet Total HC	23030	ppm
13	Inlet O2	0	%	14	Outlet O2	11.05	%
15	Ambient O2	0	%				

*** ENGINE PARAMETERS ***

#	INSTRUMENT LABEL	VALUE	UNITS	#	INSTRUMENT LABEL	VALUE	UNITS
80	Engine Speed	802.9	RPM	26	Suction (S)	520.8	psig
81	Unused	0	RPM	27	Discharge (S)	790.1	psig
33	Barocel 1	0	InH2O	28	Air Manifold	9.778	psig
34	Barocel 2	0	InH2O	82	Unused	0	HZ
35	Barocel 3	.221		83	Unused	0	GPM

*** FUEL TUBE PARAMETERS ***

#	INSTRUMENT LABEL	VALUE	UNITS	#	INSTRUMENT LABEL	VALUE	UNITS
23	Fuel Press.(R)	74.48	psig	24	Fuel Temp.(R)(RTD)	71.13	Deg F
25	Fuel Diff.(R)	42.91	InH2O				

*** TEMPERATURES ***

#	INSTRUMENT LABEL	VALUE	UNITS	#	INSTRUMENT LABEL	VALUE	UNITS
1	Suction Temp.(K)	0	Deg F	2	Discharge Temp.(K)	0	Deg F
3	Exhaust Stack (K)	746.5	Deg F	4	Sample Filter (K)	235.7	Deg F
5	After Pump (K)	213.8	Deg F	6	Ice Bath (K)	35.46	Deg F
7	Unused	0	Deg F	8	Inlet Air (K)	69.38	Deg F
9	Ambient (K)	67.33	Deg F	10	Unused	0	Deg F
11	Unused	0	Deg F	12	Unused	0	Deg F
13	Unused	0	Deg F	14	Unused	0	Deg F
15	Unused	0	Deg F	16	Unused	0	Deg F
17	Unused	0	Deg F	18	Suction(RTD)	68.24	Deg F
19	Discharge(RTD)	141.5	Deg F				

Barometric Press. 29.88 InHg Specific Gravity .5992

*** SCANNING PERIOD IS 1 MINUTE(S) ***

COMMENTS: Fuel tube 3.068 in. diameter with a .6250 orifice
TOC UNIT #2 WHITE SUPERIOR
EMISSIONS COMPLIANCE TEST

** Concentrations and Parameters compiled using file C0918 **

EMISSIONS TEST

STATION # 19 ENGINE# 2 10:01:45

5 Apr 1989

*** GAS CONCENTRATIONS ***

#	INSTRUMENT LABEL	VALUE	UNITS	#	INSTRUMENT LABEL	VALUE	UNITS
3	Outlet NO	66.69	ppm	4	Outlet NOX	113.1	ppm
5	Ambient NO	0	ppm	6	Ambient NOX	0	ppm
7	Inlet CO	0	ppm	8	Inlet CO2	0	%
9	Outlet CO	211.8	ppm	10	Outlet CO2	5.377	%
11	Inlet Total HC	0	ppm	12	Outlet Total HC	23000	ppm
13	Inlet O2	0	%	14	Outlet O2	11.04	%
15	Ambient O2	0	%				

*** ENGINE PARAMETERS ***

#	INSTRUMENT LABEL	VALUE	UNITS	#	INSTRUMENT LABEL	VALUE	UNITS
80	Engine Speed	801.4	RPM	26	Suction (S)	520	psig
81	Unused	0	RPM	27	Discharge (S)	789.1	psig
33	Barocel 1	0	InH2O	28	Air Manifold	9.775	psig
34	Barocel 2	0	InH2O	82	Unused	0	HZ
35	Barocel 3	-.0307		83	Unused	0	GPM

*** FUEL TUBE PARAMETERS ***

#	INSTRUMENT LABEL	VALUE	UNITS	#	INSTRUMENT LABEL	VALUE	UNITS
23	Fuel Press.(R)	74.14	psig	24	Fuel Temp.(R)(RTD)	71.27	Deg F
25	Fuel Diff.(R)	43.13	InH2O				

*** TEMPERATURES ***

#	INSTRUMENT LABEL	VALUE	UNITS	#	INSTRUMENT LABEL	VALUE	UNITS
1	Suction Temp.(K)	0	Deg F	2	Discharge Temp.(K)	0	Deg F
3	Exhaust Stack (K)	747.2	Deg F	4	Sample Filter (K)	235.5	Deg F
5	After Pump (K)	215.3	Deg F	6	Ice Bath (K)	35.45	Deg F
7	Unused	0	Deg F	8	Inlet Air (K)	69.03	Deg F
9	Ambient (K)	67.09	Deg F	10	Unused	0	Deg F
11	Unused	0	Deg F	12	Unused	0	Deg F
13	Unused	0	Deg F	14	Unused	0	Deg F
15	Unused	0	Deg F	16	Unused	0	Deg F
17	Unused	0	Deg F	18	Suction(RTD)	68.3	Deg F
19	Discharge(RTD)	141.6	Deg F				

Barometric Press. 29.88 InHg Specific Gravity .5992

*** SCANNING PERIOD IS 1 MINUTE(S) ***

COMMENTS: Fuel tube 3.068 in. diameter with a .6250 orifice
TOC UNIT #2 WHITE SUPERIOR
EMISSIONS COMPLIANCE TEST

** Concentrations and Parameters compiled using file C0918 **

EMISSIONS TEST

STATION # 19 ENGINE# 2 10:02:58

5 Apr 1989

*** GAS CONCENTRATIONS ***

#	INSTRUMENT LABEL	VALUE	UNITS	#	INSTRUMENT LABEL	VALUE	UNITS
3	Outlet NO	66.26	ppm	4	Outlet NOX	112.6	ppm
5	Ambient NO	0	ppm	6	Ambient NOX	0	ppm
7	Inlet CO	0	ppm	8	Inlet CO2	0	%
9	Outlet CO	211.1	ppm	10	Outlet CO2	5.372	%
11	Inlet Total HC	0	ppm	12	Outlet Total HC	22940	ppm
13	Inlet O2	0	%	14	Outlet O2	11.08	%
15	Ambient O2	0	%				

*** ENGINE PARAMETERS ***

#	INSTRUMENT LABEL	VALUE	UNITS	#	INSTRUMENT LABEL	VALUE	UNITS
80	Engine Speed	801	RPM	26	Suction (S)	520.5	psig
81	Unused	0	RPM	27	Discharge (S)	790.7	psig
33	Barocel 1	0	InH2O	28	Air Manifold	9.737	psig
34	Barocel 2	0	InH2O	82	Unused	0	HZ
35	Barocel 3	-.03667		83	Unused	0	GPM

*** FUEL TUBE PARAMETERS ***

#	INSTRUMENT LABEL	VALUE	UNITS	#	INSTRUMENT LABEL	VALUE	UNITS
23	Fuel Press.(R)	73.84	psig	24	Fuel Temp.(R)(RTD)	71.4	Deg F
25	Fuel Diff.(R)	43.29	InH2O				

*** TEMPERATURES ***

#	INSTRUMENT LABEL	VALUE	UNITS	#	INSTRUMENT LABEL	VALUE	UNITS
1	Suction Temp.(K)	0	Deg F	2	Discharge Temp.(K)	0	Deg F
3	Exhaust Stack (K)	746.1	Deg F	4	Sample Filter (K)	235.1	Deg F
5	After Pump (K)	217.2	Deg F	6	Ice Bath (K)	35.45	Deg F
7	Unused	0	Deg F	8	Inlet Air (K)	68.9	Deg F
9	Ambient (K)	66.67	Deg F	10	Unused	0	Deg F
11	Unused	0	Deg F	12	Unused	0	Deg F
13	Unused	0	Deg F	14	Unused	0	Deg F
15	Unused	0	Deg F	16	Unused	0	Deg F
17	Unused	0	Deg F	18	Suction(RTD)	68.34	Deg F
19	Discharge(RTD)	141.7	Deg F				

Barometric Press. 29.88 InHg Specific Gravity .5992

*** SCANNING PERIOD IS 1 MINUTE(S) ***

COMMENTS: Fuel tube 3.068 in. diameter with a .6250 orifice
TOC UNIT #2 WHITE SUPERIOR
EMISSIONS COMPLIANCE TEST
** Concentrations and Parameters compiled using file C0918 **

EMISSIONS TEST

STATION # 19 ENGINE# 2 10:04:12

5 Apr 1989

*** GAS CONCENTRATIONS ***

#	INSTRUMENT LABEL	VALUE	UNITS	#	INSTRUMENT LABEL	VALUE	UNITS
3	Outlet NO	68.6	ppm	4	Outlet NOX	113.8	ppm
5	Ambient NO	0	ppm	6	Ambient NOX	0	ppm
7	Inlet CO	0	ppm	8	Inlet CO2	0	%
9	Outlet CO	212	ppm	10	Outlet CO2	5.357	%
11	Inlet Total HC	0	ppm	12	Outlet Total HC	23220	ppm
13	Inlet O2	0	%	14	Outlet O2	11.06	%
15	Ambient O2	0	%				

*** ENGINE PARAMETERS ***

#	INSTRUMENT LABEL	VALUE	UNITS	#	INSTRUMENT LABEL	VALUE	UNITS
80	Engine Speed	801.7	RPM	26	Suction (S)	519.5	psig
81	Unused	0	RPM	27	Discharge (S)	789	psig
33	Barocel 1	0	InH2O	28	Air Manifold	9.766	psig
34	Barocel 2	0	InH2O	82	Unused	0	HZ
35	Barocel 3	-1.438		83	Unused	0	GPM

*** FUEL TUBE PARAMETERS ***

#	INSTRUMENT LABEL	VALUE	UNITS	#	INSTRUMENT LABEL	VALUE	UNITS
23	Fuel Press.(R)	73.86	psig	24	Fuel Temp.(R)(RTD)	71.49	Deg F
25	Fuel Diff.(R)	43.45	InH2O				

*** TEMPERATURES ***

#	INSTRUMENT LABEL	VALUE	UNITS	#	INSTRUMENT LABEL	VALUE	UNITS
1	Suction Temp.(K)	0	Deg F	2	Discharge Temp.(K)	0	Deg F
3	Exhaust Stack (K)	746.6	Deg F	4	Sample Filter (K)	234.8	Deg F
5	After Pump (K)	219.2	Deg F	6	Ice Bath (K)	35.48	Deg F
7	Unused	0	Deg F	8	Inlet Air (K)	69.1	Deg F
9	Ambient (K)	66.62	Deg F	10	Unused	0	Deg F
11	Unused	0	Deg F	12	Unused	0	Deg F
13	Unused	0	Deg F	14	Unused	0	Deg F
15	Unused	0	Deg F	16	Unused	0	Deg F
17	Unused	0	Deg F	18	Suction(RTD)	68.36	Deg F
19	Discharge(RTD)	141.7	Deg F				

Barometric Press. 29.88 InHg Specific Gravity .5992

*** SCANNING PERIOD IS 1 MINUTE(S) ***

COMMENTS: Fuel tube 3.068 in. diameter with a .6250 orifice
TOC UNIT #2 WHITE SUPERIOR
EMISSIONS COMPLIANCE TEST
** Concentrations and Parameters compiled using file C0918 **

EMISSIONS TEST

STATION # 19 ENGINE# 2 10:05:28

5 Apr 1989

*** GAS CONCENTRATIONS ***

#	INSTRUMENT LABEL	VALUE	UNITS	#	INSTRUMENT LABEL	VALUE	UNITS
3	Outlet NO	65.32	ppm	4	Outlet NOX	111.3	ppm
5	Ambient NO	0	ppm	6	Ambient NOX	0	ppm
7	Inlet CO	0	ppm	8	Inlet CO2	0	%
9	Outlet CO	215.7	ppm	10	Outlet CO2	5.339	%
11	Inlet Total HC	0	ppm	12	Outlet Total HC	23150	ppm
13	Inlet O2	0	%	14	Outlet O2	11.07	%
15	Ambient O2	0	%				

*** ENGINE PARAMETERS ***

#	INSTRUMENT LABEL	VALUE	UNITS	#	INSTRUMENT LABEL	VALUE	UNITS
80	Engine Speed	804.4	RPM	26	Suction (S)	520.3	psig
81	Unused	0	RPM	27	Discharge (S)	789.2	psig
33	Barocel 1	0	InH2O	28	Air Manifold	9.772	psig
34	Barocel 2	0	InH2O	82	Unused	0	HZ
35	Barocel 3	-.447		83	Unused	0	GPM

*** FUEL TUBE PARAMETERS ***

#	INSTRUMENT LABEL	VALUE	UNITS	#	INSTRUMENT LABEL	VALUE	UNITS
23	Fuel Press.(R)	73.95	psig	24	Fuel Temp.(R)(RTD)	71.56	Deg F
25	Fuel Diff.(R)	43.28	InH2O				

*** TEMPERATURES ***

#	INSTRUMENT LABEL	VALUE	UNITS	#	INSTRUMENT LABEL	VALUE	UNITS
1	Suction Temp.(K)	0	Deg F	2	Discharge Temp.(K)	0	Deg F
3	Exhaust Stack (K)	746.8	Deg F	4	Sample Filter (K)	234.6	Deg F
5	After Pump (K)	220	Deg F	6	Ice Bath (K)	35.5	Deg F
7	Unused	0	Deg F	8	Inlet Air (K)	68.36	Deg F
9	Ambient (K)	66.78	Deg F	10	Unused	0	Deg F
11	Unused	0	Deg F	12	Unused	0	Deg F
13	Unused	0	Deg F	14	Unused	0	Deg F
15	Unused	0	Deg F	16	Unused	0	Deg F
17	Unused	0	Deg F	18	Suction(RTD)	68.4	Deg F
19	Discharge(RTD)	141.6	Deg F				

Barometric Press. 29.88 InHg Specific Gravity .5992

*** SCANNING PERIOD IS 1 MINUTE(S) ***

COMMENTS: Fuel tube 3.068 in. diameter with a .6250 orifice
TOC UNIT #2 WHITE SUPERIOR
EMISSIONS COMPLIANCE TEST

** Concentrations and Parameters compiled using file C0918 **

Run #3

EMISSIONS TEST

STATION # 19 ENGINE# 2

5 Apr 1989 10:23:06

*** GAS CONCENTRATIONS ***

#	INSTRUMENT LABEL	VALUE	UNITS	#	INSTRUMENT LABEL	VALUE	UNITS
3	Outlet NO	36.55	ppm	4	Outlet NOX	75.84	ppm
5	Ambient NO	0	ppm	6	Ambient NOX	0	ppm
7	Inlet CO	0	ppm	8	Inlet CO2	0	%
9	Outlet CO	223.6	ppm	10	Outlet CO2	4.971	%
11	Inlet Total HC	0	ppm	12	Outlet Total HC	27500	ppm
13	Inlet O2	0	%	14	Outlet O2	11.72	%
15	Ambient O2	0	%				

*** ENGINE PARAMETERS ***

#	INSTRUMENT LABEL	VALUE	UNITS	#	INSTRUMENT LABEL	VALUE	UNITS
80	Engine Speed	702.1	RPM	26	Suction (S)	522.6	psig
81	Unused	0	RPM	27	Discharge (S)	757.1	psig
33	Barocel 1	0	InH2O	28	Air Manifold	7.138	psig
34	Barocel 2	0	InH2O	82	Unused	0	HZ
35	Barocel 3	-.3913		83	Unused	0	GPM

*** FUEL TUBE PARAMETERS ***

#	INSTRUMENT LABEL	VALUE	UNITS	#	INSTRUMENT LABEL	VALUE	UNITS
23	Fuel Press.(R)	76.11	psig	24	Fuel Temp.(R)(RTD)	72.53	Deg F
25	Fuel Diff.(R)	27.32	InH2O				

*** TEMPERATURES ***

#	INSTRUMENT LABEL	VALUE	UNITS	#	INSTRUMENT LABEL	VALUE	UNITS
1	Suction Temp.(K)	0	Deg F	2	Discharge Temp.(K)	0	Deg F
3	Exhaust Stack (K)	701.7	Deg F	4	Sample Filter (K)	232.4	Deg F
5	After Pump (K)	227.3	Deg F	6	Ice Bath (K)	35.77	Deg F
7	Unused	0	Deg F	8	Inlet Air (K)	68.19	Deg F
9	Ambient (K)	67.09	Deg F	10	Unused	0	Deg F
11	Unused	0	Deg F	12	Unused	0	Deg F
13	Unused	0	Deg F	14	Unused	0	Deg F
15	Unused	0	Deg F	16	Unused	0	Deg F
17	Unused	0	Deg F	18	Suction(RTD)	68.99	Deg F
19	Discharge(RTD)	132.8	Deg F				

Barometric Press. 29.88 InHg Specific Gravity .5992

*** SCANNING PERIOD IS 1 MINUTE(S) ***

COMMENTS: Fuel tube 3.068 in. diameter with a .6250 orifice
TOC UNIT #2 WHITE SUPERIOR
EMISSIONS COMPLIANCE TEST

** Concentrations and Parameters compiled using file C0918 **

EMISSIONS TEST

STATION # 19 ENGINE# 2 10:24:21

5 Apr 1989

*** GAS CONCENTRATIONS ***

#	INSTRUMENT LABEL	VALUE	UNITS	#	INSTRUMENT LABEL	VALUE	UNITS
3	Outlet NO	33.59	ppm	4	Outlet NOX	72.96	ppm
5	Ambient NO	0	ppm	6	Ambient NOX	0	ppm
7	Inlet CO	0	ppm	8	Inlet CO2	0	%
9	Outlet CO	226.5	ppm	10	Outlet CO2	4.989	%
11	Inlet Total HC	0	ppm	12	Outlet Total HC	27160	ppm
13	Inlet O2	0	%	14	Outlet O2	11.73	%
15	Ambient O2	0	%				

*** ENGINE PARAMETERS ***

#	INSTRUMENT LABEL	VALUE	UNITS	#	INSTRUMENT LABEL	VALUE	UNITS
80	Engine Speed	702.7	RPM	26	Suction (S)	522.6	psig
81	Unused	0	RPM	27	Discharge (S)	758.3	psig
33	Barocel 1	0	InH2O	28	Air Manifold	7.094	psig
34	Barocel 2	0	InH2O	82	Unused	0	HZ
35	Barocel 3	-.4191		83	Unused	0	GPM

*** FUEL TUBE PARAMETERS ***

#	INSTRUMENT LABEL	VALUE	UNITS	#	INSTRUMENT LABEL	VALUE	UNITS
23	Fuel Press.(R)	76.06	psig	24	Fuel Temp.(R)(RTD)	72.56	Deg F
25	Fuel Diff.(R)	27.3	InH2O				

*** TEMPERATURES ***

#	INSTRUMENT LABEL	VALUE	UNITS	#	INSTRUMENT LABEL	VALUE	UNITS
1	Suction Temp.(K)	0	Deg F	2	Discharge Temp.(K)	0	Deg F
3	Exhaust Stack (K)	699.9	Deg F	4	Sample Filter (K)	232	Deg F
5	After Pump (K)	227.4	Deg F	6	Ice Bath (K)	35.69	Deg F
7	Unused	0	Deg F	8	Inlet Air (K)	69.44	Deg F
9	Ambient (K)	67.22	Deg F	10	Unused	0	Deg F
11	Unused	0	Deg F	12	Unused	0	Deg F
13	Unused	0	Deg F	14	Unused	0	Deg F
15	Unused	0	Deg F	16	Unused	0	Deg F
17	Unused	0	Deg F	18	Suction(RTD)	69.02	Deg F
19	Discharge(RTD)	132.4	Deg F				

Barometric Press. 29.88 InHg Specific Gravity .5992

*** SCANNING PERIOD IS 1 MINUTE(S) ***

COMMENTS: Fuel tube 3.068 in. diameter with a .6250 orifice
TOC UNIT #2 WHITE SUPERIOR
EMISSIONS COMPLIANCE TEST

** Concentrations and Parameters compiled using file C0918 **

EMISSIONS TEST

STATION # 19 ENGINE# 2

5 Apr 1989 10:25:36

*** GAS CONCENTRATIONS ***

#	INSTRUMENT LABEL	VALUE	UNITS	#	INSTRUMENT LABEL	VALUE	UNITS
3	Outlet NO	37.72	ppm	4	Outlet NOX	76.63	ppm
5	Ambient NO	0	ppm	6	Ambient NOX	0	ppm
7	Inlet CO	0	ppm	8	Inlet CO2	0	%
9	Outlet CO	224.2	ppm	10	Outlet CO2	4.973	%
11	Inlet Total HC	0	ppm	12	Outlet Total HC	27680	ppm
13	Inlet O2	0	%	14	Outlet O2	11.73	%
15	Ambient O2	0	%				

*** ENGINE PARAMETERS ***

#	INSTRUMENT LABEL	VALUE	UNITS	#	INSTRUMENT LABEL	VALUE	UNITS
80	Engine Speed	703.8	RPM	26	Suction (S)	522.9	psig
81	Unused	0	RPM	27	Discharge (S)	757.3	psig
33	Barocel 1	0	InH2O	28	Air Manifold	7.028	psig
34	Barocel 2	0	InH2O	82	Unused	0	HZ
35	Barocel 3	-.7594		83	Unused	0	GPM

*** FUEL TUBE PARAMETERS ***

#	INSTRUMENT LABEL	VALUE	UNITS	#	INSTRUMENT LABEL	VALUE	UNITS
23	Fuel Press.(R)	76	psig	24	Fuel Temp.(R)(RTD)	72.65	Deg F
25	Fuel Diff.(R)	27.25	InH2O				

*** TEMPERATURES ***

#	INSTRUMENT LABEL	VALUE	UNITS	#	INSTRUMENT LABEL	VALUE	UNITS
1	Suction Temp.(K)	0	Deg F	2	Discharge Temp.(K)	0	Deg F
3	Exhaust Stack (K)	698.2	Deg F	4	Sample Filter (K)	231.3	Deg F
5	After Pump (K)	227.5	Deg F	6	Ice Bath (K)	35.77	Deg F
7	Unused	0	Deg F	8	Inlet Air (K)	70	Deg F
9	Ambient (K)	67.4	Deg F	10	Unused	0	Deg F
11	Unused	0	Deg F	12	Unused	0	Deg F
13	Unused	0	Deg F	14	Unused	0	Deg F
15	Unused	0	Deg F	16	Unused	0	Deg F
17	Unused	0	Deg F	18	Suction(RTD)	69.08	Deg F
19	Discharge(RTD)	132.2	Deg F				

Barometric Press. 29.88 InHg Specific Gravity .5992

*** SCANNING PERIOD IS 1 MINUTE(S) ***

COMMENTS: Fuel tube 3.068 in. diameter with a .6250 orifice
TOC UNIT #2 WHITE SUPERIOR
EMISSIONS COMPLIANCE TEST
** Concentrations and Parameters compiled using file C0918 **

EMISSIONS TEST

STATION # 19 ENGINE# 2

5 Apr 1989 10:26:51

*** GAS CONCENTRATIONS ***

#	INSTRUMENT LABEL	VALUE	UNITS	#	INSTRUMENT LABEL	VALUE	UNITS
3	Outlet NO	34.48	ppm	4	Outlet NOX	72.71	ppm
5	Ambient NO	0	ppm	6	Ambient NOX	0	ppm
7	Inlet CO	0	ppm	8	Inlet CO2	0	%
9	Outlet CO	224.8	ppm	10	Outlet CO2	4.952	%
11	Inlet Total HC	0	ppm	12	Outlet Total HC	27340	ppm
13	Inlet O2	0	%	14	Outlet O2	11.74	%
15	Ambient O2	0	%				

*** ENGINE PARAMETERS ***

#	INSTRUMENT LABEL	VALUE	UNITS	#	INSTRUMENT LABEL	VALUE	UNITS
80	Engine Speed	701.4	RPM	26	Suction (S)	523.1	psig
81	Unused	0	RPM	27	Discharge (S)	756.9	psig
33	Barocel 1	0	InH2O	28	Air Manifold	7.035	psig
34	Barocel 2	0	InH2O	82	Unused	0	HZ
35	Barocel 3	.09011		83	Unused	0	GPM

*** FUEL TUBE PARAMETERS ***

#	INSTRUMENT LABEL	VALUE	UNITS	#	INSTRUMENT LABEL	VALUE	UNITS
23	Fuel Press.(R)	75.78	psig	24	Fuel Temp.(R)(RTD)	72.75	Deg F
25	Fuel Diff.(R)	27.23	InH2O				

*** TEMPERATURES ***

#	INSTRUMENT LABEL	VALUE	UNITS	#	INSTRUMENT LABEL	VALUE	UNITS
1	Suction Temp.(K)	0	Deg F	2	Discharge Temp.(K)	0	Deg F
3	Exhaust Stack (K)	697.5	Deg F	4	Sample Filter (K)	231.1	Deg F
5	After Pump (K)	227.6	Deg F	6	Ice Bath (K)	35.8	Deg F
7	Unused	0	Deg F	8	Inlet Air (K)	69.36	Deg F
9	Ambient (K)	67.54	Deg F	10	Unused	0	Deg F
11	Unused	0	Deg F	12	Unused	0	Deg F
13	Unused	0	Deg F	14	Unused	0	Deg F
15	Unused	0	Deg F	16	Unused	0	Deg F
17	Unused	0	Deg F	18	Suction(RTD)	69.12	Deg F
19	Discharge(RTD)	132.1	Deg F				

Barometric Press. 29.88 InHg Specific Gravity .5992

*** SCANNING PERIOD IS 1 MINUTE(S) ***

COMMENTS: Fuel tube 3.068 in. diameter with a .6250 orifice
TOC UNIT #2 WHITE SUPERIOR
EMISSIONS COMPLIANCE TEST

** Concentrations and Parameters compiled using file C0918 **

EMISSIONS TEST

STATION # 19 ENGINE# 2

5 Apr 1989 10:28:06

*** GAS CONCENTRATIONS ***

#	INSTRUMENT LABEL	VALUE	UNITS	#	INSTRUMENT LABEL	VALUE	UNITS
3	Outlet NO	37.1	ppm	4	Outlet NOX	77.3	ppm
5	Ambient NO	0	ppm	6	Ambient NOX	0	ppm
7	Inlet CO	0	ppm	8	Inlet CO2	0	%
9	Outlet CO	226.9	ppm	10	Outlet CO2	4.938	%
11	Inlet Total HC	0	ppm	12	Outlet Total HC	27460	ppm
13	Inlet O2	0	%	14	Outlet O2	11.77	%
15	Ambient O2	0	%				

*** ENGINE PARAMETERS ***

#	INSTRUMENT LABEL	VALUE	UNITS	#	INSTRUMENT LABEL	VALUE	UNITS
80	Engine Speed	701.8	RPM	26	Suction (S)	522.2	psig
81	Unused	0	RPM	27	Discharge (S)	757.3	psig
33	Barocel 1	0	InH2O	28	Air Manifold	7.082	psig
34	Barocel 2	0	InH2O	82	Unused	0	HZ
35	Barocel 3	-.3096		83	Unused	0	GPM

*** FUEL TUBE PARAMETERS ***

#	INSTRUMENT LABEL	VALUE	UNITS	#	INSTRUMENT LABEL	VALUE	UNITS
23	Fuel Press.(R)	76.16	psig	24	Fuel Temp.(R)(RTD)	72.81	Deg F
25	Fuel Diff.(R)	27.18	InH2O				

*** TEMPERATURES ***

#	INSTRUMENT LABEL	VALUE	UNITS	#	INSTRUMENT LABEL	VALUE	UNITS
1	Suction Temp.(K)	0	Deg F	2	Discharge Temp.(K)	0	Deg F
3	Exhaust Stack (K)	695.7	Deg F	4	Sample Filter (K)	230.5	Deg F
5	After Pump (K)	228	Deg F	6	Ice Bath (K)	35.79	Deg F
7	Unused	0	Deg F	8	Inlet Air (K)	69.03	Deg F
9	Ambient (K)	67.51	Deg F	10	Unused	0	Deg F
11	Unused	0	Deg F	12	Unused	0	Deg F
13	Unused	0	Deg F	14	Unused	0	Deg F
15	Unused	0	Deg F	16	Unused	0	Deg F
17	Unused	0	Deg F	18	Suction(RTD)	69.16	Deg F
19	Discharge(RTD)	131.9	Deg F				

Barometric Press. 29.88 InHg Specific Gravity .5992

*** SCANNING PERIOD IS 1 MINUTE(S) ***

COMMENTS: Fuel tube 3.068 in. diameter with a .6250 orifice
TOC UNIT #2 WHITE SUPERIOR
EMISSIONS COMPLIANCE TEST

** Concentrations and Parameters compiled using file C0918 **

EMISSIONS TEST

STATION # 19 ENGINE# 2

5 Apr 1989 10:29:21

*** GAS CONCENTRATIONS ***

#	INSTRUMENT LABEL	VALUE	UNITS	#	INSTRUMENT LABEL	VALUE	UNITS
3	Outlet NO	31.56	ppm	4	Outlet NOX	70.36	ppm
5	Ambient NO	0	ppm	6	Ambient NOX	0	ppm
7	Inlet CO	0	ppm	8	Inlet CO2	0	%
9	Outlet CO	227.2	ppm	10	Outlet CO2	4.922	%
11	Inlet Total HC	0	ppm	12	Outlet Total HC	27600	ppm
13	Inlet O2	0	%	14	Outlet O2	11.76	%
15	Ambient O2	0	%				

*** ENGINE PARAMETERS ***

#	INSTRUMENT LABEL	VALUE	UNITS	#	INSTRUMENT LABEL	VALUE	UNITS
80	Engine Speed	701.5	RPM	26	Suction (S)	524.1	psig
81	Unused	0	RPM	27	Discharge (S)	755.7	psig
33	Barocel 1	0	InH2O	28	Air Manifold	7.069	psig
34	Barocel 2	0	InH2O	82	Unused	0	HZ
35	Barocel 3	-.3274		83	Unused	0	GPM

*** FUEL TUBE PARAMETERS ***

#	INSTRUMENT LABEL	VALUE	UNITS	#	INSTRUMENT LABEL	VALUE	UNITS
23	Fuel Press.(R)	76.47	psig	24	Fuel Temp.(R)(RTD)	72.89	Deg F
25	Fuel Diff.(R)	27.11	InH2O				

*** TEMPERATURES ***

#	INSTRUMENT LABEL	VALUE	UNITS	#	INSTRUMENT LABEL	VALUE	UNITS
1	Suction Temp.(K)	0	Deg F	2	Discharge Temp.(K)	0	Deg F
3	Exhaust Stack (K)	695	Deg F	4	Sample Filter (K)	229.8	Deg F
5	After Pump (K)	227.3	Deg F	6	Ice Bath (K)	35.84	Deg F
7	Unused	0	Deg F	8	Inlet Air (K)	69.72	Deg F
9	Ambient (K)	67.32	Deg F	10	Unused	0	Deg F
11	Unused	0	Deg F	12	Unused	0	Deg F
13	Unused	0	Deg F	14	Unused	0	Deg F
15	Unused	0	Deg F	16	Unused	0	Deg F
17	Unused	0	Deg F	18	Suction(RTD)	69.19	Deg F
19	Discharge(RTD)	131.9	Deg F				

Barometric Press. 29.88 InHg Specific Gravity .5992

*** SCANNING PERIOD IS 1 MINUTE(S) ***

COMMENTS: Fuel tube 3.068 in. diameter with a .6250 orifice
TOC UNIT #2 WHITE SUPERIOR
EMISSIONS COMPLIANCE TEST

** Concentrations and Parameters compiled using file C0918 **

EMISSIONS TEST

STATION # 19 ENGINE# 2 10:30:35

5 Apr 1989

*** GAS CONCENTRATIONS ***

#	INSTRUMENT LABEL	VALUE	UNITS	#	INSTRUMENT LABEL	VALUE	UNITS
3	Outlet NO	30.47	ppm	4	Outlet NOX	68.66	ppm
5	Ambient NO	0	ppm	6	Ambient NOX	0	ppm
7	Inlet CO	0	ppm	8	Inlet CO2	0	%
9	Outlet CO	226.7	ppm	10	Outlet CO2	4.945	%
11	Inlet Total HC	0	ppm	12	Outlet Total HC	27310	ppm
13	Inlet O2	0	%	14	Outlet O2	11.75	%
15	Ambient O2	0	%				

*** ENGINE PARAMETERS ***

#	INSTRUMENT LABEL	VALUE	UNITS	#	INSTRUMENT LABEL	VALUE	UNITS
80	Engine Speed	702.4	RPM	26	Suction (S)	522.7	psig
81	Unused	0	RPM	27	Discharge (S)	758.6	psig
33	Barocel 1	0	InH2O	28	Air Manifold	7.069	psig
34	Barocel 2	0	InH2O	82	Unused	0	HZ
35	Barocel 3	-.2457		83	Unused	0	GPM

*** FUEL TUBE PARAMETERS ***

#	INSTRUMENT LABEL	VALUE	UNITS	#	INSTRUMENT LABEL	VALUE	UNITS
23	Fuel Press.(R)	76.16	psig	24	Fuel Temp.(R)(RTD)	72.98	Deg F
25	Fuel Diff.(R)	27.34	InH2O				

*** TEMPERATURES ***

#	INSTRUMENT LABEL	VALUE	UNITS	#	INSTRUMENT LABEL	VALUE	UNITS
1	Suction Temp.(K)	0	Deg F	2	Discharge Temp.(K)	0	Deg F
3	Exhaust Stack (K)	695.8	Deg F	4	Sample Filter (K)	229.2	Deg F
5	After Pump (K)	226.9	Deg F	6	Ice Bath (K)	35.89	Deg F
7	Unused	0	Deg F	8	Inlet Air (K)	69.99	Deg F
9	Ambient (K)	67.54	Deg F	10	Unused	0	Deg F
11	Unused	0	Deg F	12	Unused	0	Deg F
13	Unused	0	Deg F	14	Unused	0	Deg F
15	Unused	0	Deg F	16	Unused	0	Deg F
17	Unused	0	Deg F	18	Suction(RTD)	69.2	Deg F
19	Discharge(RTD)	132	Deg F				

Barometric Press. 29.88 InHg Specific Gravity .5992

*** SCANNING PERIOD IS 1 MINUTE(S) ***

COMMENTS: Fuel tube 3.068 in. diameter with a .6250 orifice
TOC UNIT #2 WHITE SUPERIOR
EMISSIONS COMPLIANCE TEST

** Concentrations and Parameters compiled using file C0918 **

EMISSIONS TEST

STATION # 19 ENGINE# 2 10:31:51

5 Apr 1989

*** GAS CONCENTRATIONS ***

#	INSTRUMENT LABEL	VALUE	UNITS	#	INSTRUMENT LABEL	VALUE	UNITS
3	Outlet NO	35.94	ppm	4	Outlet NOX	75.21	ppm
5	Ambient NO	0	ppm	6	Ambient NOX	0	ppm
7	Inlet CO	0	ppm	8	Inlet CO2	0	%
9	Outlet CO	224	ppm	10	Outlet CO2	4.969	%
11	Inlet Total HC	0	ppm	12	Outlet Total HC	27550	ppm
13	Inlet O2	0	%	14	Outlet O2	11.72	%
15	Ambient O2	0	%				

*** ENGINE PARAMETERS ***

#	INSTRUMENT LABEL	VALUE	UNITS	#	INSTRUMENT LABEL	VALUE	UNITS
80	Engine Speed	700.6	RPM	26	Suction (S)	523.8	psig
81	Unused	0	RPM	27	Discharge (S)	758.2	psig
33	Barocel 1	0	InH2O	28	Air Manifold	6.947	psig
34	Barocel 2	0	InH2O	82	Unused	0	HZ
35	Barocel 3	-.3028		83	Unused	0	GPM

*** FUEL TUBE PARAMETERS ***

#	INSTRUMENT LABEL	VALUE	UNITS	#	INSTRUMENT LABEL	VALUE	UNITS
23	Fuel Press.(R)	75.71	psig	24	Fuel Temp.(R)(RTD)	73.07	Deg F
25	Fuel Diff.(R)	27.15	InH2O				

*** TEMPERATURES ***

#	INSTRUMENT LABEL	VALUE	UNITS	#	INSTRUMENT LABEL	VALUE	UNITS
1	Suction Temp.(K)	0	Deg F	2	Discharge Temp.(K)	0	Deg F
3	Exhaust Stack (K)	694.5	Deg F	4	Sample Filter (K)	228.9	Deg F
5	After Pump (K)	227	Deg F	6	Ice Bath (K)	35.86	Deg F
7	Unused	0	Deg F	8	Inlet Air (K)	70.94	Deg F
9	Ambient (K)	67.96	Deg F	10	Unused	0	Deg F
11	Unused	0	Deg F	12	Unused	0	Deg F
13	Unused	0	Deg F	14	Unused	0	Deg F
15	Unused	0	Deg F	16	Unused	0	Deg F
17	Unused	0	Deg F	18	Suction(RTD)	69.2	Deg F
19	Discharge(RTD)	132.2	Deg F				

Barometric Press. 29.88 InHg Specific Gravity .5992

*** SCANNING PERIOD IS 1 MINUTE(S) ***

COMMENTS: Fuel tube 3.068 in. diameter with a .6250 orifice
TOC UNIT #2 WHITE SUPERIOR
EMISSIONS COMPLIANCE TEST
** Concentrations and Parameters compiled using file C0918 **

EMISSIONS TEST

STATION # 19 ENGINE# 2 10:33:10

5 Apr 1989

*** GAS CONCENTRATIONS ***

#	INSTRUMENT LABEL	VALUE	UNITS	#	INSTRUMENT LABEL	VALUE	UNITS
3	Outlet NO	37.76	ppm	4	Outlet NOX	76.73	ppm
5	Ambient NO	0	ppm	6	Ambient NOX	0	ppm
7	Inlet CO	0	ppm	8	Inlet CO2	0	%
9	Outlet CO	223.2	ppm	10	Outlet CO2	4.971	%
11	Inlet Total HC	0	ppm	12	Outlet Total HC	27200	ppm
13	Inlet O2	0	%	14	Outlet O2	11.71	%
15	Ambient O2	0	%				

*** ENGINE PARAMETERS ***

#	INSTRUMENT LABEL	VALUE	UNITS	#	INSTRUMENT LABEL	VALUE	UNITS
80	Engine Speed	698.7	RPM	26	Suction (S)	524.5	psig
81	Unused	0	RPM	27	Discharge (S)	757.7	psig
33	Barocel 1	0	InH2O	28	Air Manifold	6.98	psig
34	Barocel 2	0	InH2O	82	Unused	0	HZ
35	Barocel 3	-.3486		83	Unused	0	GPM

*** FUEL TUBE PARAMETERS ***

#	INSTRUMENT LABEL	VALUE	UNITS	#	INSTRUMENT LABEL	VALUE	UNITS
23	Fuel Press.(R)	75.7	psig	24	Fuel Temp.(R)(RTD)	73.2	Deg F
25	Fuel Diff.(R)	27.26	InH2O				

*** TEMPERATURES ***

#	INSTRUMENT LABEL	VALUE	UNITS	#	INSTRUMENT LABEL	VALUE	UNITS
1	Suction Temp.(K)	0	Deg F	2	Discharge Temp.(K)	0	Deg F
3	Exhaust Stack (K)	694.7	Deg F	4	Sample Filter (K)	228.1	Deg F
5	After Pump (K)	227.2	Deg F	6	Ice Bath (K)	35.8	Deg F
7	Unused	0	Deg F	8	Inlet Air (K)	70.91	Deg F
9	Ambient (K)	67.78	Deg F	10	Unused	0	Deg F
11	Unused	0	Deg F	12	Unused	0	Deg F
13	Unused	0	Deg F	14	Unused	0	Deg F
15	Unused	0	Deg F	16	Unused	0	Deg F
17	Unused	0	Deg F	18	Suction(RTD)	69.23	Deg F
19	Discharge(RTD)	132.2	Deg F				

Barometric Press. 29.88 InHg Specific Gravity .5992

*** SCANNING PERIOD IS 1 MINUTE(S) ***

COMMENTS: Fuel tube 3.068 in. diameter with a .6250 orifice
TOC UNIT #2 WHITE SUPERIOR
EMISSIONS COMPLIANCE TEST

** Concentrations and Parameters compiled using file C0918 **

EMISSIONS TEST

STATION # 19 ENGINE# 2 10:34:25

5 Apr 1989

*** GAS CONCENTRATIONS ***

#	INSTRUMENT LABEL	VALUE	UNITS	#	INSTRUMENT LABEL	VALUE	UNITS
3	Outlet NO	38.84	ppm	4	Outlet NOX	78.38	ppm
5	Ambient NO	0	ppm	6	Ambient NOX	0	ppm
7	Inlet CO	0	ppm	8	Inlet CO2	0	%
9	Outlet CO	223.9	ppm	10	Outlet CO2	4.979	%
11	Inlet Total HC	0	ppm	12	Outlet Total HC	27400	ppm
13	Inlet O2	0	%	14	Outlet O2	11.7	%
15	Ambient O2	0	%				

*** ENGINE PARAMETERS ***

#	INSTRUMENT LABEL	VALUE	UNITS	#	INSTRUMENT LABEL	VALUE	UNITS
80	Engine Speed	701.3	RPM	26	Suction (S)	524.2	psig
81	Unused	0	RPM	27	Discharge (S)	758.9	psig
33	Barocel 1	0	InH2O	28	Air Manifold	7.023	psig
34	Barocel 2	0	InH2O	82	Unused	0	HZ
35	Barocel 3	-.0909		83	Unused	0	GPM

*** FUEL TUBE PARAMETERS ***

#	INSTRUMENT LABEL	VALUE	UNITS	#	INSTRUMENT LABEL	VALUE	UNITS
23	Fuel Press.(R)	75.57	psig	24	Fuel Temp.(R)(RTD)	73.33	Deg F
25	Fuel Diff.(R)	27.53	InH2O				

*** TEMPERATURES ***

#	INSTRUMENT LABEL	VALUE	UNITS	#	INSTRUMENT LABEL	VALUE	UNITS
1	Suction Temp.(K)	0	Deg F	2	Discharge Temp.(K)	0	Deg F
3	Exhaust Stack (K)	695	Deg F	4	Sample Filter (K)	227.9	Deg F
5	After Pump (K)	227.1	Deg F	6	Ice Bath (K)	35.89	Deg F
7	Unused	0	Deg F	8	Inlet Air (K)	71.4	Deg F
9	Ambient (K)	67.95	Deg F	10	Unused	0	Deg F
11	Unused	0	Deg F	12	Unused	0	Deg F
13	Unused	0	Deg F	14	Unused	0	Deg F
15	Unused	0	Deg F	16	Unused	0	Deg F
17	Unused	0	Deg F	18	Suction(RTD)	69.27	Deg F
19	Discharge(RTD)	132.2	Deg F				

Barometric Press. 29.88 InHg Specific Gravity .5992

*** SCANNING PERIOD IS 1 MINUTE(S) ***

COMMENTS: Fuel tube 3.068 in. diameter with a .6250 orifice
TOC UNIT #2 WHITE SUPERIOR
EMISSIONS COMPLIANCE TEST

** Concentrations and Parameters compiled using file C0918 **

EMISSIONS TEST

STATION # 19 ENGINE# 2 10:35:40

5 Apr 1989

*** GAS CONCENTRATIONS ***

#	INSTRUMENT LABEL	VALUE	UNITS	#	INSTRUMENT LABEL	VALUE	UNITS
3	Outlet NO	31.75	ppm	4	Outlet NOX	69	ppm
5	Ambient NO	0	ppm	6	Ambient NOX	0	ppm
7	Inlet CO	0	ppm	8	Inlet CO2	0	%
9	Outlet CO	223.2	ppm	10	Outlet CO2	4.977	%
11	Inlet Total HC	0	ppm	12	Outlet Total HC	27160	ppm
13	Inlet O2	0	%	14	Outlet O2	11.73	%
15	Ambient O2	0	%				

*** ENGINE PARAMETERS ***

#	INSTRUMENT LABEL	VALUE	UNITS	#	INSTRUMENT LABEL	VALUE	UNITS
80	Engine Speed	698.4	RPM	26	Suction (S)	523.5	psig
81	Unused	0	RPM	27	Discharge (S)	758.8	psig
33	Barocel 1	0	InH2O	28	Air Manifold	7.018	psig
34	Barocel 2	0	InH2O	82	Unused	0	HZ
35	Barocel 3	-.3658		83	Unused	0	GPM

*** FUEL TUBE PARAMETERS ***

#	INSTRUMENT LABEL	VALUE	UNITS	#	INSTRUMENT LABEL	VALUE	UNITS
23	Fuel Press.(R)	75.57	psig	24	Fuel Temp.(R)(RTD)	73.46	Deg F
25	Fuel Diff.(R)	27.4	InH2O				

*** TEMPERATURES ***

#	INSTRUMENT LABEL	VALUE	UNITS	#	INSTRUMENT LABEL	VALUE	UNITS
1	Suction Temp.(K)	0	Deg F	2	Discharge Temp.(K)	0	Deg F
3	Exhaust Stack (K)	695.4	Deg F	4	Sample Filter (K)	227.4	Deg F
5	After Pump (K)	227	Deg F	6	Ice Bath (K)	35.87	Deg F
7	Unused	0	Deg F	8	Inlet Air (K)	71.39	Deg F
9	Ambient (K)	67.99	Deg F	10	Unused	0	Deg F
11	Unused	0	Deg F	12	Unused	0	Deg F
13	Unused	0	Deg F	14	Unused	0	Deg F
15	Unused	0	Deg F	16	Unused	0	Deg F
17	Unused	0	Deg F	18	Suction(RTD)	69.32	Deg F
19	Discharge(RTD)	132.2	Deg F				

Barometric Press. 29.88 InHg Specific Gravity .5992

*** SCANNING PERIOD IS 1 MINUTE(S) ***

COMMENTS: Fuel tube 3.068 in. diameter with a .6250 orifice
TOC UNIT #2 WHITE SUPERIOR
EMISSIONS COMPLIANCE TEST

** Concentrations and Parameters compiled using file C0918 **

EMISSIONS TEST

STATION # 19 ENGINE# 2 10:36:54

5 Apr 1989

*** GAS CONCENTRATIONS ***

#	INSTRUMENT LABEL	VALUE	UNITS	#	INSTRUMENT LABEL	VALUE	UNITS
3	Outlet NO	31.77	ppm	4	Outlet NOX	69.57	ppm
5	Ambient NO	0	ppm	6	Ambient NOX	0	ppm
7	Inlet CO	0	ppm	8	Inlet CO2	0	%
9	Outlet CO	222.7	ppm	10	Outlet CO2	4.976	%
11	Inlet Total HC	0	ppm	12	Outlet Total HC	26970	ppm
13	Inlet O2	0	%	14	Outlet O2	11.74	%
15	Ambient O2	0	%				

*** ENGINE PARAMETERS ***

#	INSTRUMENT LABEL	VALUE	UNITS	#	INSTRUMENT LABEL	VALUE	UNITS
80	Engine Speed	700.8	RPM	26	Suction (S)	524.1	psig
81	Unused	0	RPM	27	Discharge (S)	756.4	psig
33	Barocel 1	0	InH2O	28	Air Manifold	7.063	psig
34	Barocel 2	0	InH2O	82	Unused	0	HZ
35	Barocel 3	-.3251		83	Unused	0	GPM

*** FUEL TUBE PARAMETERS ***

#	INSTRUMENT LABEL	VALUE	UNITS	#	INSTRUMENT LABEL	VALUE	UNITS
23	Fuel Press.(R)	75.66	psig	24	Fuel Temp.(R)(RTD)	73.54	Deg F
25	Fuel Diff.(R)	27.49	InH2O				

*** TEMPERATURES ***

#	INSTRUMENT LABEL	VALUE	UNITS	#	INSTRUMENT LABEL	VALUE	UNITS
1	Suction Temp.(K)	0	Deg F	2	Discharge Temp.(K)	0	Deg F
3	Exhaust Stack (K)	695.4	Deg F	4	Sample Filter (K)	226.9	Deg F
5	After Pump (K)	227.7	Deg F	6	Ice Bath (K)	35.92	Deg F
7	Unused	0	Deg F	8	Inlet Air (K)	70.18	Deg F
9	Ambient (K)	67.97	Deg F	10	Unused	0	Deg F
11	Unused	0	Deg F	12	Unused	0	Deg F
13	Unused	0	Deg F	14	Unused	0	Deg F
15	Unused	0	Deg F	16	Unused	0	Deg F
17	Unused	0	Deg F	18	Suction(RTD)	69.35	Deg F
19	Discharge(RTD)	132.1	Deg F				

Barometric Press. 29.88 InHg Specific Gravity .5992

*** SCANNING PERIOD IS 1 MINUTE(S) ***

COMMENTS: Fuel tube 3.068 in. diameter with a .6250 orifice
TOC UNIT #2 WHITE SUPERIOR
EMISSIONS COMPLIANCE TEST

** Concentrations and Parameters compiled using file C0918 **

Centrifugal Compressor
Station # 19 Engine# 2

5 Apr 1989 10:36:54

*** OPERATING CONDITIONS ***

Suction (S)	524.1	psig	Suction(RTD)	69.35	Deg F
Discharge (S)	756.4	psig	Discharge(RTD)	132.1	Deg F
Fuel Press.(R)	75.66	psig	Fuel Temp.(R)(RTD)	73.54	Deg F
Barometric Press.	29.88	InHg	Ambient (K)	67.97	Deg F
Specific Gravity	.5992		Exhaust Stack (K)	695.4	Deg F
Fuel Diff.(R)	27.49	InH2O			

*** DWR CALCULATIONS ***

Suction Entropy	0	BTU/lb.mole-R
Suction Enthalpy	0	BTU/lb.mole
Discharge Entropy	0	BTU/lb.mole-R
Discharge Enthalpy	0	BTU/lb.mole
Entropy Difference	0	BTU/lb.mole-R
Enthalpy Difference	.0001	BTU/lb.mole

*** THROUGHPUT CALCULATIONS ***

Flow Temperature	69.3519	Deg F
Flow Pressure	524.077	psig
EFM Freq.	0	Hz
Throughput	0	MMSCFD
Actual Flow	0	ACFM

*** ENGINE AND FUEL METER CALCULATIONS ***

Engine Power 627.7 HP
Engine Load 62.77 %
Fuel Consumption 84.02 SCFM (5041.01 SCFH)
EPA Stnd. Fuel Cons. 85.51 SCFM (5130.41 SCFH)
Fuel Efficiency 8360 BSFC

*** COMPRESSOR PERFORMANCE PARAMETERS ***

Inlet Air Temp.	0	Deg F
Gas Horsepower	627.739	Hp
Power Turbine Speed	0	Rpm
Q/N	0	
Pressure Coefficient	0	
Adiabatic Efficiency	0	Percent
Hydraulic Efficiency	0	Percent
Hydraulic Head	0	Ft-lbf/lbm

EMISSIONS TEST

STATION # 19 ENGINE# 2 10:38:09

5 Apr 1989

*** GAS CONCENTRATIONS ***

#	INSTRUMENT LABEL	VALUE	UNITS	#	INSTRUMENT LABEL	VALUE	UNITS
3	Outlet NO	30.96	ppm	4	Outlet NOX	69.76	ppm
5	Ambient NO	0	ppm	6	Ambient NOX	0	ppm
7	Inlet CO	0	ppm	8	Inlet CO2	0	%
9	Outlet CO	224.9	ppm	10	Outlet CO2	4.978	%
11	Inlet Total HC	0	ppm	12	Outlet Total HC	27310	ppm
13	Inlet O2	0	%	14	Outlet O2	11.76	%
15	Ambient O2	0	%				

*** ENGINE PARAMETERS ***

#	INSTRUMENT LABEL	VALUE	UNITS	#	INSTRUMENT LABEL	VALUE	UNITS
80	Engine Speed	700.4	RPM	26	Suction (S)	523.6	psig
81	Unused	0	RPM	27	Discharge (S)	756.4	psig
33	Barocel 1	0	InH20	28	Air Manifold	6.967	psig
34	Barocel 2	0	InH20	82	Unused	0	HZ
35	Barocel 3	-.499		83	Unused	0	GPM

*** FUEL TUBE PARAMETERS ***

#	INSTRUMENT LABEL	VALUE	UNITS	#	INSTRUMENT LABEL	VALUE	UNITS
23	Fuel Press.(R)	76.12	psig	24	Fuel Temp.(R)(RTD)	73.64	Deg F
25	Fuel Diff.(R)	27.1	InH20				

*** TEMPERATURES ***

#	INSTRUMENT LABEL	VALUE	UNITS	#	INSTRUMENT LABEL	VALUE	UNITS
1	Suction Temp.(K)	0	Deg F	2	Discharge Temp.(K)	0	Deg F
3	Exhaust Stack (K)	693.2	Deg F	4	Sample Filter (K)	226.4	Deg F
5	After Pump (K)	226.7	Deg F	6	Ice Bath (K)	35.9	Deg F
7	Unused	0	Deg F	8	Inlet Air (K)	69.92	Deg F
9	Ambient (K)	67.72	Deg F	10	Unused	0	Deg F
11	Unused	0	Deg F	12	Unused	0	Deg F
13	Unused	0	Deg F	14	Unused	0	Deg F
15	Unused	0	Deg F	16	Unused	0	Deg F
17	Unused	0	Deg F	18	Suction(RTD)	69.38	Deg F
19	Discharge(RTD)	131.9	Deg F				

Barometric Press. 29.88 InHg Specific Gravity .5992

*** SCANNING PERIOD IS 1 MINUTE(S) ***

COMMENTS: Fuel tube 3.068 in. diameter with a .6250 orifice
TOC UNIT #2 WHITE SUPERIOR
EMISSIONS COMPLIANCE TEST
** Concentrations and Parameters compiled using file C0918 **

Centrifugal Compressor
Station # 19 Engine# 2

5 Apr 1989 10:38:09

*** OPERATING CONDITIONS ***

Suction (S)	523.6	psig	Suction(RTD)	69.38	Deg F
Discharge (S)	756.4	psig	Discharge(RTD)	131.9	Deg F
Fuel Press.(R)	76.12	psig	Fuel Temp.(R)(RTD)	73.64	Deg F
Barometric Press.	29.88	InHg	Ambient (K)	67.72	Deg F
Specific Gravity	.5992		Exhaust Stack (K)	693.2	Deg F
Fuel Diff.(R)	27.1	InH2O			

*** BWR CALCULATIONS ***

Suction Entropy	0	BTU/lb.mole-R
Suction Enthalpy	0	BTU/lb.mole
Discharge Entropy	0	BTU/lb.mole-R
Discharge Enthalpy	0	BTU/lb.mole
Entropy Difference	0	BTU/lb.mole-R
Enthalpy Difference	.0001	BTU/lb.mole

*** THROUGHPUT CALCULATIONS ***

Flow Temperature	69.3828	Deg F
Flow Pressure	523.612	psig
EFM Freq.	0	Hz
Throughput	0	MMSCFD
Actual Flow	0	ACFM

*** ENGINE AND FUEL METER CALCULATIONS ***

Engine Power 627.8 HP
Engine Load 62.78 %
Fuel Consumption 83.63 SCFM (5017.52 SCFH)
EPA Stnd. Fuel Cons. 85.11 SCFM (5106.5 SCFH)
Fuel Efficiency 8319 BSFC

*** COMPRESSOR PERFORMANCE PARAMETERS ***

Inlet Air Temp.	0	Deg F
Gas Horsepower	627.839	Hp
Power Turbine Speed	0	Rpm
Q/N	0	
Pressure Coefficient	0	
Adiabatic Efficiency	0	Percent
Hydraulic Efficiency	0	Percent
Hydraulic Head	0	Ft-lbf/lbm

EMISSIONS TEST

STATION # 19 ENGINE# 2 10:39:24

5 Apr 1989

*** GAS CONCENTRATIONS ***

#	INSTRUMENT LABEL	VALUE	UNITS	#	INSTRUMENT LABEL	VALUE	UNITS
3	Outlet NO	39.49	ppm	4	Outlet NOX	76.92	ppm
5	Ambient NO	0	ppm	6	Ambient NOX	0	ppm
7	Inlet CO	0	ppm	8	Inlet CO2	0	%
9	Outlet CO	228.6	ppm	10	Outlet CO2	4.947	%
11	Inlet Total HC	0	ppm	12	Outlet Total HC	27380	ppm
13	Inlet O2	0	%	14	Outlet O2	11.78	%
15	Ambient O2	0	%				

*** ENGINE PARAMETERS ***

#	INSTRUMENT LABEL	VALUE	UNITS	#	INSTRUMENT LABEL	VALUE	UNITS
80	Engine Speed	700.6	RPM	26	Suction (S)	524.8	psig
81	Unused	0	RPM	27	Discharge (S)	754.4	psig
33	Barocel 1	0	InH2O	28	Air Manifold	6.909	psig
34	Barocel 2	0	InH2O	82	Unused	0	HZ
35	Barocel 3	-.8101		83	Unused	0	GPM

*** FUEL TUBE PARAMETERS ***

#	INSTRUMENT LABEL	VALUE	UNITS	#	INSTRUMENT LABEL	VALUE	UNITS
23	Fuel Press.(R)	76.4	psig	24	Fuel Temp.(R)(RTD)	73.69	Deg F
25	Fuel Diff.(R)	26.91	InH2O				

*** TEMPERATURES ***

#	INSTRUMENT LABEL	VALUE	UNITS	#	INSTRUMENT LABEL	VALUE	UNITS
1	Suction Temp.(K)	0	Deg F	2	Discharge Temp.(K)	0	Deg F
3	Exhaust Stack (K)	691.3	Deg F	4	Sample Filter (K)	226	Deg F
5	After Pump (K)	225.9	Deg F	6	Ice Bath (K)	35.97	Deg F
7	Unused	0	Deg F	8	Inlet Air (K)	70.12	Deg F
9	Ambient (K)	67.57	Deg F	10	Unused	0	Deg F
11	Unused	0	Deg F	12	Unused	0	Deg F
13	Unused	0	Deg F	14	Unused	0	Deg F
15	Unused	0	Deg F	16	Unused	0	Deg F
17	Unused	0	Deg F	18	Suction(RTD)	69.41	Deg F
19	Discharge(RTD)	131.7	Deg F				

Barometric Press. 29.88 InHg Specific Gravity .5992

*** SCANNING PERIOD IS 1 MINUTE(S) ***

COMMENTS: Fuel tube 3.068 in. diameter with a .6250 orifice
TOC UNIT #2 WHITE SUPERIOR
EMISSIONS COMPLIANCE TEST

** Concentrations and Parameters compiled using file C0918 **

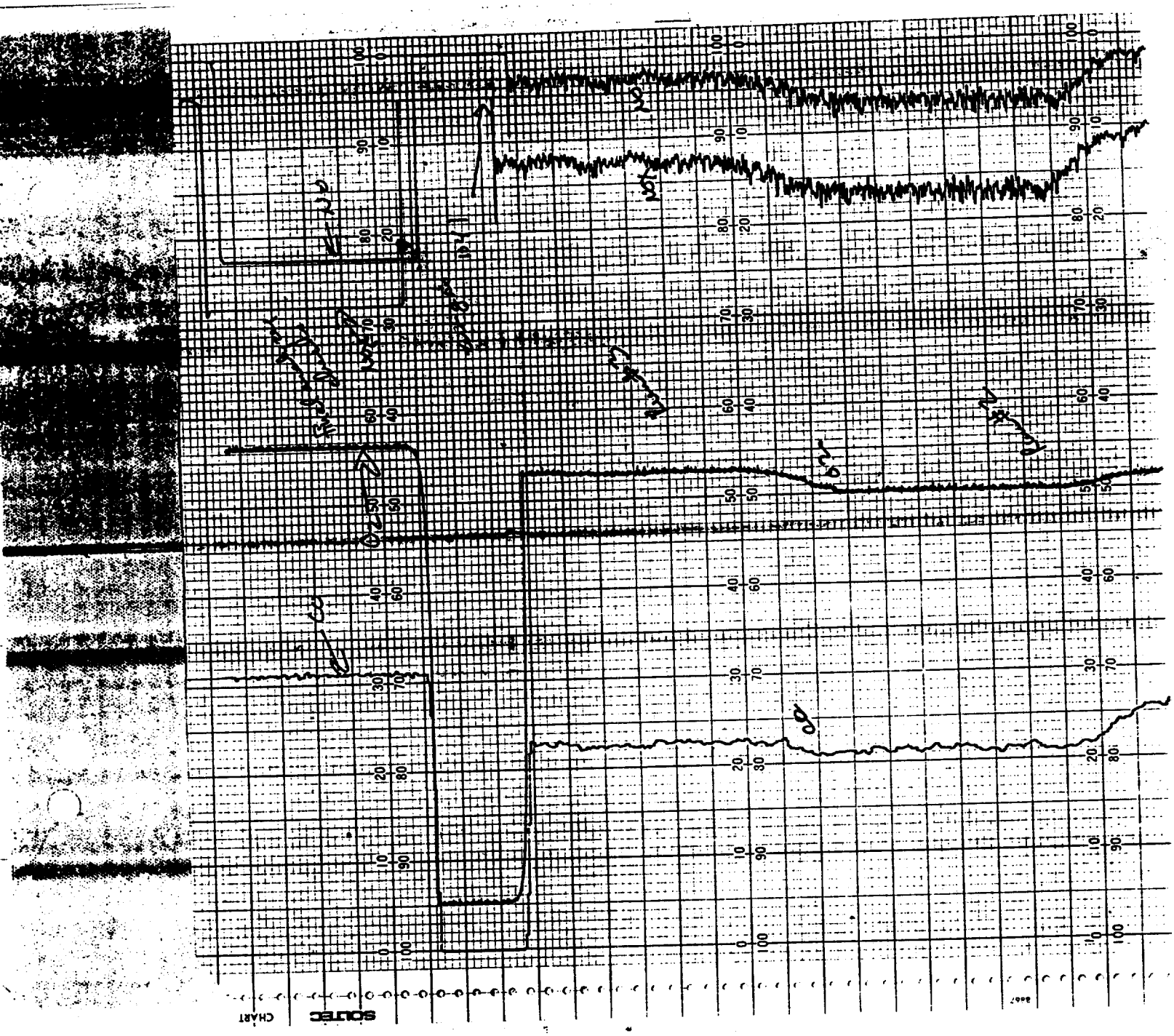
SOLTEC
CHART

APPENDIX C

FUEL SAMPLE ANALYSIS

04/05/89 14:37:16

TENNESSEE GAS PIPELINE
HOUSTON, TEXAS
CERTIFICATE OF ANALYSIS

Sampler Station ID: 00-0000
Station Location: CHESTERVILLE PLANT

Pipeline District:
Chromatograph ID: H1000R

Analysis No.: 130990
Sample Date Removed: 04/05/89
Sampled By: MP
Sample Type: S

Effective Date: 03/01/89
Analyzed Date: 04/05/89
Analyzed By: TGT
Sample Purpose:

Component	Mol %	GPM
Nitrogen	0.64	
Carbon Dioxide	1.78	
Methane	90.93	
Ethane	4.07	1.088
Propane	1.50	0.413
Iso-butane	0.31	0.101
N-butane	0.37	0.117
Iso-pentane	0.14	0.051
N-pentane	0.09	0.033
Hexanes Plus	0.17	0.076

Specific Gravity:	0.6286
Sat BTU @14.730:	1055
Dry BTU @14.730:	1074
Sample Pres (PSIA):	0
Sample Temp (Deg F):	0
Alarm Code:	0

Sat BTU and Dry BTU are calculated at 14.73 PSIA and 60 DEG F

Remarks: CHESTERVILLE NO. 2 (75CC CYLINDER) REC. IN LAB 4/5/89

APPENDIX D

CALIBRATION RESULTS AND PROCEDURES

CALIBRATION

Two types of calibration procedures were used. The first type, system checks, were designed to prove that the complete sampling system operated properly. The second type, accuracy checks, were used to guarantee the accuracy of the test data.

SYSTEM CHECKS

Five types of system checks were used:

1) Leak and sample line integrity checks
2) Analyzer linearity checks
3) NO2 converter efficiency check
4) Interference checks
5) Response time data

LEAK CHECK AND SAMPLE LINE INTEGRITY

The sample line integrity was tested by first introducing a zero gas directly to the NO_x analyzer and the analyzers response allowed to stabilize. A high level calibration NO gas was then directly introduced to the analyzer until a stable response was recorded. Then the same high-level NO calibration gas was introduced through the sample line at the calibration valve and the analyzer response was allowed to stabilize. If the two high-level calibration response values did not vary by more than ±3 percent, the sample line was considered acceptable. The result was a 1.27% response difference using the NO_x analyzer and was recorded on the "SAMPLE LINE INTEGRITY CHECK" datasheet. Copies of the computer printout and applicable strip chart recording are included with the datasheet.

The sample line was be leak checked after the integrity check by closing the calibration valve assembly while the sample pump was operating. Once the maximum vacuum was reached (greater than 25 inches of mercury) the valve on the pressure side of the pump was closed (See Figure III) thus sealing off the vacuum section of the sampling system. A leak test was considered acceptable if the vacuum gauge reading did not drop by an amount greater than 2 inches of mercury over a period of 1 minute. The leak rate was 1 inch of mercury per minute.

LINEARITY CHECKS

The oxygen and oxides of nitrogen analyzers were "zeroed" using zero grade nitrogen and zero air respectively. The analyzers were "spanned" using the mid-level calibration gases. Then the low and high level calibration gases were

introduced to the analyzers one at a time. The analyzers' linearity were be considered acceptable if the actual responses of the low and high level calibration gases were within ±2 percent of the predicted values of a linear curve determined from the zero and mid-level calibration gas responses. Results were recorded on the "NOX ANALYZER LINEARITY CHECK" and "O2 ANALYZER LINEARITY CHECK" datasheets. The results were:

Analyzer	Low Level Gas Difference	High Level Gas Difference
O_2	0.8%	0.3%
NO_x	0.0%	0.4%

NO2 CONVERTER CHECK

A calibration gas mixture of known concentrations of between 40 and 60 ppm nitrogen dioxide (NO_2) and 90 to 110 ppm nitric oxide (NO) with a balance of nitrogen was used. The calibration gas mixture was introduced to the oxides of nitrogen (NO_x) analyzer until a stable response was recorded. The calibration gas was introduced to the back of the analyzer rather than through the calibration/sample valve. The converter was considered acceptable if the instrument response indicates a 90 percent or greater NO_2 to NO conversion. The NO_x analyzer response indicated a response of97.9% which met the required 90 percent required by Method 20 Paragraph 5.6 and was recorded on the "NOX CONVERTER CHECK" datasheet.

INTERFERENCE RESPONSE

Interference response checks were not conducted but instrument vendor data is included in Appendix E (Vendor Data) which demonstrates an acceptable performance.

RESPONSE TIME TESTS

Response time tests were not performed. The residence time was calculated to be less than two seconds. The sample pump had a flow rate of 0.025 SCFS at a 5 PSIG pressure. The volume of the complete sample line assembly was calculated to be .048 cubic feet.

CALIBRATION

A zero and a mid-level gas (high-level gas to NO_x analyzer) were introduced to the analyzers before the test. The analyzers' output responses were set to the

appropriate levels. After the test, calibration consisted of re-introducing the same zero and span gases to the analyzers. The analyzers stabilized response was recorded. No adjustments were made during the final calibration.

The before and after calibrations were used to determine a zero and span drift for the test run period for both the NO_x and O_2 analyzers. The zero and calibration drift for the test run period were 0.85% for the NO_x analyzer and 0.48% for the O_2 analyzer. Results were recorded on the "O2 ANALYZER ZERO AND CALIBRATION DATA" and the "NOX ANALYZER ZERO AND CALIBRATION DATA" datasheets.

O_2 ANALYZER LINEARITY CHECK

Station CHESTERVILLE

Engine #2

Date 4/5/89

Test # 1

Run # 1

Analyzer Beckman Model 755

S/N 1000 483

	CYLINDER #	CYLINDER VALUE O_2 %	INITIAL ANALYZER RESPONSE O_2 %	PERCENT DIFFERENCE
ZERO GAS	AAL 17031	0.00	SCAN TIME 8:00 .01	
MID - LEVEL GAS	ALM 2306	12.57	SCAN TIME 8:11 12.56	
LOW - LEVEL GAS	ALM 2311	6.01	SCAN TIME 8:17 6.06	0.8 %
HIGH - LEVEL GAS	ALM 2302	21.02	SCAN TIME 8:22 21.08	0.3 %

$$\text{Percent Difference} = \frac{\text{Absolute difference}}{\text{span value}} \times 100$$

NOx ANALYZER LINEARITY CHECK

Station CHESTERVILLE

Engine #2

Date 4/5/89

Test # 1

Run # 1

Analyzer TECO Model 10

S/N 10AR-9686-110

	CYLINDER #	CYLINDER VALUE NOx ppm	INITIAL ANALYZER RESPONSE NOx ppm	PERCENT DIFFERENCE
ZERO GAS	ALM 3315	0.00	8:00 .48	
MID - LEVEL GAS	AAL 1360	130.5	8:11 130.5	
LOW - LEVEL GAS	AAL 5037	61.36	8:17 61.34	0.03 %
HIGH - LEVEL GAS	AAL 13585	222.1	~~8:21~~ 8:22 221.2	0.41 %

$$\text{Percent Difference} = \frac{\text{Absolute difference}}{\text{span value}} \times 100$$

NOX CONVERTER CHECK

DATE 4/5/89 STATION CHESTERVILLE

ANALYZER NOx TECO Model 10 S/N 10AR-9686-110

CYLINDER # AAL 17388

CYLINDER CONTENTS:

NO 100.9 ppm

NO2 51.78 ppm

NOx 152.7 ppm

ANALYZER RESPONSE

NOx 148.6 ppm 97.31%

Note – Instrument response level must be at least 90 percent NO2 to NO conversion.

SAMPLE LINE INTEGRITY CHECK

STATION CHESTERVILLE ANALYZER TECO Model 10

DATE 4/5/89 S/N 10AR-9686-110

	NOx Analyzer response	
NOx span gas through the complete calibration system (It)	SCAN TIME 8:22 221.2 ppm	
NOx span gas through the complete sampling system (Ic)	SCAN TIME 8:41 218.4 ppm	
	1.27 %	

$$\text{Response Difference} = \frac{Ic - It}{Ic} \times 100$$

O_2 ANALYZER ZERO AND CALIBRATION DATA

Station CHESTER

Engine #2

Date 4/5/89

Test # 1

Run # 1

Analyzer Beckman Model 755

S/N 1000483

	CYLINDER #	CYLINDER VALUE O_2 %	INITIAL ANALYZER RESPONSE O_2 %	FINAL ANALYZER RESPONSE O_2 %	DIFFERENCE INITIAL – FINAL	PERCENT DRIFT
ZERO GAS	AAL17031	0.00	SCAN TIME 8:00 .01	SCAN TIME 10:48 .04	.03	
MID – LEVEL GAS	AUM 2306	12.57	SCAN TIME 8:11 12.56	SCAN TIME 12.62	.06	.48 %

$$\text{Percent Difference} = \frac{\text{Absolute difference}}{\text{span value}} \times 100$$

NOX ANALYZER ZERO AND CALIBRATION DATA

Station CHESTERVILLE

Engine #2

Date 4/5/89

Test # 1

Run # 1

Analyzer TECO Model 10

S/N 10AR-9686-110

	CYLINDER #	CYLINDER VALUE NOX ppm	INITIAL ANALYZER RESPONSE NOX ppm	FINAL ANALYZER RESPONSE NOX ppm	DIFFERENCE INITIAL – FINAL	PERCENT DRIFT
ZERO GAS	ACM 3315	0.00	SCAN TIME 8:00 .48	SCAN TIME 10:48 .84	.36	
~~MID~~ HIGH – LEVEL GAS	AAL13585	222.1	SCAN TIME 8:22 221.2	SCAN TIME 10:53 219.3	~~.89~~ 1.9	.85%

$$\text{Percent Difference} = \frac{\text{Absolute difference}}{\text{span value}} \times 100$$

linearity
zero

EMISSIONS TEST

STATION # 19 ENGINE# 2

5 Apr 1989 08:00:07

*** GAS CONCENTRATIONS ***

#	INSTRUMENT LABEL	VALUE	UNITS	#	INSTRUMENT LABEL	VALUE	UNITS
3	Outlet NO	.905	ppm	4	Outlet NOX	.4752	ppm
5	Ambient NO	0	ppm	6	Ambient NOX	0	ppm
7	Inlet CO	0	ppm	8	Inlet CO2	0	%
9	Outlet CO	-.02888	ppm	10	Outlet CO2	-.00115	%
11	Inlet Total HC	0	ppm	12	Outlet Total HC	-4.472	ppm
13	Inlet O2	0	%	14	Outlet O2	.01139	%
15	Ambient O2	0	%				

*** ENGINE PARAMETERS ***

#	INSTRUMENT LABEL	VALUE	UNITS	#	INSTRUMENT LABEL	VALUE	UNITS
80	Engine Speed	0	RPM	26	Suction (S)	.4665	psig
81	Unused	0	RPM	27	Discharge (S)	.2291	psig
33	Barocel 1	0	InH2O	28	Air Manifold	-.00028	psig
34	Barocel 2	0	InH2O	82	Unused	0	HZ
35	Barocel 3	-3.169		83	Unused	0	GPM

B

*** FUEL TUBE PARAMETERS ***

#	INSTRUMENT LABEL	VALUE	UNITS	#	INSTRUMENT LABEL	VALUE	UNITS
23	Fuel Press.(R)	-.00127	psig	24	Fuel Temp.(R)(RTD)	66.21	Deg F
25	Fuel Diff.(R)	1.E-5	InH2O				

*** TEMPERATURES ***

#	INSTRUMENT LABEL	VALUE	UNITS	#	INSTRUMENT LABEL	VALUE	UNITS
1	Suction Temp.(K)	0	Deg F	2	Discharge Temp.(K)	0	Deg F
3	Exhaust Stack (K)	791.8	Deg F	4	Sample Filter (K)	181.5	Deg F
5	After Pump (K)	182.1	Deg F	6	Ice Bath (K)	35.08	Deg F
7	Unused	0	Deg F	8	Inlet Air (K)	58.41	Deg F
9	Ambient (K)	60.67	Deg F	10	Unused	0	Deg F
11	Unused	0	Deg F	12	Unused	0	Deg F
13	Unused	0	Deg F	14	Unused	0	Deg F
15	Unused	0	Deg F	16	Unused	0	Deg F
17	Unused	0	Deg F	18	Suction(RTD)	59.84	Deg F
19	Discharge(RTD)	66.09	Deg F				

Barometric Press. 29.88 InHg Specific Gravity .5992

*** SCANNING PERIOD IS 1 MINUTE(S) ***

COMMENTS: Fuel tube 3.068 in. diameter with a .6250 orifice
TOC UNIT #2 WHITE SUPERIOR
EMISSIONS COMPLIANCE TEST
** Concentrations and Parameters compiled using file C0755 **

linearity
mid-level

EMISSIONS TEST

STATION # 19 ENGINE# 2

5 Apr 1989 08:11:44

*** GAS CONCENTRATIONS ***

#	INSTRUMENT LABEL	VALUE	UNITS	#	INSTRUMENT LABEL	VALUE	UNITS
3	Outlet NO	130.2	ppm	4	Outlet NOX	130.5	ppm
5	Ambient NO	0	ppm	6	Ambient NOX	0	ppm
7	Inlet CO	0	ppm	8	Inlet CO2	0	%
9	Outlet CO	317	ppm	10	Outlet CO2	2.002	%
11	Inlet Total HC	0	ppm	12	Outlet Total HC	584.6	ppm
13	Inlet O2	0	%	14	Outlet O2	12.56	%
15	Ambient O2	0	%				

*** ENGINE PARAMETERS ***

#	INSTRUMENT LABEL	VALUE	UNITS	#	INSTRUMENT LABEL	VALUE	UNITS
80	Engine Speed	0	RPM	26	Suction (S)	496.9	psig
31	Unused	0	RPM	27	Discharge (S)	788.8	psig
33	Barocel 1	0	InH2O	28	Air Manifold	10.75	psig
34	Barocel 2	0	InH2O	82	Unused	0	HZ
35	Barocel 3	.08303		83	Unused	0	GPM

*** FUEL TUBE PARAMETERS ***

#	INSTRUMENT LABEL	VALUE	UNITS	#	INSTRUMENT LABEL	VALUE	UNITS
23	Fuel Press.(R)	-.02277	psig	24	Fuel Temp.(R)(RTD)	64.23	Deg F
25	Fuel Diff.(R)	.02346	InH2O				

*** TEMPERATURES ***

#	INSTRUMENT LABEL	VALUE	UNITS	#	INSTRUMENT LABEL	VALUE	UNITS
1	Suction Temp.(K)	0	Deg F	2	Discharge Temp.(K)	0	Deg F
3	Exhaust Stack (K)	791.8	Deg F	4	Sample Filter (K)	188.4	Deg F
5	After Pump (K)	187.1	Deg F	6	Ice Bath (K)	37.23	Deg F
7	Unused	0	Deg F	8	Inlet Air (K)	58.46	Deg F
9	Ambient (K)	61.06	Deg F	10	Unused	0	Deg F
11	Unused	0	Deg F	12	Unused	0	Deg F
13	Unused	0	Deg F	14	Unused	0	Deg F
15	Unused	0	Deg F	16	Unused	0	Deg F
17	Unused	0	Deg F	18	Suction(RTD)	65.5	Deg F
19	Discharge(RTD)	147.2	Deg F				

Barometric Press. 29.88 InHg Specific Gravity .5992

*** SCANNING PERIOD IS 1 MINUTE(S) ***

COMMENTS: Fuel tube 3.068 in. diameter with a .6250 orifice
TOC UNIT #2 WHITE SUPERIOR
EMISSIONS COMPLIANCE TEST

** Concentrations and Parameters compiled using file C0810 **

Uncertainty low level check

EMISSIONS TEST

STATION # 19 ENGINE# 2 08:17:20

5 Apr 1989

*** GAS CONCENTRATIONS ***

#	INSTRUMENT LABEL	VALUE	UNITS	#	INSTRUMENT LABEL	VALUE	UNITS
3	Outlet NO	61.7	ppm	4	Outlet NOX	61.34	ppm
5	Ambient NO	0	ppm	6	Ambient NOX	0	ppm
7	Inlet CO	0	ppm	8	Inlet CO2	0	%
9	Outlet CO	-.1055	ppm	10	Outlet CO2	.07724	%
11	Inlet Total HC	0	ppm	12	Outlet Total HC	327.1	ppm
13	Inlet O2	0	%	14	Outlet O2	6.057	%
15	Ambient O2	0	%				

*** ENGINE PARAMETERS ***

#	INSTRUMENT LABEL	VALUE	UNITS	#	INSTRUMENT LABEL	VALUE	UNITS
80	Engine Speed	0	RPM	26	Suction (S)	497	psig
81	Unused	0	RPM	27	Discharge (S)	789.1	psig
33	Barocel 1	0	InH2O	28	Air Manifold	10.77	psig
34	Barocel 2	0	InH2O	82	Unused	0	HZ
35	Barocel 3	-.624		83	Unused	0	GPM

*** FUEL TUBE PARAMETERS ***

#	INSTRUMENT LABEL	VALUE	UNITS	#	INSTRUMENT LABEL	VALUE	UNITS
23	Fuel Press.(R)	-.02321	psig	24	Fuel Temp.(R)(RTD)	63.55	Deg F
25	Fuel Diff.(R)	.02597	InH2O				

*** TEMPERATURES ***

#	INSTRUMENT LABEL	VALUE	UNITS	#	INSTRUMENT LABEL	VALUE	UNITS
1	Suction Temp.(K)	0	Deg F	2	Discharge Temp.(K)	0	Deg F
3	Exhaust Stack (K)	792.7	Deg F	4	Sample Filter (K)	188.9	Deg F
5	After Pump (K)	189	Deg F	6	Ice Bath (K)	36.76	Deg F
7	Unused	0	Deg F	8	Inlet Air (K)	58.55	Deg F
9	Ambient (K)	61.33	Deg F	10	Unused	0	Deg F
11	Unused	0	Deg F	12	Unused	0	Deg F
13	Unused	0	Deg F	14	Unused	0	Deg F
15	Unused	0	Deg F	16	Unused	0	Deg F
17	Unused	0	Deg F	18	Suction(RTD)	65.53	Deg F
19	Discharge(RTD)	147.2	Deg F				

Barometric Press. 29.88 InHg Specific Gravity .5992

*** SCANNING PERIOD IS 1 MINUTE(S) ***

COMMENTS: Fuel tube 3.068 in. diameter with a .6250 orifice
TOC UNIT #2 WHITE SUPERIOR
EMISSIONS COMPLIANCE TEST
** Concentrations and Parameters compiled using file C0810 **

uncertain high level check

EMISSIONS TEST

STATION # 19 ENGINE# 2 08:22:05

5 Apr 1989

*** GAS CONCENTRATIONS ***

#	INSTRUMENT LABEL	VALUE	UNITS	#	INSTRUMENT LABEL	VALUE	UNITS
3	Outlet NO	221.3	ppm	4	Outlet NOX	221.2	ppm
5	Ambient NO	0	ppm	6	Ambient NOX	0	ppm
7	Inlet CO	0	ppm	8	Inlet CO2	0	%
9	Outlet CO	-.09837	ppm	10	Outlet CO2	.03795	%
11	Inlet Total HC	0	ppm	12	Outlet Total HC	223	ppm
13	Inlet O2	0	%	14	Outlet O2	21.08	%
15	Ambient O2	0	%				

*** ENGINE PARAMETERS ***

#	INSTRUMENT LABEL	VALUE	UNITS	#	INSTRUMENT LABEL	VALUE	UNITS
80	Engine Speed	0	RPM	26	Suction (S)	497.4	psig
81	Unused	0	RPM	27	Discharge (S)	788.4	psig
33	Barocel 1	0	InH2O	28	Air Manifold	10.79	psig
34	Barocel 2	0	InH2O	82	Unused	0	HZ
35	Barocel 3	-.4005		83	Unused	0	GPM

*** FUEL TUBE PARAMETERS ***

#	INSTRUMENT LABEL	VALUE	UNITS	#	INSTRUMENT LABEL	VALUE	UNITS
23	Fuel Press.(R)	-.01887	psig	24	Fuel Temp.(R)(RTD)	63.13	Deg F
25	Fuel Diff.(R)	.02528	InH2O				

*** TEMPERATURES ***

#	INSTRUMENT LABEL	VALUE	UNITS	#	INSTRUMENT LABEL	VALUE	UNITS
1	Suction Temp.(K)	0	Deg F	2	Discharge Temp.(K)	0	Deg F
3	Exhaust Stack (K)	793.4	Deg F	4	Sample Filter (K)	189.5	Deg F
5	After Pump (K)	189.4	Deg F	6	Ice Bath (K)	36.47	Deg F
7	Unused	0	Deg F	8	Inlet Air (K)	59.01	Deg F
9	Ambient (K)	61.74	Deg F	10	Unused	0	Deg F
11	Unused	0	Deg F	12	Unused	0	Deg F
13	Unused	0	Deg F	14	Unused	0	Deg F
15	Unused	0	Deg F	16	Unused	0	Deg F
17	Unused	0	Deg F	18	Suction(RTD)	65.58	Deg F
19	Discharge(RTD)	147.2	Deg F				

Barometric Press. 29.88 InHg Specific Gravity .5992

*** SCANNING PERIOD IS 1 MINUTE(S) ***

COMMENTS: Fuel tube 3.068 in. diameter with a .6250 orifice
TOC UNIT #2 WHITE SUPERIOR
EMISSIONS COMPLIANCE TEST

** Concentrations and Parameters compiled using file C0810 **

NOX converter check

EMISSIONS TEST

STATION # 19 ENGINE# 2

5 Apr 1989 08:31:59

*** GAS CONCENTRATIONS ***

#	INSTRUMENT LABEL	VALUE	UNITS	#	INSTRUMENT LABEL	VALUE	UNITS
3	Outlet NO	101.2	ppm	4	Outlet NOX	148.6	ppm
5	Ambient NO	0	ppm	6	Ambient NOX	0	ppm
7	Inlet CO	0	ppm	8	Inlet CO2	0	%
9	Outlet CO	-.1294	ppm	10	Outlet CO2	.03468	%
11	Inlet Total HC	0	ppm	12	Outlet Total HC	281.3	ppm
13	Inlet O2	0	%	14	Outlet O2	19.16	%
15	Ambient O2	0	%				

*** ENGINE PARAMETERS ***

#	INSTRUMENT LABEL	VALUE	UNITS	#	INSTRUMENT LABEL	VALUE	UNITS
80	Engine Speed	0	RPM	26	Suction (S)	498.6	psig
81	Unused	0	RPM	27	Discharge (S)	799.6	psig
33	Barocel 1	0	InH2O	28	Air Manifold	10.74	psig
34	Barocel 2	0	InH2O	82	Unused	0	HZ
35	Barocel 3	-.1465		83	Unused	0	GPM

*** FUEL TUBE PARAMETERS ***

#	INSTRUMENT LABEL	VALUE	UNITS	#	INSTRUMENT LABEL	VALUE	UNITS
23	Fuel Press.(R)	-.02347	psig	24	Fuel Temp.(R)(RTD)	62.74	Deg F
25	Fuel Diff.(R)	.02467	InH2O				

*** TEMPERATURES ***

#	INSTRUMENT LABEL	VALUE	UNITS	#	INSTRUMENT LABEL	VALUE	UNITS
1	Suction Temp.(K)	0	Deg F	2	Discharge Temp.(K)	0	Deg F
3	Exhaust Stack (K)	792.4	Deg F	4	Sample Filter (K)	191.3	Deg F
5	After Pump (K)	191.6	Deg F	6	Ice Bath (K)	35.63	Deg F
7	Unused	0	Deg F	8	Inlet Air (K)	59.39	Deg F
9	Ambient (K)	61.77	Deg F	10	Unused	0	Deg F
11	Unused	0	Deg F	12	Unused	0	Deg F
13	Unused	0	Deg F	14	Unused	0	Deg F
15	Unused	0	Deg F	16	Unused	0	Deg F
17	Unused	0	Deg F	18	Suction(RTD)	65.64	Deg F
19	Discharge(RTD)	148.6	Deg F				

Barometric Press. 29.88 InHg Specific Gravity .5992

*** SCANNING PERIOD IS 1 MINUTE(S) ***

COMMENTS: Fuel tube 3.068 in. diameter with a .6250 orifice
TOC UNIT #2 WHITE SUPERIOR
EMISSIONS COMPLIANCE TEST

** Concentrations and Parameters compiled using file C0810 **

sample line integrity check

EMISSIONS TEST

STATION # 19 ENGINE# 2

5 Apr 1989 08:41:33

*** GAS CONCENTRATIONS ***

#	INSTRUMENT LABEL	VALUE	UNITS	#	INSTRUMENT LABEL	VALUE	UNITS
3	Outlet NO	220.9	ppm	4	Outlet NOX	218.4	ppm
5	Ambient NO	0	ppm	6	Ambient NOX	0	ppm
7	Inlet CO	0	ppm	8	Inlet CO2	0	%
9	Outlet CO	-.1151	ppm	10	Outlet CO2	.03599	%
11	Inlet Total HC	0	ppm	12	Outlet Total HC	-41.25	ppm
13	Inlet O2	0	%	14	Outlet O2	20.78	%
15	Ambient O2	0	%				

*** ENGINE PARAMETERS ***

#	INSTRUMENT LABEL	VALUE	UNITS	#	INSTRUMENT LABEL	VALUE	UNITS
80	Engine Speed	0	RPM	26	Suction (S)	498.5	psig
81	Unused	0	RPM	27	Discharge (S)	796.7	psig
33	Barocel 1	0	InH20	28	Air Manifold	10.73	psig
34	Barocel 2	0	InH20	82	Unused	0	HZ
35	Barocel 3	-.2298		83	Unused	0	GPM

*** FUEL TUBE PARAMETERS ***

#	INSTRUMENT LABEL	VALUE	UNITS	#	INSTRUMENT LABEL	VALUE	UNITS
23	Fuel Press.(R)	-.02069	psig	24	Fuel Temp.(R)(RTD)	62.68	Deg F
25	Fuel Diff.(R)	.02467	InH20				

*** TEMPERATURES ***

#	INSTRUMENT LABEL	VALUE	UNITS	#	INSTRUMENT LABEL	VALUE	UNITS
1	Suction Temp.(K)	0	Deg F	2	Discharge Temp.(K)	0	Deg F
3	Exhaust Stack (K)	792	Deg F	4	Sample Filter (K)	206.6	Deg F
5	After Pump (K)	190.6	Deg F	6	Ice Bath (K)	34.7	Deg F
7	Unused	0	Deg F	8	Inlet Air (K)	59.84	Deg F
9	Ambient (K)	62.85	Deg F	10	Unused	0	Deg F
11	Unused	0	Deg F	12	Unused	0	Deg F
13	Unused	0	Deg F	14	Unused	0	Deg F
15	Unused	0	Deg F	16	Unused	0	Deg F
17	Unused	0	Deg F	18	Suction(RTD)	65.7	Deg F
19	Discharge(RTD)	149.1	Deg F				

Barometric Press. 29.88 InHg Specific Gravity .5992

*** SCANNING PERIOD IS 1 MINUTE(S) ***

COMMENTS: Fuel tube 3.068 in. diameter with a .6250 orifice
TOC UNIT #2 WHITE SUPERIOR
EMISSIONS COMPLIANCE TEST

** Concentrations and Parameters compiled using file C0810 **

blue ink cartridge ran out at 10:40 change to black

analyzer drift check zero gas

EMISSIONS TEST

STATION # 19 ENGINE# 2

5 Apr 1989 10:48:07

*** GAS CONCENTRATIONS ***

#	INSTRUMENT LABEL	VALUE	UNITS	#	INSTRUMENT LABEL	VALUE	UNITS
3	Outlet NO	1.382	ppm	4	Outlet NOX	.836	ppm
5	Ambient NO	0	ppm	6	Ambient NOX	0	ppm
7	Inlet CO	0	ppm	8	Inlet CO2	0	%
9	Outlet CO	-.1181	ppm	10	Outlet CO2	-.02853	%
11	Inlet Total HC	0	ppm	12	Outlet Total HC	-58.92	ppm
13	Inlet O2	0	%	14	Outlet O2	.04184	%
15	Ambient O2	0	%				

*** ENGINE PARAMETERS ***

#	INSTRUMENT LABEL	VALUE	UNITS	#	INSTRUMENT LABEL	VALUE	UNITS
80	Engine Speed	701.3	RPM	26	Suction (S)	1.56	psig
81	Unused	0	RPM	27	Discharge (S)	752.1	psig
33	Barocel 1	0	InH2O	28	Air Manifold	6.932	psig
34	Barocel 2	0	InH2O	82	Unused	0	HZ
35	Barocel 3	-.7421		83	Unused	0	GPM

*** FUEL TUBE PARAMETERS ***

#	INSTRUMENT LABEL	VALUE	UNITS	#	INSTRUMENT LABEL	VALUE	UNITS
23	Fuel Press.(R)	76.02	psig	24	Fuel Temp.(R)(RTD)	74.31	Deg F
25	Fuel Diff.(R)	26.94	InH2O				

*** TEMPERATURES ***

#	INSTRUMENT LABEL	VALUE	UNITS	#	INSTRUMENT LABEL	VALUE	UNITS
1	Suction Temp.(K)	0	Deg F	2	Discharge Temp.(K)	0	Deg F
3	Exhaust Stack (K)	691.3	Deg F	4	Sample Filter (K)	177.7	Deg F
5	After Pump (K)	223.1	Deg F	6	Ice Bath (K)	35.94	Deg F
7	Unused	0	Deg F	8	Inlet Air (K)	71.45	Deg F
9	Ambient (K)	67.97	Deg F	10	Unused	0	Deg F
11	Unused	0	Deg F	12	Unused	0	Deg F
13	Unused	0	Deg F	14	Unused	0	Deg F
15	Unused	0	Deg F	16	Unused	0	Deg F
17	Unused	0	Deg F	18	Suction(RTD)	69.45	Deg F
19	Discharge(RTD)	131.2	Deg F				

Barometric Press. 29.88 InHg Specific Gravity .5992

*** SCANNING PERIOD IS 1 MINUTE(S) ***

COMMENTS: Fuel tube 3.068 in. diameter with a .6250 orifice
TOC UNIT #2 WHITE SUPERIOR
EMISSIONS COMPLIANCE TEST

** Concentrations and Parameters compiled using file C0918 **

NOX & O2 drift check span gas

EMISSIONS TEST

STATION # 19 ENGINE# 2

5 Apr 1989 10:53:56

*** GAS CONCENTRATIONS ***

#	INSTRUMENT LABEL	VALUE	UNITS	#	INSTRUMENT LABEL	VALUE	UNITS
3	Outlet NO	221.2	ppm	4	Outlet NOX	219.3	ppm
5	Ambient NO	0	ppm	6	Ambient NOX	0	ppm
7	Inlet CO	0	ppm	8	Inlet CO2	0	%
9	Outlet CO	309.9	ppm	10	Outlet CO2	1.857	%
11	Inlet Total HC	0	ppm	12	Outlet Total HC	-64.64	ppm
13	Inlet O2	0	%	14	Outlet O2	12.62	%
15	Ambient O2	0	%				

*** ENGINE PARAMETERS ***

#	INSTRUMENT LABEL	VALUE	UNITS	#	INSTRUMENT LABEL	VALUE	UNITS
80	Engine Speed	699.2	RPM	26	Suction (S)	2.292	psig
81	Unused	0	RPM	27	Discharge (S)	1.555	psig
33	Barocel 1	0	InH2O	28	Air Manifold	6.899	psig
34	Barocel 2	0	InH2O	82	Unused	0	HZ
35	Barocel 3	.3833		83	Unused	0	GPM

*** FUEL TUBE PARAMETERS ***

#	INSTRUMENT LABEL	VALUE	UNITS	#	INSTRUMENT LABEL	VALUE	UNITS
23	Fuel Press.(R)	3.264	psig	24	Fuel Temp.(R)(RTD)	73.9	Deg F
25	Fuel Diff.(R)	8.72	InH2O				

*** TEMPERATURES ***

#	INSTRUMENT LABEL	VALUE	UNITS	#	INSTRUMENT LABEL	VALUE	UNITS
1	Suction Temp.(K)	0	Deg F	2	Discharge Temp.(K)	0	Deg F
3	Exhaust Stack (K)	693.2	Deg F	4	Sample Filter (K)	160.1	Deg F
5	After Pump (K)	222.4	Deg F	6	Ice Bath (K)	35.68	Deg F
7	Unused	0	Deg F	8	Inlet Air (K)	72.67	Deg F
9	Ambient (K)	68.36	Deg F	10	Unused	0	Deg F
11	Unused	0	Deg F	12	Unused	0	Deg F
13	Unused	0	Deg F	14	Unused	0	Deg F
15	Unused	0	Deg F	16	Unused	0	Deg F
17	Unused	0	Deg F	18	Suction(RTD)	67.72	Deg F
19	Discharge(RTD)	119.2	Deg F				

Barometric Press. 29.88 InHg Specific Gravity .5992

*** SCANNING PERIOD IS 1 MINUTE(S) ***

COMMENTS: Fuel tube 3.068 in. diameter with a .6250 orifice
TOC UNIT #2 WHITE SUPERIOR
EMISSIONS COMPLIANCE TEST

** Concentrations and Parameters compiled using file C0918 **

SOLTEC
CHART NO. ZK1-01-26-20M

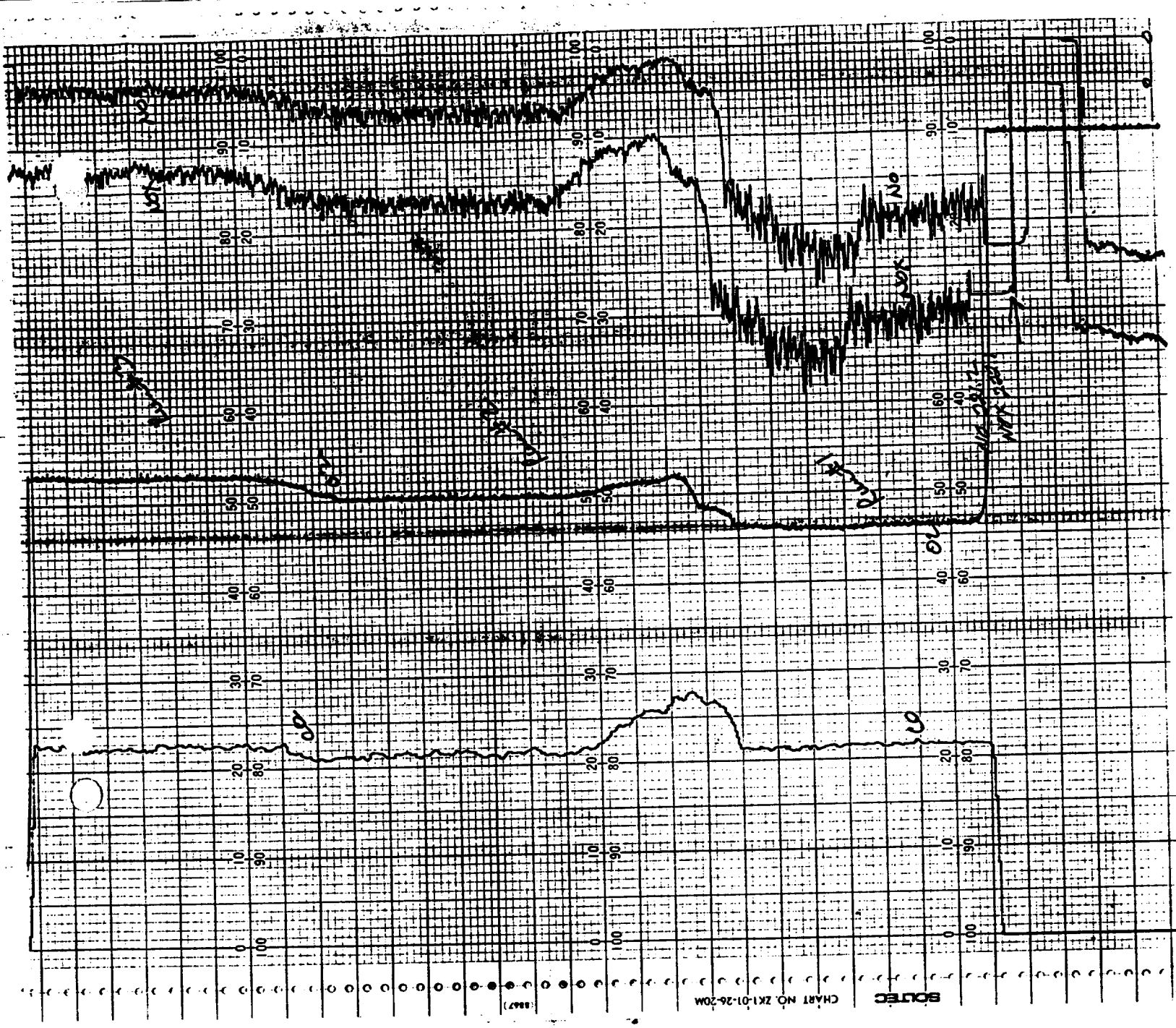
SOLTEC
CHART NO. ZK1-01-26-20M

TENNECO GAS TRANSPORTATION
TECHNICAL SERVICES DEPARTMENT
MECHANICAL SECTION
5510 South Rice Avenue, Houston, TX 77081 (713) 662-5325

******SUMMARY OF CALIBRATION VALUES******

5 Apr 1989
09:18:24

STATION #19
ENGINE #2

#	INSTRUMENT LABEL	ZERO VALUE	ZERO VOLTS	SPAN VALUE	SPAN VOLTS	CAL. SLOPE	Y INTCPT
1	Flow Differential	0	.4491	502.3	10	52.59	-23.62
2	Inlet NOX	0	0	504.1	10	50.41	0
3	Outlet NO	0	.002629	221.2	2.271	97.53	-.2564
4	Outlet NOX	0	.004603	222.1	2.34	95.12	-.4379
5	Ambient NO	0	0	2.479	10	.2479	0
6	Ambient NOX	0	0	2.508	10	.2508	0
7	Inlet CO	0	0	398	5	79.6	0
8	Inlet CO2	0	0	4.517	5	.9034	0
9	Outlet CO	0	-.00369	317	3.186	99.38	.3668
10	Outlet CO2	0	.07107	2	1.041	2.063	-.1466
11	Inlet Total HC	0	0	3537	-5	-707.4	0
12	Outlet Total HC	0	.02772	958	.1886	5953	-165
13	Inlet O2	0	0	4.951	5	.9902	0
14	Outlet O2	0	.002104	12.57	2.551	4.931	-.0103
15	Ambient O2	0	0	20.92	5	4.184	0
16	Unused	0	.1629	36.25	1.336	30.91	-5.036
17	Unused	0	0	20	10	2	0
18	EFM Freq	0	0	20	10	2	0
19	Unused	0	0	20	10	2	0
20	GP SPEED	0	0	300	10	30	0
21	Unused	0	0	800	10	80	0
22	Unused	0	13.69	3.054	13.94	12.16	-166.5
23	Fuel Press.(R)	0	1.002	50	1.722	69.44	-69.57
24	Fuel Temp.(R)(RTD)	32.46	1	183.3	5	37.71	-5.25
25	Fuel Diff.(R)	0	1.006	94	4.801	24.77	-24.93
26	Suction (S)	0	-.01317	791.5	2.632	299.2	3.941
27	Discharge (S)	0	-.01068	791.5	2.628	300	3.202
28	Air Manifold	0	.01015	10.83	3.584	3.03	-.0307
29	Unused	0	0	1000	10	100	0
30	Unused	0	0	1000	10	100	0
31	Unused	0	0	1000	10	100	0
32	Unused	0	0	1000	10	100	0
33	Barocel 1	0	-.2258	3.39	9.179	.3605	.08138
34	Barocel 2	0	0	1	6.43	.1555	0
35	Barocel 3	0	0	100	10	10	0
36	Engine Power	0	0	1000	10	100	0
37	Fuel Consumption	0	0	1000	10	100	0
38	Fuel Efficiency	0	0	1000	10	100	0
39	Engine Load	0	0	1000	10	100	0
40	Pockets	0	0	1000	10	100	0

COMMENTS: Fuel tube 3.068 in. diameter with a .6250 orifice
TOC UNIT #2 WHITE SUPERIOR
EMISSIONS COMPLIANCE TEST

APPENDIX E

VENDOR DATA

This appendix contains documentation concerning the calibration gases used for the gas analyzers. Also included are letters from TECO and Beckman, respective manufacturers of the NO_x and O_2 analyzers, attesting to the lack of inteference by gases other than NO_x and O_2.

TELEX: 510-100-8831 (ScotGas)
FAX: 714-887-0549
PHONE: 714-887-2571

Scott Specialty Gases a division of

Scott Environmental Technology Inc. 2600 CAJON BLVD., SAN BERNARDINO, CA 92405

Shipped From Scott SAN BERNARDINO, CA
Date Shipped November 18, 1988
Our Project No: 414608
Your P.O. No: 19160-MED
Page 1 of 1
Expiration Date: 5/18/90

TENNESSEE GAS PIPELINE
ATTN: MIKE PETERSON

CERTIFICATE OF ANALYSIS—EPA PROTOCOL GASES*

Certified Per Traceability Protocol No. 1 Procedure No. G1 Cylinder No. ALM-2302 Cylinder Pressure 1900 psig Certified Accuracy ±1 % NBS Traceable

REFERENCE STD					GAS ANALYZER		
COMPONENTS	CERTIFIED CONC	SRM/CRM NO.	CYL. NO.	CONC.	MAKE/MODEL/SERIAL NO.	LAST CAL. DATE	ANALYTICAL PRINCIPLE
OXYGEN	21.02%	CRM 2659	AAL-18588	20.67%	BECKMAN/ 755/ 100410	8/16/88	PARAMAGNETIC

BALANCE GAS NITROGEN

ANALYZER READINGS: Z = Zero Gas T = Test Gas R = Reference Gas

Component OXYGEN
First Analysis Date 11/4/88 Units %
Z 00.0 R 82.7 T 84.1
R 82.7 Z 00.0 T 84.1
Z 00.0 T 84.1 R 82.7
Mean Test Assay 21.02%

Second Analysis Date ____ Units ____
Z ____ R ____ T ____
R ____ Z ____ T ____
Z ____ T ____ R ____
Mean Test Assay ____

Component ____
Date ____ Units ____
Z ____ R ____ T ____
R ____ Z ____ T ____
Z ____ T ____ R ____
Mean Test Assay ____

Date ____ Units ____
Z ____ R ____ T ____
R ____ Z ____ T ____
Z ____ T ____ R ____
Mean Test Assay ____

Component ____
Date ____ Units ____
Z ____ R ____ T ____
R ____ Z ____ T ____
Z ____ T ____ R ____
Mean Test Assay ____

Date ____ Units ____
Z ____ R ____ T ____
R ____ Z ____ T ____
Z ____ T ____ R ____
Mean Test Assay ____

Chronology: Date ____
Assay ____

Analyst MAYNARD JOHNSON

Approved By: [signature]

TELEX: 510-100-8831 (ScotGas)
FAX: 714-887-0549
PHONE: 714-887-2571

Scott Specialty Gases a division of

Scott Environmental Technology Inc. 2600 CAJON BLVD., SAN BERNARDINO, CA 92405

Shipped From: Scott SAN BERNARDINO, CA
Date Shipped November 18, 1988
Our Project No: 414608
Your P.O. No: 19160-MED
Page 1 of 1
Expiration Date: 5/18/90

TENNESSEE GAS PIPELINE
ATTN: MIKE PETERSON

CERTIFICATE OF ANALYSIS—EPA PROTOCOL GASES*

Certified Per Traceability Protocol No. 1 Procedure No. G1 Cylinder No. ALM-2306 Cylinder Pressure 1900 psig Certified Accuracy ±1 % NBS Traceable

REFERENCE STD					GAS ANALYZER		
COMPONENTS	CERTIFIED CONC	SRM/CRM NO.	CYL. NO.	CONC.	MAKE/MODEL/SERIAL NO.	LAST CAL. DATE	ANALYTICAL PRINCIPLE
OXYGEN	12.57%	CRM 2659	AAL-18588	20.67%	BECKMAN/ 755/ 100410	8/16/88	PARAMAGNETIC

BALANCE GAS NITROGEN

ANALYZER READINGS: Z = Zero Gas T = Test Gas R = Reference Gas

Component OXYGEN
First Analysis Date 11/4/88 Units %

Z 00.0	R 82.7	T 50.3
R 82.7	Z 00.0	T 50.3
Z 00.0	T 50.3	R 82.7

Mean Test Assay 12.57%

Second Analysis Date _____ Units _____

Z	R	T
R	Z	T
Z	T	R

Mean Test Assay _____

Component _____
Date _____ Units _____

Z	R	T
R	Z	T
Z	T	R

Mean Test Assay _____

Date _____ Units _____

Z	R	T
R	Z	T
Z	T	R

Mean Test Assay _____

Component _____
Date _____ Units _____

Z	R	T
R	Z	T
Z	T	R

Mean Test Assay _____

Date _____ Units _____

Z	R	T
R	Z	T
Z	T	R

Mean Test Assay _____

Chronology: Date _____
Assay _____

Analyst MAYNARD JOHNSON

Approved By: [signature]

TELEX: 510-100-8831 (ScotGas)
FAX: 714-887-0549
PHONE: 714-887-2571

Scott Specialty Gases a division of

Scott Environmental Technology Inc. 2600 CAJON BLVD., SAN BERNARDINO, CA 92405

Shipped From Scott SAN BERNARDINO, CA
Date Shipped November 18,1988
Our Project No: 414608
Your P.O. No: 19160-MED
Page 1 of 1
Expiration Date: 5/18/90

TENNESSEE GAS PIPELINE
ATTN: MIKE PETERSON

CERTIFICATE OF ANALYSIS—EPA PROTOCOL GASES*

Certified Per Traceability Protocol No. 1 Procedure No. G1 Cylinder No. ALM-2311 Cylinder Pressure 1900 psig Certified Accuracy ±1 % NBS Traceable

REFERENCE STD

COMPONENTS	CERTIFIED CONC	SRM/CRM NO.	CYL. NO.	CONC.
OXYGEN	6.010%	CRM 2658	AAL-18523	10.08%

GAS ANALYZER

MAKE/MODEL/SERIAL NO.	LAST CAL. DATE	ANALYTICAL PRINCIPLE
BECKMAN/ 755/ 100410	8/16/88	PARAMAGNETIC

BALANCE GAS NITROGEN

ANALYZER READINGS: Z = Zero Gas T = Test Gas R = Reference Gas

Component OXYGEN
First Analysis Date 11/4/88 Units %

Z 00.0	R 97.4	T 58.0
R 97.4	Z 00.0	T 58.0
Z 00.0	T 58.0	R 97.4

Mean Test Assay 6.010%

Second Analysis Date _____ Units _____

Z	R	T
R	Z	T
Z	T	R

Mean Test Assay _____

Component _____
Date _____ Units _____

Z	R	T
R	Z	T
Z	T	R

Mean Test Assay _____

Date _____ Units _____

Z	R	T
R	Z	T
Z	T	R

Mean Test Assay _____

Component _____
Date _____ Units _____

Z	R	T
R	Z	T
Z	T	R

Mean Test Assay _____

Date _____ Units _____

Z	R	T
R	Z	T
Z	T	R

Mean Test Assay _____

Chronology: Date _____
Assay _____

Analyst MAYNARD JOHNSON

Approved By: [signature]

TELEX: 510-100-8831 (ScotGas)
FAX: 714-887-0549
PHONE: 714-887-2571

Scott Specialty Gases a division of

Scott Environmental Technology Inc. 2600 CAJON BLVD., SAN BERNARDINO, CA 92405

Shipped From: Scott SAN BERNARDINO, CA
Date Shipped: November 18, 1988
Our Project No: 414608
Your P.O. No: 19160-MED
Page 1 of 1
Expiration Date: 5/18/90

TENNESSE GAS PIPELINE
ATTN: MIKE PETERSON

CERTIFICATE OF ANALYSIS—EPA PROTOCOL GASES*

Certified Per Traceability Protocol No. 1 Procedure No. G1 Cylinder No. AAL-13585 Cylinder Pressure 1900 psig Certified Accuracy ±1 % NBS Traceable

COMPONENTS	CERTIFIED CONC	REFERENCE STD SRM/CRM NO.	CYL. NO.	CONC.	GAS ANALYZER MAKE/MODEL/SERIAL NO.	LAST CAL. DATE	ANALYTICAL PRINCIPLE
NITRIC OXIDE	221.2 ppm	CRM 1685 B	AAL-8977	236 ppm	THERMO-ELECTRON/	11/1/88	CHEMI-LUMINENSCENT
NOX	222.1 ppm				10 AR/ 14853-150		

BALANCE GAS NITROGEN

ANALYZER READINGS: Z = Zero Gas T = Test Gas R = Reference Gas

Component NITRIC OXIDE
First Analysis Date 11/10/88 Units PPM

Z 0.00	R 95.10	T 89.18
R 94.93	Z 0.04	T 89.30
Z 0.05	T 89.33	R 94.90

Mean Test Assay 221.8 ppm

Second Analysis Date 11/17/88 Units PPM

Z 0.00	R 94.25	T 88.15
R 94.04	Z 0.05	T 88.17
Z 0.03	T 88.23	R 94.00

Mean Test Assay 221.2 ppm

Component _____ Date _____ Units _____

Z	R	T
R	Z	T
Z	T	R

Mean Test Assay _____

Date _____ Units _____

Z	R	T
R	Z	T
Z	T	R

Mean Test Assay _____

Component _____ Date _____ Units _____

Z	R	T
R	Z	T
Z	T	R

Mean Test Assay _____

Date _____ Units _____

Z	R	T
R	Z	T
Z	T	R

Mean Test Assay _____

Chronology: Date _____
Assay _____

Analyst DOUG HAGBERG

Approved By: [signature]

TELEX: 510-100-8831 (ScotGas)
FAX: 714-887-0549
PHONE: 714-887-2571

Scott Specialty Gases a division of

Scott Environmental Technology Inc. 2600 CAJON BLVD., SAN BERNARDINO, CA 92405

Shipped From: Scott SAN BERNARDINO, CA
Date Shipped November 18, 1988
Our Project No: 414608
Your P.O. No: 19160-MED
Page 1 of 1
Expiration Date: 5/18/90

TENNESSE GAS PIPELINE
ATTN: MIKE PETERSON

CERTIFICATE OF ANALYSIS—EPA PROTOCOL GASES*

Certified Per Traceability Protocol No. 1 Procedure No. G1 Cylinder No. AAL-13610 Cylinder Pressure 1900 psig Certified Accuracy ±1 % NBS Traceable

REFERENCE STD					GAS ANALYZER		
COMPONENTS	CERTIFIED CONC	SRM/CRM NO.	CYL. NO.	CONC.	MAKE/MODEL/SERIAL NO.	LAST CAL. DATE	ANALYTICAL PRINCIPLE
NITRIC OXIDE	130.2 ppm	CRM 1685 B	AAL-8977	236 ppm	THERMO-ELECTRON/	11/1/88	CHEMI-LUMINENSCENT
NOX	130.5 ppm				10 AR/ 14853-150		

BALANCE GAS NITROGEN

ANALYZER READINGS: Z = Zero Gas T = Test Gas R = Reference Gas

Component NITRIC OXIDE
First Analysis Date 11/10/88 Units PPM

Z 0.00	R 95.23	T 52.47
R 95.21	Z 0.03	T 52.53
Z 0.00	T 52.56	R 95.15

Mean Test Assay 130.2 ppm

Second Analysis Date 11/17/88 Units PPM

Z 0.00	R 94.50	T 52.08
R 94.30	Z 0.06	T 52.10
Z 0.03	T 52.08	R 94.32

Mean Test Assay 130.2 ppm

Component _____ Date _____ Units _____

Z	R	T
R	Z	T
Z	T	R

Mean Test Assay _____

Date _____ Units _____

Z	R	T
R	Z	T
Z	T	R

Mean Test Assay _____

Component _____ Date _____ Units _____

Z	R	T
R	Z	T
Z	T	R

Mean Test Assay _____

Date _____ Units _____

Z	R	T
R	Z	T
Z	T	R

Mean Test Assay _____

Chronology: Date _____
Assay _____

Analyst DOUG HAGBERG

Approved By: [signature]

TELEX: 510-100-8831 (ScotGas)
FAX: 714-887-0549
PHONE: 714-887-2571

Scott Specialty Gases a division of

Scott Environmental Technology Inc. 2600 CAJON BLVD., SAN BERNARDINO, CA 92405

Shipped From: Scott SAN BERNARDINO, CA
Date Shipped November 18, 1988
Our Project No: 414608
Your P.O. No: 19160-MED
Page 1 of 1
Expiration Date: 5/18/90

TENNESSE GAS PIPELINE
ATTN: MIKE PETERSON

CERTIFICATE OF ANALYSIS—EPA PROTOCOL GASES*

Certified Per Traceability Protocol No. 1 Procedure No. G1 Cylinder No. AAL-5037 Cylinder Pressure 1900 psig Certified Accuracy ±1 % NBS Traceable

COMPONENTS	CERTIFIED CONC	REFERENCE STD SRM/CRM NO.	CYL. NO.	CONC.	GAS ANALYZER MAKE/MODEL/SERIAL NO.	LAST CAL. DATE	ANALYTICAL PRINCIPLE
NITRIC OXIDE	61.23 ppm	SRM 1684 B	AAL-6032	94.54 ppm	THERMO-ELECTRON/	11/1/88	CHEMI-LUMINENSCENT
NOX	61.36 ppm				10 AR/ 14853-150		

BALANCE GAS NITROGEN

ANALYZER READINGS: Z = Zero Gas T = Test Gas R = Reference Gas

Component NITRIC OXIDE
First Analysis Date 11/8/88 Units PPM
Z 0.07 R 94.50 T 61.45
R 94.63 Z 0.04 T 61.55
Z 0.04 T 61.62 R 94.75
Mean Test Assay 61.47 ppm

Second Analysis Date 11/15/88 Units PPM
Z 0.00 R 94.68 T 61.40
R 94.75 Z 0.17 T 61.43
Z 0.14 T 61.50 R 95.00
Mean Test Assay 61.23 ppm

Component ____ Date ____ Units ____
Z ____ R ____ T ____
R ____ Z ____ T ____
Z ____ T ____ R ____
Mean Test Assay ____

Date ____ Units ____
Z ____ R ____ T ____
R ____ Z ____ T ____
Z ____ T ____ R ____
Mean Test Assay ____

Component ____ Date ____ Units ____
Z ____ R ____ T ____
R ____ Z ____ T ____
Z ____ T ____ R ____
Mean Test Assay ____

Date ____ Units ____
Z ____ R ____ T ____
R ____ Z ____ T ____
Z ____ T ____ R ____
Mean Test Assay ____

Chronology: Date ____
Assay ____

Analyst DOUG HAGBERG

Approved By: [signature]

cott Specialty Gases, a division of

SCOTT ENVIR[illegible]ENTAL TECHNOLOGY, INC.

PLUMSTE[illegible]LLE, PENNSYLVANIA 18949

PAGE	PROJECT NO.
1	715171

17683-4

TAXABLE	XXX	FREIGHT	COLLECT		SALES ORDER DATE 11/22/88	CUSTOMER ORDER DATE 11/22/88	DATE REQUIRED O/B 11/29/88
TAX EXEMPT			PREPAID	XXX	CUSTOMER PHONE NUMBER 662-5325		

SOLD TO

TENNESSEE GAS PIPELINE
5510 S RICE
HOUSTON, TX 77081

ADDRESS INQUIRIES TO

NH/PB

ROUTE 611
PLUMSTEADVILLE, PA. 18949
(215) 766-8861

2600 CAJON BLVD.
SAN BERNARDINO, CALIF. 92411
(714) 887-2571

1200 COMBERMERE
TROY, MICH. 48084
(313) 689-2990

3714 LAPAS DR.
HOUSTON, TX 77023
(713) 644-4620

SHIPPED TO

SAME

TERMS	CUSTOMER CODE	CUSTOMER P.O. / RELEASE NUMBER	CUSTOMER AUTHORITY	DATE SHIPPED	F.O.B. POINT	SHIP VIA
NET 30 DAYS	78120100 78120100	19160-MEP	MIKE PETERSON		SHIPPING POINT	CANNONBALL

ITEM NO.	PRODUCT CODE	QTY. ORDERED	CYL. SIZE	DESCRIPTION	QTY. SHIPPED	QTY. B/O	UNIT PRICE	EXTENSION
1	258116AL	2	AL	FED FUEL 40% HYDROGEN 60% HELIUM (N1) RENTAL ALM-3292 ALM-3286	2		[redacted]	[redacted]
2	1022AL	4	AL	AIR, HCF GRADE ~~THE~~ THC < 0.1 PPM (N1) RENTAL ALM-3315 ALM-3374 ALM-3359 ALM-3339	4		[redacted]	[redacted]
3	1813AL	1	AL	NITROGEN, ZERO GRADE (N1) RENTAL AAL-17031	~~2~~ 1		[redacted]	[redacted]
				RENTAL: 30 DAYS FREE, $0.18 PER CYLINDER, PER DAY THEREAFTER				

TOTAL	[redacted]
FREIGHT	[redacted]
% TAX	[redacted]
PAY THIS AMOUNT	[redacted]

W. Hayywood

ORDER APPROVED BY

YOUR PURCHASE ORDER IS ACCEPTED IN ACCORDANCE WITH THE TERMS AND CONDITIONS AS STATED ON THE REVERSE SIDE OF THIS FORM.

NAME PICK UP EMPTIES
SHIP PARTIAL ASAP

COMPANY

ADDRESS

ANALYTICAL REPORT TO BE SENT TO ABOVE

BECKMAN

BECKMAN INSTRUMENTS, INC.
PROCESS INSTRUMENTS DIVISION
9630 Clarewood, Suite D-1, Houston, Texas 77036 • Telephone: (713) 988-0030 • TWX: 910-881-7275

July 21, 1983

Tennessee Gas Pipeline
5510 South Rice Avenue
Houston, Texas 77081

Attention: Mr. John Wilson

Gentlemen:

Per your request, regarding the interference to the oxygen reading for varing stream composition, we have calculated the interference for high and low extremes as follows:

Composition 1		Composition 2
CO	450 ppm	550 ppm
SO_2	180 ppm	220 ppm
CO_2	9 per cent	11 per cent
N_2	90.937 percent	88.923 per cent

MS Composition 1				MS Composition 2		
CO	- .354 x .450	.0002		x	.055	.0002
SO_2	- .540 x .018	.0001		x	.022	.0001
CO_2	- .623 x 9.00	.0561		x	11.0	.0685
N_2	- .358 x 90.937	.3256		x	88.923	.3183
		-.382				-.387

MS=Magnetic susseptability

Maximum error composition 1to composition 2 -.005% O_2 due to change in stream composition.

Zeroing with N_2 at zero will give an error of 0.024 (composition 1) and 0.029 (composition 2). These errors are insignificant and below analyzer specified accurage. Streams which have the zero gas as 85 percent or greater of the total are not significantly effected by changes in composition.

If this information is not sufficient to meet your need please contact myself or Mr. Jim Lindeneau at (713)988-0030

Yours very truly,

BECKMAN INSTRUMENTS, INC.

J. Walter Holland

J. Walter Holland
Sales Representative

JWH/sh

CC: Jim Lindeneau

INTERFERENCE RESPONSE TEST

DATE OF TEST: JANUARY 18, 1980

ANALYZER TYPE: 10AR (Range 0-2.5 ppm)

SERIAL NO: 10AR-0 14B-80

TEST GAS TYPE	CONCENTRATION PPM	ANALYZER OUTPUT RESPONSE	% OF SPAN
CO	500	<.1 ppm	<.1%
SO_2	201	<.1 ppm	<.1%
CO_2	10%	<.1 ppm	<.1%
O_2	20.9%	<.1 ppm	<.1%

Personnel 9/7
Nancy