Note: This is a reference cited in *AP 42, Compilation of Air Pollutant Emission Factors, Volume I Stationary Point and Area Sources.* AP42 is located on the EPA web site at www.epa.gov/ttn/chief/ap42/

The file name refers to the reference number, the AP42 chapter and section. The file name "ref02_c01s02.pdf" would mean the reference is from AP42 chapter 1 section 2. The reference may be from a previous version of the section and no longer cited. The primary source should always be checked.

AP-42 Section Number: 3.1

Reference Number: 12

Title: Sourcebook: NOx Control Technology Data

Campbell, L. M. and G. S. Shareef,
EPA 600/2-91-029

US EPA

July 1991

EPA-600/2-91-029
July 1991

SOURCEBOOK:

NO_X CONTROL TECHNOLOGY DATA

by:

Lisa M. Campbell
Diana K. Stone
and
Gunseli S. Shareef
Radian Corporation
Progress Center
3200 E. Chapel Hill Rd./Nelson Hwy.
Research Triangle Park, North Carolina 27709

EPA Contract No. 68-02-4286
Work Assignment Nos. 92, 102, and 117

EPA Project Officer

Charles B. Sedman

Air and Energy Engineering Research Laboratory
U.S. Environmental Protection Agency
Research Triangle Park, North Carolina 27711

Printed on Recycled Paper

RESEARCH REPORTING SERIES

Research reports of the Office of Research and Development, U.S. Environmental Protection Agency, have been grouped into nine series. These nine broad categories were established to facilitate further development and application of environmental technology. Elimination of traditional grouping was consciously planned to foster technology transfer and a maximum interface in related fields. The nine series are:

1. Environmental Health Effects Research
2. Environmental Protection Technology
3. Ecological Research
4. Environmental Monitoring
5. Socioeconomic Environmental Studies
6. Scientific and Technical Assessment Reports (STAR)
7. Interagency Energy-Environment Research and Development
8. "Special" Reports
9. Miscellaneous Reports

This report has been assigned to the ENVIRONMENTAL PROTECTION TECHNOLOGY series. This series describes research performed to develop and demonstrate instrumentation, equipment, and methodology to repair or prevent environmental degradation from point and non-point sources of pollution. This work provides the new or improved technology required for the control and treatment of pollution sources to meet environmental quality standards.

EPA REVIEW NOTICE

This report has been reviewed by the U.S. Environmental Protection Agency, and approved for publication. Approval does not signify that the contents necessarily reflect the views and policy of the Agency, nor does mention of trade names or commercial products constitute endorsement or recommendation for use.

This document is available to the public through the National Technical Information Service, Springfield, Virginia 22161.

SOURCEBOOK:

NO_X CONTROL TECHNOLOGY DATA

CONTROL TECHNOLOGY CENTER
Sponsored By:

Emission Standards Division
Office of Air Quality Planning and Standards
U. S. Environmental Protection Agency
Research Triangle Park, NC 27711

Air and Energy Engineering Research Laboratory
Office of Research and Development
U. S. Environmental Protection Agency
Research Triangle Park, NC 27711

Center for Environmental Research Information
Office of Research and Development
U. S. Environmental Protection Agency
Cincinnati, OH 45268

CONTENTS

Figures v
Tables vi

1. Introduction 1
   1.1 Objectives and Approach 1
   1.2 Report Organization 3

2. NO_x Formation 5
   2.1 Thermal NO_x 5
   2.2 Fuel NO_x 8
   2.3 Prompt NO_x 10

3. Combustion Sources 11
   3.1 Combustion Turbines 11
      3.1.1 Source Description 11
      3.1.2 NO_x Emissions 13
   3.2 Stationary Internal Combustion Engines 14
      3.2.1 Source Description 14
      3.2.2 NO_x Emissions 14
   3.3 Non-Utility Boilers and Heaters 17
      3.3.1 Source Description 17
      3.3.2 NO_x Emissions 18
   3.4 Municipal Waste and Sludge Incinerators 19
      3.4.1 Source Description 19
      3.4.2 NO_x Emissions 20

4. Combustion Controls for NO_x Emissions 21
   4.1 Combustion Turbine Controls 21
      4.1.1 Dry Control 21
      4.1.2 Wet Injection 22
   4.2 Stationary Internal Combustion Engine Controls 23
      4.2.1 Injection Timing Retard 23
      4.2.2 Pre-Ignition Chamber Combustion "Clean Burn" Technology 23
      4.2.3 Air to Fuel Ratio 23
      4.2.4 Wet Injection 24
   4.3 Combustion Controls for Other Sources 24
      4.3.1 Low Excess Air (LEA) 24
      4.3.2 Low NO_x Burners (LNB) 25
      4.3.3 Overfire Air (OFA) 27
      4.3.4 Burners Out of Service 29
      4.3.5 Reburn 30
      4.3.6 Flue Gas Recirculation (FGR) or Exhaust Gas Recirculation (EGR) 30
      4.3.7 Reduced Combustion Air Temperature 32
      4.3.8 Derating/Load Reduction 32

CONTENTS (Continued)

5. Post-Combustion NO_x Control Technologies 33
   5.1 Selective Catalytic Reduction 33
   5.2 Non-selective Catalytic Reduction 37
   5.3 Selective Non-catalytic Reduction (SNCR) 37
      5.3.1 Thermal $DeNO_x$® 38
      5.3.2 NOxOut® 40

6. Status of NO_x Control Technology Applications 41
   6.1 Combustion Turbines 41
      6.1.1 Combustion Controls 43
      6.1.2 Selective Catalytic Reduction 43
   6.2 Stationary Internal Combustion Engines 43
      6.2.1 Combustion Controls 44
      6.2.2 Selective Catalytic Reduction 45
      6.2.3 Non-selective Catalytic Reduction 45
   6.3 Non-Utility Boilers and Heaters 45
      6.3.1 Combustion Controls 45
      6.3.2 Selective Catalytic Reduction 47
      6.3.3 Selective Non-catalytic Reduction 48
   6.4 Municipal Waste and Sludge Incineration 48
      6.4.1 Selective Non-catalytic Reduction 48
      6.4.2 Selective Catalytic Reduction (Japan) 48

7. NO_x Control Data 50
   7.1 Combustion Turbines 50
      7.1.1 Combustion Controls/Wet Injection 50
      7.1.2 Combustion Controls/Dry Low NO_x 51
      7.1.3 Selective Catalytic Reduction 51
   7.2 Stationary Internal Combustion Engines 52
      7.2.1 Combustion Controls 52
      7.2.2 Non-selective Catalytic Reduction 53
      7.2.3 Selective Catalytic Reduction 53
   7.3 Non-Utility Boilers and Heaters 54
      7.3.1 Combustion Controls 54
      7.3.2 Selective Non-catalytic Reduction 54
      7.3.3 Selective Catalytic Reduction 56
   7.4 Municipal Waste and Sludge Incineration 56
      7.4.1 Combustion Controls 56
      7.4.2 Selective Non-catalytic Reduction 57
      7.4.3 Selective Catalytic Reduction (Japan) 57

8. References 58

Appendices

A. NO_x Control Data - Combustion Turbines A-1
B. NO_x Control Data - Stationary Internal Combustion Engines B-1
C. NO_x Control Data - Non-Utility Boilers and Heaters C-1
D. NO_x Control Data - Municipal Waste and Sludge Incinerators D-1
E. NO_x Control Data - West Germany E-1
F. NO_x Control Data - Japan F-1
G. Partial Vendor Listing G-1
H. Conversion Factors H-1

FIGURES

Number		Page
1	Temperature Dependence of the Three Sources of NO_x for a Coal-Fired Furnace	6
2	Effect of Air-to-Fuel Ratio on Thermal NO_x Emissions	7
3	Thermal NO_x Formation Dependence on Flame Temperature	9
4	Gas Turbine with Can-Annular Combustor	12
5	Cylinder Events for a Two Stroke Cycle Diesel Engine	15
6	Staged Air Burner	26
7	Staged Fuel Burner	28
8	NO_x Reburning with Gas	31
9	SCR System Process Flow Diagram for Gas Turbine/HRSG System (HRSG: heat recovery steam generator)	34
10	Effect of Temperature and Oxygen on NO_x Conversion	35
11	Schematic Diagram for Selective Non-Catalytic Reduction	39

TABLES

Number		Page
1	NO_x Control Technology Applicability	42
2	NO_x Control Technology Applicability - Combustion Turbines	42
3	NO_x Control Technology Applicability - Stationary IC Engines	44
4	West Germany Site Visits (IC Engines)	46
5	NO_x Control Technology Applicability - Non-Utility Boilers and Heaters	47
6	NO_x Control Technology Applicability - Waste Incinerators	49
7	NO_x Control Levels - Combustion Turbines	51
8	NO_x Control Levels - Stationary Internal Combustion Engines	53
9	NO_x Control Levels - Non-Utility Boilers and Heaters	55
10	NO_x Control Levels - Waste Incineration	57
A-1	Combustion Turbines (Gas-fired and Dual Fuel-fired)	A-3
B-1	Stationary IC Engines (Gas-fired)	B-3
B-2	Stationary IC Engines (Excluding Gas-fired Units)	B-9
C-1	Coal-fired Boilers	C-3
C-2	Gas-fired Boilers	C-9
C-3	Oil-fired Boilers	C-11
C-4	Wood/Waste Boilers	C-13
C-5	Refinery Heaters	C-14
D-1	Waste Incinerators	D-3
F-1	SCR Sites for Combustion Turbines	F-2
F-2	SCR Sites for Stationary IC Engines	F-2
F-3	Industrial Boilers Fitted with SCR for Dirty Fuels	F-3
F-4	Waste Sludge Incinerators Fitted with SCR	F-4

SECTION 1

INTRODUCTION

Emissions of nitrogen oxides (NO_x) are an environmental issue which has been attracting increasing regulatory attention at the local, State, and Federal level. Concerns over ozone abatement and control, acid rain, the growth in stationary source combustion systems, and implementation of prevention of significant deterioration (PSD) increments for NO_x have all contributed to the increased attention. A number of states, in addition to California, are now focusing on NO_x emission sources. In addition several Federal New Source Performance Standards (NSPS) have been issued which regulate NO_x including utility and industrial boilers, nitric acid plants, gas turbines, and municipal waste combustors.

A wide variety of new and emerging NO_x control technologies are being marketed in the United States, as well as in Europe and Japan. The performance reported by vendors for many of these systems have not been well documented in the literature. Very little data are available to demonstrate the actual applicability and long-term operating performance of the current generation of NO_x control technologies.

There is interest among the State and local regulatory agencies as to the level of NO_x control that can be achieved with current technology. State and local officials are not always familiar with some of the newer technologies currently being marketed and often have difficulty in reviewing permit applications for major NO_x emission sources. In some states, the permitting process has been slowed by the uncertainty over the availability and performance of NO_x control technology. This has resulted in a large number of requests to the U.S. Environmental Protection Agency (EPA) for assistance in the NO_x control area. As part of an effort to respond to these requests, EPA's Control Technology Center (CTC) has initiated the current study to develop a reference book of information on NO_x controls. This report presents the results of this study.

1.1 OBJECTIVES AND APPROACH

The primary objective of this study was to compile a reference book to serve as a source of information on the availability and applicability of technologies for controlling NO_x emissions from stationary industrial combustion sources. An additional objective was to provide EPA a reference tool for responding to requests for guidance and assistance in developing future regulatory strategies.

There are many stationary industrial combustion source types that are significant NO_x emitters. However, this study and report focus on only those most frequently included in new source permit applications and cover the following combustion source types:

- combustion turbines
- internal combustion (IC) engines
- *non-utility boilers and heaters*
- municipal waste and sludge incinerators

All non-utility combustion sources (less than 1,000 x 10^6 Btu/hour heat input) were included except hospital waste incinerators, hazardous waste incinerators, and glass furnaces.

At the onset of this study, requests for permit applications, final permit conditions, and both initial compliance and subsequent annual compliance test data were made to a number of EPA Regional and State/local regulatory agencies, by telephone and/or letter. The agencies contacted during this study include the following:

State Agencies:

California

Bay Area Air Quality Management District

California Air Resources Board

Fresno County Air Pollution Control District

Kern County Air Pollution Control District

Monterey Bay Unified Air Pollution Control District

Resource Management Agency Air Pollution Control District

Sacramento Air Pollution Control District

San Diego Air Pollution Control District

Santa Barbara Air Pollution Control District

South Coast Air Quality Management District

Stanislaus County Air Pollution Control District

Colorado Air Pollution Division

Commonwealth of Massachusetts Department of Environmental Protection

Connecticut Pollution Control Agency

Michigan Pollution Control Agency

Minnesota Pollution Control Agency

New York State Department of Environmental Conservation

Ohio Air Pollution Control Agency

Rhode Island Division of Air and Hazardous Materials

Texas Air Control Board

Utah Bureau of Air Quality

Virginia Department of Air Pollution Control

EPA Regional Offices

Region 1

Region 2

Region 3

Region 4

Region 5

Region 6

Region 7

Region 8

Region 9

Northeast States for Coordinated Air Use Management (NESCAUM)

Only minimal data were received as a result of this effort. As it was beyond the scope of the project to survey all the regulatory agencies and collect the available information on-site, the data presented in this report are of limited nature and are based on the following information sources:

a) BACT/LAER Clearinghouse on-line data base,

b) EPA Region 9,

c) California Air Resources Board,

d) West Germany site visits,

e) Environmental Catalyst Consultants, Inc.

Two other areas of interest in NO_x control--cost data and detailed emission test data--are not included in this report. Costs are deserving of a separate report and their site-specific nature requires considerably more detailed analyses than possible in the following discussions. Emission test data require intense scrutiny to determine validity and relevance to the specific application. This effort is also outside the scope of this study.

Both cost and performance data are available from the sources cited in the Appendices and may be addressed by future CTC efforts.

The information contained in the BACT/LAER Clearinghouse is provided by the state control agencies on a voluntary basis and includes projects that have obtained permit approval, although some projects may be cancelled later. However, for the purposes of the sourcebook, the Clearinghouse information does reflect BACT/LAER applicability decisions by the regulatory community.

1.2 REPORT ORGANIZATION

The sourcebook is divided into eight sections. Section 2 contains a description of NO_x formation mechanisms during combustion, followed by Section 3 which is a discussion of the major combustion source types [combustion turbines, stationary internal combustion (IC) engines, industrial boilers and heaters, and municipal waste incinerators]. Process descriptions of NO_x control technologies are presented in Sections 4 and 5. Section 6 presents the current status of NO_x control technology applications. This section briefly describes and presents in matrix form the control technologies

applicable to each combustion source (and fuel). In Section 7, permitted NO_x emissions levels are summarized by combustion source, fuel type, and control technology. References used in developing the sourcebook are listed in Section 8. Detailed data supporting the discussion in Sections 5, 6, and 7 and contact names for further information are given in Appendices A - H.

SECTION 2

NO_x FORMATION

The principles of NO_x control are best understood when the principles of NO_x formation are known. The term NO_x represents the combination of nitric oxide (NO) and nitrogen dioxide (NO_2); however, the flue gas resulting from fossil fuel combustion consists primarily of NO, with NO representing 90 to 95 percent of the total NO_x due to kinetic limitations in the oxidation of NO to NO_2.[1]

NO_x formation occurs by three fundamentally different mechanisms.[1] One mechanism (thermal NO_x) arises from the thermal dissociation and subsequent reaction of nitrogen (N_2) and oxygen (O_2) molecules in the combustion air. The second mechanism (fuel NO_x) stems from the evolution and reaction of fuel-bound nitrogen compounds with oxygen. A third mechanism (prompt NO_x) involves the intermediate formation of hydrogen cyanide (HCN), followed by oxidation of HCN to NO. Natural gas and most distillate oils have no chemically bound fuel nitrogen and essentially all NO_x formed is thermal NO_x. Residual oils and coals all have fuel bound nitrogen and when these are combusted, NO_x is formed by all mechanisms. The formation of prompt NO_x is only significant in very fuel-rich flames.

The temperature dependence of each NO_x type (i.e. thermal, fuel, and prompt NO_x) for a coal-fired furnace is given in Figure 1.[1] These mechanisms are described in more detail below.

2.1 THERMAL NO_x

At high temperatures, both N_2 and O_2 molecules in the combustion air are dissociated into their respective atomic states, N and O. The subsequent reaction of these atoms to create thermal NO_x is described by the well-known Zeldovich equations:[2]

$$N_2 + O \rightarrow NO + N \tag{1}$$

$$N + O_2 \rightarrow NO + O \tag{2}$$

The rates of these reactions are highly dependent upon the stoichiometric ratio in the primary combustion zone (i.e., the molecular equivalent air-to-fuel ratio, with "rich and lean" describing the fuel amount), flame temperature, and residence time at the flame temperature.

The maximum thermal NO_x production occurs at a slightly lean fuel mixture ratio due to the excess availability of oxygen for reaction within the hot flame zone. As shown in Figure 2, the very

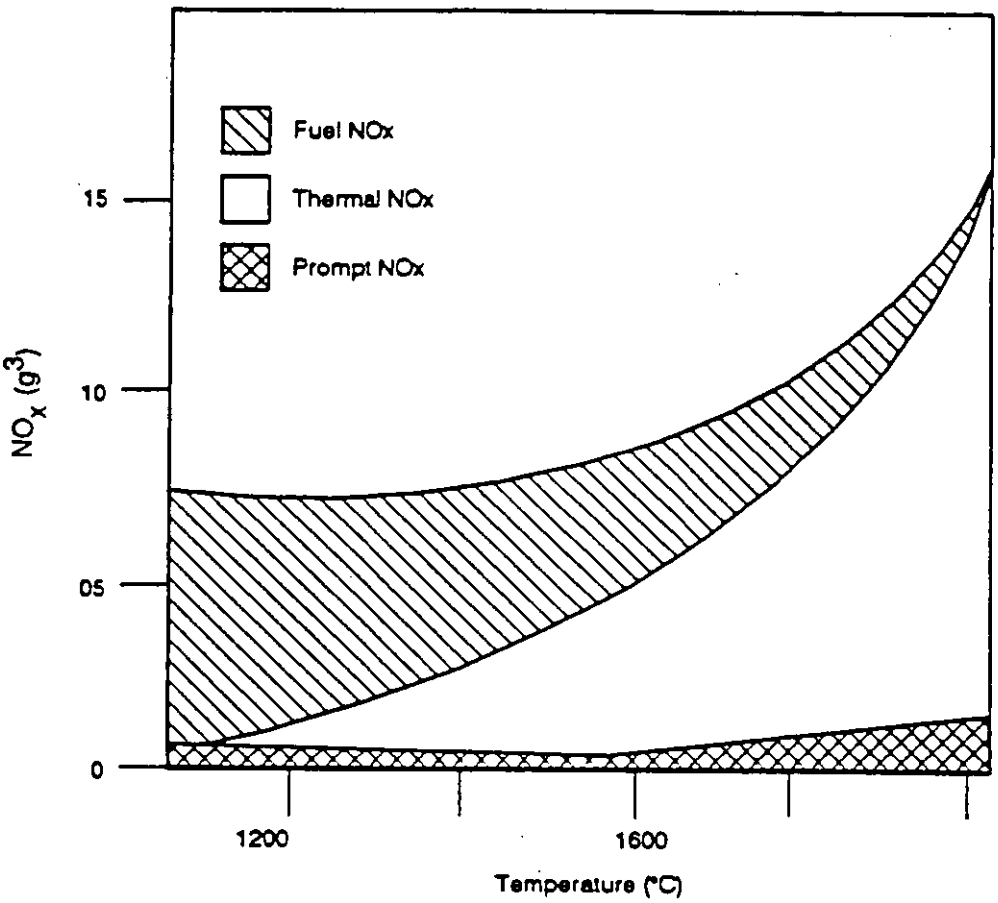

Figure 1. Temperature Dependence of the Three Sources of NO_x for a Coal-Fired Furnace

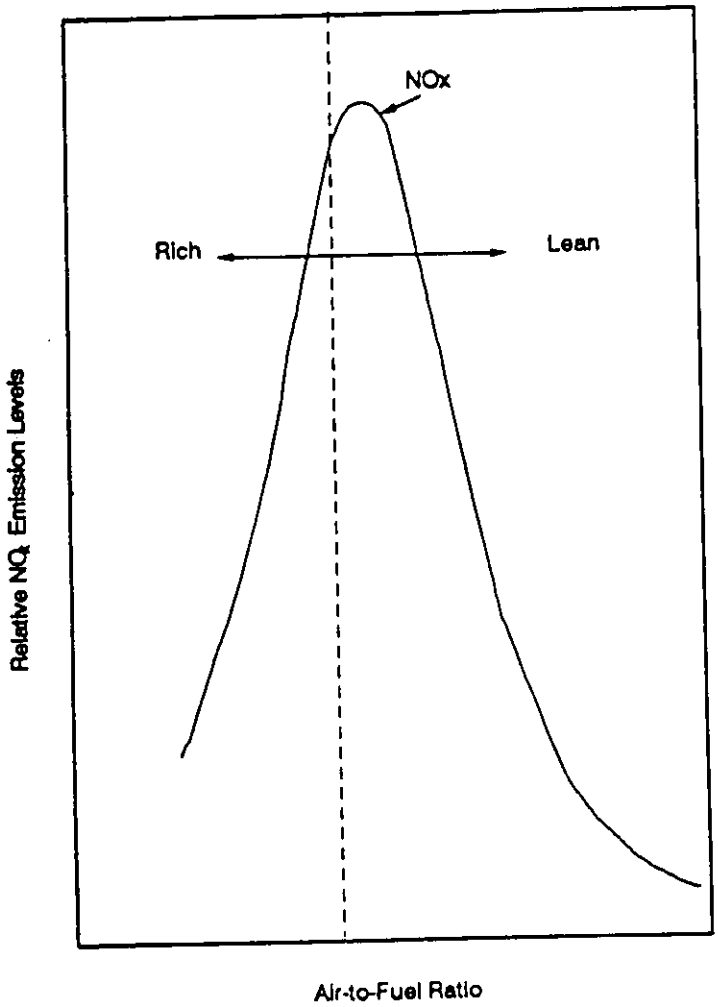

Figure 2. Effect of Air-to-Fuel Ratio on Thermal NO_x Emissions [3]

2.3 PROMPT NO_x

Prompt NO_x is produced by the formation first of intermediate HCN via the reaction of nitrogen radicals and hydrocarbons (HC),

$$NO + HC + H_2 \rightarrow HCN + H_2O \tag{3}$$

followed by the oxidation of the HCN to NO. The formation of prompt NO_x has a weak temperature dependence and a short lifetime of several microseconds; it is only significant in very fuel-rich flames, which are inherently low-NO_x emitters.

SECTION 3

COMBUSTION SOURCES

When considering NO_x control, it is critical to understand that the combustion source and its operation can affect NO_x formation and the performance of control technologies. The description of the major combustion source types included in this study (i.e., combustion turbines, stationary IC engines, boilers and heaters, and waste incinerators) as well as the relationship between NO_x formation and characteristics of the combustion source type are discussed below.

3.1 COMBUSTION TURBINES

3.1.1 Source Description

Gas turbines are rotary internal combustion engines fueled by natural gas, diesel or distillate fuel oils (occasionally residual or crude oils). The basic gas turbine consists of a compressor, combustion chambers, and a turbine. The compressor delivers pressurized combustion air to the combustors at compression ratios of up to 20 to 1. Injectors introduce fuel into the combustors and the mixture is burned with exit temperatures up to 2,000°F. The hot combustion gases are rapidly quenched by secondary dilution air and then expanded through the turbine which drives the compressor and provides shaft power. In some applications, exhaust gases are also expanded through a power turbine.

While simple-cycle gas turbines have only the three components described above, regenerative-cycle gas turbines also use hot exhaust gases (800 to 1,100°F) to preheat the inlet air between the compressor and the combustor. This makes it possible to recover some of the thermal energy in the exhaust gases and to increase thermal efficiency. A third type of turbine is the combined-cycle gas turbine. The combined-cycle turbine is basically a simple-cycle unit which exhausts to a waste heat boiler to recover thermal energy from the exhaust gases. In some cases, the waste heat boiler also has duct burners designed to burn additional fuel to supplement steam production, a process which is referred to as supplementary firing.

The design of the combustor is a major factor in determining achievable NO_x levels. The three combustor configurations used are annular, can-annular, and silo. The annular combustor has one doughnut-shaped combustor, to which a number of short nozzles are attached, encircling the gas turbine body. Combustion air is combined with fuel in each of these nozzles. Fuel and air then enter the single annulus located around the turbine circumference. Combustion and dilution take place in the single annulus. The can-annular combustor (see Figure 4) has several combustor cans arranged in an

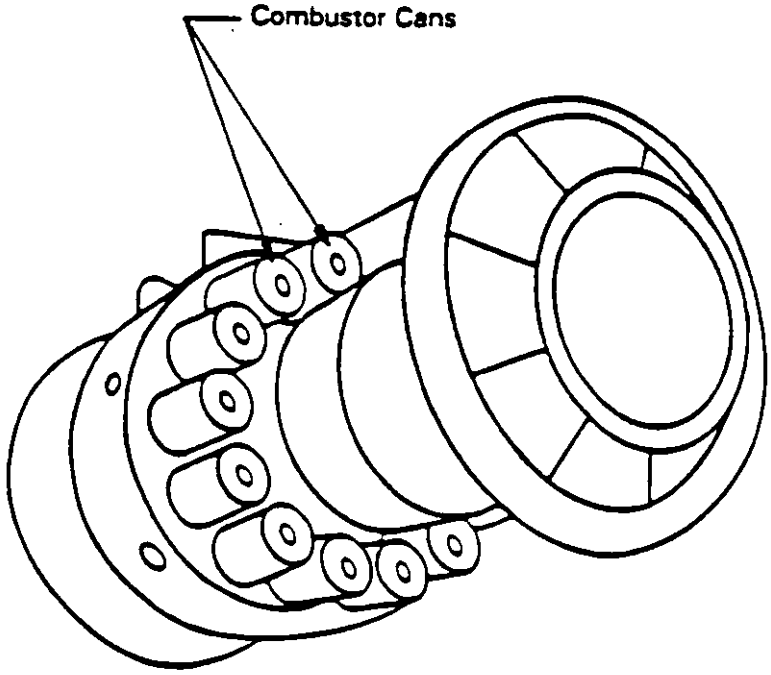

Figure 4. Gas Turbine With Can-Annular Combustor

annular configuration around the turbine centerline. The silo combustor configuration has one or two large combustors located outside the body of the gas turbine. Combustors may be arranged either horizontally or vertically.

All combustors have four basic zones: the inlet diffuser zone, the primary combustion zone the secondary combustion and dilution zone, and the outlet transition zone. The inlet diffuser zone reduces the incoming gas velocity. If the velocity of the combustion air is not sufficiently reduced, residence time within the combustor will be too short for complete combustion and flame instability can occur.

Ignition occurs in the primary combustion zone. The fuel is injected into the combustion zone through a nozzle. The air first enters the area between the combustor liner and the shroud, or casing. The flow of air between the liner and the shroud serves the dual function of heating the air and cooling the liner. Combustion in this zone occurs at near stoichiometric fuel-air ratios.

The materials of the combustor liner and turbine cannot withstand the high combustion temperatures. Therefore, the secondary combustion zone provides not only for the complete combustion of the fuel, but also provides additional air to quickly dilute the hot gases to a temperature more compatible with combustor and turbine materials. In the outlet transition zone, the hot combustion gases are passed through a duct leading to the turbine inlet vanes.

3.1.2 NO_x Emissions[5]

NO_x is the primary pollutant produced by combustion turbines. Factors affecting NO_x formation include turbine design, ambient conditions, turbine load, and fuel type. The design parameters that affect the production of NO_x in the combustor most significantly are combustor inlet temperature and pressure and the firing temperature. As predicted by the Zeldovich equations (see Section 2.1), NO_x emissions rise rapidly with increasing firing temperatures. NO_x formation is also directly related to combustor pressure; with increased pressure resulting in increased NO_x emissions.

Turbine efficiency is largely determined by the combustor firing temperature and pressure. Therefore, turbine models with regenerators, which are used to increase efficiency by increasing the combustor inlet air temperature, have higher NO_x emissions than the same models without regeneration. Many cogeneration/combined-cycle systems also employ natural gas-fired duct burners for exhaust temperature control.

Turbine NO_x emissions change with changes in ambient temperature, pressure, and especially humidity. Increases in humidity have a quenching effect on the combustor zone peak temperature, thereby reducing thermal NO_x formation. The effect of temperature on NO_x emissions changes as humidity changes. At low humidity, NO_x levels increase with an increase in temperature. At high humidity, the effect of temperature on NO_x formation depends on the range over which the temperature changes. Increases in ambient pressure increase gas compressor outlet pressures which in turn increase NO_x emissions. For example, NO_x emissions from a turbine installed at an elevation of one

mile above sea level decrease by about 10 percent compared to a similar turbine operating at sea level.

"Base load" and "peak load" are terms used by manufacturers to describe specific turbine operating conditions. Base load is the level of power the turbine can produce at the maximum inlet temperature which can be maintained continuously without damaging the turbine. Peak load ratings are typically 5-10 percent higher than the base load. At this level of power for continuous long-term operation, damage will result to the turbine. However, for short periods of operation (generally <1,000 hours annually), this level of power can be produced without excessive maintenance costs. Since increased turbine load is achieved by increasing the combustor temperature and pressure, turbine NO_x emissions increase with increased load.

Natural gas is presently the most common turbine fuel. Many new gas turbines are installed with dual-fuel nozzles which fire natural gas as the primary fuel and distillate oil as the backup fuel. Digester gas, refinery gas, and coal-derived gas have also been used.

3.2 STATIONARY INTERNAL COMBUSTION ENGINES

3.2.1 Source Description

Stationary reciprocating IC engines use two methods to ignite the fuel-air mixture in the combustion chamber, and are either compression ignition (CI) units fueled by diesel oil or a combination of natural gas and diesel oil (dual), or spark ignition (SI) fueled by natural gas or gasoline.

In CI engines (see Figure 5), air is first compression heated in the cylinder, and the diesel fuel is injected into the hot air where ignition is spontaneous. In SI engines combustion is spark initiated with the natural gas or gasoline being introduced either by injection or premixed with the combustion air in a carburetted system. Either 2- or 4-stroke power cycle designs with various combinations of fuel charging, air charging, and chamber design are available.

3.2.2 NO_x Emissions

Due to the high flame temperatures and pressures of IC engines, the majority of NO_x formed is thermal NO_x.[6] As diesel fuel and natural gas are the predominate fuels for this source, little fuel NO_x is formed, except in engines that fire residual and/or crude oils. Formation of prompt NO_x is also negligible in compression ignited engines which operate with large amounts of excess air.

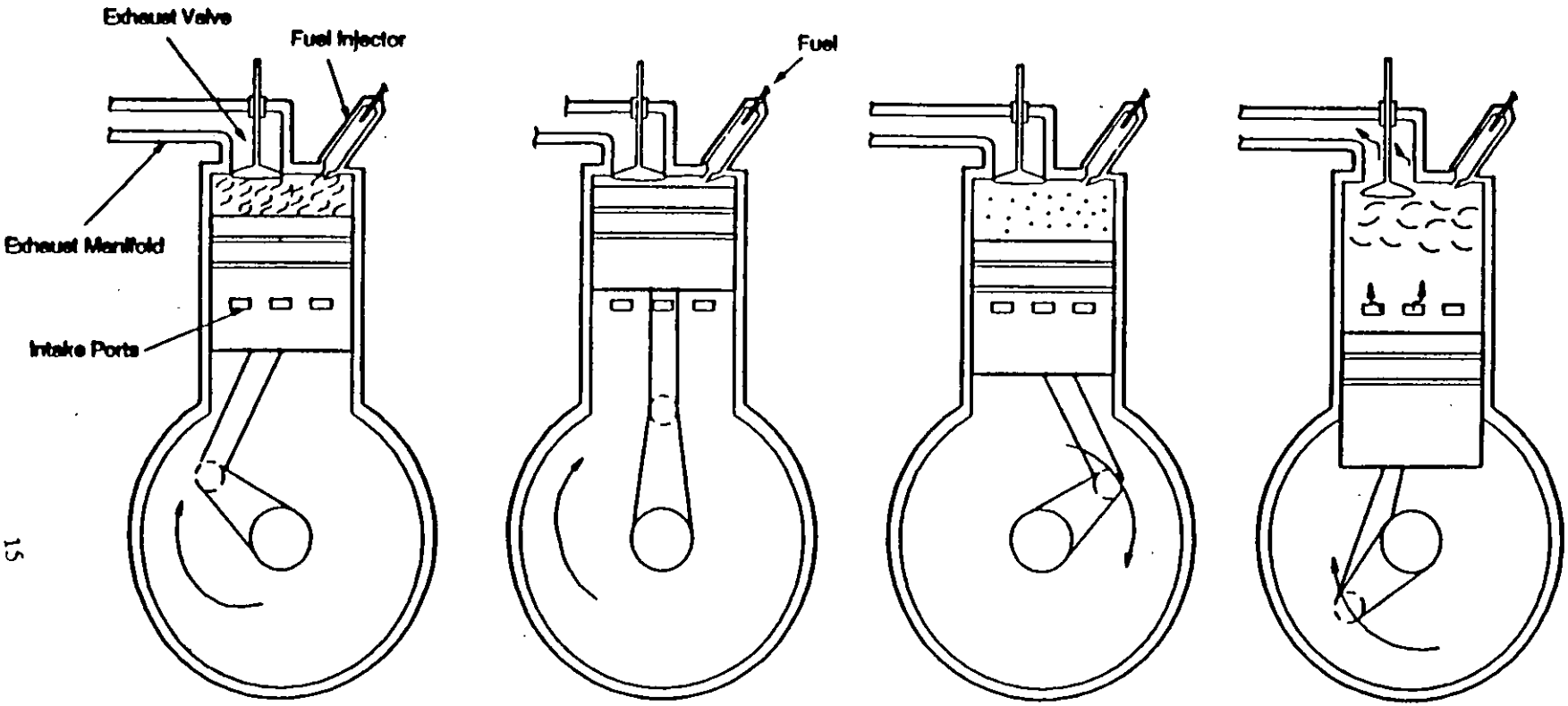

Compression

A. Intake Ports Covered

B. Exhaust Valve Closes

Combustion

A. Fuel Enters Cylinder by Injection

B. Combustion by Autoignition

Power Stroke

A. Piston Moves Down

B. Power Delivered to Crankshaft

Scavenging

A. Air Blown Into Cylinder

B. Exhaust Gases Purged

Figure 5. Cylinder Events for a Two Stroke Cycle Diesel Engine

When fuel is injected into the cylinder, it undergoes a series of reactions that lead to ignition. The time between the start of injection of the fuel and the start of combustion (as measured by the onset of energy release) is called the ignition delay. Initial combustion occurs around the periphery of the fuel jet, where the air/fuel ratio is close to the stoichiometric ratio.

During ignition delay, some of the fuel is pre-mixed with air and evaporates. After ignition occurs, the pre-mixed charge burns extremely rapidly, thereby quickly releasing energy. Most of the burning takes place as a diffusion flame after the pre-mixed charge has burned.

NO_x emissions are directly affected by the amount of pre-mixing which, in turn, is a function of the ignition delay. When the ignition delay is large, there is more pre-mixing and a greater energy release rate at the start of combustion. This generally leads to higher temperatures and, accordingly, higher NO_x emissions.

In general, engine load does not have a profound effect on the brake-specific (NO_x rate to power output ratio) NO_x emission rates for diesel-fueled engines, although the total mass emission rates increase as the engine load increases. At very low engine loads, almost all of the energy is released during the pre-mixed stage. Consequently, brake-specific emissions under these conditions are relatively high. As load increases, the amount of pre-mixed burning remains relatively constant while the amount of diffusion burning increases linearly. The amount of NO_x produced during this stage is proportional to the amount of fuel consumed because most of the diffusion burning takes place at stoichiometric conditions. Thus, as engine load increases, the concentration of NO_x in the exhaust gas increases. However, the brake-specific NO_x emission rate remains roughly the same since power output also increases by the same factor.

Brake-specific NO_x emission rates for dual-fuel compression ignition engines are sensitive to load. Emission rates are greatest at high loads. Dual-fuel engines generally burn a homogeneous charge of fuel. A compression ignition engine is unthrottled; the air-fuel ratio of the charge decreases as engine load increases. At high loads, combustion occurs closer to the point where maximum NO_x is produced.

Pre-ignition chamber engines have lower baseline NO_x emissions than direct fuel injection engines. Shorter ignition delay combined with the generally richer combustion conditions in the pre-ignition chamber results in smoother combustion and lower peak temperatures. In addition, there are significant heat transfer losses as the combustion gas goes from the pre-ignition chamber to the main combustion chamber, lowering peak temperatures.

3.3 NON-UTILITY BOILERS AND HEATERS

3.3.1 Source Description

Boilers--

Industrial boilers are typically classified by the type of firing mechanism employed, the heat transfer mechanism, and the type of fuel fired.[7] Firing mechanisms include either burners, spreader-fed, or mass-fed. With burners, the fuel is injected into the boiler through a nozzle and burns while suspended within the boiler combustion chamber. Mass-fed and spreader-fed boilers are used for most solid fuel industrial boilers. They combust the fuel on a grate in the boiler.

Watertube is the most common mechanism used for heat transfer in industrial boilers. In watertube boilers, the water for steam generation is contained in banks of tubes suspended in the boiler combustion chamber and flue. Firetube boilers invert this configuration and pass hot flue gasses through tubes suspended in a water drum.

Industrial boilers are fired with a wide variety of fossil and nonfossil fuels, including natural gas, fuel oil, and coal. Nonfossil fuels fired in industrial boilers include wood, bark, agricultural waste, municipal waste, and industrial waste.

Fired Heaters--

Many designs of fired heaters are available. All fired heaters have a radiant section and the majority have a convection section. The radiant section is located within the firebox and contains the burners and a single row of tubular coils. The primary heating of the feedstocks occurs within the radiant section. As the name implies, radiation is the primary method of heat transfer.

The tube coil in the radiant section consists of a number of tubes connected in series by 180 degree return bends. Each set of consecutive tubes is considered a "pass" or parallel stream. The convection section is located after the radiant section and also contains a set of tubes. The convection section recovers the residual heat of the flue gas before it goes to the stack. The temperature of the flue gas leaving the radiant section usually ranges from 1,500 - 1,800°F.[7]

Two basic draft types are available to supply combustion air and to remove flue gas. These are natural-draft and mechanical-draft. Natural-draft heaters rely on the natural stack effect to remove flue gas and induce the flow of combustion air into the firebox. In a mechanical-draft heater, a fan supplies the combustion air and removes flue gas. A mechanical-draft heater can use either an induced-draft, forced-draft, or induced-draft/forced-draft (balanced draft) design.

Combustion air preheaters are often used to improve the efficiency of a fired heater. In the air preheater, heat is transferred from the flue gas to the combustion air. Therefore, less heat is required to heat the combustion air which allows a greater proportion of the total heat released to be absorbed

in the radiant section. Also, less fuel is required to reach the required combustion temperature. In addition, the preheater raises the adiabatic flame temperature above that of ambient air heaters.

3.3.2 NO_x Emissions

NO_x emissions from boilers and fired heaters depend on several design and operating parameters including fuel type, burner type, combustion air preheat, firebox temperature, draft type, excess air level, and heater load.

The most important design parameter affecting NO_x emissions from a boiler/fired heater is fuel type (i.e., the nitrogen content of the fuel). Coal firing can be expected to generate higher NO_x emissions per unit of energy input than comparable oil-fired units, and likewise for gas-fired units. In addition, fluctuations in fuel composition and heating value may affect NO_x emissions.

Another design factor having a large effect on NO_x emissions is burner type. Oil-fired burners differ primarily in the methods used to atomize the oil prior to combustion. Steam atomization is used almost exclusively in fired heaters. Steam atomized oil burners can be divided into two categories: conventional and staged combustion air oil burners. Conventional oil burners have a single combustion zone in which all of the air is fed to the atomized fuel oil. Staged combustion air oil burners make use of at least two separate air injection sections. Decreased NO_x emissions are achieved with these burners by operating a primary air/fuel injection section at substoichiometric air conditions and injecting secondary air downstream of the primary section to complete combustion.

Although adjustments of the combustion air distribution between the primary and secondary air registers is not used as a practical response to minor fluctuations in heater performance, the combustion air distribution can be adjusted to increase flame length (and reduce peak flame temperature), and thus minimize NO_x emissions.

As discussed in Section 4.3.7, the use of combustion air preheat causes an increase in the amount of NO_x formed by virtue of increased flame temperature. Increasing the degree of preheat will likewise cause an increase in NO_x emissions.

The firebox temperature required for a given application influences NO_x emissions because of the relation between firebox temperature and flame temperature. High firebox temperature applications are expected to have higher NO_x emissions. The fractional use of firebox capacity can reduce NO_x emissions by lowering firebox temperature.

Heater/boiler draft type affects NO_x emissions due to differences in the extent of fuel/air mixing between natural and mechanical draft air supply systems. For a given excess oxygen level and ambient combustion air supply, mechanical draft is expected to yield higher concentrations of NO_x than natural draft due to enhanced air/fuel mixing in the combustion zone and increased combustion intensity. However, since mechanical draft units can be operated at lower excess air levels and higher

thermal efficiencies than those with natural draft, the NO_x emission factor per unit of energy input under actual operating conditions could be lower for mechanical draft versus natural draft.

It is well demonstrated that an increase in the excess air level of a fired heater under typical operating conditions results in an increase in NO_x emissions due to the resulting higher peak flame temperature. Fired heaters are operated over a wide range of stack oxygen levels, depending largely on operator preference. Some excess air is required to ensure complete combustion, but operations are often well above this minimum required excess air level. The minimum stack oxygen level achievable for a given heater is a function of fuel type, draft type, the presence or absence of air leaks, burner design, rate of fuel/air mixing, and the method of distributing air to the burners in multiple burner furnaces. Minimum oxygen levels are expected to be higher for oil firing than for gas firing because of the inherent problems associated with combustion air/fuel oil mixing. Because mechanical draft allows more precise control of combustion air supply, they can be operated at lower excess air levels than with natural draft. Similarly, the minimum possible long term average excess air levels that can be achieved in new fireboxes is expected to be lower than that demonstrated for existing heaters/boilers because of the absence of air leaks, better air and fuel controls, etc. in new equipment.

3.4 MUNICIPAL WASTE AND SLUDGE INCINERATORS

3.4.1 Source Description

The most common type of refuse incinerator consists of a refractory-lined chamber with a grate upon which refuse is burned. Combustion products are formed by heating and burning of refuse on the grate. Municipal waste combustors (MWCs) include mass burn, modular, and refuse-derived fuel (RDF) combustors, with fluidized bed combustors being a minor subset of RDF. The most prevalent types of sewage sludge incinerators are multiple hearth and fluidized bed units. In multiple hearth units, the sludge enters the top of the furnace where it is first dried by contact with the hot, rising, combustion gases, and then burned as it moves slowly down through the lower hearths. At the bottom hearth, any residual ash is then removed. In fluidized bed reactors, the combustion takes place in a hot, suspended bed of sand with much of the ash residue being swept out with the flue gas. Temperatures in a multiple hearth furnace are 600°F in the lower, ash cooling hearth; 1,400 to 2,000°F in the central combustion hearths, and 1,000° to 1,200°F in the upper, drying hearths.[7] Temperatures in a fluidized bed reactor are fairly uniform, from 1,250 to 1,500°F. In both types of furnace, an auxiliary fuel may be required either during start-up or when the moisture content of the sludge is too high to support combustion. A more detailed description of MWC technology is available in Reference 8 to this report.

3.4.2 NO_x Emissions

The factors influencing production of fuel NO_x in an incinerator include the distribution of the combustion air (underfire versus overfire), the fuel nitrogen content, and the total excess air rates. Thermal NO_x formation rates increase with temperature, oxygen availability, heat release rate, and flue gas residence time at high temperature.

The relative contribution of fuel and thermal NO_x to the total NO_x emitted from an incinerator is dependent on the design and operation of the furnace and the nitrogen content of the refuse burned. Testing has demonstrated a seasonal increase in NO_x emissions during the summer months.[9] It is theorized that the higher emissions are due to the higher nitrogen content of the fuel because the raw refuse contains more yard waste, which has a high nitrogen content. At temperatures less than 2,000°F, typical of MWCs, NO_x emissions are influenced mainly by oxidation of fuel nitrogen. Thus, generally, 75-80 percent of the total NO_x emitted form incinerators may be fuel NO_x.[9]

SECTION 4

COMBUSTION CONTROLS FOR NO_X EMISSIONS

As discussed earlier, NO_x is formed in the combustion process from the nitrogen and oxygen in the combustion air and from organic nitrogen chemically bound within the molecular structure of the fuel. The key parameters controlling the rate of NO_x formation for a given fuel and combustor design are the local oxygen concentration, temperature, and time history of the combustion products. Each of these parameters, within the temperature range of NO_x formation, are determined by the system design and operation. The combustion system, therefore, determines the NO_x formed and represents the only control capability for reducing the rate of NO_x formation. Techniques concerned with reducing NO_x formation are applied in this region and are collectively referred to as "combustion controls". All other NO_x control techniques applied in downstream zones work to reduce the NO_x formed during combustion and are grouped in the category of post-combustion control (see Section 5). A listing of vendor contacts for combustion controls is presented in Appendix G.

Combustion control technologies discussed below are grouped according to the following source categories: combustion turbines, IC engines, and other. Combustion turbine controls discussed in Section 4.1 include dry control and wet injection. IC engine controls discussed in Section 4.2 include injection timing retard, pre-ignition chamber combustion, air to fuel ratio, and wet injection. The controls discussed in Section 4.3 are applicable to other combustion sources including boilers, process heaters, and municipal waste incinerators. These controls include low excess air, low NO_x burners, overfire air, burners out of service, flue gas recirculation, reburn, reduced combustion air temperature, and derating/load reduction.

4.1 COMBUSTION TURBINE CONTROLS

4.1.1 Dry Control

Extensive progress has been made in commercializing dry low NO_x combustors for natural gas-fired gas turbine applications.[10,11,12,13,14] NO_x reductions of up to 60 percent have been achieved, and in special instances, reductions of over 80 percent have been reported. Emissions in the range of 25-50 ppm at 15 percent O_2 have been achievable for the large, natural gas-fired heavy duty turbines.[10] One system is being offered which is targeted for 9 ppmv NO_x emission; (see Section 7.1.2, p. 51 and Reference 14). However, additional development is needed prior to commercialization of oil-fired applications.

Although combustors are proprietary, similarities among designs can be noted. The technologies are based upon reducing the flame turbulence and intensity, enhancing the fuel/air mixing, and establishing fuel-lean zones within the combustor. They generally rely on staged combustion with the first stage used as a pilot burner followed by a secondary stage of multiple fuel injection nozzles. The second stage often burns a lean, premixed fuel/air mixture in order to assure a uniform mixture and the avoidance of high temperature regions in the combustor. The control of the two burner zones and the preparation and control of premix air complicates the combustor control systems. The control system can be based on using variable geometry, and/or variable air flow scheduling.

The Japanese experience is that the combustion control needed to transfer load between burner stages (e.g. to transfer from low to high load) is difficult to achieve. A step change in NO_x emissions at the load transfer point indicates a step change in combustion conditions. Step changes are, in general, not desirable from the point of view of engine stability and durability. Impacts of the fuel preparation and control systems, and combustion hardware required by the dry low NO_x systems upon the reliability of the combustion system have not been demonstrated in the U.S. Technology applicable to one particular model is not directly transferable to another model.

4.1.2 Wet Injection

The principal requirements in using wet injection for NO_x reduction are to inject sufficient water or steam at the proper location in the flame envelope, and with appropriate dispersion, to reduce the peak flame temperature without degrading the combustion efficiency. Although it is easier to ensure uniform mixing if steam is used, water can be effective as well. Energy extracted from combustion to vaporize the water causes additional temperature reduction. Furthermore, steam may not be available.

The major factor affecting NO_x reduction is the water/steam-to-fuel ratio. The NO_x reduction achievable for a particular unit is directly related to the amount of water or steam which can be injected before serious impacts on combustor performance occur. The impacts include flame outs, reduced thermal efficiency expressed as a heat rate penalty, large increases in carbon monoxide (CO) and HC emissions, and pressure pulsations which result in significantly reduced combustor reliability. Higher corrosion rates may also be experienced. The highest ratio sustainable will vary depending on the tradeoff between NO_x emissions and CO and HC emissions and combustor design characteristics.

Water/steam injection can be accomplished in a variety of ways ranging from premixing with the intake air or fuel to injecting it directly into the combustor. The effectiveness of the method is a function of the atomization and mixing of the water/steam within the combustion charge. Metering and controls should be provided for injection at varying loads. Requirements for wet injection include a large water supply, on the order of the fuel rate, and water purification (to boiler feed water quality) to prevent corrosion. Wet injection is applicable to gas or liquid fuels.

4.2 STATIONARY INTERNAL COMBUSTION ENGINE CONTROLS

4.2.1 Injection Timing Retard

Ignition in a normally adjusted IC engine is set to occur shortly before the piston reaches its uppermost position (top dead center, or TDC). At TDC, the air or air-fuel mixture is at maximum compression. The timing of the start of injection or of the spark is given in terms of the number of degrees that the crankshaft must still rotate between this event and the arrival of the piston at TDC.

Retarding the timing beyond TDC, the point of optimum power and fuel consumption, reduces the rate of NO_x production. Retarding causes more of the combustion to occur during the expansion stroke, thus lowering peak temperatures, pressures, and residence times. This practice carries with it a fuel consumption penalty. Typical retard values range from 2° to 6° depending on the engine.[6] Beyond these levels, fuel consumption increases rapidly, power drops, and misfiring occurs. Also, HC, CO, and visible emissions increase, and elevated exhaust temperatures shorten exhaust valves and turbocharger service lives. Increasing the fuel injection rate has been used on some diesel systems to partially mitigate the CO and HC emissions and fuel consumption effects of retarded injection timing. A high injection rate, however, results in increased mixing of air and fuel and a subsequently hotter flame at the initiation of combustion. There is, therefore, a NO_x trade-off with this modification. Injection timing retard is an applicable control with all IC engine fuels.

4.2.2 Pre-Ignition Chamber Combustion - "Clean Burn" Technology

The use of a pre-ignition chamber can improve fuel efficiency and reduce NO_x emissions. The system is designed to burn lean fuel/air mixtures. The fuel charge is introduced into the pre-chamber as a rich mixture and ignited by a spark-plug. Since it burns in the absence of excess oxygen, NO_x formation is inhibited. This "torch" of burning fuel expands into the power cylinder where it thoroughly ignites a lean mixture at reduced temperatures. Therefore, combustion is completed in an overall lean mixture at temperatures which are adequate for combustion but below those where NO_x formation occurs. This NO_x control is currently applied to gas-fired engines only.

4.2.3 Air To Fuel Ratio

In injection type engines, which include all diesel and many dual fuel and gas varieties, the air to fuel ratio for each cylinder can be adjusted by controlling the amount of fuel that enters each cylinder. These engines are therefore operated lean where combustion is most efficient and fuel consumption is optimum.

The most practical use of air-to-fuel ratio adjustment as a control technique is to change the setting toward leaner operation. The oxygen availability will increase but so will the capability of the air and combustion products to absorb heat. Consequently, the peak temperature will fall, resulting in lower NO_x formation rates. The limiting factor for lean operation is the increased emissions of hydrocarbons at the lower temperatures.

Carbureted engines are beset by large variations in cylinder to cylinder air-to-fuel ratios. Therefore, they must operate near the stoichiometric ratio to ensure that no individual cylinder receives a charge which is too lean to ignite.

4.2.4 Wet Injection

As with combustion turbines, wet injection can reduce NO_x emissions from IC engines.[6] Wet control effectiveness correlates inversely with excess air levels. Since wet controls reduce peak temperature by increasing the charge mass, the technique is more effective in a low excess air system than in one with much excess air and hence, much thermal mass. Presumably, systems with high excess air absorb all the heat that can be transferred to a fluid in the short time between combustion and peak temperature. The application of this control to IC engines has been limited due to inaccessbility of water injection. A more plausible application of wet controls may be in the development of water-fuel mixture injection.

4.3 COMBUSTION CONTROLS FOR BOILERS, HEATERS, AND WASTE COMBUSTORS

There are two fundamental ways of controlling the flame stoichiometry: regulating the overall fuel/air ratio supplied (low excess air), or gross staging of combustion (low NO_x burners, overfire air ports, removing burners from service, derating, reburn). In addition to being influenced by burner design and fuel/air stoichiometry, the flame temperature can be reduced from its peak value by the introduction of heat absorbing inerts (recirculated flue gas) or by reduction in the temperature of the combustion air supplied to the burners.

4.3.1 Low Excess Air (LEA)

For all conventional combustion processes, some excess air is required in order to ensure that all fuel molecules can find and react with oxygen. In the LEA approach to NO_x control, less excess air (oxygen) is supplied to the combustor than normal, (see discussion of LEA on p. 19). The lower O_2 concentration in the burner zone reduces the flame temperature and the formation of thermal NO_x. In the starved-air flame zone, fuel bound nitrogen is converted to nitrogen thus reducing formation of fuel

NO_x. The limiting criteria which define minimum acceptable excess air conditions are increased emissions of carbon monoxide and opacity, and a reduction in flame stability.

With LEA firing, the primary concern is improved aerodynamic mixing and eliminating nonuniformities in air and fuel distributions. Adjustments of air registers, fuel injector positions, and overfire air dampers are operational controls which can reduce the minimum excess air level possible while still maintaining adequate air/fuel distribution. However, LEA controls require closer operator attention to ensure safe operation. Another requirement for continuous LEA operations is to employ continuous O_2 (and preferably CO) monitoring. Also, accurate and sensitive air and fuel flow controls and instrumentation are required for adjusting air flow at various loads.

New designs and most existing combustion operations will incorporate LEA firing as standard practice. LEA operation has an economic incentive since it results in increased fuel efficiency. The reduced airflow decreases the volume of combustion air to be heated, allowing more heat of combustion to be transferred, thus lowering fuel requirements for a given output. LEA operations may be used as the primary NO_x control method or in combination with other NO_x controls such as low-NO_x burners, overfire air, or flue gas recirculation. LEA operations are applicable to all combustion sources and fuels.

4.3.2 Low NO_x Burners (LNB)

Low NO_x burners control NO_x formation by carrying out the combustion in stages. These burners control the combustion staging at and within the burner rather than in the firebox. Low NO_x burners are designed to control both the stoichiometric and temperature histories of the fuel and air locally within each individual burner flame envelope. This control is achieved through design features which regulate the aerodynamic distribution and mixing of the fuel and air.

As with overfire air (see Section 4.3.3), the burner staging delays combustion and reduces the peak flame temperature, thus reducing thermal NO_x formation. The sub-stoichiometric oxygen introduced with the primary combustion air into the high temperature, fuel nitrogen evolution zone of the flame core reduces fuel NO_x formation. Thus, low-NO_x burners are effective for reducing NO_x emissions independent of fuel. There are two distinct types of designs for low NO_x burners: staged air burners and staged fuel burners.

Staged Air Burners--

Staged air burners (see Figure 6) have been in service since the early 1970's and were the first type of burner designed to specifically reduce NO_x emissions.[15] They are designed to reduce flame turbulence, delay fuel/air mixing, and establish fuel-rich zones for initial combustion. The reduced availability of oxygen in the initial combustion zone inhibits fuel NO_x conversion. Radiation of heat from

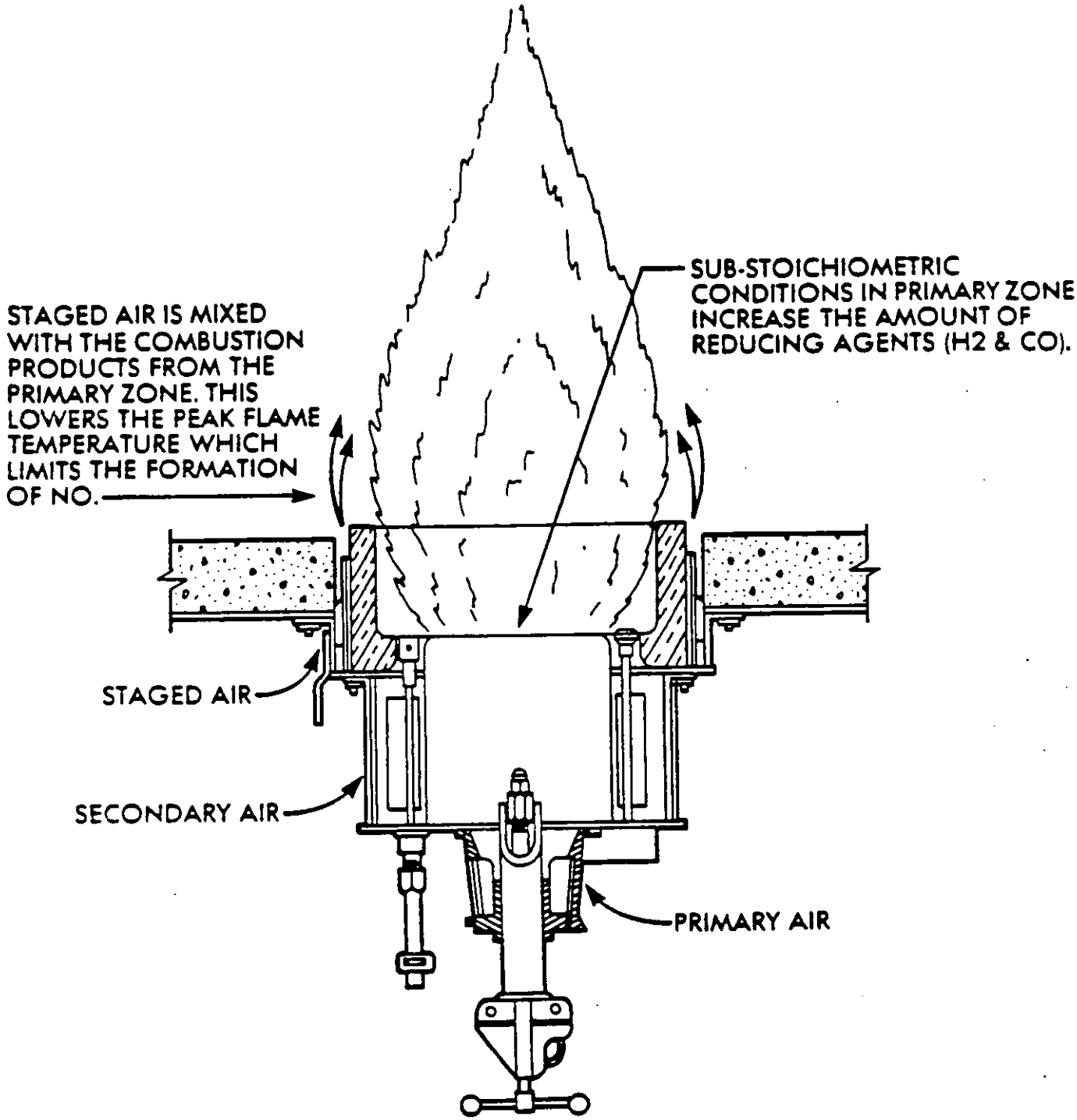

Figure 6. Staged Air Burner

the primary combustion zone results in reduced temperature as the final unburned fuel gases mix with excess air to complete the combustion process. The longer, less intense flames resulting from the staged stoichiometry lower flame temperatures and reduce thermal NO_x formation.

Staged air burners maintain the firebox in an oxidizing environment, minimizing slag/soot formation and corrosion potential when firing dirty fuels. Lower oxygen levels are also possible with all the combustion air admitted through the burners.

Staged air burners generally lengthen the flame configuration so their applicability is limited to installations large enough to avoid flame impingement on internal surfaces. The installation of replacement burners may require substantial changes in burner hardware, including air registers, air baffles and vanes, fuel injectors, and throat design. Existing burners can incorporate staged air burner features by modifying fuel injection patterns, installation of air flow baffles or vanes, or reshaping the burner throat. Staged air burners are effective with all fuel types.

Staged Fuel Burners--

A more effective concept for NO_x reduction is staging of the fuel rather than the air. Staged fuel burners (see Figure 7) mix a portion of the fuel and all of the air in the primary combustion zone.[15] The high level of excess air greatly lowers the peak flame temperature achieved in the primary combustion zone, thereby reducing formation of thermal NO_x. The secondary fuel is injected at high pressure into the combustion zone through a series of nozzles which are positioned around the perimeter of the burner. Because of its high velocity, the fuel gas entrains furnace gases and promotes rapid mixing with first stage combustion products. The entrained furnace gases simulate flue gas recirculation (see Section 4.3.6). Heat is transferred from the first stage combustion products prior to the second stage combustion. As a result, second stage combustion is achieved with lower partial pressures of oxygen and temperatures than would normally be encountered.

Unlike the staged air burner, staged fuel burners are only designed for gas firing. The staged fuel burner is able to operate with lower excess air levels than the staged air burner due to the increased mixing capability resulting from the high pressure second stage fuel injection. An additional advantage of the staged fuel burner is a compact flame. Cooling of the combustion products from the first stage zone in the staged air burner is accomplished primarily by radiation to the process. However, in a staged fuel burner the entrained furnace products give additional cooling to the flame. This particular characteristic permits more intense combustion with reduced NO_x levels.

4.3.3 Overfire Air (OFA)

In this combustion system, conventional burners are used to introduce the fuel and sub-stoichiometric quantities of combustion air (primary air). The remaining combustion air (secondary air) is introduced approximately 1/3 of the distance down the firebox through overfire air ports. The overfire

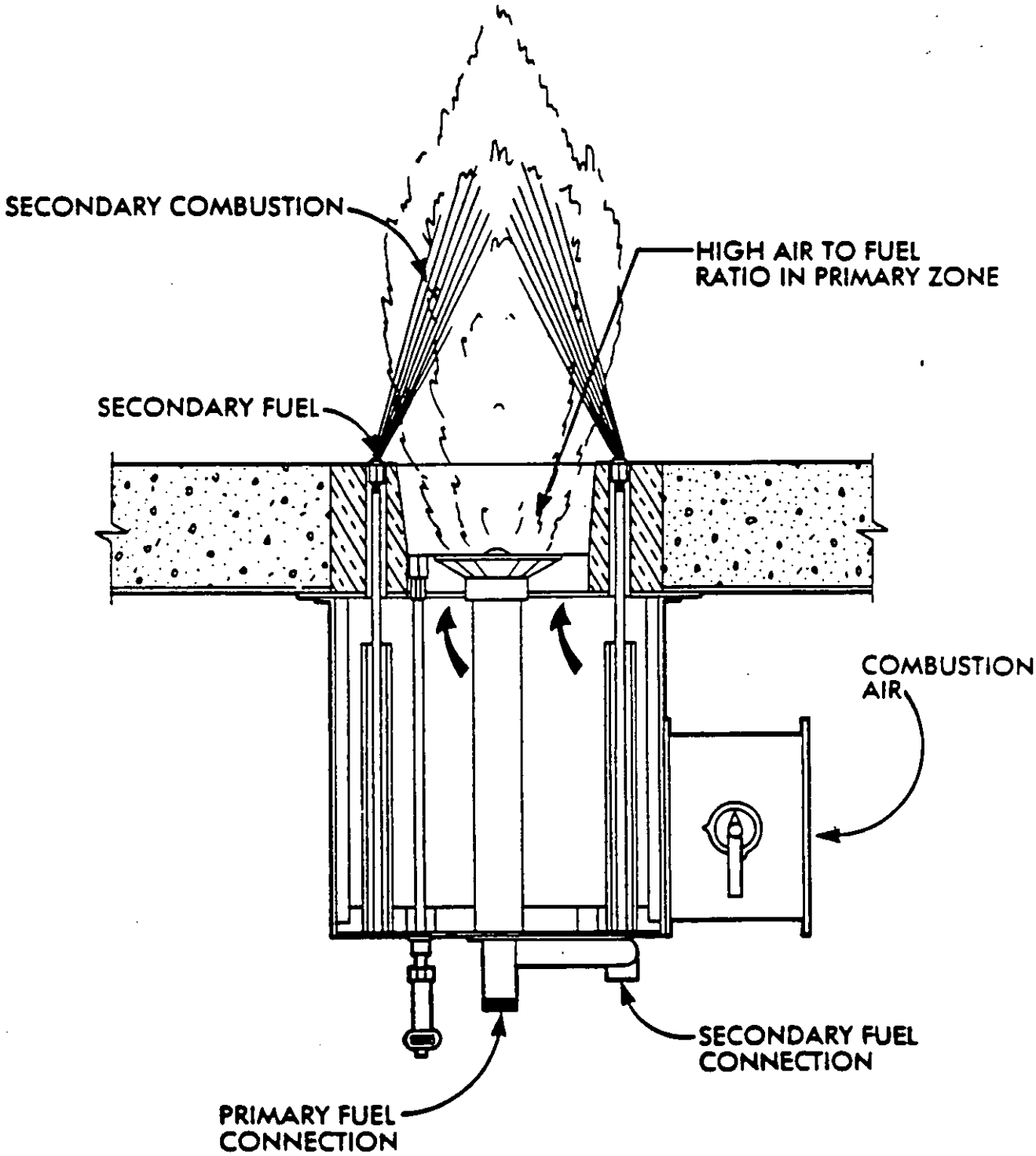

Figure 7. Staged Fuel Burner

air system reduces NO_x formation by two mechanisms. Staging the combustion air partially delays the combustion process, resulting in a cooler flame and suppressed thermal NO_x formation. The staging of the combustion air also allows deprivation of oxygen and less mixing of fuel and air in the combustion region where fuel nitrogen evolves, thereby reducing fuel NO_x formation.

The degree of staging is limited by operational problems (e.g., high CO and hydrocarbon emissions) due to low primary air flow rate creating incomplete combustion conditions. Also, a staged flame is larger and extends further into the furnace. This can lead to flame impingement causing refractory damage and/or tube failures. This diminishes the applicability of staging techniques for high heat release ranges.

This method is effective with all fuels.[7] However, there is an increased potential for furnace tube wastage due to local reducing conditions when firing coal or high sulfur fuel oil, There is also a greater tendency for slag accumulation in the furnace when firing coal. With reduced airflow to the burners, there may be reduced mixing of the fuel and air. Additional excess air may be required to ensure complete combustion, resulting in a decrease in efficiency. The OFA technique is more attractive in original designs than in retrofit applications for cost considerations. Additional duct work, firebox penetrations, and extra fan capacity may be required in retrofit situations. Physical obstructions or insufficient space between the top row of burners and the radiant section exit may not permit the installation of OFA ports and the enlarged combustion zone required.

4.3.4 Burners Out of Service

Burners out of service is a variation of the staged combustion technique for reduction of NO_x formation. It is a low cost retrofit NO_x control measure for existing fireboxes. Ideally, all of the fuel flow is diverted from a selected number of burners to the remaining firing burners. Since airflow is maintained unchanged among all the burners, a staged combustion effort is obtained. The fuel-admitting burners fire more fuel-rich than normal, with the remaining air required for combustion being admitted through the inactive burners. NO_x is reduced by decreasing the excess air available in the active burner zone. This reduces both fuel and thermal NO_x formation and thus, is applicable to all fuels.

In many cases, burners cannot handle any or all of the increased fuel flow, necessitating a significant reduction in the firing load rating. Since a reduction in load is not desirable and often not feasible, this technique is not always viable. Its application requires a minimum of four burners and extensive engineering on selection of burners out of service and control of air flow to ensure satisfactory staging conditions. It is usually most effective to place the air-rich burners or air ports in the region of highest heat release. To avoid flame stability and vibration problems, the number of burners taken out of service should not exceed 25 percent. Operational impacts such as corrosion and soot/slag formation are other significant considerations.

4.3.5 Reburn

Reburn, also referred to as in-furnace NO_x reduction or staged fuel injection (see Figure 8), involves passing the burner zone products through a secondary flame or fuel-rich combustion process. This process is designed to reduce NO_x formation without generating CO emissions. This NO_x control approach diverts a fraction of the fuel to create a secondary flame or fuel rich zone downstream of the burner (primary combustion zone). Sufficient air is then supplied to complete the oxidation process. These reactions are NO_x forming as well as NO_x reducing. Laboratory results indicate a maximum reduction in NO_x is achieved when the reburning zone stoichiometry is approximately 0.9 (90 percent theoretical air).[16] Other variables which are directly related to reburning effectiveness are burner zone NO_x concentration, reburning zone residence time, and temperature. The flame zone stoichiometry has been shown to have little influence.

Reburning can be implemented either by redistributing the fuel and air through the existing burner pattern or by installing additional fuel and air ports above the burner pattern. The latter approach is likely to yield the best results.

The burner pattern plus overfire air ports provides an existing, potential capability to implement the reburning NO_x control approach. In fact, the burners out of service (see Section 4.3.4) mode of operation implemented on some units to achieve fuel-rich primary combustion may also result in partial reburning. LEA and recirculated flue gas (see below) controls are combustion modification techniques often combined with reburning.

4.3.6 Flue Gas Recirculation (FGR)

The flue gas recirculation approach to NO_x control is based on recycling a portion of cooled flue gas back to the primary combustion zone. The flue gas recirculation system reduces NO_x formation by two mechanisms. The recycled flue gas is made up of combustion products which act as inerts during combustion of the fuel air mixture. This additional mass is heated and lowers the peak flame temperature, thereby reducing the amount of thermal NO_x formation. To a lesser extent, FGR also reduces thermal NO_x formation by lowering the oxygen concentration in the primary flame zone. The decrease in flame temperature alters the distribution of heat and lowers the fuel efficiency.

The recycled flue gas may be pre-mixed with the combustion air or injected directly into the flame zone. Discrete injection allows more precise control of the amount and location. In order for FGR to reduce NO_x formation, flue gas must enter the flame zone. FGR has been used for many years, principally as a means of improving temperature control at reduced firing rates. In this application, the flue gas is generally introduced below the burner or above the combustion zone.

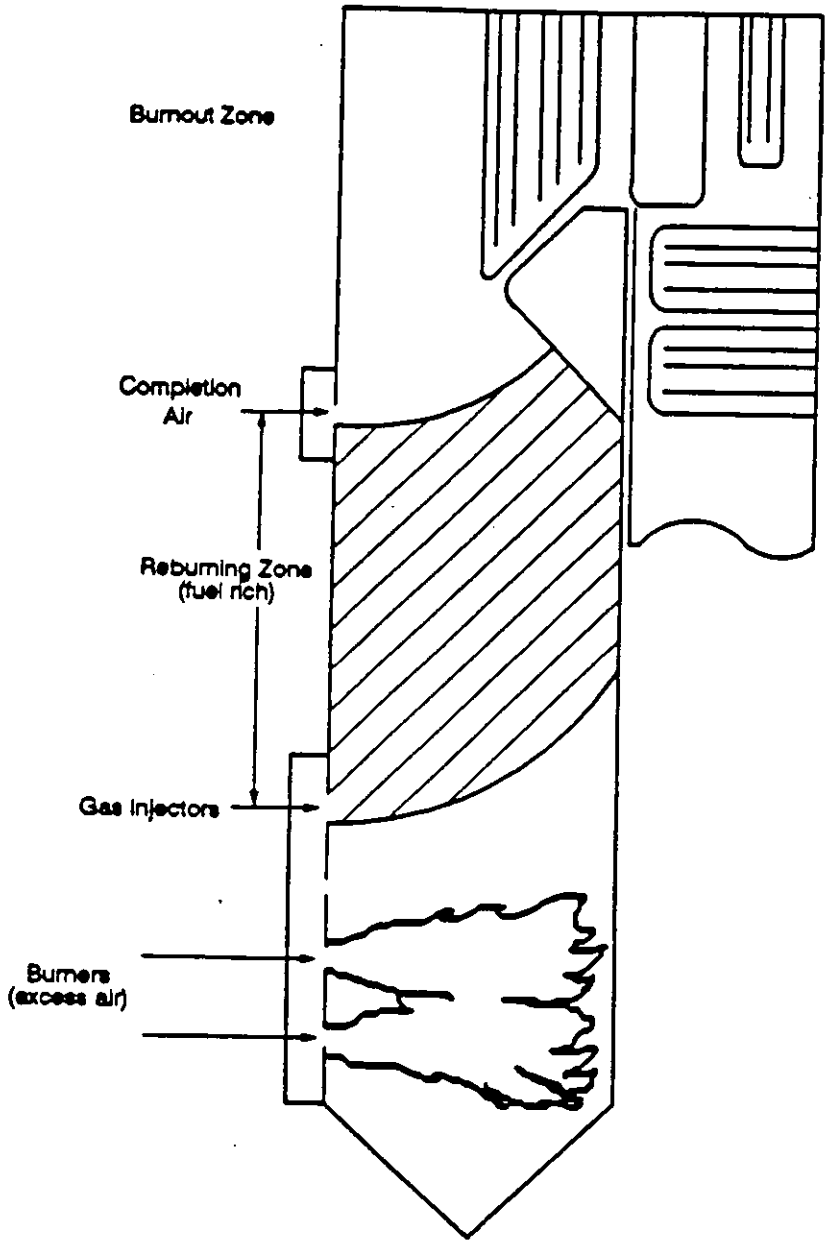

Figure 8. NO_x Reburning with Gas

As FGR beneficial effects are limited to reduction of thermal NO_x, the technique is applied primarily to natural gas or distillate oil combustion. In these applications, the thermal NO_x component is virtually 100 percent of the total NO_x. The amount of recirculation is limited by flame stability. Typically, 15-20 percent is employed. Flue gas recirculation for NO_x control is more adaptable to new designs than as a retrofit application.

4.3.7 Reduced Combustion Air Temperature

This NO_x control technique is limited to equipment with combustion air preheaters. For fired heater and boiler applications all of or a fraction of the combustion air bypasses the preheater. Reducing the amount of combustion air preheat lowers the primary combustion zone peak temperature, which inhibits thermal NO_x production. Because the beneficial effects are limited to the reduction of thermal NO_x, this approach is economically attractive for only natural gas and distillate oil fuel applications.

Although NO_x emissions decrease significantly with reduced combustion air temperature, significant loss in efficiency will occur if flue gas temperatures leaving the stack are increased as a consequence of bypassing the air preheaters. Enlarging the surface area of existing economizers or installation of an economizer in place of an air preheater can be used to partially recover the heat loss.

4.3.8 Derating/Load Reduction

Thermal NO_x formation generally increases as the heat release rate or combustion intensity increases. Reduced combustion intensity can be accomplished by load reduction, or derating, in existing units and by installation of an enlarged firebox in new units. Reduced firing rates can lead to several operational problems. The reduced mass flow can cause improper fuel-air mixing during combustion, creating CO and soot emissions. This situation is alleviated by operating at excess air levels higher than normally maintained at the original design load. This increase in O_2 levels reduces thermal operating efficiency and increases fuel NO_x generation. The net effect of decreasing thermal NO_x formation while increasing fuel NO_x is case specific.

When the combustion unit is designed for a reduced heat release rate, the problems associated with derating are largely avoided. An enlarged firebox produces NO_x reduction similar to load reduction on existing units, without necessitating an increase in excess air levels. This NO_x control is applicable to all fuel types.

SECTION 5

POST-COMBUSTION NO_X CONTROL TECHNOLOGIES

This section describes NO_x reduction techniques applied downstream of the combustion zone to reduce the NO_x formed during the combustion process. The three post-combustion NO_x control technologies described include selective catalytic reduction (SCR), non-selective catalytic reduction (NSCR), and selective noncatalytic reduction (SNCR). A listing of control equipment vendor contacts is presented in Appendix G.

5.1 SELECTIVE CATALYTIC REDUCTION

A schematic of the SCR process is shown in Figure 9. In this process, ammonia (NH_3), usually diluted with air or steam, is injected through a grid system into the flue/exhaust gas stream upstream of a catalyst bed. On the catalyst surface, the ammonia reacts with NO_x to form molecular nitrogen and water. Depending on system design, NO_x removal of 80-90 percent and higher are achievable. The major reactions that occur in the presence of the catalyst are the following:

$$6NO + 4NH_3 \rightarrow 5N_2 + 6H_2O \tag{4}$$

$$2NO + 4NH_3 + 2O_2 \rightarrow 3N_3 + 6H_2O \tag{5}$$

The reaction of NH_3 and NO_x is favored by the presence of excess oxygen (air-rich conditions). The primary variable affecting NO_x reduction is temperature. Optimum NO_x reduction occurs at catalyst bed temperatures between 600° and 750°F for conventional (vanadium or titanium-based) catalyst types, and 470°-510°F for platinum catalysts. Performance for a given catalyst depends largely on the temperature of the flue gas being treated (see Figure 10).[17] A given catalyst exhibits optimum performance between a temperature range of ±50°F for applications where flue gas O_2 concentrations are greater than 1%. Below this optimum temperature range, the catalyst activity is greatly reduced, allowing unreacted ammonia to slip through. Above 850°F, ammonia begins to be oxidized to form additional NO_x. The ammonia oxidation to NO_x increases with increasing temperature. Depending on the catalyst substrate material, the catalyst may be quickly damaged due to thermal stress at temperatures in excess of 850°F. It is important, therefore, to have stable operations and thus uniform flue gas temperatures for this process to achieve optimum NO_x control.

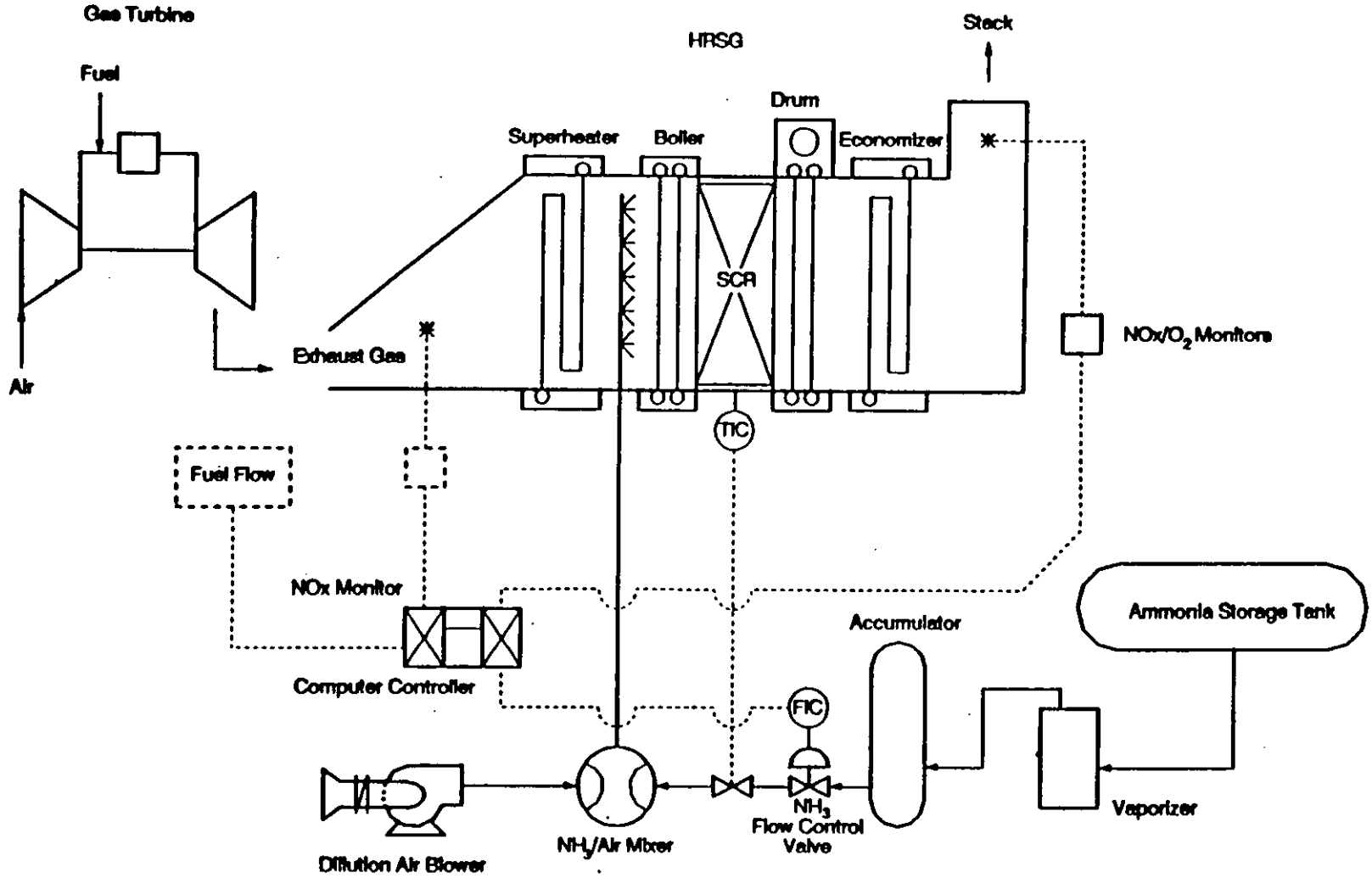

Figure 9. SCR System Process Flow Diagram for Gas Turbine/HRSG System
(HRSG: heat recovery steam generator)

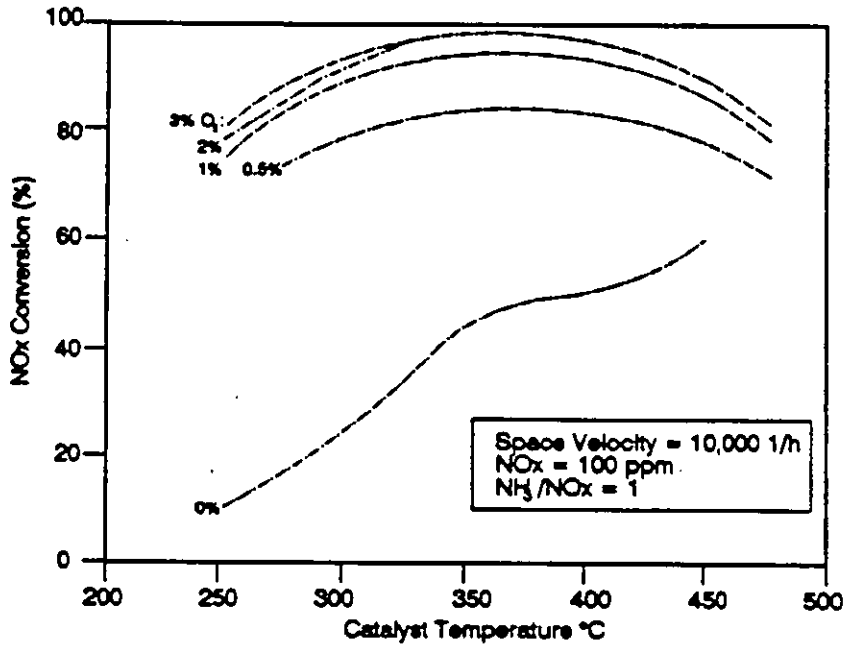

Figure 10. Effect of Temperature and Oxygen on NO_x Conversion

A new family of zeolite catalys: ;as been developed which are capable of functioning at higher temperatures than conventional catalysts. Zeolites are claimed to be effective over the range of 600° to 1,125°F, with the optimum temperature range stated as 675° to 1,075°F.[18,19,20] For zeolite catalysts and applications, ammonia oxidation to NO_x begins at around 850° and is predominant at temperatures in excess of 960°F.[20] Zeolites suffer the same performance and potential damage problems as conventional catalysts when used outside their optimum temperature range. In particular, at around 1020°F, the zeolite structure may be irreversibly degraded due to loss of pore density.[19] Zeolite catalysts have not been continuously operated commercially at temperatures above 960°F due to ammonia oxidation to NO_x and potential damage to the catalyst.[20]

With zeolite catalysts, the NO_x reduction reaction takes place inside a molecular sieve ceramic body rather than on the surface of a metallic catalyst. This difference is reported to reduce the effect of particulates/soot, SO_2/SO_3 conversion, heavy metals, etc. which poison, plug, and mask metal type catalysts. These catalysts have been in use in Europe since the mid-1980's, with approximately 100 installations on-stream.[19] Process applications range from gas to coal fuel. Typically, NO_x levels are reduced 80-90 percent. Refer to Appendix E where performance of SCR units employing zeolite catalysts are reported for some selected sites in West Germany. Zeolite catalysts are currently being purchased for U.S. installations.

The optimal effectiveness of the catalytic process is also dependent on the NH_3/NO_x ratio. Ammonia injection rates must be controlled to give a 1:1 NH_3/NO_x mole ratio. As the mole ratio of NH_3/NO_x increases to approximately 1:1, the NO_x reduction increases. Operating above a 1:1 ratio or with insufficient catalyst volume will result in unreacted ammonia slipping through the catalyst bed. On stream analyzers and quick feedback control are required to optimize the NO_x removal and minimize NH_3 emissions.

Another variable which affects NO_x reduction is space velocity, the ratio of flue gas flow rate to catalyst volume, or the inverse of residence time. For a given catalyst volume, increased flue gas rate decreases the conversion of NO_x. Conversely, for a given flue gas flow rate, increased catalyst volume improves the NO_x removal effectiveness.

Site-specific factors including operating temperatures and fuel type affect the performance and emission rates achievable with SCR. There are a number of operating considerations with SCR. First, potential catalyst poisoning by either metals, acid gases, or particulate entrainment is detrimental. For detailed discussion of SCR catalyst poisoning see Reference 21. The potential loss of catalyst activity due to these fuel effects results in the use of an excess of catalyst to maintain the required process efficiency over an extended period of time. Second, ammonia emissions result. In a properly designed and controlled system, ammonia emissions should be less than 10 ppm. Also, flue gas temperatures may not be in the proper operating range, which will require reheat. An increase in back pressure due to pressure drop across the catalyst results in a decrease in fuel efficiency. In addition, the formation of ammonium sulfate and bisulfate in the presence of SO_3 and unreacted ammonia presents corrosion

and plugging concerns in heat exchange equipment downstream of the reactor. Most of the problems have been successfully addressed in commercial operation, in the U.S. and abroad.

5.2 NON-SELECTIVE CATALYTIC REDUCTION (NSCR)

Non-selective catalytic reduction systems are often referred to as "three-way conversion" catalyst systems since they reduce NO_x, unburned hydrocarbon, and CO simultaneously. To operate properly, the combustion process must be with an air-to-fuel ratio slightly fuel-rich of stoichiometric. Under this condition, in the presence of the catalyst, the oxides of nitrogen are reduced by the carbon monoxide, resulting in nitrogen and carbon dioxide.

Sulfur resistant catalysts supports of titanium, molybdenum or tungsten are available for SO_3-laden stream applications. Deposits are controlled by control of NH_3 slip to below 5 ppmv.

For additional information on specific catalyst performances as a function of variables such as NH_3/NO ratio, space velocity, HN_3-slip, the reader should consult with contacts provides in Appendix G, pp. G-1 and G-2.

NSCR systems primarily utilize the following reaction in reducing NO_x:

$$2CO + 2NO_x \rightarrow 2CO_2 + N_2 \qquad (6)$$

The catalyst used to promote this reaction is generally a mixture of platinum and rhodium. The catalyst operating temperature limits are 700 to 1,500°F, with 800 to 1,200°F being the most desirable. Temperatures above 1,500°F result in catalyst sintering.

Typical NO_x conversion ranges from 80-95 percent with corresponding decreases in CO and HC. Potential problems associated with NSCR applications include catalyst poisoning by oil additives (e.g., phosphorous, zinc) and inadequate control systems.[22] NSCR is currently limited in application to IC engines with fuel rich ignition systems.

5.3 SELECTIVE NON-CATALYTIC REDUCTION (SNCR)

There are two commercially available selective non-catalytic reduction processes: Thermal $DeNO_x$®, which uses ammonia as the reducing agent, and NOxOUT®, which uses urea as the reducing agent. Each has their distinct differences but from a process approach they are similar.

5.3.1 Thermal $DeNO_x$®

Thermal $DeNO_x$® (TDN) developed by Exxon is an add-on NO_x control technique which reduces NO_x to N_2 without the use of a catalyst. Figure 11 shows a process flow diagram for a thermal $DeNO_x$ system applied to an oil- and gas-fired boiler. The TDN process injects gaseous ammonia to react with NO_x in the air rich flue gas. The ammonia and NO_x react according to the following competing reactions:

$$2NO + 4NH_3 + 2O_2 \rightarrow 3N_2 + 6H_2O \tag{7}$$

$$4NH_3 + 5O_2 \rightarrow 4NO + 6H_2O \tag{8}$$

Temperature is the primary variable for controlling the selective reaction. In the temperature range of 1,600°F to 2,200°F, the first reaction dominates, resulting in a reduction of NO_x. Above 2,200°F, the latter reaction dominate, causing increased NO_x production. Below 1,600°F, neither reaction is of sufficient activity to either produce or destroy NO_x. NO_x reduction performance is maximized in the relatively narrow temperature range of 1,600-1,900°F, with an optimum temperature of approximately 1,750°F. The 300° reaction window can be lowered to a range of 1,300-1,500°F by introducing hydrogen, a readily oxidizable gas.[23]

Without the use of catalyst to increase the reaction rates, adequate time at optimum temperatures must be available for the NO_x reduction reaction to occur. Design considerations should allow ample residence time and good mixing in the required temperature range. Long residence times (>1 second) at optimum temperatures will tend to promote relatively high performance even with less than optimum initial mixing or temperature/velocity gradients. However, when the NH_3 injection zone is characterized by low temperatures and/or steep temperature declines, a loss of process efficiency results.

The initial ratio of ammonia injected to NO_x concentrations is another parameter to control the process. Maximum NO_x reductions (40-60 percent) require 1.5-2.0 NH_3/NO_x injection ratios. At these ratios, significant concentrations of NH_3 can exit the convective zone, creating corrosive ammonium sulfates and/or a visible NH_3 stack plume.[1] (Unreacted ammonia emissions from a Thermal $DeNO_x$® system are usually higher than from SCR systems.)

Selection of the optimum NH_3 injection location also affects NO_x reduction performance and NH_3 slip. In most Thermal $DeNO_x$ applications today, the injection grids are being replaced by wall injectors. The temperatures and velocity profiles will change significantly with load. This necessitates the use of multiple NH_3 injection points to achieve the desired NO_x reduction for a range of operating loads.

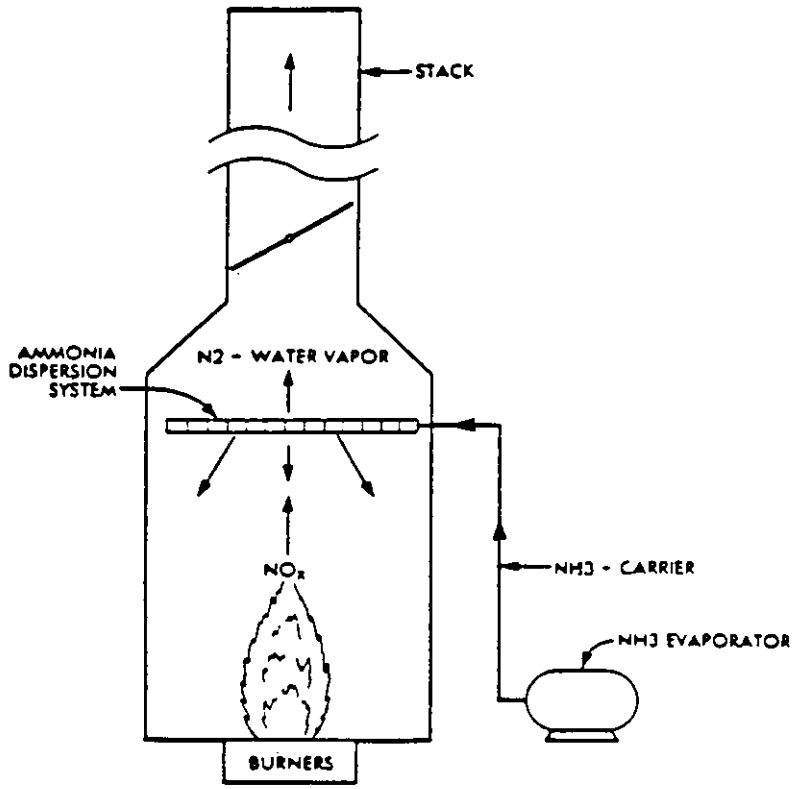

Figure 11. Schematic Diagram for Selective Non-Catalytic Reduction

5.3.2 NOxOUT®

In the NOxOUT® process, a urea type (or amine salt) compound is injected into the oxygen-rich upper furnace and/or high temperature convection section of a boiler to promote NO_x reduction as shown below:

$$NH_2 + NO \rightarrow N_2 + H_2O \tag{9}$$

The exact chemical mechanism is not fully understood, but involves the decomposition of urea $[C(N\ H_2)_2O]$. The likely decomposition products include the NH_2 groups. The reaction takes place at temperatures of 1,700 to 3,000°F.[24]

Originally developed for the Electric Power Research Institute (EPRI) in the late 1970's, the process is currently licensed by Fuel Tech where proprietary additives that allow NO_x reduction capability over a temperature range of 800-2,100°F have been developed. As with the other post-combustion NO_x control systems, temperature is the primary control variable for the selective reactions. NO_x reductions up to 80 percent are achievable with this technology.[24] The performance of the urea injection process is limited by the time/temperature/flow characteristics of the flue gas. Residence time in the temperature window and the urea to NO_x ratio impact the performance in a similar manner as for Thermal $DeNO_x$. The NO_x reduction capability is limited by mixing because the reaction times are relatively fast.

The capital costs associated with urea injection tend to be less than those of ammonia injection. Urea is injected in liquid form, eliminating the need for a compressor. The hazards of ammonia storage are also alleviated. The lower capital costs are offset however by higher operating costs; urea is more expensive than ammonia. The urea injection process may better accommodate changing conditions due to varying loads by altering the solution formulation, in addition to multiple injection points for varying temperature/load requirements.

Further information on TDN and NOxOUT performance are available from the two contacts provided in Appendix G, p. G-5.

SECTION 6

STATUS OF NO_X CONTROL TECHNOLOGY APPLICATIONS

This section describes the applications of NO_x control technologies to various combustion sources including combustion turbines, stationary IC engines, boilers/heaters, and waste incinerators. The emphasis is on commercial applicability of the technologies excluding those that are in the developmental and/or research stage.

The information presented in this section reflects the status of NO_x control applications in the U.S., Japan, and West Germany. Major sources of information used include the following:

(a) BACT/LAER Clearinghouse on-line data base

(b) EPA Region 9

(c) California Air Resources Board

(d) West Germany site visits (IC engine/boiler SCR applications; vendors)

(e) Environmental Catalyst Consultants, Inc.[25]

As pointed out in Sections 4 and 5, the applicability of a control technology is dependent on several factors including combustion source type and fuel type. Table 1 presents an overview of the NO_x control technology applications by combustion source type. The control technologies are divided into two major groups - combustion controls and post-combustion controls. The former comprises a variety of techniques described in Section 5. As shown in the table, combustion modifications and selective catalytic reduction have been applied to all of the combustion source types included in this study.

NO_x control technology applications are summarized by combustion source type as well as fuel type in the following subsections. Detailed listings by facility name, location, size, start-up/permit date, specific control technology, NO_x permit level, and state contact name are provided in Appendices A through D. Although the emphasis is on applications in U.S., information on NO_x control technology applications in West Germany and Japan are also presented in this section (see Appendices E and F, respectively).

6.1 COMBUSTION TURBINES

Table 2 summarizes the current NO_x control applications in U.S., Japan, and West Germany for combustion turbines fired with gas, dual fuel, and oil. In some of the applications identified, the specific

TABLE 1. NO_X CONTROL TECHNOLOGY APPLICABILITY[a,b]

Control Technology	Combustion Turbines	Stationary Combustion Engines	Boilers/ Heaters	Waste Incinerators
Combustion Controls[c]	X	X	X	X
Post-combustion Controls				
Selective catalytic reduction	X	X	X	X
Non-selective catalytic reduction		X		
Selective non-catalytic reduction			X	X

[a]Refer to Appendices A, B, C, D, E, and F for facility-specific data.
[b]Commercial applications in U.S., Germany, and Japan.
[c]Includes a variety of combustion techniques to reduce NO_x formation in the combustion zone depending on the source: wet injection, timing retard, staged combustion, low excess air, burners out of service, flue gas recirculation, overfire air, dry combustion controls, reduced air preheat, clean burn, and derating.

TABLE 2. NO_X CONTROL TECHNOLOGY APPLICABILITY - COMBUSTION TURBINES[a,b]

	Fuel		
Control Technology[c]	Natural Gas	Oil	Dual Fuel
Combustion Controls			
Wet injection	X	X	X
Dry low NO_x	X		
Combustor design		X	X
Post-combustion Controls			
Selective catalytic reduction	X	X	X

[a]Refer to Appendices A and F for facility-specific data.
[b]Commercial applications in U.S., Japan, and West Germany.
[c]May involve application of more than one control technology on a turbine (e.g., steam injection and selective catalytic reduction).

control technologies are implemented in conjunction with other technologies, for example, wet injection followed by selective catalytic reduction.

6.1.1 Combustion Controls

For gas-fired and dual fuel-fired combustion turbines, the primary methods of NO_x control are low-NO_x emitting combustor designs and/or injection of steam or water into the combustor. Low NO_x combustor design and wet injection are used either individually or simultaneously to achieve the required NO_x levels.

There are relatively few oil-fired combustion turbines in the U.S., and the NO_x combustion controls applied are the same as those applied for gas or dual fuel-fired turbines. About 40 percent of the 140+ combustion turbine applications identified are reported to use wet injection and about five percent are reported to employ low NO_x combustor design as methods for NO_x control. In about five percent of the applications, wet injection and low NO_x combustor design are collectively cited as the NO_x control method.

6.1.2 Selective Catalytic Reduction

This technology is the only post-combustion NO_x control technology widely applied to combustion turbines. In the data sets reviewed, SCR was reported as the applied technology in 30 percent of the applications . Majority of these applications involve SCR systems accompanied by wet injection as the preliminary NO_x control mechanism.

Geographically, application of SCR has been more common in California, followed by the Northeastern States, where the NO_x regulations are more strict than elsewhere in the U.S. Application of SCR to combustion turbines in the U.S. has been limited to gas or dual fuel-firing only. However, SCR has been applied to two kerosene-fired combustion turbines in Japan (see Appendix F).[26] One of these units is a 141 MW unit with an SCR system operating since 1981. The other SCR unit is installed on a 3 MW turbine and has been operating since 1984.

SCR catalyst life in turbine applications has generally exceeded expectations. In Japan gas-fired SCR applications are typically 8-10 yrs between catalyst changes. In the U.S. one installation is expecting 7 years catalyst life on a gas-fired turbine.[27]

6.2 STATIONARY INTERNAL COMBUSTION ENGINES

Commercially available control technologies IC applied to engines are summarized in Table 3 for four fuel type categories: natural gas, dual fuel, oil, and "other" which includes engines fired with

landfill gas, refinery gas, process gas, and digester gas. More than two thirds of the engines identified use natural gas as the primary fuel.

TABLE 3. NO_X CONTROL TECHNOLOGY APPLICABILITY - STATIONARY IC ENGINES[a,b]

Control Technology[d]	Fuel		
	Natural Gas/ Dual Fuel	Oil	Other[c]
Combustion Controls			
Injection timing retard	X	X	
Pre-ignition chamber combustion (clean burn)	X	X	
Air to fuel ratio	X		
Stratified charge	X		X
Turbocharging	X		
Wet injection	X		
Derating			X
Post-combustion Controls			
Selective catalytic reduction	X	X	X
Non-selective catalytic reduction	X		

[a]Refer to Appendices B, E and F for facility-specific data.
[b]Commercial applications in U.S., West Germany, and Japan.
[c]Landfill gas, refinery gas, process gas, and digester gas.
[d]May involve application of more than one control technology on an engine (clean burn engine and wet injection).

From an NO_x control viewpoint, the most important distinction between different engine models and types for reciprocating engines is rich-burn versus lean-burn. As indicated earlier, exhaust from rich-burn engines has little or no excess air while the exhaust from lean burn engines is characterized with medium to high levels of O_2.

6.2.1 Combustion Controls

For natural gas-fired engines, engine design in general and clean burn or pre-ignition chamber combustion have been the most commonly applied NO_x control technology in the past decade. These two technologies account for over 75 percent of the applications identified as permitted and/or applied in this study.

In oil-fired engines, the most common techniques employed include injection timing retard and clean burn.

6.2.2 Selective Catalytic Reduction

This technology has been applied only to lean-burn reciprocating and diesel engines where the exhaust gas O_2 concentrations are high as the SCR reaction mechanisms require presence of oxygen (See Section 5.1). In the U.S., applications have been limited to natural gas-fired engines in the past decade with a recent application to a dual fuel-fired diesel engine.[26] This unit has been operating since September 1988.

In Japan, SCR has also been applied to oil-fired diesel engines as well (see Appendix F). Two of these three units started operation in the 1978-1980 time frame, with another unit coming on-line in 1989. In West Germany, SCR has been applied to engines firing natural gas, dual fuel, landfill gas as well as oil. Table 4 identifies the IC engine SCR sites visited in Germany as part of this study and presents the information collected (see Appendix E for trip reports).

6.2.3 Non-selective Catalytic Reduction

As described in Section 5.2, application of NSCR requires fuel-rich engine operation or the addition of reducing agents in the flue gas upstream of the catalyst. Therefore, application of this technology has been limited to rich-burn engines. In this study, a number of NSCR applications on gas-fired rich burn engines have been identified. All of these engines are located in California and have been permitted in early to mid-1980s (see Appendix B).

6.3 NON-UTILITY BOILERS AND HEATERS

As indicated earlier, the applicability of a technology is influenced by several factors. For boilers and process heaters, the major factor is fuel type. Gas and oil-fired boilers and heaters have very similar characteristics with regard to boiler design and control applicability. Solid fuel (coal and wood) boilers and heaters have very different designs compared to oil/gas designs. Within the solid fuel boiler category, these designs include, pulverized coal, stoker (coal and wood), and fluid bed. Table 5 summarizes the current technology applications in the U.S. relative to the boiler and fuel type.

6.3.1 Combustion Controls

Low NO_x combustion technologies include the following air and fuel staging technologies which have been used jointly or individually: low excess air, over fire air, flue gas recirculation, and low NO_x

TABLE 4. WEST GERMANY SITE VISITS (IC ENGINES)[a]

Site	Size	Fuel	NO_x Control Technology	Start-up Date	Operating Hours (November 1989)	NO_x Permit Level
Stadtwerke Dreieich	155 kW (5 units)	Natural Gas	SCR (5 units)	1986	14,000 - 17,000	250 ppm at 12% O_2 (166 ppm at 15% O_2)
Stadtwerke Norderstedt	2MW (6 units)	Natural Gas	SCR (6 units)	December 1985	9000	425 ppm at 5% O_2 (158 ppm at 15% O_2)
Universitat	700 kW (2 units) 500 kW (2 units)	Natural Gas	SCR	1987	2000	230 ppm at 7% O_2 (96 ppm at 15% O_2)
Landeszentralbank	750 hp	Dual Fuel	SCR	January 1987	4800	266 ppm at 5% O_2 (99 ppm at 15% O_2)
Peissenberg	6 MW	Dual Fuel	SCR	December 1987	9300	532 ppm at 5% O_2 (197 ppm at 15% O_2)
Depogas	1.5 MW (3 units)	Landfill gas	SCR (3 units)	1988	600	225 ppm
Karl Reum	460 kW (3 units)	Propane	Combustion Modification	March 1989	2000	234 ppm at 8.2% O_2; source test (109 ppm at 15% O_2)

[a]See Appendix E for trip reports.

TABLE 5. NO_X CONTROL TECHNOLOGY APPLICABILITY - NON-UTILITY BOILERS AND HEATERS[a,b]

Control Technology	Coal	Coal/Wood		Gas/Oil
	Pulverized	Conventional	Fluid Bed	
Combustion Controls[c]	X	X	X	X
Low excess air				
Overfire air				
Flue gas recirculation				
Low NO_x burners				
Post-combustion Controls				
Selective catalytic reduction		X	X	X
Selective non-catalytic reduction		X	X	X

[a]Refer to Appendices C, E, and F for facility-specific data.
[b]Commercial applications in U.S., West Germany, and Japan.
[c]May involve concurrent application of more than one technology.

burners. Almost all recently permitted gas/oil and pulverized coal boilers use low NO_x burners. Most of these boilers also use other combustion modification technologies, with the most recently used technology combination being low NO_x burner plus flue gas recirculation.

Since 1985, over ten coal-fired boilers were permitted to use low NO_x combustion technologies as the primary method of NO_x control. Also, over 25 oil and gas fired boilers are identified as using low NO_x combustion technologies for NO_x control. Over half of these boilers are identified as employing low NO_x burner plus flue gas recirculation.

6.3.2 Selective Catalytic Reduction

On boilers and heaters, SCR has been applied at over 15 gas-fired refinery process heaters and boilers in California. (See Appendix C, pp. C-3 and C-4.) The refinery systems were permitted in early 1980s and the boiler systems were permitted in the late 1980's.

In Japan, SCR has been applied to over 50 industrial boilers firing gas, oil, and coal.[25] Over 60 percent of these boilers fire oil, followed by gas firing (25 percent), and coal firing (15 percent). The boiler sizes range from 50 to 1,500 million Btu per hour heat input with start-up dates from 1977 to 1989. See Appendix F for a listing of SCR applications in Japan on dirty fuels.

6.3.3 Selective Non-catalytic Reduction

SNCR technology has been widely applied to fluid bed combustion boilers and wood-fired boilers. Operation of these boilers is characterized by relatively low NO_x emissions and allows for sufficient residence time and mixing in the temperature window required by the technology. For example, fluid bed combustors have low emission levels of NO_x due to the low combustion temperatures (1600-1,800°F). These boilers have high temperature cyclones which are used to recycle char and bed material back to the fluid bed. The cyclones provide ideal mixing of ammonia with the combustion gases resulting in good removal efficiency with reasonable ammonia to NO_x ratios.

Since the mid-1980's, over 20 sites are identified as having permits granted based on the application of SNCR. Almost all of the sites are coal or wood/bioamass-fired fluid bed boilers and conventional wood/biomass-fired boilers. The exceptions involve gas-fired boilers and a CO boiler.

6.4 MUNICIPAL WASTE AND SLUDGE INCINERATION

Over 80 municipal waste sites are identified from the survey information as being permitted between 1980 and 1990 (see Appendix D, Table D-1). Table 6 summarizes the application status of NO_x controls for waste incineration. NO_x emissions are identified as being controlled using combustion controls at about 90 percent of the sites. The combustion controls identified include: boiler design/modification, combustion control, and overfire air.

6.4.1 Selective Non-catalytic Reduction

At seven sites (municipal waste/tire/sludge), SNCR was identified as the means of NO_x control. Except for two sites in California, the remaining were recently permitted in 1989 - 1990.

6.4.2 Selective Catalytic Reduction (Japan)

In Japan, application of SCR for controlling NO_x emissions from waste incineration has been extensive.[25] For example, two sites in Japan have operated with SCR systems since 1986. In addition, there are 16 SCR units on plants incinerating sewage sludge in Japan (see Appendix F).

TABLE 6. NO_X CONTROL TECHNOLOGY APPLICABILITY - WASTE INCINERATORS[a,b]

Control Technology	Municipal Waste
Combustion Modifications	
Boiler design	X
Overfire air	X
Combustion control	X
Post-combustion Controls	
Selective catalytic reduction	X
Selective non-catalytic reduction	X

[a]Refer to Appendices D and F for facility-specific information.

[b]Commercial applications in U.S. and Japan.

SECTION 7

NO_X CONTROL DATA

This section describes the NO_x control levels achieved using the technologies discussed in the previous section. The following subsections focus on the NO_x emission limits as specified in the permits (not necessarily identical to actual NO_x emission levels) by combustion source/fuel type and control technology. Facility-specific emissions limits as well as other information for each combustion source/facility are presented in Appendices A through D for combustion turbines, engines, boilers/heaters, and incinerators, respectively. Performance levels for the West German and Japanese units are summarized in Appendices E and F, respectively. Conversion factors for expressing NO_x limits as ppm at 15 percent O_2, pounds per million Btu, grams per brake horsepower per hour, and mg per cubic meter are included in Appendix H.

7.1 COMBUSTION TURBINES

NO_x permit limits identified for the turbines included in this study are summarized in Table 7, organized by fuel type and control technology applied.

7.1.1 Combustion Controls/Wet Injection

As indicated in Section 6, wet injection is the most commonly applied NO_x control technology for gas turbines. The NO_x permit limits shown in Table 7 reflect the performance levels considered achievable when water or steam injection is the only control applied (i.e., not in conjunction with SCR or other combustion controls). The wide range of performance for gas-fired and dual fuel-fired turbines are indications of the increasing stringency of NO_x permit levels in the country throughout the past decade, particularly in California and the Northeastern States.

For gas-fired turbines, most of the recent permits have specified 25 to 42 ppm at 15 percent O_2 as the NO_x limit. For dual fuel-fired turbines, NO_x limits are specified for both gas firing and oil firing. These levels have ranged from 25 to 79 ppm and 40 to 129 ppm at 15 percent O_2 over the past decade for gas and oil, respectively. However, recent permits for dual fuel-fired turbines have commonly allowed for 25 to 42 ppm for gas firing and 40 to 65 ppm for oil firing, respectively, both at 15 percent O_2.

TABLE 7. NO_X CONTROL LEVELS - COMBUSTION TURBINES [a,b]

Control Technology	NO_X Permits Limits (ppm NO_X at 15% O_2)		
	Natural Gas	Oil	Dual Fuel
Combustion Controls			
Wet injection	25-195		25-79 (gas)/40-129 (oil)
Dry low NO_x	32-188		
Post-combustion Controls			
Selective catalytic reduction	5-25[c]	10-25[d]	8-10 (gas)/12-18 (oil)[e]

[a]Refer to Appendices A and F for facility-specific data.
[b]Commercial applications in U.S. and Japan.
[c]In combination with combustion controls.
[d]Units in Japan.
[e]Based on two units in Eastern U.S.

7.1.2 Combustion Controls/Dry Low NO_x

In the four permits identified where combustor design has been specified as the method of NO_x control, the NO_x limits range from 32 to 188 ppm, with the 32 ppm limit imposed on a unit permitted in 1990 in New York and the 188 ppm limit imposed on a unit permitted in 1981. In a few cases, combustor design and wet injection have been reported together as the NO_x control technology, with permit levels ranging from 25 to 75 ppm at 15 percent O_2.

Recognizing the pressure to reduce emissions, all major vendors have development programs that should allow them to provide guarantees of 25 ppm or lower.[28] Some vendors now guarantee 25 ppm with special low NO_x combustors. Recently, a turbine has been sold with a NO_x emission guarantee of 9 ppm without water or steam injection (on natural gas) or SCR.[14] It is recognized, however, that the new generation of turbines will have difficulty matching these very low levels without water or steam injection because of the higher firing temperatures which make them inherently higher NO_x producers.[14,28]

7.1.3 Selective Catalytic Reduction

SCR is considered applicable, in combination with combustor design and/or wet injection, to reduce NO_x emission levels to 5-25 ppm at 15 percent O_2 on natural gas and dual fuel-fired turbines, as evidenced by the large number of permits issued recently in California and the Northeastern States. Most of the recent permit specifications involve NO_x levels of 5 to 10 ppm for gas firing. In the permits

identified for dual fuel-fired turbines, NO_x limits for gas firing are specified as 8.2 to 10 ppm, with the oil firing NO_x limits set at 11.7 to 40 ppm, both at 15 percent O_2.

Two turbines firing kerosene in Japan are identified as employing SCR to reduce NO_x emissions (see Appendix F). One of these turbines is a 141 MW unit equipped with an SCR system that has been in operation since 1981.[26] The SCR system reduces inlet NO_x levels of 60 to 80 ppm to 10 ppm at the outlet, both at 15 percent O_2. The second SCR system is installed on a 3 MW unit and is capable of reducing the inlet NO_x levels from 100 ppm to 25 ppm at 15 percent O_2. This unit has been operational since 1984.

7.2 STATIONARY INTERNAL COMBUSTION ENGINES

Table 8 summarizes the NO_x emission limits for the IC engine applications. These limits reflect the emission reductions achievable based on the fuel employed as well as the recent technological developments in NO_x control.

7.2.1 Combustion Controls

A majority of the ~120 IC engine applications identified implement combustion controls. For natural gas or dual fuel-fired engines that make up roughly 75 percent of the IC engine population in this study, primary controls involved clean burn or low NO_x engine design. The emission levels for these engines range from a low of 0.75 g/hp-hr (approximately 80 ppm at 15 percent O_2) for a recently permitted unit in California to a 16.5 g/hp-hr (approximately 1,760 ppm at 15 percent O_2) for a unit permitted in 1980 in Alabama. The recent developments and modifications in engine design have allowed for low levels for NO_x emissions. The unit visited in West Germany exhibits NO_x emission levels comparable to that observed in U.S.; 109 ppm at 15 percent O_2 on propane gas (see Appendix E for trip report).

Of the 17 oil-fired engine applications in U.S., 10 employ injection timing retard as the primary method of NO_x control. With this method, NO_x emission levels of 520 to 1,158 ppm of NO_x at 15 percent O_2 are considered achievable.

NO_x emission levels for nine engines operating on landfill gas and digester gas range from 1.5 to 2 g/hp-hr (approximately 160 to 210 ppm at 15 percent O_2). All of these units employ clean burn engines for NO_x control. The majority of these engines were permitted in early to mid-1980's. Except for one engine, the remaining eight are located in California.

TABLE 8. NO_X CONTROL LEVELS - STATIONARY INTERNAL COMBUSTION ENGINES[a,b]

Control Technology	NO_x Permit Limits		
	Natural Gas/ Dual Fuel	Oil	Other[c]
Combustion Controls	0.75 - 16.5 g/hp-hr (~80-1,760 ppm at 15% O_2)	520 - 1,158 ppm at 15% O_2	1.5 - 2 (160 to 210 ppm at 15% O_2)
Injection timing retard			
Pre-ignition chamber combustion (clean burn)			
Air to fuel ratio			
Stratiffied charge			
Turbocharging			
Wet injection			
Derating			
Post-Combustion Controls			
Selective catalytic reduction	70 - 90% (U.S.) 96 - 190 ppm at 15% O_2 (Germany)[d]	90 - 150 ppm (Japan)	
Non-selective catalytic reduction	1.0 - 1.5 g/hp-hr (110 to 160 ppm at 15% O_2)		

[a]Refer to Appendices B, E, and F for facility-specific data.
[b]Commercial applications in U.S., West Germany, and Japan.
[c]Landfill gas, refinery gas, process gas, digester gas.
[d]Site visits.

7.2.2 Non-selective Catalytic Reduction

Eight rich-burn engines are identified as implementing NSCR for NO_x control. All of these engines are located in California and have been permitted in early to mid-1980's. As shown in Table 8, NO_x emission limits required for these units range from 1.0 to 1.5 g/hp-hr (approximately 110 to 160 ppm at 15 percent O_2).

7.2.3 Selective Catalytic Reduction

Application of SCR to IC engines in U.S. has been limited. Of the two units identified in this study, one is a dual fuel-fired engine in Massachusetts and the other one is a natural gas-fired unit in

California.[28] The NO_x permit limits on these units are 40 tons/yr and 100 lb/day, with reported NO_x control efficiencies of 90 and 70 percent, respectively.

Of the three oil-fired engine/SCR applications in Japan, two have started operation in 1978 - 1980 with one start-up in 1989.[25] The two older units are reported to emit NO_x at 90 - 150 ppm levels.

As discussed in Section 6, SCR has been applied to natural gas, dual fuel, landfill gas, and oil-fired IC engines in West Germany. Of the six sites visited that employ SCR, thirteen engines at three of the sites fire natural gas; two engines at two sites fire dual fuel; and three engines at the remaining site fire landfill gas (see Table 4 on page 46; see Appendix E for trip reports). All of the SCR units at these sites employ zeolite catalysts and have been operational since 1985 - 1988. NO_x permit limits on dual fuel-fired engines are specified at 99 - 197 ppm (at 15 percent O_2) while the natural gas-fired engines are permitted at 98 - 166 ppm (at 15 percent O_2).

7.3 NON-UTILITY BOILERS AND HEATERS

Table 9 presents a summary of the NO_x control limits identified in this study for boilers and heaters by fuel type. NO_x control levels are presented for U.S. as well as Japanese applications, where available.

7.3.1 Combustion Controls

As indicated earlier, achievable NO_x emission levels are greatly dependent on fuel nitrogen. The NO_x levels reported for the different fuel types provide an illustration of the importance of this variable: 73-258 nanograms per Joule (approximately 40 to 145 ppm at 15 percent O_2) for coal-fired boilers and 7.7-43 nanograms per Joule (approximately 5 to 30 ppm at 15 percent O_2) for gas-fired boilers. Influence of boiler design is illustrated by the lower NO_x levels for coal-fired fluid bed boilers which are operated at lower temperatures than conventional boilers, hence resulting in lower emissions. The lowest emission limit of 7.7 nanograms per Joule is reported for a small gas-fired boiler. All of the gas-fired boilers are reported to employ a combination of combustion controls. Only two units fired with oil are identified. These residual oil-fired boilers have permit levels of 52-164 nanograms per Joule (approximately 30 to 100 ppm at 15 percent O_2).

7.3.2 Selective Non-catalytic Reduction

As discussed in Section 6.3.3, SNCR has been widely applied to fluid bed combustion boilers and wood-fired boilers. Other applications identified involve refinery heaters.

TABLE 9. NO_X CONTROL LEVELS - NON-UTILITY BOILERS AND HEATERS[a,b]

Control Technology	NO_x Emission Limits (nanogram/Joule)				
	Coal		Wood	Gas	Oil
	Conventional	Fluid Bed			
Combustion Controls[c]	73 - 258 (40-145 ppm)[d]	86 - 129 (50-75 ppm)[d]		7.7 - 43 (5 to 30 ppm)[d]	52 - 164 (30-100 ppm)[d]
Low excess air Overfire air Flue gas recirculation Low NO_x burners					
Post Combustion Controls					
Selective catalytic reduction	60 - 250 ppm (Japan)	213 ppm (Germany site visit)		13 - 21.5 (10 - 15 ppm)[d] 15 - 30 (Japan)	25 - 50 ppm (Japan)
Selective noncatalytic reduction	<--- 43 - 114 (25-65 ppm)[d] --->		--->	21.5 (15 ppm)[d]	64.5 (40 ppm)[d]

[a]Refer to Appendices C, E, and F for facility-specific data.
[b]Commercial applications in U.S., West Germany, and Japan.
[c]May involve concurrent application of more than one technology.
[d]At 15 percent O_2.

For the wood and coal-fired SNCR applications, about 70 percent of the sites have NO_x permit levels of 43 nanograms per Joule (approximately 25 ppm at 15 percent O_2) or less and the remaining sites have permit emission levels of 45 to 202 nanograms per Joule (approximately 25 to 35 ppm at 15 percent O_2). One site has a permit emission rate of 114 nanograms per Joule (approximately 65 ppm at 15 percent O_2), significantly higher than others.

Of the two heater/SNCR applications, the oil-fired steam generator has an emission limit of 65 nanograms per Joule (approximately 40 ppm at 15 percent O_2) and the process heater has an emission limit of 21.5 nanograms per Joule (approximately 15 ppm at 15 percent O_2). The much higher emission limit for the oil field generator is due to the fuel nitrogen content of the oil.

7.3.3 Selective Catalytic Reduction

On boilers and heaters, SCR has been applied at several gas-fired refinery process heaters and a few gas-fired boilers; all permitted in California. Permit emission levels for all of the sites are 13 to 21.5 nanograms per Joule (approximately 10 to 15 ppm at 15 percent O_2).

The coal-fired boiler site visited in West Germany employs three SCR units that started operation in 1985 - 1988 (see Appendix E). The permitted NO_x levels are specified at 213 ppm. In Japan, SCR has been applied to over 50 industrial boilers firing gas, oil, and coal (see Appendix F). Typical oil-fired boiler NO_x reductions range from 80 to 90 percent with emission levels of 25 to 50 ppm NO_x. In coal-fired boiler applications, emission reductions range from 40 to 80 percent with emissions of 60 to 250 ppm NO_x. NO_x reductions are 90 percent with emission levels of 15 to 30 ppm NO_x for typical gas-fired boiler applications.

7.4 MUNICIPAL WASTE AND SLUDGE INCINERATION

Table 10 summarizes the NO_x control levels considered achievable by state agencies for waste incinerators.

7.4.1 Combustion Controls

Emission levels for waste incinerators controlled by combustion controls range from 34 to 344 nanograms per Joule. Among the incinerator population controlled by combustion techniques, there are no apparent trends based on permit date. The majority of the incinerators have permit limits between 108 and 258 nanograms per Joule. The variation in permit levels is likely due to differences in state BACT/LAER determinations relative to incinerator type.

TABLE 10. NO_X CONTROL LEVELS - WASTE INCINERATION[a,b]

Control Technology	NO_X Emission Limit (nanograms/Joule)
Combustion Controls	34 - 344
Boiler design	
Overfire air	
Post-Combustion Control	
Selective catalytic reduction	21.5 - 43[c]
Selective non-catalytic reduction	32 - 146

[a]Refer to Appendices D and F for facility-specific information.
[b]Commercial applications in U.S. and Japan.
[c]Japanese applications.

7.4.2 Selective Non-catalytic Reduction

Permitted NO_X emission limits for the seven sites identified range from 32 to 146 nanograms per Joule. The tire burners have the lowest permit levels of 32 (California) and 52 (Connecticut) nanograms per Joule.

7.4.3 Selective Catalytic Reduction (Japan)

Two waste incineration sites in Japan have operated with SCR systems since 1986.[25] One system reduces NO_X by 45 - 55 percent for a flue gas having 100-150 ppm NO_X resulting in an emission rate less than 0.1 pounds per million Btu. The other system reduces NO_X by 70 - 80 percent for a flue gas having 100 - 160 ppm NO_X resulting in an emission rate less than 21.5 nanograms per Joule. There are 16 SCR units on plants incinerating sewage sludge in Japan (see Appendix F). These systems obtain 80 - 90 percent NO_X reduction also resulting in emission rates less than 21.5 nanograms per Joule.

SECTION 6

REFERENCES

1. Bosch, H. and Janssen, F. Catalytic Reduction of Nitrogen Oxides. A Review on the Fundamentals and Technology. Catalysis Today. Volume 2, No. 4, March 1988.

2. Johnson, R.H. and Wilkes, C.E. Emissions Performance of Utility and Industrial Gas Turbine. Paper presented at the American Power Conference, April 23-25, 1979.

3. Roessler, W.U., et al. Assessment of the Applicability of Automotive Emission Control Technology to Stationary Engines. EPA-650/2-74-051 (NTIS PB 237115), July 1974.

4. Chen, S.L., et al. Influence of Coal Composition on the Fate of Volatile and Char Nitrogen During Combustion. 19th Symposium (International) on Combustion. Published by Combustion Institute, Pittsburgh, PA, pp. 1271-1280, 1982. EPA-600/D-83-032 (NTIS PB83-183194). 1982.

5. U.S. Environmental Protection Agency. Standards Support and Environmental Impact Statement. Volume 1: Proposed Standards of Performance for Stationary Gas Turbines. Research Triangle Park, NC. EPA-450/2-77-017a (NTIS PB 272-422). September 1977.

6. U.S. Environmental Protection Agency. Stationary Internal Combustion Engines. Standards Support and Environmental Impact Statement. Volume 1: Proposed Standards of Performance. Research Triangle Park, NC. EPA-450/2-78-125a (NTIS PB83-113563). January 1979.

7. U.S. Environmental Protection Agency. Control Techniques for Nitrogen Oxides Emissions from Stationary Sources - Revised Second Edition. Research Triangle Park, NC. EPA-450/3-83-002 (NTIS PB84-118330). January 1983.

8. U.S. Environmental Protection Agency. Municipal Waste Combustors-Background Information for Proposed Standards: Control of NO_x Emissions, Vol. 4. Research Triangle Park, NC. EPA-450/3-89-27d (NTIS PB90-154873). August 1989.

9. Clarke, M.J. Technologies for Minimizing the Emission of NO_x from MSW Incineration. Paper presented at the International Conference on Municipal Waste Combustion, Hollywood, FL. April 11-14, 1989.

10. Angello, L. and Lowe, P. Gas Turbine Nitrogen Oxide (NO_x) Control-Current Technologies and Operating Experiences. In Proceedings: 1989 Joint Symposium on Stationary Combustion NO_x Control. San Francisco, CA. March 6-9, 1989, Vol. 2, EPA-600/9-89-062b (NTIS PB89-220537), p. 9-19, June 1989.

11. Angello, L. and Lowe, P. Dry Low NO_x Combustor Development for Electric Utility Gas Turbine Applications - A Status Report. Paper presented at the 34th ASME International Gas Turbine Conference. Toronto, Canada. June 4-8, 1989.

12. Trends in Low-NO_x Combustion Design and Experience. Gas Turbine World. Vol. 20, No. 2. March-April 1990. pp 12-15.

13. Davis, Jr., L.B. Dry Low NO_x Combustion for General Electric Heavy Duty Gas Turbines. In Proceedings: 82nd A&WMA Annual Meeting. Vol. 5, Paper 89/75.4, 25 pp. Published by Air & Waste Management Association. Pittsburgh, PA. 1989.

14. Siemens Getting Ready to Introduce a Family of Third-Generation Machines. Gas Turbine World. Vol. 20, No. 4. July-August, 1990, pp 12-14.

15. Martin, R.R. and Johnson, W.M. NO_x Control in Fired Heaters. Presented at 1984 Winter National Meeting of American Institute of Chemical Engineers. Atlanta, GA. March 11-14, 1984.

16. Bortz, S.J. and Offen, G.R. Reburning with Low and Medium Btu Gases. In Proceedings: 1987 Joint Symposium on Stationary Source Combustion NO_x Control (New Orleans, LA, March 1987), Vol. 1, EPA-600/9-88-026a (NTIS PB89-139695), p. 12-1, December 1988.

17. Ando, J. NO_x Abatement for Stationary Sources in Japan. EPA-600/7-79-205 (NTIS PB80-113673). August 1979.

18. Personal Communication. Watkins, S., Radian Corporation, with K. Burns, Engelhard Corporation. August 17, 1990.

19. Cer-NO_x. Ceramic Molecular Sieve (SCR) NO_x Abatement System. Steuler International Corporation, Mertztown, PA. Undated.

20. Personal Communication. Stone, D.K., Radian Corporation, with S.M. Turner, Norton Company, September 27, 1989.

21. Yang, R.T., et al. Catalyst Poisoning in the Selective Catalytic Reduction Reaction. In Proceedings: 1989 Joint Symposium on Stationary Combustion NO_x Control, San Francisco, CA, March 6-9, 1989, Vol. 2, EPA-600/9-89-062b, p. 8-1 (NTIS PB89-220537). June 1989.

22. Thring, R.H. and Hull, R.W. NO_x Control Technology Database for Gas-Fueled Prime Movers, Phase 1. Gas Research Institute, Chicago, IL. Report No. GRI-87/0229. April 1988.

23. Thermal $DeNO_x$ Process. Exxon Technology, Exxon Research and Engineering Company, Florham Park, NJ. Undated.

24. Hofmann, J.E., et al. NO_x Control in a Brown Coal-Fired Utility Boiler. In Proceedings: 1989 Joint Symposium on Stationary Combustion NO_x Control, San Francisco, CA. March 6-9, 1989, Vol. 2, EPA-600/9-89-062b (NTIS PB89-220537), p. 7A-53, June 1989.

25. Environmental Catalyst Consultants, Inc., P.O. Box 637, Springhouse, PA. 19477. Phone 215-628-4447.

26. Keller, F.L. and Feit, E. Pfizer Cogeneration Plant Uses Advanced NO_x Abatement System, Diesel and Gas Turbine Worldwide. June 1989.

27. Stambley, I. SCR Experience in U.S. Showing Better than Expected Performance, Gas Turbine World, Vol. 20, No. 2, March-April 1990, pp. 16-21.

28. Riley, J.R., et al. Can Manufacturing Capacity Keep Up with New Orders for CTs? Power Engineering, April 1990, pp 45-47.

APPENDIX A

NO_X CONTROL DATA

COMBUSTION TURBINES

Description of Terms Used in the Following Table(s)

Facility ID:	Identifier used in the BACT/LAER Clearinghouse or region/county where facility is located
Permit Date:	Permit or start-up date (unit may be canceled after permit approval)
NO_x Primary Limit:	NO_x permit limit
NO_x Secondary Limit:	NO_x permit limit expressed in different units or for back-up fuel
NO_x Control Efficiency:	NO_x control efficiency as stated in the permit
Contact Name:	State agency contact
A/F:	Air to fuel ratio
FGR:	Flue gas recirculation
LNB:	Low NO_x burner
LNC:	Low NO_x combustion
NSCR:	Non-selective catalytic reduction
SCR:	Selective catalytic reduction
SNCR:	Selective non-catalytic reduction

TABLE A-1. COMBUSTION TURBINES (GAS-FIRED AND DUAL FUEL-FIRED)

FACILITY ID	COMPANY NAME	FACILITY SIZE	PERMIT DATE	NOX PRIMARY PERMIT LIMIT
AK-0004	PRUDHOE BAY CONSORTIUM	303 MHP	09/29/81	150 PPM
AK-0005	CHUGACH ELECTRIC ASSOCIATION, UNIT #4	26 MW	08/06/82	130 LB/H
AK-0008	ANCHORAGE MUNICIPAL LIGHT & POWER	82 MW	10/15/84	75 PPM AT 15% O2, DRY
AK-0018	ALASKA ELECTRICAL GENERATION & TRANSMISSION	38 MW	03/29/85	75 PPM AT 15% O2
AK-0012	ALASKA ELECTRICAL GENERATION & TRANSMISSION	80 MW	03/18/87	75 PPMVD AT 15% O2
AL-0040	CHAMPION INTERNATIONAL	35 MW	11/30/88	42 PPM AT 15% O2
ARTESIA	O'BRIEN ENERGY SYSTEMS	22.2 MW		9 PPMV AT 15% O2
RICHMOND	CHEVRON	99 MW		10 PPMV AT 15% O2
BREA	SANTA FE ENERGY	11.6 MW		9 PPMV AT 15% O2
MODESTO	O'BRIEN ENERGY SYSTEMS	40.9 MW		5 PPMV AT 15% O2
SPRECKLES	AMERICAN COGENERATION TECHNOLOGY	57.6 MW		7 PPMV AT 15% O2
EL SEGUNDO	CHEVRON	77 MW		90% REDUCTION
GAVIOTA	CHEVRON	17.5 MW		19 PPMV AT 15% O2
WILMINGTON	COGENERATION COMPANY	3.3 MW		9 PPMV AT 15% O2
CORONA	CORONA COGENERATION, INCORPORATED	48 MW		6 PPMV AT 15% O2
CORONA	GRISWOLD CONTROLS	49.7 MW		9 PPMV AT 15% O2
CA-0274	MOJAVE COGENERATION CO., L.P.			10 PPMV AT 15% O2,DRY,GAS FIRING
CORONA	O'BRIEN ENERGY SYSTEMS	26.7 MW		9 PPMV AT 15% O2
SAN FRANCISCO	UNITED AIR LINES	21.8 MW		16 PPMV AT 15% O2
MARTINEZ	MARTINEZ COGENERATION	50 MW		25 PPMV AT 15% O2
KERN	KERN BLUFF LTD	48.6 MW		5 PPMV AT 15% O2
NEWHALL	TENNECO	22 MW		9 PPMV AT 15% O2
CA-0159	SIERRA LTD.	11.34 MMCF/D		4.04 LB/H EA
SANTA ANA	KLONDIKE EQUALITY ENTERPRISES	22 MW		9 PPMV AT 15% O2
CA-0044	CROWN ZELLERBACH, INC.	32 MW	03/01/82	42 PPM NO2 AT 15% O2

TABLE A-1. COMBUSTION TURBINES (GAS-FIRED AND DUAL FUEL-FIRED)

FACILITY ID	COMPANY NAME	NOX SECONDARY PERMIT LIMIT	NOX CONTROL
AK-0004	PRUDHOE BAY CONSORTIUM		DRY CONTROLS
AK-0005	CHUGACH ELECTRIC ASSOCIATION, UNIT #4	569 T/YR	WATER INJECTION
AK-0008	ANCHORAGE MUNICIPAL LIGHT & POWER		WET CONTROLS
AK-0018	ALASKA ELECTRICAL GENERATION & TRANSMISSION		H2O INJECTION
AK-0012	ALASKA ELECTRICAL GENERATION & TRANSMISSION		H2O INJECTION
AL-0040	CHAMPION INTERNATIONAL	67 LB/H	STEAM INJECTION
ARTESIA	O'BRIEN ENERGY SYSTEMS		SCR
RICHMOND	CHEVRON		SCR
BREA	SANTA FE ENERGY		SCR
MODESTO	O'BRIEN ENERGY SYSTEMS		SCR
SPRECKLES	AMERICAN COGENERATION TECHNOLOGY		SCR
EL SEGUNDO	CHEVRON		SCR
GAVIOTA	CHEVRON		SCR
WILMINGTON	COGENERATION COMPANY		SCR
CORONA	CORONA COGENERATION, INCORPORATED		SCR
CORONA	GRISWOLD CONTROLS		SCR
CA-0274	MOJAVE COGENERATION CO., L.P.	40 PPMV AT 15% O2, DRY,OIL FIRED	SCR AND STEAM INJECTION
CORONA	O'BRIEN ENERGY SYSTEMS		SCR
SAN FRANCISCO	UNITED AIR LINES		SCR
MARTINEZ	MARTINEZ COGENERATION		SCR
KERN	KERN BLUFF LTD		SCR
NEWHALL	TENNECO		SCR
CA-0159	SIERRA LTD.	0.016 LB/MMBTU	STEAM INJECTION & SCR
SANTA ANA	KLONDIKE EQUALITY ENTERPRISES		SCR
CA-0044	CROWN ZELLERBACH, INC.		WATER/STEAM INJECTION

TABLE A-1. COMBUSTION TURBINES (GAS-FIRED AND DUAL FUEL-FIRED)

FACILITY ID	COMPANY NAME	NOX CONTROL EFFICIENCY	CONTACT NAME	PHONE NUMBER
AK-0004	PRUDHOE BAY CONSORTIUM		DAVID TETTA	(206)-442-1193
AK-0005	CHUGACH ELECTRIC ASSOCIATION, UNIT #4		PAUL BOYS	(206)-442-1567
AK-0008	ANCHORAGE MUNICIPAL LIGHT & POWER		DAVE ESTES	(907)-465-2666
AK-0018	ALASKA ELECTRICAL GENERATION & TRANSMISSION		JON SANDSTEDT	(907)-465-2666
AK-0012	ALASKA ELECTRICAL GENERATION & TRANSMISSION		JON SANDSTEDT	(907)-465-2666
AL-0040	CHAMPION INTERNATIONAL	70	KEN BARRETT	(205)-271-7861
ARTESIA	O'BRIEN ENERGY SYSTEMS			
RICHMOND	CHEVRON			
BREA	SANTA FE ENERGY			
MODESTO	O'BRIEN ENERGY SYSTEMS			
SPRECKLES	AMERICAN COGENERATION TECHNOLOGY			
EL SEGUNDO	CHEVRON			
GAVIOTA	CHEVRON			
WILMINGTON	COGENERATION COMPANY			
CORONA	CORONA COGENERATION, INCORPORATED			
CORONA	GRISWOLD CONTROLS			
CA-0274	MOJAVE COGENERATION CO., L.P.		LINH TRAN	(415)-974-7631
CORONA	O'BRIEN ENERGY SYSTEMS			
SAN FRANCISCO	UNITED AIR LINES			
MARTINEZ	MARTINEZ COGENERATION			
KERN	KERN BLUFF LTD			
NEWHALL	TENNECO			
CA-0159	SIERRA LTD.	95.86	TOM PAXSON.	(805)-861-3682
SANTA ANA	KLONDIKE EQUALITY ENTERPRISES			
CA-0044	CROWN ZELLERBACH, INC.		DOUG WOLF	(415)-771-6000

TABLE A-1. COMBUSTION TURBINES (GAS-FIRED AND DUAL FUEL-FIRED)

FACILITY ID	COMPANY NAME	FACILITY SIZE	PERMIT DATE	NOX PRIMARY PERMIT LIMIT
CA-0047	SOUTHERN CALIF. EDISON CO.	64.5 MW EA	04/25/83	44.5 PPM
CA-0084	CARDINAL COGEN	464.4 MMBTU/H	06/29/83	42 PPM AT 15% O2
CA-0046	TOSCO CORP.	500 MMBTU/H	12/13/83	45 PPM AT 15% O2
CA-0098	SIMPSON COGENERATION PROJECT	3.08 MMBTU/H	01/06/84	3264 LB/D
CA-0064	UNIVERSITY CO-GENERATION LTD., 1983-I	38.7 MW	03/21/84	199 LB/D
CA-0095	NORTHERN CALIFORNIA POWER AGENCY	25.8 MW	09/05/84	62 PPMD AT 15% O2
CA-0095	NORTHERN CALIFORNIA POWER AGENCY	25.8 MW	09/05/84	42 PPMD AT 15% O2
CA-0105	IBM COGENERATION PROJECT	49 MW	12/01/84	25 PPM AT 15% O2
CA-0111	WITCO CHEMICAL CORP.	350 MMBTU/H	12/19/84	0.18 LB/MMBTU OIL
CA-0109	GETTY OIL CO.	3.5 MW	03/29/85	7.6 LB/H
CA-0139	NORTHERN CALIFORNIA POWER	25.8 MW	04/01/85	75 PPM
CA-0144	WILLAMETTE INDUSTRIES	230 MMBTU/H	04/26/85	15 PPMVD AT 15% O2
CA-0112	SHELL CALIFORNIA PRODUCTION CO.	22 MW	04/30/85	42 PPM AT 15% O2
CA-0067	PROCTOR & GAMBLE	217 MMBTU/H	06/07/85	62 PPM AT 15% O2, OIL
CA-0147	SUNLAW/INDUSTRIAL PARK 2	412.3 MMBTU/H	06/28/85	9 PPMVD AT 15% O2
CA-0122	GILROY ENERGY CO.	60 MW	08/01/85	25 PPMDV AT 15% O2
KERN	AMERICAN COGENERATION CORPORATION	23 MMBTU/HR	09/12/85	10 PPMV AT 15% O2
MONTEREY BAY	AMERICAN COGEN TECHNOLOGY	220.4 MMBTU/HR	09/16/85	17 PPMV AT 15% O2
CA-0115	ENERGY RESERVE, INC.	322.5 MMBTU/H	10/04/85	185.4 LB/D
CA-0155	UNION COGENERATION	16 MW	01/17/86	25 PPMV AT 15% O2
CA-0221	AES PLACERITA, INC.	519 MMBTU/H	03/10/86	629 LB/D
CA-0167	WESTERN POWER SYSTEM, INC.	26.5 MW	03/15/86	9 PPMVD AT 15% O2
CA-0136	KERN ENERGY CORP.	8.8 MMCF/D	04/18/86	8.29 LB/H
CA-0137	SOUTHEAST ENERGY, INC.	8 MMCF/D	04/18/86	8.29 LB/H
CA-0138	MORAN POWER, INC.	8 MMCF/D	04/18/86	8.29 LB/H

TABLE A-1. COMBUSTION TURBINES (GAS-FIRED AND DUAL FUEL-FIRED)

FACILITY ID	COMPANY NAME	NOX SECONDARY PERMIT LIMIT	NOX CONTROL
CA-0047	SOUTHERN CALIF. EDISON CO.	140 LB/H/TURBINE	WATER INJECTION
CA-0084	CARDINAL COGEN		STEAM INJECTION
CA-0046	TOSCO CORP.	75 LB/H	STEAM INJECTION
CA-0098	SIMPSON COGENERATION PROJECT		
CA-0064	UNIVERSITY CO-GENERATION LTD., 1983-I		H2O INJECTION, SCR
CA-0095	NORTHERN CALIFORNIA POWER AGENCY		H2O INJECTION
CA-0095	NORTHERN CALIFORNIA POWER AGENCY		H2O INJECTION
CA-0105	IBM COGENERATION PROJECT		H2O INJECTION; SCR
CA-0111	WITCO CHEMICAL CORP.	0.2 LB/MMBTU GAS	
CA-0109	GETTY OIL CO.	195 PPMVD AT 15% O2	H2O INJECTION
CA-0139	NORTHERN CALIFORNIA POWER		H2O INJ
CA-0144	WILLAMETTE INDUSTRIES		H2O INJ. W/SELECTIVE CATALYTIC REDUCTION
CA-0112	SHELL CALIFORNIA PRODUCTION CO.	35 LB/H	H2O INJECTION
CA-0067	PROCTOR & GAMBLE		H2O INJECTION
CA-0147	SUNLAW/INDUSTRIAL PARK 2		SCR & STEAM INJ.
CA-0122	GILROY ENERGY CO.		STEAM INJ./QUIET COMBUSTOR
KERN	AMERICAN COGENERATION CORPORATION		SCR
MONTEREY BAY	AMERICAN COGEN TECHNOLOGY		SCR
CA-0115	ENERGY RESERVE, INC.		WATER INJECTION & SELECTIVE CATALYTIC REDUCTION
CA-0155	UNION COGENERATION		H2O INJECTION & SCR
CA-0221	AES PLACERITA, INC.	7 PPMVD AT 15%	H2O INJECTION AND SCR
CA-0167	WESTERN POWER SYSTEM, INC.		H2O INJECTION, SELECTIVE CAT. REDUCTION
CA-0136	KERN ENERGY CORP.	0.023 LB/MMBTU	STEAM INJ. & LOW NOX CONFIG.; SCR
CA-0137	SOUTHEAST ENERGY, INC.	0.023 LB/MMBTU	STEAM INJ. & LOW NOX CONFIG.; SCR
CA-0138	MORAN POWER, INC.	0.02 LB/MMBTU	STEAM INJ. & LOW NOX CONFIG.; SCR

TABLE A-1. COMBUSTION TURBINES (GAS-FIRED AND DUAL FUEL-FIRED)

FACILITY ID	COMPANY NAME	NOX SECONDARY PERMIT LIMIT	NOX CONTROL
CA-0289	MONARCH COGENERATION	22 PPMVD AT 15% O2	SCR
CA-0288	MONARCH COGENERATION	22 PPMVD AT 15% O2	SCR
CA-0162	PG & E, STATION T	63 LB/H	STEAM INJ. AT STEAM/FUEL RATIO = 1.7/1
CA-0163	DOUBLE 'C' LIMITED		H2O INJ. & SELECTED CATALYTIC REDUCTION
CA-0164	KERN FRONT LIMITED	4.5 PPMVD AT 15% O2	H2O INJ. & SELECTED CATALYTIC REDUCTION
CA-0189	O'BRIEN ENERGY SYSTEMS/MERCHANTS REF.	15 PPMVD AT 15% O2	H2O INJ., & SCR
CA-0192	CITY OF SANTA CLARA		WATER INJECTION
CA-0177	MIDWAY - SUNSET PROJECT	16.31 PPMV	H2O INJECTION
S. COAST AQMD	CALIFORNIA INSTITUTE OF TECHNOLOGY		SCR
CA-0186	U.S. BORAX & CHEMICAL CORP.	25 PPM AT 15% O2 DRY	WATER/STEAM INJECTION; SCR
CA-0251	SAN JOAQUIN COGEN LIMITED	6 PPMVD AT 15% O2	H2O INJECTION AND FLUE GAS RECIRCULATION
CA-0230	POWER DEVELOPMENT CO.	9 PPMVD AT 15% O2	H2O INJECTION AND SCR
CA-0221	AES PLACERITA, INC.	9 PPMVD AT 15% O2	STEAM INJECTION AND SCR
CA-0221	AES PLACERITA, INC.	9 PPMVD AT 15% O2	STEAM INJECTION AND SCR
CA-0249	BAF ENERGY	30.1 LB/H	STEAM INJECTION AND SCR
CA-0262	MIDWAY-SUNSET COGENERATION CO.	140 LB/H EA, OIL FIRING	H2O INJ., "QUIET COMBUSTOR"
CA-0262	MIDWAY-SUNSET COGENERATION CO.	140 LB/H EA, OIL FIRING	H2O INJ., "QUIET COMBUSTOR"
CA-0262	MIDWAY-SUNSET COGENERATION CO.	140 LB/H EA, OIL FIRING	H2O INJ., "QUIET COMBUSTOR"
CA-0179	COMBINED ENERGY RESOURCES		WATER INJECTION AND SCR
CA-0179	COMBINED ENERGY RESOURCES		H2O INJ, LOW NOX DESIGN; SCR
CA-0297	MOBIL OIL	0.047 LB/MMBTU	H2O INJECTION MOLECULAR SIEVE TYPE CATALYST
CA-0293	MOBIL EXPLORATION & PRODUCING US, INC.	0.047 LB/MMBTU	H2O INJECTION AND SCR
CA-0296	TEXACO-YOKUM COGENERATION PROJECT	0.031 LB/MMBTU	
CA-0273	MOJAVE COGENERATION CO.	0.15 LB/MMBTU, OIL	
CA-0335	CITY OF ANAHEIM GAS TURBINE PROJECT		STEAM INJECTION AND SCR

TABLE A-1. COMBUSTION TURBINES (GAS-FIRED AND DUAL FUEL-FIRED)

FACILITY ID	COMPANY NAME	NOX CONTROL EFFICIENCY	CONTACT NAME	PHONE NUMBER
CA-0289	MONARCH COGENERATION		TOM PAXSON	(805)-861-3682
CA-0288	MONARCH COGENERATION		TOM PAXSON	(805)-861-3682
CA-0162	PG & E, STATION T	75	LINH TRAN	(415)-974-7631
CA-0163	DOUBLE 'C' LIMITED	95.8	TOM PAXSON	(805)-861-3682
CA-0164	KERN FRONT LIMITED	95.8	TOM PAXSON	(805)-861-3682
CA-0189	O'BRIEN ENERGY SYSTEMS/MERCHANTS REF.		DAVID CRAFT	(408)-443-1135
CA-0192	CITY OF SANTA CLARA		ELLEN LINDER	(415)-771-6000
CA-0177	MIDWAY - SUNSET PROJECT	73	TOM PAXSON	(805)-861-3682
S. COAST AQMD	CALIFORNIA INSTITUTE OF TECHNOLOGY	80	BRIEN YEH	(818)-572-6256
CA-0186	U.S. BORAX & CHEMICAL CORP.		LINH TRAN	(415)-974-7631
CA-0251	SAN JOAQUIN COGEN LIMITED	76	SEYED SADREDIN	(209)-468-3474
CA-0230	POWER DEVELOPMENT CO.		WILLIAN THOMPSON	(818)-572-6185
CA-0221	AES PLACERITA, INC.		ROBERT PEASE	(818)-572-6174
CA-0221	AES PLACERITA, INC.		ROBERT PEASE	(818)-572-6174
CA-0249	BAF ENERGY	80	FRED THOITS	(408)-443-1135
CA-0262	MIDWAY-SUNSET COGENERATION CO.		SHIRLEY RIVERA	(415)-974-7043
CA-0262	MIDWAY-SUNSET COGENERATION CO.		SHIRLEY RIVERA	(415)-974-7043
CA-0262	MIDWAY-SUNSET COGENERATION CO.		SHIRLEY RIVERA	(415)-974-7043
CA-0179	COMBINED ENERGY RESOURCES	81	TOM PAXSON	(805)-861-3682
CA-0179	COMBINED ENERGY RESOURCES	81	TOM PAXSON	(805)-861-3682
CA-0297	MOBIL OIL		F. THOITS	(408)-443-1135
CA-0293	MOBIL EXPLORATION & PRODUCING US, INC.	65	F. THOITS	(408)-722-7879
CA-0296	TEXACO-YOKUM COGENERATION PROJECT		F. THOITS	(408)-443-1135
CA-0273	MOJAVE COGENERATION CO.		TOM PAXSON	(805)-861-3682
CA-0335	CITY OF ANAHEIM GAS TURBINE PROJECT	69.6	FRED DEL ROSARIO	(818)-572-6439

TABLE A-1. COMBUSTION TURBINES (GAS-FIRED AND DUAL FUEL-FIRED)

FACILITY ID	COMPANY NAME	FACILITY SIZE	PERMIT DATE	NOX PRIMARY PERMIT LIMIT
CA-0320	BADGER CREEK LIMITED	457.8 MMBTU/H	10/30/89	0.0135 LB/MMBTU
CA-0318	O'BRIAN CALIFORNIA COGEN II, LIMITED	49.5 MW	01/04/90	350.4 LB/D
CO-0015	CIMARRON CHEMICAL INC.	271 MMBTU/H	08/01/89	65 PPMV AT 15% O2
CT-0027	DOWNTOWN COGENERATION ASSOC.	71.9 MMBTU/H	08/19/87	42 PPMVD AT 15% O2 GASFIRING
CT-0031	CCF-1	110 MMBTU/H GAS	05/18/88	36 PPMVD AT 15% O2 GASFIRING
CT-0022	O'BRIEN COGENERATION	499.9 MMBTU/H	08/08/88	39 PPMVD AT 15% O2 GASFIRED
CT-0022	O'BRIEN COGENERATION	499.9 MMBTU/H	08/08/88	39 PPMVD AT 15% O2 GASFIRED
CT-0025	CAPITOL DISTRICT ENERGY CENTER	738.8 MMBTU/H	10/23/89	42 PPMVD AT 15% O2 GASFIRING
DE-0006	DELMARVA POWER	100 MW	08/23/88	42 PPM
FL-0029	KISSIMMEE UTILITIES	400 MMBTU/H	03/30/84	79 PPM GAS FIRED
FL-0042	ORLANDO UTILITIES COMMISSION	35 MW	09/01/88	42 PPM AT 15% O2, GAS
FL-0043	TROPICANA PRODUCTS, INC.	45.4 MW	05/30/89	42 PPMDV AT 15% O2
KS-0009	VULCAN MATERIALS CO.	39.1 MW	07/23/81	NSPS
KY-0048	TEXAS GAS TRANSMISSION CORP.	14300 HP	02/26/88	0.015 % BY VOLUME
LA-0053	APPLIED ENERGY SERVICES	1412.5 MMBTU/H		414 LB/H
LA-0011	DOW CHEMICAL, USA	100 MW	11/14/83	1194 LB/H
LA-0054	BASF WYANDOTTE CO.	394.7 MMBTU/H	09/13/84	330 LB/H
MI-0054	MIDLAND COGENERATION VENTURE	984.2 MMBTU/H	02/16/88	42 PPMDV AT 15% O2
MI-0053	GREAT LAKES GAS TRANSMISSION	4000 HP	02/16/88	
MI-0053	GREAT LAKES GAS TRANSMISSION	12500 HP	02/16/88	
MI-0053	GREAT LAKES GAS TRANSMISSION	12500 HP	02/16/88	
MI-0082	ADA COGENERATION	245 MMBTU/H	06/21/88	42 PPMDV AT 15% O2, 1HAVG
NC-0051	PANDA-ROSEMARY CORP.	1047 MMBTU/H GAS	09/06/89	173 LB/H
NC-0051	PANDA-ROSEMARY CORP.	499 MMBTU/H GAS	09/06/89	83 LB/H
NC-0051	PANDA-ROSEMARY CORP.	1060 MMBTU/H OIL	09/06/89	277 LB/H

TABLE A-1. COMBUSTION TURBINES (GAS-FIRED AND DUAL FUEL-FIRED)

FACILITY ID	COMPANY NAME	NOX SECONDARY PERMIT LIMIT	NOX CONTROL
CA-0320	BADGER CREEK LIMITED		STEAM INJECTION AND SCR
CA-0318	O'BRIAN CALIFORNIA COGEN II, LIMITED	14.6 LB/H	SCR
CO-0015	CIMARRON CHEMICAL INC.		STEAM
CT-0027	DOWNTOWN COGENERATION ASSOC.	62 PPMVD AT 15% O2 OILFIRING	WATER INJECTION
CT-0031	CCF-1	63 PPMVD AT 15% O2 OILFIRING	WATER INJECTION
CT-0022	O'BRIEN COGENERATION	40 PPMVD AT 15% O2 OILFIRED	WATER INJECTION
CT-0022	O'BRIEN COGENERATION	40 PPMVD AT 15% O2 OILFIRED	WATER INJECTION
CT-0025	CAPITOL DISTRICT ENERGY CENTER	62 PPMVD AT 15% O2 OILFIRING	STEAM INJECTION
DE-0006	DELMARVA POWER		LOW NOX BURNER/H2O INJ.
FL-0029	KISSIMMEE UTILITIES	129 PPM OIL FIRED	WATER INJECTION
FL-0042	ORLANDO UTILITIES COMMISSION	65 PPM AT 15% O2 OIL	
FL-0043	TROPICANA PRODUCTS, INC.		STEAM INJECTION
KS-0009	VULCAN MATERIALS CO.		
KY-0048	TEXAS GAS TRANSMISSION CORP.	1813 T/YR	STEAM INJECTION
LA-0053	APPLIED ENERGY SERVICES		
LA-0011	DOW CHEMICAL, USA	188 PPMV	COMB. CONTRL
LA-0054	BASF WYANDOTTE CO.		COMBUSTOR DESIGN
MI-0054	MIDLAND COGENERATION VENTURE		STEAM INJ
MI-0053	GREAT LAKES GAS TRANSMISSION		
MI-0053	GREAT LAKES GAS TRANSMISSION		
MI-0053	GREAT LAKES GAS TRANSMISSION		
MI-0082	ADA COGENERATION		H2O INJECTION
NC-0051	PANDA-ROSEMARY CORP.	0.17 LB/MMBTU	H2O INJECTION
NC-0051	PANDA-ROSEMARY CORP.	0.17 LB/MMBTU	H2O INJECTION
NC-0051	PANDA-ROSEMARY CORP.	0.26 LB/MMBTU	H2O INJECTION

TABLE A-1. COMBUSTION TURBINES (GAS-FIRED AND DUAL FUEL-FIRED)

FACILITY ID	COMPANY NAME	NOX CONTROL EFFICIENCY	CONTACT NAME	PHONE NUMBER
CA-0320	BADGER CREEK LIMITED		TOM PAXSON	(805)-861-3682
CA-0318	O'BRIAN CALIFORNIA COGEN II, LIMITED		DAVID CRAFT	(408)-443-1135
CO-0015	CIMARRON CHEMICAL INC.		CATHY RHODES	(303)-331-8593
CT-0027	DOWNTOWN COGENERATION ASSOC.		MARK HULTMAN	(203)-566-8230
CT-0031	CCF-1		MARK HULTMAN	(203)-566-8230
CT-0022	O'BRIEN COGENERATION		MARK HULTMAN	(203)-566-8230
CT-0022	O'BRIEN COGENERATION		MARK HULTMAN	(203)-566-8230
CT-0025	CAPITOL DISTRICT ENERGY CENTER		MARK HULTMAN	(203)-566-8230
DE-0006	DELMARVA POWER		J. CUGNINI	(302)-736-4791
FL-0029	KISSIMMEE UTILITIES	40	TERESA HERON	(904)-488-1344
FL-0042	ORLANDO UTILITIES COMMISSION		BARRY ANDREWS	(904)-488-1344
FL-0043	TROPICANA PRODUCTS, INC.		BARRY ANDREWS	(904)-488-1344
KS-0009	VULCAN MATERIALS CO.		CHARLES WHITMORE	(913)-551-7020
KY-0048	TEXAS GAS TRANSMISSION CORP.		JAMES DILLS	(502)-564-3382
LA-0053	APPLIED ENERGY SERVICES		NAN KILLEEN	(504)-342-8940
LA-0011	DOW CHEMICAL, USA		BHARAT CONTRACTOR	(504)-342-8940
LA-0054	BASF WYANDOTTE CO.		BHARAT CONTRACTOR	(504)-342-8940
MI-0054	MIDLAND COGENERATION VENTURE		GREGORY EDWARDS	(517)-373-7023
MI-0053	GREAT LAKES GAS TRANSMISSION		LINDA WARDELL	(517)-373-7023
MI-0053	GREAT LAKES GAS TRANSMISSION		LINDA WARDELL	(517)-373-7023
MI-0053	GREAT LAKES GAS TRANSMISSION		LINDA WARDELL	(517)-373-7023
MI-0082	ADA COGENERATION	59	DHRUMAN SHAH	(517)-373-7023
NC-0051	PANDA-ROSEMARY CORP.		SAMMY AMERSON	(919)-733-3340
NC-0051	PANDA-ROSEMARY CORP.		SAMMY AMERSON	(919)-733-3340
NC-0051	PANDA-ROSEMARY CORP.		SAMMY AMERSON	(919)-733-3340

TABLE A-1. COMBUSTION TURBINES (GAS-FIRED AND DUAL FUEL-FIRED)

FACILITY ID	COMPANY NAME	FACILITY SIZE	PERMIT DATE	NOX PRIMARY PERMIT LIMIT
NC-0051	PANDA-ROSEMARY CORP.	509 MMBTU/H OIL	09/06/89	134 LB/H
NJ-0006	CIBA-GEIGY CORP.	4000 HP	01/03/85	11.06 LB/H
NJ-0008	COGEN TECHNOLOGIES	40 MW	06/03/87	9.6 PPMVD AT 15% O2
NV-0003	NEVADA PWR CO., CLARK STATION UNIT #7	73.5 MW	10/01/79	0.34 LB/MMBTU
NV-0005	NEVADA PWR CO., CLARK STATION UNIT #8	73.5 MW	09/11/80	0.34 LB/MMBTU
NY-0013	TBG/GRUMMAN	16 MW	03/10/88	75 PPM + NSPS CORREC
NY-0027	TRIGEN	193 MMBTU/H	07/01/88	0.2 LB/MMBTU
NY-0026	KAMINE CARTHAGE	113 MMBTU/H	07/01/88	0.1 LB/MMBTU, GAS
NY-0022	KAMINE SOUTH GLENS FALLS	40 MW	09/01/88	42 PPM, GAS
NY-0024	LONG ISLAND LIGHTING CO.	75 MW	11/01/88	55 PPM
NY-0031	INDECK - YERKS ENERGY SERVICES, INC.	40 MW	11/04/88	42 PPM AT 15% O2, GAS
NY-0032	L & J ENERGY SYSTEM COGENERATION	40 MW	01/15/89	42 PPM AT 15% O2, GAS
NY-0029	INDEC/OSWEGO HILL COGENERATION	40 MW	02/07/89	42 PPM AT 15% O2, GAS
NY-0037	MEGAN-RACINE ASSOCIATES, INC.	430 MMBTU/H	03/06/89	42 PPM GAS
NY-0038	EMPIRE ENERGY - NIAGARA COGENERATION CO.	416 MMBTU/H	05/02/89	42 PPM GAS FIRING
NY	KAMINE NATURAL DAM	50 MW	08/09/89	42 PPMV
NY-0033	KAMINE SYRACUSE COGENERATION CO.	79 MW	09/01/89	36 PPM, NAT GAS
NY	GAS SYRACUSE	79 MW	09/15/89	25 PPMV
NY-0040	JMC SELKIRK, INC.	80 MW	11/21/89	25 PPM GAS FIRING
NY-0039	FULTON COGENERATION ASSOCIATES	500 MMBTU/H	01/29/90	36 PPM GAS FIRING
NY-0036	ONEIDA COGENERATION FACILITY	417 MMBTU/H	02/26/90	32 PPM GAS
OR-0006	PACIFIC GAS TRANSMISSION CO.	14000 HP	05/19/87	154 PPM
PA-0027	TEXAS EASTERN TRANSMISSION CO.	18500 HP	07/07/82	150 PPM
PA-0052	AMTRAK	20 MW	10/12/88	42 PPM AT 15% O2
RI-0004	OCEAN STATE POWER	1059 MMBTU/H	12/13/88	9 PPMVD AT 15% O2

TABLE A-1. COMBUSTION TURBINES (GAS-FIRED AND DUAL FUEL-FIRED)

FACILITY ID	COMPANY NAME	NOX SECONDARY PERMIT LIMIT	NOX CONTROL
NC-0051	PANDA-ROSEMARY CORP.	0.26 LB/MMBTU	H2O INJECTION
NJ-0006	CIBA-GEIGY CORP.		H2O INJECTION
NJ-0008	COGEN TECHNOLOGIES		H2O INJECTION & SCR
NV-0003	NEVADA PWR CO., CLARK STATION UNIT #7		WATER INJECTION
NV-0005	NEVADA PWR CO., CLARK STATION UNIT #8		WATER INJECTION
NY-0013	TBG/GRUMMAN	0.2 LB/MMBTU	COMBUSTION CONTROLS AND H2O INJECTION
NY-0027	TRIGEN		COMBUSTION CONTROL
NY-0026	KAMINE CARTHAGE	0.145 LB/MMBTU, KEROSENE	COMBUSTION CONTROL
NY-0022	KAMINE SOUTH GLENS FALLS	65 PPM, OIL	STEAM INJECTION
NY-0024	LONG ISLAND LIGHTING CO.		WATER INJECTION
NY-0031	INDECK - YERKS ENERGY SERVICES, INC.	65 PPM AT 15%O2, OIL	STEAM INJECTION
NY-0032	L & J ENERGY SYSTEM COGENERATION	65 PPM AT 15% O2, OIL	STEAM INJECTION
NY-0029	INDEC/OSWEGO HILL COGENERATION	65 PPM AT 15% O2, OIL	H2O INJECTION
NY-0037	MEGAN-RACINE ASSOCIATES, INC.	65 PPM OIL	H2O INJECTION
NY-0038	EMPIRE ENERGY - NIAGARA COGENERATION CO.	65 PPM OIL FIRING	STEAM INJECTION
NY	KAMINE NATURAL DAM	65 PPMV	STEAM INJ
NY-0033	KAMINE SYRACUSE COGENERATION CO.	65 PPM, OIL	WATER INJECTION
NY	GAS SYRACUSE	65 PPMV	STEAM INJ
NY-0040	JMC SELKIRK, INC.	42 PPM OIL FIRING	STEAM INJECTION
NY-0039	FULTON COGENERATION ASSOCIATES	65 PPM OIL FIRING	H2O INJECTION
NY-0036	ONEIDA COGENERATION FACILITY		COMBUSTION CONTROL
OR-0006	PACIFIC GAS TRANSMISSION CO.	50.3 LB/H	COMBUSTION CONTROL
PA-0027	TEXAS EASTERN TRANSMISSION CO.		NATURAL GAS
PA-0052	AMTRAK		H2O INJ.
RI-0004	OCEAN STATE POWER		SCR AND H2O INJECTION

TABLE A-1. COMBUSTION TURBINES (GAS-FIRED AND DUAL FUEL-FIRED)

FACILITY ID	COMPANY NAME	NOX CONTROL EFFICIENCY	CONTACT NAME	PHONE NUMBER
NC-0051	PANDA-ROSEMARY CORP.		SAMMY AMERSON	(919)-733-3340
NJ-0006	CIBA-GEIGY CORP.	55	THOMAS MICAI	(609)-984-3033
NJ-0008	COGEN TECHNOLOGIES	95	WILLIAM KUEHNE	(609)-292-6716
NV-0003	NEVADA PWR CO., CLARK STATION UNIT #7		JIM HANSON	(415)-974-8038
NV-0005	NEVADA PWR CO., CLARK STATION UNIT #8		LARRY BOWERMAN	(415)-974-8213
NY-0013	TBG/GRUMMAN	78.7	JAMES HARRINGTON	(518)-457-2044
NY-0027	TRIGEN		JAMES HARRINGTON	(518)-457-2044
NY-0026	KAMINE CARTHAGE		JAMES HARRINGTON	(518)-457-2044
NY-0022	KAMINE SOUTH GLENS FALLS		JAMES HARRINGTON	(518)-457-2044
NY-0024	LONG ISLAND LIGHTING CO.		JAMES HARRINGTON	(518)-457-2044
NY-0031	INDECK - YERKS ENERGY SERVICES, INC.		JAMES HARRINGTON	(513)-457-2044
NY-0032	L & J ENERGY SYSTEM COGENERATION		JAMES HARRINGTON	(518)-457-2044
NY-0029	INDEC/OSWEGO HILL COGENERATION		JAMES HARRINGTON	(518)-457-2044
NY-0037	MEGAN-RACINE ASSOCIATES, INC.		JAMES HARRINGTON	(518)-457-2044
NY-0038	EMPIRE ENERGY - NIAGARA COGENERATION CO.		JAMES HARRINGTON	(518)-457-2044
NY	KAMINE NATURAL DAM		JAMES HARRINGTON	(518)-457-2044
NY-0033	KAMINE SYRACUSE COGENERATION CO.		JAMES HARRINGTON	(518)-457-2044
NY	GAS SYRACUSE		JAMES HARRINGTON	(518)-457-2044
NY-0040	JMC SELKIRK, INC.		JAMES HARRINGTON	(518)-457-2044
NY-0039	FULTON COGENERATION ASSOCIATES		JAMES HARRINGTON	(518)-457-2044
NY-0036	ONEIDA COGENERATION FACILITY		JAMES HARRINGTON	(518)-457-2044
OR-0006	PACIFIC GAS TRANSMISSION CO.		WENDY SIMS	(503)-229-6414
PA-0027	TEXAS EASTERN TRANSMISSION CO.		VERNON BUTLER	(215)-597-2711
PA-0052	AMTRAK		THOMAS HUYNH	(215)-875-5632
RI-0004	OCEAN STATE POWER		DOUG MCVAY	(401)-277-2808

TABLE A-1. COMBUSTION TURBINES (GAS-FIRED AND DUAL FUEL-FIRED)

FACILITY ID	COMPANY NAME	FACILITY SIZE	PERMIT DATE	NOX PRIMARY PERMIT LIMIT
RI-0008	PAWTUCKET POWER	533 MMBTU/H	01/30/89	9 PPMVD AT 15% O2 GASFIRING
TX-0130	PETRO-TEX CHEMICAL CORP.	982.3 MSCFH	12/21/82	237.9 LB/H
TX-0149	AMCO CHEMICALS CORP.	415 MMBTU/H	03/01/84	95 PPM
TX-0152	TEXAS PETRO CHEMICALS CORP.	92 MW	06/08/84	1047 T/YR
TX-0151	TEXAS GULF CHEMICALS CO.	78 MW	06/11/84	1366 T/YR
TX-0150	EXPLORER PIPELINE CO.	1100 HP	06/20/84	15.1 T/YR,5G/HP-HR
TX-0178	CHAMPION INTERNATIONAL CORP.	1342 MMBTU/H	03/05/85	720.34 T/YR
TX-0048	FORMOSA PLASTIC CORP.	38.4 MW	05/29/86	640 T/YR
VA-0161	RICHMOND POWER ENTERPRISE PARTNERSHIP	1163.5 MMBTU/H	12/12/89	8.2 PPMVD 15% O2 NAT GAS
VT-0005	ARROWHEAD COGENERATION CO.	282 MMBTU/H, GAS	12/20/89	9 PPMVD AT ISO COND &15%O2, 1H AVG
WA-0007	PUGET SOUND POWER & LIGHT	100 MW EA	08/23/82	480 LB/H

TABLE A-1. COMBUSTION TURBINES (GAS-FIRED AND DUAL FUEL-FIRED)

FACILITY ID	COMPANY NAME	NOX SECONDARY PERMIT LIMIT	NOX CONTROL
RI-0008	PAWTUCKET POWER	18 PPMVD AT 15% O2, OILFIRING	SCR
TX-0130	PETRO-TEX CHEMICAL CORP.		H2O INJECTION
TX-0149	AMCO CHEMICALS CORP.		STEAM INJECTION
TX-0152	TEXAS PETRO CHEMICALS CORP.		STEAM INJECTION
TX-0151	TEXAS GULF CHEMICALS CO.		STEAM INJECTION
TX-0150	EXPLORER PIPELINE CO.		
TX-0178	CHAMPION INTERNATIONAL CORP.		
TX-0048	FORMOSA PLASTIC CORP.		STEAM INJECTION
VA-0161	RICHMOND POWER ENTERPRISE PARTNERSHIP	11.7 PPMVD 15% #2 OIL	STEAM INJECTION AND SCR
VT-0005	ARROWHEAD COGENERATION CO.		WATER INJECTION AND SCR
WA-0007	PUGET SOUND POWER & LIGHT	2061 T/YR	WATER INJECTION

TABLE A-1. COMBUSTION TURBINES (GAS-FIRED AND DUAL FUEL-FIRED)

FACILITY ID	COMPANY NAME	NOX CONTROL EFFICIENCY	CONTACT NAME	PHONE NUMBER
RI-0008	PAWTUCKET POWER		DOUG MCVAY	(401)-277-2808
TX-0130	PETRO-TEX CHEMICAL CORP.		JIMMY RANDALL	(512)-451-5711
TX-0149	AMCO CHEMICALS CORP.	37	RANDY HAMILTON	(512)-451-5711
TX-0152	TEXAS PETRO CHEMICALS CORP.		J. RANDALL	(512)-451-5711
TX-0151	TEXAS GULF CHEMICALS CO.		J. RANDALL	(512)-451-5711
TX-0150	EXPLORER PIPELINE CO.		R. HAMILTON	(512)-451-5711
TX-0178	CHAMPION INTERNATIONAL CORP.		J. CUNNINGHAM	(512)-451-5711
TX-0048	FORMOSA PLASTIC CORP.		RANDY HAMILTON	(512)-451-5711
VA-0161	RICHMOND POWER ENTERPRISE PARTNERSHIP		ART ESCOBAR	(804)-786-6079
VT-0005	ARROWHEAD COGENERATION CO.	80	JOHN PERREAULT	(802)-244-8731
WA-0007	PUGET SOUND POWER & LIGHT		PAUL BOYS	(206)-442-1567

APPENDIX B

NO_X CONTROL DATA

STATIONARY INTERNAL COMBUSTION ENGINES

Description of Terms Used in the Following Table(s)

Facility ID:	Identifier used in the BACT/LAER Clearinghouse or region/county where facility is located
Permit Date:	Permit or start-up date (unit may be canceled after permit approval)
NO_x Primary Limit:	NO_x permit limit
NO_x Secondary Limit:	NO_x permit limit expressed in different units or for back-up fuel
NO_x Control Efficiency:	NO_x control efficiency as stated in the permit
Contact Name:	State agency contact
A/F:	Air to fuel ratio
FGR:	Flue gas recirculation
LNB:	Low NO_x burner
LNC:	Low NO_x combustion
NSCR:	Non-selective catalytic reduction
SCR:	Selective catalytic reduction
SNCR:	Selective non-catalytic reduction

TABLE B-1. STATIONARY IC ENGINES (GAS-FIRED)

FACILITY ID	COMPANY NAME	FACILITY SIZE	PERMIT DATE	NOX PRIMARY PERMIT LIMIT	NOX SECONDARY PERMIT LIMIT
BAAQMD	PG&E LOS MEDANOS COMPRESSOR	4130 HP	01/08/81	1.75 GRAMS/HP HR	275 LBM/DAY
BAAQMD	PAUL MASSON VINEYARDS COGENERATION	300 KW	03/27/81	30 PPM	
VENTURA	SANTA FE ENERGY SILVERTHREAD LEASE	180 HP	12/02/82	124 PPMV AT 15% O2	
CA-0073	SANTA FE ENERGY	180 HP	12/02/82	150 PPM	
VENTURA	ARGO PETROLEUM FERNDALE LEASE	200 HP	09/30/83	50 PPM AT 15% O2	
KCAPCD	NATURAL GAS PROGRESSIVE OPERATION	2133 HP	10/19/83	1.5 GRAMS/BHP HR	
MONTEREY	SOLEDAD COGENERATION ASSOCIATION	1100 KW	03/05/84	1 GRAM/BHP HR	4.7 LB/HR
KERN	SHELL CA PRODUCTION INCINERATOR/KERNRIDGE	1680 HP	05/29/84	4.05 LBM/HR	1.08 G/HP HR
CA-0260	SHELL CALIFORNIA PRODUCTION CO.	600 HP	11/14/84	100 LB/D	
CA-0078	SHELL CALIFORNIA PRODUCTION	225 BHP	12/02/85	50 PPMVD	0.805 G/HP-H
SAN DIEGO	SAN DIEGO MARRIOTT HOTEL TOWER I	1150 HP	03/09/87	1.4 GRAMS/BHP HR	280 PPMVD AT 3% O2
KINGS	CA DEPT OF CORRECTIONS/CORCORAN PRISON	31.46 MMBTU/HR	12/18/87	0.22 LBM/MMBTU	0.75 GRAMS/BHP HR
KERN	EXXON SAN JOAQUIN PRODUCTION	525 HP	04/25/88	27.84 LBM/DAY	1 GRAM/BHP HR
CO-0001	CO INTERSTATE GAS, CHEYENNE	12000 HP	09/12/80	158.6 LB/H	
CO-0001	CO INTERSTATE GAS, CHEYENNE	5130 HP	09/12/80	39.24 LB/H	
CO-0001	CO INTERSTATE GAS, CHEYENNE	5130 HP	09/12/80	68 LB/H	
CO-0002	CO INTERSTATE GAS, DEERTRAIL	6000 HP	10/24/80	79.3 LB/H	
CO-0002	CO INTERSTATE GAS, DEERTRAIL	425 HP	10/24/80	10.2 LB/H	
CO-0002	CO INTERSTATE GAS, DEERTRAIL	16000 HP	10/24/80	211.4 LB/H	
CO-0003	CO INTERSTATE GAS, FLANK	13320 HP	10/24/80	83.1 LB/H	
CO-0004	CO INTERSTATE GAS, KIT CARSON	16000 HP	09/12/80	211.4 LB/H	
CO-0004	CO INTERSTATE GAS, KIT CARSON	370 HP	09/12/80	8.9 LB/H	
CO-0005	CO INTERSTATE GAS, TOTEM/LONG	370 HP	09/12/80	8.9 LB/H	
CO-0005	CO INTERSTATE GAS, TOTEM/LONG	8550 HP	09/12/80	216.6 LB/H	
CO-0005	CO INTERSTATE GAS, TOTEM/LONG	1340 HP	09/12/80	53.16 LB/H	

TABLE B-1. STATIONARY IC ENGINES (GAS-FIRED)

FACILITY ID	COMPANY NAME	NOX CONTROL	NOX CONTROL EFFICIENCY	STATE CONTACT NAME	PHONE NUMBER
BAAQMD	PG&E LOS MEDANOS COMPRESSOR	STRAT. CHARGE & ENGINE MODIFICATION		B. NISHIMURA	(408)-443-1135
BAAQMD	PAUL MASSON VINEYARDS COGENERATION	NSCR		DOUG WOLF	(415)-771-6000
VENTURA	SANTA FE ENERGY SILVERTHREAD LEASE	COMPRESSOR DESIGN		KEITH DUVAL	(805)-654-2664
CA-0073	SANTA FE ENERGY			KEITH DUVAL	(805)-654-2664
VENTURA	ARGO PETROLEUM FERNDALE LEASE	NSCR	96	KEITH DUVAL	(805)-654-2664
KCAPCD	NATURAL GAS PROGRESSIVE OPERATION	NSCR, RICH BURN CAT CONVERTER	86	IVAN NZO	(805)-861-3682
MONTEREY	SOLEDAD COGENERATION ASSOCIATION	CATALYTIC CONVERTER-NSCR		B. NISHIMURA	(408)-443-1135
KERN	SHELL CA PRODUCTION INCINERATOR/KERNRIDGE	RICH BURN CATALYTIC CONVERTER	90	IVAN NZO	(805)-861-3682
CA-0260	SHELL CALIFORNIA PRODUCTION CO.	SCR	70	VIJI SADASIVAN	(818)-572-6214
CA-0078	SHELL CALIFORNIA PRODUCTION	NON-SELECTIVE CATALTYIC REDUCTION	90	KEITH DUVAL	(805)-654-2845
SAN DIEGO	SAN DIEGO MARRIOTT HOTEL TOWER I	LEAN BURN	92	BOB BATTEN	(619)-694-3316
KINGS	CA DEPT OF CORRECTIONS/CORCORAN PRISON	LEAN BURN/ENGINE DESIGN		MARK POINDEXTER	(209)-584-1411
KERN	EXXON SAN JOAQUIN PRODUCTION	NSCR, A/F		THOMAS PAXSON	(805)-861-3682
CO-0001	CO INTERSTATE GAS, CHEYENNE	DESIGN		JOHN DALE	(303)-837-3763
CO-0001	CO INTERSTATE GAS, CHEYENNE	DESIGN		JOHN DALE	(303)-837-3763
CO-0001	CO INTERSTATE GAS, CHEYENNE	DESIGN		JOHN DALE	(303)-837-3763
CO-0002	CO INTERSTATE GAS, DEERTRAIL	DESIGN		JOHN DALE	(303)-837-3763
CO-0002	CO INTERSTATE GAS, DEERTRAIL	DESIGN		JOHN DALE	(303)-837-3763
CO-0002	CO INTERSTATE GAS, DEERTRAIL	DESIGN		JOHN DALE	(303)-837-3763
CO-0003	CO INTERSTATE GAS, FLANK	DESIGN		JOHN DALE	(303)-837-3763
CO-0004	CO INTERSTATE GAS, KIT CARSON	DESIGN		JOHN DALE	(303)-837-3763
CO-0004	CO INTERSTATE GAS, KIT CARSON	DESIGN		JOHN DALE	(303)-837-3763
CO-0005	CO INTERSTATE GAS, TOTEM/LONG			JOHN DALE	(303)-837-3763
CO-0005	CO INTERSTATE GAS, TOTEM/LONG	DESIGN		JOHN DALE	(303)-837-3763
CO-0005	CO INTERSTATE GAS, TOTEM/LONG	DESIGN		JOHN DALE	(303)-837-3763

TABLE B-1. STATIONARY IC ENGINES (GAS-FIRED)

FACILITY ID	COMPANY NAME	FACILITY SIZE	PERMIT DATE	NOX PRIMARY PERMIT LIMIT	NOX SECONDARY PERMIT LIMIT
CO-0005	CO INTERSTATE GAS, TOTEM/LONG	16 MMBTU/H	09/12/80	2.52 LB/H	
CO-0006	CO INTERSTATE GAS, WATKINS	30000 HP	09/12/80	396.5 LB/H	
CO-0006	CO INTERSTATE GAS, WATKINS	1350 HP	09/12/80	17.84 LB/H	
CO-0006	CO INTERSTATE GAS, WATKINS	10800 HP	09/12/80	142.72 LB/H	
CO-0010	PANHANDLE EAST. PIPE LINE CO., FRED.	4500 HP	11/25/81	5.5 G/HP-H	
CO-0011	PANHANDLE EAST., FT. LUPTON	2246 BRAKE HP EA	05/29/80	55 LB/H EA	
CT-0001	ALGONQUIN GAS TRANSMISSION CO.	40 BHP	03/05/82	0.0135 % BY VOL	
IA-0020	NORTHERN NATURAL GAS	4000 HP	02/04/86	250 PPM, 15% O2	
IL-0043	NATURAL GAS PIPELINE CO.	4000 HP	03/01/89	9 G/BHP-H	79.4 LB/H
KS-0002	PANHANDLE EAST. PIPE LINE CO.	1669 HP	07/28/80	700 PPM 15% O2 (D)	
LA-0043	TRANSCONTINENTAL GAS PIPELINE CORP.	2250 HP	10/14/83	29.7 LB/H	
MI-0015	ANR STORAGE CO.	3750 HP	04/01/80	12 G/HP-H	
MI-0016	MICHIGAN WISCONSIN PIPE LINE CO.	4000 HP	11/01/80	12.3 G/HP-H	
ND-0009	WESTERN GAS PROCESSORS, LTD.	4000 BHP	09/11/84	2.2 LB/H PER ENGINE	
NM-0006	EL PASO NATURAL GAS CO., WASHINGTON RANCH	4500 HP	05/14/82	2.45 G/HP-H	
NM-0006	EL PASO NATURAL GAS CO., WASHINGTON RANCH	4500 HP	05/14/82	2.45 G/HP-H	
NM-0009	LLANO, INC.	1100 HP	06/22/82	2.2 G/HP-H	
NM-0009	LLANO, INC.	1100 HP	06/22/82	2.2 G/HP-H	
NM-0009	LLANO, INC.	1100 HP	06/22/82	2.2 G/HP-H	
NM-0009	LLANO, INC.	1100 HP	06/22/82	2.2 G/HP-H	
NM-0009	LLANO, INC.	1100 HP	06/22/82	2.2 G/HP-H	
NM-0010	TRANSWESTERN PIPELINE CO., RED BLUFF STA.	1596 HP	05/03/82	4 G/HP-H	
NM-0010	TRANSWESTERN PIPELINE CO., RED BLUFF STA	1073 HP	05/03/82	5 G/HP-H	
NM-0010	TRANSWESTERN PIPELINE CO., RED BLUFF STA.	1588 HP	05/03/82	4 G/HP-H	
NM-0010	TRANSWESTERN PIPELINE CO., RED BLUFF STA.	2647 HP	05/03/82	4 G/HP-H	

TABLE B-1. STATIONARY IC ENGINES (GAS-FIRED)

FACILITY ID	COMPANY NAME	NOX CONTROL	NOX CONTROL EFFICIENCY	STATE CONTACT NAME	PHONE NUMBER
CO-0005	CO INTERSTATE GAS, TOTEM/LONG			JOHN DALE	(303)-837-3763
CO-0006	CO INTERSTATE GAS, WATKINS	DESIGN		JOHN DALE	(303)-837-3763
CO-0006	CO INTERSTATE GAS, WATKINS	DESIGN		JOHN DALE	(303)-837-3763
CO-0006	CO INTERSTATE GAS, WATKINS	DESIGN		JOHN DALE	(303)-837-3763
CO-0010	PANHANDLE EAST. PIPE LINE CO., FRED.	ENGINE MODIFICATIONS	55	JOHN DALE	(303)-837-3763
CO-0011	PANHANDLE EAST., FT. LUPTON	ENG DESIGN & MODIFICATIONS		JOHN DALE	(303)-837-3763
CT-0001	ALGONQUIN GAS TRANSMISSION CO.	MANUFACTURER'S GUARANTEE		JOHN COURCIER	(617)-223-4448
IA-0020	NORTHERN NATURAL GAS	ENGINE DESIGN		JON KNODEL	(913)-551-7020
IL-0043	NATURAL GAS PIPELINE CO.	DESIGN & OPERATING PRACTICES		C. ROMAINE	(217)-782-2113
KS-0002	PANHANDLE EAST. PIPE LINE CO.	PRE-IGNITION CHAMBER		CHARLES WHITMORE	(913)-551-7020
LA-0043	TRANSCONTINENTAL GAS PIPELINE CORP.	CLEAN BURN ENGINE, MOD. COMB. W/CONT	55	HARENDRA RAOL	(504)-342-8940
MI-0015	ANR STORAGE CO.	RETARDED IGNITION		DAVID FERRIER	(517)-373-7023
MI-0016	MICHIGAN WISCONSIN PIPE LINE CO.	COMBUSTION MODIFICATIONS		GREGORY EDWARDS	(517)-373-7023
ND-0009	WESTERN GAS PROCESSORS, LTD.			GARY HELBLING	(701)-224-2348
NM-0006	EL PASO NATURAL GAS CO., WASHINGTON RANCH	COOPER ENERGY SERVICES		SHANKAR ANANTHAKRISHNA	(505)-768-2600
NM-0006	EL PASO NATURAL GAS CO., WASHINGTON RANCH	COOPER ENERGY SERVICES		SHANKAR ANANTHAKRISHNA	(505)-768-2600
NM-0009	LLANO, INC.	NEW DESIGN		SHANKAR ANANTHAKRISHNA	(505)-768-2600
NM-0009	LLANO, INC.	NEW DESIGN		SHANKAR ANANTHAKRISHNA	(505)-768-2600
NM-0009	LLANO, INC.	NEW DESIGN		SHANKAR ANANTHAKRISHNA	(505)-768-2600
NM-0009	LLANO, INC.	NEW DESIGN		SHANKAR ANANTHAKRISHNA	(505)-768-2600
NM-0009	LLANO, INC.	NEW DESIGN		SHANKAR ANANTHAKRISHNA	(505)-768-2600
NM-0010	TRANSWESTERN PIPELINE CO., RED BLUFF STA.	LOW NOX ENGINE		SHANKAR ANANTHAKRISHNA	(505)-768-2600
NM-0010	TRANSWESTERN PIPELINE CO., RED BLUFF STA	LOW NOX ENGINE		SHANKAR ANANTHAKRISHNA	(505)-768-2600
NM-0010	TRANSWESTERN PIPELINE CO., RED BLUFF STA.	LOW NOX ENGINE		SHANKAR ANANTHAKRISHNA	(505)-768-2600
NM-0010	TRANSWESTERN PIPELINE CO., RED BLUFF STA.	LOW NOX ENGINE		SHANKAR ANANTHAKRISHNA	(505)-768-2600

TABLE B-1. STATIONARY IC ENGINES (GAS-FIRED)

FACILITY ID	COMPANY NAME	FACILITY SIZE	PERMIT DATE	NOX PRIMARY PERMIT LIMIT	NOX SECONDARY PERMIT LIMIT
NM-0010	TRANSWESTERN PIPELINE CO., RED BLUFF STA.	2585 HP	05/03/82	5 G/HP-H	
NM-0011	TRANSWESTERN PIPELINE CO., MALJAMAR STA.	1073 HP	05/03/82	5 G/HP-H	
NM-0012	TRANSWESTERN PIPELINE CO., KEMNITZ STA.	1072 HP	05/03/82	5 G/HP-H	
NM-0013	TRANSWESTERN PIPELINE CO., BITTER LAKE CO.	1050 HP	05/03/82	5 G/HP-H	
NM-0013	TRANSWESTERN PIPELINE CO., BITTER LAKE CO.	1596 HP	09/23/82	4 G/HP-H	
NM-0014	TRANSWESTERN PIPELINE CO., ISLER NO. 1 STA.	1588 HP	05/08/82	4 G/HP-H	
PA-0028	TENNESSEE GAS PIPELINE CO.	15500 HP	03/01/83		
PA-0043	NATIONAL FUEL GAS SUPPLY CORP.	2850 HP	02/01/88	3 G/BHP-H	
PA-0048	CONSOLIDATED GAS TRANSMISSION CORP.	4200 HP	05/10/88	3 G/HP-H	
PA-0063	NATIONAL FUEL GAS SUPPLY CORP.	3000 HP	06/13/89	2 G/BHP-H	13.2 LB/H
TX-0101	GETTY OIL CO.	2000 HP	10/12/82	77.2 T/YR	
TX-0104	VALERO TRANSMISSION CO.	1000 HP EA	09/09/82	34.8 T/YR	
TX-0125	PHILLIPS PETROLEUM CO.	585 HP	12/15/82	62.1 T/YR	
TX-0125	PHILLIPS PETROLEUM CO.	220 HP	12/15/82	23.4 T/YR	
TX-0128	LIQUID ENERGY CORP.	2000 HP	11/10/82	4 G/HP-H	
TX-0128	LIQUID ENERGY CORP.	3200 HP	11/10/82	1.75 G/HP-H	
TX-0133	ENSERCH EXPLORATION CO.	780 HP	12/28/82	7.7 T/YR(1 G/HP-H)	
TX-0134	WESTAR TRANSMISSION CO.	1100 HP	12/07/82	21.2 T/YR(2 G/HP-H)	
VA-0107	ANR PRODUCTION CO.	600 HP	03/03/88	1.6 LB/H	7.2 T/YR
WV-0001	CONSOLIDATED GAS SUPPLY CORP.	1600 HP	09/14/81	7.33 G/SEC	

TABLE B-1. STATIONARY IC ENGINES (GAS-FIRED)

FACILITY ID	COMPANY NAME	NOX CONTROL	NOX CONTROL EFFICIENCY	STATE CONTACT NAME	PHONE NUMBER
NM-0010	TRANSWESTERN PIPELINE CO., RED BLUFF STA.	LOW NOX ENGINE		SHANKAR ANANTHAKRISHNA	(505)-768-2600
NM-0011	TRANSWESTERN PIPELINE CO., MALJAMAR STA.	LOW NOX ENGINE		SHANKAR ANANTHAKRISHNA	(505)-768-2600
NM-0012	TRANSWESTERN PIPELINE CO., KEMNITZ STA.	LOW NOX ENGINE		SHANKAR ANANTHAKRISHNA	(505)-768-2600
NM-0013	TRANSWESTERN PIPELINE CO., BITTER LAKE CO.	LOW NOX ENGINE		SHANKAR ANANTHAKRISHNA	(505)-768-2600
NM-0013	TRANSWESTERN PIPELINE CO., BITTER LAKE CO.	LOW NOX ENGINE		SHANKAR ANANTHAKRISHNA	(505)-768-2600
NM-0014	TRANSWESTERN PIPELINE CO., ISLER NO. 1 STA.	LOW NOX ENGINE		SHANKAR ANANTHAKRISHNA	(505)-768-2600
PA-0028	TENNESSEE GAS PIPELINE CO.	LEAN BURN PROC./AIR-FUEL RATIO ADJUST.		WILLIAM CHARLTON	(814)-724-8530
PA-0043	NATIONAL FUEL GAS SUPPLY CORP.	CLEAN BURN		BILL SCHILDT	(717)-787-9256
PA-0048	CONSOLIDATED GAS TRANSMISSION CORP.			BILL SCHILDT	(717)-787-9256
PA-0063	NATIONAL FUEL GAS SUPPLY CORP.	RICH PRE-IGNITION CHAMBER		RICHARD MAXWELL	(717)-327-3637
TX-0101	GETTY OIL CO.	COMBUSTION CHAMBER MOD.		RANDY HAMILTON	(512)-451-5711
TX-0104	VALERO TRANSMISSION CO.	(LEAN BURN)		RANDY HAMILTON	(512)-451-5711
TX-0125	PHILLIPS PETROLEUM CO.			RANDY HAMILTON	(512)-451-5711
TX-0125	PHILLIPS PETROLEUM CO.	EQUAL NOX-CO CARBURETOR SETTING		RANDY HAMILTON	(512)-451-5711
TX-0128	LIQUID ENERGY CORP.	TURBOCHARGERS		KAREN HORNE	(512)-451-5711
TX-0128	LIQUID ENERGY CORP.			KAREN HORNE	(512)-451-5711
TX-0133	ENSERCH EXPLORATION CO.		90	RANDY HAMILTON	(512)-451-5711
TX-0134	WESTAR TRANSMISSION CO.	COMBUSTION CHAMBER MODIFICATION		RANDY HAMILTON	(512)-451-5711
VA-0107	ANR PRODUCTION CO.		90	JAMES LEHAN	(804)-786-5783
WV-0001	CONSOLIDATED GAS SUPPLY CORP.			BOB BLASZCZAK	(215)-597-8186

TABLE B-2. STATIONARY IC ENGINES (EXCLUDING GAS-FIRED UNITS)

FACILITY ID	COMPANY NAME	FACILITY SIZE	FUEL	PERMIT DATE	NOX PRIMARY PERMIT LIMIT
AK-0019	GREENS CREEK MINING CO.	2300 KW	DIESEL	09/10/87	1075 PPMVD AT 15% O2
CA-0101	SANTA CRUZ COGENERATION ASSOC.	3656 BHP	DIESEL	07/23/84	3.7 G/HP-H
CA-0101	SANTA CRUZ COGENERATION ASSOC.	3656 BHP	DIESEL	07/23/84	715 LB/D
KERN	PACIFIC ENERGY RESOURCES, INC.	2650 HP	LANDFILL GAS	11/14/84	1.5 G/HP HR
CA-0103	PACIFIC LIGHTING ENERGY SYSTEMS	2000 BHP	LANDFILL GAS	01/28/85	1.5 G/HP-H
CA-0103	PACIFIC LIGHTING ENERGY	2650 HP	LANDFILL GAS	03/01/85	1.5 G/HP-H
CA-0171	SF SOUTHEAST TREATMENT PLANT	5.2 MW	SEWAGE-SLUDGE GAS	05/01/85	2 G/BHP-H
CA-0151	GENSTAR GAS RECOVERY SYSTEMS	1100 HP		08/29/85	1.5 G/HP-H
CA-0151	GENSTAR GAS RECOVERY SYSTEMS	2650 HP		08/29/85	1.5 G/HP-H
SAN DIEGO	CUMMINS POWER GEN/LAJET ENERGY CO.	1365 HP		07/17/86	5.4 GRAMS/BHP HR
CA-0286	LAJET ENERGY CO.	1365 HP		07/17/86	369 LB/D
CA-0191	TRICOUNTY SUN ENERGY SHERATON HOTEL	7750 BTU/HP-H		08/07/86	50 PPMVD AT 15% O2
CA-0175	POPPY RIDGE PARTNERS	0.54 MMCF/D	DIGESTER GAS	09/16/86	2 G/HP-H
CA-0209	GSF ENERGY, INC.	8775 BHP		11/13/86	245 LB/D
CA-0190	CITY OF VENTURA WASTEWATER TREATMENT PLANT	773 BHP	DIGESTER GAS	12/31/86	2 GR/BHP-H
SANTA BARBARA	EXXON CO. USA SANTA YNEZ UNIT EXPANSION		DIESEL	11/19/87	
FL-0025	SEBRING UTILITIES COMMISSION	19.53 MW EA	DIESEL	04/03/81	819 PPMV
FL-0041	PW VENTURES	8800 HP	DUAL	05/12/88	5 G/HP-H DUAL FUEL
FL-0040	KEY WEST ELECTRIC SYSTEM	13266 HP	DIESEL	06/05/89	6 G/HP-H
HI-0002	HAWAIIAN ELECTRIC	3950 BHP	OIL	05/08/84	1158 PPM AT 15% O2
HI-0002	HAWAII ELECTRIC LIGHT CO., INC.	2.5 MW	OIL	11/17/87	600 PPM, DRY AT 15% O2
HI-0002	HAWAII ELECTRIC LIGHT CO., INC.	2.5 MW	OIL	11/17/87	600 PPM, DRY AT 15% O2
HI-0003	MAUI ELECTRIC CO., INC	2.5 MW	OIL	11/17/87	600 PPM, DRY AT 15% O2
HI-0005	MAUI PINEAPPLE CO., LTD.	3020 BHP	DIESEL	05/17/88	520 PPM DRY AT 15% O2
HI-0005	MAUI PINEAPPLE CO., LTD.	2010 BHP	DIESEL	05/17/88	536 PPM DRY AT 15% O2

TABLE B-2. STATIONARY IC ENGINES (EXCLUDING GAS-FIRED UNITS)

FACILITY ID	COMPANY NAME	NOX SECONDARY PERMIT LIMIT	NOX CONTROL
AK-0019	GREENS CREEK MINING CO.		
CA-0101	SANTA CRUZ COGENERATION ASSOC.	29.8 LB/H	ENGINE DESIGN
CA-0101	SANTA CRUZ COGENERATION ASSOC.		ENGINE DESIGN
KERN	PACIFIC ENERGY RESOURCES, INC.		CLEAN BURNING OPERATION
CA-0103	PACIFIC LIGHTING ENERGY SYSTEMS	6.25 LB/H	ENGINE DESIGN, CLEAN BURN
CA-0103	PACIFIC LIGHTING ENERGY		PRECHAMBER IGNIT
CA-0171	SF SOUTHEAST TREATMENT PLANT		CLEAN BURN ENGINE
CA-0151	GENSTAR GAS RECOVERY SYSTEMS		LEAN-BURN COMBUSTION
CA-0151	GENSTAR GAS RECOVERY SYSTEMS		LEAN-BURN COMBUSTION
SAN DIEGO	CUMMINS POWER GEN/LAJET ENERGY CO.		ENGINE DESIGN/WATER INJECTION
CA-0286	LAJET ENERGY CO.	5.4 G/BHP-H	H2O INJ., ENGINE DESIGN
CA-0191	TRICOUNTY SUN ENERGY SHERATON HOTEL		NONSELECTIVE CATALYST
CA-0175	POPPY RIDGE PARTNERS		PRE-STRATIFIED CHARGE EMIS CONTROL SYS.
CA-0209	GSF ENERGY, INC.	0.8 G/BHP-H	CLEAN BURN ENGINE
CA-0190	CITY OF VENTURA WASTEWATER TREATMENT PLANT		ENGINE DESIGN
SANTA BARBARA	EXXON CO. USA SANTA YNEZ UNIT EXPANSION		INJ. TIMING RETARD
FL-0025	SEBRING UTILITIES COMMISSION		COMBUSTION CONTROL
FL-0041	PW VENTURES	12.1 G/HP-H DIESEL FIRING	
FL-0040	KEY WEST ELECTRIC SYSTEM		TIMING RETARDATION
HI-0002	HAWAIIAN ELECTRIC		INJ. TIMING RETARD 4 DEG
HI-0002	HAWAII ELECTRIC LIGHT CO., INC.	68.4 LB/H, 3H AVG	4 DEG IGNITION RETARD
HI-0002	HAWAII ELECTRIC LIGHT CO., INC.	68.4 LB/H, 3H AVG	4 DEG IGNITION RETARD
HI-0003	MAUI ELECTRIC CO., INC	68.4 LB/H 3H AVG	4 DEG IGNITION RETARD
HI-0005	MAUI PINEAPPLE CO., LTD.	35 LB/H, 3H AVG, 0.1% S MAX IN FUEL OIL	2 DEG IGNITION RETARD
HI-0005	MAUI PINEAPPLE CO., LTD.	23 LB/H, 3H AVG, 0.1% S MAX IN FUEL OIL	2 DEG IGNITION RETARD

TABLE B-2. STATIONARY IC ENGINES (EXCLUDING GAS-FIRED UNITS)

FACILITY ID	COMPANY NAME	NOX CONTROL EFFICIENCY	STATE CONTACT NAME	PHONE NUMBER
AK-0019	GREENS CREEK MINING CO.		JON SANDSTEDT	(907)-465-2666
CA-0101	SANTA CRUZ COGENERATION ASSOC.		B. NISHIMURA	(408)-443-1135
CA-0101	SANTA CRUZ COGENERATION ASSOC.		B. NISHIMURA	(408)-443-1135
KERN	PACIFIC ENERGY RESOURCES, INC.	60	TUAN NGO	(805)-861-3682
CA-0103	PACIFIC LIGHTING ENERGY SYSTEMS		FRED THOITS	(408)-443-1135
CA-0103	PACIFIC LIGHTING ENERGY		CRAIG ULLERY	(415)-771-6000
CA-0171	SF SOUTHEAST TREATMENT PLANT		STEVE HILL	(415)-771-6000
CA-0151	GENSTAR GAS RECOVERY SYSTEMS		CRAIG ULLERY	(415)-771-6000
CA-0151	GENSTAR GAS RECOVERY SYSTEMS		CRAIG ULLERY	(415)-771-6000
SAN DIEGO	CUMMINS POWER GEN/LAJET ENERGY CO.		CRAIG ANDERSON	(619)-694-3318
CA-0286	LAJET ENERGY CO.		CRAIG ANDERSON	(619)-694-3318
CA-0191	TRICOUNTY SUN ENERGY SHERATON HOTEL	90	KEITH DUVAL	(805)-654-2845
CA-0175	POPPY RIDGE PARTNERS		A. KENNARD	(916)-366-2107
CA-0209	GSF ENERGY, INC.		TED KOWALCZYK	(818)-572-6186
CA-0190	CITY OF VENTURA WASTEWATER TREATMENT PLANT		KEITH DUVAL	(805)-654-2845
SANTA BARBARA	EXXON CO. USA SANTA YNEZ UNIT EXPANSION		SANJIB MUKHERJI	(805)-964-8111
FL-0025	SEBRING UTILITIES COMMISSION		ED PALAGYI	(904)-488-1344
FL-0041	PW VENTURES		BARRY ANDREWS	(904)-488-1344
FL-0040	KEY WEST ELECTRIC SYSTEM		BARRY ANDREWS	(904)-488-1344
HI-0002	HAWAIIAN ELECTRIC	20	JIM HANSON	(415)-974-8218
HI-0002	HAWAII ELECTRIC LIGHT CO., INC.	20	NOLAN HIRAI	(808)-548-6410
HI-0002	HAWAII ELECTRIC LIGHT CO., INC.	20	NOLAN HIRAI	(808)-548-6410
HI-0003	MAUI ELECTRIC CO., INC	20	WILFRED NAGAMINE	(808)-543-8200
HI-0005	MAUI PINEAPPLE CO., LTD.	18	TYLER SUGIHARA	(808)-543-8200
HI-0005	MAUI PINEAPPLE CO., LTD.	18	TYLER SUGIHARA	(808)-543-8200

TABLE B-2. STATIONARY IC ENGINES (EXCLUDING GAS-FIRED UNITS)

FACILITY ID	COMPANY NAME	FACILITY SIZE	FUEL	PERMIT DATE	NOX PRIMARY PERMIT LIMIT
HI-0007	CITIZENS UTILITIES CO.	7.86 MW	DIESEL	09/19/89	590 PPM, DRY AT 15% O2,FULL LOAD
HI-0007	CITIZENS UTILITIES CO.	7.86 MW	DIESEL	09/19/89	667 PPM, DRY AT 15% O2,50-74.99% LOAD
HI-0008	MAUI ELECTRIC CO., LTD.	12.5 MW	OIL	12/30/89	595 PPM DRY AT 15% O2
KS-0004	CITY OF OTTAWA	6000 KW EA	DUAL FUEL	12/02/80	1150 PPM 15% O2 (D)
KS-0007	CITY OF AUGUSTA	6000 KW	DUAL FUEL	05/29/81	1150 PPM 15% O2 (D)
KS-0014	CITY OF BELOIT	6000 KW		05/26/82	1150 PPMV 15% O2, DRY BASIS
KS-0017	CITY OF KINGMAN	3495 HP	DUAL FUEL	03/01/83	1150 PPMV, 15% O2, DRY
MA-	PFIZER CHEMICAL COMPANY	3710 HP		07/13/87	40 T/YR
NJ-0002	TRENTON DISTRICT ENERGY CO.	6 MKW EA	DIESEL	07/08/80	1869 T/YR
NJ-0003	HOFFMANN-LAROCHE, INC.	23.3 MKW	DIESEL	08/17/81	2272 T/YR
OH-0157	COGENERATION PARTNERS OF AMERICA	9.62 MMBTU/H		04/06/88	0.68 LB/MMBTU
RI-0005	NORTHEAST LANDFILL POWER	2400 BHP	LANDFILL GAS	12/12/89	1.25 G/BHP-H
TX-0030	SHELL OIL CO.	1215 HP	FUEL GAS	03/27/81	10 G/HP-H
TX-0113	ORGANIC FUEL PRODUCTION, INC.	4.2 MMCF/YR	DIGESTER GAS	02/16/83	0.21 T/YR
TX-0189	3M	8386 BHP	DUAL FUEL	05/30/86	889 T/YR
UT-0036	LEHT COGENERATION ASSOCIATES	16950 KW	DUAL FUEL	10/22/87	249.87 T/YR

TABLE B-2. STATIONARY IC ENGINES (EXCLUDING GAS-FIRED UNITS)

FACILITY ID	COMPANY NAME	NOX SECONDARY PERMIT LIMIT	NOX CONTROL
HI-0007	CITIZENS UTILITIES CO.	605 PPM DRY AT 15% O2, 75-99.99% LOAD	
HI-0007	CITIZENS UTILITIES CO.	342.78 LB/H, 3H AVG	
HI-0008	MAUI ELECTRIC CO., LTD.	256.1 LB/H, 3H AVG	5 DEGREE IGNITION RETARD
KS-0004	CITY OF OTTAWA		
KS-0007	CITY OF AUGUSTA		
KS-0014	CITY OF BELOIT		
KS-0017	CITY OF KINGMAN		EFFICIENT OPERATION OF THE UNIT
MA-	PFIZER CHEMICAL COMPANY		SCR
NJ-0002	TRENTON DISTRICT ENERGY CO.		USE OF MANUFACT. ENG. MOD.
NJ-0003	HOFFMANN-LAROCHE, INC.		RETARD. FUEL INJ. TIMING
OH-0157	COGENERATION PARTNERS OF AMERICA	5.92 LB/H	CLEAN BURN TECHNOLOGY
RI-0005	NORTHEAST LANDFILL POWER		LEAN BURN
TX-0030	SHELL OIL CO.		DERATED OLD ENGINES
TX-0113	ORGANIC FUEL PRODUCTION, INC.		
TX-0189	3M		ENGINE REDESIGNED TO CONTROL NOX
UT-0036	LEHT COGENERATION ASSOCIATES		

TABLE B-2. STATIONARY IC ENGINES (EXCLUDING GAS-FIRED UNITS)

FACILITY ID	COMPANY NAME	NOX CONTROL EFFICIENCY	STATE CONTACT NAME	PHONE NUMBER
HI-0007	CITIZENS UTILITIES CO.	18.6	TYLER SUGIHARA	(808)-543-8200
HI-0007	CITIZENS UTILITIES CO.	18.6	TYLER SUGIHARA	(808)-543-8200
HI-0008	MAUI ELECTRIC CO., LTD.	20	WILFRED NAGAMINE	(808)-543-8200
KS-0004	CITY OF OTTAWA		CHARLES WHITMORE	(913)-551-7020
KS-0007	CITY OF AUGUSTA		CHARLES WHITMORE	(913)-551-7020
KS-0014	CITY OF BELOIT		CHARLES WHITMORE	(913)-551-7020
KS-0017	CITY OF KINGMAN		CHARLES WHITMORE	(913)-551-7020
MA-	PFIZER CHEMICAL COMPANY	90	JOHN MATTESON	(413)-784-1100
NJ-0002	TRENTON DISTRICT ENERGY CO.		LARRY KARAS	(212)-264-9538
NJ-0003	HOFFMANN-LAROCHE, INC.		LARRY KARAS	(212)-264-9538
OH-0157	COGENERATION PARTNERS OF AMERICA		DALE KRYGIELSKI	(419)-693-0350
RI-0005	NORTHEAST LANDFILL POWER		DOUG MCVAY	(401)-277-2808
TX-0030	SHELL OIL CO.		BILL TAYLOR	(214)-767-1594
TX-0113	ORGANIC FUEL PRODUCTION, INC.		GARY WALLIN	(512)-451-5711
TX-0189	3M		RANDY HAMILTON	(512)-451-5711
UT-0036	LEHT COGENERATION ASSOCIATES		DAVE KOPTA	(801)-538-6108

APPENDIX C

NO_X CONTROL DATA

NON-UTILITY BOILERS AND HEATERS

Description of Terms Used in the Following Table(s)

Facility ID:	Identifier used in the BACT/LAER Clearinghouse or region/county where facility is located
Permit Date:	Permit or start-up date (unit may be canceled after permit approval)
NO_x Primary Limit:	NO_x permit limit
NO_x Secondary Limit:	NO_x permit limit expressed in different units or for back-up fuel
NO_x Control Efficiency:	NO_x control efficiency as stated in the permit
Contact Name:	State agency contact
A/F:	Air to fuel ratio
FGR:	Flue gas recirculation
LNB:	Low NO_x burner
LNC:	Low NO_x combustion
NSCR:	Non-selective catalytic reduction
SCR:	Selective catalytic reduction
SNCR:	Selective non-catalytic reduction

TABLE C-1. COAL-FIRED BOILERS

FACILITY ID	COMPANY NAME	FACILITY SIZE	DATE ISSUED	NOX PRIMARY PERMIT LIMIT	NOX SECONDARY PERMIT LIMIT
REGION IX	RIO BRAVO/POSO CREEK, KERN			78 PPMV AT 3% O2	
AMADOR	AMERICAN LIGNITE COGENERATION	240 MMBTU/HR	12/21/83	61.4 LBM/HR	247.97 TON/YR
REGION IX	CORN PRODUCTS/STOCKTON	50 MMBTU/HR	12/85	50 PPM	
REGION IX	COGENERATION NATIONAL CORPORATION	300 MMBTU/HR	12/85	30 PPMV AT 3% O2	
CA-0092	RIO BRAVO REFINING CO.	37.5 MW	02/28/85	0.2 LB/MMBTU	
CA-0120	SCE - BIOGEN POWER PROJECT	212 MMBTU/HR	04/26/85	34 PPM DRY	9.2 LB/H
CA-0128	CORN PRODUCTS	620 MMBTU/HR	10/29/85	30 PPMV AT 3% O2	
CA-0372	COGENERATION NATIONAL CORP.	620 MMBTU/HR	12/13/85	30 PPM AT 3% O2	
SAN JOAQUIN	COGENERATION NATIONAL CORPORATION	279.6 MMBTU/HR	12/13/85	30 PPMV AT 3% O2	
CA-0129	COGENERATION NATIONAL CORP.	279.6 MMBTU/HR	12/13/85	30 PPMV AT 3% O2	12 LB/H/UNIT
CA-0372	COGENERATION NATIONAL CORP.	280 MMBTU/HR	12/13/85	30 PPM AT 3% O2	
CA-0128	CORN PRODUCTS	49.9 MW	12/16/85	42 LB/H	50 PPM
CA-0129	COGENERATION NATIONAL CORP.	300 MMBTU/HR	12/31/85	30 PPMDV AT 3% O2	
CA-0158	BMCP	220 T/D	06/20/86	0.039 LB/MMBTU	
CA-0092	RIO BRAVO REFINING CO.	389 MMBTU/HR	10/22/86	78 PPM AT 3% O2	38.9 LB/H
CA-0165	PYROPOWER CORP.	640 MMBTU/HR	12/01/86	0.092 LB/MMBTU	58.6 LB/H
KERN	PYROPOWER CORPORATION	640 MMBTU/HR	12/01/86	0.092 LBM NOX/MMBTU	58.6 LBM NOX/HR
REGION IX	MT. POSO COGEN COMPANY/KERN	50 MW	1/87	65 PPMV AT 3% O2	
CA-0178	MOUNT POSO COGENERATION CO.	50 MW	01/12/87	0.1 LB/MMBTU	
CA-0180	GWF POWER SYSTEMS CO.	274 MMBTU/HR	01/28/87	28 PPM AT 3% O2	
REGION IX	KERR MCGEE/TRONA, CA	710,000 LMB/HR	1988	0.09 LB/MMBTU	
CA-0282	GWF POWER SYSTEMS CO., INC.	202 MMBTU/HR	02/11/88	360 LB/D	0.074 LB/MMBTU
CA-0129	COGENERATION NATIONAL CORP.	79 MMBTU/HR	02/25/88	199 LB/D, NAT GAS	140 LB/D, #2 OIL
CA-0128	CPC INTERNATIONAL	178 MMBTU/HR	03/02/88	684 LB/D, NAT GAS	512 LB/D, #2 OIL
REGION IX	GWF POWER SYSTEMS/TORRANCE, KERN		1989	22 PPMV AT 3% O2	

TABLE C-1. COAL-FIRED BOILERS

FACILITY ID	COMPANY NAME	NOX CONTROL	NOX CONTROL EFFICIENCY	STATE CONTACT NAME	PHONE NUMBER
REGION IX	RIO BRAVO/POSO CREEK, KERN				
AMADOR	AMERICAN LIGNITE COGENERATION	LOW BED TEMP & STAGED COMB		EARL WITHYCOMBE	(916)-862-1233
REGION IX	CORN PRODUCTS/STOCKTON				
REGION IX	COGENERATION NATIONAL CORPORATION		90		
CA-0092	RIO BRAVO REFINING CO.	CIRCULATING BED COMBUSTION		TOM PAXSON	(805)-861-3682
CA-0120	SCE - BIOGEN POWER PROJECT	SELECTIVE NON-CATALYTIC REDUCTION, NH3 INJ.	80	LINH TRAN	(415)-974-7631
CA-0128	CORN PRODUCTS	STAGED COMBUSTION, NSCR		SEYED SADREDIN	(209)-462-8526
CA-0372	COGENERATION NATIONAL CORP.	SCNR		SEYED SADREDIN	(209)-682-8526
SAN JOAQUIN	COGENERATION NATIONAL CORPORATION	SNCR & AMMONIA INJ		SEYED SADREDIN	(209)-462-8526
CA-0129	COGENERATION NATIONAL CORP.	NSCR		SEYED SADREDIN	(209)-462-8526
CA-0372	COGENERATION NATIONAL CORP.	SCNR		SEYED SADREDIN	(209)-682-8526
CA-0128	CORN PRODUCTS	STAGED COMBUSTION & AMMONIA INJ.	60	LINH TRAN	(415)-974-7631
CA-0129	COGENERATION NATIONAL CORP.	SNCR	80	JIM HANSON	(415)-974-8218
CA-0158	BMCP	LOW TEMP., STAGED COMBUSTION, AMMONIA INJ.	80	TOM PAXSON	(805)-861-3682
CA-0092	RIO BRAVO REFINING CO.	NH3 INJ. AT NH3/NOX RATIO = 6.1 TO 1, BY WT.	50	JIM HANSON	(415)-974-8218
CA-0165	PYROPOWER CORP.	AMMONIA INJ./STAGED COMBUSTION/SEE NOTES	53	TOM PAXSON	(305)-361-3682
KERN	PYROPOWER CORPORATION	STAGED & LOW TEMP COMB., NH3 INJ.	53	THOMAS PAXSON	(805)-861-3682
REGION IX	MT. POSO COGEN COMPANY/KERN				
CA-0178	MOUNT POSO COGENERATION CO.	FLUID BED COMBUST, PRIMARY/SEC. AIR, AMMONIA INJ.	50	MATT HABER	(415)-974-8209
CA-0180	GWF POWER SYSTEMS CO.	STAGED COMBUSTION, AMMONIA INJ.		LINH TRAN	(415)-974-7631
REGION IX	KERR MCGEE/TRONA, CA		96		
CA-0282	GWF POWER SYSTEMS CO., INC.	AMMONIA INJECTION SYSTEM		S. LOPEZ	(415)-771-6000
CA-0129	COGENERATION NATIONAL CORP.	FLUE GAS RECIRCULATION, LOW NOX BURNER	51	SEYED SADREDIN	(209)-468-3474
CA-0128	CPC INTERNATIONAL	STAGED COMBUSTION, LOW NOX BURNER	56	SEYED SADREDIN	(209)-468-3474
REGION IX	GWF POWER SYSTEMS/TORRANCE, KERN				

TABLE C-1. COAL-FIRED BOILERS

FACILITY ID	COMPANY NAME	FACILITY SIZE	DATE ISSUED	NOX PRIMARY PERMIT LIMIT	NOX SECONDARY PERMIT LIMIT
CT-0067	A E S THAMES, INC.	923 MMBTU/HR	08/09/89	0.36 LB/MMBTU	
CT-0056	A E S THAMES, INC.	923 MMBTU/HR	08/09/89	0.36 LB/MMBTU	
HI-0009	APPLIED ENERGY SERVICES - BARBERS POINT I	2150 MMBTU/HR	01/25/90	236.5 LB/H	25 PPM
KY-0007	TENNESSEE VALLEY AUTHORITY	200 MMBTU/HR	12/13/85	0.56 LB/MMBTU	
KY-0007	TENNESSEE VALLEY AUTHORITY	1430 MMBTU/HR	04/15/86	0.6 LB/MMBTU	
KY-0007	TENNESSEE VALLEY AUTHORITY	1579 MMBTU/HR	05/04/88	0.6 LB/MMBTU	
MI-0048	COGENTRIX MICHIGAN LEASING CORP.	214 MMBTU/HR	07/31/87	0.6 LB/MMBTU	
MI-0051	CITY OF WYANDOTTE, DEPT. OF MUN. SERV	369 MMBTU/HR	12/07/87	0.4 LB/MMBTU	
NC-0037	COGENTRIX CAROLINA LEASING CORP.	202 MMBTU/HR	05/28/86	0.6 LB/MMBTU	
NC-0039	COGENTRIX CAROLINA LEASING CORP.	202 MMBTU/HR	07/07/86	0.6 LB/MMBTU	
NC-0050	COGENTRIX OF ROCKY MOUNT	375 MMBTU/HR	07/20/89	0.6 LB/MMBTU	
NV-0010	WHITE PINE POWER PROJECT	750 MW	08/06/85	0.55 LB/MMBTU, BIT. COAL	0.45 LB/MMBTU, SUB. COAL
NY-0016	NORTHERN ENERGY GROUP	250 MMBTU/HR	12/11/85	0.17 LB/MMBTU	
NY-0014	FORT DRUM HEATING PLANT	190 MMBTU/HR	04/01/87	0.6 LB/MMBTU	
NY-0030	UNITED DEVELOPMENT GROUP - NIAGARA INC.	577 MMBTU/HR	09/25/88	0.5 LB/MMBTU	
OH-0069	CENTRAL STATE UNIVERSITY	66 MMBTU	07/01/85	0.6 LB/MMBTU	
OH-0145	WM. H. ZIMMER GENERATING STATION	11968 MMBTU/HR	02/05/87	0.6 LB/MMBTU	
PA-0047	SIGNAL FRACKVILLE ENERGY		12/02/85	0.6 LB/MMBTU	
PA-0046	WESTWOOD ENERGY PROPERITES	425 MMBTU/HR	01/06/86	0.6 LB/MMBTU	
PA-0044	NORTHEASTERN POWER CO.	540 MMBTU/HR	06/27/86	0.6 LB/MMBTU	
PA-0035	J. PAGNOTTI ENTERPRISES	1082 MMBTU/HR	11/01/86	0.4 LB/MMBTU	
PA-0034	SHERIDAN COAL CO.	550 MMBTU/HR	12/01/86	0.6 LB/MMBTU	
PA-0036	FOSTER WHEELER POWER	283 MMBTU/HR	12/29/86	0.6 LB/MMBTU	
PA-0045	ARCHBALD POWER CORP.	240 MMBTU/HR	01/16/87	0.25 LB/MMBTU	
PA-0042	PANTHER CREEK ENERGY	1170 MMBTU/HR	02/17/88	0.42 LB/MMBTU	

TABLE C-1. COAL-FIRED BOILERS

FACILITY ID	COMPANY NAME	NOX CONTROL	NOX CONTROL EFFICIENCY	STATE CONTACT NAME	PHONE NUMBER
CT-0067	A E S THAMES, INC.			SUSAN AMARELLO	(203)-566-8230
CT-0056	A E S THAMES, INC.			SUSAN AMARELLO	(203)-566-8230
HI-0009	APPLIED ENERGY SERVICES - BARBERS POINT I	SNCR	62	NOLAN HIRAI	(808)-543-8200
KY-0007	TENNESSEE VALLEY AUTHORITY			JAMES DILLS	(502)-564-3382
KY-0007	TENNESSEE VALLEY AUTHORITY			JAMES DILLS	(502)-564-3382
KY-0007	TENNESSEE VALLEY AUTHORITY			JAMES DILLS	(502)-564-3382
MI-0048	COGENTRIX MICHIGAN LEASING CORP.	DESIGN & OPERATING PRACTICES		DHRUMAN SHAH	(517)-373-7023
MI-0051	CITY OF WYANDOTTE, DEPT. OF MUN. SERV	EQUIP. DESIGN		PHILIP KURIKESU	(313)-567-0710
NC-0037	COGENTRIX CAROLINA LEASING CORP.	CONTROL OF EXCESS AIR		MIKE SEWELL	(919)-733-3340
NC-0039	COGENTRIX CAROLINA LEASING CORP.	CONTROL OF EXCESS AIR		MIKE SEWELL	(919)-733-3340
NC-0050	COGENTRIX OF ROCKY MOUNT	CONTROL OF EXCESS AIR		SAMMY AMERSON	(919)-733-3340
NV-0010	WHITE PINE POWER PROJECT	PROPER BOILER DESIGN & COMBUSTION TECHNIQUES		GLEN GENTRY	(702)-885-4670
NY-0016	NORTHERN ENERGY GROUP	COMBUSTION CONTROL		JAMES HARRINGTON	(518)-457-2044
NY-0014	FORT DRUM HEATING PLANT	COMBUSTION CONTROL		JAMES HARRINGTON	(518)-457-2044
NY-0030	UNITED DEVELOPMENT GROUP - NIAGARA INC.	COMBUSTION CONTROL	65	JAMES HARRINGTON	(518)-457-2044
OH-0069	CENTRAL STATE UNIVERSITY			TIM WILSON	(513)-225-4435
OH-0145	WM. H. ZIMMER GENERATING STATION	LOW NOX BURNER	35	THOMAS TUCKER	(513)-251-8777
PA-0047	SIGNAL FRACKVILLE ENERGY			BILL SCHILDT	(717)-787-9256
PA-0046	WESTWOOD ENERGY PROPERITES			BILL SCHILDT	(717)-787-9256
PA-0044	NORTHEASTERN POWER CO.			BILL SCHILDT	(717)-787-9256
PA-0035	J. PAGNOTTI ENTERPRISES			BILL SCHILDT	(717)-787-4324
PA-0034	SHERIDAN COAL CO.			BILL SCHILDT	(717)-787-4324
PA-0036	FOSTER WHEELER POWER			BILL SCHILDT	(717)-787-4324
PA-0045	ARCHBALD POWER CORP.			BILL SCHILDT	(717)-787-9256
PA-0042	PANTHER CREEK ENERGY			BILL SCHILDT	(717)-787-9256

TABLE C-1. COAL-FIRED BOILERS

FACILITY ID	COMPANY NAME	FACILITY SIZE	DATE ISSUED	NOX PRIMARY PERMIT LIMIT	NOX SECONDARY PERMIT LIMIT
PA-0049	EDENSBURG POWER CO.	617 MMBTU/HR	06/06/88	0.6 LB/MMBTU	
PA-0044	NORTHEASTERN POWER CO.	513 MMBTU/HR	06/17/88	0.6 LB/MMBTU	
PA-0058	NORTH BRANCH ENERGY PARTNERS LP	563 MMBTU/HR	09/26/88	0.6 LB/MMBTU	
PA-0057	SCRUBGRASS POWER CORP.	599 MMBTU/HR	01/18/89	0.3 LB/MMBTU	
PA-0062	CAMBRIA COGEN, INC.	559 MMBTU/HR	05/26/89	335.5 LB/H	
UT-0034	UTAH POWER & LIGHT CO.	400 MW	10/01/86	0.49 LB/MMBTU	
VA-0033	UNION CAMP	245 MMBTU/HR	07/01/85	643.86 T/YR	
VA-0034	COGENTRIX OF VIRGINIA, INC.	200 MMBTU/HR	06/12/86	0.6 LB/MMBTU	120 LB/H
VA-0044	TULTEX CORP.	12 MMBTU/HR	12/18/86	0.35 LB/MMBTU	4.22 LB/H EA
VA-0044	TULTEX CORP.	93.3 MMBTU/HR	12/18/86	0.14 LB/MMBTU	13.33 LB/H
VA-0044	TULTEX CORP.	3 MMBTU/HR	12/18/86	3.6 LB/H	5.77 T/YR
WI-0041	FORT HOWARD CORP.	505 MMBTU/HR	09/21/88	0.49 LB/MMBTU	

TABLE C-1. COAL-FIRED BOILERS

FACILITY ID	COMPANY NAME	NOX CONTROL	NOX CONTROL EFFICIENCY	STATE CONTACT NAME	PHONE NUMBER
PA-0049	EDENSBURG POWER CO.			BRUCE FRY	(412)-645-7100
PA-0044	NORTHEASTERN POWER CO.			MIKE SAFKO	(717)-826-2531
PA-0058	NORTH BRANCH ENERGY PARTNERS LP			BRUCE FRY	(412)-645-7129
PA-0057	SCRUBGRASS POWER CORP.	COMBUSTION CONTROL		WILLIAM CHARLTON	(814)-724-8530
PA-0062	CAMBRIA COGEN, INC.	COMBUSTION CONTROL		BRUCE FRY	(412)-645-7100
UT-0034	UTAH POWER & LIGHT CO.	LOW NOX BURN	35	L. MENLOVE	(801)-538-6108
VA-0033	UNION CAMP	ENGINEERING DESIGN		KATHERINE MILLER	(804)-786-1433
VA-0034	COGENTRIX OF VIRGINIA, INC.			KATHERINE MILLER	(804)-786-1433
VA-0044	TULTEX CORP.			KATHERINE MILLER	(804)-786-1433
VA-0044	TULTEX CORP.			KATHERINE MILLER	(804)-786-1433
VA-0044	TULTEX CORP.			KATHERINE MILLER	(804)-786-1433
WI-0041	FORT HOWARD CORP.	PROPER BED OPERATION		ALLEN HUBBARD	(608)-266-3450

TABLE C-2. GAS-FIRED BOILERS

FACILITY ID	COMPANY NAME	FACILITY SIZE	PERMIT DAT	NOX PRIMARY PERMIT LIMIT	NOX SECONDARY PERMIT LIMIT
AR-0002	ARKANSAS EASTMAN CO.	78 MMBTU/H	7/14/1987	13.3 LB/H	
AL-0036	GENERAL ELECTRIC	99.48 MMBTU/H	10/14/1988	9.9 LB/H	0.1 LB/MMBTU
AL-0036	GENERAL ELECTRIC	99.48 MMBTU/H	10/14/1988	14.9 LB/H	0.15 LB/MMBTU
AL-0036	GENERAL ELECTRIC	246.9 MMBTU/H	10/14/1988	0.15 LB/MMBTU	37 LB/H
KERN	SNACK FOODS PLANT	72 MMBTU/H	11/11/83	75 PPMVD AT 3% O2	
CA-0066	APPLIED POWER TECHNOLOGY	307.1 MMBTU/H	11/29/83	35.4 LB/H	
VENTURA	ROCKWELL INTERNATIONAL	2 MMBTU/H	03/22/85	0.18 T/YR	
KERN	PETRO-LEWIS CORPORATION	62.5 MMBTU/H	10/29/85	0.03 LMB/MMBTU	
SACRAMENTO	FOLSOM PRISON	48 MMBTU/H	06/12/86	40 PPMVD AT 3% O2	
SACRAMENTO	US GOVERNMENT McCLELLAN	62 MMBTU/H	10/29/86	40 PPMVD AT 3% O2	
CA-0193	NAVAL STATION TREASURE ISLAND	24 MMBTU/H	12/19/86	40 PPMVD AT 3% O2	0.05 LB/MMBTU
KINGS	CA DEPT. OF CORRECTIONS/CORCORAN	43.9 MMBTU/H	02/08/87	40 PPMVD AT 3% O2	250 LBM/DAY
CA-0231	DOUGLAS AIRCRAFT CO.	33.5 MMBTU/H	04/23/87	68 LB/D TOTAL	35 PPMVD AT 3% O2
VENTURA	VENTURA COASTAL CORPORATION	31.4 MMBTU/H	08/31/87	30 PPMVD AT 3% O2	3% EXCESS O2 & 20% FGR
CA-0234	VENTURA COASTAL CORP.	31.4 MMBTU/H	08/31/87	25.7 LB/D	30 PPMVD AT 3% O2
MBUAPCD	BAF ENERGY AMERICAN I COGENERATION	150 MMBTU/H	10/26/87	40 PPMVD AT 3% O2	69 PPMVD AT 3% O2
SAN JOAQUIN	COGENERATION NATIONAL CORPORATION	79.4 MMBTU/H	02/25/88	199 LBM/DAY	0.106 LBM/MMBTU
SAN JOAQUIN	CORN PRODUCTS, A DIV. OF CPC INTNL.	178 MMBTU/H	03/02/88	684 LBM/DAY	0.16 LBM/MMBTU
SACRAMENTO	SMUD/CAMPBELL SOUP COMPANY	100 MMBTU/H	08/09/88	40 PPMVD AT 3% O2	
CA-0292	WESTINGHOUSE ELECTRIC CORP.	380 MMBTU/H	08/17/88	140 LB/D	0.015 LB/MMBTU
CA-0281	VENTURA COASTAL CORP.	27.2 MMBTU/H	11/17/88	0.89 LB/H	22 PPMV AT 3% O2
MONTEREY BAY	MOBIL EXPLORATION & PRODUCING, INC.	62.5 MMBTU/H	04/14/89	40 PPMVD AT 3% O2	
LA-0047	TRUNKLINE LNG	72.5 MMBTU/H	05/27/1987	7.25 LB/H	0.1 LB/MMBTU
MI-0109	DOW CHEMICAL CO.	40.35 MMBTU/H	02/21/1989	0.07 LB/MMBTU	
OH-0107	KAISER ALUMINUM & CHEMICAL CORP.	16.8 MMBTU/H	09/24/1986	0.1 LB/MMBTU	

TABLE C-2. GAS-FIRED BOILERS

FACILITY ID	COMPANY NAME	NOX CONTROL	NOX CONTROL EFFICIENCY	STATE CONTACT NAME	PHONE NUMBER
AR-0002	ARKANSAS EASTMAN CO.			SUSAN LOHR	(501)-562-7444
AL-0036	GENERAL ELECTRIC	LOW NOX BURNERS	50	KENNETH BARRETT	(205)-271-7861
AL-0036	GENERAL ELECTRIC	LOW NOX BURNERS	50	KENNETH BARRETT	(205)-271-7861
AL-0036	GENERAL ELECTRIC	LOW NOX BURNERS	50	KENNETH BARRETT	(205)-271-7861
KERN	SNACK FOODS PLANT	LNB & SULFUR FUEL OIL		THOMAS PAXSON	(805)-861-3682
CA-0066	APPLIED POWER TECHNOLOGY	LNC		JOE SLAMOVICH	(415)-974-8235
VENTURA	ROCKWELL INTERNATIONAL	LNB		STAN COWEN	(805)-654-2458
KERN	PETRO-LEWIS CORPORATION	SCR & REDUCED FIRING RATE	70	TOM PAXSON	(805)-861-3682
SACRAMENTO	FOLSOM PRISON	FGR		A. KENNARD	(916)-366-2107
SACRAMENTO	US GOVERNMENT McCLELLAN	FGR & LNB		A. KENNARD	(916)-366-2107
CA-0193	NAVAL STATION TREASURE ISLAND	LOW NOX BURNERS/FGR		BOB MISHINURA	(415)-771-6000
KINGS	CA DEPT. OF CORRECTIONS/CORCORAN	FGR		MARK POINDEXTER	(209)-584-1411
CA-0231	DOUGLAS AIRCRAFT CO.	FLUE GAS RECIR. & OXYGEN TRIM		TRAN VO	(818)-572-6126
VENTURA	VENTURA COASTAL CORPORATION	O2 TRIM & FGR		TERRI THOMAS	(805)-654-2844
CA-0234	VENTURA COASTAL CORP.	FGR/OXYGEN TRIM		TERRI THOMAS	(805)-654-2849
MBUAPCD	BAF ENERGY AMERICAN I COGENERATION	LNB & FGR		FRED THOITS	(408)-443-1135
SAN JOAQUIN	COGENERATION NATIONAL CORPORATION	LNB & FGR	51	SEYED SADREDIN	(209)-468-3676
SAN JOAQUIN	CORN PRODUCTS, A DIV. OF CPC INTNL.	LNB	56	SEYED SADREDIN	(209)-468-3676
SACRAMENTO	SMUD/CAMPBELL SOUP COMPANY	FGR & LNB		BRUCE NIXON	(916)-386-6623
CA-0292	WESTINGHOUSE ELECTRIC CORP.	LOW NOX BURNERS SCR/FGR		HARI DOSS	(415)-771-6000
CA-0281	VENTURA COASTAL CORP.			T. THOMAS	(805)-654-2844
MONTEREY BAY	MOBIL EXPLORATION & PRODUCING, INC.	FGR		FRED THOITS	(408)-443-1135
LA-0047	TRUNKLINE LNG	LOW NOX BURNERS SCR/FGR		KAREN PESSON	(504)-342-1206
MI-0109	DOW CHEMICAL CO.	FLUE GAS RECIRC./LOW EXCESS AIR	50	RANDAL TELESZ	(517)-373-7023
OH-0107	KAISER ALUMINUM & CHEMICAL CORP.	FGR/STAGED COMB.		DALE KRYGIELSKI	(419)-666-4248

TABLE C-3. OIL-FIRED BOILERS

FACILITY ID	COMPANY NAME	FACILITY SIZE	PERMIT DATE	NOX PRIMARY PERMIT LIMIT	NOX SECONDARY PERMIT LIMIT	NOX CONTROL
KERN	HOPCO	62.5 MMBTU/HR	12/04/84	1.7 LBM/DAY		WET SCRUBBER
CA-0113	BERRY HOLDING CO.	62.5 MMBTU/HR	10/02/85	7.5 LB/HR		FLUE GAS RECIRCULATION
CA-0113	BERRY HOLDING CO.	31.5 MMBTU/HR	10/02/85	0.2 LB/MMBT	6.26 LB/H	LOW NOX BURNER; FLUE GAS RECIRCULATION
CA-0113	BERRY HOLDING CO.	31.5 MMBTU/HR	10/02/85	0.2 LB/MMBT	6.26 LB/H	LOW NOX BURNER; FLUE GAS RECIRCULATION
CA-0113	BERRY HOLDING CO.	62.5 MMBTU/HR	10/02/85	7.5 LB/HR		FLUE GAS RECIRCULATION
KERN	PETRO-LEWIS CORPORATION	62.5 MMBTU/HR	10/26/85	0.12 LMB/MMBTU		SCR & REDUCED FIRE RATE
KERN	ANGUS PETROTECH	50 MMBTU/HR	11/29/85	199 LB/DAY		LNB, FGR, SCR
KERN	DELANO GROWERS GRAPE PRODUCTS	32 MMBTU/HR	03/17/89	10.6 LBM/HR	254.4 LBM/DAY	LNB, FGR, & O2 TRIM
OH-0117	OWENS-ILLINOIS INC.	10.3 MMBTU/HR	11/26/86	0.145 LB/MMBTU		
WI-0037	WISCONSIN TISSUE MILLS, INC.	146.4 MMBTU/HR	10/10/88	0.38 LB/MMBTU		LOW EXCESS AIR

TABLE C-3. OIL-FIRED BOILERS

FACILITY ID	COMPANY NAME	NOX CONTROL EFFICIENCY	CONTACT NAME	PHONE NUMBER
KERN	HOPCO	70	THOMAS PAXSON	(805)861-3682
CA-0113	BERRY HOLDING CO.	70	TOM PAXSON	(805)-861-3682
CA-0113	BERRY HOLDING CO.	61.8	TOM PAXSON	(805)-861-3682
CA-0113	BERRY HOLDING CO.	61.8	TOM PAXSON	(805)-861-3682
CA-0113	BERRY HOLDING CO.	70	TOM PAXSON	(805)-861-3682
KERN	PETRO-LEWIS CORPORATION	71	THOMAS PAXSON	(805)861-3682
KERN	ANGUS PETROTECH	51	THOMAS PAXSON	(805)861-3682
KERN	DELANO GROWERS GRAPE PRODUCTS		THOMAS PAXSON	(805)861-3682
OH-0117	OWENS-ILLINOIS INC.		DALE KRYGIELSKI	(419)-693-0350
WI-0037	WISCONSIN TISSUE MILLS, INC.		DANIEL JOHNSTON	(608)-267-9500

TABLE C-4. WOOD/WASTE BOILERS

DISTRICT	COMPANY NAME	FACILITY SIZE	PERMIT DATE	NOX PRIMARY PERMIT LIMIT	NOX SECONDARY PERMIT LIMIT	NOX CONTROL	NOX CONTROL EFFICIENCY	STATE CONTACT NAME	PHONE NUMBER
REGION IX	PROCTOR & GAMBLE/LONG BEACH			.265 LB/MMBTU		SNCR	40		
REGION IX	ULTRAPOWER/CHINESE STATION			.147 LB/MMBTU		SNCR			
REGION IX	DINUBA ENERGY/TANKE ENERGY	198 MMBTU/HR	3/87	.12 LB/MMBTU		SNCR	68		
REGION IX	SIERRA FOREST PRODUCTS			.108 LB/MMBTU		SNCR			
REGION IX	ABS ENERGY			.061 LB/MMBTU		SNCR			
REGION IX	CHOWCHILLA BIOMASS			.25 LB/MMBTU		SNCR	50		
REGION IX	MENDOTA BIOMASS POWER, LTD			.072 LB/MMBTU		SNCR	55		
REGION IX	HONEY LAKE POWER			.10 LB/MMBTU		SNCR			
REGION IX	COLMAC ENERGY INCORPORATED			.10 LB/MMBTU		SNCR			
REGION IX	NORTH FORK/YANKE ENERGY			.147 LB/MMBTU		SNCR			
REGION IX	THERMAL ENERGY DEVT. CO.	20.5 MW	1989	.105 LB/MMBTU		SNCR	75		
REGION IX	INDUSTRIAL POWER TECH.			.063 LB/MMBTU		SNCR	70		
REGION IX	WOODLAND BIOMASS POWER, LTD			.08 LB/MMBTU		SNCR			
REGION IX	FIVE POINTS BIOMASS POWER PLANT			.25 LB/MMBTU		SNCR			
REGION IX	SANGER BIO MASS ENERGY COMPANY			.08 LB/MMBTU		SNCR			
REGION IX	WHEELABRATOR SIGNAL ENERGY			.12 LB/MMBTU		SNCR	40		
REGION IX	BURNEY FOREST PRODUCTS			.12 LB/MMBTU		SNCR	40		
REGION IX	SIERRA PACIFIC INDUSTRIES			.110 LB/MMBTU		SNCR	50		

TABLE C-5. REFINERY HEATERS

FACILITY ID	COMPANY NAME	FACILITY SIZE	PERMIT DATE	NOX PRIMARY PERMIT LIMIT	NOX SECONDARY PERMIT LIMIT
CA-0057	EXXON CO., USA	165 MMBTU/H	12/10/80	40 PPM AT 3% O2	207 LB/D
CA-0046	TOSCO CORP.	40 MMBTU/H	02/19/82	40 PPM AT 3% O2	
CA-0046	TOSCO CORP.	119 MMBTU/H	02/19/82	40 PPM AT 3% O2	
CA-0045	CHEVRON USA, INC.	22 MMBTU/H	04/08/82	40 PPM NO2 AT 3% O2	
CA-0045	CHEVRON USA, INC.	26 MMBTU/H	04/08/82	40 PPM NO2 AT 3% O2	
CA-0045	CHEVRON USA, INC.	12.5 MMBTU/H	04/08/82	40 PPM NO2 AT 3% O2	
CA-0045	CHEVRON USA, INC.	15 MMBTU/H	04/08/82	40 PPM NO2 AT 3% O2	
CA-0045	CHEVRON USA, INC.	66.5 MMBTU/H	04/08/82	40 PPM NO2 AT 3% O2	
CA-0045	CHEVRON USA, INC.	15 MMBTU/H	04/08/82	40 PPM NO2 AT 3% O2	
CA-0045	CHEVRON USA, INC.	28 MMBTU/H	04/08/82	40 PPM NO2 AT 3% O2	
CA-0045	CHEVRON USA, INC.	57 MMBTU/H	04/08/82	40 PPM NO2 AT 3% O2	
CA-0045	CHEVRON USA, INC.	19 MMBTU/H	04/08/82	40 PPM NO2 AT 3% O2	
CA-0045	CHEVRON USA, INC.	18 MMBTU/H	04/08/82	40 PPM NO2 AT 3% O2	
CA-0030	GETTY OIL CO.	240 BBL/D	08/24/82	0.15 LB/MMBTU PER GEN.	
BAAQMD	PACIFIC REFINERY MODIFICATION	275 MMBTU/HR	09/28/83	20 PPM NOX AT 3% O2	
SANTA BARBARA	CHEVRON USA & GAVIOTA OIL & GAS FAC.	9.44 MMBTU/HR	02/06/86	1.42 LB/HR	

TABLE C-5. REFINERY HEATERS

FACILITY ID	COMPANY NAME	NOX CONTROL	NOX CONTROL EFFICIENCY	STATE CONTACT	PHONE NUMBER
CA-0057	EXXON CO., USA	LOW NOX BURNERS & THERMAL DE-NOX	70	LEONARD CLAYTON	(415)-771-6000
CA-0046	TOSCO CORP.	LOW NOX BURNERS / SCR	70	JIM KARAS	(415)-771-6000
CA-0046	TOSCO CORP.	LOW NOX BURNERS/1 SCR UNIT FOR BOTH FURNACES	70	JIM KARAS	(415)-771-6000
CA-0045	CHEVRON USA, INC.	ONE SCR UNIT ON FURN. 7,8,9,10		JOHN SWANSON	(415)-771-6000
CA-0045	CHEVRON USA, INC.	ONE SCR UNIT ON FURN. 7,8,9,10		JOHN SWANSON	(415)-771-6000
CA-0045	CHEVRON USA, INC.	ONE SCR UNIT ON FURNACES 1,2,3		JOHN SWANSON	(415)-771-6000
CA-0045	CHEVRON USA, INC.	ONE SCR UNIT ON FURN. 7,8,9,10		JOHN SWANSON	(415)-771-6000
CA-0045	CHEVRON USA, INC.	ONE SCR UNIT ON FURNACES 1,2,3		JOHN SWANSON	(415)-771-6000
CA-0045	CHEVRON USA, INC.	ONE SCR UNIT ON FURNACES 4,5,6		JOHN SWANSON	(415)-771-6000
CA-0045	CHEVRON USA, INC.	ONE SCR UNIT ON FURN. 7,8,9,10		JOHN SWANSON	(415)-771-6000
CA-0045	CHEVRON USA, INC.	ONE SCR UNIT ON FURNACES 4,5,6		JOHN SWANSON	(415)-771-6000
CA-0045	CHEVRON USA, INC.	ONE SCR UNIT ON FURNACES 1,2,3		JOHN SWANSON	(415)-771-6000
CA-0045	CHEVRON USA, INC.	ONE SCR UNIT ON FURNACES 4,5,6		JOHN SWANSON	(415)-771-6000
CA-0030	GETTY OIL CO.	SNCR	63	JOE SLAMOVICH	(415)-974-8235
BAAQMD	PACIFIC REFINERY MODIFICATION	NH3 INJ & SCR	85	LEONARD CLAYTON	(415)-771-6000
SANTA BARBARA	CHEVRON USA & GAVIOTA OIL & GAS FAC.	LNB		BILL MASTER	(805)-964-8111

APPENDIX D

NO_X CONTROL DATA

MUNICIPAL WASTE AND SLUDGE INCINERATORS

Description of Terms Used in the Following Table(s)

Facility ID:	Identifier used in the BACT/LAER Clearinghouse or region/county where facility is located
Permit Date:	Permit or start-up date (unit may be canceled after permit approval)
NO_x Primary Limit:	NO_x permit limit
NO_x Secondary Limit:	NO_x permit limit expressed in different units or for back-up fuel
NO_x Control Efficiency:	NO_x control efficiency as stated in the permit
Contact Name:	State agency contact
A/F:	Air to fuel ratio
FGR:	Flue gas recirculation
LNB:	Low NO_x burner
LNC:	Low NO_x combustion
NSCR:	Non-selective catalytic reduction
SCR:	Selective catalytic reduction
SNCR:	Selective non-catalytic reduction

TABLE D-1. WASTE INCINERATORS

FACILITY ID	COMPANY NAME	NOX CONTROL	NOX CONTROL EFFICIENCY	STATE CONTACT NAME	PHONE NUMBER
AL-0029	HUNTSVILLE SOLID WASTE AUTHORITY	COMBUSTION DESIGN		SUE ROBERTSON	(205)-271-7861
AL-0029	HUNTSVILLE SOLID WASTE AUTHORITY	COMBUSTION DESIGN		SUE ROBERTSON	(205)-271-7861
CA-0021	WATSON ENERGY SYS, INC.	COMBUSTION MODIFICATION		BOB BAKER	(415)-974-8220
CA-0107	COMMERCE REFUSE-TO-ENERGY	THERMAL DE-NOX & COMBUSTION MOD.	50	T. HUNT	(818)-572-6203
SCAQMD	COMMERCE REFUSE-TO-ENERGY	THERMAL DE-NOX/COMB. MODIFICATIONS	50	T. HUNT	(818)-572-6203
CA-0132	NORTH COUNTY RESOURCE RECOVERY ASSOC.	STAGED COMBUSTION, DESIGN		JUDITH LAKE	(619)-565-5908
CA-0132	NORTH COUNTY RESOURCE RECOVERY ASSOC.	BOILER DESIGN & OVER/UNDERFIRE AIR		BOB BAKER	(415)-974-8923
CA-0280	NEA MESQUITE POWER	FLUID BED/PYROLSIS		HARRY DILLON	(619)-339-4650
CA-0121	WESTERN POWER GROUP	MULT. HEARTH FURNACE W/RECIR FL		JIM HANSON	(415)-974-8218
CA-0154	TRI-CITIES RESOURCE RECOVERY	COMBUSTION MODIFICATION; FGR		BRIAN BATEMAN	(415)-771-6000
CA-0130	KAISER ENGINEERS CORP.	STAGED COMBUSTION; FGR	25	JIM HANSON	(415)-974-8218
CA-0185	STANISLAUS WASTE ENERGY CO.	AMMONIA INJECTION	40	BOB BAKER	(415)-974-8923
CT-0002	MID-CONNECTICUT RESOURCE RECOVERY FAC.	OPTIMUM COMBUSTION		ALFRED CONKLIN	(203)-566-8230
CT-0004	OGDEN MARTIN SYSTEMS OF BRISTOL	OPTIMUM COMBUSTION		ALFRED CONKLIN	(203)-566-8230
CT-0023	AMERICAN REF FUEL OF SE CONNECTICUT	COMBUSTION TECHNIQUES		MARK HULTMAN	(203)-566-8230
CT-0023	AMERICAN REF FUEL OF SE CONNECTICUT	COMBUSTION TECHNIQUES		MARK HULTMAN	(203)-566-8230
CT-0029	EXETER ENERGY LIMITED PARTNERS	THERMAL DE-NOX	50	MARK HULTMAN	(203)-566-8230
CT-0029	EXETER ENERGY LIMITED PARTNERS	THERMAL DE-NOX	50	MARK HULTMAN	(203)-566-8230
CT-0046	MATTABASSETT DISTRICT	COMBUSTION METHODS		MARK PEAK	(203)-566-8230
CT-0094	CONNECTICUT RESOURCES RECOVERY AUTHORITY	COMBUSTION METHODS		ANITA MASIH	(203)-566-8230
CT-0006	WALLINGFORD R.R. ASSOC, L.P.	COMBUSTION CONTROLS		JOSEPH ULEVICUS	(203)-566-8230
CT-0006	WALLINGFORD R.R. ASSOC, L.P.	COMBUSTION CONTROLS		JOSEPH ULEVICUS	(203)-566-8230
CT-0006	WALLINGFORD R.R. ASSOC, L.P.	COMBUSTION CONTROLS		JOSEPH ULEVICUS	(203)-566-8230
CT-0010	BRIDGEPORT RESOURCE RECOVERY FACILITY	COMBUSTION METHODS		JOSEPH ULEVICUS	(203)-566-8230
CT-0010	BRIDGEPORT RESOURCE RECOVERY FACILITY	COMBUSTION METHODS		JOSEPH ULEVICUS	(203)-566-8230

TABLE D-1. WASTE INCINERATORS

FACILITY ID	COMPANY NAME	FACILITY SIZE	PERMIT DATE	NOX PRIMARY PERMIT LIMIT	NOX SECONDARY PERMIT LIMIT
AL-0029	HUNTSVILLE SOLID WASTE AUTHORITY	116.3 MMBTU/H	10/06/87	11.63 LB/H	0.1 LB/MMBTU
AL-0029	HUNTSVILLE SOLID WASTE AUTHORITY	129.4 MMBTU/H	10/06/87	0.46 LB/MMBTU	59.2 LB/H
CA-0021	WATSON ENERGY SYS, INC.	1440 T/D	01/03/80		83 LB/H
CA-0107	COMMERCE REFUSE-TO-ENERGY	330 T/D	05/08/84	40 LB/H	966 LB/D
SCAQMD	COMMERCE REFUSE-TO-ENERGY	330 T.P.D.	05/08/84	40 LB/HR	
CA-0132	NORTH COUNTY RESOURCE RECOVERY ASSOC.	46.4 T/H RDF	11/30/84	200 PPMV, 8 H AVG	169 LB/H
CA-0132	NORTH COUNTY RESOURCE RECOVERY ASSOC.	1024 T/D	04/02/85	200 PPM AT 12% CO2, 2 HAVG	
CA-0280	NEA MESQUITE POWER	416 MMBTU/H	07/01/85		0.02 LB/MMBTU
CA-0121	WESTERN POWER GROUP	40 T/H MANURE	11/21/85	135 LB/H	
CA-0154	TRI-CITIES RESOURCE RECOVERY	480 T/D	12/03/85	200 PPMVD AT 12% O2	
CA-0130	KAISER ENGINEERS CORP.	480 T/D MSW	12/31/85	68.5 LB/H	200 PPMDV
CA-0185	STANISLAUS WASTE ENERGY CO.	400 T/D	08/11/86	175 PPM AT 12% CO2, 3 HAVG	
CT-0002	MID-CONNECTICUT RESOURCE RECOVERY FAC.	249 MMBTU/H, COAL	04/18/85	0.6 LB/MMBTU HEAT INPUT	
CT-0004	OGDEN MARTIN SYSTEMS OF BRISTOL	325 T/D MSW	09/09/85	0.6 LB/MMBTU HEAT INPUT	
CT-0023	AMERICAN REF FUEL OF SE CONNECTICUT	300 T/D	12/12/88	0.6 LB/MMBTU	
CT-0023	AMERICAN REF FUEL OF SE CONNECTICUT	300 T/D	12/12/88	0.6 LB/MMBTU	
CT-0029	EXETER ENERGY LIMITED PARTNERS	12320 LB/H	06/22/89	0.12 LB/MMBTU	
CT-0029	EXETER ENERGY LIMITED PARTNERS	12320 LB/H	06/22/89	0.12 LB/MMBTU	
CT-0046	MATTABASSETT DISTRICT	2 T/H	09/29/89		0.347 LB/MMBTU
CT-0094	CONNECTICUT RESOURCES RECOVERY AUTHORITY	1300 SCFM	09/29/89	0.08 LB/MMBTU	
CT-0006	WALLINGFORD R.R. ASSOC, L.P.	5.83 T/H	12/05/89	0.6 LB/MMBTU	
CT-0006	WALLINGFORD R.R. ASSOC, L.P.	5.83 T/H	12/05/89	0.6 LB/MMBTU	
CT-0006	WALLINGFORD R.R. ASSOC, L.P.	5.83 T/H	12/05/89	0.6 LB/MMBTU	
CT-0010	BRIDGEPORT RESOURCE RECOVERY FACILITY	31.23 T/H	02/15/90	0.6 LB/MMBTU	
CT-0010	BRIDGEPORT RESOURCE RECOVERY FACILITY	31.23 T/H	02/15/90	0.6 LB/MMBTU	

TABLE D-1. WASTE INCINERATORS

FACILITY ID	COMPANY NAME	FACILITY SIZE	PERMIT DATE	NOX PRIMARY PERMIT LIMIT	NOX SECONDARY PERMIT LIMIT
CT-0010	BRIDGEPORT RESOURCE RECOVERY FACILITY	31.23 T/H	02/15/90	0.6 LB/MMBTU	
CT-0005	CONN. RESOURCE RECOVERY AUTHORITY	326 MMBTU/H	03/01/90	0.6 LB/MMBTU	
CT-0005	CONN. RESOURCE RECOVERY AUTHORITY	326 MMBTU/H	03/01/90	0.6 LB/MMBTU	
CT-0005	CONN. RESOURCE RECOVERY AUTHORITY	326 MMBTU/H	03/01/90	0.6 LB/MMBTU	
FL-0030	MCKAY BAY REFUSE-TO-ENERGY PROJECT	1000 T/D WASTE	07/02/82	300 LB/H	
FL-0033	PUBLIC WORKS & UTILITIES	1050 T/D	01/27/84	132 LB/H	
FL-0036	WEST PALM BEACH SOLID WASTE RESOURCE REC	700 T/D RDF	12/16/86	0.32 LB/MMBTU	
FL-0037	SOUTH BROWARD COUNTY RESOURCE RECOVERY F	863 T/D	05/15/87	0.56 LB/MMBTU	
FL-0038	NRG RECOVERY GROUP	250 T/D	02/19/88	385 PPMDV	
FL-0039	PASCO COUNTY	1200 T/D	09/22/88	0.643 LB/MMBTU	
GA-0017	RESOURCE RECOVERY DEVELOPMENT AUTHORITY	100 MMBTU/H	04/05/84	32 LB/H	
HI-0004	CITY & COUNTY OF HONOLULU, H-POWER	850 T/D	11/19/87	260 PPMV, DRY AT 12% CO2	340 LB/H, 3H AVG
IN-0026	OGDEN MARTIN SYSTEMS OF INDIANAPOLIS	726 T/D	03/24/86	272 PPMV AT 12% CO2	
MA-0001	REFUSE FUELS, INC.	960 T/D RDF	03/23/81	0.7 LB/MMBTU RDF	0.3 LB/MMBTU OIL
MA-0002	ENERGY ANSWERS CORP.	600 T/D RDF EA	03/15/82	0.5 LB/MMBTU	
MA-0004	NESWC RESOURCE RECOVERY FACILITY	19.6 MMBTU/H	05/27/82	0.155 LB/MMBTU	
MA-0004	NESWC RESOURCE RECOVERY FACILITY	750 T/D EA, WASTE	05/27/82	0.32 LB/MMBTU	
MD-0002	MUNICIPAL INCINERATOR PULASKI HWY	600 T/D MSW	01/25/80	2.6 PPM	11.4 T/YR
MD-0005	N.E. MARYLAND WASTE DISPOSAL AUTHORITY	2010 T/D	09/10/81	227 LB/H	999 T/YR
MI-0039	CE - RESOURCE RECOVERY SYSTEMS	45.7 T RDF/H EA	11/09/84	226 LB/H	
MI-0066	JACKSON COUNTY BOARD OF PUBLIC WORKS	200 T/D	03/18/86	311 PPMV DRY AT 12% CO2	
MI-0090	KENT COUNTY DEPT. OF PUBLIC WORKS	125 MMBTU/H	09/15/87	400 PPMV 1H AVG	
MN-0009	HENNEPIN ENERGY RESOURCE CO.	1212 T/D	01/27/87	250 PPM CORR. TO 12% CO2	35 PPMV 3H AVG
NC-0053	GASTON COUNTY MSW DISPOSAL FACILITY	460 T/D	05/18/90	150 PPMV CORR TO 7% O2	
NH-0001	VICON RECOVERY SYSTEMS	140 T/D	05/22/87	0.33 LB/MMBTU	17.5 LB/H MAX

TABLE D-1. WASTE INCINERATORS

FACILITY ID	COMPANY NAME	NOX CONTROL	NOX CONTROL EFFICIENCY	STATE CONTACT NAME	PHONE NUMBER
CT-0010	BRIDGEPORT RESOURCE RECOVERY FACILITY	COMBUSTION METHODS		JOSEPH ULEVICUS	(203)-566-8230
CT-0005	CONN. RESOURCE RECOVERY AUTHORITY	COMBUSTION CONTROLS		JOSEPH ULEVICUS	(203)-566-8230
CT-0005	CONN. RESOURCE RECOVERY AUTHORITY	COMBUSTION CONTROLS		JOSEPH ULEVICUS	(203)-566-8230
CT-0005	CONN. RESOURCE RECOVERY AUTHORITY	COMBUSTION CONTROLS		JOSEPH ULEVICUS	(203)-566-8230
FL-0030	MCKAY BAY REFUSE-TO-ENERGY PROJECT	COMBUSTION TECHNIQUE		JOHN SVEC	(904)-488-1344
FL-0033	PUBLIC WORKS & UTILITIES	DESIGN		BOB KING	(904)-488-1344
FL-0036	WEST PALM BEACH SOLID WASTE RESOURCE RECOPERATION			MICHAEL BRANDON	(404)-347-2864
FL-0037	SOUTH BROWARD COUNTY RESOURCE RECOVERY FOPERATION			MICHAEL BRANDON	(404)-347-2864
FL-0038	NRG RECOVERY GROUP			BARRY ANDREWS	(904)-488-1344
FL-0039	PASCO COUNTY	COMBUSTION CONTROL		BARRY ANDREWS	(904)-488-1344
GA-0017	RESOURCE RECOVERY DEVELOPMENT AUTHORITY	FURNACE DESIGN, OPER. PROCEDURES		PAUL IZANT	(404)-656-4867
HI-0004	CITY & COUNTY OF HONOLULU, H-POWER	COMBUSTION CONTROL		DAVID TUNISON	(808)-548-6410
IN-0026	OGDEN MARTIN SYSTEMS OF INDIANAPOLIS	COMBUSTION CONTROLS		DAVID JORDAN	(317)-633-5497
MA-0001	REFUSE FUELS, INC.	BOILER DESIGN		JOHN COURCIER	(617)-223-4448
MA-0002	ENERGY ANSWERS CORP.			JOHN COURCIER	(617)-223-4448
MA-0004	NESWC RESOURCE RECOVERY FACILITY	BOILER DESIGN		JOHN COURCIER	(617)-223-4448
MA-0004	NESWC RESOURCE RECOVERY FACILITY	INCINERATOR DESIGN		JOHN COURCIER	(617)-223-4448
MD-0002	MUNICIPAL INCINERATOR PULASKI HWY	PROPER COMBUSTION TECHNIQUES		ED VOLLBERG	(215)-597-8990
MD-0005	N.E. MARYLAND WASTE DISPOSAL AUTHORITY			BOB BLASZCZAK	(215)-597-8186
MI-0039	CE - RESOURCE RECOVERY SYSTEMS	OPTIMUM COMB. COND. SPECIFIED		RANDAL TELESZ	(517)-373-7023
MI-0066	JACKSON COUNTY BOARD OF PUBLIC WORKS			LYNN FIEDLER	(517)-373-7023
MI-0090	KENT COUNTY DEPT. OF PUBLIC WORKS	COMBUSTION MODIFICATION TECHNIQUES		RANDAL TELESZ	(517)-373-7023
MN-0009	HENNEPIN ENERGY RESOURCE CO.	COMBUSTION CONTROL		LOUIS CHAMBERLAIN	(612)-296-7625
NC-0053	GASTON COUNTY MSW DISPOSAL FACILITY	COMBUSTOR TECHNOLOGY		SAMMY AMERSON	(919)-733-3340
NH-0001	VICON RECOVERY SYSTEMS	COMBUSTION CONTROLS		JAMES MARSTON	(603)-271-1370

TABLE D-1. WASTE INCINERATORS

FACILITY ID	COMPANY NAME	FACILITY SIZE	PERMIT DATE	NOX PRIMARY PERMIT LIMIT	NOX SECONDARY PERMIT LIMIT
NH-0002	SIGNAL ENVIRONMENTAL SERVICES	288 T/D	12/09/87	0.61 LB/MMBTU	65.8 LB/H MAX
NJ-0007	AMERICAN REF-FUEL OF ESSEX COUNTY		12/11/85	95 LB/H	300 PPMVD AT 7% O2
NY-0020	SIGNAL BROOKLYN	3000 T/D			
NY-0002	HOOKER ENERGY CORP.	2360 T/D REFUSE	07/23/81	0.7 LB/MMBTU COAL	0.3 LB/MMBTU OIL
NY-0012	DUTCHESS COUNTY RESOURCE RECOVERY	400 T/D	10/14/83	50 LB/H	
NY-0019	ISLIP RESOURCE RECOVERY AGENCY	259 T/D	11/30/84	32.4 LB/H EA	
NY-0017	REFUSE INCINERATION	375 T/D	01/31/86	6.6 LB/T MSW	
NY-0018	AMERICAN REFFUEL	750 T/D	11/06/86	255 PPMDV	
OH-0080	MONTGOMERY CNTY NORTH & SOUTH REDUCTION	300 T/D		3.2 LB/T	
OH-0074	ALTERNATIVE FUELS INDUSTRIES	120 T/D	06/17/85	16.6 LB/H	
OH-0087	MILL CREEK TREATMENT PLANT - MSD		12/31/86	5 LB/T DRY	
OH-0087	MILL CREEK TREATMENT PLANT - MSD		12/31/86	5 LB/T DRY	
OH-0155	BFI OF OHIO & MICHIGAN, INC.		04/27/88	0.01 LB/MMBTU	
OH-0155	BFI OF OHIO & MICHIGAN, INC.		04/27/88	6 LB/T CHARGED	
OK-0021	OGDEN MARTIN SYSTEMS OF TULSA, INC.	375 T/D	03/20/86	200 LB/H	
OK-0021	OGDEN MARTIN SYSTEMS OF TULSA, INC.	375 T/D	03/20/86	100 LB/H	
OR-0004	OGDEN MARTIN SYSTEMS OF MARION, INC.	275 T/D	12/19/83	122.2 LB/H	492 T/YR
PA-0037	DRAVO ENERGY RESOURCES	600 T/D	07/23/87	300 PPMV	
PA-0055	CHESTER SOLID WASTE ASSOCIATES	448 T/D	09/23/88	235 PPMV, DAILY AVG	
PA-0056	LANCASTER COUNTY SOLID WASTE MANAGEMENT	400 T/D	02/22/89	300 PPMV, DAILY AVG	
PA-0070	GLENDON ENERGY CO.	250 T/D	02/05/90	200 PPMV, 24H	
PR-0001	SAN JUAN RESOURCE RECOVERY FACILITY	1040 T/D	09/25/89	147 PPMV, 12 MON AVG	
PR-0001	SAN JUAN RESOURCE RECOVERY FACILITY	1040 T/D	09/25/89	50.58 LB/H	241 PPMV, 1H AVG
RI-0007	QUONSET POINT RESOURCE RECOVERY FACILITY	375 T/D	10/04/89	300 PPMVD AT 12% CO2	
TX-0158	CITY OF CLEBURNE	1.6 T/H	02/27/85	17.08 T/YR	

TABLE D-1. WASTE INCINERATORS

FACILITY ID	COMPANY NAME	NOX CONTROL	NOX CONTROL EFFICIENCY	STATE CONTACT NAME	PHONE NUMBER
NH-0002	SIGNAL ENVIRONMENTAL SERVICES	COMBUSTION CONTROL		JAMES MARSTON	(603)-271-1370
NJ-0007	AMERICAN REF-FUEL OF ESSEX COUNTY			ROBERT YEATES	(609)-292-0418
NY-0020	SIGNAL BROOKLYN	SNCR	60	PAUL KAHN	(212)-264-6674
NY-0002	HOOKER ENERGY CORP.	CONTRL METHOD: TEMP & E.A.		BARRY TORNICK	(212)-264-9579
NY-0012	DUTCHESS COUNTY RESOURCE RECOVERY	PROPER BOILER DESIGN		JAMES HARRINGTON	(518)-457-2018
NY-0019	ISLIP RESOURCE RECOVERY AGENCY	COMBUSTION CONTROL		JAMES HARRINGTON	(518)-457-2044
NY-0017	REFUSE INCINERATION	FURNACE DESIGN		DICK FORGEA	(518)-457-2044
NY-0018	AMERICAN REFFUEL	FURNACE DESIGN		DICK FORGEA	(518)-457-2044
OH-0080	MONTGOMERY CNTY NORTH & SOUTH REDUCTION	COMBUSTION CONTROL		VICTORIA HATHAWAY-SARVER	(513)-225-4438
OH-0074	ALTERNATIVE FUELS INDUSTRIES			THOMAS TUCKER	(513)-251-8777
OH-0087	MILL CREEK TREATMENT PLANT - MSD			PEG GROEBER	(513)-251-8777
OH-0087	MILL CREEK TREATMENT PLANT - MSD			PEG GROEBER	(513)-251-8777
OH-0155	BFI OF OHIO & MICHIGAN, INC.			DALE KRYGIELSKI	(419)-693-0350
OH-0155	BFI OF OHIO & MICHIGAN, INC.			DALE KRYGIELSKI	(419)-693-0350
OK-0021	OGDEN MARTIN SYSTEMS OF TULSA, INC.			JIM VAN SANDT	(918)-744-1000
OK-0021	OGDEN MARTIN SYSTEMS OF TULSA, INC.			JIM VAN SANDT	(918)-744-1000
OR-0004	OGDEN MARTIN SYSTEMS OF MARION, INC.	EQUIPMENT DESIGN & OPERATION		WENDY SIMS	(503)-229-6414
PA-0037	DRAVO ENERGY RESOURCES			BILL SCHILDT	(717)-787-9256
PA-0055	CHESTER SOLID WASTE ASSOCIATES	COMBUSTION CONTROL		THOMAS MCGINLEY	(215)-270-1920
PA-0056	LANCASTER COUNTY SOLID WASTE MANAGEMENT	COMBUSTION CONTROL		KANUBHAI PATEL	(717)-657-4587
PA-0070	GLENDON ENERGY CO.	SNCR		THOMAS MCGINLEY	(215)-270-1920
PR-0001	SAN JUAN RESOURCE RECOVERY FACILITY	COMBUSTION CONTROL		HARISH PATEL	(212)-264-6683
PR-0001	SAN JUAN RESOURCE RECOVERY FACILITY	COMBUSTION CONTROL		HARISH PATEL	(212)-264-6683
RI-0007	QUONSET POINT RESOURCE RECOVERY FACILITY	COMBUSTION CONTROL		DOUG MCVAY	(401)-277-2808
TX-0158	CITY OF CLEBURNE			JAMES RANDALL	(512)-451-5711

TABLE D-1. WASTE INCINERATORS

FACILITY ID	COMPANY NAME	FACILITY SIZE	PERMIT DATE	NOX PRIMARY PERMIT LIMIT	NOX SECONDARY PERMIT LIMIT
UT-0038	BFI MEDICAL WASTE SYSTEMS, INC.	1350 LB/H		6.95 LB/H	215 PPM
UT-0032	KATY SEGHERS	500 T/D	02/24/84	29.9 LB/H	
UT-0035	PREFERRED REDUCTION SERVICES, INC.	1000 LB/H	05/19/89	3.8 LB/H	250 PPM
UT-0037	CONTINENTAL THERMAL DESTRUCTION	2100 LB/H	12/13/89	3.7 LB/H	
VA-0026	NORFOLK NAVAL SHIPYARD	180000 LB/D	03/26/84	0.7 LB/MMBTU	
VA-0024	ARLINGTON/ALEXANDRIA WASTE-TO-ENERGY PLT	975 T/D	10/04/84		
VA-0055	I-95 ENERGY/RESOURCE RECOVERY FACILITY	750 T/D	01/12/87	151.3 LB/H	602.3 T/YR
VA-0140	OGDEN/MARTIN SYSTEMS OF ALEXANDRIA	302000 T/YR	07/26/88	79 LB/H	310 T/YR
VT-0003	VICON RECOVERY SYSTEMS	240 T/D	03/20/84	3.6 LB/T	
VT-0003	VICON RECOVERY SYSTEMS	120 T/D	09/11/86	36 LB/H	
WI-0051	P. H. GLATFELTER CO.	7 T/H DRY	01/09/90	285 PPM AT 7% O2	

TABLE D-1. WASTE INCINERATORS

FACILITY ID	COMPANY NAME	NOX CONTROL	NOX CONTROL EFFICIENCY	STATE CONTACT NAME	PHONE NUMBER
UT-0038	BFI MEDICAL WASTE SYSTEMS, INC.			DAVE KOPTA	(801)-538-6108
UT-0032	KATY SEGHERS	COMBUSTION CONTROL		DAVID KOPTA	(801)-533-6108
UT-0035	PREFERRED REDUCTION SERVICES, INC.			DAVE KOPTA	(801)-558-6108
UT-0037	CONTINENTAL THERMAL DESTRUCTION	GAS SCRUBBER		DAVE KOPTA	(801)-538-6108
VA-0026	NORFOLK NAVAL SHIPYARD	COMBUSTION CONTROL		JAMES LEHAN	(804)-786-4867
VA-0024	ARLINGTON/ALEXANDRIA WASTE-TO-ENERGY PLT			KATHERINE MILLER	(804)-786-4867
VA-0055	I-95 ENERGY/RESOURCE RECOVERY FACILITY	COMBUSTION CONTROLS		CATHY TAYLOR	(804)-786-4867
VA-0140	OGDEN/MARTIN SYSTEMS OF ALEXANDRIA	COMBUSTION CONTROL		JACK SCHUBERT	(804)-786-0172
VT-0003	VICON RECOVERY SYSTEMS			LARRY MILLER	(802)-828-3395
VT-0003	VICON RECOVERY SYSTEMS	COMBUSTION MODIFICATION		HAROLD GARABEDIAN	(802)-244-8731
WI-0051	P. H. GLATFELTER CO.	SNCR	50	PAUL YEUNG	(608)-266-0672

APPENDIX E

NO_x CONTROL DATA

WEST GERMANY

	Page
Trip Report, Cooper Energy Services International, Inc. (Dusseldorf)	E-2
Trip Report, DEPOGAS (Berlin)	E-5
Trip Report, Energie und Wasserversorgung (Nuremburg)	E-7
Trip Report, H. Krantz, GmbH (Aachen)	E-10
Trip Report, Karl Reum, GmbH (Hardheim)	E-12
Trip Report, Landeszentralbank Niedersachsen (Hanover)	E-14
Trip Report, MAN Technologie AG (Augsburg)	E-16
Trip Report, Peissenberger Kraftwerksgesellschaft, GmbH (Peissenberg)	E-18
Trip Report, Stadtwerke Dreieich (Dreieich)	E-21
Trip Report, Stadtwerke Norderstedt (Norderstedt)	E-23
Trip Report, Universitat Technique (Hamburg-Harburg)	E-26

TRIP REPORT

I. PURPOSE

The U.S. Environmental Protection Agency (EPA) is gathering information to provide State and local agencies with information on NO_X control technologies for stationary industrial combustion sources. The objective of the European field trips is to collect design, operating history, and cost information from state-of-art NO_X control sites.

II. PLACE AND DATE

Cooper Energy Services International, Inc.
Morsenbroicher Weg 200
4000 Dusseldorf 30, West Germany
November 9, 1989

III. SITE CONTACT

Herr Konitzer, Cooper Vulcan

IV. DISCUSSION

Cooper Energy Services International, Inc. was visited by Radian Corporation to acquire data on state-of-the-art NO_X control for IC engines and combustion turbines in West Germany. Performance specifications for engines and gas turbines was obtained, as well as TA Luft regulations for combustion sources.

Background

Cooper Vulken is a joint venture company, 70 percent owned by Cooper Industries in the U.S. and 30 percent owned by Brammer Vulcan, a manufacturer of ship engines. Cooper Bessemer manufacturers combustion turbines in conjunction with Rolls Royce. Cooper Bessemer has developed and marketed combustion turbines with dry low NO_X combustors as well as clean burn IC engines with low NO_X emissions.

TA Luft Regulations

The NO_X control requirements specified by the TA Luft for combustion turbines is 300 mg/m^3 NO_X at 15 percent O_2 on a dry basis, maximum (refer to Appendix H for unit conversion factors). However, if the combustion turbine is greater than 30 percent efficient, the NO_X control requirements are proportional to the efficiency as follows:

(actual thermal efficiency, %/30 %) x (300 mg/m3)

(put in conversion of mg/m^3 ppm/16/MMBtu).

The CO and VOC (non-methane) emission limits for combustion turbines are 100 mg/m^3 and 150 mg/m^3, respectively. Some VOC pollutants have special limits such as aldehydes at 20 mg/m^3 and carcinogens at 5 mg/m^3, maximum. The regulations for gas turbines are expected to be changed within a year. The new NO_x limit is anticipated to be roughly half of the existing level, or 150 mg/m^3 at 15 percent oxygen, with no variance based on thermal efficiency. Existing units are expected to be required to meet the new lower limits by 1994.

For natural gas-fired engines, the regulations are different for 2-stroke and 4-stroke engines. For 2-stroke engines, the NO_x emissions limit is 800 mg/m^3 at 5 percent oxygen (equivalent to the 300 mg/m^3 at 15 percent O_2 required for gas turbines). The emission limits for CO and VOC (non-methane) are 650 mg/m^3 and 150 mg/m^3, respectively, at 5 percent oxygen.

For 4-stroke natural gas-fired engines, the maximum NO_x concentration in the flue gas is 500 mg/m^3 at 5 percent oxygen. The CO and VOC emission limits are the same as for the 2-stroke engines, 650 mg/m^3 and 150 mg/m^3, respectively.

No emissions offsetting is allowed in West Germany by the TA Luft. The regulations are imposed such that emissions cannot exceed the guidelines; however, in some cases the maximum limit may be required to be lower than the standard guideline.

Cooper Bessemer Combustion Turbines

The Cooper 2000 gas turbine (12 MW) operates at 30 percent thermal efficiency without wet injection with a dry low NO_x combustor. The Cooper 2000 gas turbine can achieve a 170 mg/m^3 NO_x limit at 15 percent oxygen without wet injection. This NO_x level is below the current TA Luft requirement of 300 mg/m^3; however, to meet the anticipated future requirement of 150 mg/m^3, the gas turbine would need to be operated at 5 to 10 percent derate. The CO emissions from the Cooper 2000 gas turbine is above 100 mg/m^3 at full load. A new combustor for the Cooper 2000 is now available which has low NO_x and meets the CO emission limit required by the TA Luft. One Cooper 2000 gas turbine with the new combustors was installed at the Ruhrgas Werne Station near Dortmond.

The Cooper 6000 gas turbine (24 MW) can achieve 340-350 mg/m^3 NO_x at full load. The Cooper 6000 has a thermal efficiency between 34 and 37 percent; therefore, the current TA Luft requirement is 340 mg/m^3 to 370 mg/m^3 NO_x.

Rolls Royce has launched a new development program to design and market a dry low NO_x combustor which can achieve 10 ppmv NO_x for commercial availability in 1994.

Cooper Bessemer IC Engines

Cooper Bessemer uses the clean-burn technology to control NO_x emissions in both the 2-stroke and 4-stroke natural gas-fired IC engines. The clean burn technology consists of premixing a rich mixture of air and fuel in a premix chamber, which is easily ignited. The flame then ignites a lean mixture of fuel and air within the combustion chamber. The clean burn engine operates below 300 mg/m^3 NO_x. The most efficient operation and lowest emissions of NO_x, CO, and VOC are achieved in the 80 to 100 percent load range.

There are about 20 clean burn engine units in operation. The largest clean burn engine available from Cooper Bessemer is an 11,000 hp 2-stroke model. Three 11,000 hp units are installed at two sites: Bierwenge and Krummhoern. Most clean burn engine units are owned and operated by Ruhrgas.

TRIP REPORT

I. PURPOSE

The U.S. Environmental Protection Agency (EPA) is gathering information to provide State and local agencies with information on NO_x control technologies for stationary industrial combustion sources. The objective of the European field trips is to collect design, operating history, and cost information from state-of-art NO_x control sites.

II. PLACE AND DATE

DEPOGAS
Berlin, Federal Republic of Germany
November 20, 1989

III. SITE CONTACTS

Herr Bottcher, DEPOGAS
Herr Schneider, DEPOGAS

IV. DISCUSSION

The DEPOGAS facility was visited by Radian Corporation to gather information on the facility's SCR system for NO_x control. Facility personnel provided SCR system design and operating history information, as well as a power plant tour within the facility.

Background

DEPOGAS operates a cogeneration power plant at the Berlin-Wannsee municipal waste disposal site. This landfill was closed in 1980. In 1983 an existing oil-fired boiler at the Hahn-Meitner Institute was converted to fire landfill gas. Gas collection/treatment and cogeneration plant construction was conducted in 1986-1987, with power plant start-up in early 1988. The cogeneration plant began continuous operation in March 1988, with official power plant commissioning in October 1988.

The 4.5 MW_e power plant consists of three 1.5 MW_e gas engines, the largest engines operating in Europe on landfill gas. The engine manufacturer is MWM Diesel in Hamburg (Herr Groth, Project Manager, phone number: 040-752-040).

SCR System Design

The SCR system was supplied by Steuler and uses a ceramic molecular sieve catalyst. The reactor housing is approximately 2m x 2m x 3m. The catalyst blocks are 150mm x 150mm x 300mm with approximately 25 cpi (cells per square inch).

The NH_3 injection is supplied by an aqueous solution of 25 percent NH_3 in water. There is a small heat exchanger prior to the catalyst to reduce the engine exhaust temperature from 520° C to a target SCR operating temperature of 430° C. The NO_X operating limit for each engine is approximately 225 ppm (see Appendix H for unit conversion factors).

SCR Operating History

During engine commissioning, using standard ignition plugs, NO_X emissions levels were on the order of 300-400 ppm. The SCR system injected NH_3, at about 25-30 liters/hr, intermittently for approximately 6 months in 1988 to reduce the NO_X emissions below the required level.

Initially the landfill gas had a methane content of 45-50 percent but then dropped to 35 percent. Engine load then had to be reduced to 70 percent of the rated capacity. MWM obtained some different chamber plugs (with the electrodes covered, not open) which both improved combustion and lowered the NO_X emissions. Since July 1988, NH_3 has only been injected periodically when there is a problem. Typically the units operate at approximately 175 ppm without NH_3 injection, based on the performance of the new ignition system.

The operating history for the engines is as follows:

Unit	Operating Hours	Number of Starts
1	7240	1580
2	7435	1680
3	6090	1450

NH_3 has been injected only on the order of 600 hours on each engine. The SCR units have had no catalyst replacement. The only SCR operating problems have involved the NH_3 resistance of pump/valve/piping gasket materials.

TRIP REPORT

I. PURPOSE

The U.S. Environmental Protection Agency (EPA) is gathering information to provide State and local agencies with information on NO_X control technologies for stationary industrial combustion sources. The objective of the European field trips is to collect design, operating history, and cost information from state-of-art NO_X control sites.

II. PLACE AND DATE

Energie und Wasserversorgung
Nuremburg, West Germany
November 13, 1989

III. SITE CONTACTS

Herr Wilfried Burau, Manager of $DeNO_X$ and $DeSO_X$ plant
Herr Gerhard Eckert - Plant Manager

IV. DISCUSSION

The Energie und Wasserversorgung facility was visited by Radian Corporation to gather information on the facility's SCR system for NO_X control. Facility personnel provided SCR design and operating history information, as well as a power plant tour within the facility.

Background

The Energie und Wasserversorguny facility operates three coal-fired cogeneration boiler which produce 125 tons/hr steam per boiler. The boilers have been in operation since 1982. In 1985, the first boiler were retrofitted to include an SCR NO_X control system. By 1988, all three boilers had been retrofitted with SCR and were in commercial operation. The SCR $DeNO_X$ system is located downstream of a desulfurization system and an electrostatic percipitator for particulate removal.

SCR System Design

The SCR system for each of the three coal-fired boilers was manufactured by Norton Company. The SCR catalyst is located downstream of the $DeSO_X$ system, where flue gas passes through the $DeSO_X$ plant absorber and filters at 68°C, and enters the $DeNO_X$ plant at 70-75°C after passing through a fan. The volumetric flow rate of the flue gas from each boiler is around 160,000 m^3/hr. The flue gas is heated from around 75°C to 320°C as it passes through a hot regenerator box. It is then heated from

320° to 350° C with a gas duct burner before reaching the SCR catalyst. Ammonia is premixed with a side stream of flue gas and is injected upstream of a static mixer. The normal NH_3/NO_x molar ratio is 0.9. The flue gas passes through two vertical SCR catalyst beds and then through a cold regenerator box which cools the flue gas to 80°-90° C before exiting the stack. Every six minutes a 4-way valve is switched to redirect flue gas from the cold regenerator to the hot regenerator.

The SCR catalyst volume is 43 m^3 in the catalyst bed, with a bed height of 0.4 m. The catalyst itself is Norton zeolite NC310 consisting of cylinders 1/4" long x 1/4" diameter with 1/8" opening. The pressure drop across the catalyst bed is 8-10 millibars. The SCR system is designed to achieve 92 percent NO_x reduction, or the guarantee limit of 200 mg/m^3 NO_x concentration (refer to Appendix H for unit conversion factors). The SO_2 concentration reaching the SCR catalyst is 400 mg/m^3, maximum.

The typical operating parameters include 3,500 to 4,000 hours per year operation; 900 mg/m^3 (maximum) NO_x emissions upstream of the SCR system (normally 500-750 mg/m^3); 1600 mg/m^3 SO_2 upstream of the $DeSO_x$ system, and 80 to 150 mg/m^3 SO_2 at the inlet of the $DeNO_x$ system. The SCR catalyst is sensitive to high particulate loading. The maximum particulate concentration is 30 mg/m^3, with the normal concentration at 10 mg/m^3.

The ammonia storage system consists of two ammonia tanks, 50 m^3 capacity each, for a two week supply of ammonia for all three catalyst trains.

SCR Operating History

The SCR catalyst system has been in operation for about 10,000 hours, during which time design and operating problems have been experienced. For example, an extensive heat up period, about 20 hours, is required for the catalyst bed to reach 350° C after start-up. The natural gas-fired burners which heat the flue gas to the catalyst operating temperature (350° C) are unstable when starting up due to condensation which collects inside the burners when they are not in operation. In addition, problems are occasionally encountered with the electronic switching of the 4-way values directing flue gas to the hot and cold regenerator boxes.

One of the SCR catalyst beds (train 1) was blinded by high particulate loading in the flue gas. The pressure drop across the catalyst bed increased to 20-25 mbars, which fluidized the catalyst bed and eventually entrained the catalyst out of the bed with the flue gas. The catalyst was deposited in the cold regenerator box which was subsequently washed with citric acid. Likewise, catalyst was entrained out of the reactor during start-up (from train 3) due to high pressure drop across the catalyst bed caused by particulate blinding. As a result, a monitor was installed to measure the particulate loading to the SCR system. Operation of the boilers is now limited to 200,000 m^3/hr flue gas flow rate to prevent fluidizing the catalyst bed.

Perm Conditions

The NO_x concentration limit required by the TA Luft is 400 mg/m^3; however, the SCR manufacturer's guarantee is 200 mg/m^3. The maximum NH_3/NO_x molar ratio is 0.94. The plant has a 90 minute variance after the catalyst reaches 350°C before NO_x emissions are regulated.

The maximum sulfur content of the coal fired in the boilers is 1.0 percent by weight. Typically, the sulfur content actually ranges between 0.8 and 1.0 percent. The maximum SO_2 emissions rate from the plant is 200 mg/m^3.

The facility is permitted to operate 240 hours per year bypassing the $DeSO_x$ and/or $DeNO_x$ systems.

SCR System Costs

The capital cost of the entire $DeNO_x$ SCR system was 42 million Deutsche Marks (DM) in 1985-1986 (current exchange rate is about 1.5 DM to a dollar). Each catalyst train, containing 43 m^3 of catalyst, cost 900,000 DM for the catalyst itself. The labor cost required to replace the 43 m^3 of catalyst is 100,000 DM.

The annual costs for ammonia for NO_x control and natural gas for duct burners is 101,000 DM and 276,000 DM, respectively. The maintenance and operating labor and supervision requirements for both the $DeNO_x$ and $DeSO_x$ plants require an additional 34 men per shift over the base power plant requirements. The annualized cost for capital charges and labor for both the $DeNO_x$ and $DeSO_x$ plants is 20 million DM.

TRIP REPORT

I. PURPOSE

The U.S. Environmental Protection Agency (EPA) is gathering information to provide State and local agencies with information on NO_X control technologies for stationary industrial combustion sources. The objective of the European field trips is to collect design, operating history, and cost information from state-of-art NO_X control sites.

II. PLACE AND DATE

H. Krantz, GmbH and Company
Postfach 2040
5100 Aachen, West Germany
November 9, 1989

III. SITE CONTACT

Herr Vaessen, Krantz

IV. DISCUSSION

The H. Krantz Company was visited by Radian Corporation to gather information on Krantz's NO_X control technique. Krantz personnel provided design and operating information for the Krantz NO_X control technology.

Background

H. Krantz Gmbh and Company working in joint collaboration with the Karlsruhe Nuclear Research Center, have developed a technique for removing both NO_X and SO_2 from boiler flue gas. The process consists of adsorbing SO_X and NO_X contained in the flue gas on activated coke in a single reactor.

Reaction Mechanisms

Flue gas is passed through a fixed bed of activated coke at a temperature between 100° and 120° C. SO_2 reacts on the surface of the activated coke with oxygen and water vapor to form sulfuric acid according to the following equation:

$$2\ SO_2 + O_2 + 2\ H_2O \rightarrow 2\ H_2SO_4$$

The sulfuric acid that is formed is absorbed on the surface of the activated coke. Thus, the activated coke acts both as an absorbent and catalyst. 100 kg activated coke can adsorb up to 15 kg of SO_2.

In addition, anhydrous ammonia is added to the flue gas upstream of the activated coke reactor which also selectively reduces NO_x across the catalyst bed.

Process Design

A multiple way-sorption filter is used which functions as an activated coke reactor. The system comprises two filter beds, stacked vertically, through which flue gas passes successively. The flue gas passes first through the lower filter bed where most of the SO_2 is removed, and enters a deflection chamber where ammonia is added. NO_x is reduced in the upper filter bed. Following saturation of the activated coke in the lower bed, the coke is removed. Coke from the upper bed is then changed into the lower bed and fresh coke is added to the upper bed. The spent coke can subsequently be used in other processes.

Residence time in the reactor is 10 to 20 seconds, with a flue gas flow rate of 0.1 to 0.15 m/sec. The pressure drop across the reactor is 15 to 50 mbar. The NO_x removal which is achieved is around 80 percent.

The NH_3 to NO_x molar ratio is 1.0. Ammonia slip is no greater than 10 ppm at 3 percent oxygen.

Operating History

The activated coke reactors have been used in a pilot system in Dusseldorf for removal of NO_x and SO_2. The Dusseldorf plant burns black coal as a fuel source in a boiler with 7000 m^3/hr exhaust gas flow rate. The activated coke filters were installed in 1986 for testing purposes. The spent coke from the Desseldorf pilot facility is burned in a cement kiln. Fresh activated coke is supplied by Rhine Brown Company in Koln. The testing program at Dusseldorf has not been completed.

System Costs

The material costs for the Krantz activated coke system include 400 DM per ton for activated coke, not including transportation costs (current exchange rate is about 1.5 DM to a dollar). The consumption rate of activated coke is based on 100 kg coke per 15 kg SO_2 removed.

TRIP REPORT

I. PURPOSE

The U.S. Environmental Protection Agency (EPA) is gathering information to provide State and local agencies with information on NO_X control technologies for stationary industrial combustion sources. The objective of the European field trips is to collect design, operating history, and cost information from state-of-art NO_X control sites.

II. PLACE AND DATE

Karl Reum GmbH
Industriestrasse 9
6969 Hardheim, West Germany
November 10, 1989

III. SITE CONTACT

Herr Rolf, Karl Reum GmbH

IV. DISCUSSION

The Karl Reum facility was visited by Radian Corporation to gather information on the facility's combustion modifications for NO_X control. Facility personnel provided engine design and operating history information, as well as a power plant tour within the facility.

Background

The Karl Reum facility operates three 460 kW IC engines to provide heating and electricity for tl facility. The engines are manufactured by Jenbacher Werke A. G. (model number JW324G) and utilize combustion modifications to control NO_X. The engines fire propane as the primary fuel with natural ga as a backup fuel.

Engine Design

The Jenbacher Werke engines are 16 cylinder machines which utilize two turbo chargers each for NO_X control. Air and fuel are premixed prior to being fired. The temperature of the premixed air/f mixture is about 45°C. The combustion temperature ranges between 800° and 900°C.

The engines are equipped with a catalytic oxidation system to control CO emissions.

Operating History

The engines were started up in March 1989. Initially, the site experienced problems with operating the engines; however, no major problems have been encountered since July 1989 (as of November 1989).

The hours of operation and number of starts per engine (as of November 1989) are as follows:

Engine	Hours of Operation	Number of Starts
1	2025	616
2	2125	596
3	2060	707

Permit Conditions

Compliance testing for the TA Luft was performed in July 1989. The tests are repeated every three years. The emissions tests for NO_x showed 440 mg/m^3 NO_x at 8.2 percent oxygen (see Appendix H for unit conversion factors).

TRIP REPORT

I. PURPOSE

The U.S. Environmental Protection Agency (EPA) is gathering information to provide State and local agencies with information on NO_X control technologies for stationary industrial combustion sources. The objective of the European field trips is to collect design, operating history, and cost information from state-of-art NO_X control sites.

II. PLACE AND DATE

Landeszentralbank Niedersachsen
Georgsplatz 5
3000 Hannover, West Germany
November 8, 1989

III. SITE CONTACTS

Herr Windhain, Landeszentralbank
Herr Adolf, Landeszentralbank

IV. DISCUSSION

The Landeszentralbank facility was visited by Radian Corporation to gather information on the facility's SCR system for NO_X control. Facility personnel provided SCR design and operating history information, as well as a power plant tour within the facility.

Background

The Landeszentralbank operates a dual fuel (90 percent natural gas mixed with 10 percent oil)-fired IC engine to produce heat and electricity for the bank building. No provisions to sell electricity back to the grid are in place. The engine, manufactured by MWM Diesel, has a 750 hp capacity. NO_X emissions are controlled by a zeolite catalyst SCR system manufactured by Steuler International. CO emissions are also controlled by a platinum-palladium catalytic oxidation system which comprises the first layer of catalyst within the SCR catalyst housing, according to Steuler design specifications. The SCR system was installed in 1986 and started-up in January 1987.

SCR System Design

The CO/SCR catalyst system is located upstream of the waste heat boiler. The exhaust gas temperature from the engine ranges between 320° and 480° C. The SCR catalyst is designed for 85 percent NO_x removal. The normal ammonia flow rate is 8 kg NH_3/hr (25 percent aqueous ammonia).

The SCR catalyst bed consists of around 200 catalyst blocks in the reactor, each block being 152 mm x 152 mm x 300 mm within the first five layers. A sixth layer with blocks 158 mm x 120 mm x 120 mm is included. The site personnel claim that the sixth layer is not a CO catalyst; however, the Steuler design specifications discuss CO catalyst as part of the design.

SCR Operating History

The SCR catalyst system has performed according to the design specifications since start-up. The NO_x outlet concentration and ammonia flow rates are presently the same as the initial rates with fresh catalyst. No replacement of catalyst has been required. The catalyst was examined in October 1988 with no visible signs of blinding or poisoning. The total catalyst operating time (as of November 1989) is 4,800 hours.

The site has had problems with corrosion of the ammonia storage tank and ammonia injection system. The ammonia storage tank originally was a PVC tank designed for 20° C maximum ambient temperature. The actual ambient temperature during the summer reaches 30° C, therefore, the PVC tank was replaced with a stainless steel tank.

The SCR unit was not in operation at the time of the visit due to computer problems, therefore, no actual operating conditions were obtained.

Permit Conditions

The NO_x emission limit required by the TA Luft is 500 mg/m^3 (about 266 ppmv) at 5 percent oxygen (refer to Appendix H for unit conversion factors). The governmental compliance test was conducted on June 5, 1987.

SCR System Costs

The capital cost of the entire SCR system, including ammonia storage tanks, was 600,000 DM (current exchange rate is about 1.5 DM to a dollar) in 1986. The Steuler guarantee was for two years of operation.

TRIP REPORT

I. PURPOSE

The U.S. Environmental Protection Agency (EPA) is gathering information to provide State and local agencies with information on NO_x control technologies for stationary industrial combustion sources. The objective of the European field trips is to collect design, operating history, and cost information from state-of-art NO_x control sites.

II. PLACE AND DATE

MAN Technologie AG
Augsburg, West Germany
November 17, 1989

III. SITE CONTACT

Herr Albert Jost, MAN Technologie

IV. DISCUSSION

The MAN Technologie facility was visited by Radian Corporation to gather information on the NO_x control systems applied to engines they manufacture. Facility personnel provided a summary of their recent NO_x control experience.

Background

MAN is a major European manufacturer of IC engines. Over the last several (2-3) years, they have installed the following engine NO_x control systems:

Number of Engine (Approximate)	Fuel	Size Range, MW_e	NO_x Control
150	Gas	0.1 - 0.4	Three-Way Catalyst
100	Gas	0.1 - 0.3	Lean Burn
11	Dual Fuel (6 - 9% Diesel)	1.0 - 1.4	SCR

SCR System Design

The MAN diesel engines equipped with SCR systems are at three different locations. The first, near Regansburg in Bavaria, consists of four IC engines. They were installed before the more stringent TA Luft requirements were enacted. These units operate below a limit of 800 mg/m^3 at 5 percent O_2, with the engine exhaust typically running at about 2,500 mg/m^3 at 5 percent O_2 (see Appendix H for unit conversion factors). They are dual fuel units which operate primarily on natural gas, with 6 percent of the heat input from diesel oil, as pilot fuel. These units are not designed for diesel oil only operation (9 percent diesel oil for pilot fuel is the normal amount for dual fuel engines designed to have oil-only capability).

These initial SCR units were designed with a lower 6 percent oil split to minimize potential impacts of oil firing on the catalyst. The four dual fuel engines have each been in operation for 12,000+ hours. (Normal operating hours for combined heat and power installations are on the order of 4,000 - 6,000 hours/year.) No major problems occurred during the first 10,000 hours; the plant had to clean the catalyst but it was not a major problem. Engine exhaust temperatures are on the order of 520°C, with the SCR catalyst typically operating at 350 - 380°C depending on the catalyst type, with temperature regulation.

The second MAN engine SCR site in operation is near Frankfurt. These 5 engines operate on a 9 percent oil dual fuel split, with diesel oil-only capability in emergency/back-up situations. These five units each have approximately 2,000 hours of dual fuel operation. They have no extensive experience on diesel only operation. The emission limit is 500 mg/m^3 at 5 percent O_2.

The last two MAN engines equipped with SCR systems are under construction at a third site and have no operating experience yet.

TRIP REPORT

I. PURPOSE

The U.S. Environmental Protection Agency (EPA) is gathering information to provide State and local agencies with information on NO_x control technologies for stationary industrial combustion sources. The objective of the European field trips is to collect design, operating history, and cost information from state-of-art NO_x control sites.

II. PLACE AND DATE

Peissenberger Kraftwerksgesellschaft GmbH
Bergwerkstrasse 14
8123 Peissenberg, West Germany
November 15, 1989

III. SITE CONTACTS

Walter Manhart, Peissenberger Kraftwerksgesellschaft
Hans Wagner, Steuler Industriewerke
Elkie Scheyer, Steuler Industriewerke

IV. DISCUSSION

Background

The Peissenberg facility consists of a 6 MW two-cycle IC engine cogeneration facility to supply heat and electricity to industrial and residential consumers within a one kilometer radius. The Peissenberg site fires dual fuel (94% natural gas combined with 6% No. 2 fuel oil) as the primary fuel source, with No. 2 fuel oil as a secondary fuel during natural gas curtailment. The engine is equipped with a zeolite catalyst SCR system manufactured by Steuler International for NO_x control. The Peissenberg unit started up in December 1987.

SCR System Design

The SCR system is designed and guaranteed to meet 500 mg/m^3 NO_x concentration at 5 percent oxygen in either dual- or oil-fired mode of operation. Inlet NO_x concentration is 2000-2400 mg/m^3 in dual fuel operation and 5000-6000 mg/m^3 in diesel fuel operation at 5 percent oxygen (see Appendix H for unit conversion factors). Therefore, the NO_x reduction efficiency is 80 to 85 percent for

dual fuel-firing and greater than 85 percent reduction for oil-firing. The SCR system is guaranteed for 20,000 hours operation or three years, whichever is less.

The SCR catalyst volume is 8 m^3 and is manufactured in a honeycomb structure. The catalyst bed presently consists of five layers, 300 mm per layer, for a total depth of 1.5 m. Pressure drop across the catalyst bed is about 85 mm. w.g. The catalyst reactor is located upstream of the waste heat boiler. The flue gas temperature ranges between 480° and 520° C. The ammonia injection system is shut down if the exhaust temperature reaches 525° C. At the upper 520° C operation temperature, about 5-8 percent of the ammonia that is injected is oxidized to form additional NO_x.

Ammonia injection rates are 50-65 l/hr for dual fuel-firing and 230-150 l/hr for diesel fuel-firing. Aqueous ammonia is used in the Peissenberg SCR system, and is stored in a 60 m^3 underground tank. The ammonia injection grid is located about 2 to 2.5 m. upstream of the SCR catalyst. A 90° bend in the ductwork is located about 1 m. from the catalyst reactor. The design flue gas flow rate reaching the SCR catalyst is about 32,000 m^3/hr; however, the actual flue gas flow rate is 35,000-36000 m^3/hr. NO_x content is only measured in the SCR outlet stream, no measurement of inlet NO_x is performed.

SCR Operating History

Since start-up in December 1987, the SCR unit has been in operation 9293 hours (as of November 1989). Diesel fuel operation accounts for only around 1000 hours of the total operation. Initially, four layers of catalyst were installed by Steuler in the reactor housing. However, the SCR system could not achieve the 500 mg/m^3 NO_x outlet guarantee with four catalyst layers. Therefore, a fifth catalyst layer was added to meet the guarantee. This incident of under-sizing the catalyst bed was claimed to be due to the discrepancy between design and actual flue gas flow rates.

No change in ammonia consumption or outlet NO_x concentration has been experienced since the fifth layer of catalyst was added. The catalyst has not been replaced at the Peissenberg site since start-up. The catalyst is claimed to be resistant to poisoning by impurities present in the diesel fuel which are poisons to base metal catalysts. The only compound known to poison zeolite catalysts is fluoride, which destroys ceramics.

Permit Conditions

The NO_x concentration limit required by the TA Luft is 1000 mg/m^3 at 5 percent oxygen. This limit is much less stringent than the 500 mg/m^3 Steuler guarantee. The TA Luft requires hourly, daily, and monthly NO_x emission averages to be recorded. Additionally, a stack test for compliance is required every three years by the TA Luft. The initial compliance test was conducted about six months after start-up, following addition of the fifth catalyst layer by Steuler.

Sulfur content of the No. 2 fuel oil fired at Peissenberg is 0.5 weight percent, maximum.

SCR System Costs

The total installed capital investment for the entire cogeneration plant was 11 million DM (current exchange rate is about 1.5 DM to a dollar) in 1987. The SCR catalyst system accounted for 800,000 DM of the total capital investment.

Cost of ammonia is 0.23 DM/kg supplied to Peissenberg.

TRIP REPORT

I. PURPOSE

The U.S. Environmental Protection Agency (EPA) is gathering information to provide State and local agencies with information on NO_x control technologies for stationary industrial combustion sources. The objective of the European field trips is to collect design, operating history, and cost information from state-of-art NO_x control sites.

II. PLACE AND DATE

Stadtwerke Dreieich
Dreieich, West Germany
November 16, 1989

III. SITE CONTACT

Herr Heinz-Dieter Karstens, Stadtwerke Dreieich

IV. DISCUSSION

The Stadtwerke Dreieich facility was visited by Radian Corporation to gather information on the facility's SCR system for NO_x control. Facility personnel provided SCR design and operating history information, as well as a power plant tour within the facility.

Background

Stadtwerke Dreieich operates an approximately 2 MW_e cogeneration plant consisting of five natural gas IC engines, and two standby boilers used for peaking service. Each of the IC engines is rated at 155 kW_e each. NO_x emissions are controlled by individual SCR (ceramic molecular sieve catalysts) systems on each engine.

SCR System Design

The Steuler SCR catalyst for each IC engine is installed upstream of the waste heat boiler. The exhaust gas temperature for each unit normally operates between 450 and 500°C. The units operate on natural gas fuel only.

The emission standards for oil and gas are 500 ppm; however, the local regulatory agency has required these units to meet a 250 ppm limit at 12 percent O_2 (see Appendix H for unit conversion factors).

Each SCR catalyst system consists of 27 catalyst blocks per engine. There are 3 layers of catalyst, each consisting of 9 blocks in a 3 x 3 arrangement. The overall dimensions of the catalyst housing are approximately 0.7 m x 0.7 m x 0.7 m.

Operating History

The IC engine/SCR units were started in 1986. There have been no catalyst additions or change outs. The catalysts were cleaned once in 1987; they were inspected again in 1988 and showed no visible signs of dirt.

The operating history for the engines is as follows:

Unit	Operating Hours	Number of Starts
1	17,400	13,000
2	17,400	8,000
3	17,400	12,390
4	14,100	11,000
5	14,100	12,200

At 155-160 kW, the NH_3 consumption for Unit 1 is 2.2 liters/hr, Unit 2 is 2.0 liters/hr, and Units 3-5 are 1.8 liters/hr.

The units are tested by TA Luft once every two years. The last test conducted showed an outlet NO_x emission level for this facility of 187 ppm.

TRIP REPORT

I. PURPOSE

The U.S. Environmental Protection Agency (EPA) is gathering information to provide State and local agencies with information on NO_X control technologies for stationary industrial combustion sources. The objective of the European field trips is to collect design, operating history, and cost information from state-of-art NO_X control sites.

II. PLACE AND DATE:

Stadtwerke Norderstedt
Heidbergstrasse 101-111
2000 Norderstedt, West Germany
November 7, 1989

III. SITE CONTACT

Herr Groth, Stadtwerke Norderstedt

IV. DISCUSSION

The Stadtwerke Norderstedt facility was visited by Radian Corporation to gather information on the facility's SCR system for NO_X control. Facility personnel provided SCR design and operating history information, as well as a power plant tour within the facility.

Background

Stadtwerke Nordestadt operates a 2 MW cogeneration plant consisting of six natural gas-fired 2-cycle IC engines. The engines supply hot water for residential heating and electrical power servicing a 3 kilometer radius area. The six engines, manufactured by Jenbacher Werke A.G., are 500 kW each. NO_X emissions from the engines are controlled by individual SCR systems (six total SCR catalysts). The SCR systems were retrofitted to the existing engines in September 1985, before which time the engines had been operating uncontrolled for about 6,000 hours. The SCR systems were in commercial operation by the end of 1985. The Stadtwerke Nordestadt site was one of the first Steuler SCR sites.

SCR System Design

The SCR catalyst for each IC engine is installed upstream of the waste heat boiler. The exhaust gas temperature from each engine is between 430° C and 450° C. The engine exhaust actual flow rate is

4,500 m^3/hr; however, the SCR system for each engine was designed for an exhaust rate of only 3,900 m^3/hr. The original catalyst was an aluminum oxide formulation.

The NO_x concentration in the exhaust gas from the engine is about 1,300 ppmv at 12.5 percent oxygen, which is equivalent to 4,000 mg/m^3 at 5 percent oxygen (see Appendix H for unit conversion factors). The SCR system is designed to reduce NO_x emissions to meet 800 mg/m^3 at 5 percent oxygen, which represents an 80 percent NO_x reduction efficiency. The manufacturers's guarantee on SCR performance is one year after commissioning.

Each SCR catalyst bed presently consists of 144 blocks which are 150 mm x 150 mm x 150 mm each. Each catalyst bed presently has 4 layers of catalyst. The overall dimensions of the SCR catalyst housing is 1.5 m x 1.5 m x 1.5 m, with ammonia injection occurring about 1 m upstream of the catalyst. The pressure drop across the catalyst bed is 70 mm w.g.

SCR Operating History

Since the SCR system was retrofit into the existing power plant, space limitations dictated some of the design aspects of the SCR system. The original SCR ducting design included two 90 degree bends upstream of the catalyst, which caused poor flow distribution. The ducting was changed to two 45 degree bends to help improve the flow characteristics. Vibration from the engines caused initial cracks in the catalyst housing and ductwork.

In the first two years of operation, the reliability of the SCR system was very poor, causing repeated shutdowns for repairs. In November 1986, the catalyst was replaced with a titanium-based formulation due to catalyst performance decline. At this time, the spent aluminum oxide catalyst had no visible damage or coating. In addition, an extra catalyst layer was added during the catalyst replacement (the original catalyst bed had only three layers). Three months following catalyst replacement, the new catalyst performance began a gradual decline. The ammonia flow rate required to achieve 800 mg/m^3 outlet NO_x (at 5 percent O_2) had increased from 8 l/hr to 14 l/hr by six months after replacement. Steuler cleaned the catalyst in mid-1987 via dipping the catalyst blocks in a liquid cleaning solution. No further replacement or reactivation has occurred since that time. After cleaning, the ammonia injection rate has been at the design 8-9 l/hr until around August 1989. Since August 1989, the ammonia injection rate has steadily increased and is presently at 13 l/hr, as of November 1989.

Other problems which have occurred include ammonia corrosion of copper instrumentation fittings, seals, and gaskets and NO_x monitors failing after 1,500 hours of operation. Steuler supplies the NO_x analyzer system which consists of two analyzers for the six SCR units (each analyzer monitors three engines).

The actual operation of each engine and the number of starts, as of November 1989, is as follows:

Engine	Hours of Operation	Number of Starts
1	16,423	7,545
2	15,375	5,825
3	15,741	5,985
4	15,803	5,339
5	15,698	5,783
6	15,813	3,929

The SCR system was installed on each engine after about 6,000 hours operation and 2,500 starts.

Herr Groth speculated that ash and lubricating oil may potentially be the reason for catalyst deactivity. However, the boiler tubes (entirely downstream of the SCR) are not fouled as rapidly since SCR has been installed.

Permit Conditions

The NO_x emission limit required by the TA Luft is 800 mg/m^3 (about 425 ppmv) at 5 percent oxygen. This NO_x concentration is around 238 ppmv corrected for an actual concentration of 12 percent oxygen. In the future, the control of CO emissions via catalytic oxidation will be required. CO emissions are presently 465 ppm at 12 percent O_2.

SCR System Costs

The capital cost of the initial SCR system, including ammonia tanks, NO_x monitors, instrumentation, etc., was 1 million DM (current exchange rate is about 1.5 DM to a dollar) in 1985. Replacement catalyst is 180 DM per 150 mm x 150 mm x 150 x mm block. The NO_x monitors cost 1,000 DM per monitor to replace. The SCR system was procured by Energie Beratung Wolff, Munich (089-785-3225).

TRIP REPORT

I. PURPOSE

The U.S. Environmental Protection Agency (EPA) is gathering information to provide State and local agencies with information on NO_x control technologies for stationary industrial combustion sources. The objective of the European field trips is to collect design, operating history, and cost information from state-of-art NO_x control sites.

II. PLACE AND DATE

Universitat Technique
Eisendorferstrasse 40
2100 Hamburg - Harburg 20, West Germany
November 6, 1989

III. SITE CONTACTS

Dr. Schiff, Universitat Technique
Herr Jungk, Universitat Technique
Herr Thramer, Universitat Technique

IV. DISCUSSION

The Universitat Technique facility was visited by Radian Corporation to gather information on the facility's SCR system for NO_x control. Facility personnel provided SCR design and operating history information, as well as a power plant tour within the facility.

Background

The Universitat Technique in Hamburg - Harburg operates a cogeneration system consisting of four natural gas-fired 2-cycle IC engines. The engines supply hot water for heating the University buildings in addition to providing the University's electrical needs, with the capability to purchase and sell excess electricity to/from the grid. The engines are operated according to the heating demand and peak electrical needs. Most or all of the engines are shutdown at night. The engines are all Jenbacher Werke AG (Tirol, Austria) models, two of which are 8-cylinder 700 kW each, and the other two are 6-cylinder 500 kW engines. A zeolite catalyst SCR system manufactured by Steuler International for controlling NO_x emissions is employed.

SCR System Design

The combined exhaust from the four engines is ducted directly to the single SCR catalyst system without cooling. The maximum design exhaust temperature is 420°C. The minimum exhaust gas temperature, below which ammonia injection is halted, is 350°C. During an engine cold start, approximately 20 to 30 minutes is required to reach the minimum 350°C, before ammonia is injected.

The NO_X concentration at the inlet of the SCR system ranges between 800 and 900 ppmv actual concentration. Normally, the oxygen content of the flue gas stream is around 10 percent. The SCR system is designed to reduce NO_X to around 120 ppmv actual concentration, which represents 85-87 percent NO_X removal.

The SCR catalyst itself is a monolith type which is supplied in 200 mm x 200 mm x 200 mm cubes. The present dimensions of the entire catalyst bed are 1.1 m x 2.2 m x 1.6 m. There are presently six layers of catalyst.

SCR Operating History

Originally, Steuler International installed four layers of catalyst; however, an additional two layers of catalyst were added because the performance guarantee was not met. The Steuler guarantee was specified as 125 ppmv outlet NO_X using a maximum ammonia flow of 10 l/hr (25 percent aqueous ammonia). With the original four catalyst layers, the required ammonia injection rate was 20 l/hr to achieve 125 ppmv outlet NO_X, which did not meet the performance guarantee. The additional two catalyst layers were added after six months of operation. During the six month initial period before adding extra catalyst, the ammonia injection point was moved further upstream to enhance mixing, however, the system performance did not improve significantly. After the catalyst addition, the ammonia flow rates are around 10 l/hr for the 700 kW engines and 7 l/hr for the 500 kW engines. The ammonia injection pressure is 2.5 bar.

The SCR system has been in commercial operation for about two years as of November 1989. The system is operated at around 2,000 hours per year. The actual operation for each engine and the number of starts, as of November 1989, is as follows:

Unit	Output, KW	Hours of Operation	Number of Starts
1	700	2130	1919
2	500	2100	982
3	700	2063	1187
4	500	1946	1960

TABLE F-1. SCR SITES FOR COMBUSTION TURBINES

Site	Size	Fuel	Start-up	NO_x Inlet	NO_x Outlet
Japan National Railway/ Kawasaki	141 MW	Kerosene	1981	60 - 80	10
Sumotono/Shirakawa	3 MW	Kerosene	1984	100	25

TABLE F-2. SCR SITES FOR STATIONARY INTERNAL COMBUSTION ENGINES

Site	Size	Fuel	Start-up	NO_x Inlet	NO_x Outlet
Mitsubishi Petrochemical/ Yokkaichi	-	Oil	1980	900	90
Unitika/Uji	-	Oil	1978	1000	150
Monshu Paper/Oita	-	Oil	1989	-	-

TABLE F-3. INDUSTRIAL BOILERS FITTED WITH SCR FOR DIRTY FUELS

Site	Location	Fuel	Start-up Year	NO_x, ppm Inlet	Outlet
Shindaikyowa Petrochemical/	Yokkaichi	Oil	1975*	250	25
Nippon Yakin	Kawasaki	Oil	1976*		
Nisshin Steel	Amagasaki	Oil	1977	300	30
Kansai Paint	Amagasaki	Oil	1978	300	30
Kansai Oil	Sakai	Oil	1979	250	25
Shindaikyow Petrochemical	Yokkaichi	Oil	1985	250	50
Ube Industries	Sakai	Oil	1989	250	50
Daishowa Paper	Yoshinaga	Oil	1989		
Fuji Oil	Chiba	Pitch	1983	500	50
Shinnihon Chemical Industry	Onahama	Oil Coke	1984	600	60
Somitomo Chemical	Chiba	Oil Coke	1985	500	50
Ube Industries	Ube	Coal	1982	400	250
Takeda Medicine	Nikari	Coal	1986	400	80
Idemitsu Kosan	Aichi	Coal	1986	260	60

*Shut Down

TABLE F-4. WASTE SLUDGE INCINERATORS FITTED WITH SCR

Plant Name	City	Inlet, ppm NO_x	NO_x Removal %	Start-up Date
Sunamachi	Tokyo	100	90	1979[a]
Nanbu No. 1	Tokyo	100	90	1983
Nanbu No. 2	Tokyo	100	90	1983
Kasai	Tokyo	100	90	1983
Hirano	Osaka	130	90	1983
Hoshutsu	Osaka	130	90	1983
Shingashi	Tokyo	100	90	1983
Shingashi	Tokyo	100	90	1983
Senda	Hiroshima	130	90	1983
Sunamachi	Tokyo	100	90	1984
Kosuge	Tokyo	400[b]	90	1985
Tsumori	Osaka	150	90	1985
Konan	Biwako	135	90	1985
Hojin	Nagoya	130	80	1986

[a] Catalyst was replaced in 1985, after 6 years operation.
[b] NO_x is high because of the use of fluidized bed incinerator, while other incinerators are multi-stage type.

APPENDIX G

PARTIAL VENDOR LISTING

	Page
Selective Catalytic Reduction	G-2
Non-Selective Catalytic Reduction	G-4
Selective Non-Catalytic Reduction	G-5
Combustion Turbines	G-6
Engines	G-7
Process Heaters	G-8
Low-NO_x Burners	G-9

SELECTIVE CATALYTIC REDUCTION
VENDOR LISTING

Company	Contact Name	Phone No.
B&W Hitachi America 20 S. Van Buren Avenue P.O. Box 351 Barberton, OH 44203	Ed Campobenedetto	216-860-6762
Camet/WR Grace 12000 Winrock Rd. Hiram, OH 44234	Alan Thomas Carmo Pereira Ed Smith	301-659-9111 301-534-4335 215-887-0911
Cormetech, Inc. (Mitsubishi/Corning) Environmental Technologies 8 East Denison Pkw. Corning, NY 14831	Reda Iskandar	607-974-4313
Engelhard Corporation Menlo Park, CN-28 Edison, NJ 08818	Ken Burns John Byrne	201-632-6640 201-321-5153
F W Energy Applications, Inc. (IHI) (A Foster Wheeler Company) 8 Peach Tree Hill Rd. Livingston, NJ 07039	Jack Polcer Bhuban Agarwal	201-535-2271 201-535-2372
Hitachi Zosen 150 E 52nd St. New York, NY 10022	Andi Akita	212-355-5650
Johnson Matthey Catalytic Systems Division 436 Devon Park Dr. Wayne, PA 19807	John Kamerosky Paul White	215-341-8505 215-341-8544
Joy Technologies, Inc. (Kawasaki) 404 East Huntington Drive Monrovia, CA 91016	Bert Brown Ted Behrens	818-301-1100 818-301-1215
MHI/Combustion Engineering Houston, TX	Rick Martinez	713-652-9230
Nippon Shokubai 101 East 52nd Street (14th floor) New York, NY 10022	Yojiro Takahashi	212-838-5258

(continued)

(CONTINUED)

Company	Contact Name	Phone No.
Nitrogen Nergas Corp. P.O. Box 51932 Lafayette, LA 70505	Werner Henke	318-232-2142
Norton Chemical Process Products P.O. Box 350 Akron, OH 44309	Steve Turner	216-673-5860
Steuler International Corporation Farmington Road P.O. Box 38 Mertztown, PA 19539	Manfred Grove	215-682-7171

NON-SELECTIVE CATALYTIC REDUCTION
VENDOR LISTING

Company	Contact Name	Phone No.
Engelhard Corporation Menlo Park, CN-28 Edison, NJ 08818	Ken Burns	201-632-6640
Nitrogen Nergas Corp. P.O. Box 51932 Lafayette, LA 70505	Werner Henke	318-232-2142

SELECTIVE NON-CATALYTIC REDUCTION
VENDOR LISTING

Company	Contact Name	Phone No.
Exxon Research and Engineering P.O. Box 101 Florham Park, NY 07932	Donald E. Shaneberger Don Krider	201-765-1307/2339
Fuel Tech 61 Taylor Reed Place Stanford, CT 06906	Bryan Luftglass	203-323-8401

COMBUSTION TURBINE MANUFACTURER LISTING

Company	Contact Name	Phone No.
Allison Gas Turbine Division P.O. Box 420 Indianapolis, IN 46206	Peter J. Hart	317-230-4106
Asea Brown Boveri 1460 Livingston Avenue North Brunswick, NJ 08902	Septimus Van der Linden	201-932-6319
General Electric Company 1 River Road Schenectady, NY 12345	Marvin Schorr Charles Steber Douglas Todd	518-385-3036 518-385-9670 518-385-3791
General Electric Company One Neumann Way MD N156 Cincinnati, OH 45215-6301	Ed D. Saller	512-552-5432
KWU/Siemens	Jim Thompson	813-723-4350
Solar Turbines Incorporated 9250 Skypark Court San Diego, CA 92123	Gerald Napierala Roger L. Swingle	619-694-6512 619-544-5778
United Technologies Turbo Power 308 Farmington Avenue Farmington, CT 06302	William H. Day	203-677-3419

ENGINE MANUFACTURER LISTING

Company	Contact Name	Phone No.
Catepillar, Inc. 100 NE Adams St. Peoria, IL 61629-6480	Don Dowdall	309-675-5362
Cooper Bessemer 150 Lincoln Ave. Grove City, PA 16127	Joe Taucher	412-458-8000 Ext. 4124
Cooper Ajax/Superior Division Springfileld, OH	Bruce Chrismann	513-327-4200
Cummins Engine Company, Inc. P.O. Box 3005 Columbus, IN 47202	Hugh Daugherty	812-377-3263
Fairbanks Morse Engine Divis 701 Lawton Ave. Beloit, WI 53511	Paul Danyluk	608-364-8228
Waukesha 1000-T St. Paul Ave. Waukesha, WI 53188	Paul Cannestra	414-547-3311

PROCESS HEATER MANUFACTURER LISTING

Company	Contact Name	Phone No.
Foster Wheeler Corporation Fired Heater Division 8 Peachtree Hill Rd. Livingston, NJ 07039	Larry Mac Evory	201-535-2297
John Zink 4401 S. Peoria Tulsa, OK 74105	Bill Johnson	918-747-1371
Lummus Crest 1515 Broad St. Bloomfield, NJ 07003	Tom Gronauer	201-893-2823

LOW-NO_x BURNER MANUFACTURER LISTING

Company	Contact Name	Phone No.
ABB Combustion Engineering Systems 1000 Prospect Hill Road Windsor, CT 06095	Mike McCartney Richard C. LaFlesh John Marian	203-285-4677 203-285-2583 203-285-4539
Alzeta Corporation 2343 Calle Del Mundo Santa Clara, CA 95054	Wayne Krill	408-727-8282
Babcock & Wilcox 20 S. Van Buren Avenue Barberton, OH 44203	Paul Cioffi Al Larue	216-753-4511
Cleaver-Brooks Milwaukee, WI	Doug McDonald	414-962-0100
Coen Company, Inc. 1510 Rollins Road Burlingame, CA 94010	Jim White Jon Backland Chet Binasik Wayne Wieszczyk	415-697-0440
Foster Wheeler Energy Corporation Perryville Corporate Park Clinton, NJ 08809	Joel Vatsky	201-730-5450
John Zink Company P.O. Box 702220 Tulsa, OK 74170	Richatd T. Waibel Roger Moble	918-748-5105 918-747-1371
Keeler Dorr-Oliver 77 Havemeyer Lange Stamford, CT 06904	Richard A. Giberti Robert Kelly	203-358-3500 717-326-3361
Process Combustion Corporation P.O. Box 12866 Pittsburg, PA 15241	Peter B. Nutcher	412-655-0955
Riley Stoker Corporation 9 Neponset Street Worchester, Massachusetts	John J. Marshall Robert A. Lisauskas David A. Harris	508-792-4826 508-792-4802 508-852-7100
Zum Industries 1422 East Avenue Erie, PA 16503	Roy Caldwell Frank D. Vona	814-452-6421

APPENDIX H

CONVERSION FACTORS

CONVERSION FACTORS

[Standard conditions are 77°F (25°C) and 1 atm.]

$$NO_x\ (ppm\ at\ 15\%O_2) = NO_x\ (ppm\ at\ x\%\ O_2)\left(\frac{20.9-15}{20.9\ -\ x}\right)$$

$$NO_x\ (lb/MMBtu) = NO_x\ (ppm\ at\ x\%\ O_2)\left(\frac{20.9}{20.9\ -\ x}\right) F_D\ x\ 1.17\ x\ 10^{-7}$$

$$NO_x\ (ppm\ at\ x\%\ O_2) = NO_x\ (mg/m^3\ at\ x\%\ O_2)\left(\frac{1}{46}\right) x\ (22.4)\ x\left(\frac{298}{273}\right)$$

$$NO_x\ (ppm\ at\ 15\%\ O_2) = NO_x\ (g/bhp\text{-}hr)\left(\frac{10^6}{46}\right) / \left[\left(\frac{16.6\ +\ 3.29\ Z}{12.0\ +\ Z}\right) BSFC\right]$$

where:

F_D for natural gas	= 8,740 dscf/MMBtu at standard conditions
F_D for oil	= 9,220 dscf/MMBtu at standard conditions
F_D for wood	= 9,280 dscf/MMBtu at standard conditions
F_D for coal	= 9,820 - 10,140 dscf/MMBtu at standard conditions (depending on coal type)
Z	= hydrogen/carbon ratio of the fuel
Z for natural gas	= 3.5
Z for diesel	= 1.8
BSFC	= brake specific fuel consumption, g/hp-hr
BSFC average	= 7,276 Btu/hp-hr which represents engine efficiency of 35 percent for all engines. Use lower heating value (LHV) of fuel to convert to g/hp-hr: LHV (gas) = 20,000 Btu/lb; LHV (diesel) = 18,320 Btu/lb (see Reference 6 for details).

TECHNICAL REPORT DATA
(Please read Instructions on the reverse before completing)

1. REPORT NO. EPA-600/2-91-029	2.	3. RECIPIENT'S ACCESSION NO.
4. TITLE AND SUBTITLE Sourcebook: NOx Control Technology Data		5. REPORT DATE July 1991
		6. PERFORMING ORGANIZATION CODE
7. AUTHOR(S) Lisa M. Campbell, Diana K. Stone, and Gunseli S. Shareef		8. PERFORMING ORGANIZATION REPORT NO.
9. PERFORMING ORGANIZATION NAME AND ADDRESS Radian Corporation 3200 E. Chapel Hill Road/Nelson Highway Research Triangle Park, North Carolina 27709		10. PROGRAM ELEMENT NO.
		11. CONTRACT/GRANT NO. 68-02-4286, Tasks 92, 102, and 117
12. SPONSORING AGENCY NAME AND ADDRESS EPA, Office of Research and Development Air and Energy Engineering Research Laboratory Research Triangle Park, North Carolina 27711		13. TYPE OF REPORT AND PERIOD COVERED Task Final;
		14. SPONSORING AGENCY CODE EPA/600/13

15. SUPPLEMENTARY NOTES AEERL project officer is Charles B. Sedman, Mail Drop 4, 919/541-7700.

16. ABSTRACT

The report, a compilation of available information on the control of nitrogen oxide (NOx) emissions from stationary sources, is provided to assist new source permitting activities by regulatory agencies. The sources covered are combustion turbines, internal combustion engines, non-utility boilers and heaters, and waste incinerators. The report discusses the background of NOx formation in the combustion process and major NOx sources, and describes processes for NOx control. The current status of NOx control technology is discussed, and applications to meet permitting requirements are detailed. Permitted NOx emission levels are summarized by combustion source, fuel type, and control technology. Documentation includes references and contacts for further information.

17. KEY WORDS AND DOCUMENT ANALYSIS

a. DESCRIPTORS		b. IDENTIFIERS/OPEN ENDED TERMS	c. COSATI Field/Group
Pollution	Heating Equipment	Pollution Control	13B
Nitrogen Oxides	Incinerators	Stationary Sources	07B 13B
Combustion		Waste Incinerators	21B
Gas Turbines			13G
Internal Combustion Engines			21K
Boilers			13A

18. DISTRIBUTION STATEMENT Release to Public	19. SECURITY CLASS *(This Report)* Unclassified	21. NO. OF PAGES 168
	20. SECURITY CLASS *(This page)* Unclassified	22. PRICE

EPA Form 2220-1 (9-73)