ENTROPY
ENVIRONMENTALISTS INC.

POST OFFICE BOX 12291
RESEARCH TRIANGLE PARK
NORTH CAROLINA 27709-2291
919-781-3550

EMISSIONS TESTING

RECIPROCATING COMPRESSOR AND
STATIONARY GAS TURBINE

COLUMBIA GULF TRANSMISSION COMPANY

RAYNE, LOUISIANA

MARCH 1992

EEI 20137

Permit # 2064
Acadia

SOURCE TEST REPORT REVIEW FORM

PLANT Columbia Gulf

SOURCE ID NO. Turbine/Compressor, Rayne 1010 1002

DATE ~~REPORT RECEIVED~~ test 3/17-18/92

RECEIVED FROM

REVIEWER DJS

DATE REVIEWED

Meeting on June 2, 1992: Columbia Gulf will ask for permit mod.

REPORT CONTENTS

	YES	NO	OK	REMARKS
A. Cover				
1. Plant name and location	X			
2. Source sampled	X			
3. Testing company or agency	X			
B. Certification				
1. Certification by team leader	X			
2. Certification by reviewer (e.g. a P.E.	X			
3. Certification by owner, or facility management		X		
C. Table of Contents	✓			
D. Introduction				
1. Test purpose		X		
2. Test location, type of process	✓			
3. Test dates	✓			
4. Pollutants tested	✓			
5. Observers' names (industry and DEQ)	✓			
6. Any other important background information		X		
E. Summary of Results				
1. Emission results	X			
2. Process data, regarding determination of compliance	X			
3. Allowable emissions	X			
4. Visible emission summary		X	X	
5. Discussion of errors, both real and apparent		X	X	
F. Conclusions and Recommendations				
1. Is the test conclusive?		X		
2. Were the objectives met?		X		
3. Status re regulatory requirements		X		
4. Recommendations for future actions		X		

F A Decker III
Dir, Env Aff-Ops
Columbia Gas Xms Co
PO Box 1273
Charleston WV 25325

Figure 6.1

RE Culp VP
Columbia Gulf Xsn Co,
2603 Augusta
Houston, TX 77057

~~Charlie Ochello, Env Dir~~

SOURCE TEST REPORT REVIEW FORM (continued)

REPORT CONTENTS

	YES	NO	OK	REMARKS
G. Source Operation				
1. Description of process and control devices	X	—	—	
2. Flow diagram	X	—	—	
3. Process data and results, with example calculations	X	—	—	
4. Representativeness of raw materials and products	X	—	—	
5. Any specially required operation demonstrated	—	—	—	
6. Control equipment description	—	X	X	
7. Control equipment operating status	—	X	X	
H. Sampling and Analytical Procedures				
1. Sampling port location and dimensioned cross section	X	—	—	
2. Sampling point description, including labeling system	X	—	—	
3. Sampling train description	X	—	—	
4. Description of sampling procedures that deviated from standard methods	—	—	—	
5. Description of analytical procedures that deviated from standard methods	—	—	—	
I. Documentation Appendix				
1. Complete results with sample calculations	X	—	—	
2. Raw field data (original, not computer printouts)	X	—	—	
3. Laboratory report, with chain of custody	—	X	X	
4. Raw production data, signed by a plant official	X	—	—	Not signed
5. Test Log	X	—	—	
6. Calibration procedures and results	X	—	—	
7. Project participants and titles	X	—	—	No titles
8. Related correspondance	—	—	—	
9. Pretest Agreements	—	—	—	

Figure 6.2

SOURCE TEST REPORT REVIEW FORM (continued)

REPORT COMMENTS

Review Comments

Were calculations validated_____yes _____no

If yes, were any results greater than normal round off errors_____yes _____no

Were any sampling or analytical procedures unacceptable _____yes _____no

Were any procss or control equipment operations unacceptable _____yes _____no

List any unacceptable items_____

_____

_____

Were any additional items requested from the source or tester after the report was reviewed_____yes _____no

List items and reason for request_____

_____

_____

This report is _____ acceptable, _____unacceptable

Give reasons for unacceptability _____

_____

_____

Comments reviewed by_____ Date_____

Figure 6.3

EMISSIONS TESTING

RECIPROCATING COMPRESSOR AND
STATIONARY GAS TURBINE

COLUMBIA GULF TRANSMISSION COMPANY

RAYNE, LOUISIANA

MARCH 1992

EEI 20137

Prepared by:

CEM Division
Entropy Environmentalists, Inc.
Research Triangle Park, North Carolina

Prepared for:

Columbia Gulf Transmission Company
Rayne, Louisiana

REPORT CERTIFICATION

The sampling and analysis performed for this report were carried out under my direction and supervision, and I hereby certify that the test report is authentic and accurate.

Date MAY 13, 1992 Signature Bill Harris

Bill Harris
CEM Division

I have reviewed the testing details and results in this report, and hereby certify that the test report is authentic and accurate to the best of my knowledge.

Date May 13, 1992 Signature

J. Ron Jernigan, P.E.
Director
CEM Division

NORTH CAROLINA PROFESSIONAL SEAL 8487 ENGINEER J. RON JERNIGAN

TABLE OF CONTENTS

1. Introduction..... 1

2. Summary of Results..... 2

3. Source Description and Operation..... 6

4. Test Equipment and Procedures..... 9
   4.1 Test Equipment..... 9
   4.2 Test Procedures.....14

Appendix A.
- EPA Methods 3A, 7E, and 10 Measurement Data Corrected for Calibration Drift and Calculated NO_x and CO Emission Rates
- Method 20 Calculation Worksheets
- Example Calculations

Appendix B. Test Data
- Uncorrected Computer-Recorded NO_x, CO, O_2, and CO_2 Reference Measurements
- Calibration Summaries

Appendix C. EPA Methods 1, 2, and Alternate Method 4 Volumetric Flowrate Measurement Data
- Source Test Calculations
- Air Flowrate Determinations
- Moisture Field Data Sheets

Appendix D. Reference Measurement System Calibration Bias and Drift Calculations

Appendix E. Reference Measurement System Performance Tests
- Response Time
- NO_2-to-NO Converter Efficiency
- Interference Test

Appendix F. Process Information
- Specific Humidity Data
- Process Data
- Fuel Gas Analysis Results

Appendix G. Equipment Calibration and Quality Assurance
- Calibration Gas Certificates of Analysis
- Pre- and Post-Test Meter Box Calibration

Appendix H. EPA Test Methods and Specifications
- EPA Methods 1, 2, 3A, 7E, 10, 19, 20, and Alternate Method 4
- Performance Specifications 2, 3 and 4
- Subpart GG

1. INTRODUCTION

The CEM Division of Entropy Environmentalists, Inc. was contracted by Columbia Gulf Transmission Company to perform emissions testing on a reciprocating compressor (1002) and a gas turbine (1010) installed at their Rayne Compressor Station in Rayne, Louisiana. EPA test methods were employed to accurately quantify the effluent emissions of oxygen (O_2), carbon dioxide (CO_2), nitrogen oxides (NO_x), and carbon monoxide (CO) from each source.

Bill Harris, Hal Lee, and Greg Blanschan of Entropy conducted the testing on March 17 and 18, 1992. The test program was coordinated by Mike Hoffman and Charles Ochello of Columbia Gulf Transmission Company. Dirk Kavanagh represented the Louisiana Department of Environmental Quality (DEQ) during the test.

This report presents the test data, test methods and equipment used, and data reduction and quality assurance procedures utilized during the emissions test program. Section 2 summarizes the test results. Section 3 briefly describes the reciprocating compressor and gas turbine units. The equipment and test procedures used during this test program are presented in Section 4. The appendices to this report contain the test data, example calculations, process information, quality assurance data, and copies of the applicable test methods and source regulations.

2. SUMMARY OF RESULTS

Tables 1 and 2 present a summary of the results of the emissions testing, the atmospheric data, and the engine operational data recorded during the individual test runs conducted on the reciprocating compressor and the gas turbine. Three one-hour emissions tests were performed on the reciprocating compressor and three 16-minute tests were performed on the gas turbine. Both units were operating at full load and firing natural gas during each test period.

The test results indicate that the NO_x emissions were below the permitted limit of 48.0 lb NO_x/hr for the compressor and 36.25 lb NO_x/hr for the gas turbine. The carbon monoxide (CO) results indicate that the measured emission rates were below the 6.2 lb CO/hr limit for the compressor, but exceeded the 13.75 lb CO/hr limit for the gas turbine.

The emission rates were computed on a mass per unit of time basis (lb/hr) for the reciprocating compressor using EPA Methods 1 and 2 and Alternate Method 4 volumetric flow rate data collected by Entropy personnel. However, the gas turbine exhaust duct sampling location did not meet EPA Method 1 criteria for upstream and downstream distances. At the request of the Louisiana DEQ, Entropy conducted a cyclonic flow test at the gas turbine sampling location to demonstrate the problem. As expected, turbulence was encountered due to the design of the exhaust duct and the location of the sample ports. The emission rates for the gas turbine were calculated using the natural gas fuel analysis and fuel flow rate data collected during the testing. ? Use Method 5D.

NO_x concentrations were also calculated at ISO conditions for the gas turbine. The formula typically used to calculate NO_x concentrations at ISO conditions could not be used in this case because a reference combustor inlet pressure value (P_{ref}) could not be obtained for this particular turbine. The

formula (shown at the bottom of Table 2), which includes barometric pressures in place of combustor inlet pressures, was used for the calculations.

TABLE 1.

SUMMARY OF RESULTS
RECIPROCATING COMPRESSOR EMISSIONS TESTING
COLUMBIA GULF TRANSMISSION COMPANY
RAYNE, LOUISIANA
MARCH 17, 1992

Test Run	1	2	3	AVG
Test Time Start	1315	1435	1555	--
Test Time Finish	1415	1535	1655	--
Atmospheric Data				
Barometric pressure (in. Hg)	29.9	29.8	29.8	--
Ambient temperature (°F)	73	74	71	--
Ambient wet-bulb temperature (°F)	67	67	67	--
Specific humidity (lb H_2O/lb dry air)	0.012548	0.012614	0.013426	--
Emissions Data				
O_2 ($\%_{vd}$)	15.49	15.52	15.60	15.54
CO_2 ($\%_{vd}$)	3.18	3.17	3.12	3.16
NO_x (ppm_{vd})	432.7	416.8	339.2	396.2
CO (ppm_{vd})	52.8	51.2	52.0	52.0
NO_x emission rate (lb/hr)	28.7	28.1	22.5	26.4
CO emission rate (lb/hr)	2.1	2.1	2.1	2.1
NO_x emission rate (lb/MBtu)	1.952	1.891	1.562	1.802
CO emission rate (lb/MBtu)	0.145	0.141	0.146	0.144
Compressor Operational Parameters				
Horsepower (Hp)	2035	2032	1982	--
Inlet air pressure (in. Hg)	5.0	5.0	5.0	--
Inlet air temperature (°F)	106	105	103	--
Engine speed (RPMS)	253	253	253	--
Ignition timing (° BTDC)	9	9	9	--
Fuel flow rate (MCFD)	390	390	390	--

NO_x permit limit: 48.0 lb NO_x/hr **CO permit limit:** 6.2 lb CO/hr

TABLE 2.

SUMMARY OF RESULTS
GAS TURBINE EMISSIONS TESTING
COLUMBIA GULF TRANSMISSION COMPANY
RAYNE, LOUISIANA
MARCH 18, 1992

Test Run	1	2	3	AVG
Test Time Start	1258	1324	1351	--
Test Time Finish	1314	1340	1407	--
Atmospheric Data				
Barometric pressure (in. Hg)	29.69	29.69	29.69	--
Ambient temperature (°F)	72	72	72	--
Ambient wet-bulb temperature (°F)	68	68	68	--
Specific humidity (lb H_2O/lb dry air)	0.013867	0.013867	0.013867	--
Emissions Data				
O_2 ($\%_{vd}$)	17.07	17.06	17.02	17.05
CO_2 ($\%_{vd}$)	2.28	2.30	2.31	2.30
NO_x (ppm_{vd})	36.2	36.3	36.2	36.2
CO (ppm_{vd})	120.9	119.8	119.2	120.0
NO_x @ 15% O_2 (ppm_{vd})	55.6	55.9	55.1	55.5
NO_x @ 15% O_2 ISO conditions (ppm_{vd})	63.7	64.1	63.2	63.7
NO_x emission rate (lb/hr)	31.76	31.77	31.35	31.63
CO emission rate (lb/hr)	64.50	63.75	62.77	63.67
NO_x emission rate (lb/MBtu)	0.203	0.203	0.201	0.202
CO emission rate (lb/MBtu)	0.413	0.408	0.402	0.408
Turbine Operational Parameters				
Compressor discharge pressure (psig)	127	127	127	--
Fuel pressure (psig)	591	592	592	--
Fuel temperature (°F)	62	63	63	--
Horsepower (Hp)	13141	12997	12990	--
Compression factor	1.092	1.092	1.092	--
Fuel flowrate (scfm) (uncorrected)	140,000	140,000	140,000	--
Fuel flowrate (scfm) (corrected)	152,880	152,880	152,880	--

NO_x permit limit: 36.25 lb NO_x/hr **CO permit limit:** 13.75 lb CO/hr

$$\text{ppm } NO_x \text{ @ 15\% } O_2\text{, ISO conditions} = (\text{ppm } NO_x \text{ @ 15\% } O_2) \left(\frac{P_{std}}{P_{bar}}\right)^{0.5} \times e^{19(H_{obs}-0.00633)} \left(\frac{288°K}{T_{amb}}\right)^{1.53}$$

where: P_{std} = 29.92 in Hg., standard barometric pressure
P_{bar} = measured barometric pressure
H_{obs} = humidity of ambient air
T_{amb} = measured ambient temperature (°K)

3. SOURCE DESCRIPTION AND OPERATION

Three natural gas turbines (1008, 1009, 1010) are installed at the Columbia Gulf Transmission Company in Rayne, Louisiana. The turbine tested is a Rolls Royce Model 1533-76G gas turbine. The turbine is rated at 12,500 HP with a maximum rated heat capacity of 160.72 MBtu/hour. Emissions testing is required for only one of the three identical gas turbines (1010) because of the similarity of the effluent concentrations of each turbine.

Seven reciprocating compressors (1001-1007) are also operating at the Rayne facility. The compressor tested was a GMWA-8 Type C/B. Each compressor is rated at 2000 HP with a maximum rated heat capacity of 14.275 MBtu/hr. Only one (1002) of the compressors was tested because they are identical. All the turbines and compressors at the facility are used to compress natural gas for pipeline transmission.

Figures 1 and 2 are schematics of the sampling locations for the gas turbine and the reciprocating compressor that were tested. These figures also indicate the traverse points used for both the effluent concentration measurements and the EPA Method 20 O_2 traverse.

The engine operating parameters and atmospheric data were recorded at 15-minute intervals for the compressor and at 5-minute intervals for the gas turbine by Columbia Gulf personnel. Process data are included in Appendix F to this report.

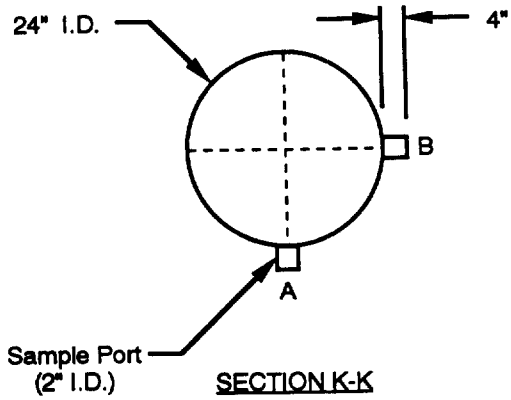

Location of Traverse Points	
1	0.8"
2	2.5"
3	4.7"
4	7.8"
5	16.2"
6	19.3"
7	21.5"
8	23.2"

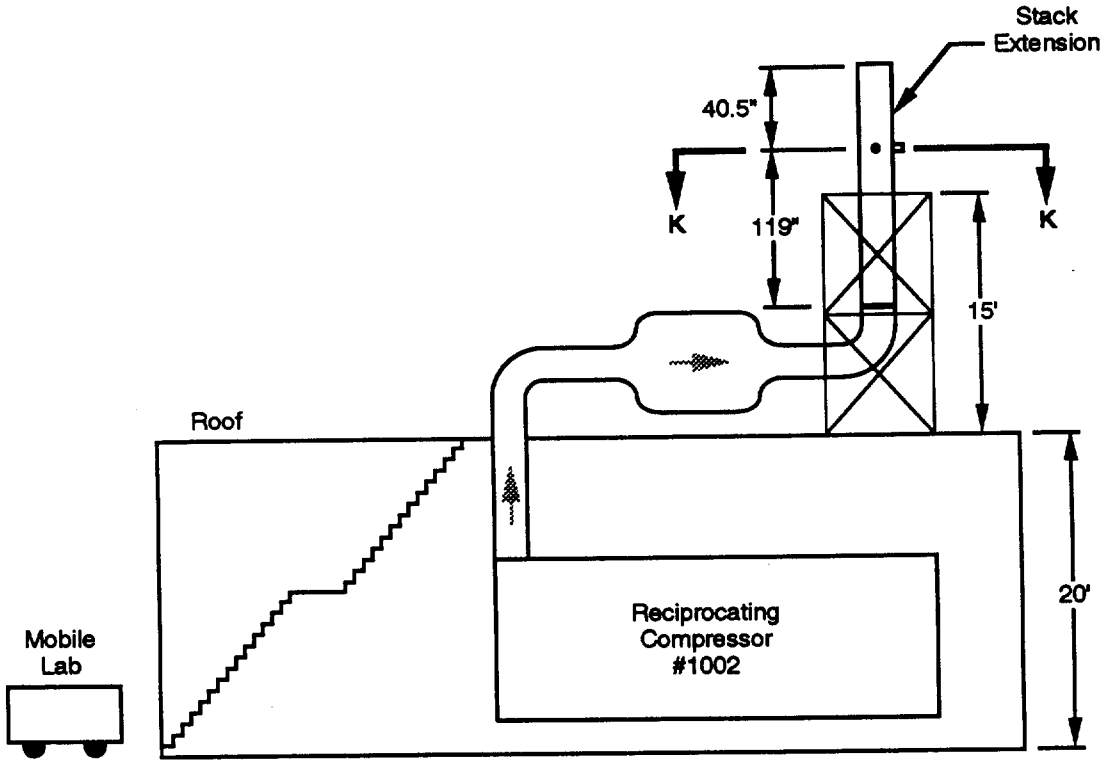

Figure 1. Reciprocating compressor #1002 sampling location.

Location of Traverse Points	
1	7.5"
2	22.5"
3	37.4"
4	52.3"
5	67.3"
6	82.2"
7	97.2"
8	112.0"

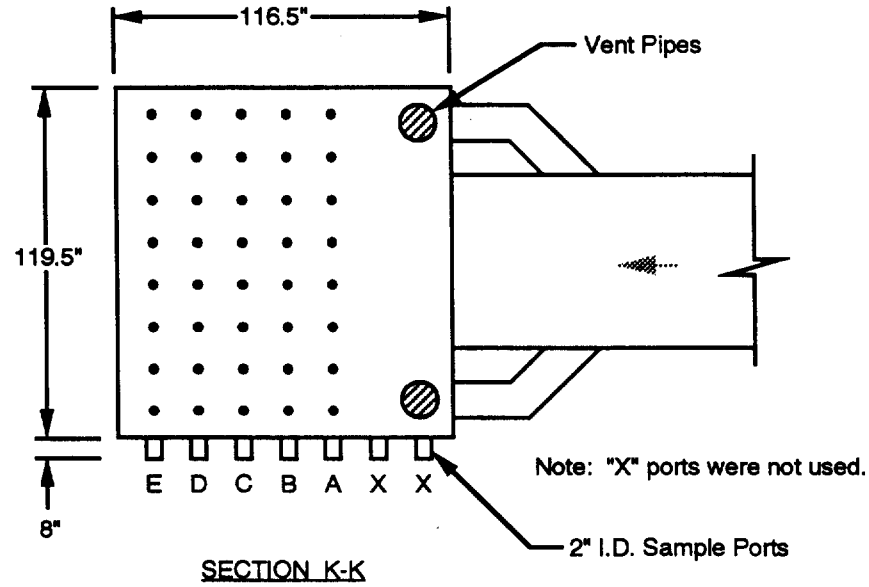

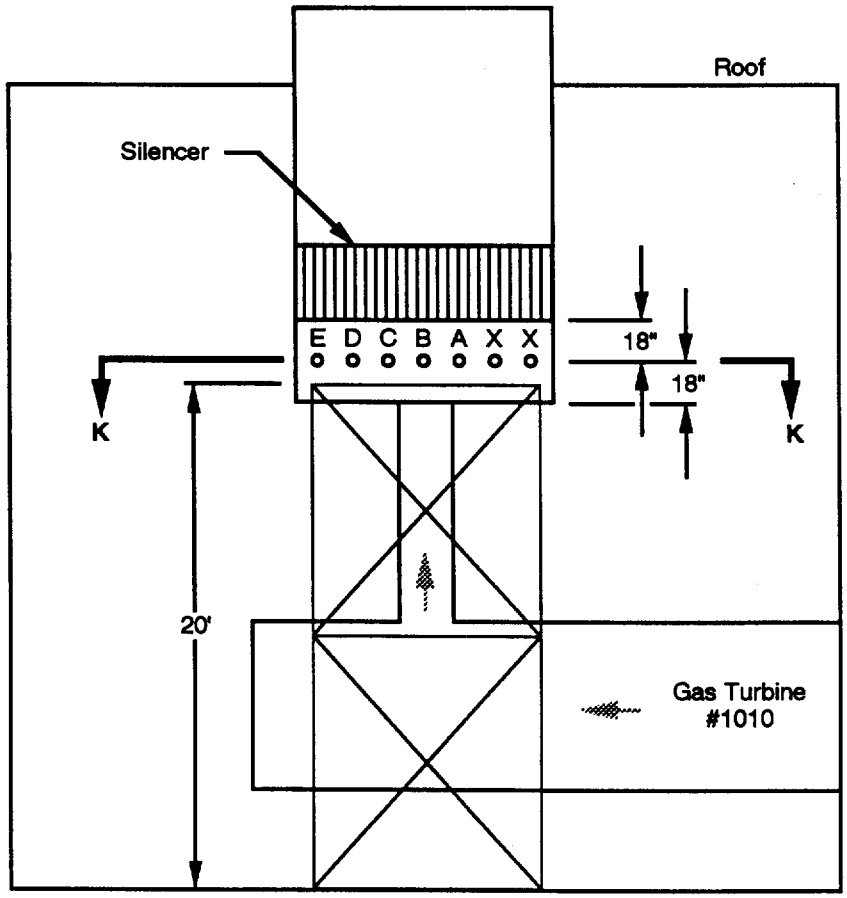

Figure 2. Gas turbine #1010 sampling location.

4. TEST EQUIPMENT AND PROCEDURES

The sampling and analytical requirements for this program included the determination of NO_x, CO, O_2, CO_2, and volumetric flowrate. The specific procedures employed for meeting these requirements are detailed below.

4.1 TEST EQUIPMENT DESCRIPTION

The instrumentation and all sampling procedures utilized by Entropy for the testing conform with the requirements of EPA Method 20 and Subpart GG "Standards of Performance for Stationary Gas Turbines," and EPA Test Methods 3A, 7E, and 10 (40 CFR 60, Appendix A) for the reciprocating compressor.

Table 3 presents a list of the analyzers used during this testing program to quantify the gaseous emissions. Figure 3 is a schematic of the extractive measurement system used by Entropy. The extractive monitors require that the effluent sample be conditioned to eliminate any possible interference (i.e., water vapor and particulate matter), before being transported and injected into each analyzer. All components of the sampling system which contact the sample are either stainless steel, glass, or Teflon. A heated probe with an in-stack borosilicate glass wool particulate filter, a heated sample line, a moisture removal trap, an out-of-stack secondary particulate filter, a sample pump, a secondary moisture removal trap, and distribution manifold board are used to

TABLE 3. ANALYZERS USED FOR THE EMISSIONS TESTING PROGRAM

Parameter	Instrument	Measurement Technique	Measurement Range
NO_x	Thermo Electron Model 10	Chemiluminescence	0-1500 ppm NO_x 0-2500 ppm NO_x
O_2	Teledyne Model 320P-4	Fuel Cell	0-25% O_2
CO	Thermo Electron Model 48	GFC/IR	0-1000 ppm CO
CO_2	Fuji 3300	NDIR	0-20% CO_2

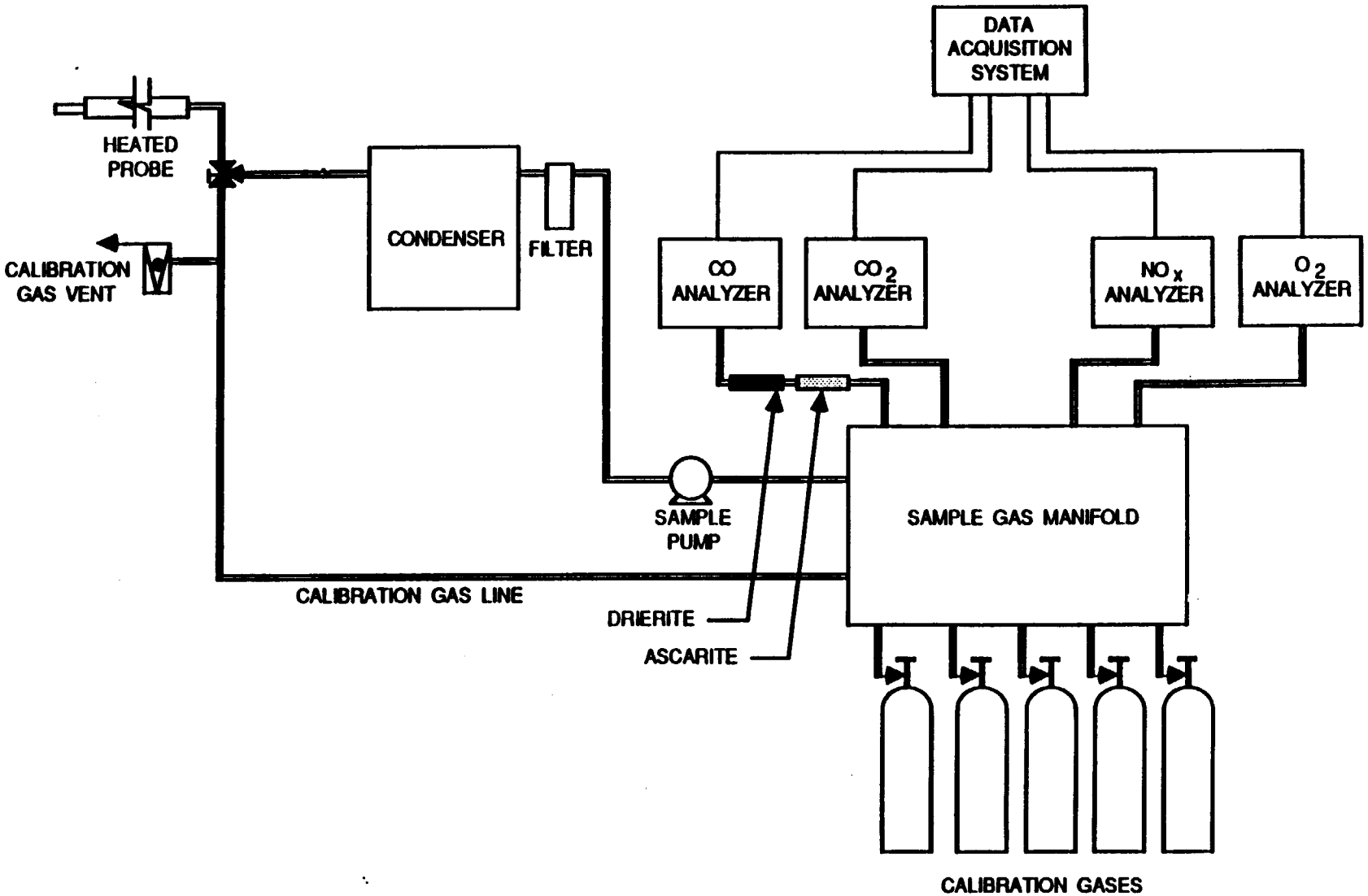

Figure 3. Mobile CEM system setup.

deliver a representative sample of flue gas to the analyzers. Details of the major components of the measurement system are presented below.

The sampling probe is constructed of Type 316 stainless steel. A 12-foot length of heated 3/8-inch O.D. Teflon tubing connects the probe to the ice bath condenser.

The condenser consists of a 30-foot coil of Teflon tubing followed by a glass condensate trap, all immersed in an ice bath to remove any moisture from the sample. The system was designed to minimize contact between the sample and the condensate. The sample exiting the condenser passes through a heated Balston particulate filter and is then transported through unheated 3/8-inch O.D. Teflon tubing by way of a Teflon-lined sample pump to the flow distribution manifold board, where the flow to the analyzers is monitored and controlled.

The sample acquisition/sample conditioning system also includes two calibration gas injection ports located: (1) immediately upstream to the analyzers for analyzer linearity checks, and (2) at the outlet of the probe for the sampling system bias and calibration drift checks. This arrangement provides both ease in checking the analyzer performance and a means of evaluating the entire monitoring system.

A Thermo Electron Model 10 NO/NO_x analyzer was used to automatically and continuously determine the concentration of nitrogen oxides (NO_x) in the effluent. The analytical technique of the analyzer is chemiluminescence. In the determination of NO_x, the sample is routed through a converter where the NO_2 is dissociated to form NO. The sample is then passed through a reaction chamber where the NO is quantitatively converted to NO_2 by gas phase oxidation with molecular ozone produced within the analyzer. In this reaction, the NO_2 molecules are elevated to an electronically excited state, and then immediately reverted to a non-excited ground state. This reversion is accompanied by an

emission of photons, which impinge on a photomultiplier detector, and generate a low-level DC current. The current is then amplified and used to drive a front panel meter and a data recorder. The NO_x concentration measured by the instrument includes the contributions of both the NO in the effluent and the NO resulting from the dissociation of NO_2.

The Teledyne Model 320P-4 utilizes a patented micro-fuel cell that consumes O_2 from the atmosphere surrounding the measuring probe. The consumption of O_2 generates a proportional electrical current, which is then amplified and used to drive a built-in front panel meter with a scale of 0-25%. Facilities are also provided for a recorder hook-up with a range of 0-100 mv DC.

The instrument incorporates its own integral pump and power system. The power system consists of two permanently mounted rechargeable nickel-cadmium batteries.

A Fuji Model 3300 non-dispersive infrared (NDIR) analyzer was used to automatically and continuously measure the CO_2 concentrations in the effluent. The theory of operation for this analyzer is based on the principle that CO_2 has a unique absorption line spectrum in the infrared region. The instrument consists of an infrared light source, a chopper, a measurement cell, and a detector. The infrared light beam emitted by the source passes through the measuring cell, which is filled with a continuously flowing gas sample. The light beam is partially absorbed or attenuated by the gas species of interest in this cell before reaching the front chamber of the detector. Both the front and rear chambers of the sealed detector are filled with a reference gas. The difference in the amount of light absorbed between the front and rear chambers is dependent on the concentration of the gas species of interest within the sample measurement cell; a pressure differential is thus created between the two chambers. This pressure difference is then observed as gas flow by the micro-

flow sensor located in a channel connecting the two chambers. The resulting AC signal from the micro-flow sensor is rectified, amplified, and linearized into a DC voltage signal for output.

The TECO Model 48 employs gas filter correlation (GFC) to measure CO by infrared (IR) absorption. GFC employs a correlation wheel consisting of two hemispherical cells, one filled with CO and the other filled with nitrogen (N_2). Radiation from the IR source is chopped and passed through the correlation wheel, alternating between the CO cell and the N_2 cell. Passing an infrared beam through the CO gas cell in the correlation filter provides a reference signal that cannot be attenuated further by the CO in the gas sample. The N_2 cell is transparent to the IR radiation and therefore produces a measurement beam which can be absorbed by CO in the sample cell. Radiation then passes through a narrow bandpass interference filter and enters a multiple optical pass sample cell, where absorption by the sample gas occurs. Other gases in the sample do not cause modulation of the detector signal, since they absorb the reference and measurement beams equally.

Infrared absorption is a non-linear measurement technique. To correct for this characteristic, instrument electronics convert the analyzer signal into a linear output. The exact calibration curve is stored in the instrument's microcomputer memory and is used to linearize the instrument output over all ranges. The microcomputer is also used to process signals from a pressure transducer and a temperature transducer to correct instrument output for changes in the temperature or pressure of the sample gas.

The data acquisition system (DAS) employed by Entropy for this test program uses a portable personal computer with a 20 MB hard disk and an internal 12-bit analog-to-digital converter with a 16-channel multiplexer. In addition to providing an instantaneous display of analyzer responses, the DAS compiles the

analyzer data collected once each second and averages them, calculates emission rates, and documents analyzer calibrations. The test data and calibrations are stored on hard disk and printed on a dot matrix printer.

4.2 TEST PROCEDURES

Concentration measurements of O_2 and NO_x were made according to EPA Method 20 for the gas turbine and EPA Methods 3A and 7E for the compressor. CO concentrations were determined using EPA Method 10, and CO_2 concentrations were measured according to EPA Method 3A (40 CFR 60, Appendix A). These methods require that the tester: (1) select appropriate apparatus meeting the applicable equipment specifications of the methods, (2) conduct an interference response test prior to the testing program, and (3) conduct various measurements during the testing program to demonstrate conformance with the measurement system performance specifications. All pre-test and field checks of the CEMS, as well as all measurements made throughout the test program, were conducted according to the procedures specified in the EPA test methods.

Prior to the testing, each analyzer in the reference monitoring system was calibrated with zero and mid-level calibration gases. Monitor linearity was then checked by injecting low, mid, and high-level calibration gases. All analyzers displayed nonlinearity of less than $\pm$ 2 percent allowed by each test method.

Eight sampling points were used for the gas turbine test, two minutes per point for a total test time of 16 minutes. For the compressor test, the sample points were located at 16.7, 50.0, and 83.3 percent of the duct diameter. Sample time at each point was 20 minutes.

The average of each of the measurements was used to calculate the average NO_x, CO, O_2, and CO_2 concentrations for the run. Zero and upscale calibration drift checks were conducted for each test run; each final zero and upscale

calibration value served as the initial zero and calibration value for the following run. Although not required by Method 10, the same calibration and data reduction procedures were used for the CO determinations to improve the quality of the reference data. The analyzer measurements were recorded by a PC-based data acquisition system.

Ambient humidity data were used in the computation of ppm NO_x at 15 percent O_2 and ISO standard ambient conditions. The ambient humidity determinations were made at ground level under the turbine air intake using a psychrometer. Atmospheric pressure was determined using a 4-inch dial barometer calibrated to the National Weather Service readings in Raleigh, North Carolina.

The low, mid, and high level NO (in N_2) and CO (in N_2) calibration gases used for the emissions testing were blended and certified by the vendor according to EPA Protocol 1 procedures. Two additional calibration gases were used to show linearity on the lower end of the 0-2500 ppm measurement range for the NO_x analyzer. The O_2 and CO_2 calibration gases were either analyzed by the vendor according to EPA Protocol 1 or by Entropy using EPA Method 3 to verify the manufacturer's tag value.

Prior to the field tests, monitor performance tests were conducted in Entropy's laboratory. All documentation relevant to these tests is included in Appendix E. The interference test includes all possible interference gases specified in Method 20. No interference was observed in the NO_x, CO, O_2, and CO_2 monitors. The NO_2-to-NO converter efficiency check was performed by preparing an equal volume mix of NO in N_2 calibration gas and purified compressed air in a Tedlar bag; the gas mixture was then sampled over a period of 30 minutes. Method 20 specifies that the response at the end of the 30-minute test period should not have decreased by more than 2.0% of the peak response. At the end of

the 30-minute test period, the response had decreased by 0.58% of the peak response, indicating acceptable converter operation.

A system response time was conducted on-site for the NO_x analyzer immediately prior to the test program; both upscale and downscale responses were determined according to the procedures in EPA Method 20. Response time data sheets are included in Appendix E.

Appendix A.

- EPA Methods 3A, 7E, and 10 Measurement Data Corrected for Calibration Drift and Calculated NO_x and CO Emission Rates
- Method 20 Calculation Worksheets
- Example Calculations

CALCULATION OF AVERAGE NOx AND CO EMISSIONS

RUN: COMP-1 (13:15 - 14:15)
SOURCE: COLUMBIA GULF TRANSMISSION 1002
TEST DATE: 3/17/92

GAS VALUE	INITIAL CAL	FINAL CAL	MEAN CAL
0.0 ppm NOx	1.3	3.9	2.6
837.0 ppm NOx	836.4	840.0	838.2
0.0 ppm CO	0.0	0.0	0.0
301.0 ppm CO	298.4	295.4	296.9
0.00 % Oxygen	0.06	0.06	0.06
11.99 % Oxygen	11.98	11.90	11.94
0.00 % CO2	0.03	0.06	0.05
11.00 % CO2	10.94	10.94	10.94

Uncorrected Results: 434.6 ppm NOx
53.8 ppm CO
15.41 % Oxygen
3.20 % CO2

Flow Rate (Qstd): 9.265E+03 DSCFM

==========

CORRECTED RESULTS

432.7 ppm NOx	3.18 % CO2
52.8 ppm CO	15.49 % Oxygen
1.952 lb NOx/MBTU	28.7 lb NOx/hr
0.145 lb CO/MBTU	2.1 lb CO/hr

==========

Corrected Conc. = $Cma(\bar{C} - Co)/(Cm - Co)$

Where: $\bar{C}$ = mean reference measurement
Co = mean zero calibration response
Cm = mean mid or upscale calibration gas response
Cma = actual mid or upscale calibration gas concentration

NOTE: CO concentrations are corrected for the lost volume of CO2 using a multiplication factor of [1 - (%CO2/100)].

lb NOx or CO/hr = (ppm)(Conv. Factor)(Qstd)(60)
lb NOx or CO/MBTU = (ppm)(Conv. Factor)(F-Factor)(20.9/20.9 - %O2)

Where: NOx Conv. Factor = 1.194E-07 lb NO2/DSCF - ppm NOx
CO Conv. Factor = 7.263E-08 lb CO/DSCF - ppm CO
F-Factor 8626

CALCULATION OF AVERAGE NOx AND CO EMISSIONS

RUN: COMP-3 (15:55 - 16:55)
SOURCE: COLUMBIA GULF TRANSMISSION 1002
TEST DATE: 3/17/92

GAS VALUE	INITIAL CAL	FINAL CAL	MEAN CAL
0.0 ppm NOx	3.8	3.7	3.8
837.0 ppm NOx	838.8	842.9	840.9
0.0 ppm CO	0.0	0.0	0.0
301.0 ppm CO	297.3	294.0	295.7
0.00 % Oxygen	0.09	0.08	0.09
11.99 % Oxygen	11.95	11.94	11.95
0.00 % CO2	0.07	0.07	0.07
11.00 % CO2	10.93	10.90	10.92

Uncorrected Results: 343.0 ppm NOx
52.7 ppm CO
15.52 % Oxygen
3.15 % CO2

Flow Rate (Qstd): 9.268E+03 DSCFM

==========

CORRECTED RESULTS

339.2 ppm NOx	3.12 % CO2
52.0 ppm CO	15.60 % Oxygen
1.562 lb NOx/MBTU	22.5 lb NOx/hr
0.146 lb CO/MBTU	2.1 lb CO/hr

==========

Corrected Conc. = $Cma(\bar{C} - Co)/(Cm - Co)$

Where: $\bar{C}$ = mean reference measurement
Co = mean zero calibration response
Cm = mean mid or upscale calibration gas response
Cma = actual mid or upscale calibration gas concentration

NOTE: CO concentrations are corrected for the lost volume of CO2 using a multiplication factor of [1 - (%CO2/100)].

lb NOx or CO/hr = (ppm)(Conv. Factor)(Qstd)(60)
lb NOx or CO/MBTU = (ppm)(Conv. Factor)(F-Factor)(20.9/20.9 - %O2)

Where: NOx Conv. Factor = 1.194E-07 lb NO2/DSCF - ppm NOx
CO Conv. Factor = 7.263E-08 lb CO/DSCF - ppm CO
F-Factor 8625

CALCULATION OF AVERAGE NOx AND CO EMISSIONS

RUN: GT-1 (12:58 - 13:14)
SOURCE: COLUMBIA GULF TRANSMISSION 1010
TEST DATE: 3/18/92

GAS VALUE	INITIAL CAL	FINAL CAL	MEAN CAL
0.0 ppm CO	0.0	0.0	0.0
301.0 ppm CO	297.4	297.3	297.4
0.00 % CO2	0.03	0.04	0.04
11.00 % CO2	11.05	10.89	10.97

Uncorrected Results:

36.2 ppm NOx
122.2 ppm CO
17.07 % Oxygen
2.31 % CO2
1021.17 Btu/ft3 (from fuel analysis)
152,880 scfh (fuel gas flow)
156.12 Mbtu/hr (heat input)

==========

CORRECTED RESULTS

36.2 ppm NOx	2.28 % CO2
120.9 ppm CO	17.07 % Oxygen
0.203 lb NOx/MBTU	31.76 lb NOx/hr
0.413 lb CO/MBTU	64.50 lb CO/hr

==========

Corrected Conc. = $Cma(\bar{C} - Co)/(Cm - Co)$

Where: $\bar{C}$ = mean reference measurement
Co = mean zero calibration response
Cm = mean mid or upscale calibration gas response
Cma = actual mid or upscale calibration gas concentration

NOTE: CO concentrations are corrected for the lost volume of CO2 using a multiplication factor of [1 - (%CO2/100)].

Mbtu/hr = (mscfh)(Btu/ft3/1000)
lb NOx or CO/MBTU = (ppm)(Conv. Factor)(F-Factor)(20.9/20.9 - %O2)
lb NOx or CO/hr = (lb/Mbtu)(Mbtu/hr)
F-Factor 8626

CALCULATION OF AVERAGE NOx AND CO EMISSIONS

RUN: COMP-2 (14:35 - 15:35)
SOURCE: COLUMBIA GULF TRANSMISSION 1002
TEST DATE: 3/17/92

GAS VALUE	INITIAL CAL	FINAL CAL	MEAN CAL
0.0 ppm NOx	3.9	3.8	3.9
837.0 ppm NOx	840.0	838.8	839.4
0.0 ppm CO	0.0	0.0	0.0
301.0 ppm CO	295.4	297.3	296.4
0.00 % Oxygen	0.06	0.09	0.08
11.99 % Oxygen	11.90	11.95	11.93
0.00 % CO2	0.06	0.07	0.07
11.00 % CO2	10.94	10.93	10.94

Uncorrected Results: 420.0 ppm NOx
52.1 ppm CO
15.42 % Oxygen
3.20 % CO2

Flow Rate (Qstd): 9.398E+03 DSCFM

==========

CORRECTED RESULTS

416.8 ppm NOx	3.17 % CO2
51.2 ppm CO	15.52 % Oxygen
1.891 lb NOx/MBTU	28.1 lb NOx/hr
0.141 lb CO/MBTU	2.1 lb CO/hr

==========

Corrected Conc. = $Cma(\bar{C} - Co)/(Cm - Co)$

Where: $\bar{C}$ = mean reference measurement
Co = mean zero calibration response
Cm = mean mid or upscale calibration gas response
Cma = actual mid or upscale calibration gas concentration

NOTE: CO concentrations are corrected for the lost volume of CO2 using a multiplication factor of [1 - (%CO2/100)].

lb NOx or CO/hr = (ppm)(Conv. Factor)(Qstd)(60)
lb NOx or CO/MBTU = (ppm)(Conv. Factor)(F-Factor)(20.9/20.9 - %O2)

Where: NOx Conv. Factor = 1.194E-07 lb NO2/DSCF - ppm NOx
CO Conv. Factor = 7.263E-08 lb CO/DSCF - ppm CO
F-Factor 8626

CALCULATION OF AVERAGE NOx AND CO EMISSIONS

RUN: GT-2 (13:24 - 13:40)
SOURCE: COLUMBIA GULF TRANSMISSION 1010
TEST DATE: 3/18/92

GAS VALUE	INITIAL CAL	FINAL CAL	MEAN CAL
0.0 ppm CO	0.0	0.0	0.0
301.0 ppm CO	297.3	297.4	297.4
0.00 % CO2	0.04	0.04	0.04
11.00 % CO2	10.89	10.88	10.89

Uncorrected Results:

36.3 ppm NOx
121.2 ppm CO
17.06 % Oxygen
2.31 % CO2
1021.17 Btu/ft3 (from fuel analysis)
152,880 scfh (fuel gas flow)
156.12 Mbtu/hr (heat input)

==========

CORRECTED RESULTS

36.3 ppm NOx	2.30 % CO2
119.8 ppm CO	17.06 % Oxygen
0.203 lb NOx/MBTU	31.77 lb NOx/hr
0.408 lb CO/MBTU	63.75 lb CO/hr

==========

Corrected Conc. = $Cma(\bar{C} - Co)/(Cm - Co)$

Where: $\bar{C}$ = mean reference measurement
Co = mean zero calibration response
Cm = mean mid or upscale calibration gas response
Cma = actual mid or upscale calibration gas concentration

NOTE: CO concentrations are corrected for the lost volume of CO2 using a multiplication factor of [1 - (%CO2/100)].

Mbtu/hr = (mscfh)(Btu/ft3/1000)
lb NOx or CO/MBTU = (ppm)(Conv. Factor)(F-Factor)(20.9/20.9 - %O2)
lb NOx or CO/hr = (lb/Mbtu)(Mbtu/hr)
F-Factor 8626

EPA METHOD 20 CALCULATIONS

Plant Name: COLUMBIA GULF TRANSMISSION
Test Date: 3/18/92
Run Number: GT-1
Time: 12:58 - 13:14
Load: 100 %

Point	Oxygen (Percent)	NOx (ppm)	NOx at 15% Oxygen
1	17.08	36.5	56.4
2	17.08	36.5	56.4
3	17.07	36.2	55.8
4	17.06	36.3	55.8
5	17.08	36.0	55.6
6	17.07	36.0	55.5
7	17.05	35.9	55.0
8	17.03	35.8	54.6
AVG	17.07	36.2	55.6

Horsepower	13,141	Hp
Wet bulb temperature	68	deg. F
Dry bulb temperature	72	deg. F
Ambient temperature in Kelvin (Tamb)	290	deg. K
Barometric Pressure	29.69	in. Hg.
Specific Humidity (Hobs)	0.01387	#H2O/#air
Fuel Flow Rate (uncorrected)	140,000	scfh
Fuel gas compression factor	1.092	(factor)
Fuel Flow Rate (corrected)	152,880	scfh
Gross calorific value	1021.17	Btu/ft3
Heat Input	156.12	MMBtu/hr
F-Factor (Fd)	8626	DSCF/MMBtu
Dry Exhaust Flow Rate	122,317	DSCFM
Flue Gas Carbon Dioxide, Dry	2.31	% CO2
Reference Combuster Inlet Press. (Pref)	29.92	psia
Absolute Combuster Inlet Press. (Pobs)	29.69	psia

Emission Rate:

63.7 ppm NOx @ ISO & O2 conditions

CALCULATION OF AVERAGE NOx AND CO EMISSIONS

RUN: GT-3 (13:51 - 14:07)
SOURCE: COLUMBIA GULF TRANSMISSION 1010
TEST DATE: 3/18/92

GAS VALUE	INITIAL CAL	FINAL CAL	MEAN CAL
0.0 ppm CO	0.0	0.1	0.1
301.0 ppm CO	297.4	295.5	296.5
0.00 % CO2	0.04	0.05	0.05
11.00 % CO2	10.88	10.88	10.88

Uncorrected Results:

36.2 ppm NOx
120.3 ppm CO
17.02 % Oxygen
2.32 % CO2
1021.17 Btu/ft3 (from fuel analysis)
152,880 scfh (fuel gas flow)
156.12 Mbtu/hr (heat input)

==========

CORRECTED RESULTS

36.2 ppm NOx	2.31 % CO2
119.2 ppm CO	17.02 % Oxygen
0.201 lb NOx/MBTU	31.35 lb NOx/hr
0.402 lb CO/MBTU	62.77 lb CO/hr

==========

Corrected Conc. = $Cma(\bar{C} - Co)/(Cm - Co)$

Where: $\bar{C}$ = mean reference measurement
Co = mean zero calibration response
Cm = mean mid or upscale calibration gas response
Cma = actual mid or upscale calibration gas concentration

NOTE: CO concentrations are corrected for the lost volume of CO2 using a multiplication factor of [1 - (%CO2/100)].

Mbtu/hr = (mscfh)(Btu/ft3/1000)
lb NOx or CO/MBTU = (ppm)(Conv. Factor)(F-Factor)(20.9/20.9 - %O2)
lb NOx or CO/hr = (lb/Mbtu)(Mbtu/hr)
F-Factor 8626

EPA METHOD 20 CALCULATIONS

Plant Name: COLUMBIA GULF TRANSMISSION
Test Date: 3/18/92
Run Number: GT-1
Time: 12:58 - 13:14
Load: 100 %

Point	Oxygen (Percent)	NOx (ppm)	NOx at 15% Oxygen
1	17.08	36.5	56.4
2	17.08	36.5	56.4
3	17.07	36.2	55.8
4	17.06	36.3	55.8
5	17.08	36.0	55.6
6	17.07	36.0	55.5
7	17.05	35.9	55.0
8	17.03	35.8	54.6
AVG	17.07	36.2	55.6

Horsepower	13,141 Hp
Wet bulb temperature	68 deg. F
Dry bulb temperature	72 deg. F
Ambient temperature in Kelvin (Tamb)	290 deg. K
Barometric Pressure	29.69 in. Hg.
Specific Humidity (Hobs)	0.01387 #H2O/#air
Fuel Flow Rate (uncorrected)	140,000 scfh
Fuel gas compression factor	1.092 (factor)
Fuel Flow Rate (corrected)	152,880 scfh
Gross calorific value	1021.17 Btu/ft3
Heat Input	156.12 MMBtu/hr
F-Factor (Fd)	8626 DSCF/MMBtu
Dry Exhaust Flow Rate	122,317 DSCFM
Flue Gas Carbon Dioxide, Dry	2.31 % CO2
Reference Combuster Inlet Press. (Pref)	29.92 psia
Absolute Combuster Inlet Press. (Pobs)	29.69 psia

Emission Rate:

63.7 ppm NOx @ ISO & O2 conditions

EPA METHOD 20 CALCULATIONS

Plant Name: COLUMBIA GULF TRANSMISSION
Test Date: 3/18/92
Run Number: GT-2
Time: 13:24 - 13:40
Load: 100 %

Point	Oxygen (Percent)	NOx (ppm)	NOx at 15% Oxygen
1	17.07	36.4	56.1
2	17.07	36.6	56.4
3	17.07	36.2	55.8
4	17.08	36.2	55.9
5	17.08	36.2	55.9
6	17.07	36.4	56.1
7	17.05	36.5	55.9
8	17.04	36.3	55.5
AVG	17.07	36.4	55.9

Horsepower	12,997	Hp
Wet bulb temperature	68	deg. F
Dry bulb temperature	72	deg. F
Ambient temperature in Kelvin (Tamb)	290	deg. K
Barometric Pressure	29.69	in. Hg.
Specific Humidity (Hobs)	0.01387	#H2O/#air
Fuel Flow Rate (uncorrected)	140,000	scfh
Fuel gas compression factor	1.092	(factor)
Fuel Flow Rate (corrected)	152,880	scfh
Gross calorific value	1021.17	Btu/ft3
Heat Input	156.12	MMBtu/hr
F-Factor (Fd)	8626	DSCF/MMBtu
Dry Exhaust Flow Rate	122,357	DSCFM
Flue Gas Carbon Dioxide, Dry	2.31	% CO2
Reference Combuster Inlet Press. (Pref)	29.92	psia
Absolute Combuster Inlet Press. (Pobs)	29.69	psia

Emission Rate:

64.1 ppm NOx @ ISO & O2 conditions

EPA METHOD 20 CALCULATIONS

Plant Name: COLUMBIA GULF TRANSMISSION
Test Date: 3/18/92
Run Number: GT-3
Time: 13:51 - 14:07
Load: 100 %

Point	Oxygen (Percent)	NOx (ppm)	NOx at 15% Oxygen
1	17.03	36.3	55.3
2	17.04	35.8	54.7
3	17.03	36.4	55.5
4	17.02	36.2	55.0
5	17.01	36.4	55.2
6	17.02	36.0	54.7
7	17.02	36.5	55.5
8	16.99	36.3	54.8
AVG	17.02	36.2	55.1

Horsepower	12,990 Hp
Wet bulb temperature	68 deg. F
Dry bulb temperature	72 deg. F
Ambient temperature in Kelvin (Tamb)	290 deg. K
Barometric Pressure	29.69 in. Hg.
Specific Humidity (Hobs)	0.01387 #H2O/#air
Fuel Flow Rate (uncorrected)	140,000 scfh
Fuel gas compression factor	1.092 (factor)
Fuel Flow Rate (corrected)	152,880 scfh
Gross calorific value	1021.17 Btu/ft3
Heat Input	156.12 MMBtu/hr
F-Factor (Fd)	8626 DSCF/MMBtu
Dry Exhaust Flow Rate	120,899 DSCFM
Flue Gas Carbon Dioxide, Dry	2.31 % CO2
Reference Combuster Inlet Press. (Pref)	29.92 psia
Absolute Combuster Inlet Press. (Pobs)	29.69 psia

Emission Rate:

63.2 ppm NOx @ ISO & O2 conditions

$$H_{obs} = H_{obs}^{*} - \frac{0.240 + (0.44)\ H_{obs}^{*}\ (T_d - T_w)}{1094 + (0.44)\ (T_d) - T_w}$$

$$= 0.01479 - \frac{0.240 + (0.44)(0.01479)(72 - 68)}{1094 + (0.44)\ (72) - 68}$$

$$H_{obs} = 0.013867 \frac{\text{lb } H_2O}{\text{lb dry air}}$$

where:

H_{obs} = specific humidity

3. CALCULATION OF EXHAUST FLOW RATES USING EPA METHOD 19

Calculate the heat consumption of the turbine:

$$HI = GCV \times FQT / 10E6$$

where: HI = Heat Input (MBtu HHV/hr)
GCV = Gross Calorific Value of Fuel (Btu/cf) from Fuel Analysis
FQT = Fuel Flow Rate (SCFH)

Calculate the dry exhaust gas flow rate from the F-Factor in Method 19:

$$DSCFM = F_d \frac{20.9}{20.9 - \%O_{2d}} HI/60$$

where: F_d = dry F-Factor (DSCF/MBtu) from fuel analysis
$\%O_{2d}$ = dry basis flue gas oxygen concentration from EPA Method 3A

<u>EXAMPLE</u>:

For natural gas:

Fuel Analysis Results: GCV = 1021.17 BTU/cf
F_d = 8626 DSCF/MBtu

Turbine Operation Data: FQT = 152880 SCFH fuel flow rate

EPA Method 3A Results: $\%O_2$ = 17.07
$\%CO_2$ = 2.28

EXAMPLE CALCULATIONS

1. CALCULATION OF EMISSIONS OF NO_x @ 15% O_2, NO_{xobs}

Test Run 1: Full Load

$$NO_x \text{ @ } 15\% \ O_2 = \frac{(\text{ppm } NO_x)(5.9)}{(20.9 - \%O_2)}$$

$$= \frac{(36.2)\ (5.9)}{(20.9 - 17.07)}$$

$$NO_x \text{ @ } 15\% \ O_2 = 55.8 \text{ ppm}$$

2. DETERMINATION OF SPECIFIC HUMIDITY FROM PSYCHROMETER DATA, H_{obs}

$$P_{air}^* = P_{bar} - P_{sat. @ Tw}$$

$$= (29.69 - 0.690) \text{ in. Hg}$$

$$P_{air}^* = 29.00 \text{ in. Hg}$$

where:

P_{air}^* = partial pressure of dry air in air/H_2O vapor mixture saturated at T_w and P_{bar}

P_{bar} = barometric pressure

$P_{sat. @ Tw}$ = partial pressure of H_2O vapor in air/H_2O vapor mixture saturated at T_w and P_{bar} (from steam table)

T_w = wet bulb temperature

$$H_{obs}^* = \frac{(0.622)(P_{sat. @ T_w})}{P_{air}^*}$$

$$= \frac{(0.622)\ (0.690)}{29.00}$$

$$H_{obs}^* = 0.01479 \ \frac{\text{lb } H_2O}{\text{lb dry air}}$$

where:

H_{obs}^* = specific humidity of air/H_2O vapor mixture saturated at T_w and P_{bar}

$$HI = (1021.17)(152{,}880)/10E6 = 156.12 \text{ MBtu/hr}$$

Using the flue gas oxygen concentration:

$$DSCFM = (8626)\ \frac{20.9}{20.9 - 17.07}\ (156.12/60) = 122{,}317 \text{ DSCFM}$$

4. CALCULATION OF EMISSION RATES IN TERMS OF LB/MBtu

$$E\ (lb/MBtu) = (ppm)(Conv.\ Factor)(F\text{-}Factor)(20.9/20.9 - O_2)$$

<u>EXAMPLE</u>:

EPA Method 20 Results: % O_2 = 17.07
ppm NO_x = 36.2

EPA Method 10 Results: ppm CO = 120.9

Fuel Analysis Results: F_d = 8626 dscf/MBtu

Conversion Factors: 1.194×10^{-7} lb NO_2/dscf - ppm NO_x
7.263×10^{-8} lb CO/dscf - ppm CO

$$E\ (lb/MBtu) = (36.2)(1.194 \times 10^{-7})(8626)(20.9/20.9\text{-}17.07)$$
$$= 0.203 \text{ lb } NO_x/MBtu$$

$$E\ (lb/MBtu) = (120.9)(7.263 \times 10^{-8})(8626)(20.9/20.9\text{-}17.07)$$
$$= 0.468 \text{ lb CO/MBtu}$$

5. CALCULATION OF POLLUTANT EMISSION RATES

$$E(lb/hr) = (lb/MBtu)(MBtu/hr)$$

<u>EXAMPLE</u>:

EPA Method 20 Result: 0.203 lb NO_x/MBtu

Calculated Heat Input: 156.12 MBtu/hr

$$E\ (lb/hr) = (0.203)(156.12)$$
$$= 31.76 \text{ lb } NO_x/hr$$

EPA Method 10 Result: 0.468 lb CO/MBtu

$$E\ (lb/hr) = (0.468)(156.12)$$
$$= 73.13 \text{ lb CO/hr}$$

Appendix B. Test Data

- Uncorrected Computer-Recorded NO_x, CO, O_2, and CO_2 Reference Measurements
- Calibration Summaries

CALIBRATION SUMMARY

SOURCE: COLUMBIA GAS / IC ENG

REASON: INITIAL DIRECT CAL

DATE : 03-17-1992 TIME: 12:20 - 12:35

A/D CHAN	MONITOR DESCRIPTION	UNITS	GAS VALUE	MONITOR RESPONSE
2	STACK	ppmNOX	0.0	1.0
2	STACK	ppmNOX	837.0	837.8
2	STACK	ppmNOX	1205.0	1206.0
1	STACK	% O2	0.00	0.05
1	STACK	% O2	11.99	11.99
1	STACK	% O2	20.50	20.37
4	STACK	ppmCO	0.0	0.0
4	STACK	ppmCO	301.0	294.5
4	STACK	ppmCO	594.0	586.5
4	STACK	ppmCO	901.0	912.9
0	STACK	% CO2	0.00	0.02
0	STACK	% CO2	11.00	10.99
0	STACK	% CO2	17.47	17.61

CALIBRATION SUMMARY

SOURCE: COLUMBIA GAS / IC ENG

REASON: SYSTEM CAL PRE TEST 1

DATE : 03-17-1992 TIME: 12:35 - 12:57

A/D CHAN	MONITOR DESCRIPTION	UNITS	GAS VALUE	MONITOR RESPONSE
2	STACK	ppmNOX	0.0	1.3
2	STACK	ppmNOX	837.0	836.4
1	STACK	% O2	0.00	0.06
1	STACK	% O2	11.99	11.98
4	STACK	ppmCO	0.0	0.0
4	STACK	ppmCO	301.0	298.4
4	STACK	ppmCO	594.0	549.5
4	STACK	ppmCO	901.0	900.1
0	STACK	% CO2	0.00	0.03
0	STACK	% CO2	11.00	10.94

COLUMBIA GAS / IC ENG 03-17-1992

TIME	CHAN 2 STACK ppmNOX	CHAN 1 STACK % O2	CHAN 4 STACK ppmCO	CHAN 0 STACK % CO2
13:16	429.2	15.42	54.4	3.20
13:17	456.6	15.41	54.0	3.19
13:18	439.7	15.41	53.8	3.20
13:19	428.2	15.41	54.0	3.20
13:20	439.3	15.41	54.8	3.20
13:21	457.1	15.42	53.2	3.20
13:22	431.3	15.43	53.9	3.19
13:23	415.6	15.43	54.1	3.20
13:24	428.4	15.43	54.6	3.20
13:25	432.2	15.43	53.7	3.20
13:26	433.4	15.43	54.0	3.20
13:27	420.0	15.43	54.0	3.20
13:28	422.1	15.42	54.1	3.20
13:29	419.7	15.43	53.1	3.20
13:30	430.1	15.43	53.5	3.20
13:31	440.7	15.44	54.3	3.20
13:32	437.4	15.43	53.9	3.21
13:33	423.2	15.44	54.5	3.20
13:34	429.3	15.43	53.9	3.20
13:35	448.0	15.42	55.0	3.20

AVERAGE VALUES FOR THE LAST 20 MINUTES

13:35	433.1	15.42	54.0	3.20
13:36	455.7	15.43	54.3	3.20
13:37	416.1	15.42	54.0	3.20
13:38	446.6	15.40	54.0	3.20
13:39	444.2	15.39	54.6	3.20
13:40	449.9	15.38	53.9	3.20
13:41	425.0	15.37	54.4	3.21
13:42	434.4	15.39	54.3	3.20
13:43	440.0	15.39	54.2	3.20
13:44	426.7	15.39	54.7	3.20
13:45	424.1	15.38	54.1	3.20
13:46	444.1	15.38	53.7	3.21
13:47	440.6	15.39	52.8	3.20
13:48	424.1	15.38	54.0	3.20
13:49	431.0	15.39	54.0	3.20
13:50	431.3	15.40	53.8	3.20
13:51	451.6	15.40	52.7	3.20
13:52	450.9	15.41	53.0	3.20
13:53	448.3	15.42	53.8	3.19
13:54	432.8	15.43	53.2	3.20
13:55	429.5	15.43	53.7	3.21

AVERAGE VALUES FOR THE LAST 20 MINUTES

13:55	437.3	15.40	53.9	3.20
13:56	428.1	15.44	54.0	3.20
13:57	435.8	15.43	53.5	3.20
13:58	452.3	15.43	52.9	3.21
13:59	435.1	15.45	53.5	3.20
14:00	424.3	15.44	53.8	3.21
14:01	430.5	15.45	53.2	3.20
14:02	442.3	15.44	53.8	3.20

CALIBRATION SUMMARY

SOURCE: COLUMBIA GAS / IC ENG

REASON: SYSTEM CAL POST 1 PRE 2

DATE : 03-17-1992 TIME: 14:15 - 14:22

A/D CHAN	MONITOR DESCRIPTION	UNITS	GAS VALUE	MONITOR RESPONSE
2	STACK	ppmNOX	0.0	3.9
2	STACK	ppmNOX	837.0	840.0
1	STACK	% O2	0.00	0.06
1	STACK	% O2	11.99	11.90
4	STACK	ppmCO	0.0	0.0
4	STACK	ppmCO	301.0	295.4
0	STACK	% CO2	0.00	0.06
0	STACK	% CO2	11.00	10.94

COLUMBIA GAS / IC ENG 03-17-1992

TIME	CHAN 2 STACK ppmNOX	CHAN 1 STACK % O2	CHAN 4 STACK ppmCO	CHAN 0 STACK % CO2
14:03	433.9	15.43	53.0	3.21
14:04	432.9	15.43	54.3	3.21
14:05	428.3	15.42	53.5	3.20
14:06	434.1	15.40	53.6	3.21
14:07	423.2	15.40	54.2	3.20
14:08	426.0	15.39	53.9	3.20
14:09	449.4	15.38	53.7	3.20
14:10	426.5	15.38	53.8	3.20
14:11	434.8	15.37	53.7	3.20
14:12	432.0	15.37	53.0	3.20
14:13	437.5	15.37	52.9	3.20
14:14	431.9	15.36	53.8	3.21
14:15	427.7	15.37	52.8	3.20

AVERAGE VALUES FOR THE LAST 20 MINUTES

14:15	433.3	15.41	53.5	3.20

AVERAGE VALUES FOR THE LAST HOUR: 60 MINUTES OF VALID DATA

14:15	434.6	15.41	53.8	3.20

COMMENTS: END OF RUN 1
COMPRESSOR 1002

COLUMBIA GAS / IC ENG 03-17-1992

TIME	CHAN 2 STACK ppmNOX	CHAN 1 STACK % O2	CHAN 4 STACK ppmCO	CHAN 0 STACK % CO2
14:36	437.4	15.42	52.9	3.21
14:37	450.9	15.42	52.7	3.21
14:38	426.6	15.41	53.2	3.22
14:39	430.1	15.42	52.1	3.22
14:40	429.3	15.43	52.4	3.21
14:41	434.7	15.42	52.0	3.22
14:42	456.7	15.41	51.5	3.22
14:43	437.4	15.38	52.9	3.22
14:44	445.2	15.38	52.0	3.22
14:45	448.7	15.39	52.0	3.22
14:46	438.7	15.38	51.9	3.22
14:47	422.1	15.38	51.8	3.22
14:48	446.3	15.35	52.2	3.21
14:49	456.9	15.36	51.5	3.21
14:50	453.0	15.36	51.3	3.21
14:51	434.1	15.36	51.8	3.21
14:52	438.5	15.37	51.6	3.21
14:53	434.7	15.36	53.0	3.22
14:54	441.6	15.38	52.5	3.21
14:55	439.5	15.38	52.1	3.21

AVERAGE VALUES FOR THE LAST 20 MINUTES

14:55	440.1	15.39	52.2	3.21
14:56	433.8	15.39	51.8	3.21
14:57	443.4	15.39	51.8	3.21
14:58	426.5	15.40	52.5	3.20
14:59	459.9	15.40	51.8	3.20
15:00	461.2	15.40	51.5	3.21
15:01	449.9	15.40	52.7	3.21
15:02	427.2	15.42	52.6	3.21
15:03	449.3	15.41	51.8	3.20
15:04	447.3	15.41	51.3	3.20
15:05	436.1	15.41	51.8	3.20
15:06	434.5	15.41	52.0	3.21
15:07	434.6	15.39	51.6	3.20
15:08	444.5	15.38	50.9	3.20
15:09	440.8	15.38	51.2	3.21
15:10	435.9	15.38	51.4	3.20
15:11	451.7	15.37	50.7	3.20
15:12	441.3	15.38	51.4	3.20
15:13	432.0	15.40	51.0	3.20
15:14	420.8	15.39	51.7	3.20
15:15	436.8	15.38	51.0	3.21

AVERAGE VALUES FOR THE LAST 20 MINUTES

15:15	440.4	15.39	51.6	3.20
15:16	443.4	15.39	51.3	3.21
15:17	372.0	15.46	50.9	3.16
15:18	393.9	15.45	52.8	3.18
15:19	389.7	15.46	53.0	3.18
15:20	398.7	15.47	53.6	3.18
15:21	397.0	15.47	53.4	3.18
15:22	362.0	15.48	53.6	3.18

COLUMBIA GAS / IC ENG 03-17-1992

TIME	CHAN 2 STACK ppmNOX	CHAN 1 STACK % O2	CHAN 4 STACK ppmCO	CHAN 0 STACK % CO2
15:23	383.0	15.47	52.6	3.18
15:24	387.4	15.48	52.9	3.17
15:25	377.7	15.47	51.3	3.17
15:26	374.8	15.47	52.2	3.17
15:27	378.5	15.47	52.7	3.17
15:28	369.1	15.46	52.5	3.17
15:29	374.0	15.45	51.6	3.17
15:30	373.2	15.46	52.7	3.17
15:31	368.3	15.48	52.8	3.17
15:32	365.4	15.48	52.7	3.18
15:33	359.9	15.51	51.8	3.16
15:34	361.6	15.50	51.8	3.18
15:35	362.0	15.51	53.3	3.17

AVERAGE VALUES FOR THE LAST 20 MINUTES

15:35	379.6	15.47	52.5	3.18

AVERAGE VALUES FOR THE LAST HOUR: 60 MINUTES OF VALID DATA

15:35	420.0	15.42	52.1	3.20

COMMENTS: END OF RUN 2
COMPRESSOR 1002

CALIBRATION SUMMARY

SOURCE: COLUMBIA GAS / IC ENG

REASON: SYSTEM CAL POST 2 PRE 3

DATE : 03-17-1992 TIME: 15:35 - 15:48

A/D CHAN	MONITOR DESCRIPTION	UNITS	GAS VALUE	MONITOR RESPONSE
2	STACK	ppmNOX	0.0	3.8
2	STACK	ppmNOX	837.0	838.8
1	STACK	% O2	0.00	0.09
1	STACK	% O2	11.99	11.95
4	STACK	ppmCO	0.0	0.0
4	STACK	ppmCO	301.0	297.3
0	STACK	% CO2	0.00	0.07
0	STACK	% CO2	11.00	10.93

COLUMBIA GAS / IC ENG 03-17-1992

TIME	CHAN 2 STACK ppmNOX	CHAN 1 STACK % O2	CHAN 4 STACK ppmCO	CHAN 0 STACK % CO2
15:56	342.9	15.50	53.3	3.15
15:57	349.0	15.51	51.4	3.15
15:58	347.9	15.52	53.0	3.15
15:59	344.3	15.51	52.8	3.16
16:00	348.3	15.52	53.5	3.15
16:01	358.3	15.52	53.0	3.15
16:02	342.6	15.52	52.7	3.15
16:03	339.1	15.53	52.7	3.15
16:04	350.4	15.53	52.7	3.15
16:05	341.4	15.52	53.0	3.16
16:06	335.1	15.52	54.0	3.15
16:07	347.7	15.51	52.5	3.16
16:08	348.7	15.52	53.3	3.15
16:09	347.3	15.51	52.5	3.16
16:10	346.1	15.52	52.7	3.15
16:11	333.7	15.52	52.4	3.15
16:12	343.4	15.51	53.3	3.16
16:13	347.7	15.51	53.8	3.15
16:14	338.5	15.52	52.6	3.16
16:15	341.1	15.53	52.7	3.15

AVERAGE VALUES FOR THE LAST 20 MINUTES

16:15	344.7	15.52	52.9	3.15
16:16	350.3	15.54	51.8	3.15
16:17	342.4	15.53	52.6	3.15
16:18	347.5	15.54	52.7	3.15
16:19	337.4	15.53	52.0	3.15
16:20	365.2	15.53	52.6	3.15
16:21	338.8	15.52	52.1	3.15
16:22	342.2	15.51	52.4	3.16
16:23	346.0	15.50	53.3	3.16
16:24	338.2	15.50	53.4	3.16
16:25	346.6	15.51	53.3	3.15
16:26	329.8	15.51	52.2	3.15
16:27	360.5	15.51	52.7	3.15
16:28	347.8	15.53	52.0	3.14
16:29	344.2	15.51	53.2	3.15
16:30	344.3	15.51	53.3	3.14
16:31	339.1	15.50	52.5	3.15
16:32	332.3	15.50	53.2	3.15
16:33	357.8	15.51	52.4	3.14
16:34	350.0	15.52	51.6	3.14
16:35	328.8	15.52	52.3	3.15

AVERAGE VALUES FOR THE LAST 20 MINUTES

16:35	344.4	15.52	52.6	3.15
16:36	345.7	15.52	53.0	3.15
16:37	333.7	15.53	52.8	3.14
16:38	337.5	15.53	51.5	3.14
16:39	347.4	15.53	51.4	3.14
16:40	330.8	15.52	53.3	3.14
16:41	355.3	15.52	52.6	3.14
16:42	333.5	15.53	52.2	3.14

COLUMBIA GAS / IC ENG 03-17-1992

TIME	CHAN 2 STACK ppmNOX	CHAN 1 STACK % O2	CHAN 4 STACK ppmCO	CHAN 0 STACK % CO2
16:43	333.7	15.52	52.0	3.14
16:44	346.1	15.51	53.0	3.14
16:45	321.2	15.51	52.5	3.14
16:46	356.5	15.52	53.9	3.14
16:47	339.6	15.51	52.8	3.14
16:48	337.0	15.51	53.2	3.15
16:49	327.9	15.51	53.2	3.15
16:50	356.6	15.51	53.5	3.14
16:51	335.1	15.50	53.2	3.15
16:52	339.4	15.50	53.1	3.14
16:53	335.9	15.51	52.7	3.14
16:54	339.1	15.51	52.7	3.14
16:55	342.7	15.51	52.7	3.14

AVERAGE VALUES FOR THE LAST 20 MINUTES

16:55	339.7	15.52	52.8	3.14

AVERAGE VALUES FOR THE LAST HOUR: 60 MINUTES OF VALID DATA

16:55	343.0	15.52	52.7	3.15

COMMENTS: END OF RUN 3
COMPRESSOR 1002

CALIBRATION SUMMARY

SOURCE: COLUMBIA GAS / IC ENG

REASON: SYSTEM CAL POST 3

DATE : 03-17-1992 TIME: 16:55 - 17:04

A/D CHAN	MONITOR DESCRIPTION	UNITS	GAS VALUE	MONITOR RESPONSE
2	STACK	ppmNOX	0.0	3.7
2	STACK	ppmNOX	837.0	842.9
1	STACK	% O2	0.00	0.08
1	STACK	% O2	11.99	11.94
4	STACK	ppmCO	0.0	0.0
4	STACK	ppmCO	301.0	294.4
0	STACK	% CO2	0.00	0.07
0	STACK	% CO2	11.00	10.90

CALIBRATION SUMMARY

SOURCE: COLUMBIA GAS / GAS TURBINE 1010

REASON: INITIAL DIRECT CAL

DATE : 03-18-1992 TIME: 10:37 - 11:09

A/D CHAN	MONITOR DESCRIPTION	UNITS	GAS VALUE	MONITOR RESPONSE
2	STACK	ppmNOX	0.0	0.5
2	STACK	ppmNOX	142.2	141.1
2	STACK	ppmNOX	238.0	238.2
2	STACK	ppmNOX	837.0	839.0
2	STACK	ppmNOX	1205.0	1210.2
2	STACK	ppmNOX	2170.0	2150.0
1	STACK	% O2	0.00	0.06
1	STACK	% O2	11.99	12.00
1	STACK	% O2	20.50	20.39
4	STACK	ppmCO	0.0	0.1
4	STACK	ppmCO	301.0	299.4
4	STACK	ppmCO	594.0	592.4
4	STACK	ppmCO	901.0	897.5
0	STACK	% CO2	0.00	-0.00
0	STACK	% CO2	11.00	10.98
0	STACK	% CO2	17.47	17.63

CALIBRATION SUMMARY

SOURCE: COLUMBIA GAS /

REASON: SYSTEM CAL PRE 1

DATE : 03-18-1992 TIME: 11:09 - 11:27

A/D CHAN	MONITOR DESCRIPTION	UNITS	GAS VALUE	MONITOR RESPONSE
2	STACK	ppmNOX	0.0	1.2
2	STACK	ppmNOX	142.2	140.1
1	STACK	% O2	0.00	0.08
1	STACK	% O2	11.99	12.00
4	STACK	ppmCO	0.0	0.0
4	STACK	ppmCO	301.0	297.4
4	STACK	ppmCO	594.0	594.4
4	STACK	ppmCO	901.0	893.4
0	STACK	% CO2	0.00	0.03
0	STACK	% CO2	11.00	11.05

COLUMBIA GAS / 03-18-1992

TIME	CHAN 2 STACK ppmNOX	CHAN 1 STACK % O2	CHAN 4 STACK ppmCO	CHAN 0 STACK % CO2
11:29	35.0	17.09	123.4	2.27
11:30	34.8	17.10 1	122.4	2.27
11:31	34.2	17.16	121.1	2.24
11:32	34.2	17.17 2	119.6	2.24
11:33	34.7	17.10	120.6	2.30
11:34	35.0	17.08 3	122.6	2.31
11:35	34.6	17.10	122.1	2.30
11:36	34.3	17.11 4	122.2	2.30
11:37	34.4	17.11	122.7	2.31
11:38	34.6	17.11 5	123.6	2.31
11:39	34.6	17.10	123.7	2.32
11:40	34.7	17.10 6	124.5	2.32
11:41	34.8	17.09	124.5	2.32
11:42	35.1	17.09 7	123.9	2.32
11:43	34.9	17.10 8	123.7	2.32

COMMENTS: O2
END OF PORT A

PORT A
1 17.1
2 17.2
3 17.1
4 17.1
5 17.1
6 17.1
7 17.1
8 17.1

COLUMBIA GAS / 03-18-1992

TIME	CHAN 2 STACK ppmNOX	CHAN 1 STACK % O2	CHAN 4 STACK ppmCO	CHAN 0 STACK % CO2	
11:47	35.4	17.15	122.8	2.30	17.2
11:48	35.5	17.15	122.1	2.30	
11:49	35.4	17.17	122.6	2.30	17.2
11:50	35.3	17.17	123.2	2.30	
11:51	35.4	17.16	123.6	2.31	17.2
11:52	35.4	17.17	123.1	2.32	
11:53	35.0	17.18	123.4	2.31	17.2
11:54	35.1	17.18	123.9	2.31	
11:55	35.3	17.17	123.6	2.31	17.2
11:56	35.4	17.16	123.2	2.31	
11:57	35.3	17.16	123.2	2.31	17.2
11:58	35.3	17.17	123.6	2.31	
11:59	35.3	17.17	123.9	2.31	17.2
12:00	35.2	17.17	124.4	2.31	
12:01	35.3	17.18	124.2	2.31	17.2
12:02	35.3	17.19	124.2	2.31	

COMMENTS: END OF PORT B

COLUMBIA GAS / 03-18-1992

TIME	CHAN 2 STACK ppmNOX	CHAN 1 STACK % O2	CHAN 4 STACK ppmCO	CHAN 0 STACK % CO2	
12:05	35.6	17.17	122.6	2.31	17.2
12:06	35.6	17.16	123.2	2.31	
12:07	35.6	17.14	123.5	2.31	17.1
12:08	35.4	17.13	123.6	2.32	
12:09	35.4	17.13	123.6	2.31	17.1
12:10	35.4	17.13	123.7	2.31	
12:11	35.4	17.13	123.6	2.31	17.1
12:12	35.4	17.12	123.2	2.32	
12:13	35.4	17.11	123.1	2.32	17.1
12:14	35.4	17.11	123.1	2.32	
12:15	35.4	17.11	123.0	2.32	17.1
12:16	35.4	17.11	123.6	2.31	
12:17	35.4	17.11	123.2	2.31	17.1
12:18	35.4	17.12	123.5	2.31	17.1
12:19	35.4	17.11	122.9	2.32	
12:20	35.4	17.09	122.7	2.32	17.1

COMMENTS: END OF PORT C

COLUMBIA GAS / 03-18-1992

TIME	CHAN 2 STACK ppmNOX	CHAN 1 STACK % O2	CHAN 4 STACK ppmCO	CHAN 0 STACK % CO2	
12:23	36.3	17.12	121.3	2.31	
12:24	36.3	17.12	122.5	2.31	17.1
12:25	36.0	17.12	122.7	2.31	
12:26	35.8	17.10	123.0	2.31	17.1
12:27	35.8	17.07	122.8	2.32	
12:28	35.7	17.07	122.6	2.32	17.1
12:29	35.5	17.06	122.9	2.31	
12:30	35.6	17.08	122.5	2.31	17.1
12:31	35.6	17.08	122.7	2.31	
12:32	35.6	17.07	123.1	2.31	17.1
12:33	35.9	17.07	122.7	2.31	
12:34	36.0	17.05	122.9	2.31	17.1
12:35	36.1	17.05	122.7	2.31	
12:36	36.1	17.06	122.6	2.31	17.1
12:37	35.8	17.07	121.9	2.31	
12:38	35.5	17.07	122.6	2.31	17.1

COMMENTS: END OF PORT D

COLUMBIA GAS / 03-18-1992

TIME	CHAN 2 STACK ppmNOX	CHAN 1 STACK % O2	CHAN 4 STACK ppmCO	CHAN 0 STACK % CO2	
12:40	36.6	17.07	121.4	2.31	17.1
12:41	36.6	17.07	121.6	2.31	
12:42	36.6	17.07	121.3	2.31	17.1
12:43	36.6	17.08	121.4	2.31	
12:44	36.4	17.08	121.6	2.31	17.1
12:45	36.4	17.08	121.6	2.31	
12:46	36.3	17.08	121.6	2.32	17.1
12:47	36.2	17.08	121.6	2.32	
12:48	36.1	17.08	121.8	2.32	17.1
12:49	36.2	17.07	122.1	2.32	
12:50	36.2	17.07	121.7	2.32	17.1
12:51	36.1	17.07	122.1	2.32	
12:52	35.8	17.05	122.6	2.32	17.1
12:53	35.5	17.06	123.2	2.31	
12:54	36.0	17.06	122.9	2.32	17.1
12:55	36.3	17.06	121.6	2.32	

COMMENTS: END OF PORT E

COLUMBIA GAS / GAS TURBINE 03-18-1992

	TIME	CHAN 2 STACK ppmNOX	CHAN 1 STACK % O2	CHAN 4 STACK ppmCO	CHAN 0 STACK % CO2
	12:59	36.3	17.10	68.6	2.30
Pt.1	13:00	36.5	17.08	122.1	2.31
	13:01	36.5	17.08	122.1	2.31
2	13:02	36.4	17.08	121.6	2.31
	13:03	36.5	17.08	121.8	2.31
3	13:04	36.2	17.07	121.9	2.31
	13:05	36.2	17.06	121.9	2.31
4	13:06	36.2	17.06	122.1	2.31
	13:07	36.3	17.06	121.9	2.31
5	13:08	35.9	17.07	121.9	2.32
	13:09	36.1	17.08	122.4	2.31
6	13:10	35.9	17.07	122.6	2.31
	13:11	36.1	17.07	122.6	2.32
7	13:12	36.0	17.05	122.4	2.32
	13:13	35.8	17.05	121.9	2.32
	13:14	35.8	17.03	122.9	2.32
	AVERAGE VALUES FOR THE LAST 16 MINUTES				
8	13:14	36.2	17.07	118.8	2.31
	13:15	35.7	17.03	122.6	2.31

Do not count this 1st minute in average, CO was not stable.

COMMENTS: END OF G T - 1

127.18

Pt #	NOx	O_2
1	36.5	17.08
2	36.5	17.08
3	36.2	17.07
4	36.3	17.06
5	36.0	17.08
6	36.0	17.07
7	35.9	17.05
8	35.8	17.03

CALIBRATION SUMMARY

SOURCE: COLUMBIA GAS / GAS TURBINE

REASON: SYSTEM POST 1 PRE 2

DATE : 03-18-1992 TIME: 13:15 - 13:22

A/D CHAN	MONITOR DESCRIPTION	UNITS	GAS VALUE	MONITOR RESPONSE
2	STACK	ppmNOX	0.0	1.2
2	STACK	ppmNOX	142.2	145.3
1	STACK	% O2	0.00	0.07
1	STACK	% O2	11.99	12.10
4	STACK	ppmCO	0.0	0.0
4	STACK	ppmCO	301.0	297.3
0	STACK	% CO2	0.00	0.04
0	STACK	% CO2	11.00	10.89

COLUMBIA GAS / GAS TURBINE 03-18-1992

	TIME	CHAN 2 STACK ppmNOX	CHAN 1 STACK % O2	CHAN 4 STACK ppmCO	CHAN 0 STACK % CO2
Pt. 1	13:25	36.2	17.06	123.5	2.31
	13:26	36.5	17.08	121.6	2.31
2	13:27	36.5	17.07	120.8	2.31
	13:28	36.6	17.06	120.6	2.32
3	13:29	36.4	17.06	120.4	2.32
	13:30	36.0	17.07	121.6	2.32
4	13:31	36.2	17.08	121.4	2.31
	13:32	36.4	17.08	121.0	2.31
5	13:33	36.4	17.08	121.0	2.31
	13:34	35.9	17.08	121.3	2.31
6	13:35	36.4	17.08	121.9	2.31
	13:36	36.4	17.06	121.6	2.31
7	13:37	36.6	17.05	119.9	2.31
	13:38	36.4	17.04	121.0	2.32
8	13:39	36.4	17.04	120.8	2.32
	13:40	36.2	17.04	121.0	2.31

AVERAGE VALUES FOR THE LAST 16 MINUTES

13:40	36.3	17.06	121.2	2.31
13:41	36.3	17.04	121.1	2.31

Pt#	NOX	O2
1	36.4	17.07
2	36.6	17.07
3	36.2	17.07
4	36.2	17.08
5	36.2	17.08
6	36.4	17.07
7	36.5	17.05
8	36.3	17.04

CALIBRATION SUMMARY

SOURCE: COLUMBIA GAS / GAS TURBINE

REASON: SYSTEM CAL POST 2 PRE 3

DATE : 03-18-1992 TIME: 13:41 - 13:48

A/D CHAN	MONITOR DESCRIPTION	UNITS	GAS VALUE	MONITOR RESPONSE
2	STACK	ppmNOX	0.0	1.2
2	STACK	ppmNOX	142.2	146.2
1	STACK	% O2	0.00	0.07
1	STACK	% O2	11.99	12.10
4	STACK	ppmCO	0.0	0.0
4	STACK	ppmCO	301.0	297.4
0	STACK	% CO2	0.00	0.04
0	STACK	% CO2	11.00	10.88

COLUMBIA GAS / GAS TURBINE 03-18-1992

	TIME	CHAN 2 STACK ppmNOX	CHAN 1 STACK % O2	CHAN 4 STACK ppmCO	CHAN 0 STACK % CO2
Pt#1	13:52	36.4	17.03	119.5	2.32
	13:53	36.2	17.03	120.4	2.32
2	13:54	35.9	17.03	120.6	2.32
	13:55	35.7	17.04	121.8	2.32
3	13:56	36.3	17.03	120.8	2.32
	13:57	36.4	17.02	120.1	2.31
4	13:58	36.2	17.02	120.6	2.32
	13:59	36.2	17.01	120.4	2.32
5	14:00	36.4	17.01	120.2	2.32
	14:01	36.3	17.01	120.6	2.32
6	14:02	35.9	17.02	120.8	2.32
	14:03	36.0	17.02	121.4	2.32
7	14:04	36.4	17.02	120.2	2.32
	14:05	36.6	17.01	119.3	2.32
8	14:06	36.5	16.99	118.7	2.33
	14:07	36.0	16.98	119.5	2.32

AVERAGE VALUES FOR THE LAST 16 MINUTES

14:07	36.2	17.02	120.3	2.32

COMMENTS: END OF GT-3

Pt#	NOx	O2
1	36.3	17.03
2	35.8	17.04
3	36.4	17.03
4	36.2	17.02
5	36.4	17.01
6	36.0	17.02
7	36.5	17.02
8	36.3	16.99

CALIBRATION SUMMARY

SOURCE: COLUMBIA GAS / GAS TURBINE

REASON: SYSTEM CAL POST 4

DATE : 03-18-1992 TIME: 14:07 - 14:13

A/D CHAN	MONITOR DESCRIPTION	UNITS	GAS VALUE	MONITOR RESPONSE
2	STACK	ppmNOX	0.0	1.4
2	STACK	ppmNOX	142.2	144.4
1	STACK	% O2	0.00	0.05
1	STACK	% O2	11.99	12.05
4	STACK	ppmCO	0.0	0.1
4	STACK	ppmCO	301.0	295.5
0	STACK	% CO2	0.00	0.05
0	STACK	% CO2	11.00	10.88

Appendix C. EPA Methods 1, 2, and Alternate Method 4 Volumetric Flowrate Measurement Data

- Source Test Calculations
- Air Flowrate Determinations
- Moisture Field Data Sheets

SOURCE TEST CALCULATIONS
METHOD 2 - 4

PLANT : COLUMBIA GULF TRANSMISSION
COMPRESSOR #1002

RUN NO.: 1
DATE : MARCH 17, 1992

STANDARD TEMP.: 68 DEG. F

METER TEMP.	=	87 DEG. F	STATIC PRESS.	=	-1.00 in. H2O
STACK TEMP.	=	591.70 DEG. F	Cp	=	0.840
SQ.RT. dP	=	1.3400 in. H2O	STACK I.D.	=	24.00 inch
METER ORIFICE	=	0.10 in. H2O	DUCT LENGTH	=	inch
METER VOLUME	=	1.225 Cu.Ft.	DUCT WIDTH	=	inch
METER Y	=	0.9888	STACK AREA	=	3.142 Sq.Ft.
BAR. PRESSURE	=	29.90 in.Hg	TEST TIME	=	30.00 min.
COND.(Vlc)	=	2.4 ml			

GAS ANALYSIS = 15.49 % O2 0.00 % CO
3.18 % CO2 81.33 % N2

****

Vm(std) = [T(std) + 460 / 29.92] x Vm x Y x (Pb + (dH / 13.6)) / (Tm + 460)..... = 1.169 dscf

Vw(std) =(8.9148 x 10e-5) x (Tstd + 460) x Vic = 0.113 scf

Bws = Vw(std) / (Vm(std) + Vw(std))..... = 0.088 | Lower Bws value used.

Bws @ Saturated Conditions = Vapor Press. of H2O @ Dew Point Temp. / (Ps, in.Hg.) ..... = 1.000

%EA =(%O2 - 0.5%CO)/(0.264%N2 - (%O2-0.5%CO)) x 100 = 258.98

Md =(.44 x %CO2)+(.32 x %O2)+[.28 x (%N2 + %CO)] = 29.13

Ms = (Md x (1-Bws)) + (18.0 x Bws)..... = 28.15

P(stack) = Pbar + [Pstatic / 13.6] ..... = 29.83 in. Hg

vs = 85.49 x CP x (Sq.Rt.dP) x [Sq.Rt.(Ts + 460) / (Ms x Ps)] ..... = 107.70 ft/sec

Qs = vs x As x 60 ..... = 20,301 acf/min

Qs(std) = Qs x (1-Bws)x((Tstd + 460)/(Ts + 460)) x (Ps/29.92) ..... = 9,265 dscf/min

SOURCE TEST CALCULATIONS
METHOD 2 - 4

PLANT : COLUMBIA GULF TRANSMISSION
COMPRESSOR #1002

RUN NO.: 2
DATE : MARCH 17, 1992

STANDARD TEMP.: 68 DEG. F

METER TEMP.	=	87 DEG. F	STATIC PRESS.	=	-1.00 in. H2O
STACK TEMP.	=	596.70 DEG. F	Cp	=	0.840
SQ.RT. dP	=	1.3240 in. H2O	STACK I.D.	=	24.00 inch
METER ORIFICE	=	0.10 in. H2O	DUCT LENGTH	=	inch
METER VOLUME	=	1.218 Cu.Ft.	DUCT WIDTH	=	inch
METER Y	=	0.9888	STACK AREA	=	3.142 Sq.Ft.
BAR. PRESSURE	=	29.81 in.Hg	TEST TIME	=	30.00 min.
COND.(Vlc)	=	1.4 ml			

GAS ANALYSIS : 15.52 % O2 0.00 % CO
3.17 % CO2 81.31 % N2

****

Vm(std) = [T(std) + 460 / 29.92] x Vm x Y x (Pb + (dH / 13.6)) / (Tm + 460)..... = 1.159 dscf

Vw(std) =(8.9148 x 10e-5) x (Tstd + 460) x Vic = 0.066 scf

Bws = Vw(std) / (Vm(std) + Vw(std))..... = 0.054 | Lower Bws value used.

Bws @ Saturated Conditions = Vapor Press. of H2O @ Dew Point Temp. / (Ps, in.Hg.) ..... = 1.000

%EA =(%O2 - 0.5%CO)/(0.264%N2 - (%O2-0.5%CO)) x 100 = 261.02

Md =(.44 x %CO2)+(.32 x %O2)+[.28 x (%N2 + %CO)] = 29.13

Ms = (Md x (1-Bws)) + (18.0 x Bws)..... = 28.53

P(stack) = Pbar + [Pstatic / 13.6] ..... = 29.74 in. Hg

vs = 85.49 x CP x (Sq.Rt.dP) x [Sq.Rt.(Ts + 460) / (Ms x Ps)] ..... = 106.11 ft/sec

Qs = vs x As x 60 ..... = 20,002 acf/min

Qs(std) = Qs x (1-Bws)x((Tstd + 460)/(Ts + 460)) x (Ps/29.92) ..... = 9,398 dscf/min

SOURCE TEST CALCULATIONS
METHOD 2 - 4

PLANT : COLUMBIA GULF TRANSMISSION
COMPRESSOR #1002

RUN NO.: 3
DATE : MARCH 17, 1992

STANDARD TEMP.: 68 DEG. F

METER TEMP.	=	86 DEG. F	STATIC PRESS.	=	-1.00 in. H2O
STACK TEMP.	=	587.90 DEG. F	Cp	=	0.840
SQ.RT. dP	=	1.3230 in. H2O	STACK I.D.	=	24.00 inch
METER ORIFICE	=	0.10 in. H2O	DUCT LENGTH	=	inch
METER VOLUME	=	1.367 Cu.Ft.	DUCT WIDTH	=	inch
METER Y	=	0.9888	STACK AREA	=	3.142 Sq.Ft.
BAR. PRESSURE	=	29.80 in.Hg	TEST TIME	=	30.00 min.
COND.(Vlc)	=	2.2 ml			

GAS ANALYSIS : 15.60 % O2 0.00 % CO
3.12 % CO2 81.28 % N2

****

Vm(std) = [T(std) + 460 / 29.92] x Vm x Y x (Pb + (dH / 13.6)) / (Tm + 460)..... = 1.302 dscf

Vw(std) =(8.9148 x 10e-5) x (Tstd + 460) x Vic = 0.104 scf

Bws = Vw(std) / (Vm(std) + Vw(std))..... = 0.074 | Lower Bws value used.

Bws @ Saturated Conditions = Vapor Press. of H2O @ Dew Point Temp. / (Ps, in.Hg.) ..... = 1.000

%EA =(%O2 - 0.5%CO)/(0.264%N2 - (%O2-0.5%CO)) x 100 = 266.31

Md =(.44 x %CO2)+(.32 x %O2)+[.28 x (%N2 + %CO)] = 29.12

Ms = (Md x (1-Bws)) + (18.0 x Bws)..... = 28.30

P(stack) = Pbar + [Pstatic / 13.6] ..... = 29.73 in. Hg

vs = 85.49 x CP x (Sq.Rt.dP) x [Sq.Rt.(Ts + 460) / (Ms x Ps)] ..... = 106.03 ft/sec

Qs = vs x As x 60 ..... = 19,986 acf/min

Qs(std) = Qs x (1-Bws)x((Tstd + 460)/(Ts + 460)) x (Ps/29.92) ..... = 9,268 dscf/min

A. FIELD DATA SUMMARY

PLANT : COLUMBIA GULF TRANSMISSION
COMPRESSOR #1002
DATE : MARCH 17, 1992

	RUN 1	RUN 2	RUN 3
Vlc = Vol water collected in train, ml	2.4	1.4	2.2
Vm = Sample gas vol, meter cond., dacf	1.225	1.218	1.367
Y = Meter calibration factor	0.9888	0.9888	0.9888
Pbar = Barometric pressure, in. Hg	29.90	29.81	29.80
Pstatic = Stack static pressure, in. H2O	-1.00	-1.00	-1.00
dH = Avg meter pressure diff, in. H2O	0.10	0.10	0.10
Tm = Absolute meter temp., degrees R	547.0	547.0	546.0
Vm(std) = Sample gas vol, Std. cond., dscf	1.169	1.159	1.302
Bws = Water vapor in gas stream, fraction	0.088	0.054	0.074
MF = Moisture factor (1 - Bws)	0.912	0.946	0.926
CO2 = Carbon Dioxide, dry, volume %	3.18	3.17	3.12
O2 = Oxygen, dry, volume %	15.49	15.52	15.60
N2 = Nitrogen, dry volume %	81.33	81.31	81.28
Md = Molecular weight of stack gas, dry	29.13	29.13	29.12
Ms = Molecular weight of stack gas, wet	28.15	28.53	28.30
Cp = Pitot tube coefficient	0.84	0.84	0.84
Sq.Rt. dP = Avg. square root of each dP	1.3400	1.3240	1.3230
Ts = Absolute stack temp., degrees R	1051.7	1056.7	1047.9
A = Area of stack, ft2	3.14	3.14	3.14
Qstd = Volumetric flowrate, dscfm	9,265	9,398	9,268
0 = Sample time, minutes	30.00	30.00	30.00

CYCLONIC FLOW DETERMINATIONS

Plant Name Columbia Gas — Job No. 20137

City/State Rayne LA. — Date 3-17-92

Test Loc. Compressor Stack — Personnel GCB HC

Barometric Pres. (Pbar) 29.90 In. Hg — Static Pres. (Pg) -1.0 In. H_2O

Pitot/Orifice ID DP-48-4 Pitot Coef. (C_p) .84 Pres. Gauge Set ID MS-8

Thermocouple ID R234 — Duct Length/Diameter 24" Width ____ ---Specify inches (") or feet (')---

Horizontal Duct Flyash/Dust Buildup > 1" Depth (✓)? Yes ____ No ✓ (If Yes, see Page 2 for Instructions.)

Preliminary Traverses

Start - Finish Times: 1235 - 1200

Test Pt.	Yaw Ang.° φ	ΔP "H_2O	Temp. °F
A1	0	1.75	595
2	-3	1.85	586
3	0	1.80	592
4	+4	1.75	596
5	0	1.75	594
6	0	1.80	594
7	-2	1.82	585
8	-3	1.65	582
B1	0	1.70	590
2	0	1.80	583
3	0	1.85	589
4	-3	1.75	596
5	-8	1.85	597
6	+5	1.85	597
7	0	1.90	596
8	0	1.90	593
Avg.			

ALIGNMENT APPROACH DATA

(OMIT IF AVERAGE OF YAW ANGLES ≤ 20°)

Run No.* ____ Base Time	Min./Point**	Run No.* ____ Base Time	Min./Point**	Run No.* ____ Base Time	Min./Point**
Avg. ΔP_v***		Avg. ΔP_v***		Avg. ΔP_v***	

Note: Yaw angle average is sum of the absolute values divided by number of measurements, and must be ≤ 20°.

ΔP average is square of average square root.

* From isokinetic sampling field data sheet.

** Minutes/Point = cos φ (Base Time).

*** Average $\Delta P_v = [(\Sigma \cos\phi \sqrt{\Delta p}) / n]^2$

See page 2 for cyclonic flow check criteria.

ALTERNATE METHOD 4 (H_2O) SAMPLING DATA

PLANT/LOCATION Columbia GAS JOB# 20137

SAMPLING LOCATION Compressor stack

RUN # CS 1 ANALYST GCB DATE 3-17-92

STACK TEMPERATURE 590 °F METER BOX # G4

AMBIENT TEMPERATURE 86 °F METER BOX FACTOR, Y .988

BAROMETRIC PRESSURE, P_{bar} 29.9 in. Hg

INITIAL TRAIN WEIGHT, W_i 596.5 g FINAL TRAIN WEIGHT, W_f 598.9 g 2.4

CLOCK TIME	DRY GAS METER READING (ft^3)	ROTAMETER SETTING (cfh)	DRY GAS METER TEMPERATURE (°F)
0	109.547	2	88
5	109.758	2	86
10	109.961	2	86
15	110.163	2	86
20	110.369	2	88
25	110.571	2	88
30/off	110.772	2	88
TOTAL VOLUME = V_m	1.225 (ft^3)	AVG. TEMP. = $t_{m\,(avg)}$	87 (°F)

.001 LRS
.002 LR/F

AVERAGE METER TEMP., T = (460 + $t_{m\,(avg)}$) = _____ °R

STD GAS METER VOLUME, $V_{m(std)}$ _____ dscf

$V_{m(std)}$ = (V_m) (Y) (17.64 °R/in. Hg) (P_{bar} / T_m)

TOTAL H_2O CATCH, (W_f - W_i) = _____ g

VOLUME OF H_2O VAPOR CONDENSED, $V_{wc(std)}$ = _____ ft^3

$V_{wc(std)}$ = (4.715×10^{-2} ft^3/g) (W_f - W_i)

PROPORTION OF H_2O VAPOR (BY VOLUME) IN GAS STREAM, B_{ws} = _____

$$B_{ws} = \frac{V_{wc(std)}}{V_{wc(std)} + V_{m(std)}} \qquad \%H_2O = B_{ws} \times 100$$

8.80%

$\%H_2O$ / (1 - B_{ws}) : _____ / _____

AIR FLOW RATE DETERMINATIONS

Plant Name: Columbia Gas — Run No. GS 1

City/State: Rayne LA. — Date: 3-17-92

Test Location: Compressor STACK — Personnel: GCB HL

Barometric Pres. (Pbar): 29.90 In. Hg — Static Pres. (Pg): -1.0 In. H_2O

Pitot/Orifice ID: DP-48-4 — Pitot Coef. (Cp): .84 — Pres. Gauge Set ID: MS-8

Thermocouple ID: R234 — Duct Length/Diameter: 24" Width ____ --Specify inches (") or feet (')--

VELOCITY TRAVERSES
Start-Finish Times: ____ - ____

Point No.	ΔP In. H_2O	Temp. °F
A1	1.75	595
2	1.85	591
3	1.80	594
4	1.75	598
5	1.80	595
6	1.80	585
7	1.85	585
8	1.70	580
B1	1.70	590
2	1.80	588
3	1.85	590
4	1.75	596
5	1.80	598
6	1.85	596
7	1.85	595
8	1.90	593
Avg.*	1.80	591.7

$\sqrt{\Delta P} = 1.34$

* ΔP average is square of average square root.

ORSAT DATA

Sampling Time	Analysis Time	CO_2 (A) Reading	O_2 (B) Reading	$\%O_2$ (B-A)	$\%CO+N_2$ (100-B)
	Average				

Bag No. ____ Pump ____

FYRITE DATA, % CO_2				

MOISTURE DATA (WET BULB/DRY BULB)

Port	Time	Dry Bulb °F	Wet Bulb °F	Diff.	% H_2O

MOISTURE DATA (STOICHIOMETRIC)

Free Water in Fuel, %		
Water from Fuel Combustion, %		
Ambient Water, %		
Relative Humidity, %		
Ambient Temperature, °F		
Total %		

VOLUMETRIC AIR FLOW RATES

Dry at Standard Conditions, Qsd = 9,266.29 SCFM

Wet at Stack Conditions, Qaw = 20,300.79 ACFM

ADDITIONAL DATA

See page 2 for field flow rate calculations.

↑611 #304

AIR FLOW RATE DETERMINATIONS

Run No. CS 2

Plant Name Columbia GAS

Date 3-17-92

City/State RAYNE, LA.

Personnel GCB HL

Test Location Compressor STACK

Barometric Pres. (Pbar) 29.80 In. Hg

Static Pres. (Pg) -1.0 In. H_2O

Pitot/Orifice ID DP-48-4

Pitot Coef. (Cp) .84

Pres. Gauge Set ID MS-8

Thermocouple ID R234

Duct Length/Diameter 24" Width _____
--Specify inches (") or feet (')--

VELOCITY TRAVERSES
Start-Finish Times: 1420 - _____

Point No.	ΔP In. H_2O	Temp. °F
A1	1.65	604
2	1.70	586
3	1.80	591
4	1.75	597
5	1.75	599
6	1.75	600
7	1.85	600
8	1.70	598
B1	1.55	590
2	1.70	592
3	1.75	592
4	1.85	599
5	1.75	599
6	1.85	600
7	1.80	601
8	1.85	599
Avg.*	1.752	596.7

$\sqrt{\Delta P}$ 1.324

* ΔP average is square of average square root.

ORSAT DATA

Sampling Time	Analysis Time	CO_2 (A) Reading	O_2 (B) Reading	$\%O_2$ (B-A)	$\%CO+N_2$ (100-B)
	Average				

Bag No. _____ Pump _____

FYRITE DATA, % CO_2				

MOISTURE DATA (WET BULB/DRY BULB)

Port	Time	Dry Bulb °F	Wet Bulb °F	Diff.	% H_2O

MOISTURE DATA (STOICHIOMETRIC)

Free Water in Fuel, %		
Water from Fuel Combustion, %		
Ambient Water, %		
Relative Humidity, %		
Ambient Temperature, °F		
Total %		

VOLUMETRIC AIR FLOW RATES

Dry at Standard Conditions, Qsd = 9399.2 SCFM

Wet at Stack Conditions, Qaw = 20,001.2 ACFM

ADDITIONAL DATA

See page 2 for field flow rate calculations.

ALTERNATE METHOD 4 (H_2O) SAMPLING DATA

PLANT/LOCATION Columbia Gas JOB# 20137

SAMPLING LOCATION Compressor Stack

RUN # CS2 ANALYST _____ DATE 3-12-92

STACK TEMPERATURE 590 °F METER BOX # G4

AMBIENT TEMPERATURE 85 °F METER BOX FACTOR, ¥ .9888

BAROMETRIC PRESSURE, P_{bar} 29.81 in. Hg

INITIAL TRAIN WEIGHT, W_i 598.9 g FINAL TRAIN WEIGHT, W_f 600.3 g 1.40

CLOCK TIME	DRY GAS METER READING (ft^3)	ROTAMETER SETTING (cfh)	DRY GAS METER TEMPERATURE (°F)
0	110.902	2	88
5	111.108	2	88
10	111.316	2	86
15	111.520	2	86
20	111.718	2	86
25	111.918	2	87
30/0 Ft	112.120	2	87
TOTAL VOLUME = V_m	1.218 (ft^3)	AVG. TEMP. = $t_{m\,(avg)}$	87 (°F)

.001 L/R S
.001 L/R F

AVERAGE METER TEMP., T = (460 + $t_{m\,(avg)}$) = _____ °R 546.8

STD GAS METER VOLUME, $V_{m(std)}$ _____ dscf 1.16

$V_{m(std)} = (V_m)\ (¥)\ (17.64\ °R/in.\ Hg)\ (P_{bar}/T_m)$

TOTAL H_2O CATCH, $(W_f - W_i)$ = _____ g 1.4

VOLUME OF H_2O VAPOR CONDENSED, $V_{wc(std)}$ = _____ ft^3 0.7

$V_{wc(std)} = (4.715 \times 10^{-2}\ ft^3/g)\ (W_f - W_i)$

PROPORTION OF H_2O VAPOR (BY VOLUME) IN GAS STREAM, B_{ws} = _____ .05 4.96

$$B_{ws} = \frac{V_{wc(std)}}{V_{wc(std)} + V_{m(std)}} \qquad \%H_2O = B_{ws} \times 100$$

$\%H_2O / (1 - B_{ws})$: _____ / _____

ENTROPY

ALTERNATE METHOD 4 (H_2O) SAMPLING DATA

PLANT/LOCATION Columbia GAS JOB# 20137

SAMPLING LOCATION Compressor STACK

RUN # CS 3 ANALYST GCB DATE 2-17-92

STACK TEMPERATURE 596 °F METER BOX # G4

AMBIENT TEMPERATURE 84 °F METER BOX FACTOR, Y .9888

BAROMETRIC PRESSURE, P_{bar} 29.85 in. Hg

INITIAL TRAIN WEIGHT, W_i 600.3 g FINAL TRAIN WEIGHT, W_f 602.5 g 2.2

CLOCK TIME	DRY GAS METER READING (ft^3)	ROTAMETER SETTING (cfm)	DRY GAS METER TEMPERATURE (°F)	
0	112.268	2	88	.001 L/RS
5	112.500	2	86	.001 L/RF
10	112.728	2	85	
15	112.957	2	85	
20	113.182	2	85	
25	113.408	2	85	
30/off	113.635	2	85	
TOTAL VOLUME = V_m	1.367 (ft^3)	AVG. TEMP. = $t_{m(avg)}$	86 (°F)	

AVERAGE METER TEMP., T = (460 + $t_{m(avg)}$) = _____ °R

STD GAS METER VOLUME, $V_{m(std)}$ _____ dscf

$V_{m(std)}$ = (V_m) (Y) (17.64 °R/in. Hg) (P_{bar}/T_m)

TOTAL H_2O CATCH, (W_f - W_i) = _____ g

VOLUME OF H_2O VAPOR CONDENSED, $V_{wc(std)}$ = _____ ft^3

$V_{wc(std)}$ = (4.715×10^{-2} ft^3/g) (W_f - W_i)

PROPORTION OF H_2O VAPOR (BY VOLUME) IN GAS STREAM, B_{ws} = _____

$$B_{ws} = \frac{V_{wc(std)}}{V_{wc(std)} + V_{m(std)}} \qquad \%H_2O = B_{ws} \times 100$$

$\%H_2O$ / (1 - B_{ws}) : _____ / _____

ENTROPY

AIR FLOW RATE DETERMINATIONS

Plant Name: Columbia Gas — Run No.: CS 3

City/State: Rayne La — Date: 3-17-92

Test Location: Compressor Stack — Personnel: GCB HL

Barometric Pres. (Pbar): 29.80 In. Hg — Static Pres. (Pg): -1.0 In. H_2O

Pitot/Orifice ID: DP-48-4 — Pitot Coef. (Cp): .84 — Pres. Gauge Set ID: MS-8

Thermocouple ID: R 234 — Duct Length/Diameter: 24" — Width: _____

--Specify inches (") or feet (')--

VELOCITY TRAVERSES
Start-Finish Times: _____ - _____

Point No.	ΔP In. H_2O	Temp. °F
A 1	1.40	571
2	1.75	576
3	1.85	585
4	1.75	593
5	1.75	594
6	1.85	596
7	1.85	597
8	165	593
B 1	1.55	582
2	1.75	580
3	1.80	582
4	1.75	585
5	1.75	589
6	1.85	593
7	1.85	595
8	1.90	595
Avg.*	1.75	587.9

$\sqrt{\Delta P} = 1.323$

* ΔP average is square of average square root.

ORSAT DATA

Sampling Time	Analysis Time	CO_2 (A) Reading	O_2 (B) Reading	%O_2 (B-A)	%CO+N_2 (100-B)
	Average				

Bag No. _____ Pump _____

FYRITE DATA, % CO_2				

MOISTURE DATA (WET BULB/DRY BULB)

Port	Time	Dry Bulb °F	Wet Bulb °F	Diff.	% H_2O

MOISTURE DATA (STOICHIOMETRIC)

Free Water in Fuel, %		
Water from Fuel Combustion, %		
Ambient Water, %		
Relative Humidity, %		
Ambient Temperature, °F		
Total %		

VOLUMETRIC AIR FLOW RATES

Dry at Standard Conditions, Qsd = 9269.1 SCFM

Wet at Stack Conditions, Qaw = 19984.9 ACFM

ADDITIONAL DATA

See page 2 for field flow rate calculations.

Sampling and Velocity Traverse Point Determination
EPA Method 1

PLANT NAME: Columbia Gas Transmission
CITY, STATE: Rayne, LA
SAMPLING LOCATION: Gas Turbine

NO. OF PORTS AVAILABLE: 7
NO. OF PORTS USED: 5
PORT INSIDE DIAMETER: 2"

DISTANCE FROM FAR WALL TO OUTSIDE OF PORT: 127.5"
NIPPLE LENGTH AND/OR WALL THICKNESS: 8"
DEPTH OF STACK OR DUCT: 119.5"
STACK OR DUCT WIDTH (IF RECTANGULAR): 116.5"

EQUIVALENT DIAMETER:
$D_E = \frac{2 \times \text{DEPTH} \times \text{WIDTH}}{\text{DEPTH} + \text{WIDTH}} = \frac{2\,(119.5'')\,(116.5'')}{(119.5'' + 116.5'')} = 117.98''$

DISTANCE FROM PORTS TO FLOW DISTURBANCES	UPSTREAM	DOWNSTREAM
	18"	18"
DIAMETERS	0.2	0.2

STACK/DUCT AREA = _____ = 13921.8 IN^2

DRAW HORIZONTAL LINE THROUGH DIAMETERS

If more than 8 and 2 diameters and if duct dia. is less than 24", use 8 or 9 points.

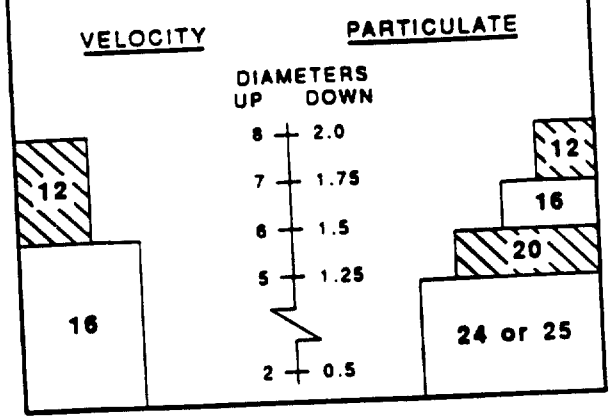

LOCATION OF POINTS IN CIRCULAR STACKS OR DUCTS

	4	6	8	10	12	14	16	18	20	22	24
1	6.7	4.4	3.2	2.6	2.1	1.8	1.6	1.4	1.3	1.1	1.1
2	25.0	14.6	10.5	8.2	6.7	5.7	4.9	4.4	3.9	3.5	3.2
3	75.0	29.6	19.4	14.6	11.8	9.9	8.5	7.5	6.7	6.0	5.5
4	93.3	70.4	32.3	22.6	17.7	14.6	12.5	10.9	9.7	8.7	7.9
5		85.4	67.7	34.2	25.0	20.1	16.9	14.6	12.9	11.6	10.5
6		95.6	80.6	65.8	35.6	26.9	22.0	18.8	16.5	14.6	13.2
7			89.5	77.4	64.4	36.6	28.3	23.6	20.4	18.0	16.1
8			96.8	85.4	75.0	63.4	37.5	29.6	25.0	21.8	19.4
9				91.8	82.3	73.1	62.5	38.2	30.6	26.2	23.0
10				97.4	88.2	79.9	71.7	61.8	38.8	31.5	27.2
11					93.3	85.4	78.0	70.4	61.2	39.3	32.3
12					97.9	90.1	83.1	76.4	69.4	60.7	39.8
13						94.3	87.5	81.2	75.0	68.5	60.2
14						98.2	91.5	85.4	79.6	73.8	67.7
15							95.1	89.1	83.5	78.2	72.8
16							98.4	92.5	87.1	82.0	77.0
17								95.6	90.3	85.4	80.6
18								98.6	93.3	88.4	83.9
19									96.1	91.3	86.8
20									98.7	94.0	89.5
21										96.5	92.1
22										98.9	94.5
23											96.8
24											98.9

LOCATION OF POINTS IN RECTANGULAR STACKS OR DUCTS

	2	3	4	5	6	7	8	9	10	11	12
1	25.0	16.7	12.5	10.0	8.3	7.1	6.3	5.6	5.0	4.5	4.2
2	75.0	50.0	37.5	30.0	25.0	21.4	18.8	16.7	15.0	13.6	12.5
3		83.3	62.5	50.0	41.7	35.7	31.3	27.8	25.0	22.7	20.8
4			87.5	70.0	58.3	50.0	43.8	38.9	35.0	31.8	29.2
5				90.0	75.0	64.3	56.3	50.0	45.0	40.9	37.5
6					91.7	78.6	68.8	61.1	55.0	50.0	45.8
7						92.9	81.3	72.2	65.0	59.1	54.2
8							93.8	83.3	75.0	68.2	62.5
9								94.4	85.0	77.3	70.8
10									95.0	86.4	79.2
11										95.5	87.5
12											95.8

POINT	% OF DUCT DEPTH	DISTANCE FROM INSIDE WALL	DISTANCE FROM OUTSIDE OF PORT
1		7.5	15.5
2		22.5	30.5
3		37.4	45.4
4		52.3	60.3
5		67.3	75.3
6		82.2	90.2
7		97.2	105.2
8		112.0	120.1
9			
10			
11			
12			
13			
14			
15			
16			
17			
18			
19			
20			
21			
22			
23			
24			

SEE REVERSE FOR FIELD USE CHECKLIST

F-0016
10-90

Sampling and Velocity Traverse Point Determination
EPA Method 1

PLANT NAME Columbia GAS
CITY, STATE RAYNE LA.
SAMPLING LOCATION Compressor STACK

NO. OF PORTS AVAILABLE 2
NO. OF PORTS USED 2
PORT INSIDE DIAMETER ~~24"~~ 2"

DISTANCE FROM FAR WALL TO OUTSIDE OF PORT 25½"
NIPPLE LENGTH AND/OR WALL THICKNESS 1½"
DEPTH OF STACK OR DUCT 24"
STACK OR DUCT WIDTH (IF RECTANGULAR) _____

EQUIVALENT DIAMETER:
$D_E = \frac{2 \times \text{DEPTH} \times \text{WIDTH}}{\text{DEPTH} + \text{WIDTH}} = \frac{2(\quad)(\quad)}{(\quad + \quad)} =$ _____

DISTANCE FROM PORTS TO FLOW DISTURBANCES	UPSTREAM	DOWNSTREAM
	40½"	119"
DIAMETERS	1.7	5.0

STACK/DUCT AREA = _____ = 452.4 IN²

LOCATION OF POINTS IN CIRCULAR STACKS OR DUCTS

	4	6	8	10	12	14	16	18	20	22	24
1	6.7	4.4	3.2	2.6	2.1	1.8	1.6	1.4	1.3	1.1	1.1
2	25.0	14.6	10.5	8.2	6.7	5.7	4.9	4.4	3.9	3.5	3.2
3	75.0	29.6	19.4	14.6	11.8	9.9	8.5	7.5	6.7	6.0	5.5
4	93.3	70.4	32.3	22.6	17.7	14.6	12.5	10.9	9.7	8.7	7.9
5		85.4	67.7	34.2	25.0	20.1	16.9	14.6	12.9	11.6	10.5
6		95.6	80.6	65.8	35.6	26.9	22.0	18.8	16.5	14.6	13.2
7			89.5	77.4	64.4	36.6	28.3	23.6	20.4	18.0	16.1
8			96.8	85.4	75.0	63.4	37.5	29.6	25.0	21.8	19.4
9				91.8	82.3	73.1	62.5	38.2	30.6	26.2	23.0
10				97.4	88.2	79.9	71.7	61.8	38.8	31.5	27.2
11					93.3	85.4	78.0	70.4	61.2	39.3	32.3
12					97.9	90.1	83.1	76.4	69.4	60.7	39.8
13						94.3	87.5	81.2	75.0	68.5	60.2
14						98.2	91.5	85.4	79.6	73.8	67.7
15							95.1	89.1	83.5	78.2	72.8
16							98.4	92.5	87.1	82.0	77.0
17								95.6	90.3	85.4	80.6
18								98.6	93.3	88.4	83.9
19									96.1	91.3	86.8
20									98.7	94.0	89.5
21										96.5	92.1
22										98.9	94.5
23											96.8
24											98.9

4.0
12.0
20.0

LOCATION OF POINTS IN RECTANGULAR STACKS OR DUCTS

	2	3	4	5	6	7	8	9	10	11	12
1	25.0	16.7	12.5	10.0	8.3	7.1	6.3	5.6	5.0	4.5	4.2
2	75.0	50.0	37.5	30.0	25.0	21.4	18.8	16.7	15.0	13.6	12.5
3		83.3	62.5	50.0	41.7	35.7	31.3	27.8	25.0	22.7	20.8
4			87.5	70.0	58.3	50.0	43.8	38.9	35.0	31.8	29.2
5				90.0	75.0	64.3	56.3	50.0	45.0	40.9	37.5
6					91.7	78.6	68.8	61.1	55.0	50.0	45.8
7						92.9	81.3	72.2	65.0	59.1	54.2
8							93.8	83.3	75.0	68.2	62.5
9								94.4	85.0	77.3	70.8
10									95.0	86.4	79.2
11										95.5	87.5
12											95.8

DRAW HORIZONTAL LINE THROUGH DIAMETERS

If more than 8 and 2 diameters and if duct dia. is less than 24", use 8 or 9 points.

VELOCITY PARTICULATE

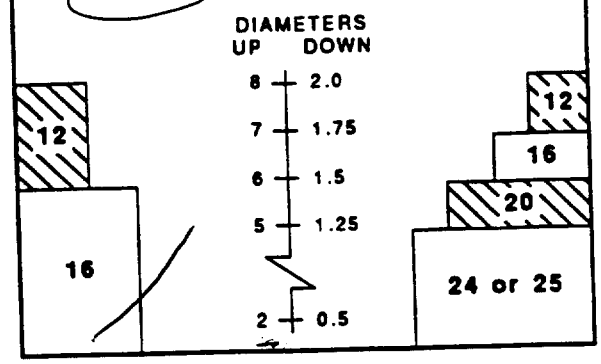

POINT	% OF DUCT DEPTH	DISTANCE FROM INSIDE WALL	DISTANCE FROM OUTSIDE OF PORT
1	3.2	¾	2¼"
2	10.5	2⅕	4"
3	19.4	4⅝	6⅛"
4	32.3	7¾	9¼"
5	67.7	16¼	17¾"
6	80.6	19⅜	20⅞"
7	89.5	21.5	23.0"
8	96.8	23¼	24¾"
9			
10			
11			
12			
13			
14			
15			
16			
17			
18			
19			
20			
21			
22			
23			
24			

SEE REVERSE FOR FIELD USE CHECKLIST

F-0016
10-90

ENTROPY

Appendix D. Reference Measurement System Calibration Bias and Drift Calculations

SYSTEM CALIBRATION BIAS AND DRIFT CALCULATIONS

SOURCE: COLUMBIA GAS / COMPRESSOR 1002

TEST DATE: 3/17/92

RUN NUMBER: COMP-1 (13:15 - 14:15)

SPAN VALUES:
1500 ppm NOx
1000 ppm CO
25 % Oxygen
20 % CO2

		------INITIAL VALUES------		------FINAL VALUES------		
	ANALYZER CAL. RESPONSE	SYSTEM CAL. RESPONSE	SYSTEM CAL. BIAS (% OF SPAN)	SYSTEM CAL. RESPONSE	SYSTEM CAL. BIAS (% OF SPAN)	DRIFT (% OF SPAN)
NOx ZERO GAS	1.0	1.3	0.02	3.9	0.19	0.17
NOx UP-SCALE	837.8	836.4	-0.09	840.0	0.15	0.24
CO ZERO GAS	N/A	0.0	N/A	0.0	N/A	0.00
CO UP-SCALE	N/A	298.4	N/A	295.4	N/A	-0.30
O2 ZERO GAS	0.05	0.06	0.04	0.06	0.04	0.00
O2 UP-SCALE	11.99	11.98	-0.04	11.90	-0.36	-0.32
CO2 ZERO GAS	0.02	0.03	0.05	0.06	0.20	0.15
CO2 UP-SCALE	10.99	10.94	-0.25	10.94	-0.25	0.00

$$\text{SYSTEM CAL. BIAS} = \frac{\text{SYSTEM CAL. RESPONSE} - \text{ANALYZER CAL. RESPONSE}}{\text{SPAN}} \times 100$$

$$\text{DRIFT} = \frac{\text{FINAL SYSTEM CAL. RESPONSE} - \text{INITIAL CAL. RESPONSE}}{\text{SPAN}} \times 100$$

SYSTEM CALIBRATION BIAS AND DRIFT CALCULATIONS

SOURCE: COLUMBIA GAS / COMPRESSOR 1002

TEST DATE: 3/17/92

RUN NUMBER: COMP-2 (14:35 - 15:35)

SPAN VALUES: 1500 ppm NOx
1000 ppm CO
25 % Oxygen
20 % CO2

		------INITIAL VALUES------		------FINAL VALUES------		
	ANALYZER CAL. RESPONSE	SYSTEM CAL. RESPONSE	SYSTEM CAL. BIAS (% OF SPAN)	SYSTEM CAL. RESPONSE	SYSTEM CAL. BIAS (% OF SPAN)	DRIFT (% OF SPAN)
NOx ZERO GAS	1.0	1.3	0.02	3.8	0.19	0.17
NOx UP-SCALE	837.8	836.4	-0.09	838.8	0.07	0.16
CO ZERO GAS	N/A	0.0	N/A	0.0	N/A	0.00
CO UP-SCALE	N/A	295.4	N/A	297.3	N/A	0.19
O2 ZERO GAS	0.05	0.06	0.04	0.09	0.16	0.12
O2 UP-SCALE	11.99	11.98	-0.04	11.95	-0.16	-0.12
CO2 ZERO GAS	0.02	0.03	0.05	0.07	0.25	0.20
CO2 UP-SCALE	10.99	10.94	-0.25	10.93	-0.30	-0.05

$$\text{SYSTEM CAL. BIAS} = \frac{\text{SYSTEM CAL. RESPONSE} - \text{ANALYZER CAL. RESPONSE}}{\text{SPAN}} \times 100$$

$$\text{DRIFT} = \frac{\text{FINAL SYSTEM CAL. RESPONSE} - \text{INITIAL CAL. RESPONSE}}{\text{SPAN}} \times 100$$

SYSTEM CALIBRATION BIAS AND DRIFT CALCULATIONS

SOURCE: COLUMBIA GAS / COMPRESSOR 1002

TEST DATE: 3/17/92

RUN NUMBER: COMP-3 (15:55 - 16:55)

SPAN VALUES: 1500 ppm NOx
1000 ppm CO
25 % Oxygen
20 % CO2

		------INITIAL VALUES------		------FINAL VALUES------		
	ANALYZER CAL. RESPONSE	SYSTEM CAL. RESPONSE	SYSTEM CAL. BIAS (% OF SPAN)	SYSTEM CAL. RESPONSE	SYSTEM CAL. BIAS (% OF SPAN)	DRIFT (% OF SPAN)
NOx ZERO GAS	1.0	1.3	0.02	3.7	0.18	0.16
NOx UP-SCALE	837.8	836.4	-0.09	842.9	0.34	0.43
CO ZERO GAS	N/A	0.0	N/A	0.0	N/A	0.00
CO UP-SCALE	N/A	297.3	N/A	294.0	N/A	-0.33
O2 ZERO GAS	0.05	0.06	0.04	0.08	0.12	0.08
O2 UP-SCALE	11.99	11.98	-0.04	11.94	-0.20	-0.16
CO2 ZERO GAS	0.02	0.03	0.05	0.07	0.25	0.20
CO2 UP-SCALE	10.99	10.93	-0.30	10.90	-0.45	-0.15

$$\text{SYSTEM CAL. BIAS} = \frac{\text{SYSTEM CAL. RESPONSE} - \text{ANALYZER CAL. RESPONSE}}{\text{SPAN}} \times 100$$

$$\text{DRIFT} = \frac{\text{FINAL SYSTEM CAL. RESPONSE} - \text{INITIAL CAL. RESPONSE}}{\text{SPAN}} \times 100$$

SYSTEM CALIBRATION BIAS AND DRIFT CALCULATIONS

SOURCE: COLUMBIA GAS / COMPRESSOR 1010

TEST DATE: 3/18/92

RUN NUMBER: GT-1 (12:58 - 13:14)

SPAN VALUES: 1000 ppm CO
20 % CO2

		------INITIAL VALUES------		------FINAL VALUES------		
	ANALYZER CAL. RESPONSE	SYSTEM CAL. RESPONSE	SYSTEM CAL. BIAS (% OF SPAN)	SYSTEM CAL. RESPONSE	SYSTEM CAL. BIAS (% OF SPAN)	DRIFT (% OF SPAN)
CO ZERO GAS	N/A	0.0	N/A	0.0	N/A	0.00
CO UP-SCALE	N/A	297.4	N/A	297.3	N/A	-0.01
CO2 ZERO GAS	0.00	0.04	0.20	0.04	0.20	0.00
CO2 UP-SCALE	10.98	11.05	0.35	10.89	-0.45	-0.80

$$\text{SYSTEM CAL. BIAS} = \frac{\text{SYSTEM CAL. RESPONSE} - \text{ANALYZER CAL. RESPONSE}}{\text{SPAN}} \times 100$$

$$\text{DRIFT} = \frac{\text{FINAL SYSTEM CAL. RESPONSE} - \text{INITIAL CAL. RESPONSE}}{\text{SPAN}} \times 100$$

SYSTEM CALIBRATION BIAS AND DRIFT CALCULATIONS

SOURCE: COLUMBIA GAS / COMPRESSOR 1010

TEST DATE: 3/18/92

RUN NUMBER: GT-2 (13:24 - 13:40)

SPAN VALUES: 1000 ppm CO
20 % CO2

		------INITIAL VALUES------		------FINAL VALUES------		
	ANALYZER CAL. RESPONSE	SYSTEM CAL. RESPONSE	SYSTEM CAL. BIAS (% OF SPAN)	SYSTEM CAL. RESPONSE	SYSTEM CAL. BIAS (% OF SPAN)	DRIFT (% OF SPAN)
CO ZERO GAS	N/A	0.0	N/A	0.0	N/A	0.00
CO UP-SCALE	N/A	297.3	N/A	297.4	N/A	0.01
CO2 ZERO GAS	0.00	0.04	0.20	0.04	0.20	0.00
CO2 UP-SCALE	10.98	10.89	-0.45	10.88	-0.50	-0.05

$$\text{SYSTEM CAL. BIAS} = \frac{\text{SYSTEM CAL. RESPONSE} - \text{ANALYZER CAL. RESPONSE}}{\text{SPAN}} \times 100$$

$$\text{DRIFT} = \frac{\text{FINAL SYSTEM CAL. RESPONSE} - \text{INITIAL CAL. RESPONSE}}{\text{SPAN}} \times 100$$

SYSTEM CALIBRATION BIAS AND DRIFT CALCULATIONS

SOURCE: COLUMBIA GAS / COMPRESSOR 1010

TEST DATE: 3/18/92

RUN NUMBER: GT-3 (13:51 - 14:07)

SPAN VALUES: 1000 ppm CO
20 % CO2

		------INITIAL VALUES------		------FINAL VALUES------		
	ANALYZER CAL. RESPONSE	SYSTEM CAL. RESPONSE	SYSTEM CAL. BIAS (% OF SPAN)	SYSTEM CAL. RESPONSE	SYSTEM CAL. BIAS (% OF SPAN)	DRIFT (% OF SPAN)
CO ZERO GAS	N/A	0.0	N/A	0.1	N/A	0.01
CO UP-SCALE	N/A	297.4	N/A	295.5	N/A	-0.19
CO2 ZERO GAS	0.00	0.04	0.20	0.05	0.25	0.05
CO2 UP-SCALE	10.98	10.88	-0.50	10.88	-0.50	0.00

$$\text{SYSTEM CAL. BIAS} = \frac{\text{SYSTEM CAL. RESPONSE} - \text{ANALYZER CAL. RESPONSE}}{\text{SPAN}} \times 100$$

$$\text{DRIFT} = \frac{\text{FINAL SYSTEM CAL. RESPONSE} - \text{INITIAL CAL. RESPONSE}}{\text{SPAN}} \times 100$$

Appendix E. Reference Measurement System Performance Tests

- Response Time
- NO_2-to-NO Converter Efficiency
- Interference Test

RESPONSE TIME

TEST DATE 3/17/92

PLANT AND LOCATION COLUMBIA GAS TRANSMISSION - RAYNE, LA.

MONITOR TECO 10 NOx

SERIAL NO. 10S- 35796-253

SPAN GAS CONCENTRATION 11.99% O_2, 837 ppm NOx

MONITOR SPAN SETTING 1500

COMPRESSOR # 1002

UPSCALE RESPONSE

1 22.27 seconds

2 23.42 seconds

3 23.07 seconds

4 _____ seconds

5 _____ seconds

AVG. UPSCALE RESPONSE = 22.92 seconds

DOWNSCALE RESPONSE

1 20.97 seconds

2 20.54 seconds

3 20.61 seconds

4 _____ seconds

5 _____ seconds

AVG. DOWNSCALE RESPONSE = 20.71 seconds

System response time (slower time) = 22.92 seconds

Percent deviation from slower system average response $= \left[\frac{\text{(average upscale) - (average downscale)}}{\text{slower time}}\right] \times 100 =$ _____%

ENTROPY

RESPONSE TIME

TEST DATE 3/18/92

PLANT AND LOCATION COLUMBIA GAS TRANSMISSION - RAYNE, LA.

MONITOR TECO 10 NO_x

SERIAL NO. 105-35796-253

SPAN GAS CONCENTRATION 11.99% O_2, 142.2 ppm NO_x

MONITOR SPAN SETTING 2500

GAS TURBINE #1010

UPSCALE RESPONSE

1 20.26 seconds

2 19.99 seconds

3 19.06 seconds

4 _____ seconds

5 _____ seconds

AVG. UPSCALE RESPONSE = 19.77 seconds

DOWNSCALE RESPONSE

1 19.06 seconds

2 19.87 seconds

3 19.79 seconds

4 _____ seconds

5 _____ seconds

AVG. DOWNSCALE RESPONSE = 19.57 seconds

System response time (slower time) = 19.77 seconds

Percent deviation from slower system average response $= \left[\frac{\text{(average upscale) - (average downscale)}}{\text{slower time}}\right] \times 100 =$ _____%

ENTROPY

INTERFERENCE RESPONSE

Analyzer Type.....TELEDYNE 320P-4 Span..... 25
Serial number.....91516 Date.....4-6-89
EEI #.....7

Gas Type	Concentration	Analyzer response	(a) % of span
CO/N2	439.0 ppm	0.000	0.0000
SO2/N2	216.0 ppm	0.000	0.0000
NO/N2	377.0 ppm	0.000	0.0000
CO2/N2	11.0 %	0.000	0.0000
		(b) Totals	0.0000

(a) % of span = ANALYZER RESPONSE/INSTRUMENT SPAN X 100

(b) SPECIFICATION (EPA METHOD 20): SUM OF INTERFERENCE RESPONSES MUST NOT EXCEED 2% OF SPAN.

INTERFERENCE TEST PROCEDURES

ENTROPY followed the manufacturer's recommended set-up procedures contained in the analyzer manual. After the initial set-up procedures were completed, the electronics of the monitor were adjusted according to the manufacturer's guidelines. The monitor was calibrated by flowing O2 calibration gases into the instrument. The SO2, CO, NOx and CO2 calibration gases listed above were injected into the monitor and the responses were recorded with a data aquisition system, which was analyzed to determine if the gases caused interference (ie. deviations from a zero reading) in the O2 monitor.

NO2-NO CONVERSION EFFICIENCY

Analyzer Type.....TECO 10 NOX EEI#9
Serial number.....10S-35796-253

Span..... 1000
Date.....2/3/92

PEAK RESPONSE RECORDED DURING CONVERTER EFFICIENCY TEST..	104.3 ppm
RESPONSE RECORDED AT THE END OF THE 30-MINUTE TEST.....	103.7 ppm
PERCENT DECREASE FROM PEAK RESPONSE.....	0.58 %
CONVERTER EFFICIENCY.....	99.4 %

SPECIFICATIONS (EPA METHOD 20): RESPONSE AT 30 MINUTES MUST NOT DECREASE BY MORE THAN 2% OF THE PEAK RESPONSE VALUE.

NO2-NO CONVERTER EFFICIENCY TEST PROCEDURES

ENTROPY followed the manufacturer's recommended set-up procedures contained in the analyzer manual. After the initial set-up procedures were completed, the electronics of the monitor were adjusted according to the manufacturer's guidelines. The monitor was then calibrated by flowing NO calibration gases into the instrument. A calibration gas was then diluted (1:1) with purified compressed air. The gas mixture was routed through a manifold into a Tedlar bag, which was previously leak tested and evacuated. This arrangement afforded sufficient volume to allow the sampling system to operate for the required 30 minutes. Immediately after the bag was filled, the manifold was connected to the sampling system. The system was turned on and the analyzer response was recorded on a data aquisition system. The one minute averages from the data aquisition system was analyzed for the peak response and the response at the end of the 30-minute sampling period.

CONVERTER EFFICIENCY CHECK ON TECO MODEL 10 02/03/92
CHAN 15
EEI#9

TIME	ppmNOx
11:41	103.87
11:42	104.14
11:43	104.17
11:44	104.18
11:45	104.20
11:46	104.22
11:47	104.27
11:48	104.22
11:49	104.14
11:50	104.14
11:51	104.18
11:52	104.14
11:53	104.20
11:54	104.13
11:55	104.14
11:56	104.13
11:57	104.09
11:58	104.06
11:59	104.00
12:00	104.01
12:01	103.93
12:02	103.94
12:03	103.99
12:04	104.09
12:05	103.96
12:06	103.96
12:07	103.92
12:08	103.83
12:09	103.84
12:10	103.82

INTERFERENCE RESPONSE

Analyzer Type.....TECO 10S NOX EEI#9
Serial number.....10S-35796-253

Span..... 1000
Date.....2/3/92

Gas Type	Concentration	Analyzer response	(a) % of span
CO/N2	404.0 ppm	0.000	0.0000
SO2/N2	240.0 ppm	0.000	0.0000
CO2/N2	11.06 %	0.000	0.0000
O2/N2	20.9 %	0.000	0.0000
		(b) Totals	0.0000

(a) % of span = ANALYZER RESPONSE/INSTRUMENT SPAN X 100

(b) SPECIFICATION (EPA METHOD 20): SUM OF INTERFERENCE RESPONSES MUST NOT EXCEED 2% OF SPAN.

INTERFERENCE TEST PROCEDURES

ENTROPY followed the manufacturer's recommended set-up procedures contained in the analyzer manual. After the initial set-up procedures were completed, the electronics of the monitor were adjusted according to the manufacturer's guidelines. The monitor was calibrated by flowing NO calibration gases into the instrument. The SO2, CO, CO2 and O2 calibration gases listed above were injected into the monitor and the responses were recorded with a data aquisition system, which was analyzed to determine if the gases caused interference (ie. deviations from a zero reading) in the NOx monitor.

INTERFERENCE RESPONSE

Analyzer Type.....TECO 48 CO
Serial number.....48-32404-241
EEI#..... 4

Span..... 500
Date.....5/9/91

Gas Type	Concentration	Analyzer response	(a) % of span
CO2/N2	11.0 %	0.000	0.0000
NO/N2	470.0 ppm	0.000	0.0000
SO2/N2	454.00 %	3.100	0.6200
O2/N2	20.6 %	0.100	0.0200
		(b) Totals	0.6400

(a) % of span = ANALYZER RESPONSE/INSTRUMENT SPAN X 100

(b) SPECIFICATION (EPA METHOD 20): SUM OF INTERFERENCE RESPONSES MUST NOT EXCEED 2% OF SPAN.

INTERFERENCE TEST PROCEDURES

ENTROPY followed the manufacturer's recommended set-up procedures contained in the analyzer manual. After the initial set-up procedures were completed, the electronics of the monitor were adjusted according to the manufacturer's guidelines. The monitor was calibrated by flowing CO calibration gases into the instrument. The SO2, NOx, CO2 and O2 calibration gases listed above were injected into the monitor and the responses were recorded with a data aquisition system, which was analyzed to determine if the gases caused interference (ie. deviations from a zero reading) in the CO monitor.

INTERFERENCE RESPONSE

Analyzer Type.....FUJI 3300 DUAL RANGE
Serial number.....N1A5217T
EEI #..... 8

Span..... 20
Date.....12/12/91

Gas Type	Concentration	Analyzer response	(a) % of span
CO/N2	437.0 ppm	0.000	0.0000
SO2/N2	240.0 ppm	0.000	0.0000
NO/N2	238.0 ppm	0.000	0.0000
O2/N2	20.9 %	0.000	0.0000
		(b) Totals	0.0000

(a) % of span = ANALYZER RESPONSE/INSTRUMENT SPAN X 100

(b) SPECIFICATION (EPA METHOD 20): SUM OF INTERFERENCE RESPONSES MUST NOT EXCEED 2% OF SPAN.

INTERFERENCE TEST PROCEDURES

ENTROPY followed the manufacturer's recommended set-up procedures contained in the analyzer manual. After the initial set-up procedures were completed, the electronics of the monitor were adjusted according to the manufacturer's guidelines. The monitor was calibrated by flowing CO2 calibration gases into the instrument. The SO2, CO, NOx and O2 calibration gases listed above were injected into the monitor and the responses were recorded with a data aquisition system, which was analyzed to determine if the gases caused interference (ie. deviations from a zero reading) in the CO2 monitor.

Appendix F. Process Information

- Specific Humidity Data
- Process Data
- Fuel Gas Analysis Results

F U E L G A S A N A L Y S I S

COMPANY : COLUMBIA GAS TRANSMISSION
SOURCE : RAYNE COMPRESSOR STATION

DATE : 11/15/91

Temp. Std. = 68 dF

	COMPONENT		MOLE (%)	MW	WEIGHT (%)
PARAFFINS (-anes)	CH4	Methane	96.534	16.043	91.83
	C2H6	Ethane	1.345	30.069	2.40
	C3H8	Propane	0.296	44.096	0.77
	C4H10	Butanes	0.140	58.123	0.48
	C5H12	Pentane	0.052	72.150	0.22
	C6 +	Hexane +	0.088	86.177	0.45
OLEFINS (-enes)	C2H4	Ethylene	0.000	28.054	0.00
	C3H6	Propylene	0.000	42.080	0.00
	C4H8	Butenes	0.000	56.107	0.00
	C5H10	Pentene	0.000	70.134	0.00
AROMATIC SERIES	C6H6	Benzene	0.000	78.113	0.00
	C7H8	Toluene	0.000	92.140	0.00
	C8H16	Xylene	0.000	106.167	0.00
NON - HYDROCARBONS	O2		0.000	31.999	0.00
	N2		0.198	28.013	0.33
	H2		0.000	2.016	0.00
	CO2		1.347	44.010	3.52
	CO		0.000	28.010	0.00
	H2S		0.000	34.080	0.00
	SO2		0.000	64.063	0.00
ELEMENTS	CARBON			1234.81	73.22
	HYDROGEN			402.99	23.90
	NITROGEN			5.55	0.33
	OXYGEN			43.10	2.56
	SULFUR			0.00	0.00

Specific Gravity = 0.5832

GROSS CALORIFIC VALUE

Water saturated =	1003.40 Btu/ft3	@ STANDARD TEMPERATURE & PRESSURE.
Dry Basis =	1021.17 Btu/ft3	
Dry Basis =	22942.44 Btu/lb	

F - FACTOR @ 68 dF

F-Factor = 10e6 [3.64 x (% H) + 1.53 x (% C) + 0.57 x (% S) + 0.14 x (% N) - 0.46 x (% O2)] / (Btu/lb) x [(Tstd + 460) / 528]

= 8,625.55 dscf/MMBtu

C:4

COLUMBIA GAS SYSTEM

ANALYST: L. HADAWAY

GAS ANALYSIS ID NO: 91-0479-

STATION NAME: TEXAS EASTERN INTERCHANGE

STATION NUMBER: 04

SUBMITTED BY: C. MENARD

SAMPLE DATE: 11/15/

PRESS: 830 TEMP: 110.0 H2O: 4.0

TYPE OF SAMPLER: WEIRER SAMPLER

COMPONENTS	MOLE %	B.T.U.
HEXANE+	0.000	4.458
NITROGEN	0.196	0.000
METHANE	96.534	974.704
CARBON DIOXIDE	1.347	0.000
ETHANE	1.345	23.801
PROPANE	0.296	7.448
I-BUTANE	0.073	2.375
N-BUTANE	0.067	2.186
I-PENTANE	0.031	1.241
N-PENTANE	0.021	0.842
TOTALS	100.000	1017.055

THE ABOVE CALCULATIONS ARE @ 14.696 PSIA AND 60/F. (AIR=1)

COMPRESSIBILITY FACTOR: 0.99795

WATER FACTOR: 0.999916

DRY B.T.U. @ 15.025: 1042

NOTES: THE ABOVE B.T.U. HAS BEEN CORRECTED FOR Z.
CALCULATIONS ARE PER G.P.A. 2172-76.
B.T.U. COMPONENT VALUES ARE FROM
G.P.A. 2172-76.

COLUMBIA GAS SYSTEM

ANALYSIS VERIFICATION REPORT FOR: 0479
TEXAS EASTERN INTERCHANGE
MONTH: NOV YEAR: 91
SAMPLE TYPE: WELKER SAMPLER

SAMPLE DATE: 11/15/91
DATE ANALYZED: 11/20/91

Hexane+ Within Range	0.088	RANGE=	0.065	-	0.128
Nitrogen Low	0.198	RANGE=	0.202	-	0.218
Methane Within Range	96.534	RANGE=	96.089	-	96.736
Carbon Dioxide High	1.347	RANGE=	1.054	-	1.324
Ethane Within Range	1.345	RANGE=	1.332	-	1.620
Propane Within Range	0.296	RANGE=	0.264	-	0.425
i-Butane Within Range	0.073	RANGE=	0.065	-	0.110
n-Butane Within Range	0.067	RANGE=	0.057	-	0.103
i-Pentane Within Range	0.031	RANGE=	0.030	-	0.049
n-Pentane Within Range	0.021	RANGE=	0.015	-	0.035
Specific Gravity Within Range	0.584	RANGE=	0.581	-	0.588
BTU Within Range	1042	RANGE=	1041	-	1052
Unnormalized Total Within Range					

Conc of Hexane+	0.088
Conc of Nitrogen	0.198
Conc of Methane	96.534
Conc of Carbon Dioxide	1.347
Conc of Ethane	1.345
Conc of Propane	0.296
Conc of i-Butane	0.073
Conc of n-Butane	0.067
Conc of i-Pentane	0.031
Conc of n-Pentane	0.021
Specific Gravity	0.584
BTU @ 15.025 Dry	1042
Water	4.0
Field Gravity	0.586

ANALYSIS GOOD -- ACCEPT AND UPDATE FILE

SPECIFIC HUMIDITY OBSERVATIONS FOR GAS TURBINE TESTING

PLANT NAME: COLUMBIA GAS TRANSMISSION

LOCATION: RAYNE LA.

DATE	TIME	Twet Deg. F	Tdry Deg. F	Pbar in. Hg	Hobs lb H2O/lb dry air
		IC ENGINE			
3/17/92	1315	67	73	29.90	0.012797
	1330	67	73	29.90	0.012797
Test (1)	1345	66	72	29.90	0.012299
	1400	66	72	29.90	0.012299
	AVG	66.5	72.5	29.90	0.012548
	1435	67	74	29.80	0.012614
	1450	67	74	29.80	0.012614
Test (2)	1505	67	74	29.80	0.012614
	1520	67	74	29.80	0.012614
	AVG	67	74	29.80	0.012614
	1555	67	71	29.80	0.01331
	1610	67	71	29.80	0.01331
Test (3)	1625	67	70	29.80	0.013542
	1640	67	70	29.80	0.013542
	AVG	67	70.5	29.80	0.013426
		GAS TURBINE			
3/18/92	1300	68	72	29.69	0.013867
	1315	68	72	29.69	0.013867
TEATS 1-3	1330	68	72	29.69	0.013867
	1345	68	72	29.69	0.013867
	AVG	68	72	29.69	0.013867

ENTROPY

1010 5-18-42

	HP		Disch. Press.		Fuel Temp.	Fuel Press	Fuel Gas Manifold
	13,123	1:00	852		62	590	127
	13,336	1:05	854	Test 1	63	590	127
13,141	13,088	1:10	854		62	592	127
	13,015	1:15	853		63	593	127
	13,062	1:20	851		63	591	127
	12,892	1:25	851		63	591	127
	13,123	1:30	850	Test 2	63	591	127
12,997	12,952	1:35	852		64	593	127
	13,021	1:40	850		63	592	127
	13,010	1:45	849		63	591	127
12,990	13,003	1:50	850	Test 3	63	591	127
	12,832	1:55	850		63	592	127
	13,115	2:00	850		63	592	127

Finish	2:00 pm	Fuel meter	426841
Start	1:00 pm	Fuel meter	426827 (0000)
			140,000

X 1.092 = 153,000

0000

1.092 X

Rolls Royce
mod. 1533-76G
ser. 37819

UNIT 1002

S/N- 43508

TYPE- C/B · GMWA-8

TIME	HP	INT AIR PRESS	INT AIR TEMP	ENG SPEED	AMB TEMP	KN. TIMING	FUEL FLOW RATE
1:15	2035	5.0" Hg.	106	253	73	9° BTDC	390 MCFD
1:30	N/C	"					
1:45	N/C						
2:00	N/C						
2:15	N/C						
2:30	2040	DITTO					
2:45	N/C						390
3:00	2040						390
3:15	2040	Unit Change Jet #1008					390
3:30	2000		105				
3:45	1990		"				"
4:00	1985		104				
4:15	1985		"				
4:30	1980		103				390
4:45	1980		"				
5:00	1980	5.0" Hg.	103°	253 RPMs	69°	9° BTDC	390

TEST 1

TEST 2

TEST 3

Appendix G. Equipment Calibration and Quality Assurance

- Calibration Gas Certificates of Analysis
- Pre- and Post-Test Meter Box Calibration

NONISOKINETIC METERBOX CALIBRATION

PRETEST ✓ POSTTEST ____

Meterbox No. G-4 Calibrated By P.C. Judd Date 3-4-92

Rockwell Dry Gas Meter			Singer Dry Gas Meter		
MR_I (cf)	MR_F (cf)	ΔP_M* (In. H_2O)	MR_I (l)	MR_F (l)	DGM (In. WC)
99.782	100.375	.4			
99.161	99.752	.8			
100.421	101.022	1.3			

* ΔP_M must be ≤ 2.0 inches of H_2O for Rockwell DGM and ≤ 3.0 for Singer DGM.

Flow Rate (lpm)**	Pbar (In. Hg)	t_{SPR} (°F)	P_{H2O} (In. Hg)	t_M (°F)	V_{SPR} (cf)	Y
1.0	29.82	74	.85	70	.61	.9920
2.0	29.82	74	.85	70	.61	.9954
3.0	29.82	74	.85	70	.61	.9789
					Average Y	.9888

** Spirometer

Prior Test Y 1.0156 Date 12-3-91 % Dev. 2.6 Allowed Dev.: ±5%

MR_I = Initial Dry Gas Meter Reading
MR_F = Final Dry Gas Meter Reading
t_{SPR} = Temperature of Gas in Spirometer
P_{H2O} = Vapor Pressure of H_2O at T_{SPR}
t_M = Dry Gas Meter Temperature

DGM_{WC} = Dry Gas Meter Pressure, In. WC
ΔP_M = Reading from Manometer at DGM Inlet
V_{SPR} = Volume Displaced Within Spirometer
Pbar = Barometric Pressure
Y = Dry Gas Meter Coefficient (Gamma)

For Dry Gas Meter Reading in Cubic Feet per Hour (cfh) (i.e., $DGM_{WC} = 0$):

$$Y = \left[\frac{V_{SPR}}{MR_F - MR_I}\right]\left[1 - \frac{P_{H2O}}{Pbar + \frac{\Delta P_M}{13.6}}\right]\left[\frac{T_M + 460}{T_{SPR} + 460}\right]$$

For Dry Gas Meter Reading in Liters per Minute (lpm):

$$Y = \left[\frac{V_{SPR} / 0.03531}{MR_F - MR_I}\right]\left[1 - \frac{P_{H2O}}{Pbar + \frac{\Delta P_M}{13.6}}\right]\left[\frac{T_M + 460}{T_{SPR} + 460}\right]\left[\frac{Pbar}{Pbar + \frac{DGM_{WC}}{13.6}}\right]$$

R-0008 rev. 2-92

ENTROPY

NONISOKINETIC METERBOX CALIBRATION

PRETEST ____ POSTTEST ✓

Meterbox No. G4 Calibrated By REH Date 3-23-92

Rockwell Dry Gas Meter			Singer Dry Gas Meter		
MR_I (cf)	MR_F (cf)	ΔP_M* (In. H_2O)	MR_I (l)	MR_F (l)	DGM (In. WC)
116.189	116.785	0.5			
114.800	115.397	0.7			
115.46[illegible]	116.063	1.5			

* ΔP_M must be ≤ 2.0 inches of H_2O for Rockwell DGM and ≤ 3.0 for Singer DGM.

Flow Rate (lpm)**	Pbar (In. Hg)	t_{SPR} (°F)	P_{H2O} (In. Hg)	t_M (°F)	V_{SPR} (cf)	Y
1.0	29.35	72	0.79	68	.61	0.9884
2.0	29.35	72	0.79	68	.61	0.9868
3.0	29.35	72	0.79	68	.61	0.9852
					Average Y	0.9868

** Spirometer

Prior Test Y 0.9888 Date 3-4-92 % Dev. 0.2 Allowed Dev.: ±5%

MR_I = Initial Dry Gas Meter Reading
MR_F = Final Dry Gas Meter Reading
t_{SPR} = Temperature of Gas in Spirometer
P_{H2O} = Vapor Pressure of H_2O at T_{SPR}
t_M = Dry Gas Meter Temperature

DGM_{WC} = Dry Gas Meter Pressure, In. WC
ΔP_M = Reading from Manometer at DGM Inlet
V_{SPR} = Volume Displaced Within Spirometer
Pbar = Barometric Pressure
Y = Dry Gas Meter Coefficient (Gamma)

For Dry Gas Meter Reading in Cubic Feet per Hour (cfh) (i.e., DGM_{WC} = 0):

$$Y = \left[\frac{V_{SPR}}{MR_F - MR_I}\right]\left[1 - \frac{P_{H2O}}{Pbar + \frac{\Delta P_M}{13.6}}\right]\left[\frac{T_M + 460}{T_{SPR} + 460}\right]$$

For Dry Gas Meter Reading in Liters per Minute (lpm):

$$Y = \left[\frac{V_{SPR} / 0.03531}{MR_F - MR_I}\right]\left[1 - \frac{P_{H2O}}{Pbar + \frac{\Delta P_M}{13.6}}\right]\left[\frac{T_M + 460}{T_{SPR} + 460}\right]\left[\frac{Pbar}{Pbar + \frac{DGM_{WC}}{13.6}}\right]$$

R-0008 rev. 2-92

ENTROPY

Scott Specialty Gases, Inc.

E. P. A. PROTOCOL CERTIFICATE OF ANALYSIS

Shipped from:
Scott Specialty Gases
Route 611
Plumsteadville, PA 18949
Purchase order :
6591-92-KS

Shipped to:
ENTROPY ENVIRON.
ATTN: KENT SPEARS
PO BOX 12291
RESEARCH TRIANGLE PK
RALEIGH NC 27612
Project No 0135005

Certified per E.P.A. Protocol # 1 Procedure #G1 Section # 3.0.4
Certified accuracy +/- 1 % NIST Traceable

Cylinder number ALM021917 Cylinder pressure 2000 psig. Date of assay: 2/4/92

Component	Certified concentration	Expiration date: 8/4/93
NITRIC OXIDE	141.5 ppm	
OXIDES OF NITROGEN	142.2	
NITROGEN	Balance	

Standard
Type GMIS
Concentration 297.3 ppm
Cylinder # AAL11779L

Analyzer
Make : TECO
Model : 10
Serial number : 9741-111-S
Analytical principle : Chemiluminescence
Date of calibration : 1/10/92

Raw data units:	VOLTS		Concentration of Customer Cylinder
First analysis		1/28/92	
Z1=0.00	R1=8.08	T1=3.81	140.2 ppm
R2=8.06	Z2=0.00	T2=3.83	141.2 ppm
Z3=0.00	T3=3.82	R3=8.04	141.2 ppm
Second analysis:		2/4/92	
Z1=0.00	R1=8.34	T1=3.99	142.2 ppm
R2=8.37	Z2=0.00	T2=4.00	141.9 ppm
Z3=0.00	T3=3.99	R3=8.37	141.8 ppm

Analyst Tony Swanson Approved by Ted Heene
Mark S. Sirinides/Ted Heene

PLUMSTEADVILLE, PENNSYLVANIA / TROY, MICHIGAN / HOUSTON, TEXAS / DURHAM, NORTH CAROLINA
SOUTH PLAINFIELD, NEW JERSEY / FREMONT, CALIFORNIA / WAKEFIELD, MASSACHUSETTS / LONGMONT, COLORADO
BATON ROUGE, LOUISIANA

Scott Specialty Gases, Inc.

E. P. A. PROTOCOL CERTIFICATE OF ANALYSIS

Shipped from:
Scott Specialty Gases
Route 611
Plumsteadville, PA 18949
Purchase order :
660292XS

Shipped to:
ENTROPY ENVIRONMENTALISTS
ATTN: KENT SPEARS/A PAY
PO BOX 12291
RESEARCH TRIANGLE PK
RALEIGH NC 27709
Project No 0135520

Certified per E.P.A. Protocol # 1 Procedure NG1 Section # 3.0.4
Certified accuracy +/- 1 % NIST Traceable

Cylinder number AAL16606 Cylinder pressure 2000 psig. Date of assay: 2/26/92

Component	Certified concentration	Expiration date: 8/26/93
NITRIC OXIDE	238 ppm	
OXIDES OF NITROGEN	238	
NITROGEN	Balance	

Standard	1st analy. / 2nd analy.	Analyzer	
Type	GMIS / GMIS	Make	: TECO
Concentration	252.2 / 274.3 ppm	Model	: 10
Cylinder #	ALM024289 / AAL5636	Serial number	: 9741-111-S
		Analytical principle	: Chemiluminescence
		Date of calibration	: 1/10/92

Raw data units:	VOLTS		Concentration of Customer Cylinder
First analysis		2/18/92	
Z1=0.00	R1=6.82	T1=6.48	240 ppm
R2=6.82	Z2=0.00	T2=6.49	240 ppm
Z3=0.00	T3=6.49	R3=6.81	241 ppm
Second analysis:		2/26/92	
Z1=0.00	R1=7.69	T1=6.61	236 ppm
R2=7.69	Z2=0.00	T2=6.65	237 ppm
Z3=0.00	T3=6.68	R3=7.73	237 ppm

Analyst: Approved by Mark S. Sirinides/Ted Neeme

PLUMSTEADVILLE, PENNSYLVANIA / TROY, MICHIGAN / HOUSTON, TEXAS / DURHAM, NORTH CAROLINA
SOUTH PLAINFIELD, NEW JERSEY / FREMONT, CALIFORNIA / WAKEFIELD, MASSACHUSETTS / LONGMONT, COLORADO
BATON ROUGE, LOUISIANA

Scott Specialty Gases, Inc.

E. P. A. PROTOCOL CERTIFICATE OF ANALYSIS

Shipped from:
Scott Specialty Gases
Route 611
Plumsteadville, PA 18949
Purchase order :
06614-BH9L

Shipped to:
ENTROPY ENVIRONMENTALISTS
PO BOX 12291
RESEARCH TRIANGLE PARK, NC 27709
ATTN: SCOTT SHAMBLIN

Project No 35876

Certified per E.P.A. Protocol # 1 Procedure #G1 Section # 3.0.4
Certified accuracy +/- 1 % NIST Traceable

Cylinder number ALM017441 Cylinder pressure 2000 psig. Date of assay: 3-6-92

Expiration date: 9-6-93

Component	Certified concentration
NITRIC OXIDE	836 ppm
OXIDES OF NITROGEN	837
NITROGEN	Balance

Standard
Type GMIS
Concentration 908.7 ppm
Cylinder # ALM005092

Analyzer
Make : TECO
Model : 10
Serial number : 9741-111-S
Analytical principle : Chemiluminesence
Date of calibration : 1-13-92

Raw data units: VOLTS

First analysis 2-28-92			Concentration of Customer Cylinder
Z1=0.0000	R1=7.9870	T1=7.2700	829 ppm
R2=7.9740	Z2=0.0000	T2=7.3550	838 ppm
Z3=0.0000	T3=7.3440	R3=7.9600	838 ppm

Second analysis: 3-6-92			
Z1=0.0000	R1=7.6720	T1=7.2500	837 ppm
R2=7.9080	Z2=0.0000	T2=7.2820	837 ppm
Z3=0.0000	T3=7.2730	R3=7.9170	835 ppm

Analyst A. Rojas

Approved by
Mark S. Sirinides/Ted Neene

Scott Specialty Gases, Inc.

E. P. A. PROTOCOL CERTIFICATE OF ANALYSIS

Shipped from:
Scott Specialty Gases
Route 611
Plumsteadville, PA 18949
Purchase order :
06614-BH9L

Shipped to:
ENTROPY ENVIRONMENTALISTS
P.O. BOX 12291
RESEARCH TRIANGLE PARK, NC 27709
ATTN: SCOTT SHANKLIN

Project No 35876

Section # 3.0.4

Certified per E.P.A. Protocol # 1 Procedure #G1
Certified accuracy +/- 1 % NIST Traceable

Cylinder number AAL16150

Cylinder pressure 2000 psig.

Date of assay: 3-6-92

Expiration date: 9-6-93

Component	Certified concentration
NITRIC OXIDE	1205 ppm
OXIDES OF NITROGEN	1205
NITROGEN	Balance

	1st analy.	/ 2nd analy.
Standard Type	CMIS	/ CMIS
Concentration	1554	/ 2611 ppm
Cylinder #	AAL6235	/ AAL14479

Analyzer
Make : TECO
Model : 10
Serial number : 9741-111-3
Analytical principle : Chemiluminesence
Date of calibration : 1-14-92

Raw data units:	VOLTS		Concentration of Customer Cylinder
First analysis	2-28-92		
Z1=0.0000	R1=4.2250	T1=3.2840	1208 ppm
R2=4.2180	Z2=0.0000	T2=3.2850	1210 ppm
Z3=0.0000	T3=3.2840	R3=4.2240	1206 ppm
Second analysis:	3-6-92		
Z1=0.0000	R1=8.0880	T1=3.7340	1206 ppm
R2=8.1000	Z2=0.0000	T2=3.7150	1198 ppm
Z3=0.0000	T3=3.7140	R3=8.1030	1197 ppm

Analyst [signature]

Approved by [signature]
Mark S. Sirinides/Ted Neene

Scott Specialty Gases, Inc.

E. P. A. PROTOCOL CERTIFICATE OF ANALYSIS

Shipped from:
Scott Specialty Gases
Route 611
Plumsteadville, PA 18949
Purchase order :
06614-BH9L

Shipped to:
ENTROPY ENVIRONMENTALISTS
PO BOX 12291
RESEARCH TRIANGLE PARK, NC 27709
ATTN: SCOTT SHANKLIN

Project No 35876

Certified per E.P.A. Protocol # 1 Procedure #G1
Certified accuracy +/- 1 % NIST Traceable

Section # 3.0.4

Cylinder number AAL8994

Cylinder pressure 2000 psig.

Date of assay: 3-6-92

Expiration date: 9-6-93

Component	Certified concentration
NITRIC OXIDE	2170 ppm
OXIDES OF NITROGEN	2170
NITROGEN	Balance

Standard
Type GMIS
Concentration 2611 ppm
Cylinder # AAL14479

Analyzer
Make : TECO
Model : 10
Serial number : 9741-111-5
Analytical principle : Chemiluminesence
Date of calibration : 1-14-92

Raw data units: VOLTS

First analysis 2-28-92

			Concentration of Customer Cylinder
Z1=0.0000	R1=7.0670	T1=5.9080	2183 ppm
R2=7.1080	Z2=0.0000	T2=5.9190	2174 ppm
Z3=0.0000	T3=5.9190	R3=7.0900	2180 ppm

Second analysis: 3-6-92

Z1=0.0000	R1=8.1150	T1=6.7410	2169 ppm
R2=8.1260	Z2=0.0000	T2=6.7470	2168 ppm
Z3=0.0000	T3=6.7480	R3=8.1210	2169 ppm

Analyst R Rojas

Approved by Mark S. Sirinides/Ted Neeme

Scott Specialty Gases, Inc.

PLUMSTEADVILLE, PA 18949 PHONE: 215-766-8861 FAX: 215-766-0320

ENTROPY ENVIRONMENTALISTS

Date Shipped 3-25-91
Our Project No: 26780
Your P.O. No: 3968-91KS
Page 3 of 7

CERTIFICATE OF ANALYSIS – EPA PROTOCOL GASES*

(Concentrations are in mole % or ppm)

Cylinder Number AAL - 13741 CP = 2000 psig

Certified Accuracy ±1 % NBS Traceable

Analysis Dates: First 3-13-91 Last 3-20-91

COMPONENTS	CERTIFIED CONC	EXPIRATION DATE	ANALYTICAL PRINCIPLE	PRIMARY STANDARD NBS/SRM's	REPLICATE CONCENTRATIONS FIRST	REPLICATE CONCENTRATIONS SECOND
CARBON MONOXIDE	301 ppm	9-20-92	NDIR	1680b/1681	300.7 ppm	300.7 ppm
					299.7 ppm	300.6 ppm
					300.7 ppm	300.7 ppm
NITROGEN	BALANCE					

Cylinder Number

Certified Accuracy % NBS Traceable

Analysis Dates: First Last

COMPONENTS	CERTIFIED CONC	EXPIRATION DATE	ANALYTICAL PRINCIPLE	PRIMARY STANDARD NBS/SRM's	REPLICATE CONCENTRATIONS FIRST	REPLICATE CONCENTRATIONS SECOND

*We hereby certify the cylinder gas has been analyzed according to EPA Protocol No: 1 Procedure G1

Analyst Kristine Kirsch

Approved By Mark S. Sirinides
MARK S. SIRINIDES

The only liability of this Company for gas which fails to comply with this analysis shall be replacement thereof by the Company without extra cost.

CERTIFIED REFERENCE MATERIALS ■ EPA PROTOCOL GASES ■ ACUBLEND® ■ CALIBRATION & SPECIALTY GAS MIXTURES
PURE GASES ■ ACCESSORY PROD S ■ CUSTOM ANALYTICAL SERVICES
TROY, MICHIGAN / SAN BERNARDINO, CALIFORNIA / HOUSTON, TEXAS
SOUTH PLAINFIELD, NEW JERSEY / FREMONT, CALIFORNIA / WAKEFIELD, MASSACHUSETTS / LONGMONT, COLORADO

Scott Specialty Gases, Inc.

E. P. A. PROTOCOL CERTIFICATE OF ANALYSIS

Shipped from:
Scott Specialty Gases
Route 611
Plumsteadville, PA 18949
Purchase order :
6591-92-KS

Shipped to:
ENTROPY ENVIRON.
ATTN: KENT SPEARS
PO BOX 12291
RESEARCH TRIANGLE PK
RALEIGH NC 27612
Project No 0135005

Certified per E.P.A. Protocol # 1 Procedure #G1 Section # 3.0.4
Certified accuracy +/- 1 % NIST Traceable

Cylinder number ALM-002696 Cylinder pressure 2000 psig. Date of assay: 2/4/92

Component
CARBON MONOXIDE
NITROGEN

Certified concentration
594 ppm
Balance

Expiration date: 8/4/93

Standard	1st analy.	/ 2nd analy.	Analyzer	
Type	GMIS	/ CRM1680	Make	: HORIBA
Concentration	751	/ 475 ppm	Model	: CFA-310A
Cylinder #	AAL-9228	/ AAL12858	Serial number	: 474091
			Analytical principle	: NDIR
			Date of calibration	: 1/26/92

Raw data units:	VOLTS		Concentration of Customer Cylinder
First analysis		1/27/92	
Z1=0.00	R1=0.789	T1=0.674	592 ppm
R2=0.789	Z2=0.00	T2=0.674	592 ppm
Z3=0.00	T3=0.674	R3=0.790	591 ppm
Second analysis:		2/4/92	
Z1=0.00	R1=0.574	T1=0.676	596 ppm
R2=0.574	Z2=0.00	T2=0.676	596 ppm
Z3=0.00	T3=0.676	R3=0.574	597 ppm

Analyst _____ Approved by _____
Mark S. Sirinides/Ted Neeme

PLUMSTEADVILLE, PENNSYLVANIA / TROY, MICHIGAN / HOUSTON, TEXAS / DURHAM, NORTH CAROLINA
SOUTH PLAINFIELD, NEW JERSEY / FREMONT, CALIFORNIA / WAKEFIELD, MASSACHUSETTS / LONGMONT, COLORADO
BATON ROUGE, LOUISIANA

Scott Specialty Gases, Inc.

E. P. A. PROTOCOL CERTIFICATE OF ANALYSIS

Shipped from:
Scott Specialty Gases
Route 611
Plumsteadville, PA 18949
Purchase order :
6591-92-KS

Shipped to:
ENTROPY ENVIRON.
ATTN: KENT SPEARS
PO BOX 12291
RESEARCH TRIANGLE PK
RALEIGH NC 27612
Project No 0135005

Certified per E.P.A. Protocol # 1 Procedure #G1 Section # 3.0.4
Certified accuracy +/- 1 % NIST Traceable

Cylinder number	ALM-002696	Cylinder pressure 2000 psig.		Date of assay:	2/4/92
Component		Certified concentration		Expiration date:	8/4/93
CARBON MONOXIDE		594	ppm		
NITROGEN		Balance			

Standard	1st analy.	/ 2nd analy.	Analyzer	
Type	GMIS	/ CRM1680	Make	: HORIBA
Concentration	751	/ 475 ppm	Model	: CFA-310A
Cylinder #	AAL-9228	/ AAL12858	Serial number	: 474091
			Analytical principle	: NDIR
			Date of calibration	: 1/26/92

Raw data units:		VOLTS		Concentration of Customer Cylinder	
First analysis		1/27/92			
Z1=0.00	R1=0.789	T1=0.674		592	ppm
R2=0.789	Z2=0.00	T2=0.674		592	ppm
Z3=0.00	T3=0.674	R3=0.790		591	ppm
Second analysis:		2/4/92			
Z1=0.00	R1=0.574	T1=0.676		596	ppm
R2=0.574	Z2=0.00	T2=0.676		596	ppm
Z3=0.00	T3=0.676	R3=0.574		597	ppm

Analyst Tony Sassaman Approved by Ted Neeme
Mark S. Sirinides/Ted Neeme

PLUMSTEADVILLE, PENNSYLVANIA / TROY, MICHIGAN / HOUSTON, TEXAS / DURHAM, NORTH CAROLINA
SOUTH PLAINFIELD, NEW JERSEY / FREMONT, CALIFORNIA / WAKEFIELD, MASSACHUSETTS / LONGMONT, COLORADO
BATON ROUGE, LOUISIANA

Scott Specialty Gases, Inc.

E.P.A. PROTOCOL CERTIFICATE OF ANALYSIS

Shipped from:
Scott Specialty Gases
Route 611
Plumsteadville, PA 18949
Purchase order 66029KS

Shipped to:
Entrophy

8724 Glenwood Avenue
Raleigh, NC 27612-9055
Project number 35520

Certified per E.P.A. Protocol #1 Procedure #G1 Section number 3.0.4
Certified accuracy +/- 1% NIST traceable

Cylinder number	Cylinder pressure	Date of assay
ALM028318	1950 p.s.i.g.	02-18-1992

Component	Certified concentration	Expiration date
Oxygen	11.99 %	8-18-1993
Nitrogen	Balance gas	

Standard
Type : CRM2652
Concentration : 10.08 %
Cylinder number : AAL18581

Analyzer
Make : BECKMAN O2
Model : 755
Serial number : 2002452
Analytical principle : PARAMAGNETIC
Date of calibration : 02-12-1992

Raw data units VOLT	Drift Compensation	Concentration of customer cylinder	Calibration curve equations
			X = T/10^XFACTOR
			Y = E*X^4+D*X^3+C*X^2+B*X
			Conc = (Y*K+A)*10^YFACTOR
First analysis 02-18-1992			
Z=0.00214 R=0.37879 T=0.45303	K= 99892.391	12.06 %	A= -.0001807306
R=0.38107 Z=0.00247 T=0.45214	K= 99292.109	11.96 %	B= 2.664007
Z=0.00228 T=0.45215 R=0.38092	K= 99331.859	11.96 %	C= 0
			D= 0
Second Analysis Not Required			E= 0
			X FACTOR = 0
Z=0.00000 R=0.00000 T=0.00000	K= 0.000	0.00 %	Y FACTOR = 5
R=0.00000 Z=0.00000 T=0.00000	K= 0.000	0.00 %	
Z=0.00000 T=0.00000 R=0.00000	K= 0.000	0.00 %	

Analyst J Warren
Jay Warren 02-18-1992

Approved by Mark S. Sirinides
Mark S. Sirinides / Ted Neeme

PLUMSTEADVILLE, PENNSYLVANIA / TROY, MICHIGAN / HOUSTON, TEXAS / DURHAM, NORTH CAROLINA
SOUTH PLAINFIELD, NEW JERSEY / FREMONT, CALIFORNIA / WAKEFIELD, MASSACHUSETTS / LONGMONT, COLORADO
BATON ROUGE, LOUISIANA

Scott Specialty Gases, Inc.

E.P.A. PROTOCOL CERTIFICATE OF ANALYSIS

Invoice from:
Scott Specialty Gases
Route 611
Plumsteadville, PA 18949
Purchase order #
[illegible]-91-X5

Shipped to:
ENTROPY ENVIRONMENTALISTS
ATTN: KEN SPEARS
P.O. BOX 12291
RALEIGH, NC 27612

Project no [illegible]

Certified per E.P.A. Protocol # 1 Procedure #G1 Section # [illegible]
Certified accuracy +/- [illegible] % NIST Traceable

Cylinder number ALM-021751 Cylinder pressure 2000 psig Date of assay: 9-10-91

Expiration date: 3-10-93

Component	Certified concentration
OXYGEN	20.5 %
NITROGEN	Balance

Standard
Type CMIS
Concentration 20.87 %
Cylinder # [illegible]

Analyzer
Make : BECKMAN
Model : 755
Serial number : 2102571
Analytical principle : Paramagnetic
Date of calibration : 8-30-91

Raw data units: VOLTS

Analysis 9-10-91

			Concentration of Customer Cylinder
Z1=0.0000	R1=0.7685	T1=0.7564	20.5 %
R2=0.7689	Z2=0.0000	T2=0.7562	20.5 %
Z3=0.0000	T3=0.7562	R3=0.7688	20.5 %

Analyst Christine Rush

Approved by Ted Leeme
Mark S. Sirinides/Ted Leeme

PLUMSTEADVILLE, PENNSYLVANIA / TROY, MICHIGAN / HOUSTON, TEXAS / DURHAM, NORTH CAROLINA
SOUTH PLAINFIELD, NEW JERSEY / FREMONT, CALIFORNIA / WAKEFIELD, MASSACHUSETTS / LONGMONT, COLORADO
BATON ROUGE, LOUISIANA

Scott Specialty Gases, Inc.

E. P. A. PROTOCOL CERTIFICATE OF ANALYSIS

Shipped from:
Scott Specialty Gases
Route 611
Plumsteadville, PA 18949
Purchase order :
5401-91-KS

Shipped to:
ENTROPY ENVIRONMENTALISTS
ATTN: KENT SPEARS
ACCOUNTS PAYABLE
6724 GLENWOOD AVE
RALEIGH, NC 27612
Project No 0133982

Certified per E.P.A. Protocol # 1 Procedure #G1 Section # 3.0.4
Certified accuracy +/- 1 % NIST Traceable

Cylinder number ALM024196

Cylinder pressure
2000 psig.

Date of assay: 12/10/91

Expiration date: 6/10/93

Component	Certified concentration
CARBON DIOXIDE	11.00 %
NITROGEN	Balance

Standard
Type GMIS
Concentration 12 %
Cylinder # A-2710

Analyzer
Make : PERKIN-ELMER
Model : SIGMA 3B
Serial number : 002490700023
Analytical principle : TCD
Date of calibration : 10/15/91

Raw data units:	AREA		Concentration of Customer Cylinder
Analysis	12/10/91		
Z1=0.00000	R1=30887	T1=28335	11.01 %
R2=30816	Z2=0.00000	T2=28192	10.98 %
Z3=0.00000	T3=28253	R3=30772	11.02 %

Analyst: [signature]

Approved by [signature]
Mark S. Sirinides/Ted Neeme

PLUMSTEADVILLE, PENNSYLVANIA · TROY, MICHIGAN / HOUSTON, TEXAS / DURHAM, NORTH CAROLINA
SOUTH PLAINFIELD, NEW JERSEY · FREMONT, CALIFORNIA / WAKEFIELD, MASSACHUSETTS / LONGMONT, COLORADO
BATON ROUGE, LOUISIANA

Scott Specialty Gases, Inc.

E. P. A. PROTOCOL CERTIFICATE OF ANALYSIS

Shipped from:
Scott Specialty Gases
Route 611
Plumsteadville, PA 18949
Purchase order :
5381-91-KS

Shipped to:
ENTROPY
8724 GLENWOOD AVE
RALEIGH, NC 27612

Project No 0133576

Certified per E.P.A. Protocol # 1 Procedure #G1 Section # 3.0.4
Certified accuracy +/- 1 % NIST Traceable

Cylinder number	AAL-15739	Cylinder pressure 1900 psig.		Date of assay:	11/25/91
Component		Certified concentration		Expiration date:	5/25/93
CARBON DIOXIDE		17.47 %			
NITROGEN		Balance			

Standard		Analyzer	
Type	GMIS	Make	: PERKIN-ELMER
Concentration	13.98 %	Model	: SIGMA 3B
Cylinder #	A-2220	Serial number	: 002490700023
		Analytical principle	: TCD
		Date of calibration	: 10/15/91

Raw data units:	AREA			Concentration of Customer Cylinder
Analysis	11/25/91			
Z1=0.00000	R1=28449	T1=35580		17.48 %
R2=28543	Z2=0.00000	T2=35656		17.46 %
Z3=0.00000	T3=35705	R3=28558		17.48 %

Analyst [signature]

Approved by [signature]
Mark S. Sirinides/Ted Neeme

PLUMSTEADVILLE, PENNSYLVANIA / TROY, MICHIGAN / HOUSTON, TEXAS / DURHAM, NORTH CAROLINA
SOUTH PLAINFIELD, NEW JERSEY / FREMONT, CALIFORNIA / WAKEFIELD, MASSACHUSETTS / LONGMONT, COLORADO
BATON ROUGE, LOUISIANA

Appendix H. EPA Test Methods and Specifications

- EPA Methods 1, 2, 3A, 7E, 10, 19, 20, and Alternate Method 4
- Performance Specifications 3 and 4
- Subpart GG