State of New Jersey
DEPARTMENT OF ENVIRONMENTAL PROTECTION
DIVISION OF ENVIRONMENTAL QUALITY
Bureau of Technical Services
CN 411
Trenton, N.J. 08625-0411
(609) 530-4041

March 11, 1991

MEMORANDUM

TO: Chief, Bureau of Enforcement Operations

THROUGH: Edward Choromanski

FROM: Michael Pratt MP

SUBJECT: Algonquin Gas Transmission Company
APC Plant ID No. 25157
NJ Stack Nos. 001 and 002
P/CT Nos. 75952 and 75953
Log Nos. 85-0654 and 85-0655

Emission tests were conducted at the above referenced facility on two gas turbines (GT-1 and GT-2 Solar Turbines International).

The purpose of these tests was to determine:

1) CO, THC (as C_3H_8) and NO_x (as NO) emissions and then to compare the emission results for each air contaminant to the P/CT Nos: 75952 and 75953 allowables.

2) Compliance with USEPA, NSPS 40 CFR, Part 60, Subpart GG (Stationary Gas turbines).

Richelle Burkeen reviewed the submitted test report. Her review indicated the following:

1) GT-1 "Solar Turbine International" was operating during stack testing at 65% to 104% of its maximum capacity.

2) GT-2 "Solar Turbine International" was operating during stack testing at 102 to 105% of its maximum capacity.

3) Both "Solar" gas turbines emissions were in compliance with USEPA NSPS 40 CFR, Part 60, Subpart GG (Stationary Gas Turbines).

New Jersey is an Equal Opportunity Employer
Recycled Paper

4) CO, THC (as C_3H_8), and NO_x (as NO) emissions were within P/CT Nos. 75952 and 75953 allowables.

CONCLUSIONS:

1) Compliance with P/CT No. 75952 and 75953.

2) Compliance with USEPA, NSPS 40 CFR, Part 60, Subpart GG.

RECOMMENDATION:

P/CT Nos. 75952 and 75953 can be changed to permanent status pending approval by NRO.

c: Milton Polakovic
Lou Mikolajczyk
Michael Papp
Richelle Burkeen

State of New Jersey
DEPARTMENT OF ENVIRONMENTAL PROTECTION
DIVISION OF ENVIRONMENTAL QUALITY
Bureau of Technical Services
CN 411
Trenton, N.J. 08625-0411
(609) 530-4041

February 15, 1991

MEMORANDUM

TO: Michael Pratt

FROM: Richelle Burkeen RSB

SUBJECT: Algonquin Gas Transmission Company
Hanover, New Jersey
APC ID No. 25153
NJ Stack No. 001 and 002
P/CT No. 075952 and 075953

The above referenced facility was tested on November 13 and 14, 1990 for nitrogen oxide, carbon monoxide, and total hydrocarbon emissions. Gas turbines one and two were the sources of these emissions. TRC Environmental Consultants, Inc. of East Hartford, Connecticut conducted the emission tests and the results are as follows.

STACK 001

	Run 1	Run 2	Run 3	Allowable
Carbon Monoxide				
ppm	8.5	8.7	10.7	
ppm @7% O2	29.8	42.0	39.4	
lb/hr	1.39	1.27	1.58	7.9
Total Hydrocarbons (as C_3H_8)				
ppm	<0.1	2.5	<0.1	
ppm @7% O2	<0.35	12.1	<0.37	
lb/hr	<0.03	0.64	<0.02	2.3
Nitrogen Oxide (as NO)				
ppm	78.9	55.1	85.6	
ppm @15% O2	119.0	116.1	136.5	160*
ppm @15% O2 & ISO	112.6	114.9	126.9	
lb/hr	13.8	8.64	13.6	17.4

New Jersey is an Equal Opportunity Employer
Recycled Paper

STACK 002

	Run 1	Run 2	Run 3	Allowable
Carbon Monoxide				
ppm	8.2	9.7	9.2	
ppm @7% O2	33.8	34.8	33.0	
lb/hr	1.44	1.70	1.61	7.9
Total Hydrocarbons (as C_3H_8)				
ppm	<0.1	<0.1	<0.1	
ppm @7% O2	<0.41	<0.36	<0.36	
lb/hr	<0.023	<0.025	<0.025	2.3
Nitrogen Oxide (as NO)				
ppm	67.3	76.8	76.3	
ppm @15% O2	120.3	119.2	118.5	160*
ppm @15% O2 & ISO	115.7	112.9	109.9	
lb/hr	10.5	13.1	13.0	17.4

"<" denotes emissions below detection limit

* - Allowable as per NSPS Subpart GG, Standards for Stationary Gas Turbines.

Technical Services calculations of the raw data supplied indicate substantially the same results. The results indicate that mass emission rates for carbon monoxide, total hydrocarbons, and nitrogen oxide are within the allowables as per P/CT No. 075952 and 075953. Nitrogen oxide emissions also are in compliance with subpart GG, for mass concentrations at 15% O_2.

The operating conditions of the turbines is as follows:

	Turbine 1 Run 1	Run 2	Run 3
Fuel Flow (MMBTU/HR)	40	32	31
Combustor Inlet Pressure (PSIG)	122	93	122
Operating Load (HP)	3980	2522	3873

TURBINE 2

	RUN 1	RUN 2	RUN 3
Fuel Flow (MMBTU/HR)	41	41	41
Combustor Inlet Pressure (PSIG)	124	123	122
Operating Load (HP)	4011	3940	3918

The turbine engines are two 3830 hp engines. Therefore, turbine one operated at 65-104% of maximum capacity and turbine two operated at 102-105% of maximum capacity.

RECEIVED
DEC 10 1990
N.J. DEP. - DEQ - AQE&T

AIR POLLUTANT COMPLIANCE TEST REPORT
STATIONARY GAS TURBINES 001 AND 002
ALGONQUIN GAS TRANSMISSION COMPANY
HANOVER COMPRESSOR STATION
HANOVER, NEW JERSEY

Prepared By:

John D. DeGirolamo
Associate Environmental Scientist

TRC Project No. 7638-E31

November, 1990

TRC
Environmental Consultants, Inc.

800 Connecticut Boulevard
East Hartford, CT 06108

(203) 289-8631

A TRC Company

TABLE OF CONTENTS

		Page
1.0	INTRODUCTION	1
2.0	SUMMARY AND DISCUSSION OF RESULTS	2
	2.1 Gaseous Pollutant Emissions	2
	2.2 Oxides of Nitrogen Emissions	2
3.0	PROCESS DESCRIPTION	8
4.0	SAMPLING AND ANALYTICAL METHODS	9
	4.1 Continuous Emission Monitoring of CO, CO2, and O2	9
	4.2 Nitrogen Oxides	12
	4.3 EPA Method 4	17
	4.4 Flowrate Measurements	18
5.0	QUALITY ASSURANCE	
	5.1 Methods 1,2, and 4	20
	5.2 CEM System	20
	5.3 EPA Method 20 Performance Checks	21

TABLES

2-1	Summary of Measured Air Pollutants Turbine No. 1	4
2-2	Summary of Measured Air Pollutants Turbine No. 2	5
2-3	Summary of Measured Nitrogen Oxide Emissions Turbine No. 1	6
2-4	Summary of Measured Nitrogen Oxide Emissions Turbine No. 2	7

FIGURES

4-1	Continuous Emission Monitoring System Schematic	10
4-2	Moisture Sampling Train	16
4-3	EPA Method 1	19

1.0 INTRODUCTION

TRC Environmental Consultants, Inc. of East Hartford, Connecticut was retained by Algonquin Gas Transmission Company of Boston, Massachusetts, to perform a compliance emission test program at their Hanover, New Jersey facility. This test program was performed for the renewal of Algonquin's permits to operate their two gas turbines located at the Hanover compressor station. The parameters measured for compliance were nitrogen oxides, carbon monoxide, and total hydrocarbons. Three tests were run on each turbine.

The test program began with testing on Turbine No. 1 on November 13, 1990 with the turbine running at or near 100% of capacity. After the second test, there was no demand for natural gas and the compressor's bypass system could not facilitate running at 100%. Therefore, only two tests were completed that day. The third test for the Turbine No. 1 was completed after three tests were performed on Turbine No. 2 on November 14, 1990. The test program was performed by John DeGirolamo, Scott Neumann and Andrew Bykowski of TRC. Testing was coordinated by Nelson Strauch of Algonquin. Present to observe the test program were Howard Blostein and Frank Papp from the New Jersey Department of Environmental Protection (NJDEP).

Section 2.0 of this report presents the summary and discussion of results. The process description is given in Section 3.0 and the sampling and analytical methods are explained in Section 4.0. Section 5.0 outlines TRC's quality assurance program.

2.0 SUMMARY AND DISCUSSION OF RESULTS

The results are reported in two major sections. The first presents the sample and stack conditions and the New Jersey Air Test Method 3 pollutant emissions. The second section presents the ambient weather conditions and the results of the oxides of nitrogen testing. All supporting calculations can be found in Appendix E.

2.1 Gaseous Pollutant Emissions

The NJDEP required that the measurement of total hydrocarbons (THC) and carbon monoxide (CO) be performed in this sampling program. These pollutants were measured from both turbine's exhausts, the results of which are summarized in Table 2-1. The results for Turbine No. 1 showed an average concentration 9.3 ppm with an average emission rate of 1.41 lb/hr for CO. The total hydrocarbon concentration averaged 0.93 ppm as propane with an average emission rate of 0.23 lb/hr. Only one of the three tests on this turbine yielded a detectable result. The results for Turbine No. 2 varied little from turbine No. 1 and are presently in Table 2-2. The CO concentration averaged 9.0 ppm and the emission rate averaged 1.40 lb/hr. Total hydrocarbons as propane were not detected during the tests on Turbine No. 2.

2.2 Oxides of Nitrogen Emissions

Nitrogen Oxide (NOx) emissions were measured as Nitric Oxide (NO). Before entering the detector, all NOx was converted into NO. The NOx results are reported in uncorrected ppm, ppm corrected to 15% oxygen, and corrected to 15% oxygen at ISO conditions. The emission rates are presented in lbs/hr. Tables 2-3 and 2-4 summarized these results. The average concentration for Turbine No. 1 was

73.2 ppm uncorrected, 126.1 ppm corrected to 15% oxygen, and 120.3 corrected to 15% oxygen at ISO conditions. The average emission rate was 12.0 lbs/hr. Turbine No. 2 showed average concentrations of 73.5 ppm uncorrected, 119.3 ppm corrected to 15% oxygen, and 112.5 ppm corrected to 15% oxygen at ISO conditions. The average emission rate was 12.2 lbs/hr.

TABLE 2-1

SUMMARY OF MEASURED AIR POLLUTANTS
TURBINE NO. 1
ALGONQUIN GAS TRANSMISSION COMPANY
HANOVER, NEW JERSEY

Test Date Time	T-1 11/13/90 1130-1246	T-2 11/13/90 1400-1528	T-3 11/13/90 1540-1658	Average
Stack Conditions				
Flowrate (DSCFM)	37500	33600	33900	34800
Temperature (°F)	778	712	786	759
Moisture (%)	3.2	3.5	3.9	3.5
Oxygen (%)	17.0	18.1	17.2	17.4
Pollutant Emissions				
Concentration[a]				
Carbon Monoxide (ppm)	8.5	8.7	10.7	9.3
Total Hydrocarbons (ppm)[c]	< 0.1	2.5	< 0.1	< 0.9
Emission Rate[b]				
Carbon Monoxide (lbs/hr)	1.39	1.27	1.58	1.41
Total Hydrocarbons (lbs/hr)	<0.03	0.64	<0.02	<0.23

a) volume/volume
b) lbs/hr = ppm x DSCFM x molecular weight x (15.58×10^{-8})
c) ppm as propane

TABLE 2-2

SUMMARY OF MEASURED AIR POLLUTANTS
TURBINE NO. 2
ALGONQUIN GAS TRANSMISSION COMPANY
HANOVER, NEW JERSEY

Test Date Time	T-1 11/13/90 0720-0830	T-2 11/13/90 0955-1121	T-3 11/13/90 1222-1350	Average
Stack Conditions				
Flowrate (DSCFM)	37500	36500	36300	35400
Temperature (°F)	785	784	802	790
Moisture (%)	4.4	3.1	3.6	3.7
Oxygen (%)	17.6	17.1	17.1	17.3
Pollutant Emissions				
Concentration[a]				
Carbon Monoxide (ppm)	8.2	9.7	9.2	9.0
Total Hydrocarbons (ppm)[c]	< 0.1	< 0.1	< 0.1	< 0.1
Emission Rate[b]				
Carbon Monoxide (lbs/hr)	1.44	1.70	1.61	1.58
Total hydrocarbons (lbs/hr)	<0.023	0.025	<0.025	<0.025

a) volume/volume
b) lbs/hr = ppm x DSCFM x molecular weight x (15.58×10^{-8})
c) ppm as propane

TABLE 2-3

SUMMARY OF MEASURED NITROGEN OXIDE EMISSIONS
TURBINE NO. 1
ALGONQUIN GAS TRANSMISSION COMPANY
HANOVER, NEW JERSEY

Test	T-1	T-2	T-3	
Date	11/13/90	11/13/90	11/13/90	
Time	1130-1246	1400-1528	1540-1658	Average
Ambient Conditions				
Barometric Pressure (in Hg)	30.05	30.07	30.20	30.11
Temperature (°F)	38	42	47	42
Relative Humidity (%)	40	40	45	42
Saturation Vapor Pressure (in Hg)[a]	0.247	0.268	0.323	0.279
Stack Conditions				
Flowrate (DSCFM)	37500	33600	33900	34800
Temperature (°F)	778	712	785	759
Oxygen (%)	17.0	18.1	17.2	17.4
Process Conditions				
Fuel Flow (MMBTU/hr)	40	32	41	38
Combustor Inlet Pressure (PSIG)	122	93	122	112
Operating Load (HP)	3980	2522	3873	3458
Nitrogen Oxide Emissions				
Concentration				
Uncorrected (ppm)[b]	78.9	55.1	85.6	73.2
@15% Oxygen	125.8	116.1	136.5	126.1
@15% Oxygen & ISO Conditions	119.0	114.9	126.9	120.3
Emission Rate				
lbs/hr[c]	13.8	8.64	13.6	12.0

a) from table of vapor pressure in Appendix E, Chemical Engineers Handbook
b) volume/volume (dry)
c) lbs/hr = ppm x DSCFM x molecular weight x (15.58×10^{-8})

TABLE 2-4

SUMMARY OF MEASURED NITROGEN OXIDE EMISSIONS
TURBINE NO. 2
ALGONQUIN GAS TRANSMISSION COMPANY
HANOVER, NEW JERSEY

Test Date Time	T-1 11/13/90 1130-1246	T-2 11/13/90 1400-1528	T-3 11/13/90 1540-1658	Average
Ambient Conditions				
Barometric Pressure (in Hg)	30.14	30.14	30.14	30.14
Temperature (°F)	35	40	48	41
Relative Humidity (%)	45	45	45	45
Saturation Vapor Pressure (in Hg)[a]	0.204	0.247	0.337	0.263
Stack Conditions				
Flowrate (DSCFM)	33500	36500	36300	35400
Temperature (°F)	785	784	802	790
Oxygen (%)	17.6	17.1	17.1	17.3
Process Conditions[d]				
Fuel Flow (MMBTU/hr)	41	41	41	41
Combustor Inlet Pressure (PSIG)	124	123	122	123
Operating Load (HP)	4011	3940	3918	3956
Nitrogen Oxide Emissions				
Concentration				
Uncorrected (ppm)[b]	67.3	76.8	76.3	73.5
@15% Oxygen	120.3	119.2	118.5	119.3
@15% Oxygen & ISO Conditions	115.7	112.9	109.9	112.5
Emission Rate				
lbs/hr[c]	10.5	13.1	13.0	12.2

a) from table of vapor pressure in Appendix E, Chemical Engineers Handbook
b) volume/volume (dry)
c) lbs/hr = ppm x DSCFM x molecular weight x (15.58×10^{-8})
d) As provided by Algonquin

3.0 PROCESS DESCRIPTION

Algonquin Gas Transmission Company operates two 3830 hp Solar Centaur Model No. CD1-CB-C307 gas turbines at their compressor station in Hanover, New Jersey. These units provide auxiliary transfer capacity to Algonquin's gas transmission network. These units have no emission control devices installed on their exhaust systems.

During each one-hour test period, each unit was operated at or near 100% capacity. The following parameters were recorded by Algonquin personnel during each test period to document each turbine's operation:

*	Operating Load	(hp)
*	Fuel Flow Rate	(ft^3/HR)
*	Compressor Discharge Pressure	(PSIG)
*	Combustion Inlet Pressure	(PSIG)

Copies of this recorded data are included in Appendix D.

4.0 SAMPLING AND ANALYTICAL METHODS

Air pollution emission measurements were performed to determine NO_x, CO, and total hydrocarbons (THC) emission concentrations from the solar turbine exhaust. In addition, exhaust gas flowrates, moisture content, and the percent of CO_2 and O_2 in the exhaust gas were determined. Copies of data sheets used during the field effort are presented in Appendix A.

4.1 Continuous Emission Monitoring of CO, CO_2, and O_2

Continuous emission monitoring (CEM) was performed at each exhaust duct to determine concentrations and emission rates of CO_2, CO, and THC. A schematic of the CEM system is presented in Figure 4-1. Measurements were performed continuously for a minimum of three hours of operation on each unit.

All CEM data was recorded by a Kaye Digistrip III automatic digital data logger. The CEM system was housed in the TRC Mobile Environmental Laboratory.

Sample Conditioning System

A heated external Alundum thimble filter with a stainless steel nozzle facing away from the stack gas flow served to remove large particulate matter from the sample gas stream. The thimble filter was mounted on the end of stainless steel sampling probe. The sampling stream was drawn through one hundred (100) feet of heated (250°F $\pm$ 25°F) Teflon sample line and through a sample conditioner to remove the moisture from the gas stream. The sample was then drawn through Teflon tubing by a leak-free Teflon double diaphragm pump to a stainless steel sample manifold with an atmospheric by-pass rotameter. The CO and CO_2 analyzers drew samples from this manifold. The total hydrocarbon analyzer drew unconditioned sample through a heated (250°F) Teflon sample line connected prior to the conditioner.

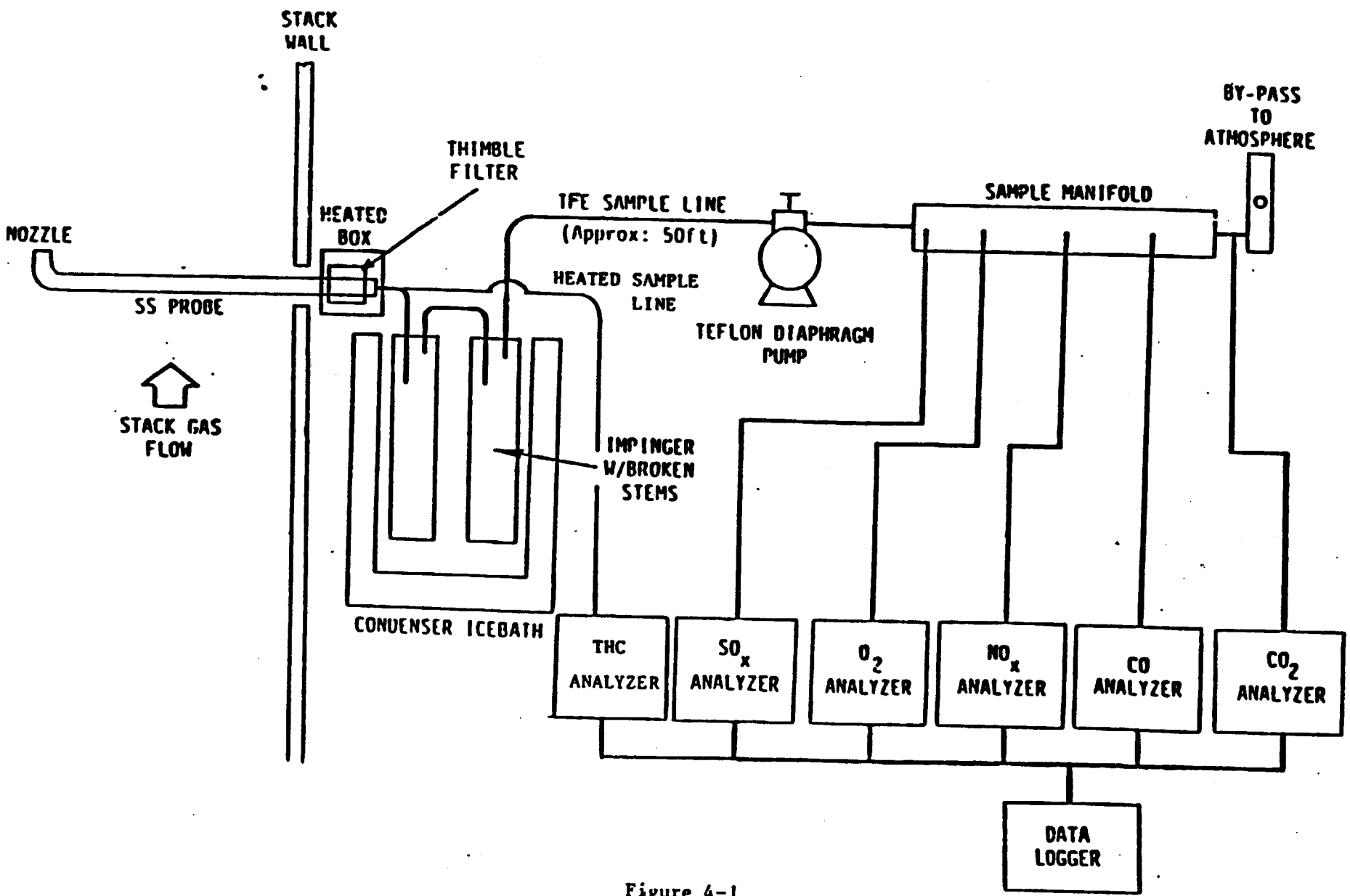

Figure 4-1

Continuous Emission Monitoring System Schematic

Continuous Monitors

Emission parameters which were monitored continuously at maximum load will be CO, CO_2, and THC. Carbon monoxide concentrations were monitored in accordance with EPA Method 10. CO_2 concentrations were measured in accordance with EPA Method 3A. THC concentrations were measured in accordance with NJ Method 3 guidelines.

A Westinghouse Model UNOR 6N non-dispersive infrared gas analyzer was used to measure CO concentrations. This analyzer operates on the measurement principle based on CO having a known characteristic absorption spectrum in the infrared range. It contains an infrared detector that uses the single non-dispersive beam technique with alternate modulations of the sample and reference cells. Radiation absorbed by CO in the sample cell produce a capacitance change in the detector which is proportional to the CO concentration.

An Infra-Red Industries, Inc. infrared CO_2 analyzer was used to monitor CO_2 emissions. This instrument operates on the principle of CO_2 having a known characteristic absorption spectra in the infrared range. Radiation absorbed by CO_2 in the sample cell produces a capacitance change in the detector which is proportional to the CO_2 concentration.

A Ratfisch Model RS55 Total Hydrocarbon Analyzer, which utilizes a flame ionization process was used to determine THC concentrations in accordance with NJ Method 3. A small amount of sample containing hydrocarbons is introduced to the system through a heated filter, sample line, and pump. The sample gas enters the heated detector bench, which contains the flame ionization detector

(FID). The resulting current is detected and amplified, and the output of the amplifier provides a signal for direct readout on a meter or for output to a recorder or computer.

Data Acquisition and Handling

All CEM data was monitored by a Kaye Instruments Digistrip III automatic data logger which recorded data on it's integral printer. Emission data will be "viewed" by the data logger every six seconds and averaged at 1- to 2-minute intervals. This enabled real-time emission data to be available on site.

CEM System Calibration

Calibrations of the CEM system were performed at the beginning and end of each test period. Calibration gases (Protocol I or NBS traceable) were introduced to the system through a 3-way valve at the back of the sample probe. Span gases for O_2, CO, NO_x, CO_2, and propane were used. Each analyzer was multi-point calibrated prior to the test program to document each instruments linearity.

4.2 Nitrogen Oxides

Triplicate measurements of NO_x and O_2, were performed on the Solar turbines during one-hour tests according to EPA Method 20. TRC used a Thermo-Electron Model 10A chemiluminescent NO/NO_x analyzer and Horiba Model PMA-200 paramagnetic oxygen analyzer to perform the measurements. The measurement system used is that described in Section 4.1. Prior to each day's sampling, TRC conducted the following measurement system performance tests or equivalent as outlined in EPA Method 20.

* NO_x and O_2 Calibration Gas Check
* Calibration Check[a]
* Interference Response Check
* Residence and Response Time Check
* NO_2 to NO Conversion Efficiency Check

This data is presented in Appendix C

A Horiba Model PMA-200 oxygen analyzer was used to determine concentrations of O_2 in the stack gas. This instrument utilizes the magnetic dumbbell sphere (paramagnetic) principle, which comparatively measures the magnetic susceptibility of a gas volume by the force acting upon a non-magnetic test body suspended in a disproportionate magnetic field. Output current is proportional to the oxygen concentration.

The Thermo-Electron NO/NO_x gas analyzer utilizes the chemiluminescent reaction of NO and O_3 (ozone) as provided by the analytical method ($NO + O_3 \rightarrow NO_2 + O_2$).

a. According to EPA Method 20, the following span gas calibration ranges needed to be used to calibrate the NOx instrument; 100%-80%, 45-55%, 20%-30%. TRC's 100%-80% of span calibration gas did not yield an acceptable value. Since the increased NOx values never exceeded the mid-level calibration gas value, Michael Papp from NJDEP approved the elimination of the high level calibration gas.

Before initiating the NO_x measurements, EPA Method 20 states that a preliminary oxygen measurement profile should be conducted with the gas turbine operated at maximum load, using 16 traverse points. The minimum sampling time at each point should be one minute plus the average system response time as outlined by EPA Method 20. The emission test consisted, however, of a 16 point traverse along the duct cross-section. Throughout the duct the oxygen concentration remained stable. Immediately following each test run, the instrument zero and calibration drift was determined using zero and mid-level calibration gases. All NO_x emissions were corrected to 15% O_2 and ISO standard conditions using the following formulae.

1. $$NO_{x_{15\%\ O_2}} = \left[NO_{x_{meas}}\ (dry)\right]\left[\frac{(20.9 - 15)}{(20.9 - O_2)}\right]$$

where:

$NO_{x_{meas}}$ = NO_x concentration measured ppm (dry)

O_2 = O_2 measured (dry)

2. $$NO_{x_{ISO}} = \left[NO_{x_{15\%\ O_2}}\right]\left[ISO\ X\ Factor\right]$$

where:

$$ISO\ X\ Factor = \left(\frac{P_{ref}}{P_{obs}}\right)^{0.5}\left(e^{19\left(H_{amb}-0.00633\right)}\right)\left(\frac{288\,^{\circ}K}{T_{amb}}\right)^{1.53}$$

$NO_{x_{ISO}}$ = ppm NO_x at 15% O_2 and ISO std. cond.

$NO_{x_{15\%\ O_2}}$ = ppm NO_x at 15% O_2

P_{ref} = reference combustor inlet absolute pressure at 29.92 in. Hg ambient pressure, in. Hg

P_{obs} = measured combustor inlet absolute pressure at test ambient pressure, in. Hg

e = transcendental constant (2.718)

H_{amb} = ambient specific humidity

T_{amb} = ambient temperature, $^{\circ}K$

$$H_{amb} = \frac{\%\ RH}{100}\left[\frac{P_v}{1.61\ (P_{obs} - P_v)}\right]$$

P_v = saturation vapor pressure at T_{AMB}, in. Hg

The calibration span value was 250 ppm for these tests. Examples of these calculations are presented in Appendix E.

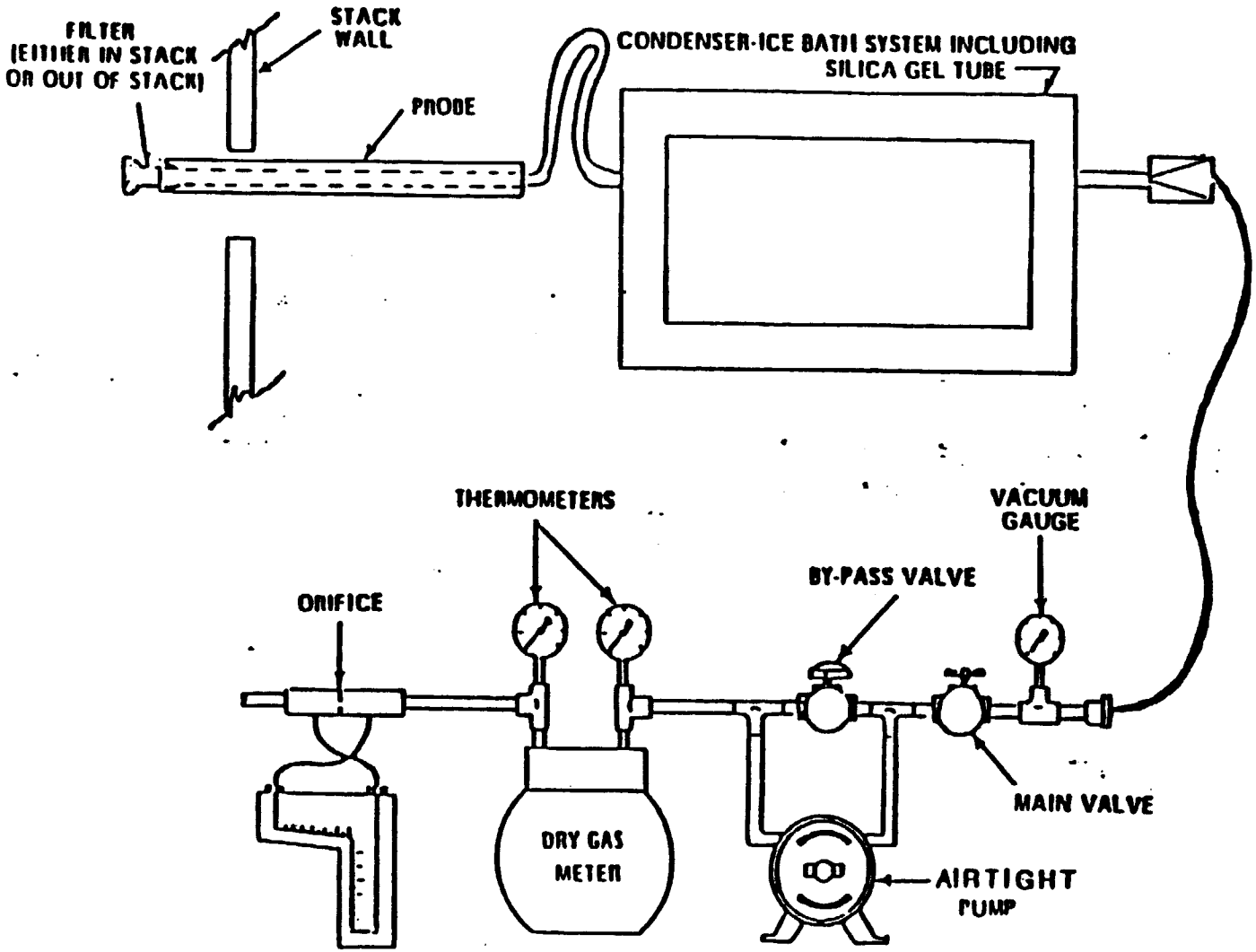

Figure 4-2 Moisture sampling train

4.3 EPA Method 4

Sample Collection

Moisture sampling was performed at each outlet using a modified EPA collection train, Method 4, similar to that described in the July 1, 1987, edition of the Federal Register. It is shown schematically in Figure 402 and consists of a heated probe, filter, a flexible Teflon umbilical line, four impingers, vacuum pump, dry gas meter, and an orifice flow meter.

The TRC modification of the standard EPA Method 4 train consisted of placing the flexible Teflon tubing between the probe and the impinger. This modification makes the sampling equipment much less awkward to handle and allows vertical orientation of the sampling probe without risk of impinger damage or loss of impinger solutions. Complete sampling train calibrations were performed before and after the compliance test program and are contained in Appendix B.

An ice bath containing four impingers was attached to the back end of the probe via a flexible Teflon umbilical tube. The first two impingers contained water, the third was dry, and the fourth contains silica gel to remove any remaining moisture. Flexible tubing, a vacuum gauge, needle valve, leak-less vacuum pump, bypass valve, dry gas meter, calibrated orifice, and a dual range inclined manometer completed the sampling train.

Sampling flow valve was adjusted with the bypass valve to maintain 0.75 cfm. Before and after each test run the sampling train was leak checked (accepted at less than 0.02 cfm). Four ports were traversed at four points during each 64-minute test period.

Sample Analysis

After the sample was collected, the sample train was leak-checked as described in EPA Method 4. The volume of moisture condensed in the first three impingers was measured to the nearest milliliter. The silica gel weight increase of the fourth impinger was also be determined to the nearest 0.5 milligram. This information along with the total volume of gas samples was used to calculated the moisture content of the exhaust gas.

4.4 Flowrate Measurements

A velocity traverse was performed at the turbine exhaust location in accordance with EPA Methods 1 and 2. The gas velocity was measured using an S-type pitot tube and inclined water manometer. The flue gas temperature was monitored by a thermocouple attached to the pitot and connected to a potentiometer. Measurements were performed before, during, and after each test. Traverse point locations are presented in Figure 4-3.

TRC Environmental Consultants, Inc

Figure 4-3

EPA Method 1 Sample and Velocity Traverses for Stationary Sources

Firm: Algonquin
Location: Turbines 1 and 2
Diameters Upstream: 0.6
Diameters Downstream: 2.4

Total Traverse Points Required: 16
Number of Ports: 4
Points Per Port: 4
Traverse (Horizontal or Vertical): Horizontal

MINIMUM NUMBER OF TRAVERSE POINTS FOR PARTICULATE AND NONPARTICULATE TRAVERSES

Duct Diameters Upstream from Flow Disturbance (Distance A)

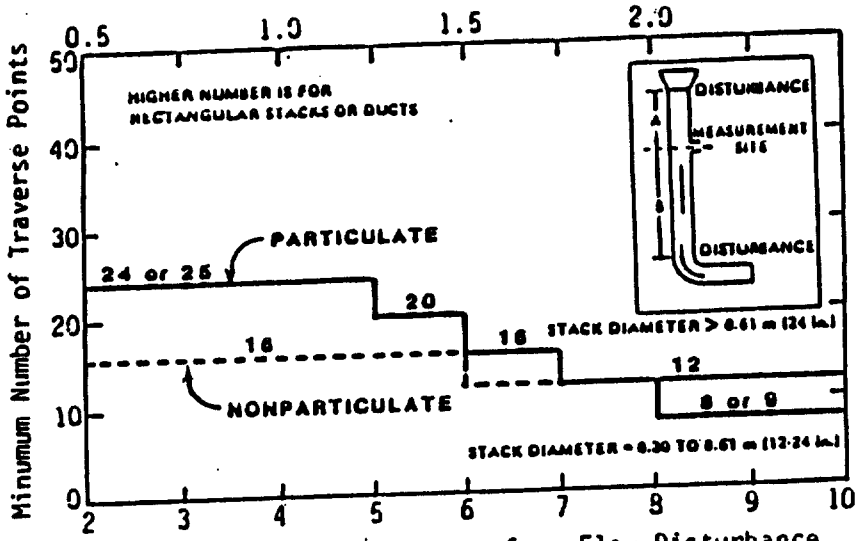

Duct Diameters Downstream from Flow Disturbance (Distance B)

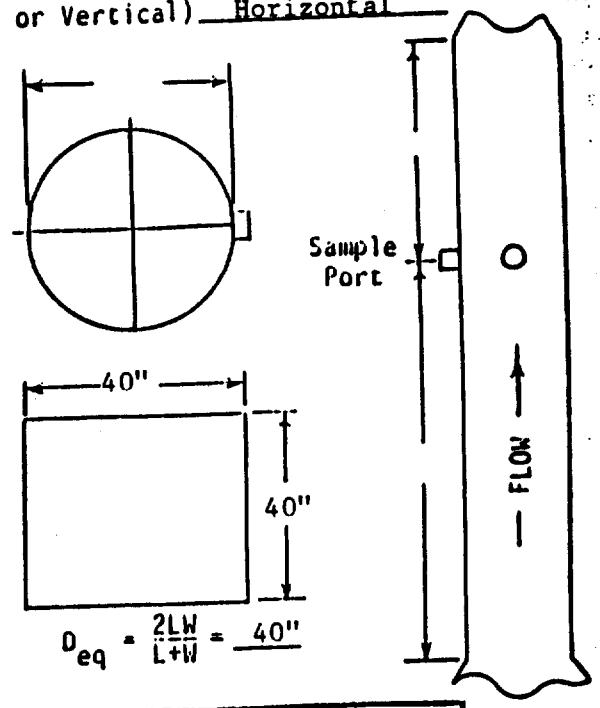

$D_{eq} = \frac{2LW}{L+W} = 40"$

CROSS-SECTIONAL LAYOUT FOR RECTANGULAR STACKS

Total Traverse Points	Matrix
9	3x3
12	4x3
16	4x4
20	5x4
25	5x5

LOCATION OF TRAVERSE POINTS IN CIRCULAR STACKS

Point Number On A Diameter	(Percent of stack diameter from inside wall to traverse point) Number Of Traverse Points On A Diameter				
	4	6	8	10	12
1	6.7	4.4	3.2	2.6	2.1
2	25.0	14.6	10.5	8.2	6.7
3	75.0	29.6	19.4	14.6	11.8
4	93.3	70.4	32.3	22.6	17.7
5		85.4	67.7	34.2	25.0
6		95.6	80.6	65.8	35.6
7			89.5	77.4	64.4
8			96.8	85.4	75.0
9				91.8	82.3
10				97.4	88.2
11					93.3
12					97.9

TRAVERSE POINT LOCATIONS

No.	Distance From Wall	Nipple Size	Total Distance
1	5"		
2	15"		
3	25"		
4	35"		
5			
6			
7			
8			
9			
10			
11			
12			

5.0 QUALITY ASSURANCE

TRC's quality assurance program is designed to ensure that emission measurement work is performed by qualified people using proper equipment following written procedures in order to provide accurate, defensible data. This program is based upon the EPA Quality Assurance Handbook for Air Pollution Measurement Systems, Volume II I(EPA-600/4-7-027 lb).

5.1 Methods 1, 2, and 4

TRC's measurement devices, including pitot tubes, dry gas meters, thermocouples, probes, and nozzles are uniquely identified and calibrated with documented procedures and acceptance criteria before and after each field effort. Records of all calibration data are maintained in TRC files.

Probe and sample line temperatures were maintained within 25°F of the temperatures specified. All glassware is cleaned by the following procedures prior to use for sampling when condensables are collected.

1. Acetone Rinse
2. Hot Detergent
3. Hot Water Rinse
4. Chromic Acid Soak
5. Hot Water Rinse
6. Distilled Deionized Water Rinse

5.2 CEM System

The CEM System was calibrated and leak-checked at the beginning and end of each test day. All calibration gases were NBS certified or equivalent and representative of stack gas concentration. Multipoint calibrations were performed on the analyzers prior to the field program to establish linearity.

5.3 EPA Method 20 Performance Checks

Before each test day, the following performance checks were performed:

- Calibration Gas Check

  Certification sheets for this check can be found in Appendix C.

- Calibration Check

  Instrument calibration checks are found in Appendix C

- Interference Response Check

  Data sheets showing no interference gas response can be found in Appendix C.

- Residence and Response Time

  The data sheet showing the response time is found in Appendix C

- NO2 to NO Conversion Efficiency

  A conversion efficiency test was performed in the laboratory prior to the field effort. The conversion efficiency was found to be 100%.

APPENDIX A

Field Data

METHOD 20
FIELD DATA SHEET

Firm Algonquin
Location HANOVER NJ
Tester [illegible] SBN AJB
Unit #1 SN CC84068
Date 11/13/90
Time 1130 - 1246

P_{obs} _____ in. Hg
T_{AMB} 40 °F
T_{AMB} 4.4 °K
Wet Bulb _____ °F
Relative Humidity 40 %
P_V 6.274 mm Hg = ~~159.26~~ in Hg

	Turbine Load MW/%	NO_x (dry) PPM	O_2 (dry) %	CO_2	NO_x (15%) PPM	NO_x (ISO) PPM	ISO K Factor
1130		76.0	17.0	2.5			
1140		78.0	17.0	2.5			
1150		77.7	17.0	2.5			
1200		80.2	17.0	2.5			
1212		74.0	17.3	2.3			
1220		72.5	17.3	2.4			
1230							
AVERAGE		78.9	17.0		125.8	119.0	0.946

1. $$NO_{x_{15\%\ O_2}} = \left[NO_{x_{meas}\ (dry)}\right]\left[\frac{(20.9 - 15)}{(20.9 - \%O_2)}\right]$$

Where:

$NO_{x_{meas}}$ = NO_x concentration measured ppm (dry)

$\%O_2$ = $\%O_2$ measured (dry)

2. $$NO_{x_{ISO}} = \left[NO_{x_{15\%\ O_2}}\right]\left[\text{ISO K Factor}\right]$$

Where:

$$\text{ISO K Factor} = \left(\frac{P_{ref}}{P_{obs}}\right)^{0.5}\left(e^{19\left(H_{amb}-0.00633\right)}\right)\left(\frac{288^{\circ}K}{T_{amb}}\right)^{1.53}$$

$NO_{x_{ISO}}$ = ppm NO_x at 15% O_2 and ISO std. cond.

$NO_{x_{15\%\ O_2}}$ = ppm NO_x at 15% O_2

P_{ref} = reference combuster inlet absolute pressure at 29.92 in. Hg ambient pressure, in. Hg

P_{obs} = measured combuster inlet absolute pressure at test ambient pressure, in. Hg

e = transcendental constant (2.718)

H_{amb} = ambient specific humidity

T_{amb} = ambient temperature, °K

$$H_{amb} = \frac{\%\ RH}{100}\left[\frac{P_v}{1.61\ (P_{obs}-P_v)}\right]$$

P_v = saturation vapor pressure at T_{AMB}, in. Hg

Rev. 3 4/29/83

TRO _ VIR[illegible] NTAL[illegible] SUL[illegible] S, 1

CONTINUOUS EMISSION MONITORING

FIELD DATA SHEET

Firm: Algonquin
Location: Hanover NJ
Tester: [illegible] SBD AJB

Test Number: T-1-1
Sample Loc.: Unit #1
Date: 11/12/90
Time: 1130 1240

Ambient Temp.: 38
MEL Temp.: 80
Bar. Pressure: 30.05
Vacuum Gauge: 11 in H2O
Pressure Gauge: ~750

Analyzer		(Rack) analyzer cal. response	INITIAL VALUES system cal. response	INITIAL VALUES system cal. bias (% of span)	FINAL VALUES system cal. response	FINAL VALUES system cal. bias (% of span)	drift (% of span)	range & units	avg. gas ($\bar{C}$) conc.	effluent gas (C_g) conc.
CO	zero	0.2	-0.4	1.1	-1.2	1.4	0.3			
	upscale	41.5	36.9	4.6	36.9	4.6	0.0	100 ppm		
O_2	zero	0.0	0.0	0.0	0.1	~~[illegible]~~ 0.4	0.4			
	upscale	22.4			22.1	1.2	1.2	25%		
CO_2	zero	0.1	0.1	0.0	0.1	0.0	0.0			
	upscale	12.7	12.6	~~[illegible]~~ 0.5	12.6	0.5	0.0	20%		
NO_x	zero	0.2	0.5	0.1	-0.2	0.2	0.1			
	upscale	146.0	137.2	~~[illegible]~~ 3.5	133.0	~~[illegible]~~ 1.9	1.7	250 ppm		
SO_2	zero									
	upscale									
THC	zero	0.1	-0.2	0.3	-0.3	0.4	0.1			
	upscale	9.6			8.0	1.6	1.6	0-100 ppm		
				± 5 %		± 5 %	± 3 %			

LEAK CHECK

Analyzer		cal. back of analyzer response	cal. upstream of analyzer response	bias check (% of span)
CO	zero	0.2		
	upscale			
NO_x	zero	0.0	0.2	
	upscale	142.5	146.0	
				± 5 %

Calibration Gases

	Low cal	Mid Cal	High Cal	Tank ID# Mid	Tank ID# High	Low
NO_x ~~CO~~	71.2	14.3	223.1	ALM008205	ALL5019	1L2066
O_2	—	11.0	22.06	AAL20877	ALM5152	
CO_2	—	5.0	12.0	ALM009709	AAL3934	
CO ~~NO_x~~	—	10.1	41.6	2L1196	2L1125	
SO_2	—					
THC_{as}	5.2	9.67	104	3L1716	AAL8734	3L1274

$$\text{system cal.} = \frac{\text{system cal resp.} - \text{analyzer cal resp.}}{\text{span (range)}} \times 100$$

$$\text{drift} = \frac{\text{final system cal resp.} - \text{initial system cal resp.}}{\text{span (range)}} \times 100$$

$$C_g = (\bar{C} - \bar{C}_o)\frac{C_{ma}}{C_m - C_o}$$

C_g = effluent gas

C = average gas conc.

C_{ma} = actual cal gas upscale

C_o = avg. of zero gas for bias system cal

C_m = avg. of upscale for bias system cal

METHOD 20
FIELD DATA SHEET

Firm Algonquin
Location Hanover NJ
Tester T-1-2
Unit #1
Date 11/13/90
Time 1400 — 1528

P_{obs} _____ in. Hg
T_{AMB} 42 °F
T_{AMB} _____ °K
Wet Bulb ~~32~~ °F
Relative Humidity 40 %
P_v 6.822 ~~in. Hg~~ mm Hg

	Turbine Load MW/%	NO_x (dry) PPM	O_2 (dry) %		NO_x (15%) PPM	NO_x (ISO) PPM	ISO K Factor
1400		74.0	17.5	2.2	~~2.2~~		
1410							
AVERAGE		55.1	18.1		116.1	114.9	0.990

1. $$NO_{x_{15\% O_2}} = \left[NO_{x_{meas}} \text{ (dry)}\right]\left[\frac{(20.9 - 15)}{(20.9 - \%O_2)}\right]$$

Where:

$NO_{x_{meas}}$ = NO_x concentration measured ppm (dry)

$\%O_2$ = $\%O_2$ measured (dry)

2. $$NO_{x_{ISO}} = \left[NO_{x_{15\% O_2}}\right]\left[\text{ISO K Factor}\right]$$

Where:

$$\text{ISO K Factor} = \left(\frac{P_{ref}}{P_{obs}}\right)^{0.5}\left(e^{19\left(H_{amb}-0.00633\right)}\right)\left(\frac{288\,^{o}K}{T_{amb}}\right)^{1.53}$$

$NO_{x_{ISO}}$ = ppm NO_x at 15% O_2 and ISO std. cond.

$NO_{x_{15\% O_2}}$ = ppm NO_x at 15% O_2

P_{ref} = reference combuster inlet absolute pressure at 29.92 in. Hg ambient pressure, in. Hg

P_{obs} = measured combuster inlet absolute pressure at test ambient pressure, in. Hg

e = transcendental constant (2.718)

H_{amb} = ambient specific humidity

T_{amb} = ambient temperature, °K

$$H_{amb} = \frac{\%\,RH}{100}\left[\frac{P_v}{1.61\,(P_{obs}-P_v)}\right]$$

P_v = saturation vapor pressure at T_{AMB}, in. Hg

Rev. 3 4/29/83

TRC IRON AL ULTI , IN

CONTINUOUS EMISSION MONITORING
FIELD DATA SHEET

Firm: Algonquin
Location: Hanover NJ
Tester: SBN AJB

Test Number: T-1-2
Sample Loc.: Unit #1
Date: 11/13/90
Time: 1400 - 1528

Ambient Temp.: 42
MEL Temp.: 86
Bar. Pressure: 30.07
Vacuum Gauge: 11
Pressure Gauge: 700

Analyzer		(Rack) analyzer cal. response	INITIAL VALUES system cal. response	INITIAL VALUES system cal. bias (% of span)	FINAL VALUES system cal. response	FINAL VALUES system cal. bias (% of span)	drift (% of span)	range & units	avg. gas ($\bar{C}$) conc.	effluent gas (C_g) conc.
CO	zero	-1.2	-1.2	0.0	-1.3	0.1	0.1			
	upscale	41.3	36.9	4.4	36.3	5.0	0.6	100 ppm		
O_2	zero	0.0	0.1	0.4	0.0	0.[illegible]	0.4			
	upscale	22.5	22.1	1.6	22.0	2.0	0.4	25%		
CO_2	zero	0.1	0.1	0.0	0.1	0.0	0.0			
	upscale	12.5	12.6	0.5	12.5	0.0	0.5	20%		
NO_x	zero	-0.7	-0.2	0.2	0.0	0.3	0.[illegible]			
	upscale	145.7	133.0	5.0	135.0	4.3	0.1	250 ppm		
SO_2	zero									
	upscale									
THC	zero	0.2	-0.3		~~-0.[illegible]~~ 0.2					
	upscale	9.1	8.0		8.5					
				± 5 %		± 5 %	± 3 %			

LEAK CHECK

Analyzer		cal. back of analyzer response	cal. upstream of analyzer response	bias check (% of span)
CO	zero			
	upscale			
NO_x	zero			
	upscale			± 5 %

Calibration Gases

	Mid Cal	High Cal	Tank ID# Mid / High
CO			/
O_2			/
CO_2			/
NO_x			/
SO_2			/
THC_{as}			/

$$\text{system cal.} = \frac{\text{system cal resp.} - \text{analyzer cal resp.}}{\text{span (range)}} \times 100$$

$$\text{drift} = \frac{\text{final system cal resp.} - \text{initial system cal resp.}}{\text{span (range)}} \times 100$$

$$C_g = (\bar{C} - \bar{C}_o)\frac{C_{ma}}{C_m - C_o}$$

C_g = effluent gas

$\bar{C}$ = average gas conc.

C_{ma} = actual cal gas upscale

C_o = avg. of zero gas for bias system cal

C_m = avg. of upscale for bias system cal

METHOD 20
FIELD DATA SHEET

Test 3

Firm: Algonquin
Location: Hanover NJ
Tester: SBN AJB
Unit: #1
Date: 11/14/90
Time: 1540 - 1658

P_{obs} _____ in. Hg
T_{AMB}: 47 °F
T_{AMB} _____ °K
Wet Bulb: 39 °F
Relative Humidity: 45 %
P_v: 8.211 in. Hg

Turbine Load MW/%	NO_x (dry) PPM	O_2 (dry) %	NO_x (15%) PPM	NO_x (ISO) PPM	ISO K Factor
AVERAGE	85.6	17.2	136.5	126.9	0.930

1. $$NO_{x_{15\% O_2}} = \left[NO_{x_{meas}} \text{ (dry)}\right]\left[\frac{(20.9 - 15)}{(20.9 - \%O_2)}\right]$$

Where:

$NO_{x_{meas}}$ = NO_x concentration measured ppm (dry)

$\%O_2$ = $\%O_2$ measured (dry)

2. $$NO_{x_{ISO}} = \left[NO_{x_{15\% O_2}}\right]\left[\text{ISO K Factor}\right]$$

Where:

$$\text{ISO K Factor} = \left(\frac{P_{ref}}{P_{obs}}\right)^{0.5}\left(e^{19(H_{amb} - 0.00633)}\right)\left(\frac{288\,^{o}K}{T_{amb}}\right)^{1.53}$$

$NO_{x_{ISO}}$ = ppm NO_x at 15% O_2 and ISO std. cond.

$NO_{x_{15\% O_2}}$ = ppm NO_x at 15% O_2

P_{ref} = reference combuster inlet absolute pressure at 29.92 in. Hg ambient pressure, in. Hg

P_{obs} = measured combuster inlet absolute pressure at test ambient pressure, in. Hg

e = transcendental constant (2.718)

H_{amb} = ambient specific humidity

T_{amb} = ambient temperature, °K

$$H_{amb} = \frac{\%\,RH}{100}\left[\frac{P_v}{1.61\,(P_{obs} - P_v)}\right]$$

P_v = saturation vapor pressure at T_{AMB}, in. Hg

Rev. 3 4/29/83

TR[illegible] [illegible]IRC[illegible] TAL[illegible] SUL[illegible] [illegible], I

CONTINUOUS EMISSION MONITORING

FIELD DATA SHEET

Firm	Algonquin	Test Number	T-1-3	Ambient Temp.	47
Location	Hanover, NJ	Sample Loc.	UNIT #1	MEL Temp.	80
Tester	[illegible] AJB	Date	11/14/90	Bar. Pressure	30.20
		Time	1540 – 1658	Vacuum Gauge	11
				Pressure Gauge	200

Analyzer		(Rack) analyzer cal. response	INITIAL VALUES system cal. response	INITIAL VALUES system cal. bias (% of span)	FINAL VALUES system cal. response	FINAL VALUES system cal. bias (% of span)	FINAL VALUES drift (% of span)	range & units	avg. gas ($\bar{C}$) conc.	effluent gas (C_g) conc.
CO	zero	0.2	0.1	0.1	-0.3					
	upscale	8.3	7.6	0.7	7.1			[illegible]		
O_2	zero	0.0	0.1	0.4	0.0					
	upscale	22.3	22.1	0.3	22.0			[illegible]		
CO_2	zero	0.1	0.2	0.5	0.2					
	upscale		12.0		12.0			[illegible]		
NO_x	zero	0.2	0.7	0.2	0.7					
	upscale	143.8	142.8	0.4	150.2		3.0	[illegible]		
SO_2	zero									
	upscale									
THC	zero	0.0	0.9		-0.2					
	upscale	9.7	9.4		9.1			[illegible]		
				± 5 %		± 5 %	± 3 %			

LEAK CHECK

Analyzer		cal. back of analyzer response	cal. upstream of analyzer response	bias check (% of span)
CO	zero			
	upscale			
NO_x	zero			
	upscale			
				± 5 %

Calibration Gases

	Mid Cal	High Cal	Tank ID# Mid	Tank ID# High
CO				
O_2				
CO_2				
NO_x				
SO_2				
THC_{as}				

$$\text{system cal.} = \frac{\text{system cal resp.} - \text{analyzer cal resp.}}{\text{span (range)}} \times 100$$

$$\text{drift} = \frac{\text{final system cal resp.} - \text{initial system cal resp.}}{\text{span (range)}} \times 100$$

$$C_g = (\bar{C} - \bar{C}_o)\frac{C_{ma}}{C_m - C_o}$$

C_g = effluent gas

C = average gas conc.

C_{ma} = actual cal gas upscale

C_o = avg. of zero gas for bias system cal

C_m = avg. of upscale for bias system cal

METHOD 20
FIELD DATA SHEET

T-1

Firm Algonquin Gas Co.
Location Hanover NJ
Tester SBN AB
Unit #2
Date 11/14/90
Time 07:20 - 08:30

P_{obs} _____ in. Hg
T_{AMB} 35 °F
T_{AMB} _____ °K
Wet Bulb _____ °F
Relative Humidity 45 %
P_v 5.181 mm ~~in.~~ Hg

Turbine Load MW/%	NO_x (dry) PPM	O_2 (dry) %	NO_x (15%) PPM	NO_x (ISO) PPM	ISO K Factor
	67.3	17.6	120.3	115.7	0.962

1. $$NO_{x_{15\% O_2}} = \left[NO_{x_{meas}} \text{ (dry)}\right]\left[\frac{(20.9 - 15)}{(20.9 - \%O_2)}\right]$$

Where:

$NO_{x_{meas}}$ = NO_x concentration measured ppm (dry)

$\%O_2$ = $\%O_2$ measured (dry)

2. $$NO_{x_{ISO}} = \left[NO_{x_{15\% O_2}}\right]\left[\text{ISO K Factor}\right]$$

Where:

$$\text{ISO K Factor} = \left(\frac{P_{ref}}{P_{obs}}\right)^{0.5}\left(e^{19(H_{amb}-0.00633)}\right)\left(\frac{288\,^{\circ}K}{T_{amb}}\right)^{1.53}$$

$NO_{x_{ISO}}$ = ppm NO_x at 15% O_2 and ISO std. cond.

$NO_{x_{15\% O_2}}$ = ppm NO_x at 15% O_2

P_{ref} = reference combuster inlet absolute pressure at 29.92 in. Hg ambient pressure, in. Hg

P_{obs} = measured combuster inlet absolute pressure at test ambient pressure, in. Hg

e = transcendental constant (2.718)

H_{amb} = ambient specific humidity

T_{amb} = ambient temperature, °K

$$H_{amb} = \frac{\%\ RH}{100}\left[\frac{P_v}{1.61\,(P_{obs} - P_v)}\right]$$

P_v = saturation vapor pressure at T_{AMB}, in. Hg

Rev. 3 4/29/83

TRC IRON AL ULT , IN

CONTINUOUS EMISSION MONITORING

FIELD DATA SHEET

Firm	Algonquin	Test Number	T-2-1	Ambient Temp.	35
Location	Hanover NJ	Sample Loc.	UNIT #2	MEL Temp.	80
Tester	JOD SBN ATB	Date	11/14/90	Bar. Pressure	30.14
		Time	0720-0830	Vacuum Gauge	11
				Pressure Gauge	700 cfm

Analyzer		INITIAL VALUES (Rack) analyzer cal. response	INITIAL VALUES system cal. response	INITIAL VALUES system cal. bias (% of span)	FINAL VALUES system cal. response	FINAL VALUES system cal. bias (% of span)	FINAL VALUES drift (% of span)	range & units	avg. gas ($\bar{C}$) conc.	effluent gas (C_g) conc.
CO	zero	-0.2	0.0	0.2	-0.1	0.5	0.5			
	upscale	41.5/9.2	38.5/8.0	3.0/1.2	1.2	2.0	0.8	100 ppm		
O_2	zero	0.1	0.2	0.4	0.2	0.4	0.0			
	upscale	22.7	22.1	2.4	22.3	1.6	0.8	25 %		
CO_2	zero	0.1	0.1	0.0	0.1	0.0	0.0			
	upscale	12.1	11.9	1.0	12.0	0.5	0.5	20 %		
NO_x	zero	0.0	0.2	0.1	0.0	0.0	0.1			
	upscale	142.7	134.5	3.3	134.2	3.4	0.1	250 ppm		
SO_2	zero									
	upscale									
THC	zero	0.2	-0.2	0.4	0.0	0.2	0.2			
	upscale	9.7	8.9	0.8	10.3	0.6	1.4	100 ppm		
				± 5 %		± 5 %	± 3 %			

LEAK CHECK

Analyzer		cal. back of analyzer response	cal. upstream of analyzer response	bias check (% of span)
CO	zero			
	upscale			
NO_x	zero			
	upscale			
				± 5 %

$$\text{system cal.} = \frac{\text{system cal resp.} - \text{analyzer cal resp.}}{\text{span (range)}} \times 100$$

$$\text{drift} = \frac{\text{final system cal resp.} - \text{initial system cal resp.}}{\text{span (range)}} \times 100$$

$$C_g = (\bar{C} - \bar{C}_o)\frac{C_{ma}}{C_m - C_o}$$

C_g = effluent gas

C = average gas conc.

C_{ma} = actual cal gas upscale

C_o = avg. of zero gas for bias system cal

C_m = avg. of upscale for bias system cal

Calibration Gases

	Mid Cal	High Cal	Tank ID# Mid	Tank ID# High
CO				
O_2				
CO_2				
NO_x				
SO_2				
THC_{as}				

METHOD 20
FIELD DATA SHEET

T-2

Firm Algonquin gas Co
Location Hanover NJ
Tester SBN AJB
Unit # 2
Date 11/14/90
Time 0955 - 1121

P_{obs} _____ in. Hg
T_{AMB} 40 °F
T_{AMB} 277.4 °K
Wet Bulb _____ °F
Relative Humidity 45 %
P_v 0.274 in. Hg

Turbine Load MW/%	NO_x (dry) PPM	O_2 (dry) %	NO_x (15%) PPM	NO_x (ISO) PPM	ISO K Factor
	76.8	17.1	119.2	112.9	0.947

1. $$NO_{x_{15\% O_2}} = \left[NO_{x_{meas}} \text{ (dry)}\right]\left[\frac{(20.9 - 15)}{(20.9 - \%O_2)}\right]$$

Where:

$NO_{x_{meas}}$ = NO_x concentration measured ppm (dry)

$\%O_2$ = $\%O_2$ measured (dry)

2. $$NO_{x_{ISO}} = \left[NO_{x_{15\% O_2}}\right]\left[\text{ISO K Factor}\right]$$

Where:

$$\text{ISO K Factor} = \left(\frac{P_{ref}}{P_{obs}}\right)^{0.5}\left(e^{19\left(H_{amb}-0.00633\right)}\right)\left(\frac{288^{\circ}K}{T_{amb}}\right)^{1.53}$$

$NO_{x_{ISO}}$ = ppm NO_x at 15% O_2 and ISO std. cond.

$NO_{x_{15\% O_2}}$ = ppm NO_x at 15% O_2

P_{ref} = reference combuster inlet absolute pressure at 29.92 in. Hg ambient pressure, in. Hg

P_{obs} = measured combuster inlet absolute pressure at test ambient pressure, in. Hg

e = transcendental constant (2.718)

H_{amb} = ambient specific humidity

T_{amb} = ambient temperature, °K

$$H_{amb} = \frac{\%\ RH}{100}\left[\frac{Pv}{1.61\ (P_{obs}-P_v)}\right]$$

P_v = saturation vapor pressure at T_{AMB}, in. Hg

Rev. 3 4/29/83

TRC IRO[TAL [ULT , I[

CONTINUOUS EMISSION MONITORING

FIELD DATA SHEET

Firm: Algonquin
Location: Hanover NJ
Tester: [illegible] SBN ATB

Test Number: T-2-2
Sample Loc.: UNIT #2
Date: 11/14/90
Time: 0955-1031

Ambient Temp.: 40
MEL Temp.: 82
Bar. Pressure: 30.[illegible]
Vacuum Gauge: 11
Pressure Gauge: 700

Analyzer		INITIAL VALUES (Rack) analyzer cal. response	INITIAL VALUES system cal. response	INITIAL VALUES system cal. bias (% of span)	FINAL VALUES system cal. response	FINAL VALUES system cal. bias (% of span)	FINAL VALUES drift (% of span)	range & units	avg. gas ($\bar{C}$) conc.	effluent gas (Cg) conc.
CO	zero	-0.2	-0.7	0.5	-0.5	0.3	0.2			
	upscale	41.5 / 9.2	/ 7.2	2.0	/ 7.2	2.0	0.0	100 ppm		
O_2	zero	0.1	0.2	0.4	0.0	0.4	0.8			
	upscale	22.7	22.3	1.6	22.1	2.4	0.8	25%		
CO_2	zero	0.1	0.1	0.0	0.1	0.0	0.0			
	upscale	12.1	12.0	0.4	12.0	0.4	0.0	20%		
NO_x	zero	0.0	0.0	0.0	0.2	0.1	0.1			
	upscale	142.7	134.2	~~[illegible]~~ 3.4	134.7	3.2	0.2	250 ppm		
SO_2	zero									
	upscale									
THC	zero	0.2	0.0	0.2	0.5	0.3	0.5			
	upscale	9.7	10.3	0.6	11.7	2.0	~~[illegible]~~ 1.4	100 ppm		
				± 5 %		± 5 %	± 3 %			

LEAK CHECK

Analyzer		cal. back of analyzer response	cal. upstream of analyzer response	bias check (% of span)
CO	zero			
	upscale			
NO_x	zero			
	upscale			
				± 5 %

$$\text{system cal.} = \frac{\text{system cal resp.} - \text{analyzer cal resp.}}{\text{span (range)}} \times 100$$

$$\text{drift} = \frac{\text{final system cal resp.} - \text{initial system cal resp.}}{\text{span (range)}} \times 100$$

$$Cg = (\bar{C} - \bar{C}_o)\frac{C_{ma}}{C_m - C_o}$$

Cg = effluent gas

C = average gas conc.

C_{ma} = actual cal gas upscale

C_o = avg. of zero gas for bias system cal

C_m = avg. of upscale for bias system cal

Calibration Gases

	Mid Cal	High Cal	Tank ID# Mid	Tank ID# High
CO			/	
O_2			/	
CO_2			/	
NO_x			/	
SO_2			/	
THC_{as}			/	

test 3

METHOD 20
FIELD DATA SHEET

Firm Algonquin
Location Hanover NJ
Tester [illegible] SBN AJB
Unit #2
Date 11/14/90
Time 1222 - 1350

P_{obs} _____ in. Hg
T_{AMB} 48 °F
T_{AMB} _____ °K
Wet Bulb 38 °F
Relative Humidity 49 %
P_v 8.551 mm ~~in.~~ Hg

Turbine Load MW/%	NO_x (dry) PPM	O_2 (dry) %	NO_x (15%) PPM	NO_x (ISO) PPM	ISO K Factor
	76.3	17.1	118.5	109.7	0.926

1. $$NO_{x_{15\% O_2}} = \left[NO_{x_{meas}} \text{ (dry)}\right]\left[\frac{(20.9 - 15)}{(20.9 - \%O_2)}\right]$$

Where:

$NO_{x_{meas}}$ = NO_x concentration measured ppm (dry)

$\%O_2$ = $\%O_2$ measured (dry)

2. $$NO_{x_{ISO}} = \left[NO_{x_{15\% O_2}}\right]\left[\text{ISO K Factor}\right]$$

Where:

$$\text{ISO K Factor} = \left(\frac{P_{ref}}{P_{obs}}\right)^{0.5}\left(e^{19\left(H_{amb}-0.00633\right)}\right)\left(\frac{288^{\circ}K}{T_{amb}}\right)^{1.53}$$

$NO_{x_{ISO}}$ = ppm NO_x at 15% O_2 and ISO std. cond.

$NO_{x_{15\% O_2}}$ = ppm NO_x at 15% O_2

P_{ref} = reference combuster inlet absolute pressure at 29.92 in. Hg ambient pressure, in. Hg

P_{obs} = measured combuster inlet absolute pressure at test ambient pressure, in. Hg

e = transcendental constant (2.718)

H_{amb} = ambient specific humidity

T_{amb} = ambient temperature, °K

$$H_{amb} = \frac{\%\ RH}{100}\left[\frac{P_v}{1.61\ (P_{obs}-P_v)}\right]$$

P_v = saturation vapor pressure at T_{AMB}, in. Hg

Rev. 3 4/29/83

TR(/IRQ TAL SULT 3, 1

CONTINUOUS EMISSION MONITORING

FIELD DATA SHEET

Firm: Algonquin
Location: Hanover NJ
Tester: [illegible] SBN AJB

Test Number: T-2-3
Sample Loc.: UNIT #2
Date: 11/14/90
Time: 1222 - 1350

Ambient Temp.: 48
MEL Temp.: 80
Bar. Pressure: 30.14
Vacuum Gauge: 11
Pressure Gauge: 700

Analyzer		INITIAL VALUES (Rack) analyzer cal. response	INITIAL VALUES system cal. response	INITIAL VALUES system cal. bias (% of span)	FINAL VALUES system cal. response	FINAL VALUES system cal. bias (% of span)	FINAL VALUES drift (% of span)	range & units	avg. gas ($\bar{C}$) conc.	effluent gas (Cg) conc.
CO	zero	-0.2	-0.5	0.3	-0.3	0.1	0.2	[illegible] ppm		
	upscale	41.5 / 9.2	7.2	2.0	7.3	2.2	0.1			
O_2	zero	0.1	0.0	0.1	0.0	0.1	0.0	25%		
	upscale	22.7	22.1	2.4	22.0	2.8	0.1			
CO_2	zero	0.1	0.1	0.0	0.1	0.0	0.0	20%		
	upscale	12.1	12.0	0.5	11.9	1.0	0.5			
NO_x	zero	0.0	0.2	0.1	0.7	0.3	0.2	250 ppm		
	upscale	142.7	134.7	3.2	133.0	3.9	0.7			
SO_2	zero									
	upscale									
THC	zero	0.2	0.5	0.3	0.8	0.6	0.3	100 ppm		
	upscale	9.7	11.7	2.0	13.2	3.5	1.5			
				± 5 %		± 5 %	± 3 %			

LEAK CHECK

Analyzer		cal. back of analyzer response	cal. upstream of analyzer response	bias check (% of span)
CO	zero			
	upscale			
NO_x	zero			
	upscale			± 5 %

Calibration Gases

	Mid Cal	High Cal	Tank ID# Mid	Tank ID# High
CO				
O_2				
CO_2				
NO_x				
SO_2				
THC_{as}				

$$\text{system cal.} = \frac{\text{system cal resp.} - \text{analyzer cal resp.}}{\text{span (range)}} \times 100$$

$$\text{drift} = \frac{\text{final system cal resp.} - \text{initial system cal resp.}}{\text{span (range)}} \times 100$$

$$Cg = (\bar{C} - \bar{C}_o)\frac{C_{ma}}{C_m - C_o}$$

Cg = effluent gas

C = average gas conc.

C_{ma} = actual cal gas upscale

C_o = avg. of zero gas for bias system cal

C_m = avg. of upscale for bias system cal

TRC Environmental Consultants, Inc.

EPA Method

FIELD DATA SHEET

Firm Name: Alcanquin
Plant Location: NJ
Test Number: T-1 #1
Sampling Location: Boiler # 1
TRC Project No.: 7638
Date: 11-13-90
Tester: AJB

Orifice No.: D-8
Ambient Temp.: 40 °F
Bar. Press.: 30.05 "Hg
Probe Ident. No.: 301
Filter Ident. No.: —
Duct Area: 20X20 ft²

Nozzle No. & Dia.: — in.
Assumed Moisture: %
Test Duration: 64 min.
Traverse Point Interval: 4 min.
Probe Heater Setting: 250 °F
Filter Temp. Setting: — °F
Dry Gas Meter Y: [illegible]

Nomograph C Factor:
Pitot Coefficient: 0.84
Orifice ΔH_A: 1.80
Test Start Time: 11:30
Test Final Time: 12:40
Leak Test Start: 0.002 CFM@ 15 "Hg
Leak Test Final: 0.002 CFM@ 15 "Hg

Port	Point	Time Min.	Velocity ΔP in H_2O	ΔH in H_2O	T_M in °F	T_M out °F	P_{Stack} in H_2O	T_{Stack} °F	Gas Sample Volume cu. ft.	PROBE	Cyc. Angle ∅	Heater Box Temp.	Temp. of Gas Leaving Condenser °F	Pump Vac. in Hg	Probe Temp. °F	O_2 %	Orsat Flow-rate (lpm) (SCFH)	F.O. Temp °F
1	1	00	190	186	42	42		762	279.51				45	3.5	258			
(11:31)	2	[illegible]	225	186	42	42		777	28[illegible]				42	3.5	391			
(11:35)	3	08	212	186	43	42		780	285.60				41	3.5	427			
(11:41)	4	12	212	186	43	42		781	288.55				41	3.5	424			
(11:45) 2	1	10	261	186	44	43		781	291.88				41	3.5	363			
	2	20	280	186	44	43	1.8	784	295.60				41	3.5	357			
	3	24	280	186	44	43	1.8	786	298.70				41	3.5	358			
	4	28	200	186	44	43		786	301.73				42	3.5	348			
3	1	32	280	186	44	43		782	304.63				41	3.5	~~347~~ 334			
	2	36	295	186	45	43		780	307.70				42	3.5	~~348~~ 304			
	3	40	270	186	45	44		779	310.80				42	3.5	322			
12:26	4	44	250	186	46	44		779	313.85				42	3.5	337			
1230 4	1	48	250	186	46	44		768	316.93				42	3.5	280			
	2	52	245	186	45	45		772	319.79				42	3.5	296			
Average			$\Sigma\sqrt{\Delta P}$															

H_2O Collected: 30.0 gm ml
SG Condition:
SG Weight: 7.0 gm
Total Volume Collected: ml

Orsat Bag Sample Triplicate Analysis, %

CO_2	O_2	CO	N_2

COMMENTS:

Part 2

TRC Environmental Consultants, Inc.

EPA Method

FIELD DATA SHEET

Firm Name: Algonquin
Plant Location: Alconquin
Test Number: T-1
Sampling Location: Boiler #1
TRC Project No.: 7638
Date: 11-13-90
Tester: [illegible]

Orifice No.: D 8
Ambient Temp.: 40 °F
Bar. Press.: 30.05 "Hg
Probe Ident. No.: 301
Filter Ident. No.: —
Duct Area: 20x20 ft²

Nozzle No. & Dia.: — in.
Assumed Moisture: 3 %
Test Duration: 64 min.
Traverse Point Interval: min.
Probe Heater Setting: 250 °F
Filter Temp. Setting: — °F
Dry Gas Meter Y: 1.01

Nomograph C Factor: —
Pitot Coefficient: 0.84
Orifice ΔH_A: 1.80
Test Start Time: 1130
Test Final Time: 1246
Leak Test Start: 0.002 CFM@ 15 "Hg
Leak Test Final: 0.002 CFM@ 15 "Hg

Port	Point	Time Min.	Velocity ΔP in H_2O	ΔH in H_2O	T_M in °F	T_M out °F	P_{Stack} in H_2O	T_{Stack} °F	Gas Sample Volume cu. ft.	PROBE	Cyc. Angle ø	Heater Box Temp.	Temp. of Gas Leaving Condenser °F	Pump Vac. in Hg	Probe Temp. °F	O_2 %	Orsat Flow-rate (lpm) (SCFH)	F.O. Temp °F
	3	60	240	186	45	45		776	32312				41	3.5	301			
	4	60	210	186	46	44		781	32622				42	3.5	306			
		64							32731				42	3.5				
									498									
Average			$\Sigma\sqrt{\Delta P}$ 156	186	44	43	-18	778										

338

H_2O Collected: ml
SG Condition:
SG Weight: gm
Total Volume Collected: ml

Orsat Bag Sample Triplicate Analysis, %

CO_2	O_2	CO	N_2

COMMENTS:

TRC Environmental Consultants, Inc.

EPA Method 5

FIELD DATA SHEET

Firm Name: Akzo
Plant Location: NJ
Test Number: T-2 #1
Sampling Location: Boiler #1
TRC Project No.: 7638
Date: 11-13-90
Tester: ASB

Orifice No.: D8
Ambient Temp.: 45 °F
Bar. Press.: 30.05 "Hg
Probe Ident. No.: 301
Filter Ident. No.: —
Duct Area: 20" x 20" ft²

Nozzle No. & Dia.: — in.
Assumed Moisture: 3 %
Test Duration: ~~60~~ 64 min.
Traverse Point Interval: 4 min.
Probe Heater Setting: 250 °F
Filter Temp. Setting: — °F
Dry Gas Meter Y: 1.01

Nomograph C Factor: —
Pitot Coefficient: .84
Orifice ΔH_A: 1.80
Test Start Time: 1400
Test Final Time: 1524
Leak Test Start: 0.002 CFM 15 "Hg
Leak Test Final: 0.002 CFM 6 "Hg

Port	Point	Time Min.	Velocity ΔP in H_2O	ΔH in H_2O	T_M in °F	T_M out °F	P_{Stack} in H_2O	T_{Stack} °F	Gas Sample Volume cu. ft.	PROBE	Cyc. Angle °	Heater Box Temp.	Temp. of Gas Leaving Condenser °F	Pump Vac. in Hg	Probe Temp. °F	O_2 %	Orsat Flow-rate (lpm) (SCFH)	F.O Temp °F
4	1	40	.200	1.86	46	45		78.8	332.71				43	3.0	265			
	2	40	.235	1.86	46	45		78.8	336.24				42	3.0	285			
	3	80	.230	1.86	46	45		78.8	339.30				41	3.0	290			
(1417)	4	120	.230	1.86	47	46		78.7	342.45				41	3.0	300			
(1418) 3	1	16	.310	1.86	47	46		78.9	345.53				41	3.0	257			
	2	20	.260	1.86	47	46		76.2	348.89				41	3.0	285			
	3	24	.195	1.86	47	46		74.0	352.05				41	3.0	297			
(1445)	4	28	.160	1.80	47	46		70.6	355.17				41	3.0	302			
(1450) 2	1	32	.180	1.86	47	46		66.2	358.30				41	3.0	258			
	2	36	.150	1.86	47	46		64.1	361.39				41	3.0	281			
	3	40	.190	1.86	47	46		63.8	364.54				41	3.0	287			
	4	44	.180		47	46		63.4	367.69				41	3.0	296			
stop (1504) (1515) 1	1	48	.45	✓	47	46		62.5	370.81				41	3.0	203			
start	2	52	.99		47	46		62.2	374.23				41	3.0	259			
Average			$\Sigma\sqrt{\Delta P}$	1.86														

H_2O Collected: ml
SG Condition:
SG Weight: gm
Total Volume Collected: ml

Orsat Bag Sample Triplicate Analysis, %

CO_2	O_2	CO	N_2

COMMENTS:

TRC Environmental Consultants, Inc.

Part 2

EPA Method

FIELD DATA SHEET

Firm Name: Allergan
Plant Location: NJ
Test Number: T-2
Sampling Location: Boiler #1
TRC Project No.: 7638
Date: 11/14/90
Tester: AJB

Orifice No.: D8
Ambient Temp.: 45 °F
Bar. Press.: 30.05 "Hg
Probe Ident. No.: 301
Filter Ident. No.: —
Duct Area: 20x20 ft²

Nozzle No. & Dia.: — in.
Assumed Moisture: 3 %
Test Duration: 64 min.
Traverse Point Interval: 4 min.
Probe Heater Setting: 250 °F
Filter Temp. Setting: — °F
Dry Gas Meter Y: 1.01

Nomograph C Factor: —
Pitot Coefficient: 0.84
Orifice ΔH_A: 1.80
Test Start Time: 1400
Test Final Time: 1528
Leak Test Start: 0.002 CFM 15 "Hg
Leak Test Final: 0.002 CFM 6 "Hg

Port	Point	Time Min. (3-5)	Velocity ΔP in H_2O (6-10)	ΔH in H_2O (12-15)	T_M in °F (18-20)	T_M out °F (23-25)	P_{Stack} in H_2O (26-30)	T_{Stack} °F (32-35)	Gas Sample Volume cu. ft. (40-45)	PROBE (50)	Cyc. Angle ∅ (52-53)	Heater Box Temp.	Temp. of Gas Leaving Condenser °F	Pump Vac. in Hg	Probe Temp. °F	O_2 %	Orsat Flow-rate (lpm) (SCFH)	F.O. Temp °F
	3	60	0.89	1.86	47	46	-.077	620	37740						269			
(1528)	4	60							38056									
Average			$\Sigma\sqrt{\Delta P}$ 1.38	1.86	47	46	-.077	712	47.85						277			

H_2O Collected: 31 ml
SG Condition: [illegible]
SG Weight: 8.4 gm
Total Volume Collected: 39.4 ml

Orsat Bag Sample Triplicate Analysis, %

CO_2	O_2	CO	N_2

COMMENTS:

EPA Method

TRC Environmental Consultants, Inc.

FIELD DATA SHEET

Firm Name: Alcoma
Plant Location: NJ
Test Number: T-3
Sampling Location: Duct 2
TRC Project No.: 7683
Date: 11-14-90
Tester: ASB

Orifice No.: P-8
Ambient Temp.: 55 °F
Bar. Press.: 30.02 "Hg
Probe Ident. No.: 703
Filter Ident. No.: —
Duct Area: 20x20 ft²

Nozzle No. & Dia.: — in.
Assumed Moisture: 3 %
Test Duration: 64 min.
Traverse Point Interval: 4 min.
Probe Heater Setting: 250 °F
Filter Temp. Setting: — °F
Dry Gas Meter Y: 1.01

Nomograph C Factor:
Pitot Coefficient: .84
Orifice ΔH_A: 1.86
Test Start Time: 15:40
Test Final Time: 17:05
Leak Test Start: 0.001 CFM @ 10 "Hg
Leak Test Final: 0.002 CFM @ 5 "Hg

1540

Port	Point	Time Min.	Velocity ΔP in H₂O	ΔH in H₂O	T_M in °F	T_M out °F	P_{Stack} in H₂O	T_{Stack} °F	Gas Sample Volume cu. ft.	PROBE	Cyc. Angle ∅	Heater Box Temp.	Temp. of Gas Leaving Condenser °F	Pump Vac. in Hg	Probe Temp. °F	O_2 %	Orsat Flow-rate (lpm) (SCFH)	F.O. Temp °F
1	1	02	.270	1.86	55	55		748	531.115				(44.462)	3.5	342			
	2	04	.260	1.86	54	54		768	537.67				44	3.5	342			
	3	08	.240	1.86	54	54		770	541.15				44	3.5	342			
	4	12	.230	1.86	55	54		779	544.63				48	3.5	342			
start (1556) 2	1	16	.200	1.86	55	54		792	548.09				47	3.5	342			
start (1601)	2	20	.230	1.86	54	54		793	551.53				49	3.5	342			
	3	24	.210	1.86	55	54		789	554.88				50	3.5	342			
	4	28	.220	1.86	55	54		790	558.00				50	3.0	342			
Stop (1617) 3	1	32	.260	1.86	54	53		797	561.11				48	3.0	342			
(1623 Start)	2	36	.250	1.86	54	53		796	564.22				49	3.0	342			
	3	40	.210	1.86	53	53		794	567.45				49	3.0	342			
	4	44	.220	1.86	53	53		794	570.50				49	3.0	342			
1634 4	1	48	.160	1.86	53	53	-.14	794	573.63				49	3.0	342			
1643	2	50	.170	1.86	52	53		794	576.73					3.0	342			
Average			$\Sigma\sqrt{\Delta P}$															

H_2O Collected: 37 ml
SG Condition:
SG Weight: 10 gm
Total Volume Collected: 47 ml

Orsat Bag Sample Triplicate Analysis, %

CO_2	O_2	CO	N_2

COMMENTS:

Part 2

EPA Metho

TRC Environmental Consultants, Inc.

FIELD DATA SHEET

Firm Name: Alcanger
Plant Location: NT
Test Number: T-3
Sampling Location: Boiler 1
TRC Project No.: 7638
Date: 11/14/90
Tester: AJB

Orifice No.: D8
Ambient Temp.: 55 °F
Bar. Press.: 30.20 "Hg
Probe Ident. No.: 302
Filter Ident. No.: —
Duct Area: 20x20 ft²

Nozzle No. & Dia.: — in.
Assumed Moisture: 3 %
Test Duration: 64 min.
Traverse Point Interval: 4 min.
Probe Heater Setting: 250 °F
Filter Temp. Setting: — °F
Dry Gas Meter Y: 1.01

Nomograph C Factor: —
Pitot Coefficient: 0.84
Orifice ΔH_A: 1.80
Test Start Time: 1540
Test Final Time: 1700
Leak Test Start: 0.007 CFM@ 10 "Hg
Leak Test Final: 0.007 CFM@ 5 "Hg

Port	Point	Time Min. (3-5)	Velocity ΔP in H_2O (6-10)	ΔH in H_2O (12-15)	T_M in °F (18-20)	T_M out °F (23-25)	P_{Stack} in H_2O (26-30)	T_{Stack} °F (32-35) (788)	Gas Sample Volume cu. ft. (40-45)	PROBE (50)	Cyc. Angle ø (52-53)	Heater Box Temp.	Temp. of Gas Leaving Condenser °F	Pump Vac. in Hg	Probe Temp. °F	O_2 %	Orsat Flow-rate (lpm) (SCFH)	F.O. Temp °F
	3	56	110	186	52	52		790	579.00				50	3.0	342			
	4	60	100	186	52	52		788	583.10				51	3.0	342			
1700		64							586.16									
Average			$\Sigma\sqrt{\Delta P}$ 144	186		54	-140	786	52.01									

H_2O Collected: ml
SG Condition:
SG Weight: gm
Total Volume Collected: ml

Orsat Bag Sample Triplicate Analysis, %

CO_2	O_2	CO	N_2

COMMENTS:

TRC Environmental Consultants, Inc.

EPA Method

FIELD DATA SHEET

Firm Name: Algonquin
Plant Location: NJ
Test Number: T-1
Sampling Location: Boiler 2
TRC Project No.: 7635
Date: 11-14-90
Tester: RSB

Orifice No.: D-8
Ambient Temp.: 36 °F
Bar. Press.: 30.14 "Hg
Probe Ident. No.: 3c.2
Filter Ident. No.: —
Duct Area: 20"x20" ft²

Nozzle No. & Dia.: — in.
Assumed Moisture: 3 %
Test Duration: 64 min.
Traverse Point Interval: 4 min.
Probe Heater Setting: 250 °F
Filter Temp. Setting: — °F
Dry Gas Meter Y: 1.01

Nomograph C Factor: —
Pitot Coefficient: .84
Orifice ΔH_A: 1.86
Test Start Time: 730
Test Final Time: 857
Leak Test Start: 0.008 CFM 15 "Hg
Leak Test Final: 0.002 CFM 6 "Hg

Port	Point	Time Min. (3 4 5)	Velocity ΔP in H_2O (6 7 8 9 10)	ΔH in H_2O (12 13 14 15)	T_M in °F (16 19 20)	T_M out °F (23 24 25)	P_{Stack} in H_2O (26 27 28 29 30)	T_{Stack} °F (32 33 34 35)	Gas Sample Volume cu. ft. (40 41 42 43 44 45)	PROBE (50)	Cyc. Angle (52 53)	Heater Box Temp.	Temp. of Gas Leaving Condenser °F	Pump Vac. in Hg	Probe Temp. °F	O_2 %	Orsat Flow-rate (lpm) (SCFH)	F.O. Temp °F
1	1	00	245	186	37	37	-13	780	35413				35	4.5	247			
	2	40	250	186	38	37		780	38760				37	4.5	296			
	3	80	240	186	39	37		781	39063				41	4.5	73			
	4	120	240	186	39	38		783	39445				40	4.5	77			
2	1	160	240	186	39	38		786	39673				40	4.5	86			
	2	200	250	186	39	38	-190	786	40000				41	4.5	270			
	3	240	240	186	40	38		786	40290				43	4.5	361			
	4	280	200	186	40	38		785	40596				43	4.5	348			
3	1	320	240	186	39	38		786	40903				41	4.5	234			
	2	360	245	186	40	38	-120	785	41215				42	4.5	236			
	3	400	230	186	40	34		786	41523				43		296			
	4	440	210	186	41	39		788	41826				44	4.5	314			
4	1	480	205	186	40	39		787	42128				40	4.5	340			
	2	520	170	186	40	39		788	42437				43	4.5	342			
Average			$\Sigma\sqrt{\Delta P}$															

730
Start 1 min late
(21)
Stop (746)
Start (750)
Stop (807)
Start (814)
Part 1
Stop (831)
Start (841)

H_2O Collected: 65.45 ml
SG Condition: —
SG Weight: 7.8 gm
Total Volume Collected: 52.8 ml

Orsat Bag Sample Triplicate Analysis, %

CO_2	O_2	CO	N_2

COMMENTS:

Part 2

TRC Environmental Consultants, Inc.

EPA Method 5

FIELD DATA SHEET

Firm Name: Algonquin
Plant Location: NT
Test Number: T-1
Sampling Location: Baghouse
TRC Project No.: 7638
Date: 11/14/90
Tester: ATB

Orifice No.: D8
Ambient Temp.: 36 °F
Bar. Press.: 30.14 "Hg
Probe Ident. No.: 302
Filter Ident. No.: —
Duct Area: 20x20 ft²

Nozzle No. & Dia.: — in.
Assumed Moisture: 3 %
Test Duration: 64 min.
Traverse Point Interval: 4 min.
Probe Heater Setting: 250 °F
Filter Temp. Setting: — °F
Dry Gas Meter Y: 1.01

Nomograph C Factor: —
Pitot Coefficient: 0.84
Orifice $\Delta H_@$: 1.80
Test Start Time: 730
Test Final Time: 857
Leak Test Start: 0.008 CFM @ 15 "Hg
Leak Test Final: 0.002 CFM @ 6 "Hg

Port	Point	Time Min. (3-5)	Velocity ΔP in H_2O (6-10)	ΔH in H_2O (12-15)	T_M in °F (18-20)	T_M out °F (23-25)	P_{Stack} in H_2O (26-30)	T_{Stack} °F (32-35)	Gas Sample Volume cu. ft. (40-45)	PROBE (50)	Cyc. Angle ∅ (52-53)	Heater Box Temp.	Temp. of Gas Leaving Condenser °F	Pump Vac. in Hg	Probe Temp. °F	O_2 %	Orsat Flow-rate (lpm) (SCFH)	F.O. Temp °F
	3	56	55	186	41	39	-120	78	42746				39		340			
	4	60	63	186	41	39		79	43050				44		341			
		64							43358									
Average			$\Sigma\sqrt{\Delta P}$ 143	186		39	-140	785	49.45									

H_2O Collected: ml
SG Condition:
SG Weight: gm
Total Volume Collected: ml

Orsat Bag Sample Triplicate Analysis, %

CO_2	O_2	CO	N_2

COMMENTS:

TRC Environmental Consultants, Inc.

EPA Method

FIELD DATA SHEET

Firm Name: Akanguin
Plant Location: NJ
Test Number: T-2
Sampling Location: Boiler 2
TRC Project No.: 7638
Date: 11-14-90
Tester: AJB

Orifice No.: D-8
Ambient Temp.: ~~38~~ 45 °F
Bar. Press.: 30.14 "Hg
Probe Ident. No.: 302
Filter Ident. No.:
Duct Area: ft²

Nozzle No. & Dia.: — in.
Assumed Moisture: 3 %
Test Duration: 64 min.
Traverse Point Interval: 4 min.
Probe Heater Setting: 250 °F
Filter Temp. Setting: — °F
Dry Gas Meter Y: 1.01

Nomograph C Factor: —
Pitot Coefficient: .84
Orifice ΔH_A: 1.86
Test Start Time: 9:55
Test Final Time: 11:21
Leak Test Start: 0.002 CFM@ 5 "Hg
Leak Test Final: 0.002 CFM@ 5 "Hg

955

Port	Point	Time Min.	Velocity ΔP in H_2O	ΔH in H_2O	T_M in °F	T_M out °F	P_{Stack} in H_2O	T_{Stack} °F	Gas Sample Volume cu. ft.	PROBE	Cyc. Angle ∅	Heater Box Temp.	Temp. of Gas Leaving Condenser °F	Pump Vac. in Hg	Probe Temp. °F	O_2 %	Orsat Flow-rate (lpm) (SCFH)	F.O. Temp °F
1	1	0	1.60 ~~35~~	1.86	42	42		642	433.82				40	3.0	105			
	2	4	160	1.86	43	41	-1.40	782	437.07				40	3.0	140			
	3	8	220	1.86	43	42		788	440.16				43	3.0	244			
(10:11) stop	4	12	225	1.86	44	42		790	443.25				44	3.0	276			
(10:12) start 2	1	16	330	1.86	44	42		797	446.30				43	3.0	210			
	2	20	335	1.86	44	43		796	449.45				44	3.0	170			
	3	24	220	1.86	45	43		794	452.56				46	3.0	281			
(1032) stop	4	28	210	1.86	45	43	-1.50	795	455.70				46	3.0	290			
(1043) start 3	1	32	360	1.86	45	44		798	458.77				43	3.0	90			
	2	36	350	1.86	45	44		797	461.84				45	3.0	290			
	3	40	230	1.86	46	44		796	464.95				47	3.0	91			
stop (1059)	4	44	240	1.86	46	45	-1.90	797	468.05				47	3.0	87			
start (1104) 4	1	48	180	1.86	46	45		786	471.28				44	3.0	83			
	2	52	190	1.86	47	45		785	474.26					3.0	182			
Average			$\Sigma\sqrt{\Delta P}$															

49.74

H_2O Collected: 27 ml
SG Condition: 8
SG Weight: 9 gm
Total Volume Collected: 36 ml

Orsat Bag Sample Triplicate Analysis, %

CO_2	O_2	CO	N_2

COMMENTS:

TRC Environmental Consultants, Inc.

EPA Method

Part 2

FIELD DATA SHEET

Firm Name: Alcoa
Plant Location: OT
Test Number: T-2
Sampling Location: Baghouse
TRC Project No.: 7630
Date: 11/14/90
Tester: ATB

Orifice No.: D8
Ambient Temp.: 45 °F
Bar. Press.: 30.14 "Hg
Probe Ident. No.: 302
Filter Ident. No.: —
Duct Area: 20x20 ft²

Nozzle No. & Dia.: — in.
Assumed Moisture: 3 %
Test Duration: 64 min.
Traverse Point Interval: 4 min.
Probe Heater Setting: 250 °F
Filter Temp. Setting: — °F
Dry Gas Meter Y: 1.01

Nomograph C Factor: —
Pitot Coefficient: 0.84
Orifice $\Delta H_@$: 1.80
Test Start Time: 955
Test Final Time: 1121
Leak Test Start: 0.002 CFM @ 15 "Hg
Leak Test Final: 0.002 CFM @ 5 "Hg

Port	Point	Time Min. (3-10)	Velocity ΔP in H_2O (6-10)	ΔH in H_2O (12-15)	T_M in °F (18-20)	T_M out °F (23-25)	P_{Stack} in H_2O (26-30)	T_{Stack} °F (32-35)	Gas Sample Volume cu. ft. (40-45)	PROBE (50)	Cyc. Angle (52-53)	Heater Box Temp.	Temp. of Gas Leaving Condenser °F	Pump Vac. in Hg	Probe Temp. °F	O_2 %	Orsat Flow-rate (lpm) (SCFH)	F.O. Temp °F
	3	56	240	186	47	45		79	472.37				48	3.0	460			
	4	62	235	186	47	46		79	480.45				48	3.0	108			
		64							483.56									
Average			$\Sigma\sqrt{\Delta P}$ 194			44	-1.60	784	49.74									

H_2O Collected: ml
SG Condition:
SG Weight: gm
Total Volume Collected: ml

Orsat Bag Sample Triplicate Analysis, %

CO_2	O_2	CO	N_2

COMMENTS:

TRC Environmental Consultants, Inc.

EPA Method

FIELD DATA SHEET

Firm Name: Alumax
Plant Location: NJ
Test Number: T-3
Sampling Location: Boiler 2
TRC Project No.: 7638
Date: 11-14-90
Tester: [illegible]

Orifice No.: D-8
Ambient Temp.: 51 °F
Bar. Press.: 30.14 "Hg
Probe Ident. No.: 304
Filter Ident. No.: —
Duct Area: 20x20 ft²

Nozzle No. & Dia.: — in.
Assumed Moisture: 3 %
Test Duration: 64 min.
Traverse Point Interval: 4 min.
Probe Heater Setting: 250 °F
Filter Temp. Setting: — °F
Dry Gas Meter Y: 1.01

Nomograph C Factor: —
Pitot Coefficient: .84
Orifice ΔH_A: 1.86
Test Start Time: 11:22
Test Final Time: 13:50
Leak Test Start: 0.000 CFM 5 "Hg
Leak Test Final: 0.000 CFM 5 "Hg

	Port	Point	Time Min.	Velocity ΔP in H_2O	ΔH in H_2O	T_M in °F	T_M out °F	P_{Stack} in H_2O	T_{Stack} °F	Gas Sample Volume cu. ft.	PROBE	Cyc. Angle ∅	Heater Box Temp.	Temp. of Gas Leaving Condenser °F	Pump Vac. in Hg	Probe Temp. °F	O_2 %	Orsat Flow-rate (lpm) (SCFH)	F.O. Temp °F
	1	1	0	.250	1.86	49	48		783	483773				42	2.5	342			
		2	4	.255	1.86	50	47		793	487172				43	2.5	342			
		3	8	.200	1.86	50	49		795	490271				45	2.5	341			
		4	12	.210	1.86	51	49		799	493371				47	2.5	342			
Start (1240)	2	1	16	.265	1.86	51	50		805	496744				47	2.5	342			
		2	20	.275	1.86	51	50		805	499555				50	2.5	340			
		3	24	.200	1.86	52	50		804	502668				50	2.5	342			
		4	28	.210	1.86	52	50		804	505779				51	2.5	342			
Stop (1301)	3	1	32	.330	1.86	52	51		808	508887				49	2.5	342			
Start (1321)		2	36	.320	1.86	52	51		807	512000				49	3.0	342			
		3	40	.240	1.86	52	51	1.60	806	515100				51	3.0	342			
		4	44	.220	1.86	52	51	1.46	807	518200				52	3.0	342			
Stop 1344 Start 1354	4	1	48	.250	1.86	53	54		806	521300				48	3.0	342			
		2	50	.240	1.86	53	52		805	524344									
Average				$\Sigma\sqrt{\Delta P}$															

H_2O Collected: 41 ml
SG Condition: 10.7
SG Weight: — gm
Total Volume Collected: 41.7 ml

Orsat Bag Sample Triplicate Analysis, %

CO_2	O_2	CO	N_2

COMMENTS:

123 TRC ENVIRONMENTAL CONSULTANTS ALGONQUIN GAS TRANSMISSION COMPANY HANOVER NJ EMISSION COMPLIANCE PROGRAM

1114	01	02	03	04	05	06	07	08	09	10	11	12	13	14	15	16
100	CO		OXYGEN		NOX		CO2		CO		THC		STACK		MELS	
200	PPM		PERCENT		PPM		PERCENT		PPM		PPM C3		TEMP		TEMP	
16:06:00	7.8		17.2		86.7		2.5		-4.0	16.000	-1.7		OPEN F		87.3F	
200	7.8		17.2		86.9		2.5		-2.6		-0.4		OPEN		86.7	
300	7.9		16.0		52.2		1.9		-4.2		1.3		OVRLD		86.1	
16:08:00	7.7		17.2		87.0		2.5		-2.0	4.0000	-0.1		OPEN F		86.2F	
200	7.7		17.2		86.6		2.5		-3.3		-0.1		OPEN		86.7	
300	8.1		16.6		50.3		2.0		-4.2		1.2		OVRLD		86.1	
16:10:00	7.7		17.2		87.0		2.5		-6.0	36.000	0.0		OPEN F		87.2F	
200	7.8		17.2		86.7		2.5		-4.0		-0.1		OPEN		86.7	
300	8.4		16.6		49.8		2.0		-4.2		1.2		OVRLD		86.1	
16:12:00	7.9		17.2		87.5		2.5		-6.0	16.000	0.1		OPEN F		87.1F	
200	7.7		17.2		87.4		2.5		-4.0		0.0		OPEN		87.0	
300	8.6		16.4		52.7		2.1		-4.2		1.2		OVRLD		86.1	
16:14:00	7.6		17.2		87.2		2.5		-2.0	4.0000	0.0		OPEN F		86.9F	
200	7.7		17.2		87.3		2.5		-4.2		0.0		OPEN		87.0	
300	8.9		17.0		55.5		1.8		-4.2		1.2		OVRLD		86.1	
16:16:00	7.8		17.2		87.0		2.5		-4.0	36.000	0.0		OPEN F		87.1F	
200	7.6		17.2		86.9		2.5		-4.3		0.0		OPEN		87.1	
300	9.0		17.5		58.4		1.8		-4.2		1.1		OVRLD		86.2	
16:18:00	7.8		17.2		86.0		2.5		-4.0	16.000	0.1		OPEN F		87.5F	
200	7.6		17.2		86.6		2.5		-3.7		0.0		OPEN		87.3	
300	9.0		18.1		61.2		1.9		-4.2		1.1		OVRLD		86.2	
16:20:00	7.9		17.2		86.7		2.0		-4.0	16.000	0.6		OPEN F		87.7F	
200	7.7		17.2		86.5		2.4		-3.8		0.1		OPEN		87.3	
300	9.3		18.1		64.0		2.0		-4.2		1.1		OVRLD		86.3	
							OUT OF STACK									
16:22:00	4.0		20.5		9.0		1.7		-4.0	16.000	0.0		OPEN F		87.5F	
200	1.7		19.9		49.5		0.8		-3.8		0.5		OPEN		87.6	
300	9.4		18.1		64.3		2.0		-4.2		1.1		OVRLD		86.3	
						CPM		PART 2								
16:24:00	7.8		17.2		84.5		2.5		-4.0	16.000	0.1		OPEN F		87.0F	
200	4.4		18.9		53.4		1.5		-4.1		0.3		OPEN		87.3	
300	9.7		17.9		67.1		2.1		-4.2		1.1		OVRLD		86.3	

TRC ENVIRONMENTAL CONSULTANTS ALGONQUIN GAS TRANSMISSION COMPANY HANOVER NJ EMISSION COMPLIANCE PROGRAM

123 1114 100 200	01 CO PPM	02	03 OXYGEN PERCENT	04	05 NOX PPM	06	07 CO2 PERCENT	08	09 CO PPM	10	11 THC PPM C3	12	13 STACK TEMP	14	15 NELS TEMP	16
16:26:00	7.6		17.2		87.5		2.5		-6.0	36.000	0.3		OPEN F		86.1F	
200	7.8		17.2		86.8		2.5		-5.0		0.2		OPEN		86.0	
300	9.9		17.8		70.0		2.2		-4.3		1.1		OURLD		86.4	
16:28:00	7.5		17.2		87.5		2.5		-4.0	16.000	0.1		OPEN F		86.7F	
200	7.9		17.2		87.1		2.5		-4.2		0.2		OPEN		86.3	
300	10.2		17.6		72.8		2.3		-4.3		1.1		OURLD		86.3	
16:30:00	7.7		17.2		88.0		2.5		-4.0	16.000	0.1		OPEN F		86.8F	
200	7.9		17.2		87.3		2.5		-4.1		0.1		OPEN		86.3	
300	10.5		17.5		75.7		2.3		-4.3		1.0		OURLD		86.5	
16:32:00	7.8		17.2		87.5		2.5		-4.0	16.000	0.0		OPEN F		87.6F	
200	7.6		17.2		87.6		2.5		-4.0		0.1		OPEN		86.8	
300	10.7		17.3		78.6		2.4		-4.3		0.0		OURLD		86.6	
16:34:00	7.6		17.2		87.5		2.5		-4.0	16.000	0.1		OPEN F		87.5F	
200	7.7		17.2		87.5		2.5		-4.0		0.1		OPEN		87.1	
300	7.9		17.3		81.0		2.4		-4.3		0.0		OURLD		86.7	
16:36:00	8.0		17.2		88.2		2.5		-4.0	16.000	0.1		OPEN F		87.7F	
200	7.7		17.2		88.8		2.5		-4.3		0.1		OPEN		87.7	
300	7.6		17.3		82.8		2.4		-4.3		0.0		OURLD		86.7	
16:38:00	7.6		17.2		88.2		2.5		-4.0	16.000	0.1		OPEN F		87.5F	
200	7.8		17.2		88.5		2.5		-4.4		0.1		OPEN		87.5	
300	7.6		17.3		82.8		2.4		-4.3		0.0		OURLD		86.8	
16:40:00	8.1		17.2		87.7		2.5		-4.0	16.000	0.1		OPEN F		86.1F	
200	7.8		17.2		88.5		2.5		-4.4		0.1		OPEN		87.2	
300	7.6		17.3		82.9		2.4		-4.3		0.0		OURLD		86.8	
16:42:00	8.2		17.2		89.0		2.5		-2.0	4.0000	0.5		OPEN F		84.3F	
200	7.8		17.2		87.9		2.4		-3.5		0.4		OPEN		85.0	
300	7.6		17.3		83.0		2.4		-4.2		0.0		OURLD		86.7	
16:44:00	7.8		17.1		90.5		2.5		-4.0	16.000	0.7		OPEN F		81.9F	
200	7.9		17.1		88.6		2.4		-4.0		0.3		OPEN		83.8	
300	7.6		17.3		83.3		2.4		-4.2		0.0		OURLD		86.6	

TRC ENVIRONMENTAL CONSULTANTS ALGONQUIN GAS TRANSMISSION COMPANY HANOVER NJ EMISSION COMPLIANCE PROGRAM

123 1114 100 200	01 CO PPM	02	03 OXYGEN PERCENT	04	05 NOX PPM	06	07 CO2 PERCENT	08	09 CO PPM	10	11 THC PPM C3	12	13 STACK TEMP	14	15 MELS TEMP	16
16:46:00	8.4		17.1		95.2		2.5		-2.0	4.0000	0.0		OPEN F		81.6F	
200	8.4		17.1		94.3		2.5		-3.3		0.1		OPEN		81.6	
300	7.6		17.3		83.6		2.4		-4.1		0.0		OVRLD		86.4	
16:48:00	7.9		17.2		97.2		2.5		-4.0	16.000	-0.1		OPEN F		81.2F	
200	8.3		17.1		95.6		2.5		-3.4		0.0		OPEN		81.4	
300	7.6		17.3		84.1		2.4		-4.1		0.0		OVRLD		86.2	
16:50:00	7.7		17.2		98.0		2.5		-2.0	4.0000	-0.3		OPEN F		80.9F	
200	8.0		17.1		96.5		2.5		-3.6		0.0		OPEN		81.2	
300	7.6		17.3		84.6		2.4		-4.0		0.0		OVRLD		86.0	
16:52:00	7.5		17.2		98.2		2.5		-6.0	36.000	-0.4		OPEN F		80.8F	
200	7.4		17.2		98.2		2.5		-4.0		-0.3		OPEN		80.7	
300	7.6		17.3		85.2		2.4		-4.1		0.0		OVRLD		85.8	
16:54:00	7.6		17.2		98.0		2.5		-4.0	16.000	-0.4		OPEN F		79.9F	
200	7.5		17.2		98.2		2.5		-4.0		-0.4		OPEN		80.6	
300	7.6		17.3		85.6		2.4		-4.0		0.0		OVRLD		85.5	
16:56:00	7.5		17.2		97.7		2.5		-4.0	16.000	-0.4		OPEN F		79.9F	
200	7.6		17.2		98.0		2.5		-3.6		-0.4		OPEN		79.6	
300	7.6		17.3		86.1		2.4		-4.0		0.0		OVRLD		85.3	
16:58:00	7.7		17.2		98.2		2.5		-4.0	16.000	-0.6		OPEN F		79.9F	
200	7.6		17.2		98.0		2.5		-4.4		-0.5		OPEN		79.7	
300	7.6		17.3		86.6		2.4		-4.0		0.0		OVRLD		85.2	
						TEST COMPLETE										
17:00:00	8.0		17.1		97.0		2.5		-4.0	16.000	-1.0		OPEN F		79.3F	
200	7.7		17.1		97.9		2.5		-4.4		-0.5		OPEN		79.7	
300	7.6		17.3		87.3		2.4		-4.0		0.0		OVRLD		84.9	
17:05:43	-0.3		0.0		0.7		0.2	SYSTEM ZERO	-4.0	16.000	-0.2		OPEN F		79.0F	
200	-0.4		0.0		0.6		0.2		-4.0		-0.7		OPEN		79.1	
300	7.1		16.2		82.4		2.3		-4.0		0.0		OVRLD		84.5	
17:17:54	-0.3		0.7		150.3	SYSTEM SPAN	0.2		-4.0	16.000	-0.4		OPEN F		78.5F	
200	-0.1		12.1		63.4		0.21		-3.8		-0.4		OPEN		78.3	
300	5.5		13.4		82.8		1.8		-3.9		0.0		OVRLD		82.8	

125 TRC ENVIRONMENTAL CONSULTANTS ALGONQUIN GAS TRANSMISSION COMPANY HANOVER NJ EMISSION COMPLIANCE PROGRAM

1114	01	02	03	04	05	06	07	08	09	10	11	12	13	14	15	16
100	CO		OXYGEN		NOX		CO2		CO		THC		STACK		MELS	
200	PPM		PERCENT		PPM		PERCENT		PPM		PPM C3		TEMP		TEMP	
17:21:42	-0.1		22.0 SYSTEM SPAN		3.0		0.2		-4.0	16.000	-1.0		OPEN F		76.8F	
200	0.0		17.0		64.6		0.2		-3.8		-1.1		OPEN		77.3	
300	4.9		12.4		87.9		1.7		-3.9		-0.1		OURLD		82.2	
17:24:40	-1.3		0.6		0.5		12.0 SYSTEM SPAN		-4.0	16.000	-0.6		OPEN F		77.1F	
200	-0.4		16.1		23.2		[illegible]		-3.4		-0.9		OPEN		77.2	
300	4.5		12.1		84.8		1.9		-3.8		-0.2		OURLD		81.5	
17:27:52	7.1 SYSTEM		0.0		-0.7		0.7		-4.0	16.000	-1.5		OPEN F		76.2F	
200	1.9		0.0		-0.3		6.4		-3.6		-0.6		OPEN		76.7	
300	4.2		11.6		81.9		2.2		-3.8		-0.2		OURLD		81.2	
17:31:46	0.1		21.3		-0.7		0.2		-4.0	16.000	9.1 SYSTEM SPAN		OPEN F		75.9F	
200	1.2		14.8		-0.6		0.2		-4.0		[illegible]		OPEN		75.7	
300	4.2		10.4		76.0		2.1		-3.9		-0.1		OURLD		80.5	
17:37:03	0.3		0.1		-0.2 RACK ZERO		0.1		-2.0	4.0000	4.9		OPEN F		74.7F	
200	0.2		[illegible]		-0.7		0.1		-3.5		5.0		OPEN		75.3	
300	3.5		10.1		67.1		1.9		-3.7		0.5		OURLD		79.3	
17:39:27	0.6		0.1		153.0 RACK SPAN		0.1		-6.0	36.000	4.5		OPEN F		OPEN F	
200	0.2		0.2		18.2		0.1		-3.3		4.8		OPEN		75.2	
300	3.2		9.6		64.2		1.8		-3.6		0.7		OURLD		78.9	
17:45:30	0.7		2.9		74.0 RACK MID		0.1		-4.0	16.000	4.4		OPEN F		67.2F	
200	0.5		[illegible]		[illegible]		0.1		-4.0		4.3		OPEN		67.1	
300	2.5		8.1		72.2		1.5		-3.6		1.1		OURLD		77.7	
17:47:[illegible]	0.3		22.1 RACK SPAN		15.[illegible]		[illegible]		-4.0	16.000	4.2		OPEN F		67.0F	
200	0.5		[illegible]		70.9		0.1		-4.0		4.2		OPEN		66.[illegible]	
300	[illegible]		7.6		71.5		1.5		-3.6		1.2		OURLD		77.2	
17:50:[illegible]	0.5		11.5 RACK MID		-0.7		[illegible]		-4.0	16.000	[illegible]		OPEN F		65.2F	
200	[illegible]		[illegible]		-0.[illegible]		[illegible]		-3.0		[illegible]		OPEN		65.[illegible]	
300	1.7		7.6		65.0		1.7		-3.7		1.5		OURLD		76.2	
17:51:[illegible]	-1.2		[illegible]		-0.[illegible]		12.0 RACK SPAN		-2.0	4.0000	4.1		OPEN F		69.0F	
200	0.1		10.[illegible]		-0.[illegible]				-3.0		[illegible]		OPEN		66.[illegible]	
300	1.7		7.6		[illegible]		1.7		-3.7		1.5		OURLD		76.[illegible]	

123 TRC ENVIRONMENTAL CONSULTANTS ALGONQUIN GAS TRANSMISSION COMPANY HANOVER NJ EMISSION COMPLIANCE PROGRAM

1114	01	02	03	04	05	06	07	08	09	10	11	12	13	14	15	16
100	CO		OXYGEN		NOX		CO2		CO		THC		STACK		MFLS	
200	PPM		PERCENT		PPM		PERCENT		PPM		PPM C3		TEMP		TEMP	
17:53:14	-0.5		0.0		-1.0		5.4 RACK MID		-4.0	16.000	4.2		OPEN	F	71.0F	
200	-0.3		6.0		-0.6		6.1		-3.0		4.0		OPEN		68.2	
300	1.4		7.1		61.7		1.6		-3.6		1.6		DURLD		75.8	
17:55:28	40.9 RACK SPAN		0.0		-1.3		0.3		-4.0	16.000	4.0		OPEN	F	73.5F	
200	38.9		0.0		-1.1		0.3		-3.0		3.8		OPEN		73.2	
300	1.2		6.5		58.4		1.7		-3.6		1.8		DURLD		75.5	
17:56:54	9.5 RACK MID		0.7		-1.3		0.2		-4.0	16.000	4.2		OPEN	F	72.5F	
200	77.4		1.4		-1.1		0.2		-3.6		3.9		OPEN		72.6	
300	2.0		6.0		55.1		1.6		-3.6		1.9		DURLD		75.2	
18:00:36	0.9		21.6		-1.0		0.2		-2.0	4.0000	0.1 ANALYZER ZERO		OPEN	F	71.0F	
200	1.1		21.6		-1.0		0.2		-3.3		0.6		OPEN		72.7	
300	1.7		5.7		48.5		1.5		-3.6		2.2		DURLD		74.8	
18:03:19	0.8		21.6		-1.0		0.2		-4.0	16.000	4.0 ANALYZER SPAN		OPEN	F	64.4F	
200	1.0		21.6		-1.0		0.2		-3.2		2.6		OPEN		67.4	
300	1.7		6.3		47.7		1.5		-3.5		2.2		DURLD		74.3	
18:04:59	0.7		21.6		-1.0		0.2		-4.0	16.000	5.2 ANALYZER MID		OPEN	F	63.5F	
200	1.0		21.6		-1.0		0.2		-3.2		4.1		OPEN		66.4	
300	1.8		7.0		47.6		1.5		-3.5		2.3		DURLD		73.8	

APPENDIX B

Calibration and Certification Data

METHOD 5 MODULE CALIBRATION

DATE 11/20/90 ORIFICE/MODULE NO. D-8 NAME R Potter

BAROMETRIC PRESSURE Pb 30.05 in Hg STANDARD METER P-697

MODULE ORIFICE SETTING ΔH (in. H_2O)	STANDARD METER Volume V_s (ft^3)	Factor Y_s	Temperature t_s (°F)	Pressure ΔPs (in. H_2O)	MODULE METER Volume Vm (ft^3)	Temperatures tmi (°F)	tmo (°F)	Time θ (min)	Y	ΔHa (in. H_2O)	Module Flowrate Q (SCFM)	OF
0.5	5.0	1.00	72	-0.3	5.044	78	78	1286	1.00	1.84		
1.0	5.0	1	72	-0.5	5.047	79	78	921	1.00	1.88		
1.5	10.0	1	72	-0.7	10.089	78	78	1419	1.00	1.80		
2.0	10.0	1	72	-0.8	10.089	79	78	1288	1.00	1.84		
3.0	10.0	1	72	-1.2	10.091	79	76	1034	1.00	1.85		
								AVERAGE:	1.00	1.84		

CHECK:

FOR CHECK, USE THE AVERAGE ΔHa FOR ΔH

$$Y = \frac{V_s \left(P_b + \frac{P_s}{13.6}\right)(T_m + 460)\, Y_s}{V_m \left(P_b + \frac{\Delta H}{13.6}\right)(t_s + 460)}$$

$$\Delta Ha = \left[\frac{(0.0317)\,\Delta H}{P_b\,(t_m + 460)}\right]\left[\frac{(t_s + 460)\,\theta}{V_s\, Y_s}\right]^2$$

$$Q = Y\,(17.64)\,V_m \left[\frac{P_b + \frac{\Delta H}{13.6}}{(t_m + 460)\,\theta}\right]$$

$$OF = \text{orifice factor} = \left[\frac{(t_m + 460)\,\Delta H}{P_b}\right]^{1/2}$$

Correlation Line Equation

Q = m (OF) + b

Q = _____ OF + _____

ACCEPTANCE CRITERIA:

Each Y must be 1.00 ± 0.01
Average ΔHa must be 1.84 ± 0.25
Each ΔHa must be within 0.15 of the average ΔHa

TC Readout Calibrated with Constant Voltage Source _____
tmi _____ °F tmo ✓ °F Reference Thermometer _____ °F
Module Leak Check ✓
Heater Box Love Control OK _____ Probe Heater Low Control ✓
Module Cleaned _____ Pitot tube manometer leak check ✓

Calibrated and Checked by Ray P Date 11/20/90
Reviewed by _____ Date _____

5/3/83

S-TYPE PITOT GEOMETRY CALIBRATION

PART 1 - PROBE CONFIGURATION

Date December 9, 1980
Page ____ of ____

TRC Probe Identification 302

Pitot Identification _____

Technical Specialist _____

Date 11-01-90

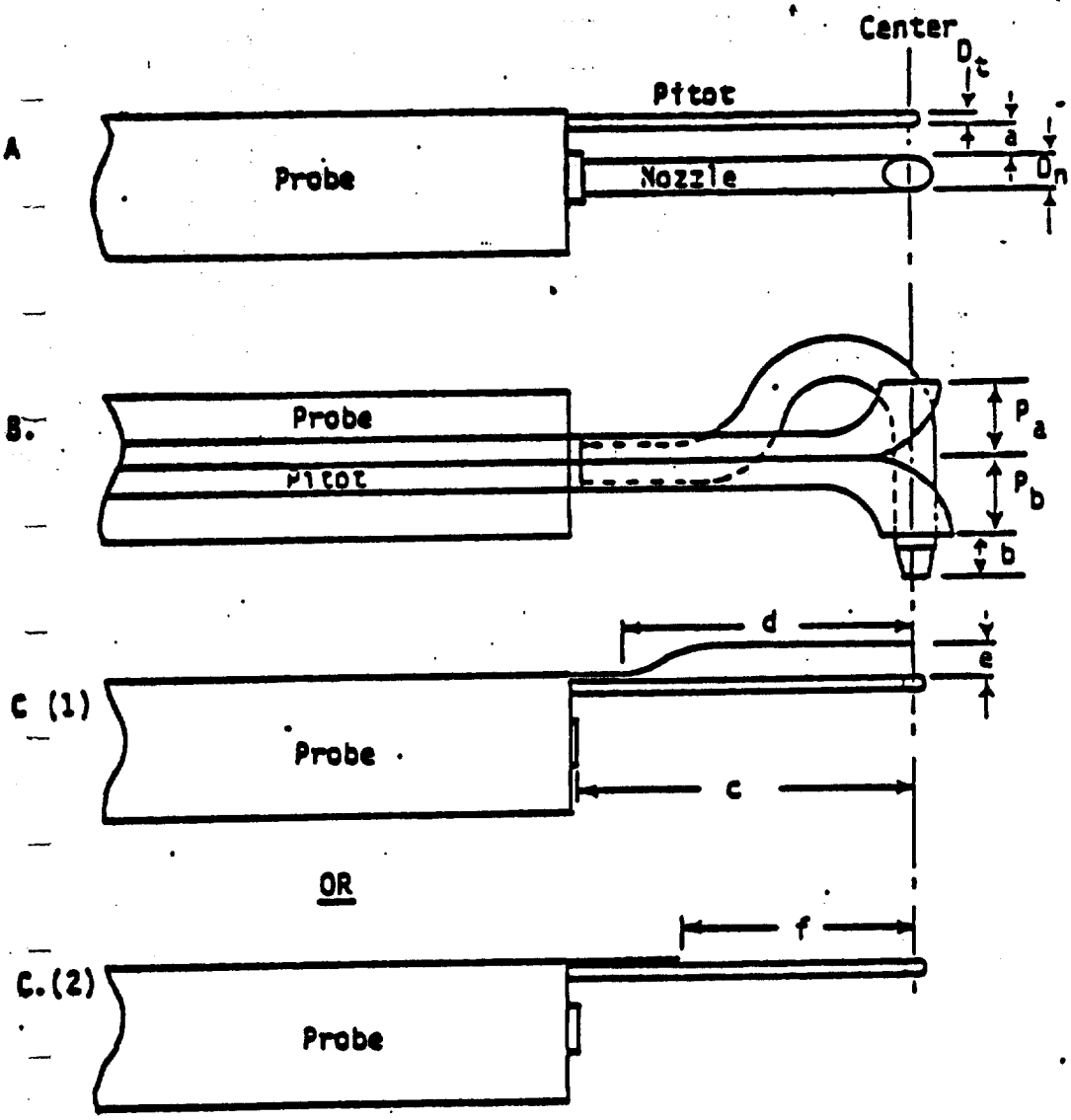

D_t .375

D_n .507

a .432

P_a .580

P_b .582

b 1.390

c 4.925

d 5.225

e .114

OR

c _____

f _____

Specifications (EPA Method 2)

D_t = 3/16" to 3/8"	c ≥ 3"	$P_a = P_b$
D_n = 1/2"	d ≥ 3"	
a ≥ 3/4"	e ≥ 3/4"	$1.05\ D_t \le P \le 1.50\ D_t$
b ≥ 0	f ≥ 2"	

If these specifications are met, proceed with Part 2 Pitot alignment.

FORM 911-1

Revision No. 1
Date December 9, 1980
Page ____ of ____

S-TYPE PITOT GEOMETRIC CALIBRATION
PART 2 - PITOT ALIGNMENT

TRC Probe Identification 302 Pitot Identification _____
Technical Specialist _____
Date 11-01-90

A.

Transverse Tube Axis

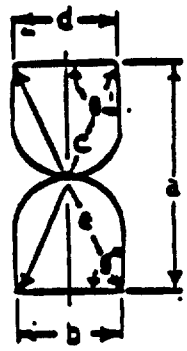

a 1.119
b .371
c 1.151
d .370
e 1.164

$$\frac{a^2 + b^2 - c^2}{2ab} = \cos\theta$$

$$\frac{a^2 + d^2 - e^2}{2ad} = \cos\theta'$$

θ 85.51 $(80^\circ < \theta < 100^\circ)$
θ' 87.63 $(80^\circ < \theta' < 100^\circ)$

B.

Longitudinal Tube Axis

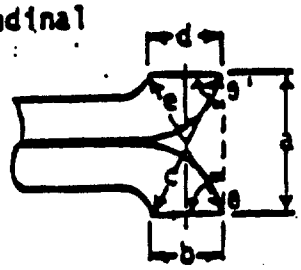

a 1.119
b .521
c 1.234
d .523
e 1.213

$$\frac{a^2 + b^2 - c^2}{2ab} = \cos\theta$$

$$\frac{a^2 + d^2 - e^2}{2ad} = \cos\theta'$$

θ 89.96 $(85^\circ < \theta < 95^\circ)$
θ' 87.34 $(85^\circ < \theta' < 95^\circ)$

C.

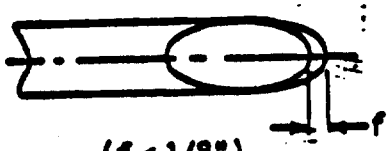

(f < 1/8")

f < 1/8

D.

(g < 1/32")

g < 1/32

NOTE: values in parentheses are EPA Method 2 specifications.

PROBE THERMOCOUPLE CALIBRATION

			Tolerances
Expected Stack Temperature (T_s)		°R	
Mercury Thermometer (T_{ref})	786	°R	($T_s \pm 10\%$)
Thermocouple Readout	780	°R	($T_{ref} \pm 1.5\%$)

Probe Identification 302
Technician AKB Date 11-6-90

FORM 811-2

PART 1 - PROBE CONFIGURATION

Date December 9, 1980
Page ____ of ____

RC Probe Identification 301

Pitot Identification _____

Technical Specialist _____

Date 10-01-90

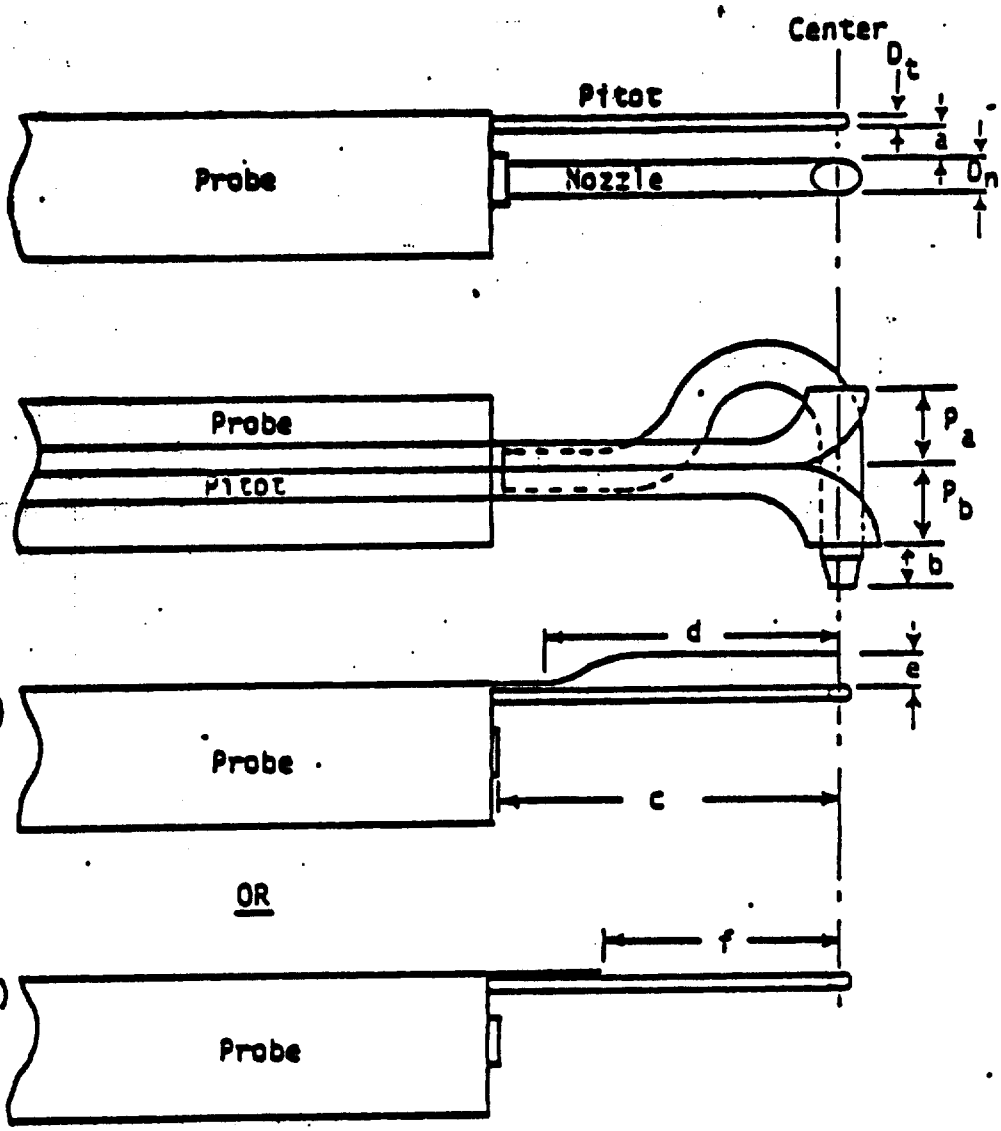

D_t .380
D_n .507
a .450

P_a .542
P_b .543
b 1.08

c 4.81
d 3.992
e .762

OR

c _____
f _____

Specifications (EPA Method 2)

D_t = 3/16" to 3/8"	c ≥ 3"	$P_a = P_b$
D_n = 1/2"	d ≥ 3"	
a ≥ 3/4"	e ≥ 3/4"	$1.05\ D_t \le P \le 1.50\ D_t$
b ≥ 0	f ≥ 2"	

If these specifications are met, proceed with Part 2 Pitot alignment.

FORM 911-1

Revision No. I
Date December 9, 1980
Page ____ of ____

S-TYPE PITOT GEOMETRIC CALIBRATION
PART 2 - PITOT ALIGNMENT

TRC Probe Identification 301 Pitot Identification _____

Technical Specialist _____

Date 110190

A.

Transverse Tube Axis

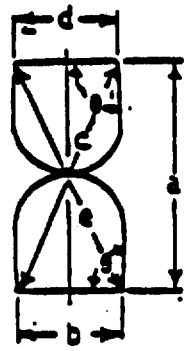

a 1.094
b .382
c 1.152
d .378
e 1.153

θ 88.93
θ' 89.28

$$\frac{a^2 + b^2 - c^2}{2ab} = \cos\theta$$

$$\frac{a^2 + d^2 - e^2}{2ad} = \cos\theta'$$

$(80^\circ < \theta < 100^\circ)$

$(80^\circ < \theta' < 100^\circ)$

B.

Longitudinal Tube Axis

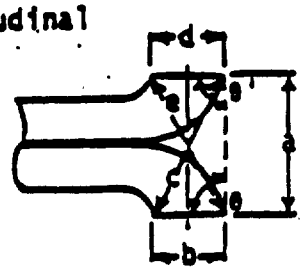

a 1.090
b ~~.381~~ .511
c ~~1.249~~ 1.237
d .535
e 1.197

θ 94.17
θ' 87.96

$$\frac{a^2 + b^2 - c^2}{2ab} = \cos\theta$$

$$\frac{a^2 + d^2 - e^2}{2ad} = \cos\theta'$$

$(85^\circ < \theta < 95^\circ)$

$(85^\circ < \theta' < 95^\circ)$

C.

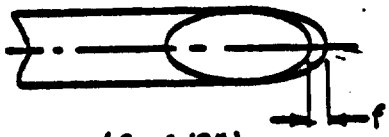

(f < 1/8")

f < 1/8

D.

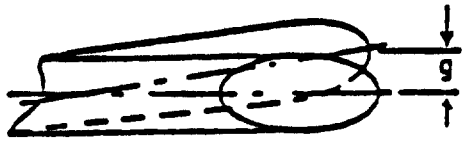

(g < 1/32")

g < 1/32

NOTE: values in parentheses are EPA Method 2 specifications.

PROBE THERMOCOUPLE CALIBRATION

			Tolerances
Expected Stack Temperature (T_s)		°R	
Mercury Thermometer (T_{ref})	660	°R	($T_s \pm 10\%$)
Thermocouple Readout	662	°R	($T_{ref} \pm 1.5\%$)
Probe Identification	301		

Technician ASB Date 11-6-90

F RM 811-2

F209

2L-1196

FORM
WATW

Scott Specialty Gases
Electronics Group

CERTIFICATION

ALL VALUES MOLE PERCENT UNLESS NOTED

GAS	REQUESTED	ACTUAL
CARBON MONOXIDE	9. PPM	10.1 PPM
NITROGEN	BALANCE	
REFERENCE STANDARD	CKM 1677	9.90 PPM AL 9208
ASSAY WAS PERFORMED TO EPA PROTOCOL 1		ACC. SEC G1
ANALYSIS DATE		6/20/89

THC AS METHANE _____ PPM

DEWPOINT _____ °F

PRESSURE 2000 PSIG

ANALYST MAS

EXPIRATION 12/20/90

F 2.9

2L - 1125

Scott Specialty Gases

Electronics Group

CERTIFICATION

ALL VALUES MOLE PERCENT UNLESS NOTED

GAS	REQUESTED	ACTUAL
CARBON MONOXIDE	40. PPM	41.6 PPM
NITROGEN	BALANCE	
REFERENCE STANDARD	CRM 678A	47.2 PPM CAL 6906

ASSAY WAS PERFORMED ACC. TO EPA PROTOCOL 1 SEC G1

ANALYSIS DATE 6/21/89

THC AS METHANE, _____ PPM

DEWPOINT _____ °F

PRESSURE 2000 PSIG

ANALYST NAS

EXPIRATION 12/21/90

Part 2

TRC Environmental Consultants, Inc.

EPA Method

-4
16
5C

FIELD DATA SHEET

Firm Name: Allonge
Plant Location: NJ
Test Number: T-3
Sampling Location: Bank 2
TRC Project No.: 7638
Date: 11/14/90
Tester: ATB

Orifice No.: D8
Ambient Temp.: ~~30.145~~ °F
Bar. Press.: 30.14 "Hg
Probe Ident. No.: 202
Filter Ident. No.: —
Duct Area: 20" x 20" ft²

Nozzle No. & Dia.: — in.
Assumed Moisture: 3 %
Test Duration: 64 min.
Traverse Point Interval: 4 min.
Probe Heater Setting: 250 °F
Filter Temp. Setting: — °F
Dry Gas Meter Y: 1.01

Nomograph C Factor: —
Pitot Coefficient: 0.84
Orifice ΔH_A: 1.80
Test Start Time: 1222
Test Final Time: 1350
Leak Test Start: 0.002 CFM @ 15 "Hg
Leak Test Final: 0.002 CFM @ 5 "Hg

Port	Point	Time Min. (3-5)	Velocity ΔP in H_2O (6-10)	ΔH in H_2O (12-15)	T_M in °F (18-20)	T_M out °F (23-25)	P_{Stack} in H_2O (26-30)	T_{Stack} °F (32-35)	Gas Sample Volume cu. ft. (40-45)	PROBE (50)	Cyc. Angle ø (52-53)	Heater Box Temp.	Temp. of Gas Leaving Condenser °F	Pump Vac. in Hg	Probe Temp. °F	O_2 %	Orsat Flow-rate (lpm) (SCFH)	F.O. Temp °F
	3	56	220	186	53	52	-160	805	527→44				50	3.0	346			
	4	60	210	186	53	52		806	530→57				51	3.0	343			
		64							53367									
Average			$\Sigma\sqrt{\Delta P}$ 159	186		51	-160	802										

49.94

H_2O Collected: ml
SG Condition:
SG Weight: gm
Total Volume Collected: ml

Orsat Bag Sample Triplicate Analysis, %

CO_2	O_2	CO	N_2

COMMENTS:

11/13/90

Algonquin Gas Co.

TURBINE # 1

TESTS 1-2

123 TRC ENVIRONMENTAL CONSULTANTS ALGONQUIN GAS TRANSMISSION COMPANY HANOVER NJ EMISSION COMPLIANCE PROGRAM

0005	01	02	03	04	05	06	07	08	09	10	11	12	13	14	15	16
100	CO		OXYGEN		NOX		CO2		CO		THC		STACK		MELS	
200	PPM		PERCENT		PPM		PERCENT		PPM		PPM C3		TEMP		TEMP	
08:59:47	0.2	ZERO ANALYZER	21.2		0.0	ZERO ANALYZER	0.2		-4.0	16.000	0.7		OPEN F		81.8F	
200	0.3		21.2		0.0		0.1		-3.7		0.3		OPEN		81.4	
300	-0.7		21.1		-1.3		0.1		-4.0		3.1		OURLD		81.0	
09:07:18	0.1	ZERO RACK	0.2	ZERO RACK	0.0	ZERO RACK	0.1	ZERO RACK	-4.0	16.000	0.7		OPEN F		82.3F	
200	-0.1		6.0		0.2		0.1		-3.0		0.8		OPEN		81.8	
300	-0.5		20.5		-1.1		0.1		-4.0		2.5		OURLD		81.1	
09:21:46	0.0		0.0		143.5	MID SPAN 143.0 PPM	0.1		-4.0	16.000	1.1		OPEN F		81.8F	
200	0.0		0.0		141.3		0.1		-2.6		1.2		OPEN		80.9	
300	-0.3		15.5		21.6		0.1		-3.6		1.4		OURLD		80.9	
08:31:15	2.7		0.0		144.5		0.1		-2.0	4.0000	1.2		OPEN F		80.5F	
200	0.0		0.0		142.2		0.1		-3.1		1.2		OPEN		81.7	
300	0.0		12.1		50.3		0.1		-3.4		0.7		OURLD		80.7	
08:47:30	0.1		0.0		147.5	MID SPAN	0.1		-2.0	4.0000	1.2		OPEN F		79.1F	
200	0.0		0.0		147.7		0.1		-2.6		1.0		OPEN		78.5	
300	0.1		6.4		101.7		0.1		-3.2		0.5		OURLD		80.9	
09:02:48	0.2		0.0		72.2	LOW SPAN 71.2	0.1		-2.0	4.0000	1.0		OPEN F		81.3F	
200	0.1		0.0		72.4		0.1		-3.5		0.0		OPEN		81.4	
300	0.0		3.0		139.7		0.1		-2.8		0.7		OURLD		80.9	
09:08:29	0.0		11.3	11% MID RACK	0.2		0.1		-4.0	16.000	1.9		OPEN F		81.1F	
200	0.0		11.3		0.9		0.1		-3.5		1.2		OPEN		81.3	
300	0.0		2.6		144.6		0.1		-2.8		0.7		OURLD		80.8	
09:10:39	0.7		22.4	22% UPPER SPAN	0.0		0.1		-4.0	16.000	1.7		OPEN F		82.4F	
200	0.0		14.8		0.4		0.1		-3.3		1.2		OPEN		81.8	
300	0.0		3.3		144.6		0.1		-2.8		0.7		OURLD		80.8	
09:14:21	-0.6		0.0		0.0		5.4	CO2 MID 5%	-4.0	16.000	2.2		OPEN F		82.9F	
200	-0.4		2.6		0.0		5.7		-3.5		1.7		OPEN		82.8	
300	0.0		4.1		136.2		0.2		-2.8		0.7		OURLD		80.9	
09:16:42	-1.3		0.2		0.2		12.7	CO2 UPPER 12%	-2.0	16.000	2.6		OPEN F		82.4F	
200	-0.7		1.6		0.1		1.4		-3.3		1.9		OPEN		82.7	
300	0.0		4.2		131.6		0.6		-2.8		0.8		OURLD		81.0	

123 TRC ENVIRONMENTAL CONSULTANTS ALGONQUIN GAS TRANSMISSION COMPANY HANOVER NT EMISSION COMPLIANCE PROGRAM

123	01	02	03	04	05	06	07	08	09	10	11	12	13	14	15	16
100	CO		OXYGEN		NOX		CO2		CO		THC		STACK		MELS	
200	PPM		PERCENT		PPM		PERCENT		PPM		PPM C3		TEMP		TEMP	
09:31:43	41.5	UPPER SPAD 41.6	0.0		0.2		0.1		-4.0	16.000	1.7		OPEN F		80.8F	
200	31.2		0.0		0.1		0.1		-2.2		1.1		OPEN		82.1	
300	2.9		4.1		94.0		1.1		-2.9		1.1		OVRLD		81.0	
09:36:45	7.4	MID SPAD 10.1	0.0		0.2		0.1		-2.0	4.0000	5.5		OPEN F		83.5F	
200	14.8		0.5		0.1		0.1		-2.6		3.1		OPEN		82.5	
300	4.7		4.1		72.8		1.1		-2.8		1.2		OVRLD		81.2	
09:47:45	-0.3		0.0		146.0	MID 143	0.1		-2.0	4.0000	3.8		OPEN F		78.6F	
200	0.0		0.0		145.8		0.1		-3.5		4.3		OPEN		78.9	
300	4.8		4.1		48.9		1.1		-2.8		1.7		OVRLD		81.1	
09:50:23	-0.4		0.0		216.7		0.1		-2.0	4.0000	2.9		OPEN F		78.3F	
200	-0.1		0.0		170.8	226 HIGH	0.1		-3.0		3.2		OPEN		78.2	
300	4.8		4.1		47.5		1.1		-2.8		1.8		OVRLD		81.0	
09:50:48	-0.4		0.0		217.7		0.1		-2.0	4.0000	2.7		OPEN F		78.9F	
200	-0.1		0.0		173.0		0.1		-3.0		3.2		OPEN		78.3	
300	4.8		4.1		47.5		1.1		-2.8		1.8		OVRLD		81.0	
09:53:45	8.2		0.0		3.0		0.1		-4.0	16.000	3.5		OPEN F		79.1F	
200	7.5		0.0		94.7		0.1		-3.2		1.8		OPEN		79.6	
300	4.8		4.1		47.6		1.1		-2.8		1.8		OVRLD		81.0	
09:55:21	41.5		0.0		0.2		0.1		-4.0	16.000	2.8		OPEN F		78.7F	
200	13.5		0.0		48.0		0.1		-3.3		2.4		OPEN		79.4	
300	5.1		3.7		40.6		1.0		-2.9		1.9		OVRLD		81.0	
09:58:15	0.1		0.2		71.7	OW 71.2	0.1		-2.0	4.0000	1.4		OPEN F		78.5F	
200	0.1		0.4		64.6		0.1		-2.8		0.0		OPEN		79.2	
300	6.5		2.3		36.1		1.0		-2.8		1.9		OVRLD		80.9	
10:05:14	0.2		0.0		72.5		0.1		-4.0	4.0000	0.1	ZERO ANALYZER	OPEN F		80.0F	
200	0.0		0.0		73.2		0.1		-3.2		0.9		OPEN		80.0	
300	6.5		2.1		37.6		1.0		-2.9		1.8		OVRLD		80.7	
10:08:32	0.7		0.0		73.8		0.1		-2.0	4.0000	9.6	9.6 PPM	OPEN F		78.2F	
200	-0.2		0.0		73.7		0.1		-3.5		[illegible]		OPEN		78.1	
300	6.5		1.7		40.0		1.0		-2.9		2.1		OVRLD		80.4	

123 TRC ENVIRONMENTAL CONSULTANTS ALGONQUIN GAS TRANSMISSION COMPANY HANOVER NJ ...SSIO... PLI PRI N

1113	01	02	03	04	05	06	07	08	09	10	11	12	13	14	15	16
100	CO		OXYGEN		NOX		CO2		CO		THC		STACK		MELS	
200	PPM		PERCENT		PPM		PERCENT		PPM		PPM C3		TEMP		TEMP	
10:10:58	0.0		0.0		72.7		0.1		-2.0	4.0000	4.8 5.2 PPM		OPEN F		78.1F	
200	0.0		0.0		73.4		0.1		-2.6		15.8		OPEN		78.5	
300	6.5		0.9		42.5		1.0		-2.9		2.2		OURLD		80.3	
10:48:23	-0.8		0.0		134.7		0.1		-4.0	16.000	-0.1		36.9F		75.1F	
200	-0.7		0.0		133.7		0.1		-3.7		-0.1		37.0		79.8	
300	1.1		4.0		90.6		0.1		-3.1		0.7		35.5		80.7	
10:49:01	-0.5		0.0		136.3		0.1		-4.0	16.000	-0.2		37.0F		76.5F	
200	-0.7		0.0		134.3		0.1		-3.8		-0.1		37.0		78.4	
300	1.1		4.0		90.6		0.1		-3.1		0.7		35.5		80.7	
10:49:33	-0.9		0.0		137.2 SYSTEM 143		0.1		-4.0	16.000	-0.2		36.9F		78.7F	
200	-0.7		0.0		134.9		0.1		-3.8		-0.1		36.9		78.3	
300	1.1		4.0		90.6		0.1		-3.1		0.7		35.5		80.7	
10:52:03	-1.3		0.0		35.7		12.6 SYSTEM 12.0		-4.0	16.000	-0.3		37.0F		73.8F	
200	-1.3		0.0		40.2		12.6		-4.0		-0.4		37.1		73.7	
300	0.9		4.0		82.3		0.5		-3.2		0.6		35.7		80.6	
10:56:22	36.9 SYSTEM SPAN		1.5		0.5 200		0.3		-4.0	16.000	-1.5		OPEN F		80.3F	
200	19.1		0.4		2.2		5.3		-3.9		-0.4		36.7		78.5	
300	1.1		4.0		82.2		0.6		-3.2		0.4		35.8		80.7	
11:00:09	7.1 MID		2.0		0.0		0.1		-4.0	16.000	-0.2		OPEN F		79.9F	
200	15.0		2.1		0.2		0.1		-4.0		-0.3		OPEN		80.1	
300	1.8		4.2		77.4		0.6		-3.3		0.3		35.8		80.8	
11:14:00	13.9		17.6		61.5		IN STACK 2.2		-4.0	16.000	2.2		OPEN F		77.1F	
200	13.9		17.5		60.5		2.2		-4.0		2.7		OPEN		78.0	
300	2.7		8.0		66.8		0.8		-3.5		0.3		35.8		80.5	
11:16:00	13.0		17.5		62.5		2.2		-4.0	16.000	1.7		OPEN F		76.6F	
200	13.3		17.5		61.8		2.2		-4.0		1.9		OPEN		76.7	
300	3.2		7.9		68.8		0.8		-3.6		0.4		35.8		80.4	
11:18:00	12.1		17.4		65.5		2.3		-4.0	16.000	1.1		OPEN F		74.3F	
200	12.8		17.5		62.8		2.2		-3.8		1.6		OPEN		76.1	
300	3.6		8.4		67.1		0.9		-3.6		0.4		35.8		80.1	

123 TRC ENVIRONMENTAL CONSULTANTS ALGONQUIN GAS TRANSMISSION COMPANY HANOVER NJ [illegible] PM

1113	01	02	03	04	05	06	07	08	09	10	11	12	13	14	15	16
100	CD		OXYGEN		NOX		CO2		CD		THC		STACK		MELS	
200	PPM		PERCENT		PPM		PERCENT		PPM		PPM C3		TEMP		TEMP	
11:20:00	10.7		17.1		74.2		2.5		-4.0	16.000	0.6		OPEN F		77.3F	
200	10.7		17.1		73.0		2.4		-3.3		0.6		OPEN		76.7	
300	3.9		9.0		65.3		1.0		-3.7		0.5		35.8		80.0	
11:22:00	8.3		16.9		80.0		2.6		-4.0	16.000	0.3		OPEN F		77.6F	
200	9.7		17.0		76.5		2.5		-3.6		0.5		OPEN		77.4	
300	4.3		9.5		64.5		1.1		-3.8		0.5		35.8		79.8	
11:24:00	7.8		16.9		79.7		2.6		-4.0	16.000	0.2		OPEN F		78.1F	
200	9.0		16.9		78.0		2.5		-3.7		0.3		OPEN		77.5	
300	4.6		10.1		62.9		1.2		-3.8		0.5		35.8		79.6	
11:26:00	7.5		17.0		78.2		2.6		-2.0	4.0000	0.2		OPEN F		78.7F	
200	7.6		16.9		78.7		2.6		-3.8		0.1		OPEN		78.3	
300	4.8		10.7		61.1		1.3		-3.8		0.5		35.7		79.5	
11:28:00	7.3		17.0		78.5		2.6		-4.0	16.000	0.2		OPEN F		79.1F	
200	7.5		16.9		78.4		2.6		-3.8		0.1		OPEN		78.7	
300	5.1		11.2		59.4		1.3		-3.8		0.5		35.7		79.4	
TEST 1			11/13/90		11:30 START											
11:30:00	7.2		17.0		77.0		2.6		-4.0	16.000	0.1		OPEN F		78.5F	
200	7.2		17.0		77.1		2.6		-4.0		0.0		OPEN		79.2	
300	5.4		11.8		57.6		1.4		-3.8		0.5		35.6		79.3	
11:32:00	7.4		17.0		76.3		2.5		-4.0	16.000	0.1		OPEN F		79.7F	
200	7.2		17.0		76.6		2.5		-4.0		0.0		OPEN		78.8	
300	5.7		12.4		56.0		1.5		-3.8		0.5		35.5		79.1	
11:34:00	7.1		17.0		79.2		2.5		-4.0	16.000	0.2		OPEN F		79.0F	
200	7.1		17.0		77.0		2.5		-3.7		0.0		OPEN		78.4	
300	5.9		12.5		55.2		1.6		-3.8		0.5		36.5		79.0	
11:36:00	7.0		17.0		77.7		2.5		-4.0	16.000	0.1		OPEN F		80.0F	
200	7.1		17.0		78.2		2.5		-3.6		0.0		OPEN		79.3	
300	6.2		12.4		57.4		1.6		-3.8		0.5		36.5		78.9	
11:38:00	7.4		17.0		76.7		2.5		-4.0	16.000	0.1		OPEN F		78.8F	
200	7.0		17.0		77.8		2.5		-3.8		0.0		OPEN		79.5	
300	6.5		12.3		59.9		1.7		-3.8		0.5		36.6		78.8	

123 TRC ENVIRONMENTAL CONSULTANTS ALGONQUIN GAS TRANSMISSION COMPANY HANOVER NJ EMISSION COMPLIA PRM

1113	01	02	03	04	05	06	07	08	09	10	11	12	13	14	15	16
100	CO		OXYGEN		NOX		CO2		CO		THC		STACK		MELS	
200	PPM		PERCENT		PPM		PERCENT		PPM		PPM C3		TEMP		TEMP	
11:40:00	6.9		17.0		78.0		2.5		-4.0	16.000	0.1		OPEN F		80.5F	
200	7.0		17.0		77.7		2.5		-3.3		0.1		OPEN		79.6	
300	6.8		12.8		59.0		1.8		-3.8		0.5		36.7		78.7	
11:42:00	7.0		17.0		78.5		2.5		-4.0	16.000	0.2		OPEN F		80.7F	
200	7.0		17.0		78.1		2.5		-3.6		0.1		OPEN		80.2	
300	7.0		12.7		58.1		1.9		-3.8		0.5		36.8		78.6	
11:44:00	7.3		17.0		76.5		2.5		-4.0	16.000	0.1		OPEN F		81.6F	
200	7.0		17.0		77.9		2.5		-3.8		0.1		OPEN		80.8	
300	7.3		13.2		57.0		2.0		-3.8		0.5		36.9		78.6	
11:46:00	7.1		17.0		76.0		2.5		-4.0	4.0000	0.1		OPEN F		81.2F	
200	7.2		17.0		76.2		2.5		-3.8		0.1		OPEN		81.1	
300	7.6		13.8		55.1		2.0		-3.8		0.5		36.9		78.5	
11:48:00	7.1		17.0		77.0		2.5		-4.0	16.000	0.1		OPEN F		80.7F	
200	7.0		17.0		76.4		2.5		-3.7		0.1		OPEN		81.0	
300	7.8		14.3		53.2		2.1		-3.8		0.5		36.9		78.6	
11:50:00	7.1		17.0		77.7		2.5		-4.0	16.000	0.2		OPEN F		81.2F	
200	7.0		17.0		77.4		2.5		-3.3		0.2		OPEN		80.8	
300	8.1		14.9		51.2		2.2		-3.8		0.5		36.9		78.6	
11:52:00	6.9		17.0		79.5		2.5		-4.0	16.000	0.2		OPEN F		79.8F	
200	6.9		17.0		78.1		2.5		-3.2		0.2		OPEN		80.7	
300	8.4		15.5		52.4		1.9		-3.8		0.5		36.7		78.8	
11:54:00	7.2		17.0		78.8		2.5		-4.0	16.000	0.2		OPEN F		82.7F	
200	6.9		17.0		78.4		2.5		-3.1		0.2		OPEN		81.1	
300	8.1		16.0		55.0		1.8		-3.8		0.6		OURLD		78.9	
11:56:00	8.2		17.0		79.0		2.5		-4.0	16.000	0.4		OPEN F		80.9F	
200	7.3		17.0		78.7		2.5		-3.6		0.4		OPEN		81.6	
300	7.1		16.6		57.6		1.9		-3.8		0.6		OURLD		79.0	
11:58:00	7.5		17.0		79.5		2.5		-2.0	4.0000	0.4		OPEN F		80.0F	
200	7.3		17.0		79.1		2.5		-3.5		0.3		OPEN		80.8	
300	6.9		17.0		60.2		2.0		-3.8		0.6		OURLD		78.9	

.23 TRC IRON TAL ULT NQUI IS T MISL CON / HA R NL ISSI MPI E P AN

1113	01	02	03	04	05	06	07	08	09	10	11	12	13	14	15	16
100	CO		OXYGEN		NOX		CO2		CO		THC		STACK		MELS	
200	PPM		PERCENT		PPM		PERCENT		PPM		PPM C3		TEMP		TEMP	
12:00:00	7.1		17.0		80.2		2.5		-4.0	16.000	0.3		OPEN F		81.0F	
200	7.1		17.0		79.6		2.5		-3.3		0.3		OPEN		80.9	
300	6.9		17.5		62.9		2.1		-3.8		0.6		OURLD		79.0	
12:02:00	7.3		17.0		80.2		2.5		-4.0	16.000	0.5		OPEN F		80.8F	
200	7.2		17.0		80.1		2.5		-3.5		0.3		OPEN		80.8	
300	7.1		17.6		65.6		2.1		-3.8		0.6		OURLD		79.1	
12:04:00	7.3		17.0		81.3		2.5		-4.0	16.000	0.5		OPEN F		80.2F	
200	7.3		17.0		80.3		2.5		-3.7		0.2		OPEN		80.6	
300	7.4		17.4		68.3		2.2		-3.8		0.6		OURLD		79.1	
12:06:00	7.3		17.0		81.0		2.5		-4.0	16.000	0.1		OPEN F		81.7F	
200	7.2		17.0		81.2		2.5		-3.8		0.2		OPEN		81.0	
300	7.7		17.3		71.0		2.3		-3.8		0.6		OURLD		79.2	
12:08:00	6.4		17.2		80.7		1.9		-4.0	16.000	2.0		OPEN F		81.5F	
200	7.1		17.0		80.8		2.4		-3.8		0.7		OPEN		81.4	
300	7.9		17.2		73.6		2.3		-3.8		0.6		OURLD		79.5	
12:10:00	3.2		19.5		11.7		1.8		-4.0	16.000	0.5		OPEN F		81.7F	
200	0.1		20.5		24.1		0.9		-4.0		0.8		OPEN		81.4	
300	8.0		17.1		74.0		2.4		-3.8		0.5		OURLD		79.6	
12:12:00	6.3		17.4		73.2		2.3		-4.0	16.000	0.1		OPEN F		80.3F	
200	3.9		18.6		43.0		1.7		-4.0		0.6		OPEN		80.9	
300	7.7		17.1		74.5		2.4		-3.8		0.4		OURLD		79.6	
12:14:00	6.2		17.3		74.0		2.3		-4.0	16.000	0.5		OPEN F		81.6F	
200	4.8		18.1		55.8		1.9		-3.9		0.5		OPEN		80.8	
300	7.5		17.1		74.9		2.4		-3.8		0.3		OURLD		79.8	
12:16:00	6.8		17.3		74.5		2.3		-4.0	16.000	0.5		OPEN F		78.3F	
200	6.3		17.3		74.1		2.3		-3.8		0.5		OPEN		79.5	
300	7.3		17.1		75.3		2.4		-3.8		0.3		OURLD		79.8	
12:18:00	6.4		17.4		73.8		2.3		-4.0	16.000	0.7		OPEN F		79.5F	
200	6.4		17.3		74.2		2.3		-3.9		0.5		OPEN		79.4	
300	7.1		17.1		75.6		2.4		-3.8		0.3		OURLD		80.0	

OUT OF STACK

123 TRC ENVIRONMENTAL CONSULTANTS PLEONQUIN GAS TRANSMISSION COMPANY HANOVER NT EMISSION CMPLIANCE PROGRAM

1115	01	02	03	04	05	06	07	08	09	10	11	12	13	14	15	16
100	CO		OXYGEN		NOX		CO2		CO		THC		STACK		MELS	
200	PPM		PERCENT		PPM		PERCENT		PPM		PPM C3		TEMP		TEMP	
12:20:00	6.5		17.3		74.5		2.4		-4.0	16.000	0.4		OPEN F		78.3F	
200	6.4		17.3		74.3		2.3		-4.0		0.4		OPEN		79.0	
300	6.9		17.1		75.6		2.4		-3.8		0.3		OURLD		80.0	
12:22:00	6.9		17.2		76.0		2.4		-4.0	16.000	0.3		OPEN F		76.9F	
200	6.6		17.2		75.5		2.3		-4.0		0.3		OPEN		77.9	
300	6.9		17.1		75.5		2.4		-3.8		0.3		OURLD		80.0	
12:24:00	6.8		17.2		75.5		2.4		-4.0	16.000	0.2		OPEN F		75.7F	
200	6.6		17.2		75.7		2.3		-3.9		0.3		OPEN		76.9	
300	6.9		17.1		75.3		2.4		-3.8		0.3		OURLD		79.9	
12:26:00	6.7		17.2		76.5		2.4		-2.0	4.0000	0.3		OPEN F		78.5F	
200	6.8		17.2		76.5		2.4		-3.8		0.2		OPEN		78.4	
300	6.8		17.1		75.3		2.4		-3.8		0.3		OURLD		79.9	
12:28:00	5.9		17.6		74.7		2.1		-4.0	16.000	0.5		OPEN F		78.8F	
200	6.7		17.2		76.0		2.3		-3.9		0.3		OPEN		78.7	
300	6.8		17.1		75.1		2.4		-3.8		0.3		OURLD		79.9	
12:30:00	6.2		17.6		71.0		2.1		-4.0	16.000	0.4		OPEN F		79.5F	
200	6.4		17.5		72.1		2.1		-4.0		0.2		OPEN		79.3	
300	6.8		17.2		74.9		2.3		-3.8		0.3		OURLD		80.0	
			CHANGE PARTS													
12:32:00	6.1		17.7		65.7		2.0		-4.0	16.000	0.3		OPEN F		79.6F	
200	6.2		17.6		69.4		2.0		-4.0		0.3		OPEN		79.6	
300	6.7		17.2		74.6		2.3		-3.8		0.3		OURLD		80.0	
12:34:00	5.6		17.8		64.7		2.0		-4.0	16.000	0.5		OPEN F		77.7F	
200	6.0		17.6		67.9		2.0		-4.0		0.3		OPEN		79.2	
300	6.7		17.2		74.1		2.3		-3.8		0.3		OURLD		79.9	
12:36:00	6.0		17.8		65.2		2.0		-4.0	16.000	0.2		OPEN F		79.1F	
200	5.7		17.8		65.0		2.0		-4.0		0.2		OPEN		78.0	
300	6.6		17.2		73.7		2.3		-3.8		0.3		OURLD		79.9	
12:38:00	5.7		17.7		65.0		2.0		-4.0	16.000	0.5		OPEN F		80.7F	
200	5.7		17.7		65.1		2.0		-4.0		0.2		OPEN		78.9	
300	6.6		17.3		73.3		2.3		-3.8		0.3		OURLD		80.0	

1123 T NUI ENTR INSU TSS ONG GAS NSM ON COMPANY ANOVER AS EMISSION CHECKANCE PROGRAM

1113	01	02	03	04	05	06	07	08	09	10	11	12	13	14	15	16
100	CO		OXYGEN		NOX		CO2		CO		THC		STACK		MELS	
200	PPM		PERCENT		PPM		PERCENT		PPM		PPM C3		TEMP		TEMP	
14:08:00	118.9		17.2		80.2		2.3		-6.0	36.000	OURLD		OPEN F		82.1F	
200	77.2		17.2		80.2		2.3		-4.1		63.1		OPEN		80.9	
300	9.7		18.1		19.0		0.7		-4.0		4.8		OURLD		78.8	
14:10:00	119.7		17.1		78.0		2.4		-6.0	36.000	OURLD		OPEN F		81.2F	
200	119.3		17.1		78.8		2.3		-6.0		OURLD		OPEN		81.3	
300	13.7		18.6		21.6		0.7		-4.1		4.9		OURLD		78.8	
14:12:00	119.3		17.1		77.7		2.4		-4.0	16.000	11.4		OPEN F		82.1F	
200	119.5		17.1		78.2		2.3		-5.0		16.7		OPEN		81.4	
300	17.8		19.2		24.2		0.8		-4.1		5.4		OURLD		79.0	
14:13:18	118.7		17.1		74.7		2.4		-4.0	16.000	8.3		OPEN F		81.9F	
200	119.3		17.1		77.7		2.3		-4.7		14.7		OPEN		81.6	
300	17.8		19.2		24.2		0.8		-4.1		5.4		OURLD		79.0	
14:14:00	117.8		17.1		75.0		2.3		-4.0	16.000	66.9		OPEN F		81.5F	
200	119.2		17.1		77.2		2.3		-4.6		19.7		OPEN		81.6	
300	20.4		19.8		26.7		0.9		-4.1		7.7		OURLD		79.1	
14:16:00	62.9		17.2		74.7		2.3		-4.0	16.000	42.5		OPEN F		81.2F	
200	86.0		17.2		74.2		2.3		-4.0		53.0		OPEN		80.8	
300	22.6		19.6		29.2		1.0		-4.1		9.2		OURLD		79.3	
14:18:00	36.7		17.3		73.8		2.2		-4.0	16.000	29.1		OPEN F		81.2F	
200	66.6		17.2		73.8		2.2		-4.0		44.1		OPEN		80.6	
300	23.8		19.5		31.6		1.0		-4.1		10.2		OURLD		79.5	
14:20:00	24.6		17.4		74.5		2.2		-4.0	16.000	22.8		OPEN F		78.3F	
200	26.2		17.3		74.6		2.2		-4.3		23.8		OPEN		78.1	
300	24.7		19.4		34.1		1.1		-4.1		11.0		OURLD		79.5	
14:22:00	15.7		17.8		71.0		2.2		-4.0	16.000	15.9		OPEN F		79.6F	
200	21.4		17.4		74.1		2.1		-4.1		20.5		OPEN		79.0	
300	25.3		19.3		36.5		1.2		-4.1		11.5		OURLD		79.6	
14:24:00	12.7		17.2		78.5		2.4		-4.0	16.000	11.6		OPEN F		80.3F	
200	18.6		17.3		73.7		2.2		-4.0		17.8		OPEN		79.2	
300	25.7		19.1		39.1		1.2		-4.1		11.9		OURLD		79.7	

Cometer Off scale

DATA OMITTED BETWEEN ARROWS.
Heat tape on particulate filter was burning and gasses were passing through casing into sample line.

OUT OF STACK

Range 3

Range 2

Off scale range 2

123	TR	VIRC	ITAL	SUL	S	DNQL	GAS	SMI	N CI	NV H	ER	MIS	CME	ICE	RAN		
1113	01	02	03	04	05	06	07	08	09	10	11	12	13	14	15		
100	CO		OXYGEN		NOX		CO2		CO		THC		STACK		MELS		
200	PPM		PERCENT		PPM		PERCENT		PPM		PPM C3		TEMP		TEMP		
14:26:00	10.1		17.2		79.2		2.4		-4.0	16.000	8.0		OPEN F		76.2F		
200	11.2		17.2		78.7		2.4		-3.8		9.6		OPEN		77.1		
300	26.1		19.0		41.7		1.3		-4.1		12.2		OURLD		79.7		
14:28:00	8.5		17.2		81.0		2.3		-4.0	16.000	6.0		OPEN F		75.6F		
200	10.2		17.2		79.4		2.3		-3.6		8.2		OPEN		76.9		
300	26.4		18.9		44.4		1.4		-4.1		12.4		OURLD		79.6		
14:30:00	8.0		17.3		80.2		2.3		-4.0	16.000	4.6		OPEN F		75.9F		
200	7.8		17.3		80.6		2.3		-3.3		4.9		OPEN		75.0		
300	26.7		18.7		47.1		1.5		-4.1		12.5		OURLD		79.5		
14:32:00	6.9		17.4		80.2		2.2		-4.0	16.000	3.7		OPEN F		75.5F		
200	7.3		17.3		80.4		2.2		-3.7		4.3		OPEN		75.5		
300	27.0		18.6		49.7		1.5		-4.1		12.6		OURLD		79.4		
14:34:00	5.6		17.4		77.0		2.2		-4.0	16.000	3.1		OPEN F		73.8F		
200	7.0		17.3		79.6		2.2		-3.8		3.9		OPEN		75.0		
300	27.2		18.5		52.3		1.6		-4.1		12.4		OURLD		79.3		
14:36:00	6.7		17.5		74.7		2.1		-2.0	4.0000	2.7		OPEN F		74.6F		
200	6.7		17.4		76.1		2.1		-3.3		2.8		OPEN		74.9		
300	27.5		18.3		54.8		1.7		-4.0		12.2		OURLD		79.1		
14:38:00	6.9		17.6		70.5		2.1		-2.0	4.0000	2.5		OPEN F		74.6F		
200	6.8		17.5		74.4		2.1		-2.8		2.6		OPEN		74.4		
300	27.8		18.2		57.1		1.7		-4.0		12.3		OURLD		78.9		
14:40:00	7.2		17.7		67.5		2.0		-2.0	4.0000	2.2		OPEN F		75.2F		
200	7.2		17.6		67.9		2.0		-2.0		2.2		OPEN		74.8		
300	28.1		18.1		59.4		1.8		-3.9		12.4		OURLD		78.8		
14:42:00	7.3		17.8		63.5		2.0		-2.0	4.0000	2.0		OPEN F		73.8F		
200	7.2		17.7		66.1		2.0		-2.3		2.0		OPEN		74.6		
300	28.4		18.0		61.5		1.8		-3.8		12.4		OURLD		78.6		
14:44:00	7.4		17.9		59.7		1.9		-4.0	16.000	1.7		OPEN F		74.2F		
200	7.3		17.7		64.2		2.0		-2.7		2.0		OPEN		74.2		
300	28.6		17.9		63.5		1.9		-3.8		12.5		OURLD		78.5		

123 TR VIRL NTAL SUL S ONOL GAS SMI N CL NY ER MIS CMF ICE RAN

1113	01	02	03	04	05	06	07	08	09	10	11	12	13	14	15	16
100	CO		OXYGEN		NOX		CO2		CO		THC		STACK		MELS	
200	PPM		PERCENT		PPM		PERCENT		PPM		PPM C3		TEMP		TEMP	
12:40:00	6.1		17.7		64.2		2.1		-4.0	16.000	0.4		OPEN F		80.6F	
200	6.0		17.7		64.3		2.0		-4.0		0.3		OPEN		80.6	
300	6.6		17.3		72.8		2.3		-3.8		0.3		OVRLD		80.0	
12:42:00	5.5		17.7		63.2		2.1		-4.0	16.000	0.3		OPEN F		81.5F	
200	5.8		17.7		63.9		2.0		-3.8		0.3		OPEN		81.0	
300	6.5		17.3		72.3		2.2		-3.8		0.3		OVRLD		80.0	
12:44:00	5.5		17.6		64.5		2.1		-4.0	16.000	0.2		OPEN F		81.6F	
200	5.7		17.6		63.7		2.0		-3.9		0.3		OPEN		81.3	
300	6.4		17.3		71.9		2.2		-3.8		0.3		OVRLD		80.0	
12:46:00	5.7		17.6		66.0		2.2		-4.0	16.000	0.1		OPEN F		79.5F	
200	5.5		17.6		65.3		2.1		-4.0		0.2		OPEN		78.4	
300	6.4		17.3		71.6	END T-1-1	2.2		-3.8		0.3		OVRLD		80.0	
12:48:00	5.1		17.6		66.5		2.1		-4.0	16.000	0.3		OPEN F		80.2F	
200	5.5		17.6		65.8		2.1		-3.7		0.2		OPEN		78.9	
300	6.3		17.4		71.2		2.2		-3.8		0.3		OVRLD		79.9	
12:53:56	-1.3		0.0		131.7		0.1		-4.0	16.000	0.3		OPEN F		83.1F	
200	1.5		7.8		96.7		0.8		-3.5		0.3		OPEN		82.0	
300	6.0		16.9		72.1		2.1		-3.8		0.4		OVRLD		80.1	
12:54:16	-1.2		0.0		133.0	Span System 143	0.1		-4.0	16.000	0.3		OPEN F		83.6F	
200	-1.3		0.0		132.2		0.1		-2.0		0.4		OPEN		83.4	
300	5.7		16.3		73.9		2.0		-3.8		0.4		OVRLD		80.1	
12:57:38	-1.3		-0.1		12.7		12.6	Span System 12.0	-4.0	16.000	0.3		OPEN F		83.4F	
200	-1.2		0.0		118.8		4.4		-2.9		0.2		OPEN		82.9	
300	5.4		15.7		75.7		2.0		-3.7		0.4		OVRLD		80.1	
13:01:58	-1.2		0.0		74.5		0.3		-2.0	4.0000	0.1		OPEN F		70.2F	
200	-1.2		0.5		46.4		1.8		-2.3		0.2		OPEN		73.7	
300	4.8		14.6		71.7		2.3		-3.6		0.4		OVRLD		80.0	
13:06:17	-1.2		22.1	Span 22.4	0.2		0.1		-4.0	16.000	-0.8		OPEN F		74.5F	
200	-1.1		20.5		19.0		0.1		-2.6		-0.8		OPEN		70.8	
300	4.0		14.0		68.8		2.0		-3.6		0.3		OVRLD		79.0	

123 TRC ENVIRONMENTAL CONSULTANTS OLSONQUIN GAS TRANSMISSION COMPANY HANOVER AIR EMISSION COMPLIANCE PROGRAM

1113	01	02	03	04	05	06	07	08	09	10	11	12	13	14	15
100	CO		OXYGEN		NOX		CO2		CO		THC		STACK		MELS
200	PPM		PERCENT		PPM		PERCENT		PPM		PPM C3		TEMP		TEMP
13:11:06	-1.2		0.1		-0.2		0.1		-4.0	16.000	-0.3		OPEN F		77.9F
200	-1.2		0.5		0.0		0.1		-2.8		-0.2		OPEN		78.8
300	3.6		12.9		65.7		1.9		-3.5		0.2		OVRLD		78.8
13:13:26	36.9		0.0		-0.2		0.1		-4.0	16.000	-0.2		OPEN F		77.2F
200	5.5		0.2		-0.1		0.1		-3.0		-0.2		OPEN		78.3
300	3.3		12.3		63.3		1.8		-3.5		0.2		OVRLD		78.7
13:33:58	-1.3		21.3		0.2		0.1		-4.0	16.000	8.0		OPEN F		77.9F
200	-1.2		21.2		0.4		0.1		-3.9		3.4		OPEN		78.2
300	2.1		12.9		38.8		1.1		-3.6		0.3		OVRLD		78.3
13:54:00	6.6		18.1		28.0		2.0		-4.0	16.000	-0.2		OPEN F		79.0F
200	-0.2		20.8		1.3		0.5		-4.0		0.5		OPEN		79.4
300	0.2		15.2		11.9		0.6		-3.6		0.8		OVRLD		77.6
13:56:00	6.8		17.6		70.2		2.1		-4.0	16.000	1.1		OPEN F		80.2F
200	6.5		17.7		64.6		2.1		-3.8		0.6		OPEN		79.0
300	0.5		15.8		9.8		0.7		-3.7		0.9		OVRLD		77.6
13:58:00	8.1		17.5		74.0		2.2		-4.0	16.000	4.5		OPEN F		80.0F
200	6.8		17.6		68.2		2.1		-3.9		1.6		OPEN		79.5
300	0.8		16.4		12.1		0.4		-3.8		1.0		OVRLD		77.5
14:00:00	16.3		17.5		78.8		2.2		-4.0	16.000	7.5		OPEN F		80.6F
200	12.6		17.5		78.0		2.2		-4.0		6.4		OPEN		80.3
300	1.4		16.9		13.6		0.4		-3.8		1.2		OVRLD		77.7
14:02:00	18.2		17.4		78.8		2.2		-4.0	16.000	14.0		OPEN F		81.1F
200	15.2		17.4		78.5		2.2		-3.8		8.5		OPEN		80.9
300	2.0		17.5		13.7		0.5		-3.9		1.7		OVRLD		78.0
14:04:00	35.9		17.3		79.0		2.3		-4.0	16.000	26.0		OPEN F		80.9F
200	21.9		17.3		78.4		2.2		-3.8		13.7		OPEN		80.9
300	3.3		17.8		13.7		0.5		-3.9		2.6		OVRLD		78.4
14:06:00	73.0		17.3		80.2		2.3		-4.0	16.000	59.5		OPEN F		80.2F
200	48.8		17.3		80.1		2.3		-4.0		44.3		OPEN		80.7
300	5.7		17.6		16.3		0.6		-3.9		4.6		OVRLD		78.6

ZEROCS

9.6 SPAN SYSTEM

IN STACK

START T-2 1358

TEST 2 11/13/90 1458 START

OMIT DATA SEE NEXT PG

.23 TRC ENVIRONMENTAL CONSULTANTS ALGONQUIN GAS TRANSMISSION COMPANY HANOVER NJ EMISSION COMPLIANCE PROGRAM

1113	01	02	03	04	05	06	07	08	09	10	11	12	13	14	15	16
100	CO		OXYGEN		NOX		CO2		CO		THC		STACK		MFLS	
200	PPM		PERCENT		PPM		PERCENT		PPM		PPM C3		TEMP		TEMP	
14:46:00	7.4		18.0		55.5		1.9		-4.0	16.000	1.7		OPEN F		74.4F	
200	7.3		17.9		57.1		1.9		-3.0		1.6		OPEN		74.1	
300	28.9		17.8		65.3		2.0		-3.8		12.6		OURLD		78.3	
14:48:00	-1.2		20.7		30.5		0.3		-4.0	16.000	1.8		OPEN F		76.2F	
200	5.7		18.3		57.7		1.5		-3.0		1.7		OPEN		74.8	
300	28.9		17.8		66.3		2.0		-3.8		12.6		OURLD		78.2	
14:50:00	4.8		19.3		4.0		1.6		-4.0	16.000	1.0		OPEN F		76.4F	
200	1.5		20.4		2.2		1.0		-3.6		1.5		OPEN		76.5	
300	29.1		17.7		66.5		2.0		-3.8		12.6		OURLD		78.1	
14:52:00	5.6		18.6		40.7		1.6		-4.0	16.000	1.4		OPEN F		76.8F	
200	4.3		19.2		24.4		1.4		-3.6		1.5		OPEN		76.5	
300	29.4		17.6		67.8		2.0		-3.8		12.7		OURLD		78.0	
14:54:00	6.0		18.7		38.0		1.6		-4.0	4.0000	1.5		OPEN F		76.9F	
200	4.8		19.0		30.3		1.4		-3.6		1.5		OPEN		76.7	
300	29.4		17.6		68.2		2.0		-3.7		12.7		OURLD		78.0	
14:56:00	5.6		18.7		36.5		1.6		-2.0	4.0000	1.3		OPEN F		77.0F	
200	5.6		18.7		37.2		1.6		-3.1		1.3		OPEN		77.1	
300	29.3		17.7		67.0		2.0		-3.6		12.7		OURLD		77.8	
14:58:00	7.0		18.3		39.7		1.8		-4.0	16.000	1.3		OPEN F		75.0F	
200	5.8		18.6		37.0		1.6		-3.0		1.2		OPEN		75.8	
300	29.3		17.7		65.9		2.0		-3.6		12.6		OURLD		77.7	
15:00:00	7.0		18.3		40.2		1.8		-4.0	4.0000	1.0		OPEN F		75.3F	
200	7.2		18.3		40.5		1.8		-3.0		1.0		OPEN		75.5	
300	29.0		17.7		64.6		2.0		-3.6		12.4		OURLD		77.5	
15:02:00	7.2		18.3		40.2		1.8		-4.0	16.000	1.0		OPEN F		75.2F	
200	7.3		18.3		40.3		1.8		-3.3		1.0		OPEN		75.4	
300	28.6		17.7		63.3		2.0		-3.6		11.9		OURLD		77.3	
15:04:00	6.7		18.4		39.7		1.7		-2.0	16.000	1.0		OPEN F		75.9F	
200	7.3		18.3		40.2		1.7		-3.4		1.0		OPEN		75.8	
300	27.7		17.8		62.0		2.0		-3.6		11.0		OURLD		77.1	

OUT OF STACK

123 TRC ENVIRONMENTAL CONSULTANTS ALGONQUIN GAS TRANSMISSION COMPANY HANOVER NJ EMISSION COMPLIANCE PROGRAM

1113	01	02	03	04	05	06	07	08	09	10	11	12	13	14	15	16
100	CO		OXYGEN		NOX		CO2		~~CO~~		THC		STACK		MFLS	
200	PPM		PERCENT		PPM		PERCENT		~~PPM~~		PPM C3		TEMP		TEMP	
15:06:00	6.0		18.7		35.2		1.6		-4.0	16.000	0.9		OPEN F		75.6F	
200	6.1		18.6		36.9		1.6		-3.8		0.9		OPEN		75.8	
300	25.5		17.8		60.5		1.9		-3.6		8.9		OURLD		77.0	
15:08:00	6.0		18.7		33.5		1.6		-4.0	16.000	0.9		OPEN F		77.3F	
200	6.0		18.6		35.5		1.6		-3.9		0.9		OPEN		76.1	
300	21.7		17.9		58.9		1.9		-3.5		8.6		OURLD		76.8	
15:10:00	6.0		18.7		33.8		1.6		-4.0	16.000	0.8		OPEN F		74.4F	
200	6.0		18.7		33.6		1.6		-3.6		0.8		OPEN		75.6	
300	17.9		17.9		57.5		1.9		-3.4		8.4		OURLD		76.6	

~~OUT OF STACK~~ 8BM CEM STILL IN STACK

15:12:00	5.9		18.7		33.8		1.6		-4.0	16.000	0.8		OPEN F		74.6F	
200	5.9		18.7		33.7		1.6		-3.7		0.8		OPEN		75.2	
300	14.1		18.0		56.0		1.9		-3.4		8.0		OURLD		76.3	
15:14:00	6.1		18.6		33.8		1.6		-4.0	16.000	0.8		OPEN F		76.1F	
200	5.9		18.6		33.8		1.6		-3.8		0.8		OPEN		75.3	
300	10.4		18.0		54.6		1.8		-3.4		5.8		OURLD		76.2	
15:16:00	7.1		18.4		38.2		1.7		-4.0	16.000	0.7		OPEN F		75.6F	
200	6.7		18.5		35.8		1.6		-3.8		0.7		OPEN		75.7	
300	8.5		18.1		53.4		1.8		-3.4		4.4		OURLD		76.0	
15:18:00	7.2		18.4		38.2		1.7		-4.0	16.000	0.7		OPEN F		77.3F	
200	6.9		18.4		37.0		1.6		-3.9		0.7		OPEN		75.6	
300	7.6		18.1		52.2		1.8		-3.4		3.5		OURLD		75.9	
15:20:00	7.3		18.4		37.7		1.7		-4.0	16.000	0.7		OPEN F		75.9F	
200	7.2		18.4		37.7		1.7		-3.3		0.7		OPEN		76.0	
300	7.0		18.1		51.0		1.8		-3.4		2.7		OURLD		75.8	
15:22:00	6.8		18.4		37.2		1.7		-4.0	16.000	0.7		OPEN F		77.0F	
200	7.1		18.4		37.5		1.7		-3.7		0.7		OPEN		76.0	
300	6.7		18.2		49.9		1.8		-3.4		2.2		OURLD		75.7	
15:24:00	6.9		18.6		35.7		1.7		-4.0	16.000	0.8		OPEN F		75.7F	
200	6.9		18.4		37.0		1.7		-3.8		0.7		OPEN		76.1	
300	6.5		18.2		48.4		1.7		-3.4		1.9		OURLD		75.5	

123 TRC ENVIRONMENTAL CONSULTANTS ALGONQUIN GAS TRANSMISSION COMPANY HANOVER NJ EMISSION COMPLIANCE PROGRAM

1113	01	02	03	04	05	06	07	08	09	10	11	12	13	14	15	16
LOO	CO		OXYGEN		NOX		CO2		CO		THC		STACK		MFLS	
200	PPM		PERCENT		PPM		PERCENT		PPM		PPM C3		TEMP		TEMP	
15:26:00	6.8		18.6		35.2		1.7		-4.0	16.000	0.7		OPEN F		75.7F	
200	6.7		18.6		35.2		1.7		-4.0		0.5		OPEN		75.7	
300	6.4		18.3		47.0		1.7		-3.4		1.6		OVRLD		75.5	
15:28:00	6.8		18.6		35.2		1.7		-4.0	16.000	0.9		OPEN F		77.1F	
200	6.7		18.6		35.2		1.7		-3.8		0.6		OPEN		75.8	
300	6.3		18.3		45.4		1.7		-3.4		1.5		OVRLD		75.6	
15:30:00	6.6		18.6		35.2		1.7		-4.0	16.000	0.9		OPEN F		73.4F	
200	6.7		18.6		35.1		1.7		-3.6		0.8		OPEN		74.2	
300	6.3		18.4		43.9		1.7		-3.4		1.3		OVRLD		75.5	
15:32:00	6.8		18.6		35.5		1.7		-2.0	4.0000	0.7		OPEN F		75.5F	
200	6.8		18.6		35.3		1.6		-3.5		0.7		OPEN		74.2	
300	6.3		18.4		42.5		1.7		-3.4		1.2		OVRLD		75.5	
15:34:00	6.9		18.5		36.3		1.7		-4.0	16.000	0.6		OPEN F		75.9F	
200	6.9		18.5		35.6		1.6		-3.4		0.7		OPEN		75.0	
300	6.3		18.4		41.1		1.6		-3.4		1.2		OVRLD		75.6	
TEST 2 COMPLETE																
15:36:00	30.6		19.0		20.5		1.4		-4.0	16.000	1.4		OPEN F		75.5F	
200	29.4		18.9		29.3		1.4		-3.6		1.4		OPEN		76.3	
300	7.1		18.5		39.3		1.6		-3.4		1.1		OVRLD		75.6	
15:38:00	34.5		19.0		16.3		1.5		-4.0	16.000	1.5		OPEN F		75.5F	
200	31.9		18.9		21.2		1.4		-3.8		1.5		OPEN		75.9	
300	8.0		18.5		37.5		1.6		-3.5		1.1		OVRLD		75.6	
15:40:00	33.5		19.0		15.7		1.0		-4.0	16.000	32.7		OPEN F		74.6F	
200	33.4		18.9		19.0		1.4		-4.0		10.9		OPEN		76.0	
300	8.9		18.6		35.8		1.6		-3.6		2.1		OVRLD		75.6	
15:42:00	-0.9		21.1		2.0		0.2		-4.0	16.000	13.8		OPEN F		75.4F	
200	3.6		20.6		8.1		0.3		-4.0		20.9		OPEN		74.8	
300	8.6		18.7		33.7		1.5		-3.6		2.5		OVRLD		75.7	
15:44:00	-1.3		21.1		0.5		0.2		-4.0	16.000	11.4		OPEN F		75.7F	
200	1.2		20.8		4.5		0.2		-3.9		15.2		OPEN		75.1	
300	8.4		18.8		31.7		1.5		-3.6		2.8		OVRLD		75.7	

123 TRC ENVIRONMENTAL CONSULTANTS ALGONQUIN GAS TRANSMISSION COMPANY HANOVER NJ EMISSION COMPLIANCE PROGRAM

1113	01	02	03	04	05	06	07	08	09	10	11	12	13	14	15	16
100	CO		OXYGEN		NOX		CO2		CO		THC		STACK		MFLS	
200	PPM		PERCENT		PPM		PERCENT		PPM		PPM C3		TEMP		TEMP	
16:03:17	-1.2 RACK ZERO		0.0 RACK ZERO		50.7 RACK ZERO		0.1 ZERO RACK		-4.0	16.000	0.2		OPEN F		73.7F	
200	-1.1		3.5		50.5		0.1		-3.6		0.2		OPEN		74.3	
300	6.3		18.8		20.9		1.0		-3.6		3.3		DURLD		75.3	
16:07:32	-1.0		-0.1		145.7 RACK SPAN		0.1		-4.0	16.000	0.2		OPEN F		75.1F	
200	-1.0		0.0		88.8		0.1		-3.7		0.1		OPEN		74.8	
300	5.8		17.6		20.5		0.9		-3.6		3.2		DURLD		75.2	
16:12:39	-0.8		0.0		74.2 MID RACK		0.1		-4.0	16.000	0.2		OPEN F		75.1F	
200	-0.9		0.0		74.9		0.1		-3.4		0.1		OPEN		75.1	
300	5.1		15.7		27.2		0.8		-3.4		3.1		DURLD		75.1	
16:14:36	-1.1		11.2 RACK MID		2.2		0.1		-4.0	16.000	0.2		OPEN F		75.3F	
200	-0.9		7.4		67.2		0.1		-3.7		0.1		OPEN		75.1	
300	4.9		15.4		28.0		0.7		-3.4		3.1		DURLD		75.1	
16:17:23	-1.0		22.5		-0.7		0.1		-2.0	4.0000	0.1		OPEN F		76.0F	
200	-0.9		18.8		-0.4		0.1		-4.0		0.0		OPEN		75.6	
300	4.6		15.4		36.7		0.7		-3.4		3.1		DURLD		75.1	
16:20:59	-1.3		4.4		-0.7		12.5 12% SPAN		-2.0	4.0000	0.2		OPEN F		74.9F	
200	-1.0		18.7		-0.7		[illegible]		-3.6		0.1		OPEN		75.7	
300	4.1		15.7		24.1		0.6		-3.4		3.1		DURLD		75.1	
16:22:48	-1.3		0.0		-0.5		5.5 MID		-4.0	16.000	0.2		OPEN F		75.5F	
200	-1.2		6.2		-0.3		[illegible]		-3.2		0.0		OPEN		75.3	
300	3.8		15.1		22.8		0.7		-3.4		3.0		DURLD		75.0	
16:26:35	41.3 SPAN		0.0		-0.5		0.1		-4.0	16.000	0.0		OPEN F		75.9F	
200	40.2		0.0		-0.6		0.1		-2.6		0.2		OPEN		75.4	
300	5.5		13.8		20.4		0.6		-3.4		3.0		DURLD		74.9	
16:30:40	7.4 RACK MID		0.0		-0.5		0.1		-2.0	4.0000	0.1		OPEN F		77.1F	
200	7.3		0.0		-0.6		0.1		-2.5		0.1		OPEN		76.8	
300	5.5		12.6		18.0		0.5		-3.2		2.9		DURLD		75.0	
16:33:05	2.5		0.0		-0.7		0.1		-4.0	16.000	0.2 ZERO ANALYZER		OPEN F		76.1F	
200	2.3		0.0		-0.6		0.1		-2.4				OPEN		76.0	
300	5.6		12.0		16.8		0.5		-3.2		2.9		DURLD		75.0	

123 TRC ENVIRONMENTAL CONSULTANTS ALGONQUIN GAS TRANSMISSION COMPANY HANOVER NJ EMISSION COMPLIANCE PROGRAM
1113 01 02 03 04 05 06 07 08 09 10 11 12 13 14 15 16

100	CO PPM	OXYGEN PERCENT	NOX PPM	CO2 PERCENT	CO PPM		THC PPM C3	STACK TEMP	MFLS TEMP
16:38:46	-0.9	21.4	-0.5	0.2	-2.0	4.0000	9.1 9.6 ANALYZER	OPEN F	76.0F
200	1.3	12.1	-0.4	0.1	-2.1		4.1	OPEN	76.3
300	3.5	10.9	14.3	0.3	-3.0		3.3	NURLD	75.1
16:46:49	-1.3 ZERO	0.8	135.5 SPAN	0.1 SYSTEM	-2.0	4.0000	-0.5	OPEN F	74.1F
200	-1.2	0.7	132.1 SYSTEM	0.1	-2.4		-0.4	OPEN	74.1
300	2.3	9.9	19.4	0.3	-3.0		1.1	NURLD	75.0
16:53:26	-1.3 ZERO	0.2 ZERO	0.0 ZERO	0.1 SYSTEM ZEROS	-2.0	4.0000	-0.4	OPEN F	77.3F
200	-1.2	0.3	41.6	0.1	-2.4		-0.5	OPEN	75.7
300	2.3	7.9	28.6	0.3	-3.0		0.5	NURLD	75.0
16:57:17	-1.3	22.0 SPAN	-0.2	0.1	-2.0	4.0000	-0.4	OPEN F	77.9F
200	-1.2	11.4	-0.2	0.1	-2.3		-0.4	OPEN	77.8
300	2.3	6.6	28.6	0.3	-2.9		0.4	NURLD	75.2
17:01:59	-1.3	0.2	0.2	12.5 SPAN	-2.0	4.0000	-0.3	OPEN F	78.3F
200	-1.3	2.6	0.1	12.1	-2.0		-0.4	OPEN	78.0
300	2.3	6.6	28.6	0.5	-2.8		0.4	NURLD	75.5
17:09:52	36.4 SPAN	0.2	-0.5	0.1	-2.0	16.000	-0.2	OPEN F	80.2F
200	11.1	0.1	-0.4	0.2	-2.5		-0.3	OPEN	79.7
300	2.8	6.6	21.6	1.1	-2.6		0.3	NURLD	76.1
17:14:35	-1.3	21.3	-0.5	0.2	-4.0	16.000	-0.2 SYSTEM ZERO	OPEN F	79.5F
200	5.6	17.6	-0.4	0.1	-3.2		0.5	OPEN	79.9
300	4.0	7.7	14.5	1.1	-2.7		0.2	NURLD	76.6
17:18:22	-1.3	21.3	-0.5	0.2	-4.0	16.000	8.5 SYSTEM SPAN	OPEN F	79.8F
200	-1.2	21.3	-0.4	0.2	-3.7		7.5	OPEN	80.1
300	4.0	7.8	14.5	1.1	-2.7		0.5	NURLD	76.9

ALGONQUIN

UNIT 2

TESTS 1, 2, 3

UNIT 1

TEST 3

11/14/90

front

TRC ENVIRONMENTAL CONSULTANTS ALGONQUIN GAS TRANSMISSION COMPANY HANOVER NJ EMISSION COMPLIANCE PROGRAM

123 1113 100 200	01 CO PPM	02	03 OXYGEN PERCENT	04	05 NOX PPM	06	07 CO2 PERCENT	08	09 CO PPM	10	11 THC PPM C3	12	13 STACK TEMP	14	15 HFLS TEMP	16
05:22:47	0.0 ANALYZER ZERO		21.6		0.2 ANALYZER ZERO		0.1		-4.0	16.000	0.1		OPEN F		80.0F	
200	-0.9		21.6		0.2		0.1		-3.5		0.0		OPEN		79.7	
300	-1.2		21.6		0.3		0.1		-3.0		0.1		NURLD		81.6	
05:26:51	-0.2 RACK ZERO		0.1 RACK ZERO		0.0 RACK ZERO		0.1 RACK ZERO		-4.0	16.000	0.0		OPEN F		80.3F	
200	-0.1		0.4		0.0		0.1		-4.0		0.0		OPEN		80.2	
300	-1.2		20.8		0.3		0.1		-3.0		0.1		NURLD		81.4	
05:35:37	0.1		0.0		142.7 SPAN		0.1		-4.0	16.000	0.1		OPEN F		80.1F	
200	0.2		0.0		141.6		0.1		-4.0		0.1		OPEN		79.4	
300	-1.0		18.0		13.2		0.1		-3.2		0.1		NURLD		81.2	
05:39:48	0.3		0.0		73.8 MID		0.1		-4.0	16.000	1.2		OPEN F		81.1F	
200	0.0		0.0		111.8		0.1		-4.0		0.5		OPEN		80.4	
300	-0.9		16.5		20.6		0.1		-3.1		0.1		NURLD		81.1	
05:41:34	-0.2		0.0		73.0		0.1		-4.0	16.000	0.2 ANALYZER ZERO		OPEN F		79.7F	
200	0.2		0.0		73.9		0.1		-4.0		0.6		OPEN		79.6	
300	-0.9		15.8		23.0		0.1		-3.2		0.1		NURLD		81.1	
05:46:09	0.0		11.4 MID		0.2		0.1		-4.0	16.000	9.7 SPAN		OPEN F		80.6F	
200	0.0		11.4		0.3		0.1		-4.0		9.1		OPEN		80.7	
300	-0.7		14.4		25.7		0.1		-3.2		0.7		NURLD		80.8	
05:49:35	0.2		22.7 SPAN		0.2		0.1		-4.0	16.000	3.9		OPEN F		81.2F	
200	0.1		15.7		0.2		0.1		-4.0		5.3		OPEN		80.8	
300	-0.7		14.3		25.6		0.1		-3.3		0.8		NURLD		80.8	
05:52:21	0.2		22.7		0.2		0.1		-4.0	16.000	4.7 MID		OPEN F		81.1F	
200	0.2		22.7		0.1		0.1		-4.0		2.9		OPEN		80.9	
300	-0.6		14.3		25.6		0.1		-3.4		1.1		NURLD		80.7	
05:56:00	0.9		0.0		0.2		12.1 SPAN		-4.0	16.000	4.5		OPEN F		80.2F	
200	1.6		0.0		0.4		12.2		-4.0		4.5		OPEN		80.3	
300	-0.5		13.0		25.6		0.9		-3.4		1.4		NURLD		80.6	
05:58:11	1.9		0.0		0.2		5.3 MID		-4.0	16.000	-1.0		OPEN F		80.8F	
200	1.4		0.2		0.3		5.7		-4.0		3.9		OPEN		80.5	
300	-0.4		12.3		25.6		1.0		-3.5		1.3		NURLD		80.6	

123 TRC ENVIRONMENTAL CONSULTANTS ALGONQUIN GAS TRANSMISSION COMPANY HANOVER NJ EMISSION CMPLIANCE PROGRAM

1114	01	02	03	04	05	06	07	08	09	10	11	12	13	14	15	16
100	CO		OXYGEN		NOX		CO2		CO		THC		STACK		MELS	
200	PPM		PERCENT		PPM		PERCENT		PPM		PPM C3		TEMP		TEMP	
06:01:43	41.5	SPAN	0.1		0.2		0.2		-4.0	16.000	-1.3		OPEN F		81.7F	
200	71.2		0.3		0.1		1.9		-4.0		-1.1		OPEN		81.4	
300	-0.3		11.5		25.6		1.2		-3.6		1.3		NURLD		80.6	
06:07:35	9.2	MID	0.0		0.2		0.1		-4.0	16.000	-0.8		OPEN F		80.7F	
200	9.1		0.0		0.2		0.1		-4.0		-1.2		OPEN		80.6	
300	1.7		9.4		25.6		1.2		-3.6		1.2		NURLD		80.6	
06:09:32	0.8		21.2		0.2		0.2		-4.0	16.000	-0.1		OPEN F		79.3F	
200	7.3		3.6		0.2		0.1		-3.9		-0.9		OPEN		80.4	
300	2.1		8.7		25.6		1.2		-3.6		1.1		NURLD		80.5	
06:19:01	0.0		0.2		0.2		0.1	SYSTEM ZERO	-4.0	16.000	-0.2		OPEN F		80.3F	
200	2.4		10.6		0.8		0.1		-4.0		-0.7		OPEN		81.0	
300	2.6		7.9		25.6		1.2		-3.8		1.4		NURLD		80.3	
06:23:12	-0.2		0.0		132.7		0.1		-4.0	16.000	-0.1		OPEN F		79.9F	
200	-0.1		0.0		52.4		0.1		-4.0		-0.1		OPEN		80.3	
300	2.7		6.5		28.0		1.2		-4.0		1.4		NURLD		80.3	
06:23:39	-0.1		0.0		134.5	SYSTEM SPAN	0.1		-4.0	16.000	-0.1		OPEN F		80.4F	
200	-0.1		0.0		60.2		0.1		-4.0		-0.1		OPEN		80.2	
300	2.7		6.5		28.0		1.2		-4.0		1.4		NURLD		80.3	
06:26:51	-0.1		22.1	SYSTEM SPAN	6.7		0.1		-4.0	16.000	-0.9		OPEN F		79.1F	
200	-0.2		13.7		89.1		0.1		-3.6		-0.9		OPEN		80.3	
300	2.7		6.3		36.5		1.2		-3.9		1.4		NURLD		80.4	
06:29:48	-1.3		1.0		1.0		11.9	SYSTEM SPAN	-4.0	16.000	-0.2		OPEN F		80.1F	
200	-0.4		16.1		35.6		2.3		-3.7		-0.6		OPEN		80.3	
300	2.7		7.1		36.5		1.2		-3.9		1.3		NURLD		80.4	
06:32:39	36.1		0.0		0.2		0.5		-4.0	16.000	-0.6		OPEN F		81.5F	
200	10.2		0.0		0.5		7.2		-3.6		-0.1		OPEN		80.5	
300	3.5		7.1		28.2		1.7		-3.9		1.3		NURLD		80.4	
06:32:59	38.5		0.0		0.2		0.5		-4.0	16.000	-0.2		OPEN F		80.7F	
200	13.3		0.0		0.4		6.4		-3.6		-0.2		OPEN		80.6	
300	3.5		7.1		28.2		1.7		-3.9		1.3		NURLD		80.4	

123 TRC ENVIRONMENTAL CONSULTANTS ALGONQUIN GAS TRANSMISSION COMPANY HANOVER NJ EMISSION COMPLIANCE PROGRAM

1114	01	02	03	04	05	06	07	08	09	10	11	12	13	14	15	16
100	CO		OXYGEN		NOX		CO2		CO		THC		STACK		MELS	
200	PPM		PERCENT		PPM		PERCENT		PPM		PPM C3		TEMP		TEMP	
06:37:18	7.4 SPN		0.4		0.2		0.1		-4.0	16.000	0.0		OPEN F		80.3F	
200	4.4		8.2		0.2		0.1		-3.6		-0.1		OPEN		78.7	
300	4.8		7.5		18.9		1.7		-3.9		1.3		OVRLD		80.4	
06:37:38	8.0 SYSTEM SPAN MID		0.3		0.2		0.1		-4.0	16.000	0.0		OPEN F		80.4F	
200	5.3		7.2		0.2		0.1		-3.7		0.0		OPEN		78.9	
300	4.8		7.5		18.9		1.7		-3.9		1.3		OVRLD		80.4	
06:39:55	-0.3		20.3		0.2		0.2		-4.0	16.000	1.3		OPEN F		79.9F	
200	4.9		6.7		0.2		0.1		-3.7		0.4		OPEN		79.4	
300	5.0		7.5		16.2		1.7		-3.9		1.3		OVRLD		80.4	
06:41:54	-0.4		21.4		0.0		0.2		-2.0	4.0000	0.7		OPEN F		79.9F	
200	-0.5		21.2		0.1		0.2		-3.6		1.0		OPEN		79.2	
300	5.0		8.2		13.8		1.7		-3.9		1.3		OVRLD		80.4	
06:44:05	-0.3		21.4		0.2		0.1		-4.0	16.000	11.9		OPEN F		79.4F	
200	-0.4		20.9		0.1		0.1		-3.8		5.0		OPEN		79.3	
300	5.0		9.2		11.1		1.7		-3.9		1.5		OVRLD		80.4	
06:45:50	-0.2		21.5		0.0		0.1		-4.0	16.000	0.0 zero		OPEN F		79.3F	
200	-0.2		21.5		0.1		0.1		-4.0		4.4		OPEN		79.3	
300	5.0		9.2		11.1		1.7		-3.9		1.5		OVRLD		80.4	
06:47:15	-0.3		7.6		0.0		0.1		-2.0	4.0000	8.9 span		OPEN F		79.2F	
200	-0.2		16.7		0.0		0.1		-4.0		4.4		OPEN		79.0	
300	5.0		9.6		11.1		1.7		-3.9		1.1		OVRLD		80.4	
							IN THE STACK									
07:06:00	8.2		17.5		64.7		2.2		-4.0	16.000	0.0		OPEN F		78.5F	
200	8.2		17.5		64.5		2.2		-4.0		0.0		OPEN		78.0	
300	3.8		14.1		17.2		0.8		-3.9		0.7		OVRLD		79.4	
07:08:00	7.6		17.5		64.7		2.3		-4.0	16.000	-0.1		OPEN F		77.9F	
200	7.8		17.5		64.6		2.3		-3.5		-0.1		OPEN		78.3	
300	3.7		14.7		19.4		0.8		-3.9		0.8		OVRLD		79.3	
07:10:00	7.2		17.4		65.5		2.3		-4.0	16.000	-0.2		OPEN F		78.5F	
200	7.6		17.4		65.3		2.3		-3.5		-0.1		OPEN		78.4	
300	4.0		14.5		21.6		0.9		-3.9		0.8		OVRLD		79.3	

123 TRC ENVIRONMENTAL CONSULTANTS ALGONQUIN GAS TRANSMISSION COMPANY HANOVER NJ EMISSION CMPLIANCE PROGRAM

1114	01	02	03	04	05	06	07	08	09	10	11	12	13	14	15	16
100	CO		OXYGEN		NOX		CO2		CO		THC		STACK		MELS	
200	PPM		PERCENT		PPM		PERCENT		PPM		PPM C3		TEMP		TEMP	
07:12:00	6.9		17.4		66.7		2.3		-4.0	16.000	-0.1		OPEN F		78.5F	
200	6.8		17.4		66.3		2.3		-4.0		-0.1		OPEN		78.3	
300	4.2		14.4		23.8		1.0		-3.9		0.4		OVRLD		79.3	
07:14:00	7.1		17.4		65.7		2.3		-4.0	16.000	0.0		OPEN F		78.3F	
200	6.6		17.4		66.3		2.3		-4.0		0.0		OPEN		78.5	
300	4.4		14.3		26.0		1.1		-3.9		0.4		OVRLD		79.3	
07:16:00	6.3		17.5		67.0		2.2		-4.0	16.000	0.0		OPEN F		78.7F	
200	6.6		17.4		66.3		2.2		-3.9		0.0		OPEN		78.1	
300	4.3		14.1		28.2		1.1		-3.9		0.4		OVRLD		79.2	
07:18:00	5.5		17.7		63.2		1.9		-4.0	16.000	0.0		OPEN F		79.1F	
200	6.1		17.5		64.0		2.1		-3.8		0.0		OPEN		79.2	
300	4.5		14.7		30.3		1.2		-3.9		0.4		OVRLD		79.1	
07:20:00	4.8		18.3		52.0		1.8		-4.0	16.000	0.1		OPEN F		78.6F	
200	5.4		17.8		59.7		1.9		-3.7		0.0		OPEN		78.9	
300	4.6		15.3		32.0		1.2		-3.9		0.4		OVRLD		79.0	
07:22:00	4.8		18.3		50.7		1.8		-4.0	16.000	0.1		OPEN F		78.7F	
200	4.8		18.3		50.3		1.8		-4.0		0.0		OPEN		78.7	
300	4.8		15.9		31.3		1.3		-3.9		0.5		OVRLD		79.0	
07:24:00	4.7		18.3		52.0		1.8		-4.0	16.000	0.1		OPEN F		78.2F	
200	4.7		18.3		50.8		1.8		-4.0		0.0		OPEN		78.3	
300	5.0		16.5		28.6		1.4		-3.9		0.5		OVRLD		78.9	
07:26:00	5.1		18.0		49.5		1.9		-2.0	4.0000	0.0		OPEN F		78.0F	
200	4.6		18.3		50.2		1.8		-3.8		0.0		OPEN		78.5	
300	5.2		16.6		26.2		1.4		-3.9		0.5		OVRLD		78.8	
07:28:00	4.3		18.4		52.0		1.8		-4.0	16.000	0.0		OPEN F		78.6F	
200	4.6		18.2		53.9		1.8		-4.0		0.0		OPEN		77.9	
300	5.3		16.4		27.9		1.5		-3.9		0.5		OVRLD		78.8	
07:30:00	4.7		18.4		49.5		1.8		-4.0	16.000	0.0		OPEN F		78.5F	
200	4.5		18.3		51.9		1.8		-3.9		0.0		OPEN		77.9	
300	5.5		17.0		29.5		1.1		-3.9		0.5		OVRLD		78.7	

0720 START T-1-2

TEST 2-1 0730 11/14/90

123 TRC ENVIRONMENTAL CONSULTANTS ALGONQUIN GAS TRANSMISSION COMPANY HANOVER NJ EMISSION COMPLIANCE PROGRAM

1114	01	02	03	04	05	06	07	08	09	10	11	12	13	14	15	16
100	CO		OXYGEN		NOX		CO2		CO		THC		STACK		MELS	
200	PPM		PERCENT		PPM		PERCENT		PPM		PPM C3		TEMP		TEMP	
07:32:00	4.4		18.4		50.0		1.8		-4.0	16.000	0.3		OPEN F		78.9F	
200	4.5		18.4		49.6		1.8		-3.6		0.1		OPEN		78.6	
300	4.7		17.7		31.2		1.1		-3.9		0.5		OURLD		78.6	
07:32:24	4.5		18.4		50.2		1.8		-2.0	4.0000	0.0		OPEN F		78.2F	
200	4.7		18.4		49.8		1.8		-3.5		0.0		OPEN		78.6	
300	4.7		17.7		31.2		1.1		-3.9		0.5		OURLD		78.6	
07:33:00	4.7		18.3		50.0		1.8		-2.0	16.000	0.1		OPEN F		77.9F	
200	4.7		18.3		49.9		1.8		-3.5		0.1		OPEN		78.4	
300	3.9		18.1		32.8		1.2		-3.9		0.5		OURLD		78.5	
07:34:00	4.3		18.4		51.0		1.8		-2.0	4.0000	-0.1		OPEN F		77.0F	
200	4.7		18.3		51.0		1.8		-3.0		0.0		OPEN		77.1	
300	3.8		18.5		34.5		1.3		-3.8		0.5		OURLD		78.5	
07:36:00	4.5		18.5		48.8		1.8		-4.0	16.000	-0.1		OPEN F		78.6F	
200	4.3		18.5		49.1		1.8		-3.1		0.0		OPEN		78.3	
300	3.7		19.1		36.1		1.3		-3.8		0.5		OURLD		78.4	
07:38:00	5.4		18.5		48.2		1.8		-4.0	16.000	-0.1		OPEN F		79.1F	
200	4.4		18.5		48.6		1.8		-3.3		0.0		OPEN		78.4	
300	3.9		19.0		37.7		1.4		-3.8		0.5		OURLD		78.4	
07:40:00	4.5		18.5		47.2		1.8		-2.0	4.0000	0.1		OPEN F		78.5F	
200	4.3		18.5		47.4		1.8		-3.0		0.0		OPEN		78.6	
300	4.1		18.9		39.3		1.4		-3.8		0.5		OURLD		78.4	
07:42:00	5.1		18.2		47.7		2.1		-4.0	16.000	0.0		OPEN F		77.3F	
200	4.4		18.4		47.5		1.8		-3.3		0.0		OPEN		78.4	
300	4.3		18.8		40.9		1.5		-3.8		0.1		OURLD		78.3	
07:44:00	6.2		17.6		63.0		2.2		-4.0	16.000	1.1		OPEN F		76.7F	
200	5.1		18.1		51.7		1.9		-3.4		0.1		OPEN		77.7	
300	4.5		18.7		43.0		1.6		-3.8		0.1		OURLD		78.2	
07:46:00	6.0		17.7		64.2		2.1		-2.0	4.0000	0.6		OPEN F		77.6F	
200	6.0		17.6		64.0		2.1		-42.6		1.2		OPEN		77.5	
300	4.7		18.6		45.1		1.6		-3.7		0.1		OURLD		78.1	

123 TRC ENVIRONMENTAL CONSULTANTS ALGONQUIN GAS TRANSMISSION COMPANY HANOVER NJ EMISSION CMPLIANCE PROGRAM

1114	01	02	03	04	05	06	07	08	09	10	11	12	13	14	15	16
100	CO		OXYGEN		NOX		CO2		CO		THC		STACK		MELS	
200	PPM		PERCENT		PPM		PERCENT		PPM		PPM C3		TEMP		TEMP	
07:48:00	5.7		18.0		59.0		2.0		-4.0	16.000	0.1		OPEN F		77.8F	
200	5.8		17.8		62.9		2.0		-23.1		0.8		OPEN		77.4	
300	4.9		18.5		47.1		1.7		-3.7		0.1		OURLD		78.2	
07:50:00	4.9		18.1		58.0		1.9		-4.0	16.000	0.2		OPEN F		76.6F	
200	5.2		18.0		59.8		1.9		-3.6		0.2		OPEN		76.8	
300	5.1		18.4		49.0		1.7		-3.7		0.1		OURLD		78.2	
07:52:00	5.5		18.2		52.5		2.0		-4.0	16.000	1.2		OPEN F		76.8F	
200	5.0		18.1		56.3		1.8		-3.5		0.5		OPEN		76.7	
300	5.3		18.3		50.8		1.8		-3.7		0.1		OURLD		78.2	

CEM PORT 2

07:54:00	7.0		17.3		70.0		2.4		-2.0	4.0000	0.3		OPEN F		76.6F	
200	5.7		17.9		58.1		2.0		-3.5		0.5		OPEN		76.7	
300	5.5		18.2		53.1		1.9		-3.7		0.1		OURLD		78.1	
07:56:00	7.2		17.3		73.5		2.4		-2.0	16.000	0.3		OPEN F		76.7F	
200	7.1		17.3		72.3		2.4		-3.1		0.2		OPEN		76.2	
300	5.8		18.0		55.5		1.9		-3.7		0.1		OURLD		78.1	
07:58:00	7.2		17.2		72.5		2.4		-4.0	16.000	0.2		OPEN F		77.4F	
200	7.1		17.2		72.4		2.4		-3.4		0.2		OPEN		76.6	
300	5.9		17.9		58.0		2.0		-3.7		0.1		OURLD		78.0	
08:00:00	7.0		17.3		72.5		2.4		-2.0	4.0000	-0.3		OPEN F		76.8F	
200	6.7		17.3		72.3		2.4		-3.3		0.1		OPEN		76.9	
300	5.8		17.9		58.4		2.0		-3.6		0.1		OURLD		77.9	
08:02:00	7.1		17.3		71.5		2.4		-4.0	4.0000	0.1		OPEN F		77.3F	
200	6.9		17.3		71.8		2.4		-2.8		0.1		OPEN		77.0	
300	5.7		17.9		58.7		2.0		-3.6		0.1		OURLD		77.9	
08:04:00	6.6		17.5		68.2		2.2		-4.0	16.000	0.1		OPEN F		76.6F	
200	6.8		17.3		71.2		2.3		-2.8		0.1		OPEN		76.9	
300	5.7		17.9		58.9		2.0		-3.6		0.1		OURLD		77.8	
08:06:00	6.4		17.5		68.8		2.2		-4.0	16.000	1.0		OPEN F		77.7F	
200	6.5		17.5		68.0		2.2		-3.0		0.3		OPEN		77.0	
300	5.6		17.9		59.0		2.0		-3.6		0.1		OURLD		77.8	

123 TRC ENVIRONMENTAL CONSULTANTS ALGONQUIN GAS TRANSMISSION COMPANY HANOVER NJ EMISSION COMPLIANCE PROGRAM

1114	01	02	03	04	05	06	07	08	09	10	11	12	13	14	15	16
100	CO		OXYGEN		NOX		CO2		CO		THC		STACK		MELS	
200	PPM		PERCENT		PPM		PERCENT		PPM		PPM C3		TEMP		TEMP	
08:08:00	-6.9		17.5		68.2		2.3		-2.0	16.000	0.2		OPEN F		77.8F	
200	6.7		17.5		68.3		2.2		-3.1		0.4		OPEN		77.3	
300	5.6		17.9		59.1		2.0		-3.6		0.1		OURLD		77.8	
08:10:00	-6.6		17.5		69.5		2.2		-4.0	16.000	0.9		OPEN F		76.7F	
200	6.5		17.5		69.1		2.2		-3.3		0.3		OPEN		76.8	
300	5.6		17.9		59.2		2.0		-3.6		0.2		OURLD		77.7	
08:12:00	7.8		18.0		63.8		2.0		-2.0	4.0000	0.5		OPEN F		77.9F	
200	6.5		17.6		67.3		2.1		-3.2		0.5		OPEN		77.3	
300	5.7		17.9		59.1		2.0		-3.5		0.2		OURLD		77.7	
08:14:00	6.8		17.5		68.0		2.3		-2.0	4.0000	1.1		OPEN F		78.1F	
200	6.5		17.6		67.0		2.1		-3.2		0.5		OPEN		77.5	
300	5.7		17.9		59.1		2.0		-3.4		0.2		OURLD		77.7	
08:16:00	6.7		17.5		68.8		2.2		-2.0	4.0000	0.7		OPEN F		78.2F	
200	6.9		17.5		67.8		2.2		-3.3		0.5		OPEN		78.0	
300	5.7		17.9		59.3		2.0		-3.4		0.2		OURLD		77.7	
08:18:00	6.9		17.5		69.0		2.2		-4.0	16.000	-4.3	FLAME OUT	OPEN F		78.1F	
200	6.8		17.5		68.5		2.2		-3.4		-1.1		OPEN		78.1	
300	5.8		17.8		59.9		2.0		-3.4		0.1		OURLD		77.7	
08:20:00	6.9		17.5		68.8		2.3		-4.0	16.000	1.3		OPEN F		78.3F	
200	6.5		17.5		68.4		2.2		-3.3		1.2		OPEN		78.4	
300	5.8		17.8		60.5		2.0		-3.4		0.1		OURLD		77.6	
08:22:00	7.8		17.4		72.2		2.3		-4.0	16.000	4.2		OPEN F		78.1F	
200	6.8		17.4		69.7		2.2		-3.2		2.4		OPEN		78.0	
300	6.0		17.8		61.2		2.0		-3.4		0.3		OURLD		77.6	
08:24:00	7.9		17.3		88.8		2.3		-4.0	16.000	0.3		OPEN F		78.7F	
200	7.1		17.4		74.3		2.2		-3.4		2.4		OPEN		78.2	
300	6.0		17.8		62.5		2.1		-3.4		0.3		OURLD		77.7	
08:26:00	14.3		17.5		82.5		2.2		-4.0	16.000	6.9		OPEN F		78.7F	
200	12.2		17.4		88.5		2.1		-3.8		4.9		OPEN		78.9	
300	6.4		17.7		63.5		2.1		-3.4		0.5		OURLD		77.7	

CEM PORT 3

123 TRC ENVIRONMENTAL CONSULTANTS ALGONQUIN GAS TRANSMISSION COMPANY HANOVER NJ EMISSION CMPLIANCE PROGRAM

1114	01	02	03	04	05	06	07	08	09	10	11	12	13	14	15	16
100	CO		OXYGEN		NOX		CO2		CO		THC		STACK		MELS	
200	PPM		PERCENT		PPM		PERCENT		PPM		PPM C3		TEMP		TEMP	
08:28:00	18.8		17.3		74.0		2.3		-4.0	16.000	19.9		OPEN F		78.9F	
200	13.8		17.4		82.5		2.2		-3.8		10.4		OPEN		78.9	
300	6.8		17.7		64.3		2.1		-3.4		1.2		OURLD		77.7	
08:30:00	31.0		17.2		75.2		2.3		-4.0	16.000	31.4		OPEN F		79.1F	
200	26.6		17.2		75.0		2.3		-3.6		28.0		OPEN		79.2	
300	7.7		17.7		65.2		2.1		-3.4		2.2		OURLD		77.7	
08:32:00	55.7		17.1		74.7		2.3		-4.0	16.000	54.6		OPEN F		79.5F	
200	37.9		17.1		74.8		2.3		-3.6		38.3		OPEN		79.2	
300	9.4		17.6		66.0		2.1		-3.4		4.0		OURLD		77.7	
08:34:00	67.3		17.1		75.7		2.4		-4.0	16.000	59.8		OPEN F		77.7F	
200	50.9		17.1		75.0		2.3		-3.7		45.6		OPEN		79.0	
300	11.5		17.6		66.8		2.1		-3.5		6.0		OURLD		77.8	
08:36:00	99.9		17.0		76.7		2.5		-4.0	16.000	79.1		OPEN F		75.0F	
200	83.0		17.0		75.8		2.4		-3.6		67.9		OPEN		77.5	
300	14.7		17.5		67.7		2.2		-3.5		8.7		OURLD		77.6	
08:37:36	42.6		17.0		77.2		2.5		-4.0	16.000	17.2		OPEN F		77.5F	
200	67.3		17.0		76.2		2.4		-3.9		61.6		OPEN		76.8	
300	14.7		17.5		67.7		2.2		-3.5		8.7		OURLD		77.6	
08:38:00	80.0		16.9		78.2		2.5		-4.0	16.000	7.6		OPEN F		78.0F	
200	65.8		16.9		76.4		2.4		-3.9		54.9		OPEN		76.9	
300	17.2		17.5		68.7		2.2		-3.5		8.9		OURLD		77.6	
08:40:00	42.7		17.0		76.0		2.5		-6.0	36.000	108.9		OPEN F		78.3F	
200	38.8		17.0		75.9		2.4		-3.3		81.1		OPEN		78.0	
300	18.5		17.4		69.7		2.2		-3.6		12.5		OURLD		77.6	
08:42:00	52.5		17.0		76.0		2.5		-2.0	4.0000	6.6		OPEN F		75.4F	
200	54.5		17.0		75.3		2.4		-3.4		32.9		OPEN		77.1	
300	20.1		17.4		70.6		2.2		-3.6		12.8		OURLD		77.5	
08:44:00	32.5		17.1		76.7		2.4		-4.0	16.000	36.3		OPEN F		78.1F	
200	49.3		17.0		76.0		2.4		-3.6		27.7		OPEN		77.7	
300	20.9		17.4		71.1		2.2		-3.6		13.9		OURLD		77.6	

end CEM T-1-2 2-1

end T-1½

disregard

RANGE 2

104 PPM

RANGE 3

RANGE 3

123 TRC ENVIRONMENTAL CONSULTANTS, ALGONQUIN GAS TRANSMISSION COMPANY HANOVER NJ EMISSION COMPLIANCE PROGRAM
1114

	01	02	03	04	05	06	07	08	09	10	11	12	13	14	15	16
100	CO		OXYGEN		NOX		CO2		CO		THC		STACK		NFLS	
200	PPM		PERCENT		PPM		PERCENT		PPM		PPM C3		TEMP		TEMP	
08:46:00	48.9		17.1		75.5		2.4		-4.0	16.000	24.0		OPEN F		78.1F	
200	53.9		17.1		75.8		2.4		-3.1		29.1		OPEN		77.8	
300	22.4		17.3		71.5		2.2		-3.6		14.7		DURLD		77.6	
08:48:00	36.6		17.3		75.2		2.3		-4.0	16.000	22.4		OPEN F		77.2F	
200	46.3		17.1		75.6		2.3		-3.0		26.9		OPEN		77.8	
300	23.4		17.3		72.0		2.3		-3.6		15.5		DURLD		77.6	
08:50:00	24.6		17.3		72.0		2.3		-4.0	16.000	15.2		OPEN F		77.1F	
200	27.4		17.3		72.4		2.3		-2.6		16.9		OPEN		77.2	
300	24.0		17.3		72.5		2.3		-3.6		16.0		DURLD		77.6	
08:52:00	29.0		19.9		60.2		0.5		-2.0	4.0000	11.9		OPEN F		76.6F	
200	23.7		17.6		72.3		1.9	OUT OF STACK	-2.4		14.9		OPEN		76.9	
300	24.8		17.4		72.7		2.2		-3.5		16.3		DURLD		77.6	
08:54:00	4.4		21.2		1.5		0.2		-2.0	4.0000	9.4		OPEN F		77.2F	
200	18.1		18.9		49.8		1.2		-2.3		13.0		OPEN		77.0	
300	24.7		17.5		70.4		2.1		-3.4		16.6		DURLD		77.6	
08:56:00	6.3		21.3		0.2		0.2		-2.0	4.0000	12.5		OPEN F		77.4F	
200	4.4		21.2		0.5		0.2		-3.0		10.3		OPEN		77.4	
300	24.7		17.6		68.0		2.1		-3.4		17.0		DURLD		77.6	
08:58:00	14.5		21.3		0.2		0.2		-4.0	16.000	17.5		OPEN F		78.3F	
200	7.2		21.2		0.3		0.2		-3.1		13.3		OPEN		77.5	
300	25.0		17.7		65.6		2.0		-3.4		17.6		DURLD		77.6	
09:03:18	-0.7 SYSTEM ZERO		0.2		0.0		0.1		-2.0	4.0000	2.5		OPEN F		77.3F	
200	[illegible]		10.5		[illegible]		[illegible]		-2.8		[illegible]		OPEN		77.7	
300	24.9		17.3		60.8		1.8		-3.4		18.1		DURLD		77.7	
09:07:42	-0.6		22.3 SYSTEM SPAD		0.0		0.1		-2.0	4.0000	0.0 SYSTEM ZERO		OPEN F		78.2F	
200	-0.6		[illegible]		0.0		0.1		-2.9		[illegible]		OPEN		78.0	
300	24.4		16.6		56.2		1.7		-3.2		18.1		DURLD		77.7	
09:11:36	-1.3		0.0		0.2		12.0 SYSTEM SPAD		-2.0	4.0000	0.9		OPEN F		77.7F	
200	-1.0		10.7		0.1		[illegible]		-2.8		0.9		OPEN		77.8	
300	23.9		16.8		51.6		1.8		-3.2		18.1		DURLD		77.8	

TEST 2-1 COMPLETE

123 TRC ENVIRONMENTAL CONSULTANTS ALGONQUIN GAS TRANSMISSION COMPANY HANOVER N.J EMISSION COMPLIANCE PROGRAM
1114 01 02 03 04 05 06 07 08 09 10 11 12 13 14 15 16

100 200	CO PPM	OXYGEN PERCENT	NOX PPM	CO2 PERCENT	CO PPM		THC PPM C3	STACK TEMP	MFLS TEMP
09:17:07	-0.3	-0.1	134.2 SYSTEM SPAN	0.2	-4.0	16.000	0.7	OPEN F	78.3F
200	-0.6	0.0	[illegible]	0.4	-3.0		0.7	OPEN	78.5
300	23.1	15.0	51.8	2.1	-3.3		18.1	DURLD	77.8
09:22:45	7.2 SYSTEM SPAN	0.0	0.2	0.1	-2.0	4.0000	0.3	OPEN F	78.6F
200	0.4	0.0	35.7	0.1	-2.7		0.4	OPEN	78.0
300	22.8	13.3	51.4	1.9	-3.2		18.1	DURLD	77.8
09:30:08	-0.6	21.4	0.0	0.1	-2.0	4.0000	18.3 9.67 SYSTEM SPAN	OPEN F	78.2F
200	-0.7	21.4	-0.1	0.1	-2.6		[illegible]	OPEN	77.7
300	20.6	13.1	40.7	1.6	-3.1		16.7	DURLD	77.6

IN THE STACK

09:48:00	10.0	18.3	47.7	1.9	-2.0	4.0000	0.8	OPEN F	78.3F
200	7.6	19.3	25.3	1.4	-2.4		1.2	OPEN	78.4
300	3.9	14.2	20.4	1.0	-2.8		3.6	DURLD	77.9

~~TEST 2-2 START 1650~~ SBM

09:50:00	10.0	18.3	46.7	1.9	-4.0	16.000	0.8	OPEN F	78.8F
200	10.2	18.3	46.8	1.9	-2.6		0.8	OPEN	78.5
300	3.4	14.3	19.6	1.0	-2.8		3.1	DURLD	78.0
09:52:00	8.5	17.8	45.2	2.4	-2.0	4.0000	0.3	OPEN F	78.5F
200	9.8	18.2	46.2	1.9	-2.5		0.6	OPEN	78.3
300	2.7	14.2	19.1	1.1	-2.8		2.7	DURLD	78.0
09:53:00	7.7	17.2	68.8	2.5	-2.0	4.0000	0.3	OPEN F	78.6F
200	9.3	18.0	48.4	2.0	-2.7		0.6	OPEN	78.3
300	2.8	14.0	21.3	1.1	-2.8		2.4	DURLD	78.1

TEST 2-2 START 0955 CEM PORT 4

09:55:00	7.2	17.1	74.7	2.5	-4.0	16.000	0.3	OPEN F	78.5F
200	7.1	17.1	73.5	2.5	-2.6		0.3	OPEN	78.4
300	2.9	13.9	23.8	1.2	-2.9		2.0	DURLD	78.1
09:57:00	7.3	17.1	74.0	2.5	-2.0	4.0000	0.2	OPEN F	78.5F
200	7.1	17.1	73.6	2.5	-2.5		0.3	OPEN	78.4
300	2.6	13.8	26.3	1.3	-2.8		1.4	DURLD	78.1
09:59:00	7.6	17.1	73.0	2.5	-2.0	4.0000	0.2	OPEN F	78.8F
200	7.1	17.1	73.1	2.5	-2.6		0.4	OPEN	78.6
300	2.5	13.6	28.7	1.4	-2.8		1.1	DURLD	78.1

123 TRC ENVIRONMENTAL CONSULTANTS ALGONQUIN GAS TRANSMISSION COMPANY HANOVER N.J. EMISSION COMPLIANCE PROGRAM

1114	01	02	03	04	05	06	07	08	09	10	11	12	13	14	15	16
100	CO		OXYGEN		NOX		CO2		CO		THC		STACK		NFLS	
200	PPM		PERCENT		PPM		PERCENT		PPM		PPM C3		TEMP		TEMP	
10:01:00	6.8		17.2		73.5		2.5		-2.0	4.0000	0.1		OPEN F		78.9F	
200	7.0		17.1		73.2		2.5		-2.4		0.3		OPEN		78.8	
300	2.7		14.2		31.1		1.5		-2.8		1.0		DURI D		78.2	
10:03:00	6.9		17.2		73.2		2.5		-2.0	4.0000	0.1		OPEN F		79.1F	
200	7.0		17.1		73.2		2.5		-2.4		0.2		OPEN		78.8	
300	3.0		14.7		33.6		1.5		-2.8		0.9		DURI D		78.2	
10:05:00	7.1		17.2		72.7		2.5		-2.0	4.0000	0.3		OPEN F		79.9F	
200	6.9		17.2		72.6		2.5		-2.8		0.2		OPEN		79.6	
300	3.2		14.9		36.0		1.6		-2.8		0.9		DURI D		78.3	
10:07:00	6.1		17.2		74.5		2.5		-2.0	4.0000	0.4		OPEN F		78.7F	
200	6.9		17.2		73.0		2.5		-2.4		0.3		OPEN		79.6	
300	3.5		14.7		38.5	PORT 3	1.7		-2.8		1.0		DURI D		78.3	
10:09:00	7.3		17.2		74.2		2.5		-2.0	4.0000	0.2		OPEN F		78.7F	
200	6.9		17.1		73.8		2.5		-2.3		0.3		OPEN		78.8	
300	3.7		14.7		41.0		1.5		-2.8		0.9		DURI D		78.4	
10:11:00	6.7		17.2		75.0		2.5		-2.0	4.0000	0.5		OPEN F		78.6F	
200	6.7		17.1		74.0		2.5		-2.3		0.2		OPEN		78.7	
300	4.0		15.2		43.5	PORT 3	1.2		-2.8		0.9		DURI D		78.4	
10:13:00	6.8		17.1		74.7		2.5		-4.0	16.000	0.2		OPEN F		79.2F	
200	6.8		17.1		74.2		2.5		-2.7		0.2		OPEN		78.8	
300	4.3		15.8		43.5		1.2		-2.8		0.9		DURI D		78.4	
10:15:00	6.5		17.1		74.0		2.5		-4.0	16.000	0.6		OPEN F		80.3F	
200	6.5		17.1		74.1		2.5		-3.6		0.1		OPEN		80.0	
300	4.5		16.4		41.6		1.3		-2.8		0.9		DURI D		78.5	
10:17:00	10.7		18.3		31.3	OUTSTACK	2.3		-2.0	4.0000	0.9		OPEN F		80.0F	
200	7.7		17.7		66.8		2.1		-3.7		1.4		OPEN		80.0	
300	4.9		17.0		38.2		1.4		-2.8		0.9		DURI D		78.5	
10:19:00	7.6		17.1		76.5	PORT 3	2.5		-4.0	16.000	0.3		OPEN F		79.6F	
200	7.7		17.1		76.4		2.5		-3.6		0.4		OPEN		79.7	
300	4.9		17.6		38.6		1.4		-2.8		0.9		DURI D		78.6	

123 TRC ENVIRONMENTAL CONSULTANTS ALGONQUIN GAS TRANSMISSION COMPANY HANOVER NJ EMISSION COMPLIANCE PROGRAM

1114	01	02	03	04	05	06	07	08	09	10	11	12	13	14	15	16
100	CO		OXYGEN		NOX		CO2		CO		THC		STACK		NFLS	
200	PPM		PERCENT		PPM		PERCENT		PPM		PPM C3		TEMP		TEMP	
10:21:00	6.4		17.1		76.5		2.5		-2.0	4.0000	0.6		OPEN F		79.6F	
200	7.0		17.1		76.9		2.5		-3.1		0.2		OPEN		79.6	
300	4.9		18.1		41.2		1.5		-2.7		0.9		OURLD		78.6	
10:23:00	6.4		17.1		75.2		2.5		-4.0	16.000	0.1		OPEN F		80.3F	
200	6.8		17.1		76.3		2.5		-3.0		0.2		OPEN		79.7	
300	4.9		18.7		43.7		1.6		-2.6		0.9		OURLD		78.7	
10:25:00	6.6		17.1		74.0		2.5		-4.0	16.000	0.0		OPEN F		79.3F	
200	6.5		17.1		74.7		2.5		-3.0		0.0		OPEN		79.8	
300	5.1		18.6		46.1		1.7		-2.6		0.8		OURLD		78.8	
10:27:00	6.5		17.1		74.7		2.5		-2.0	4.0000	-0.1		OPEN F		79.8F	
200	6.5		17.1		74.6		2.5		-2.7		0.0		OPEN		79.8	
300	5.4		18.4		48.6		1.8		-2.6		0.8		OURLD		78.9	
10:29:00	6.3		17.1		73.8		2.5		-4.0	4.0000	0.0		OPEN F		78.7F	
200	6.3		17.1		74.5		2.5		-2.0		0.0		OPEN		78.5	
300	5.6		18.3		51.1		1.8		-2.6		0.4		OURLD		78.9	
10:31:00	7.0		17.1		72.2		2.5		-2.0	4.0000	-0.1		OPEN F		79.9F	
200	6.4		17.1		73.1		2.5		-2.4		0.0		OPEN		79.1	
300	5.8		18.1		53.5		1.9		-2.6		0.4		OURLD		78.9	
10:33:00	6.6		17.1		72.7		2.5		-2.0	16.000	0.1		OPEN F		78.6F	
200	6.4		17.1		72.7		2.5		-2.6		0.0		OPEN		78.8	
300	6.1		18.0		55.9		2.0		-2.6		0.4		OURLD		78.9	
10:35:00	6.5		17.1		71.7		2.5		-4.0	4.0000	0.0		OPEN F		77.3F	
200	6.3		17.1		72.4		2.5		-2.6		0.0		OPEN		78.3	
300	6.3		17.8		58.3		2.1		-2.6		0.3		OURLD		78.9	
10:37:00	6.4		17.1		73.8		2.5		-2.0	4.0000	-0.2		OPEN F		77.6F	
200	6.4		17.1		72.3		2.5		-2.6		-0.1		OPEN		77.6	
300	6.6		17.7		60.8		2.1		-2.6		0.3		OURLD		78.9	
10:39:00	9.9		19.5		54.2		1.8		-4.0	16.000	0.6		OPEN F		[illegible]	
200	7.7		18.2		69.4		1.5		-2.6		2.5		OPEN		78.0	
300	6.9		17.6		62.7		2.2		-2.6		0.3		OURLD		78.9	

OUT OF STACK

NEW PART 2

123 TRC ENVIRONMENTAL CONSULTANTS ALGONQUIN GAS TRANSMISSION COMPANY HANOVER NJ EMISSION COMPLIANCE PROGRAM

1114	01	02	03	04	05	06	07	08	09	10	11	12	13	14	15	16
100	CO		OXYGEN		NOX		CO2		CO		THC		STACK		MFLS	
200	PPM		PERCENT		PPM		PERCENT		PPM		PPM C3		TEMP		TEMP	
10:41:00	6.7		17.2		76.7		2.5		-2.0	4.0000	0.1		OPEN F		79.0F	
200	8.4		17.8		64.3		2.1		-2.8		0.8		OPEN		78.3	
300	7.2		17.5		65.2		2.3		-2.6		0.3		OURLD		78.9	
10:43:00	6.6		17.1		74.2		2.5		-2.0	4.0000	-0.2		OPEN F		78.0F	
200	7.7		17.5		68.3		2.2		-2.9		0.4		OPEN		78.4	
300	7.4		17.4		67.7		2.4		-2.6		0.2		OURLD		78.9	
10:45:00	6.9		17.1		72.0		2.5		-2.0	4.0000	-0.2		OPEN F		79.2F	
200	6.6		17.1		72.6		2.5		-2.6		-0.1		OPEN		79.1	
300	7.3		17.3		69.1		2.4		-2.6		0.2		OURLD		78.9	
10:47:00	6.8		17.1		72.2		2.5		-4.0	16.000	-0.2		OPEN F		78.6F	
200	6.6		17.1		72.4		2.5		-2.8		-0.1		OPEN		79.0	
300	7.2		17.3		69.9		2.4		-2.6		0.1		OURLD		78.9	
10:49:00	7.8		17.1		71.0		2.5		-2.0	4.0000	-0.2		OPEN F		76.2F	
200	6.8		17.1		71.4		2.5		-3.3		-0.2		OPEN		77.9	
300	7.1		17.2		70.7		2.4		-2.5		0.1		OURLD		78.8	
10:51:00	6.5		17.1		72.2		2.5		-4.0	16.000	-0.4		OPEN F		76.6F	
200	6.6		17.1		71.5		2.5		-3.2		-0.3		OPEN		76.4	
300	7.0		17.2		71.6		2.4		-2.6		0.1		OURLD		78.7	
10:53:00	6.3		17.1		72.5		2.5		-4.0	16.000	-0.6		OPEN F		79.5F	
200	6.5		17.1		72.1		2.5		-3.2		-0.3		OPEN		77.2	
300	7.0		17.2		71.7		2.4		-2.6		0.1		OURLD		78.8	
10:55:00	6.3		17.1		71.5		2.5		-2.0	4.0000	-0.4		OPEN F		79.0F	
200	6.2		17.1		72.1		2.5		-3.1		-0.3		OPEN		79.2	
300	7.0		17.2		71.6		2.4		-2.6		0.0		OURLD		78.8	
10:57:00	6.5		17.1		71.5		2.5		-4.0	16.000	-0.4		OPEN F		77.9F	
200	6.3		17.1		71.8		2.5		-3.3		-0.3		OPEN		78.9	
300	6.9		17.2		71.5		2.4		-2.6		0.0		OURLD		78.8	
10:59:00	6.0		17.1		71.5		2.5		-4.0	16.000	-0.4		OPEN F		78.2F	
200	6.3		17.1		71.5		2.5		-2.6		-0.3		OPEN		78.3	
300	6.9		17.2		71.5		2.4		-2.7		0.0		OURLD		78.8	

TRC ENVIRONMENTAL CONSULTANTS ALGONQUIN GAS TRANSMISSION COMPANY HANOVER NJ EMISSION COMPLIANCE PROGRAM

123 1114 100 200	01 CO PPM	02	03 OXYGEN PERCENT	04	05 NOX PPM	06	07 CO2 PERCENT	08	09 CO PPM	10	11 THC PPM C3	12	13 STACK TEMP	14	15 MFLS TEMP	16
11:01:00	6.5		17.1		67.0		2.5		-2.0	4.0000	-0.2		OPEN F		78.4F	
200	6.3		17.1		70.8		2.5		-3.2		-0.3		OPEN		78.5	
300	6.9		17.2		71.3		2.4		-2.7		0.0		DURLD		78.7	
11:03:00	6.5		17.1		66.5		2.5		-4.0	16.000	-0.4		OPEN F		78.5F	
200	6.5		17.1		69.2		2.5		-3.2		-0.3		OPEN		78.4	
300	6.8		17.2		71.0		2.4		-2.8		0.0		DURLD		78.7	

CEM PORT 1

11:05:00	7.1		17.4		60.7		2.5		-2.0	4.0000	0.1		OPEN F		78.4F	
200	6.8		17.2		65.8		2.3		-3.1		-0.1		OPEN		78.3	
300	6.8		17.2		70.6		2.4		-2.8		0.0		DURLD		78.7	
11:07:00	6.2		17.1		71.7		2.5		-2.0	4.0000	-0.5		OPEN F		79.2F	
200	6.6		17.2		67.4		2.4		-3.2		-0.3		OPEN		78.5	
300	6.9		17.2		70.5		2.4		-2.8		0.0		DURLD		78.7	
11:09:00	6.8		17.1		70.5		2.5		-4.0	16.000	-0.1		OPEN F		78.9F	
200	6.5		17.1		71.0		2.5		-3.3		-0.2		OPEN		78.9	
300	6.8		17.2		70.4		2.4		-2.8		0.0		DURLD		78.7	
11:11:00	6.5		17.1		70.0		2.5		-4.0	16.000	-0.3		OPEN F		79.2F	
200	6.5		17.1		70.8		2.5		-3.2		-0.2		OPEN		79.0	
300	6.8		17.2		70.3		2.4		-2.9		0.0		DURLD		78.7	
11:13:00	6.9		17.1		71.5		2.5		-4.0	16.000	-0.4		OPEN F		79.7F	
200	6.6		17.1		71.0		2.5		-3.3		-0.2		OPEN		79.2	
300	6.8		17.2		70.1		2.4		-2.9		0.0		DURLD		78.7	
11:15:00	6.4		17.1		70.2		2.5		-4.0	16.000	-0.4		OPEN F		79.6F	
200	6.5		17.1		70.8		2.5		-3.1		-0.3		OPEN		79.7	
300	6.8		17.2		70.0		2.4		-2.9		-0.1		DURLD		78.7	
11:17:00	6.2		17.1		70.5		2.5		-4.0	16.000	-0.4		OPEN F		80.0F	
200	6.4		17.1		70.7		2.5		-3.4		-0.3		OPEN		79.8	
300	6.7		17.1		71.3		2.4		-3.0		-0.1		DURLD		78.7	
11:19:00	6.6		17.1		70.7		2.5		-4.0	16.000	-0.5		OPEN F		79.4F	
200	6.4		17.1		70.5		2.5		-3.6		-0.4		OPEN		78.7	
300	6.6		17.1		71.1		2.4		-3.0		-0.1		DURLD		78.7	

TRC ENVIRONMENTAL CONSULTANTS ALGONQUIN GAS TRANSMISSION COMPANY HANOVER N.J EMISSION COMPLIANCE PROGRAM

123 1114 100 200	01 CO PPM	02	03 OXYGEN PERCENT	04	05 NOX PPM	06	07 CO2 PERCENT	08	09 CO PPM	10	11 THC PPM C3	12	13 STACK TEMP	14	15 MFLS TEMP	16
11:21:00	6.5		17.1		70.5		2.5		-2.0	4.0000	-0.4		OPEN F		79.1F	
200	6.3		17.1		70.4		2.5		-3.6		-0.3		OPEN		79.3	
300	6.6		17.1		70.9		2.4		-3.0		-0.2		DURLD		78.7	
END TEST 2-2																
11:28:00	-0.5		0.0		0.5		0.1		-2.0	4.0000	0.6		OPEN F		79.6F	
200	0.1		1.6		12.9		0.2		-3.5		0.4		OPEN		79.7	
300	6.2		16.0		66.1		2.2		-3.1		-0.1		DURLD		78.7	
11:28:31	-0.5		0.0		0.5		0.1		-4.0	16.000	0.5		OPEN F		79.5F	
200	-0.5		0.0		0.2		0.1		-4.0		0.5		OPEN		79.5	
300	6.2		16.0		66.1		2.2		-3.1		-0.1		DURLD		78.7	
11:28:51	-0.5		0.0 SYSTEM ZERO		0.2		0.1		-4.0	16.000	0.5		OPEN F		79.4F	
200	-0.5		0.0		0.2		0.1		-3.6		0.5		OPEN		79.5	
300	6.2		16.0		66.1		2.2		-3.1		-0.1		DURLD		78.7	
11:47:09	-0.2		22.1 SYSTEM SPAN		4.5		0.1		-4.0	16.000	-0.3		OPEN F		80.9F	
200	-0.1				91.0		0.1		-3.9		0.0		OPEN		80.5	
300	3.7		11.0		71.6		1.5		-3.4		0.1		DURLD		79.0	
11:50:47	-1.3		0.1		0.5		12.0 SYSTEM SPAN		-4.0	16.000	0.8		OPEN F		80.7F	
200	-0.9		11.7		0.4		7.7		-3.8		0.5		OPEN		80.6	
300	3.5		11.1		69.3		1.5		-3.5		0.1		DURLD		79.2	
11:59:27	-0.1		0.0		134.7 SYSTEM SPAN		0.1		-4.0	16.000	0.5		OPEN F		81.0F	
200	-0.2		0.0		130.6		0.1		-4.0		1.0		OPEN		80.7	
300	2.3		8.4		70.8		1.6		-3.6		0.4		DURLD		79.5	
12:02:18	7.2 SYSTEM SPAN		0.1		36.5		0.1		-4.0	16.000	1.0		OPEN F		81.5F	
200	1.0		0.1		123.2		0.1		-4.0		0.9		OPEN		81.0	
300	2.1		7.8		72.7		1.5		-3.6		0.4		DURLD		79.7	
12:08:04	-0.3		21.5		0.5		0.1		-4.0	16.000	11.7 SYSTEM SPAN		OPEN F		81.2F	
200	-0.5		21.5		0.5		0.1		-4.0		11.7		OPEN		81.0	
300	1.9		6.9		66.3		1.3		-3.8		0.9		DURLD		79.9	
START 1222 TEST 2-3 CEM PART 4																
12:22:00	6.7		17.1		77.5		2.5		-2.0	4.0000	-0.3		OPEN F		77.9F	
200	8.5		17.8		54.8		2.1		-3.5		-0.1		OPEN		77.3	
300	1.4		7.5		55.5		1.0		-3.8		1.0		DURLD		79.9	

TRC ENVIRONMENTAL CONSULTANTS ALGONQUIN GAS TRANSMISSION COMPANY HANOVER N.J. EMISSION COMPLIANCE PROGRAM

123 1114 100 200	01 CO PPM	02	03 OXYGEN PERCENT	04	05 NOX PPM	06	07 CO2 PERCENT	08	09 CO PPM	10	11 THC PPM C3	12	13 STACK TEMP	14	15 MFLS TEMP	16
12:24:00	6.8		17.1		78.8		2.6		-4.0	16.000	-0.4		OPEN F		79.9F	
200	6.6		17.1		78.3		2.5		-3.8		-0.4		OPEN		78.9	
300	1.7		8.0		57.8		1.1		-3.8		1.0		OURLD		79.9	
12:26:00	6.6		17.1		77.0		2.5		-4.0	16.000	-0.3		OPEN F		79.4F	
200	6.5		17.1		78.2		2.5		-3.9		-0.4		OPEN		79.5	
300	1.9		8.6		60.4		1.2		-3.8		1.0		OURLD		79.9	
12:28:00	6.4		17.1		76.7		2.5		-4.0	16.000	-0.6		OPEN F		79.8F	
200	6.5		17.1		76.7		2.5		-4.0		-0.4		OPEN		79.8	
300	2.2		9.2		62.9		1.3		-3.8		1.0		OURLD		79.9	
12:30:00	6.5		17.1		77.2		2.5		-4.0	16.000	-0.4		OPEN F		79.1F	
200	6.4		17.1		76.8		2.5		-4.0		-0.3		OPEN		79.5	
300	2.4		9.7		65.5		1.3		-3.8		0.9		OURLD		79.9	
12:32:00	6.7		17.1		76.5		2.5		-4.0	16.000	-0.4		OPEN F		79.4F	
200	6.5		17.1		77.0		2.5		-4.0		-0.3		OPEN		79.4	
300	2.6		10.3		64.0		1.4		-3.8		0.9		OURLD		79.9	
12:34:00	6.6		17.2		75.5		2.5		-4.0	16.000	-0.3		OPEN F		80.6F	
200	6.5		17.1		76.1		2.5		-4.0		-0.4		OPEN		80.1	
300	2.9		10.9		62.4		1.5		-3.8		0.9		OURLD		79.9	
12:36:00	6.6		17.2		75.2		2.5		-4.0	16.000	-0.4		OPEN F		80.5F	
200	6.6		17.1		75.8		2.5		-3.9		-0.3		OPEN		80.2	
300	3.1		11.5		60.7		1.6		-3.8		0.8		OURLD		80.0	
12:38:00	6.8		17.2		75.0		2.5		-4.0	16.000	-0.3		OPEN F		80.4F	
200	6.7		17.2		75.3		2.5		-4.3		-0.1		OPEN		80.5	
300	3.3		12.0		58.9		1.7		-3.9		0.8		OURLD		80.1	
12:40:00	6.4		17.2		76.3		2.5		-2.0	4.0000	-0.1		OPEN F		77.2F	
200	6.6		17.2		75.2		2.5		-4.0		-0.2		OPEN		79.8	
300	3.6		12.6		57.3		1.7		-3.8		0.8		OURLD		80.0	
12:42:00	6.1		17.9		76.5		2.3		-4.0	16.000	-0.2		OPEN F		80.1F	
200	6.5		17.2		75.8		2.4		-3.8		-0.2		OPEN		79.5	
300	3.8		13.2		55.6		1.8		-3.8		0.6		OURLD		80.0	

TRC ENVIRONMENTAL CONSULTANTS ALGONQUIN GAS TRANSMISSION COMPANY HANOVER NJ EMISSION COMPLIANCE PROGRAM

123 1114 100 200	01 CO PPM	02	03 OXYGEN PERCENT	04	05 NOX PPM	06	07 CO2 PERCENT	08	09 CO PPM	10	11 THC PPM C3	12	13 STACK TEMP	14	15 MELS TEMP	16
12:44:00	6.8		17.1		78.0		2.5		-4.0	16.000	-0.3		OPEN F		80.4F	
200	6.7		17.3		74.0		2.4		-3.8		-0.1		OPEN		79.9	
300	4.0		13.8		54.1		1.9		-3.8		0.6		OURLD		80.0	
CEM PORT 3																
12:46:00	6.3		17.1		77.0		2.5		-4.0	16.000	-0.2		OPEN F		80.3F	
200	6.6		17.2		75.5		2.4		-3.8		-0.1		OPEN		80.1	
300	4.2		13.6		56.5		2.0		-3.8		0.6		OURLD		80.0	
12:48:00	6.7		17.1		76.0		2.5		-4.0	16.000	-0.2		OPEN F		80.6F	
200	6.5		17.1		76.2		2.5		-4.0		-0.1		OPEN		80.4	
300	4.4		13.4		59.0		1.9		-3.8		0.5		OURLD		80.0	
12:50:00	6.3		17.1		75.2		2.5		-4.0	16.000	0.1		OPEN F		80.5F	
200	6.5		17.1		75.7		2.5		-3.8		-0.2		OPEN		80.7	
300	4.7		14.0		61.5		1.6		-3.8		0.5		OURLD		80.0	
12:52:00	7.3		17.1		74.0		2.5		-4.0	16.000	0.0		OPEN F		80.7F	
200	6.6		17.1		75.2		2.5		-3.8		-0.1		OPEN		80.6	
300	5.0		14.5		63.3		1.6		-3.8		0.5		OURLD		80.0	
12:54:00	6.3		17.1		72.7		2.5		-4.0	16.000	-0.8		OPEN F		81.1F	
200	6.6		17.1		73.5		2.5		-3.6		-0.2		OPEN		81.1	
300	5.2		15.0		61.7		1.7		-3.8		0.4		OURLD		80.0	
12:56:00	6.4		17.1		73.8		2.5		-4.0	16.000	0.2		OPEN F		80.3F	
200	6.5		17.1		73.5		2.5		-3.5		-0.1		OPEN		80.9	
300	5.4		15.6		59.8		1.8		-3.8		0.4		OURLD		80.0	
12:58:00	6.8		17.1		73.5		2.5		-2.0	4.0000	-0.2		OPEN F		80.9F	
200	6.8		17.1		73.3		2.5		-3.0		-0.1		OPEN		80.9	
300	5.7		16.2		57.8		1.8		-3.8		0.3		OURLD		80.0	
13:00:00	6.5		17.1		73.2		2.5		-4.0	16.000	-0.2		OPEN F		79.4F	
200	6.7		17.1		73.4		2.5		-3.1		-0.1		OPEN		80.3	
300	5.9		16.7		56.1		1.9		-3.8		0.3		OURLD		79.9	
13:02:00	6.7		17.1		74.2		2.5		-2.0	4.0000	-0.1		OPEN F		80.3F	
200	6.6		17.1		73.5		2.5		-3.1		0.0		OPEN		79.9	
300	5.9		17.3		58.4		2.0		-3.7		0.3		OURLD		79.9	

TRC ENVIRONMENTAL CONSULTANTS ALGONQUIN GAS TRANSMISSION COMPANY HANOVER NJ EMISSION COMPLIANCE PROGRAM

123 1114 100 200	01 CO PPM	02	03 OXYGEN PERCENT	04	05 NOX PPM	06	07 CO2 PERCENT	08	09 CO PPM	10	11 THC PPM C3	12	13 STACK TEMP	14	15 MELS TEMP	16
13:04:00	6.3		17.1		73.2		2.5		-4.0	4.0000	-0.1		OPEN F		81.4F	
200	6.5		17.1		73.3		2.5		-3.1		-0.1		OPEN		81.0	
300	5.8		17.8		60.8		2.1		-3.6		0.2		OVRLD		79.9	
13:06:00	35.6	DISREGARD	17.8		49.2	DISREGARD	2.4		-4.0	4.0000	1.6		OPEN F		81.7F	
200	12.4		17.3		71.0		2.3		-3.1		1.9		OPEN		81.4	
300	7.1		17.7		62.5		2.1		-3.6		0.0		OVRLD		80.0	
							CEM PORT 2									
13:08:00	7.8		17.1		76.0		2.5		-2.0	4.0000	0.5		OPEN F		81.8F	
200	9.0		17.1		75.4		2.5		-2.6		0.4		OPEN		81.5	
300	7.3		17.6		65.0		2.2		-3.5		0.0		OVRLD		80.0	
13:10:00	6.8		17.1		73.0		2.5		-4.0	4.0000	0.0		OPEN F		80.5F	
200	8.1		17.1		73.8		2.5		-2.6		0.2		OPEN		81.3	
300	7.6		17.4		67.4		2.3		-3.4		0.0		OVRLD		80.0	
13:12:00	6.7		17.1		69.5		2.5		-2.0	36.000	0.0		OPEN F		82.5F	
200	7.5		17.1		72.1		2.5		-2.9		0.2		OPEN		81.6	
300	7.8		17.3		69.7		2.4		-3.5		-0.1		OVRLD		80.1	
13:14:00	6.6		17.1		70.0		2.5		-2.0	4.0000	0.1		OPEN F		81.7F	
200	6.5		17.1		69.3		2.5		-2.3		0.0		OPEN		82.0	
300	7.8		17.2		71.9		2.4		-3.4		0.0		OVRLD		80.1	
13:16:00	6.4		17.1		66.3		2.5		-4.0	16.000	0.0		OPEN F		82.8F	
200	6.5		17.1		68.7		2.5		-2.5		0.0		OPEN		81.9	
300	7.6		17.2		72.5		2.4		-3.4		0.0		OVRLD		80.2	
13:18:00	6.7		17.1		67.7		2.5		-2.0	4.0000	0.7		OPEN F		82.2F	
200	6.7		17.1		67.9		2.5		-2.6		0.3		OPEN		82.5	
300	7.6		17.1		73.2		2.4		-3.4		0.0		OVRLD		80.3	
13:20:00	6.5		17.1		64.5		2.5		-4.0	16.000	0.0		OPEN F		83.6F	
200	6.8		17.1		66.3		2.5		-3.1		0.1		OPEN		82.8	
300	7.5		17.1		73.3		2.4		-3.4		0.0		OVRLD		80.5	
13:22:00	6.4		17.1		66.5		2.5		-4.0	16.000	0.1		OPEN F		82.9F	
200	6.6		17.1		66.1		2.5		-3.2		0.0		OPEN		82.7	
300	7.5		17.1		72.9		2.4		-3.4		0.0		OVRLD		80.7	

123 TRC ENVIRONMENTAL CONSULTANTS ALGONQUIN GAS TRANSMISSION COMPANY HANOVER NJ EMISSION CMPLIANCE PROGRAM

1114	01	02	03	04	05	06	07	08	09	10	11	12	13	14	15	16
100	CO		OXYGEN		NOX		CO2		CO		THC		STACK		MELS	
200	PPM		PERCENT		PPM		PERCENT		PPM		PPM C3		TEMP		TEMP	
13:24:00	6.6		17.1		66.5		2.5		-4.0	16.000	0.1		OPEN F		83.5F	
200	6.4		17.1		66.3		2.5		-3.6		0.1		OPEN		82.7	
300	7.5		17.1		72.5		2.4		-3.4		0.0		OVRLD		80.8	
13:26:00	6.6		17.1		66.3		2.5		-4.0	16.000	0.1		OPEN F		83.8F	
200	6.5		17.1		66.5		2.5		-3.5		0.1		OPEN		83.1	
300	7.5		17.1		72.1		2.4		-3.4		0.0		OVRLD		81.0	
13:28:00	6.7		17.1		67.7		2.5		-4.0	16.000	0.4		OPEN F		82.5F	
200	6.4		17.1		67.2		2.5		-4.0		0.3		OPEN		81.8	
300	7.5		17.1		71.8		2.4		-3.4		0.0		OVRLD		81.0	
13:30:00	6.8		17.4		64.7		2.5		-4.0	16.000	0.3		OPEN F		83.2F	
200	6.6		17.1		67.4		2.4		-3.8		0.5		OPEN		82.7	
300	7.5		17.1		71.4		2.4		-3.4		0.0		OVRLD		81.2	
13:32:00	6.2		17.1		68.2		2.5		-4.0	16.000	0.2		OPEN F		83.1F	
200	6.5		17.1		67.2		2.4		-4.0		0.4		OPEN		82.9	
300	7.5		17.1		71.1		2.4		-3.4		0.0		OVRLD		81.3	
13:34:00	6.3		17.1		67.2		2.5		-4.0	16.000	0.1		OPEN F		82.8F	
200	6.2		17.1		67.7		2.5		-3.6		0.2		OPEN		83.1	
300	7.5		17.1		70.8		2.4		-3.4		0.0		OVRLD		81.4	
13:36:00	6.4		17.1		66.5		2.5		-4.0	16.000	0.3		OPEN F		83.7F	
200	6.3		17.1		67.3		2.5		-3.7		0.2		OPEN		83.3	
300	7.5		17.1		70.5		2.4		-3.4		0.0		OVRLD		81.5	
13:38:00	6.3		17.1		66.5		2.5		-4.0	16.000	0.2		OPEN F		82.7F	
200	6.3		17.1		66.5		2.5		-4.0		0.2		OPEN		82.3	
300	7.5		17.1		70.3		2.4		-3.4		0.0		OVRLD		81.6	
13:40:00	6.2		17.1		66.7		2.5		-4.0	16.000	0.3		OPEN F		83.2F	
200	6.3		17.1		66.6		2.5		-4.0		0.2		OPEN		82.8	
300	7.5		17.1		69.9		2.4		-3.5		0.1		OVRLD		81.8	
13:42:00	6.4		17.1		67.2		2.5		-4.0	16.000	0.2		OPEN F		84.0F	
200	6.2		17.1		66.7		2.5		-4.0		0.2		OPEN		83.3	
300	7.5		17.1		69.6		2.4		-3.5		0.1		OVRLD		81.9	

CEm PORT 1

TRC ENVIRONMENTAL CONSULTANTS ALGONQUIN GAS TRANSMISSION COMPANY HANOVER NJ EMISSION COMPLIANCE PROGRAM

123 1114 100 200	01 CO PPM	02	03 OXYGEN PERCENT	04	05 NOX PPM	06	07 CO2 PERCENT	08	09 CO PPM	10	11 THC PPM C3	12	13 STACK TEMP	14	15 MELS TEMP	16
13:44:00	6.3		17.1		67.0		2.5		-4.0	16.000	0.2		OPEN F		83.1F	
200	6.2		17.1		66.8		2.5		-4.0		0.2		OPEN		83.5	
300	7.5		17.1		69.3		2.4		-3.5		0.1		OVRLD		82.0	
13:46:00	6.1		17.1		67.2		2.5		-4.0	16.000	0.5		OPEN F		83.9F	
200	6.2		17.1		66.8		2.5		-4.0		0.2		OPEN		83.7	
300	7.5		17.1		68.9		2.4		-3.5		0.1		OVRLD		82.1	
13:48:00	6.7		17.1		66.5		2.5		-4.0	16.000	0.4		OPEN F		84.1F	
200	6.5		17.1		66.5		2.5		-4.0		0.2		OPEN		84.4	
300	7.5		17.1		68.6		2.4		-3.5		0.1		OVRLD		82.2	
13:50:00	6.1		17.1		67.7		2.5		-4.0	16.000	0.4		OPEN F		80.8F	
200	6.4		17.1		67.2		2.5		-4.0		0.2		OPEN		82.6	
300	7.5		17.1		68.4		2.4		-3.5		0.1		OVRLD		82.2	
END TEST 2-3																
14:00:11	-0.2		0.0		1.0		0.1		-6.0	36.000	1.4		OPEN F		84.6F	
200	-0.3		0.0		1.1		0.1		-3.7		1.3		OPEN		83.7	
300	6.5		14.8		59.0		2.1		-3.6		0.4		OVRLD		82.7	
14:00:36	-0.3		0.0		0.7		0.1	SYSTEM ZERO	-4.0	16.000	1.5		OPEN F		84.6F	
200	-0.3		0.0		1.0		0.1		-3.8		1.3		OPEN		83.8	
300	6.5		14.8		59.0		2.1		-3.6		0.4		OVRLD		82.7	
14:01:27	-0.5		0.0		0.7		0.1		-4.0	16.000	1.5		OPEN F		83.9F	
200	-0.3		0.0		1.0		0.1		-3.7		1.3		OPEN		83.8	
300	6.5		14.8		59.0		2.1		-3.6		0.4		OVRLD		82.7	
14:02:00	0.0		0.0		1.0		0.1		-4.0	4.0000	1.5		OPEN F		83.7F	
200	-0.3		0.0		1.0		0.1		-3.7		1.3		OPEN		83.8	
300	6.3		14.3		56.5		2.1		-3.6		0.5		OVRLD		82.8	
14:13:59	0.1		0.0		133.0	SYSTEM ZERO SPAN	0.1		-4.0	16.000	1.9		OPEN F		84.9F	
200	-0.2		0.0		176.4		0.1		-3.6		1.7		OPEN		84.8	
300	4.1		11.4		65.5		1.7		-3.7		0.7		OVRLD		83.1	
14:17:30	-0.2		22.0 SYSTEM SPAN		9.0		0.1		-4.0	16.000	0.8	SYSTEM ZERO	OPEN F		84.7F	
200	-0.1		21.8		18.9		0.1		-4.6				OPEN		84.7	
300	3.7		10.3		69.8		1.5		-3.7		0.7		OVRLD		83.3	

TRC ENVIRONMENTAL CONSULTANTS ALGONQUIN GAS TRANSMISSION COMPANY HANOVER NJ EMISSION CMPLIANCE PROGRAM

123 1114 100 200	01 CO PPM	02	03 OXYGEN PERCENT	04	05 NOX PPM	06	07 CO2 PERCENT	08	09 CO PPM	10	11 THC PPM C3	12	13 STACK TEMP	14	15 MELS TEMP	16
14:21:04	-1.3		1.5		2.2		11.9 SYSTEM SPAN		-2.0	4.0000	1.6		OPEN F		84.7F	
200	-0.4		19.2		4.2		7.8		-3.4		1.1		OPEN		84.5	
300	3.3		10.6		65.6		1.4		-3.6		0.8		OVRLD		83.4	
14:24:30	7.3 SYSTEM ZERO		0.0		1.5		0.5		-2.0	4.0000	1.7		OPEN F		84.7F	
200	3.1		0.0		1.5		4.4		-2.5		1.7		OPEN		84.6	
300	3.0		9.5		61.2		1.7		-3.6		0.9		OVRLD		83.5	
14:28:06	1.9		9.3		1.5		0.3		-2.0	4.0000	15.4 SYSTEM SPAN		OPEN F		85.7F	
200	6.1		1.5		1.4		0.3		-3.3		10.4		OPEN		85.4	
300	2.9		8.5		56.9		1.5		-3.5		1.5		OVRLD		83.6	
14:28:59	-0.2		20.5		3.2		0.2		-2.0	4.0000	13.2 SYSTEM SPAN		OPEN F		84.7F	
200	3.5		8.3		2.7		0.2		-3.2		12.7		OPEN		85.4	
300	2.9		8.5		56.9		1.5		-3.5		1.5		OVRLD		83.6	
							RACK CALS									
14:36:53	0.2		0.0		0.2		0.1 RACK ZERO		-4.0	16.000	0.0		OPEN F		85.9F	
200	0.2		0.0		0.4		0.1		-3.5		1.4		OPEN		84.9	
300	2.1		7.0		48.1		1.2		-3.7		2.3		OVRLD		83.9	
14:42:25	0.5		0.0		143.8 RACK SPAN		0.1		-4.0	4.0000	-0.3		OPEN F		85.2F	
200	0.4		0.0		143.0		0.1		-4.0		-0.2		OPEN		85.1	
300	1.5		5.3		50.6		1.0		-3.6		2.2		OVRLD		84.1	
14:44:42	0.6		22.3 RACK SPAN		9.0		0.1		-4.0	16.000	-0.3		OPEN F		86.3F	
200	0.4		7.4		121.3		0.1		-3.6		-0.2		OPEN		85.4	
300	1.3		5.3		53.1		0.9		-3.5		2.2		OVRLD		84.2	
14:47:28	0.7		0.8		71.3 RACK MID		0.1		-4.0	16.000	-1.2		OPEN F		85.4F	
200	0.4		1.4		71.1		0.1		-4.0		-1.2		OPEN		85.7	
300	1.1		5.1		51.5		0.8		-3.4		2.2		OVRLD		84.2	
14:49:22	8.3 RACK SPAN		0.1		25.0		0.1		-4.0	16.000	-1.2		OPEN F		86.0F	
200			0.4		68.6		0.1		-3.8		-1.3		OPEN		85.5	
300	0.9		4.6		51.7		0.8		-3.4		2.1		OVRLD		84.2	
14:56:21	8.6		0.0		0.7		0.1		-4.0	16.000	9.7 RACK SPAN		OPEN F		85.5F	
200	8.6		0.0		0.7		0.1		-3.9		4.7		OPEN		86.0	
300	1.6		3.4		46.8		0.6		-3.4		2.2		OVRLD		84.8	

TRC ENVIRONMENTAL CONSULTANTS ALGONQUIN GAS TRANSMISSION COMPANY HANOVER NJ EMISSION COMPLIANCE PROGRAM

123 1114 100 200	01 CO PPM	02	03 OXYGEN PERCENT	04	05 NOX PPM	06	07 CO2 PERCENT	08	09 CO PPM	10	11 THC PPM C3	12	13 STACK TEMP	14	15 MELS TEMP	16
15:03:01	0.1		0.1		0.7		0.2 SYSTEM ZERO		-4.0	16.000	0.9		OPEN F		85.9F	
200	0.0		0.2		0.8		0.2		-4.0		0.9		OPEN		85.4	
300	1.8		4.4		46.8		0.6		-3.5		2.2		OVRLD		85.0	
15:07:17	-0.3		0.0		142.8 SYSTEM SPAN		0.2		-4.0	16.000	1.0		OPEN F		87.1F	
200	-0.1		0.0		140.2		0.2		-4.0		1.0		OPEN		87.1	
300	1.8		4.4		42.8		0.6		-3.5		2.1		OVRLD		85.2	
15:10:45	0.0		22.1 SYSTEM SPAN		8.5		0.2		-4.0	16.000	-0.2		OPEN F		86.3F	
200	0.0		[illegible]		120.0		0.2		-4.0		0.2		OPEN		86.7	
300	1.9		5.0		42.7		0.6		-3.6		2.0		OVRLD		85.4	
15:13:50	-1.3		0.4		1.5		12.0 SYSTEM SPAN		-4.0	16.000	1.0		OPEN F		86.5F	
200	-1.0		9.7		1.4		[illegible]		-4.0		0.8		OPEN		87.0	
300	1.9		5.8		38.6		0.6		-3.6		2.0		OVRLD		85.5	
15:17:09	7.5		0.0		1.3		0.5		-4.0	16.000	0.8		OPEN F		84.4F	
200	7.5		0.0		1.0		0.6		-4.0		0.8		OPEN		84.2	
300	2.0		5.8		29.8		1.0		-3.6		2.0		OVRLD		85.5	
15:17:47	7.6 SYSTEM SPAN		0.0		1.0		0.4		-4.0	16.000	0.9		OPEN F		86.0F	
200	7.5		0.0		1.0		0.4		-4.0		0.8		OPEN		84.8	
300	2.0		5.8		29.8		1.0		-3.6		2.0		OVRLD		85.5	
15:19:15	5.2		1.7		1.0		0.4		-2.0	4.0000	9.4 SYSTEM SPAN		OPEN F		86.0F	
200	7.4		0.0		1.0		0.3		-4.0		[illegible]		OPEN		85.6	
300	2.3		5.0		29.7		1.1		-3.7		2.0		OVRLD		85.5	
15:20:00	0.0		18.1		1.5		0.2		-4.0	16.000	0.6		OPEN F		86.0F	
200	5.7		3.2		1.0		0.3		-4.0		3.0		OPEN		85.7	
300	2.3		4.9		29.7		1.0		-3.8		1.9		OVRLD		85.6	
15:22:00	-0.3		21.4		1.3		0.2		-4.0	16.000	0.5		OPEN F		86.7F	
200	-0.2		20.9		1.3		0.2		-4.0		0.4		OPEN		86.0	
300	2.3		5.6		29.7		0.6		-3.8		1.9		OVRLD		85.6	
15:24:00	-0.4		21.5		1.0		0.2		-4.0	16.000	0.3		OPEN F		86.5F	
200	-0.2		21.2		1.2		0.2		-4.0		0.4		OPEN		86.4	
300	2.1		6.3		29.7		0.6		-3.8		1.9		OVRLD		85.7	

123 TRC ENVIRONMENTAL CONSULTANTS ALGONQUIN GAS TRANSMISSION COMPANY HANOVER NJ EMISSION CMPLIANCE PROGRAM

1114	01	02	03	04	05	06	07	08	09	10	11	12	13	14	15	16
100	CO		OXYGEN		NOX		CO2		CO		THC		STACK		MELS	
200	PPM		PERCENT		PPM		PERCENT		PPM		PPM C3		TEMP		TEMP	
15:26:00	-0.4		21.5		1.0		0.2		-4.0	16.000	0.4		OPEN F		85.8F	
200	-0.5		21.5		1.0		0.2		-4.0		0.4		OPEN		85.9	
300	1.8		7.0		29.7		0.6		-3.9		1.8		OVRLD		85.8	
15:28:00	-0.4		21.5		1.0		0.2		-4.0	16.000	0.6		OPEN F		87.1F	
200	-0.4		21.5		1.0		0.2		-4.0		0.4		OPEN		86.3	
300	1.7		7.5		29.7		0.5		-3.9		1.3		OVRLD		85.8	
15:30:00	-0.4		21.5		1.0		0.2		-4.0	16.000	1.5		OPEN F		82.5F	
200	-0.4		21.5		1.0		0.2		-4.0		0.5		OPEN		86.3	
300	1.7		7.5		29.7		0.5		-3.8		0.9		OVRLD		85.7	
15:32:00	-0.3		21.5		1.3		0.2		-4.0	16.000	31.8		OPEN F		83.9F	
200	-0.3		21.5		1.1		0.2		-4.5		13.2		OPEN		83.3	
300	1.7		8.2		29.7		0.6		-3.8		1.7		OVRLD		85.7	
15:34:00	93.3		18.9		17.2		1.7		-4.0	16.000	2.1		OPEN F		85.1F	
200	48.1		20.5		3.9		0.8		-4.3		8.3		OPEN		83.8	
300	4.8		8.9		30.3		0.6		-3.7		1.7		OVRLD		85.7	
15:36:00	16.9		18.0		33.8		2.5		-4.0	16.000	0.0		OPEN F		86.6F	
200	31.5		18.3		26.0		2.0		-4.0		0.0		OPEN		86.6	
300	5.4		9.5		31.4		0.7		-3.7		1.7		OVRLD		85.7	
15:38:00	8.4		17.0		87.2		2.7		-4.0	16.000	-0.2		OPEN F		86.0F	
200	17.2		17.5		56.0		2.4		-4.1		0.0		OPEN		86.0	
300	5.6		10.0		34.3		0.8		-3.7		1.7		OVRLD		85.8	
15:40:00	7.6		17.1		85.2		2.6		-4.0	16.000	-0.2		OPEN F		86.5F	
200	13.6		17.3		68.2		2.5		-4.0		-0.1		OPEN		86.7	
300	5.9		10.6		32.7		0.9		-3.8		1.7		OVRLD		85.8	
15:42:00	7.6		17.1		84.5		2.6		-4.0	16.000	-0.4		OPEN F		86.0F	
200	7.8		17.1		84.5		2.6		-4.0		-0.3		OPEN		86.1	
300	6.1		11.2		30.7		0.9		-3.8		1.7		OVRLD		85.8	
15:44:00	7.7		17.1		83.8		2.6		-6.0	36.000	-0.3		OPEN F		86.4F	
200	7.8		17.1		84.3		2.6		-4.1		-0.2		OPEN		86.3	
300	6.4		11.2		28.8		1.0		-4.0		1.7		OVRLD		85.9	

TEST 1-3 11/14/90 1540 PORT 4

123 TRC ENVIRONMENTAL CONSULTANTS ALGONQUIN GAS TRANSMISSION COMPANY HANOVER NJ EMISSION CMPLIANCE PROGRAM

1114	01	02	03	04	05	06	07	08	09	10	11	12	13	14	15	16
100	CO		OXYGEN		NOX		CO2		CO		THC		STACK		MELS	
200	PPM		PERCENT		PPM		PERCENT		PPM		PPM C3		TEMP		TEMP	
15:46:00	7.8		17.2		83.8		2.6		-4.0	16.000	-0.2		OPEN F		86.9F	
200	7.7		17.2		83.2		2.6		-4.0		-0.2		OPEN		86.6	
300	6.6		11.3		31.0		1.1		-4.0		1.7		OVRLD		85.9	
15:48:00	7.6		17.2		83.0		2.6		-4.0	16.000	-0.2		OPEN F		86.6F	
200	7.7		17.2		83.2		2.6		-4.1		-0.2		OPEN		86.7	
300	6.8		11.9		31.3		1.2		-4.0		1.7		OVRLD		86.0	
15:50:00	7.8		17.2		82.7		2.6		-4.0	16.000	-0.2		OPEN F		87.4F	
200	7.7		17.2		82.9		2.5		-4.2		-0.2		OPEN		86.9	
300	6.8		12.4		34.0		1.3		-4.0		1.7		OVRLD		86.0	
15:52:00	7.8		17.2		82.5		2.5		-4.0	16.000	-0.2		OPEN F		86.8F	
200	7.8		17.2		82.7		2.5		-4.1		-0.2		OPEN		86.9	
300	6.8		13.0		36.7		1.3		-4.0		1.8		OVRLD		86.0	
15:54:00	7.8		17.2		84.2		2.5		-6.0	36.000	-0.1		OPEN F		87.2F	
200	7.8		17.2		83.2		2.5		-4.3		-0.2		OPEN		87.0	
300	6.8		13.6		39.5		1.4		-4.1		1.8		OVRLD		86.1	
15:56:00	7.7		17.2		83.0		2.5		-4.0	16.000	-0.2		OPEN F		86.4F	
200	7.8		17.2		83.4		2.5		-4.0		-0.3		OPEN		86.1	
300	6.7		14.2		42.2		1.5		-4.1		1.5		OVRLD		86.1	
15:58:00	7.7		17.2		83.8		2.5		-6.0	36.000	-0.2		OPEN F		83.9F	
200	7.8		17.2		83.2		2.5		-4.2		-0.2		OPEN		86.3	
300	6.8		14.2		45.0		1.6		-4.2		1.4		OVRLD		86.0	

CEM PORT 3

16:00:00	7.7		17.4		74.2		2.5		-4.0	16.000	-0.2		OPEN F		86.5F	
200	7.6		17.3		82.7		2.4		-4.4		-0.2		OPEN		86.0	
300	7.0		14.3		47.4		1.7		-4.2		1.4		OVRLD		86.0	
16:02:00	7.8		17.2		85.7		2.5		-4.0	16.000	-0.2		OPEN F		86.1F	
200	7.7		17.2		84.6		2.5		-3.8		-0.1		OPEN		87.0	
300	7.3		14.9		50.2		1.7		-4.1		1.3		OVRLD		86.1	
16:04:00	8.0		17.2		87.0		2.5		-6.0	36.000	-0.1		OPEN F		86.5F	
200	7.8		17.2		85.4		2.5		-4.1		-0.1		OPEN		86.5	
300	7.6		15.5		53.1		1.8		-4.2		1.3		OVRLD		86.1	

Scott Specialty Gases

Electronics Group

2330 Hamilton Blvd., South Plainfield, N.J. 07080 Phone: (201) 754-7700 FAX: (201) 754-7303

SCOTT SPECIALTY GASES, INC. 4/27/90

CERTIFICATE OF ANALYSIS

TRC
11 VILLAGE STREET
EAST HARTFORD
CT 06108-0000

ATT:RECEIVING DEPT

PROJECT #: 07-05450
PO #: 19646

CYLINDER #: 3L1716

ANALYTICAL ACCURACY: +/- 1%

COMPONENT	REQUESTED CONCENTRATION		ANALYSIS 1 (MOLES)	U/M
PROPANE	10.0	PPM	9.67	PPM
AIR	BALANCE GAS			N/A

DATE OF ANALYSIS: 4/25/90

ANALYST: _____ ADELA SY

APPROVED BY: _____ JOHN O'SHEA

Mike Martin

Scott Specialty Gases
Electronics Group
2330 Hamilton Blvd., South Plainfield, N.J. 07080 Phone: (201) 754-7700 FAX: (201) 754-7303

SCOTT SPECIALTY GASES, INC. 4/27/90

CERTIFICATE OF ANALYSIS

TRC
11 VILLAGE STREET
EAST HARTFORD
CT 06108-0000
ATT:RECEIVING DEPT

PROJECT #: 07-05450
PO #: 19646

CYLINDER #: AAL8734 ANALYTICAL ACCURACY: +/- 1%

COMPONENT	REQUESTED CONCENTRATION		ANALYSIS 1 (MOLES)	U/M
PROPANE	100.0	PPM	104.0	PPM
AIR	BALANCE GAS			N/A

DATE OF ANALYSIS: 4/25/90

ANALYST: ADELA SY APPROVED BY: JOHN O'SHEA

Scott Specialty Gases
a division of Scott Environmental Technology, Inc.
SOUTH PLAINFIELD, NJ 07080 PHONE: (201) 754-7700 TWX: 201844552

2772

TRC Environmental Consultants
11 Village Street
E. Hartford, CT 06108

Date: June 9, 1988
QC No.: F-098 JOA
Your P.O. No.: 17608
Invoice No.: 199789

ANALYTICAL REPORT

Cyl No. AAL-2233 AAL-6429 — Analytical Accuracy +/-1%

Component	Concentration
Carbon Monoxide	495 PPM
Nitrogen	Balance

Cyl No. AAL-1746 — Analytical Accuracy +/-1%

Component	Concentration
Nitric Oxide	513 PPM
Nitrogen	Balance

Cyl No. AAL-4033 — Analytical Accuracy +/-1%

Component	Concentration
Nitric Oxide	518 PPM
Nitrogen	Balance

Cyl No. AAL-3934 — Analytical Accuracy ____

Component	Concentration
Sulfur Dioxide	239 PPM
Carbon Dioxide	12.0%
Nitrogen	Balance

ANALYTICAL ACCURACY
Sulfur Dioxide ± 1%
Carbon Dioxide ± 0.02% Absolute

Analyst John O'Shea
Approved By Adela Sy

RESULTS ARE IN VOLUME PERCENT UNLESS OTHERWISE INDICATED.

The only liability of this Company for gas which fails to comply with this analysis shall be replacement thereof by the Company without extra cost.

CERTIFIED REFERENCE MATERIALS EPA PROTOCOL GASES
ACUBLEND® CALIBRATION & SPECIALTY GAS MIXTURES PURE GASES
ACCESSORY PRODUCTS CUSTOM ANALYTICAL SERVICES

PLUMSTEADVILLE, PENNSYLVANIA / TROY, MICHIGAN / SAN BERNARDINO, CALIFORNIA / HOUSTON, TEXAS
WHEELING, ILLINOIS / FREMONT, CALIFORNIA / WAKEFIELD, MASSACHUSETTS / LONGMONT, COLORADO

Scott Specialty Gases
Electronics Group
2330 Hamilton Blvd., South Plainfield, N.J. 07080 Phone: (201) 754-7700 FAX: (201) 754-7303

SCOTT SPECIALTY GASES, INC.

3/06/90

CERTIFICATE OF ANALYSIS

TRC
11 VILLAGE STREET
EAST HARTFORD

PROJECT #: 07-04737
PO #: 19432

ATT:RECEIVING DEPT

CT 06108-0000

CYLINDER #: ALM009709

ANALYTICAL ACCURACY: -

COMPONENT	REQUESTED CONCENTRATION		ANALYSIS 1 (MOLES)	U/M
CARBON DIOXIDE	5.0	PCT	4.99	PCT
SULFUR DIOXIDE	100.0	PPM	103.0	PPM
NITROGEN	BALANCE	GAS		N/A

NOTES: THIS MATERIAL TRACEABLE TO NBS CRM 1675, CRM 1694

DATE OF ANALYSIS: 2/22/90

ANALYST: JOHN O'SHEA

APPROVED BY: Donald Dudics
DONALD DUDICS

THE ONLY LIABILITY OF THIS COMPANY FOR GAS WHICH FAILS TO COMPLY WITH THIS ANALYSIS SHALL BE THE REPLACEMENT THEREOF BY THE COMPANY WITHOUT EXTRA COST

APPENDIX C

EPA Method 20 Performance Checks

Scott Specialty Gases

Electronics Group

2330 Hamilton Blvd., South Plainfield, N.J. 07080 Phone: (201) 754-7700 FAX: (201) 754-7303

Date Shipped 11/8/90
Our Project No: 0707921
Your P.O. No: 20262
Page 2 of 2
Expiration Date: 5/8/92

CERTIFICATE OF ANALYSIS—EPA PROTOCOL GASES*

Certified Per Traceability Protocol No. 1 Procedure No. G1 Cylinder No. ALM008205 Cylinder Pressure 2000 psig Certified Accuracy ±1 % NBS Traceable

COMPONENTS	CERTIFIED CONC	REFERENCE STD SRM/CRM NO.	REFERENCE STD CYL. NO.	REFERENCE STD CONC.	GAS ANALYZER MAKE/MODEL/SERIAL NO.	GAS ANALYZER LAST CAL. DATE	GAS ANALYZER ANALYTICAL PRINCIPLE
Nitric Oxide	143 ppm	1685	CAL5851	236 ppm	Teco 10S/26404-225	8/15/90	Chemiluminescence

BALANCE GAS Nitrogen/Oxygen Free

ANALYZER READINGS: Z = Zero Gas T = Test Gas R = Reference Gas

Component Nitric Oxide
First Analysis Date 10/31/90 Units ppm

Z 0	R 204	T 142
R 204	Z 0	T 142
Z 0	T 142	R 204

Mean Test Assay 142

Second Analysis Date 11/8/90 Units ppm

Z 0	R 204	T 143
R 204	Z 0	T 143
Z 0	T 143	R 204

Mean Test Assay 143

Component _____
Date _____ Units _____

Z	R	T
R	Z	T
Z	T	R

Mean Test Assay _____

Date _____ Units _____

Z	R	T
R	Z	T
Z	T	R

Mean Test Assay _____

Component _____
Date _____ Units _____

Z	R	T
R	Z	T
Z	T	R

Mean Test Assay _____

Date _____ Units _____

Z	R	T
R	Z	T
Z	T	R

Mean Test Assay _____

Analyst John O'Shea

Approved By: Adela Sy

Scott Specialty Gases

Electronics Group

2330 Hamilton Blvd., South Plainfield, N.J. 07080 Phone: (201) 754-7700 FAX: (201) 754-7303

Date Shipped: 11/8/90
Our Project No: 0707921
Your P.O. No: 20262
Page 1 of 2
Expiration Date: 5/ 8/92

CERTIFICATE OF ANALYSIS—EPA PROTOCOL GASES*

Certified Per Traceability Protocol No. 1 Procedure No. G1 Cylinder No. 1L2066 Cylinder Pressure 2000 psig Certified Accuracy ±1 % NBS Traceable

COMPONENTS	CERTIFIED CONC	REFERENCE STD SRM/CRM NO.	CYL. NO.	CONC.	GAS ANALYZER MAKE/MODEL/SERIAL NO.	LAST CAL. DATE	ANALYTICAL PRINCIPLE
Nitric Oxide	71.2 ppm	1684	ALM3675	97.28 ppm	Teco 10S/26404-225	8/15/90	Chemiluminescence

BALANCE GAS Nitrogen/Oxygen Free

ANALYZER READINGS: Z = Zero Gas T = Test Gas R = Reference Gas

Component: Nitric Oxide
First Analysis Date: 10/31/90 Units: ppm

Z	0	R	97.28	T	70.7
R	97.28	Z	0	T	70.7
Z	0	T	71.2	R	97.28

Mean Test Assay: 70.9

Second Analysis Date: 11/8/90 Units: ppm

Z	0	R	97.28	T	71.4
R	97.28	Z	0	T	71.4
Z	0	T	71.6	R	97.28

Mean Test Assay: 71.5

Component: ____ Date: ____ Units: ____

Z		R		T	
R		Z		T	
Z		T		R	

Mean Test Assay: ____

Date: ____ Units: ____

Z		R		T	
R		Z		T	
Z		T		R	

Mean Test Assay: ____

Component: ____ Date: ____ Units: ____

Z		R		T	
R		Z		T	
Z		T		R	

Mean Test Assay: ____

Date: ____ Units: ____

Z		R		T	
R		Z		T	
Z		T		R	

Mean Test Assay: ____

Analyst: John O'Shea

Approved By: Adela Sy

Scott Specialty Gases

a division of Scott Environmental Technology, Inc.

PLUMSTEADVILLE, PA 18949 PHONE: 215-766-8861 TWX: 510-665-9344

Shipped From: Scott So.Plainfield
Date Shipped 3/7/90
Our Project No: 0704737
Your P.O. No: 19432
Page 1 of 1
Expiration Date: 9/7/91

CERTIFICATE OF ANALYSIS – EPA PROTOCOL GASES*

Certified Per Traceability Protocol No. 1 Procedure No. G1 Cylinder No. ALM-005152 Cylinder Pressure 2000 psig Certified Accuracy ±1 % NBS Traceable

REFERENCE STD

COMPONENTS	CERTIFIED CONC	SRM/CRM NO.	CYL. NO.	CONC.
Oxygen	22.06%	2659	AAL-18592	20.66%

GAS ANALYZER

MAKE/MODEL/SERIAL NO.	LAST CAL. DATE	ANALYTICAL PRINCIPLE
Varian 3700	2/2/90	GC - TCD
372000-00/31608928-11		

BALANCE GAS Nitrogen

ANALYZER READINGS: Z = Zero Gas T = Test Gas R = Reference Gas

Component Oxygen
First Analysis Date 3/7/90 Units %

Z 0	R 20.66	T 22.06
R 20.66	Z 0	T 22.02
Z 0	T 22.10	R 20.66

Mean Test Assay 22.06

Second Analysis Date ____ Units ____

Z	R	T
R	Z	T
Z	T	R

Mean Test Assay ____

Component ____ Date ____ Units ____

Z	R	T
R	Z	T
Z	T	R

Mean Test Assay ____

Date ____ Units ____

Z	R	T
R	Z	T
Z	T	R

Mean Test Assay ____

Component ____ Date ____ Units ____

Z	R	T
R	Z	T
Z	T	R

Mean Test Assay ____

Date ____ Units ____

Z	R	T
R	Z	T
Z	T	R

Mean Test Assay ____

Chronology: Date 3/7/90
Assay 20.06% O_2

Analyst John O'Shea

Approved By: Adela Sy

Scott Specialty Gases
Electronics Group
2330 Hamilton Blvd., South Plainfield, N.J. 07080 Phone: (201) 754-7700 FAX: (201) 754-7303

2772

TRC ENVIRONMENTAL CONSULTANTS
11 VILLAGE STREET
E.HARTFORD CT 06108

Date: January 19, 1989
QC No.: A-199 AAS
Your P.O. No.: 18272
Invoice No.: 122962

ANALYTICAL REPORT

Cyl No. ALM-2023 Analytical Accuracy ____

Component	Concentration
NITROGEN-ZERO	99.998%MIN.
THC	LT 0.5PPM

Cyl No. ALM-2120 Analytical Accuracy ____

Component	Concentration
AIR	ZERO
THC	LT 0.5PPM

Cyl No. ALM-2015 Analytical Accuracy ____

Component	Concentration
AIR	ZERO
THC	LT 0.5PPM

Cyl No. ____ Analytical Accuracy ____

Component	Concentration

Analyst Adela Sy

Approved By John O'Shea

RESULTS ARE IN VOLUME PERCENT UNLESS OTHERWISE INDICATED.

The only liability of this Company for gas which fails to comply with this analysis shall be replacement thereof by the Company without extra cost.

CERTIFIED REFERENCE MATERIALS EPA PROTOCOL GASES
ACUBLEND® CALIBRATION & SPECIALTY GAS MIXTURES PURE GASES
ACCESSORY PRODUCTS CUSTOM ANALYTICAL SERVICES

PLUMSTEADVILLE, PENNSYLVANIA / TROY, MICHIGAN / SAN BERNARDINO, CALIFORNIA / HOUSTON, TEXAS
WHEELING, ILLINOIS / FREMONT, CALIFORNIA / WAKEFIELD, MASSACHUSETTS / LONGMONT, COLORADO

TURBINE SAMPLING SYSTEM

Zero and Span Drift Data

Turbine Type Simple Cycle LN6 S/N CC84068

Date: 11/13/90

Test No.: T-1-1

Analyzer: Type NO_x (Thermo Electron) S/N 10AR22558205

	Initial Calibration, ppm or %	Final Calibration, ppm or %	Difference Initial-Final, ppm or %	% of Span
Zero Gas	0.2	-0.7	0.9	0.4
High Calibration Gas (Span Gas)	146.0	145.7	0.3 *	0.1

$$\% \text{ of Span} = \frac{\text{Absolute Value of Difference}}{\text{Instrument Span}} \times 100$$

* Corrected for zero drift, i.e., if zero drift over test period is +2 ppm then 2 ppm shall be subtracted from the difference between the initial and final readings.

EPA METHOD 20
TURBINE SAMPLING SYSTEM

Zero and Span Calibration Data

Turbine Simple cycle (LN6) #1 Identification number 0001

Date: 11/13/90 Test Number T-1-1

Analyzer type: NO_x Thermo Electron Identification number 10AR22558205

	Cylinder value, ppm or %	Initial analyzer response, ppm or %	Final analyzer responses, ppm or %	Difference: initial-final, ppm or %	
Zero gas	0.0	0.0	-0.7	0.7	0.3
Low - level gas	71.2	72.2	74.2	2.0	0.8
Mid - level gas	143.0	147.5	145.7	1.8	0.7
High - level gas					

$$\text{Percent drift} = \frac{\text{Absolute Difference}}{\text{Span value}} \times 100$$

EPA METHOD 20
TURBINE SAMPLING SYSTEM

Zero and Span Drift Data

Turbine Type LN6 Simple Cycle turbine #2 S/N CC84068

Date: 11/14/90

Test No.: Tests #s 1,2,3

Analyzer: Type NOx ThermoElectron S/N 10AR22558205

	Initial Calibration, ppm or %	Final Calibration, ppm or %	Difference Initial-Final, ppm or %	% of Span
Zero Gas	0.0	-0.2	0.2	0.08
High Calibration Gas (Span Gas)	142.7	142.8 ~~153.0~~	0.1 * ~~12.3~~	~~4.4~~ 0.04

$$\% \text{ of Span} = \frac{\text{Absolute Value of Difference}}{\text{Instrument Span}} \times 100$$

* Corrected for zero drift, i.e., if zero drift over test period is +2 ppm then 2 ppm shall be subtracted from the difference between the initial and final readings.

EPA METHOD 20
TURBINE SAMPLING SYSTEM

Zero and Span Calibration Data

Turbine LN6 Simple Cycle #2 Identification number 0002

Date: 11/14/90 Test Number Tests 1,2,3

Analyzer type: ThermoElectron NOx Identification number 10AR22558205

	Cylinder value, ppm or %	Initial analyzer response, ppm or %	Final analyzer responses, ppm or %	Difference: initial-final, ppm or %
Zero gas	0.0	-0.2	-0.2	~~0.08~~ 0.0
Low - level gas	71.7	73.8	74.0	0.2
Mid - level gas	143	142.7	~~153.0~~ 142.8	~~[illegible]~~ 0.1
High - level gas				

$$\text{Percent drift} = \frac{\text{Absolute Difference}}{\text{Span value}} \times 100$$

TRC ENVIRONMENTAL CONSULTANTS ALGONQUIN GAS TRANSMISSION COMPANY HANOVER NJ EMISSION CMPLIANCE PROGRAM

23 0905	01	02	03	04	05	06	07	08	09	10	11	12	13	14	15	16
00 200	CO PPM		OXYGEN PERCENT		NOX PPM		CO2 PERCENT		CO PPM		THC PPM C3		STACK TEMP		MFLS TEMP	
08:59:47	0.2	ZERO ANALYZER	21.2		0.0	ZERO ANALYZER	0.2		-4.0	16.000	0.7		OPEN F		81.8F	
200	0.3		21.2		0.0		0.1		-3.7		0.3		OPEN		81.4	
00	-0.7		21.1		-1.3		0.1		-4.0		3.1		OURLD		81.0	
9:07:18	0.1	ZERO RACK	0.2	ZERO RACK	0.0	ZERO RACK	0.1	ZERO RACK	-4.0	16.000	0.7		OPEN F		82.3F	
00	-0.1		6.0		0.2		0.1		-3.0		0.8		OPEN		81.8	
500	-0.5		20.5		-1.1		0.1		-4.0		2.5		OURLD		81.1	
9:21:46	0.0		0.0		143.5	MID SPAN 143.0 PPM	0.1		-4.0	16.000	1.1		OPEN F		81.8F	
00	0.0		0.0		141.8		0.1		-2.6		1.2		OPEN		80.9	
00	-0.3		15.5		21.6		0.1		-3.6		1.4		OURLD		80.9	
8:31:15	2.7		0.0		144.5		0.1		-2.0	4.0000	1.2		OPEN F		80.5F	
00	0.0		0.0		142.2		0.1		-3.1		1.2		OPEN		81.7	
500	0.0		12.1		50.3		0.1		-3.4		0.7		OURLD		80.7	
8:47:30	0.1		0.0		147.5	MID SPAN	0.1		-2.0	4.0000	1.2		OPEN F		79.1F	
200	0.0		0.0		147.7		0.1		-2.6		1.0		OPEN		78.5	
500	0.1		6.4		101.7		0.1		-3.2		0.5		OURLD		80.9	
9:02:48	0.2		0.0		72.2	LOW SPAN 71.2	0.1		-2.0	4.0000	1.0		OPEN F		81.3F	
00	3.1		0.0		72.4		0.1		-3.5		0.0		OPEN		81.4	
00	0.0		3.0		139.7		0.1		-2.8		0.7		OURLD		80.9	
9:06:26	0.0		11.3	11% MID RACK	0.2		0.1		-4.0	16.000	1.9		OPEN F		81.1F	
0	0.0		11.0		0.9		0.1		-3.5		1.2		OPEN		81.7	
00	0.0		2.6		144.6		0.1		-2.8		0.7		OURLD		80.8	
9:10:39	0.7		22.4	22% UPPER SPAN	0.0		0.1		-4.0	16.000	1.3		OPEN F		81.4F	
00	0.0		14.8		0.4		0.1		-3.3		1.2		OPEN		81.8	
00	0.0		3.3		144.6	INTERFERENCE CHECK 18/13	0.1		-2.8		0.7		OURLD		80.8	
9:14:21	-0.9		0.0		0.0		5.4	CO2 MID 5%	-4.0	16.000	2.2		OPEN F		[illegible]	
0	-0.4		2.6		0.0		5.7		-3.5		1.7		OPEN		82.9	
0	0.0		4.1		136.2		0.2		-2.8		0.7		OURLD		80.9	
116:42	-1.3		0.2		0.2		12.7	CO2 UPPER 12%	-2.0	16.000	2.5		OPEN F		[illegible]4F	
00	-0.[illegible]		1.6		0.1		1.4		-3.3		1.9		OPEN		[illegible]	
00	0.0		4.2		131.6		0.6		-2.8		0.8		OURLD		81.0	

TRC ENVIRONMENTAL CONSULTANTS ALGONQUIN GAS TRANSMISSION COMPANY HANOVER NJ EMISSION COMPLIANCE PROGRAM

	01 CO PPM	02	03 OXYGEN PERCENT	04	05 NOX PPM	06	07 CO2 PERCENT	08	09 CO PPM	10	11 THC PPM C3	12	13 STACK TEMP	14	15 MFI S TEMP	16
22:47	0.0 ANALYZER ZERO		21.6		0.2 ANALYZER ZERO		0.1		-4.0	16.000	0.1		OPEN F		80.0F	
	-0.9		21.6		0.2		0.1		-3.5		0.0		OPEN		79.7	
	-1.2		21.6		0.3		0.1		-3.0		0.1		NURLD		81.6	
26:51	-0.2 RACK ZERO		0.1 RACK ZERO		0.0 RACK ZERO		0.1 RACK ZERO		-4.0	16.000	0.0		OPEN F		80.3F	
	-0.1		0.4		0.0		0.1		-4.0		0.0		OPEN		80.2	
	-1.2		20.8		0.3		0.1		-3.0		0.1		NURLD		81.4	
35:37	0.1		0.0		142.7 SPAN		0.1		-4.0	16.000	0.1		OPEN F		80.1F	
	0.2		0.0		141.6		0.1		-4.0		0.1		OPEN		79.4	
	-1.0		18.0		13.2		0.1		-3.2		0.1		NURLD		81.2	
39:48	0.3		0.0		73.8 MID		0.1		-4.0	16.000	1.2		OPEN F		81.1F	
	0.0		0.0		111.8		0.1		-4.0		0.5		OPEN		80.4	
	-0.9		16.5		20.6		0.1		-3.1		0.1		NURLD		81.1	
41:34	-0.2		0.0		73.0		0.1		-4.0	16.000	0.2 ANALYZER ZERO		OPEN F		79.7F	
	0.2		0.0		73.9		0.1		-4.0		0.6		OPEN		79.6	
	-0.9		15.8		23.0		0.1		-3.2		0.1		NURLD		81.1	
46:09	0.0		11.4 MID		0.2		0.1		-4.0	16.000	9.7 SPAN		OPEN F		80.6F	
	0.0		11.4		0.3		0.1		-4.0		9.1		OPEN		80.7	
	-0.7		14.4		25.7		0.1		-3.2		0.7		NURLD		80.8	
:49:35	0.2		22.7 SPAN		0.2		0.1		-4.0	16.000	3.9		OPEN F		81.2F	
	0.1		15.7		0.2		0.1		-4.0		5.3		OPEN		80.8	
	-0.7		14.3		25.6		0.1		-3.3		0.8		NURLD		80.8	
5:52:21	0.2		22.7		0.2		0.1		-4.0	16.000	4.7 MID		OPEN F		81.1F	
	0.2		22.7		0.1		0.1		-4.0		2.4		OPEN		80.9	
	-0.6		14.3		25.6		0.1		-3.4		1.1		NURLD		80.7	
5:56:00	0.9		0.0		0.2		12.1 SPAN		-4.0	16.000	4.5		OPEN F		80.2F	
	1.6		0.0		0.4		12.2		-4.0		4.5		OPEN		80.3	
	-0.5		13.0		25.6		0.9		-3.4		1.4		NURLD		80.6	
5:58:11	1.9		0.0		0.2		5.3 MID		-4.0	16.000	-1.0		OPEN F		80.8F	
	1.4		0.2		0.3		5.2		-4.0		3.9		OPEN		80.5	
	-0.4		12.3		25.6		1.0		-3.5		1.3		NURLD		80.6	

INTERFERENCE CHECK

11/14

EPA METHOD 20

RESPONSE TIME System

Date of Test 11/13/90 S/N

Analyzer Type Thermo Electron Nox Model 10

Span Gas Concentration 143 ppm

Analyzer Span Setting ~~#6~~ 137.2 ppm System

Upscale
1 130 seconds
2 132 seconds
3 130 seconds

Average upscale response 131 seconds

Downscale
1 105 seconds
2 120 seconds
3 118 seconds

Average downscale response 114 seconds

System response time = slower average time = 131 seconds.

Date of Test 11/14/90 S/N

Analyzer Type Nox Thermo Electron Model 10

Span Gas Concentration 143 ppm

Analyzer Span Setting 142.7 ppm

Upscale
1 131 seconds
2 130 seconds
3 142 seconds

Average upscale response 134 seconds

Downscale
1 120 seconds
2 117 seconds
3 123 seconds

Average downscale response 120 seconds

System response time = slower average time = 134 seconds.

APPENDIX D

Process Data

#1 Unit
11/13/90

11:30 AM

GT - HANOVER COMPRESSOR STATION
OLAR CENTAUR 3830 NATURAL GAS TURBINE/COMPRESSOR PERFORMANCE
DATE 14:25:24 TIME 11-13-1990

OPERATING CONDITIONS

UCTION PRESSURE	593 PSIG	FUEL FLOW	40 MMBTU/H
ISCHARGE PRESSURE	665 PSIG	PCD	122 PSIG
PRESSURE RATIO	1.12	T5	1090 DEG F
UCTION TEMPERATURE	61 DEG F	NGP	100 %
ISCHARGE TEMPERATURE	85 DEG F	NPT	91 %
THROUGHPUT	25190 MMBTU/H	FUEL RATIO	0.2 % FUEL/THROUGHPUT
MBIENT TEMPERATURE	39 DEG F		

PERFORMANCE PARAMETERS

	GROSS HP BEFORE LOSSES	INLET LOSSES HP	EXHAUST LOSSES HP	NPT LOSSES HP	ELEV. LOSSES HP	NET HP AFTER LOSSES
FUEL	15545					
ATED	4006	31	20	18	-10	3947
GP	4010	31	20	18	-10	3950
PCD	3900	31	20	12	-9	3846
5	4056	32	20	20	-10	3994
OMP	2724					

	% EFF	
ATED	25.4	RATED NET HP/FUEL GROSS HP
GP	100.1	NET NGP HP/NET RATED HP
PCD	97.4	NET PCD HP/NET RATED HP
5	101.2	NET T5 HP/NET RATED HP
OMP	69.3	COMPRESSOR HP/AVERAGE NET HP
OVERALL	17.5	COMPRESSOR HP/FUEL HP

#1 Unit

11/13/90 12:00 NOON

GT - HANOVER COMPRESSOR STATION
SOLAR CENTAUR 3830 NATURAL GAS TURBINE/COMPRESSOR PERFORMANCE
DATE 14:43:19 TIME 11-13-1990

OPERATING CONDITIONS

UCTION PRESSURE	611 PSIG	FUEL FLOW	40 MMBTU/H
DISCHARGE PRESSURE	672 PSIG	PCD	121 PSIG
RESSURE RATIO	1.10	T5	1090 DEG F
UCTION TEMPERATURE	70 DEG F	NGP	100 %
DISCHARGE TEMPERATURE	90 DEG F	NPT	89 %
THROUGHPUT	27822 MMBTU/H	FUEL RATIO	0.1 % FUEL/THROUGHPUT
MBIENT TEMPERATURE	40 DEG F		

PERFORMANCE PARAMETERS

	GROSS HP BEFORE LOSSES	INLET LOSSES HP	EXHAUST LOSSES HP	NPT LOSSES HP	ELEV. LOSSES HP	NET HP AFTER LOSSES
UEL	15545					
ATED	3998	31	20	30	-9	3926
NGP	4001	31	20	31	-9	3929
CD	3839	30	19	20	-9	3777
5	4040	32	20	33	-10	3965
COMP	2545					

	% EFF	
ATED	25.3	RATED NET HP/FUEL GROSS HP
NGP	100.1	NET NGP HP/NET RATED HP
CD	96.2	NET PCD HP/NET RATED HP
5	101.0	NET T5 HP/NET RATED HP
COMP	65.4	COMPRESSOR HP/AVERAGE NET HP
VERALL	16.4	COMPRESSOR HP/FUEL HP

#1 Unit
11/13/90 1:00 PM

GT - HANOVER COMPRESSOR STATION
SOLAR CENTAUR 3830 NATURAL GAS TURBINE/COMPRESSOR PERFORMANCE
ATE 14:40:35 TIME 11-13-1990

OPERATING CONDITIONS

UCTION PRESSURE	622	PSIG	FUEL FLOW	40	MMBTU/H
DISCHARGE PRESSURE	672	PSIG	PCD	122	PSIG
RESSURE RATIO	1.08		T5	1090	DEG F
UCTION TEMPERATURE	74	DEG F	NGP	100	%
DISCHARGE TEMPERATURE	94	DEG F	NPT	88	%
HROUGHPUT	29232	MMBTU/H	FUEL RATIO	0.1	% FUEL/THROUGHPUT
MBIENT TEMPERATURE	40	DEG F			

PERFORMANCE PARAMETERS

	GROSS HP BEFORE LOSSES	INLET LOSSES HP	EXHAUST LOSSES HP	NPT LOSSES HP	ELEV. LOSSES HP	NET HP AFTER LOSSES
UEL	15545					
ATED	3998	31	20	38	-9	3918
NGP	4001	31	20	38	-9	3921
CD	3902	31	20	31	-9	3830
5	4040	32	20	41	-10	3956
COMP	2187					

	% EFF	
ATED	25.2	RATED NET HP/FUEL GROSS HP
NGP	100.1	NET NGP HP/NET RATED HP
CD	97.8	NET PCD HP/NET RATED HP
5	101.0	NET T5 HP/NET RATED HP
COMP	56.1	COMPRESSOR HP/AVERAGE NET HP
VERALL	14.1	COMPRESSOR HP/FUEL HP

#1 Unit
11/13/90

2:00 PM

GT - HANOVER COMPRESSOR STATION
SOLAR CENTAUR 3830 NATURAL GAS TURBINE/COMPRESSOR PERFORMANCE
DATE 14:46:08 TIME 11-13-1990

OPERATING CONDITIONS

UCTION PRESSURE	652	PSIG	FUEL FLOW	40	MMBTU/H
DISCHARGE PRESSURE	671	PSIG	PCD	121	PSIG
RESSURE RATIO	1.03		T5	1090	DEG F
UCTION TEMPERATURE	85	DEG F	NGP	100	%
DISCHARGE TEMPERATURE	111	DEG F	NPT	89	%
THROUGHPUT	12495	MMBTU/H	FUEL RATIO	0.3	% FUEL/THROUGHPUT
MBIENT TEMPERATURE	41	DEG F			

PERFORMANCE PARAMETERS

	GROSS HP BEFORE LOSSES	INLET LOSSES HP	EXHAUST LOSSES HP	NPT LOSSES HP	ELEV. LOSSES HP	NET HP AFTER LOSSES
UEL	15545					
ATED	3990	31	20	30	-9	3918
NGP	3993	31	20	30	-9	3921
CD	3841	30	19	21	-9	3780
5	4024	31	20	32	-10	3949
COMP	354					

	% EFF	
RATED	25.2	RATED NET HP/FUEL GROSS HP
NGP	100.1	NET NGP HP/NET RATED HP
CD	96.5	NET PCD HP/NET RATED HP
5	100.8	NET T5 HP/NET RATED HP
COMP	9.1	COMPRESSOR HP/AVERAGE NET HP
VERALL	2.3	COMPRESSOR HP/FUEL HP

#1 Unit

11/13/90

3:00 PM

AGT - HANOVER COMPRESSOR STATION
SOLAR CENTAUR 3830 NATURAL GAS TURBINE/COMPRESSOR PERFORMANCE
ATE 15:03:14 TIME 11-13-1990

OPERATING CONDITIONS

SUCTION PRESSURE	663	PSIG	FUEL FLOW	30	MMBTU/H
DISCHARGE PRESSURE	676	PSIG	PCD	82	PSIG
RESSURE RATIO	1.02		T5	800	DEG F
UCTION TEMPERATURE	86	DEG F	NGP	84	%
DISCHARGE TEMPERATURE	103	DEG F	NPT	64	%
HROUGHPUT	12529	MMBTU/H	FUEL RATIO	0.2	% FUEL/THROUGHPUT
MBIENT TEMPERATURE	41	DEG F			

PERFORMANCE PARAMETERS

	GROSS HP BEFORE LOSSES	INLET LOSSES HP	EXHAUST LOSSES HP	NPT LOSSES HP	ELEV. LOSSES HP	NET HP AFTER LOSSES
UEL	11853					
RATED	3990	31	20	408	-9	3486
NGP	1977	19	14	60	-5	1887
CD	2199	21	15	66	-5	2100
5	1999	19	14	62	-5	1907
COMP	240					

	% EFF	
RATED	29.4	RATED NET HP/FUEL GROSS HP
NGP	54.1	NET NGP HP/NET RATED HP
CD	60.2	NET PCD HP/NET RATED HP
T5	54.7	NET T5 HP/NET RATED HP
COMP	12.2	COMPRESSOR HP/AVERAGE NET HP
VERALL	2.0	COMPRESSOR HP/FUEL HP

1 Unit
11/13/90

3:25 PM

GT - HANOVER COMPRESSOR STATION
SOLAR CENTAUR 3830 NATURAL GAS TURBINE/COMPRESSOR PERFORMANCE
ATE 15:45:25 TIME 11-13-1990

OPERATING CONDITIONS

SUCTION PRESSURE	663	PSIG	FUEL FLOW	28	MMBTU/H
DISCHARGE PRESSURE	675	PSIG	PCD	77	PSIG
RESSURE RATIO	1.02		T5	780	DEG F
UCTION TEMPERATURE	79	DEG F	NGP	83	%
DISCHARGE TEMPERATURE	94	DEG F	NPT	61	%
HROUGHPUT	12627	MMBTU/H	FUEL RATIO	0.2	% FUEL/THROUGHPUT
MBIENT TEMPERATURE	41	DEG F			

PERFORMANCE PARAMETERS

	GROSS HP BEFORE LOSSES	INLET LOSSES HP	EXHAUST LOSSES HP	NPT LOSSES HP	ELEV. LOSSES HP	NET HP AFTER LOSSES
UEL	11180					
RATED	3990	31	20	475	-9	3396
NGP	1851	18	13	74	-4	1747
CD	0	0	0	0	0	0
5	1853	18	13	74	-4	1748
COMP	219					

	% EFF	
RATED	30.4	RATED NET HP/FUEL GROSS HP
NGP	51.5	NET NGP HP/NET RATED HP
CD	0.0	NET PCD HP/NET RATED HP
T5	51.5	NET T5 HP/NET RATED HP
COMP	18.8	COMPRESSOR HP/AVERAGE NET HP
VERALL	2.0	COMPRESSOR HP/FUEL HP

#1 Turbine
11/14/90 3:40 PM

GT - HANOVER COMPRESSOR STATION
SOLAR CENTAUR 3830 NATURAL GAS TURBINE/COMPRESSOR PERFORMANCE
DATE 17:47:21 TIME 11-14-1990

OPERATING CONDITIONS

UCTION PRESSURE	610	PSIG	FUEL FLOW	40	MMBTU/H
DISCHARGE PRESSURE	657	PSIG	PCD	122	PSIG
RESSURE RATIO	1.08		T5	1100	DEG F
UCTION TEMPERATURE	69	DEG F	NGP	100	%
DISCHARGE TEMPERATURE	87	DEG F	NPT	86	%
THROUGHPUT	29903	MMBTU/H	FUEL RATIO	0.1	% FUEL/THROUGHPUT
MBIENT TEMPERATURE	47	DEG F			

PERFORMANCE PARAMETERS

	GROSS HP BEFORE LOSSES	INLET LOSSES HP	EXHAUST LOSSES HP	NPT LOSSES HP	ELEV. LOSSES HP	NET HP AFTER LOSSES
UEL	15813					
ATED	3940	31	20	54	-9	3844
NGP	3944	31	20	54	-9	3848
CD	3922	31	20	52	-9	3828
5	3986	31	20	58	-9	3886
COMP	2123					

	% EFF	
ATED	24.3	RATED NET HP/FUEL GROSS HP
NGP	100.1	NET NGP HP/NET RATED HP
CD	99.6	NET PCD HP/NET RATED HP
5	101.1	NET T5 HP/NET RATED HP
COMP	55.1	COMPRESSOR HP/AVERAGE NET HP
VERALL	13.4	COMPRESSOR HP/FUEL HP

#1 Turbine

11/14/90 4:30 PM

GT - HANOVER COMPRESSOR STATION
SOLAR CENTAUR 3830 NATURAL GAS TURBINE/COMPRESSOR PERFORMANCE
DATE 17:42:11 TIME 11-14-1990

OPERATING CONDITIONS

UCTION PRESSURE	616	PSIG	FUEL FLOW	40	MMBTU/H
DISCHARGE PRESSURE	664	PSIG	PCD	122	PSIG
RESSURE RATIO	1.08		T5	1090	DEG F
UCTION TEMPERATURE	74	DEG F	NGP	100	%
DISCHARGE TEMPERATURE	93	DEG F	NPT	86	%
THROUGHPUT	29499	MMBTU/H	FUEL RATIO	0.1	% FUEL/THROUGHPUT
MBIENT TEMPERATURE	46	DEG F			

PERFORMANCE PARAMETERS

	GROSS HP BEFORE LOSSES	INLET LOSSES HP	EXHAUST LOSSES HP	NPT LOSSES HP	ELEV. LOSSES HP	NET HP AFTER LOSSES
UEL	15813					
ATED	3948	31	20	54	-9	3852
NGP	3952	31	20	54	-9	3856
CD	3919	31	20	51	-9	3826
5	3943	31	20	53	-9	3847
COMP	2143					

	% EFF	
ATED	24.4	RATED NET HP/FUEL GROSS HP
NGP	100.1	NET NGP HP/NET RATED HP
CD	99.3	NET PCD HP/NET RATED HP
5	99.9	NET T5 HP/NET RATED HP
COMP	55.8	COMPRESSOR HP/AVERAGE NET HP
OVERALL	13.6	COMPRESSOR HP/FUEL HP

#1 Turbine

11/14/90 5:00 PM

GT - HANOVER COMPRESSOR STATION
SOLAR CENTAUR 3830 NATURAL GAS TURBINE/COMPRESSOR PERFORMANCE
DATE 17:43:48 TIME 11-14-1990

OPERATING CONDITIONS

UCTION PRESSURE	619	PSIG	FUEL FLOW	41	MMBTU/H
DISCHARGE PRESSURE	670	PSIG	PCD	122	PSIG
RESSURE RATIO	1.08		T5	1090	DEG F
UCTION TEMPERATURE	74	DEG F	NGP	100	%
DISCHARGE TEMPERATURE	94	DEG F	NPT	86	%
THROUGHPUT	29640	MMBTU/H	FUEL RATIO	0.1	% FUEL/THROUGHPUT
MBIENT TEMPERATURE	44	DEG F			

PERFORMANCE PARAMETERS

	GROSS HP BEFORE LOSSES	INLET LOSSES HP	EXHAUST LOSSES HP	NPT LOSSES HP	ELEV. LOSSES HP	NET HP AFTER LOSSES
UEL	16081					
ATED	3965	31	20	55	-9	3868
NGP	3969	31	20	55	-9	3871
CD	3914	31	20	50	-9	3822
5	3975	31	20	56	-9	3877
COMP	2273					

	% EFF	
ATED	24.1	RATED NET HP/FUEL GROSS HP
NGP	100.1	NET NGP HP/NET RATED HP
CD	98.8	NET PCD HP/NET RATED HP
5	100.2	NET T5 HP/NET RATED HP
COMP	58.9	COMPRESSOR HP/AVERAGE NET HP
VERALL	14.1	COMPRESSOR HP/FUEL HP

#2 Turbine 7:15 AM
11/14/90

GT - HANOVER COMPRESSOR STATION
OLAR CENTAUR 3830 NATURAL GAS TURBINE/COMPRESSOR PERFORMANCE
DATE 08:21:38 TIME 11-14-1990

OPERATING CONDITIONS

UCTION PRESSURE	617	PSIG	FUEL FLOW	41	MMBTU/H
ISCHARGE PRESSURE	670	PSIG	PCD	124	PSIG
PRESSURE RATIO	1.08		T5	1090	DEG F
UCTION TEMPERATURE	72	DEG F	NGP	100	%
ISCHARGE TEMPERATURE	89	DEG F	NPT	87	%
THROUGHPUT	30672	MMBTU/H	FUEL RATIO	0.1	% FUEL/THROUGHPUT
MBIENT TEMPERATURE	33	DEG F			

PERFORMANCE PARAMETERS

	GROSS HP BEFORE LOSSES	INLET LOSSES HP	EXHAUST LOSSES HP	NPT LOSSES HP	ELEV. LOSSES HP	NET HP AFTER LOSSES
FUEL	16181					
ATED	4056	32	20	49	-10	3965
GP	4059	32	20	49	-10	3968
PCD	4011	31	20	45	-10	3924
5	4154	32	20	58	-10	4053
OMP	2437					

	% EFF	
ATED	24.5	RATED NET HP/FUEL GROSS HP
GP	100.1	NET NGP HP/NET RATED HP
PCD	99.0	NET PCD HP/NET RATED HP
5	102.2	NET T5 HP/NET RATED HP
OMP	61.2	COMPRESSOR HP/AVERAGE NET HP
OVERALL	15.1	COMPRESSOR HP/FUEL HP

#2 Turbine
11/14/90 8:00 AM

GT - HANOVER COMPRESSOR STATION
SOLAR CENTAUR 3830 NATURAL GAS TURBINE/COMPRESSOR PERFORMANCE
ATE 08:26:11 TIME 11-14-1990

OPERATING CONDITIONS

UCTION PRESSURE	615	PSIG	FUEL FLOW	41	MMBTU/H
DISCHARGE PRESSURE	666	PSIG	PCD	124	PSIG
RESSURE RATIO	1.08		T5	1080	DEG F
UCTION TEMPERATURE	74	DEG F	NGP	100	%
DISCHARGE TEMPERATURE	93	DEG F	NPT	87	%
HROUGHPUT	30497	MMBTU/H	FUEL RATIO	0.1	% FUEL/THROUGHPUT
MBIENT TEMPERATURE	35	DEG F			

PERFORMANCE PARAMETERS

	GROSS HP BEFORE LOSSES	INLET LOSSES HP	EXHAUST LOSSES HP	NPT LOSSES HP	ELEV. LOSSES HP	NET HP AFTER LOSSES
UEL	16181					
RATED	4040	32	20	48	-10	3949
NGP	4043	32	20	48	-10	3952
CD	4017	31	20	46	-10	3929
5	4061	32	20	50	-10	3969
COMP	2354					

	% EFF	
RATED	24.4	RATED NET HP/FUEL GROSS HP
NGP	100.1	NET NGP HP/NET RATED HP
CD	99.5	NET PCD HP/NET RATED HP
5	100.5	NET T5 HP/NET RATED HP
COMP	59.6	COMPRESSOR HP/AVERAGE NET HP
VERALL	14.5	COMPRESSOR HP/FUEL HP

#2 Turbine

11/14/90 9 AM

GT - HANOVER COMPRESSOR STATION
SOLAR CENTAUR 3830 NATURAL GAS TURBINE/COMPRESSOR PERFORMANCE
DATE 11:23:54 TIME 11-14-1990

OPERATING CONDITIONS

UCTION PRESSURE	612	PSIG	FUEL FLOW	41	MMBTU/H
DISCHARGE PRESSURE	661	PSIG	PCD	123	PSIG
RESSURE RATIO	1.08		T5	1080	DEG F
UCTION TEMPERATURE	74	DEG F	NGP	100	%
DISCHARGE TEMPERATURE	93	DEG F	NPT	87	%
THROUGHPUT	30499	MMBTU/H	FUEL RATIO	0.1	% FUEL/THROUGHPUT
MBIENT TEMPERATURE	36	DEG F			

PERFORMANCE PARAMETERS

	GROSS HP BEFORE LOSSES	INLET LOSSES HP	EXHAUST LOSSES HP	NPT LOSSES HP	ELEV. LOSSES HP	NET HP AFTER LOSSES
UEL	16181					
ATED	4031	32	20	48	-10	3941
NGP	4034	32	20	48	-10	3944
CD	3955	31	20	41	-9	3872
5	4045	32	20	49	-10	3954
COMP	2276					

	% EFF	
RATED	24.4	RATED NET HP/FUEL GROSS HP
NGP	100.1	NET NGP HP/NET RATED HP
CD	98.2	NET PCD HP/NET RATED HP
5	100.3	NET T5 HP/NET RATED HP
COMP	58.0	COMPRESSOR HP/AVERAGE NET HP
VERALL	14.1	COMPRESSOR HP/FUEL HP

#2 Turbine

11/14/90 10 AM

GT - HANOVER COMPRESSOR STATION
SOLAR CENTAUR 3830 NATURAL GAS TURBINE/COMPRESSOR PERFORMANCE
ATE 11:26:30 TIME 11-14-1990

OPERATING CONDITIONS

UCTION PRESSURE	610	PSIG	FUEL FLOW	41	MMBTU/H
DISCHARGE PRESSURE	658	PSIG	PCD	123	PSIG
RESSURE RATIO	1.08		T5	1090	DEG F
UCTION TEMPERATURE	74	DEG F	NGP	100	%
DISCHARGE TEMPERATURE	91	DEG F	NPT	87	%
HROUGHPUT	30486	MMBTU/H	FUEL RATIO	0.1	% FUEL/THROUGHPUT
MBIENT TEMPERATURE	39	DEG F			

PERFORMANCE PARAMETERS

	GROSS HP BEFORE LOSSES	INLET LOSSES HP	EXHAUST LOSSES HP	NPT LOSSES HP	ELEV. LOSSES HP	NET HP AFTER LOSSES
UEL	16181					
RATED	4006	31	20	47	-10	3917
NGP	4010	31	20	47	-10	3920
CD	3964	31	20	43	-9	3879
5	4056	32	20	51	-10	3962
COMP	2237					

	% EFF	
RATED	24.2	RATED NET HP/FUEL GROSS HP
NGP	100.1	NET NGP HP/NET RATED HP
CD	99.0	NET PCD HP/NET RATED HP
5	101.2	NET T5 HP/NET RATED HP
COMP	57.1	COMPRESSOR HP/AVERAGE NET HP
VERALL	13.8	COMPRESSOR HP/FUEL HP

#2 Turbine

11/14/90 11 AM

GT - HANOVER COMPRESSOR STATION
SOLAR CENTAUR 3830 NATURAL GAS TURBINE/COMPRESSOR PERFORMANCE
ATE 11:29:21 TIME 11-14-1990

OPERATING CONDITIONS

SUCTION PRESSURE	608	PSIG	FUEL FLOW	41	MMBTU/H
DISCHARGE PRESSURE	657	PSIG	PCD	122	PSIG
RESSURE RATIO	1.08		T5	1090	DEG F
UCTION TEMPERATURE	74	DEG F	NGP	100	%
DISCHARGE TEMPERATURE	93	DEG F	NPT	87	%
HROUGHPUT	30277	MMBTU/H	FUEL RATIO	0.1	% FUEL/THROUGHPUT
MBIENT TEMPERATURE	42	DEG F			

PERFORMANCE PARAMETERS

	GROSS HP BEFORE LOSSES	INLET LOSSES HP	EXHAUST LOSSES HP	NPT LOSSES HP	ELEV. LOSSES HP	NET HP AFTER LOSSES
UEL	16181					
RATED	3981	31	20	46	-9	3893
NGP	3985	31	20	46	-9	3897
CD	3908	31	20	40	-9	3827
5	4008	31	20	48	-10	3917
COMP	2274					

	% EFF	
RATED	24.1	RATED NET HP/FUEL GROSS HP
NGP	100.1	NET NGP HP/NET RATED HP
CD	98.3	NET PCD HP/NET RATED HP
T5	100.6	NET T5 HP/NET RATED HP
COMP	58.6	COMPRESSOR HP/AVERAGE NET HP
VERALL	14.1	COMPRESSOR HP/FUEL HP

#2 Turbine
11/14/90 12:30 PM

GT - HANOVER COMPRESSOR STATION
SOLAR CENTAUR 3830 NATURAL GAS TURBINE/COMPRESSOR PERFORMANCE
DATE 14:28:46 TIME 11-14-1990

OPERATING CONDITIONS

UCTION PRESSURE	604	PSIG	FUEL FLOW	41	MMBTU/H
DISCHARGE PRESSURE	652	PSIG	PCD	122	PSIG
RESSURE RATIO	1.08		T5	1100	DEG F
UCTION TEMPERATURE	72	DEG F	NGP	100	%
DISCHARGE TEMPERATURE	90	DEG F	NPT	87	%
THROUGHPUT	30230	MMBTU/H	FUEL RATIO	0.1	% FUEL/THROUGHPUT
MBIENT TEMPERATURE	45	DEG F			

PERFORMANCE PARAMETERS

	GROSS HP BEFORE LOSSES	INLET LOSSES HP	EXHAUST LOSSES HP	NPT LOSSES HP	ELEV. LOSSES HP	NET HP AFTER LOSSES
UEL	16181					
ATED	3957	31	20	45	-9	3870
NGP	3960	31	20	45	-9	3873
CD	3916	31	20	42	-9	3833
5	4019	31	20	50	-10	3926
COMP	2230					

	% EFF	
ATED	23.9	RATED NET HP/FUEL GROSS HP
NGP	100.1	NET NGP HP/NET RATED HP
CD	99.1	NET PCD HP/NET RATED HP
5	101.5	NET T5 HP/NET RATED HP
COMP	57.5	COMPRESSOR HP/AVERAGE NET HP
VERALL	13.8	COMPRESSOR HP/FUEL HP

#2 Turbine

11/14/90 1:00 PM

GT - HANOVER COMPRESSOR STATION
SOLAR CENTAUR 3830 NATURAL GAS TURBINE/COMPRESSOR PERFORMANCE
ATE 14:26:26 TIME 11-14-1990

OPERATING CONDITIONS

UCTION PRESSURE	602 PSIG	FUEL FLOW	41 MMBTU/H
DISCHARGE PRESSURE	650 PSIG	PCD	122 PSIG
RESSURE RATIO	1.08	T5	1100 DEG F
UCTION TEMPERATURE	74 DEG F	NGP	100 %
DISCHARGE TEMPERATURE	94 DEG F	NPT	87 %
HROUGHPUT	29857 MMBTU/H	FUEL RATIO	0.1 % FUEL/THROUGHPUT
MBIENT TEMPERATURE	46 DEG F		

PERFORMANCE PARAMETERS

	GROSS HP BEFORE LOSSES	INLET LOSSES HP	EXHAUST LOSSES HP	NPT LOSSES HP	ELEV. LOSSES HP	NET HP AFTER LOSSES
UEL	16181					
ATED	3948	31	20	45	-9	3862
NGP	3952	31	20	45	-9	3865
CD	3919	31	20	42	-9	3835
5	4003	31	20	49	-9	3911
COMP	2221					

	% EFF	
ATED	23.9	RATED NET HP/FUEL GROSS HP
NGP	100.1	NET NGP HP/NET RATED HP
CD	99.3	NET PCD HP/NET RATED HP
5	101.3	NET T5 HP/NET RATED HP
COMP	57.4	COMPRESSOR HP/AVERAGE NET HP
VERALL	13.7	COMPRESSOR HP/FUEL HP

#2 Turbine
11/14/90 2:00 PM

AGT - HANOVER COMPRESSOR STATION
SOLAR CENTAUR 3830 NATURAL GAS TURBINE/COMPRESSOR PERFORMANCE
DATE 14:22:27 TIME 11-14-1990

OPERATING CONDITIONS

SUCTION PRESSURE	602 PSIG	FUEL FLOW	41 MMBTU/H
DISCHARGE PRESSURE	650 PSIG	PCD	121 PSIG
PRESSURE RATIO	1.08	T5	1100 DEG F
SUCTION TEMPERATURE	76 DEG F	NGP	100 %
DISCHARGE TEMPERATURE	96 DEG F	NPT	87 %
THROUGHPUT	29596 MMBTU/H	FUEL RATIO	0.1 % FUEL/THROUGHPUT
AMBIENT TEMPERATURE	47 DEG F		

PERFORMANCE PARAMETERS

	GROSS HP BEFORE LOSSES	INLET LOSSES HP	EXHAUST LOSSES HP	NPT LOSSES HP	ELEV. LOSSES HP	NET HP AFTER LOSSES
FUEL	16181					
RATED	3940	31	20	45	-9	3854
NGP	3944	31	20	45	-9	3857
PCD	3858	31	19	38	-9	3779
T5	3986	31	20	48	-9	3896
COMP	2212					

	% EFF	
RATED	23.8	RATED NET HP/FUEL GROSS HP
NGP	100.1	NET NGP HP/NET RATED HP
PCD	98.1	NET PCD HP/NET RATED HP
T5	101.1	NET T5 HP/NET RATED HP
COMP	57.5	COMPRESSOR HP/AVERAGE NET HP
OVERALL	13.7	COMPRESSOR HP/FUEL HP

APPENDIX E

Calculations

CALCULATIONS

ALL PARAMETERS

1) Actual gas CONCENTRATION

$$CONC._{ACTUAL} = \left(CONC._{\substack{STRIPCHART \\ AVERAGE}} - \text{zero cal.}\right)\frac{\text{Actual gas bottle conc.}}{(\text{Upscale cal.} - \text{zero cal.})}$$

EXAMPLE: TEST #1 UNIT #1 NO_x

$$ppm = (74.5 - 0.0)\frac{(143)}{(135.1 - 0.0)}$$

$$ppm = 78.9$$

2) Emission Rate

$$lbs/hr = ppm \times DSCFM \times \text{Molecular weight} \times 15.58 \times 10^{-8}$$

EXAMPLE: TEST #1 UNIT #1 NO_x as NO

$$lbs/hr = (78.9)(37500)(30)(15.58 \times 10^{-8})$$

$$lbs/hr = 13.8$$

N_x ONLY

3 CONCENTRATION CORRECTED TO 15% OXYGEN

$$10_{x\,15\%\,O_2} = (NO_x\,ppm)\left(\frac{20.9 - 15.0}{20.9 - O_2}\right)$$

EXAMPLE TEST #1 UNIT #1

$$= (78.9)\left(\frac{20.9 - 15.0}{20.9 - 17.0}\right)$$

$$= 125.8\,ppm$$

4. ISO K factor

$$\text{ISO K FACTOR} = \left(\frac{\text{combustor inlet pressure}_{ref}}{\text{combustor inlet pressure}_{amb}}\right)^{0.5}\left(e^{19(\text{humidity}_{ambient} - 0.00633)}\right) \times \left(\frac{288°K}{T_{amb}\,°K}\right)^{1.53}$$

EXAMPLE: TEST #1 UNIT #1

$\text{combustor inlet pressure}_{amb} = 122\text{ psi} = 248.4\text{ in Hg}$

$\text{Combustor inlet pressure ref} = 248.4\text{ in Hg}\,\frac{(30.05\text{ in Hg})}{(29.92\text{ in Hg})} = 249.5$

$$\text{humidity}_{ambient} = \frac{\%\text{ Relative humidity}}{100}\left[\frac{\text{Saturation vapor pressure}^{*}}{1.61\,(\text{Combustor inlet pressure}_{amb} - \text{saturation vapor press})}\right]$$

$$= \frac{40}{100}\left[\frac{0.274}{1.61\,(248.4 - 0.274)}\right]$$

$$= 0.000274$$

$$\text{ISO K FACTOR} = \left(\frac{249.5}{248.4}\right)^{0.5}\left(e^{19(0.000274 - 0.00633)}\right)\left(\frac{288\,°K}{277.4\,°K}\right)^{1.53}$$

$$= 0.946$$

5. NO_x CONCENTRATION CORRECTED TO 15% oxygen at ISO CONDITIONS

$$NO_{x\,@\,15\%\,O_2\,@\,ISO} = \left(NO_{x\,@\,15\%\,O_2}\right)\left(\text{ISO K FACTOR}\right)$$

EXAMPLE TEST #1 UNIT #1

$$= (125.8)(0.946)$$

$$= 119.0\text{ ppm}$$

* see table on next page

APPENDIX F

CEM Data Summary

CEM DATA

AVERAGE PPM BEFORE CALIBRATION BIAS ADJUSTMENT

UNIT #1

TEST #1

NOX = 74.5 CO = 6.7 THC = 0.3 O_2 = 17.2

TEST #2

NOX = 51.6 CO = 7.6 THC = 2.5 O_2 = 18.1

TEST #3

NOX = 88.0 CO = 7.8 THC = 0.2 O_2 = 17.2

UNIT #2

TEST #1

NOX = 63.3 CO = 8.2 THC = 0.3 O_2 = 17.6

TEST #2

NOX = 72.3 CO = 6.9 THC = 0.1 O_2 = 17.1

TEST #3

NOX = 71.6 CO = 9.2 THC = 0.2 O_2 = 17.1

CHEMICAL ENGINEERS HANDBOOK.

VAPOR PRESSURES OF PURE SUBSTANCES

Table 3-3. Vapor Pressure of Water Ice from −15° to 0°C.*

Mm. Hg.

t, °C.	0.0	0.1	0.2	0.3	0.4	0.5	0.6	0.7	0.8	0.9
−14	1.361	1.348	1.336	1.374	1.312	1.399	1.289	1.276	1.264	1.253
−13	1.490	1.477	1.464	1.450	1.437	1.424	1.411	1.399	1.386	1.373
−12	1.632	1.617	1.602	1.589	1.574	1.559	1.546	1.532	1.518	1.504
−11	1.785	1.769	1.753	1.737	1.722	1.707	1.691	1.676	1.661	1.646
−10	1.950	1.934	1.916	1.899	1.883	1.866	1.849	1.833	1.817	1.801
−9	2.131	2.112	2.093	2.075	2.057	2.039	2.021	2.003	1.985	1.968
−8	2.326	2.306	2.285	2.266	2.246	2.226	2.207	2.187	2.168	2.149
−7	2.537	2.515	2.493	2.472	2.450	2.429	2.408	2.387	2.367	2.346
−6	2.765	2.742	2.718	2.695	2.672	2.649	2.626	2.603	2.581	2.559
−5	3.013	2.987	2.962	2.937	2.912	2.887	2.862	2.838	2.813	2.790
−4	3.280	3.252	3.225	3.199	3.171	3.144	3.117	3.091	3.065	3.039
−3	3.568	3.539	3.509	3.480	3.451	3.422	3.393	3.364	3.336	3.309
−2	3.880	3.848	3.816	3.785	3.753	3.722	3.691	3.660	3.630	3.599
−1	4.217	4.182	4.147	4.113	4.079	4.045	4.012	3.979	3.946	3.913
−0	4.579	4.542	4.504	4.467	4.431	4.395	4.359	4.323	4.287	4.252

* For data at 0(0.2)−30(2)−90°C., see p. 2324, "Handbook of Chemistry and Physics," 40th ed., Chemical Rubber Publishing Co.

Table 3-4. Vapor Pressure of Liquid Water from −16° to 0°C.*

Mm. Hg.

t, °C.	0.0	0.1	0.2	0.3	0.4	0.5	0.6	0.7	0.8	0.9
−15	1.458	1.435	1.414	1.492	1.370	1.379	1.368	1.356	1.345	1.334
−14	1.568	1.547	1.534	1.522	1.511	1.497	1.483	1.472	1.460	1.449
−13	1.691	1.678	1.665	1.651	1.637	1.624	1.611	1.599	1.585	1.572
−12	1.834	1.819	1.804	1.790	1.776	1.761	1.748	1.734	1.720	1.705
−11	1.987	1.971	1.955	1.939	1.924	1.909	1.893	1.878	1.863	1.848
−10	2.149	2.134	2.116	2.099	2.084	2.067	2.050	2.034	2.018	2.001
−9	2.326	2.307	2.289	2.271	2.254	2.236	2.219	2.201	2.184	2.167
−8	2.514	2.495	2.475	2.456	2.437	2.418	2.399	2.380	2.362	2.343
−7	2.715	2.695	2.674	2.654	2.633	2.613	2.593	2.572	2.553	2.533
−6	2.931	2.909	2.887	2.866	2.843	2.822	2.800	2.778	2.757	2.736
−5	3.163	3.139	3.115	3.092	3.069	3.046	3.022	3.000	2.976	2.955
−4	3.410	3.384	3.359	3.334	3.309	3.284	3.259	3.235	3.211	3.187
−3	3.673	3.647	3.620	3.593	3.567	3.540	3.514	3.487	3.461	3.436
−2	3.956	3.927	3.898	3.871	3.841	3.813	3.785	3.757	3.730	3.702
−1	4.258	4.227	4.199	4.165	4.135	4.105	4.075	4.045	4.016	3.986
−0	4.579	4.546	4.513	4.480	4.449	4.419	4.385	4.353	4.320	4.289

* Computed from the above table with the aid of the thermodynamic equation

$$\log_{10}\frac{p_w}{p_i} = \frac{-1.1489}{273.1+t} - 1.330\times10^{-4}t + 9.084\times10^{-8}t^2$$

Table 3-5. Vapor Pressure of Liquid Water from 0° to 100°C.*

Mm. Hg.

t, °C.	0.0	0.1	0.2	0.3	0.4	0.5	0.6	0.7	0.8	0.9
0	4.579	4.613	4.647	4.681	4.715	4.750	4.785	4.820	4.855	4.890
1	4.926	4.962	4.998	5.034	5.070	5.107	5.144	5.181	5.219	5.256
2	5.294	5.332	5.370	5.408	5.447	5.486	5.525	5.565	5.605	5.645
3	5.685	5.725	5.766	5.807	5.848	5.889	5.931	5.973	6.015	6.058
4	6.101	6.144	6.187	6.230	6.274	6.318	6.363	6.408	6.453	6.498
5	6.543	6.589	6.635	6.681	6.728	6.775	6.822	6.869	6.917	6.965
6	7.013	7.062	7.111	7.160	7.209	7.259	7.309	7.360	7.411	7.462
7	7.513	7.565	7.617	7.669	7.722	7.775	7.828	7.882	7.936	7.990
8	8.045	8.100	8.155	8.211	8.267	8.323	8.380	8.437	8.494	8.551
9	8.609	8.668	8.727	8.786	8.845	8.905	8.965	9.025	9.086	9.147

Table 3-5. Vapor Pressure of Liquid Water from 0° to 100°C.*—(Concluded)

t, °C.	0.0	0.1	0.2	0.3	0.4	0.5	0.6	0.7	0.8	0.9
10	9.209	9.271	9.333	9.395	9.458	9.521	9.585	9.649	9.714	9.779
11	9.844	9.910	9.976	10.042	10.109	10.176	10.244	10.312	10.380	10.449
12	10.518	10.588	10.658	10.728	10.799	10.870	10.941	11.013	11.085	11.158
13	11.231	11.305	11.379	11.453	11.528	11.604	11.680	11.756	11.833	11.910
14	11.987	12.065	12.144	12.223	12.302	12.382	12.462	12.543	12.624	12.706
15	12.788	12.870	12.953	13.037	13.121	13.205	13.290	13.375	13.461	13.547
16	13.634	13.721	13.809	13.898	13.987	14.076	14.166	14.256	14.347	14.438
17	14.530	14.622	14.715	14.809	14.903	14.997	15.092	15.188	15.284	15.380
18	15.477	15.575	15.673	15.772	15.871	15.971	16.071	16.171	16.272	16.374
19	16.477	16.581	16.685	16.789	16.894	16.999	17.105	17.212	17.319	17.427
20	17.535	17.644	17.753	17.863	17.974	18.085	18.197	18.309	18.422	18.536
21	18.650	18.765	18.880	18.996	19.113	19.231	19.349	19.468	19.587	19.707
22	19.827	19.948	20.070	20.193	20.316	20.440	20.565	20.690	20.815	20.941
23	21.068	21.196	21.324	21.453	21.583	21.714	21.845	21.977	22.110	22.243
24	22.377	22.512	22.648	22.785	22.922	23.060	23.198	23.337	23.476	23.616
25	23.756	23.897	24.039	24.182	24.326	24.471	24.617	24.764	24.912	25.060
26	25.209	25.359	25.509	25.660	25.812	25.964	26.117	26.271	26.426	26.582
27	26.739	26.897	27.055	27.214	27.374	27.535	27.696	27.858	28.021	28.185
28	28.349	28.514	28.680	28.847	29.015	29.184	29.354	29.525	29.697	29.870
29	30.043	30.217	30.392	30.568	30.745	30.923	31.102	31.281	31.461	31.642
30	31.824	32.007	32.191	32.376	32.561	32.747	32.934	33.122	33.312	33.503
31	33.695	33.888	34.082	34.276	34.471	34.667	34.864	35.062	35.261	35.462
32	35.663	35.865	36.068	36.272	36.477	36.683	36.891	37.099	37.308	37.518
33	37.729	37.942	38.155	38.369	38.584	38.801	39.018	39.237	39.457	39.677
34	39.898	40.121	40.344	40.569	40.796	41.023	41.251	41.480	41.710	41.942
35	42.175	42.409	42.644	42.880	43.117	43.355	43.595	43.836	44.078	44.320
36	44.563	44.808	45.054	45.301	45.549	45.799	46.050	46.302	46.556	46.811
37	47.067	47.324	47.582	47.841	48.102	48.364	48.627	48.891	49.157	49.424
38	49.692	49.961	50.231	50.502	50.774	51.048	51.323	51.600	51.879	52.160
39	52.442	52.725	53.009	53.294	53.580	53.867	54.156	54.446	54.737	55.030
40	55.324	55.61	55.91	56.21	56.51	56.81	57.11	57.41	57.72	58.03
41	58.34	58.65	58.96	59.27	59.58	59.90	60.22	60.54	60.86	61.18
42	61.50	61.82	62.14	62.47	62.80	63.13	63.46	63.79	64.12	64.46
43	64.80	65.14	65.48	65.82	66.16	66.51	66.86	67.21	67.56	67.91
44	68.26	68.61	68.97	69.33	69.69	70.05	70.41	70.77	71.14	71.51
45	71.88	72.25	72.62	72.99	73.36	73.74	74.12	74.50	74.88	75.26
46	75.65	76.04	76.43	76.82	77.21	77.60	78.00	78.40	78.80	79.20
47	79.60	80.00	80.41	80.82	81.23	81.64	82.05	82.46	82.87	83.29
48	83.71	84.13	84.56	84.99	85.42	85.85	86.28	86.71	87.14	87.58
49	88.02	88.46	88.90	89.34	89.79	90.24	90.69	91.14	91.59	92.05

t, °C.	0	1	2	3	4	5	6	7	8	9
50	92.51	97.30	102.09	107.20	112.51	118.04	123.80	129.82	136.08	142.60
60	149.38	156.43	163.77	171.38	179.31	187.54	196.09	204.96	214.17	223.73
70	233.7	243.9	254.6	265.7	277.2	289.1	301.4	314.1	327.3	341.0
80	355.1	369.7	384.9	400.6	416.8	433.6	450.9	468.7	487.1	506.1
90	525.76	527.76	529.77	531.78	533.80	535.82	537.86	539.90	541.95	544.00
91	546.05	548.11	550.18	552.26	554.35	556.44	558.53	560.64	562.75	564.87
92	566.99	569.12	571.26	573.40	575.55	577.71	579.87	582.04	584.22	586.41
93	588.60	590.80	593.00	595.21	597.43	599.66	601.89	604.13	606.38	608.64
94	610.90	613.17	615.44	617.72	620.01	622.31	624.61	626.92	629.24	631.57
95	633.90	636.24	638.59	640.94	643.30	645.67	648.05	650.43	652.82	655.22
96	657.62	660.03	662.45	664.88	667.31	669.75	672.20	674.66	677.12	679.69
97	682.07	684.55	687.04	689.54	692.05	694.57	697.10	699.63	702.17	704.71
98	707.27	709.83	712.40	714.98	717.56	720.15	722.75	725.36	727.98	730.61
99	733.24	735.88	738.53	741.18	743.85	746.52	749.20	751.89	754.58	757.29
100	760.00	762.72	765.45	768.19	770.93	773.68	776.44	779.22	782.00	784.78
101	787.57	790.37	793.18	796.00	798.82	801.66	804.50	807.35	810.21	813.08

* From the Physikalisch-technische Reichsanstalt, Halborn, Scheel, and Henning, "Wärmetabellen," Friedrich Vieweg & Sohn, Brunswick, 1909. By permission. For data at 50(0.2) 101.8°C., see "Handbook of Chemistry and Physics," 40th ed., p. 2326, Chemical Rubber Publishing Co. For a tabulation of temperature for pressures 700(1)779 mm. Hg, see Atack, "Handbook of Chemical Data," p. 117, Reinhold, New York, 1957. For a tabulation of pressure for 0(1)100(10)370°C., see Atack, p. 134, and for 100(1)374°C., see "Handbook of Chemistry and Physics," 40th ed., pp. 2328–2330, Chemical Rubber Publishing Co.

Table 3-6. Vapor Pressures of Inorganic Compounds, above 1 Atm.*

Compound		Pressure, atm.									Critical point	
Name	Formula	1	2	5	10	20	30	40	50	60	t_c, °C.	P_c, atm.
		Temperature, °C.										
Ammonia	NH_3	−33.6	−18.7	+4.7	25.7	50.1	66.1	78.9	89.3	98.3	132.4	111.5
Carbon monoxide	CO	−191.5	−183.5	−170.7	−161.0	−149.7	−141.9	.....	.....	.....	−138.7	34.6
dioxide	CO_2	−78.2	−69.1	−56.7	−39.5	−18.9	−5.3	+5.9	14.9	22.4	31.1	73.0
disulfide	CS_2	46.5	69.1	104.8	136.5	175.5	201.5	222.8	240.0	256.0	273.0	72.9
Chlorine	Cl_2	−33.8	−16.9	+10.3	35.6	65.0	84.8	101.6	115.2	127.1	144.0	76.1
para-Hydrogen	H_2	−252.5	−250.2	−246.0	−241.8	.....	.....	.....	.....	.....	−240.0	12.88
Hydrogen bromide	HBr	−66.5	−51.5	−29.1	−8.4	+16.8	33.9	46.1	60.0	70.6	90.0	84.4
chloride	HCl	−84.8	−71.4	−50.5	−31.7	−8.8	+5.9	17.8	27.9	36.2	51.4	81.6
cyanide	HCN	25.9	45.8	75.8	102.7	135.0	153.8	169.9	183.5	.....	183.5	50.0
Water	H-O	100.0	120.1	152.4	180.5	213.1	234.6	251.1	264.7	276.5	374.2	218.0
Hydrogen sulfide	H_2S	−60.4	−45.9	−22.3	−0.4	+25.5	41.9	55.0	66.7	76.3	100.3	88.9
Krypton	Kr	−152.0	−143.5	−130.0	−118.0	−101.7	−88.8	−78.4	−66.5	.....	−63	54
Nitrogen	N_2	−195.8	−189.2	−179.1	−169.8	−157.6	−148.3	.....	.....	.....	−147.2	33.5
Oxygen	O_2	−183.1	−176.0	−164.5	−153.2	−140.0	−130.7	−124.1	.....	.....	−118.9	49.7
Sulfur dioxide	SO_2	−10.0	+6.3	32.1	55.5	83.8	102.6	118.0	130.2	141.7	157.2	77.7
trioxide	SO_3	44.8	60.0	82.5	104.0	138.0	157.8	175.0	187.8	198.0	218.3	83.6

* Compiled from the extended tables published by D. R. Stull in *Ind. Eng. Chem.*, 39, 517 (1947).