Note: This is a reference cited in *AP 42, Compilation of Air Pollutant Emission Factors, Volume I Stationary Point and Area Sources.* AP42 is located on the EPA web site at www.epa.gov/ttn/chief/ap42/

The file name refers to the reference number, the AP42 chapter and section. The file name "ref02_c01s02.pdf" would mean the reference is from AP42 chapter 1 section 2. The reference may be from a previous version of the section and no longer cited. The primary source should always be checked.

MMSD - South Shore Plant

25

STAPPA/ALAPCO

2.5

logged 06/12/86

#19

ENTROPY ENVIRONMENTALISTS, INC.

SPECIALISTS IN AIR POLLUTION MEASUREMENT & MANAGEMENT

NOV, 1980

STATIONARY SOURCE SAMPLING REPORT

Sludge Inc.

CITY OF MILWAUKEE SOUTH SHORE TREATMENT PLANT

MILWAUKEE, WISCONSIN

PARTICULATE EMISSIONS COMPLIANCE TESTING

NICHOLS HERRESHOFF SLUDGE INCINERATOR

performed for

NICHOLS ENGINEERING & RESEARCH CORPORATION

NOVEMBER 1980

P.O. Box 12291, Research Triangle Park, North Carolina 27709
Phone 919-781-3550

REPORT CERTIFICATION

The sampling and analysis performed for this report was carried out under my direction and supervision.

Date November 21, 1980 Signature Willis S. Nesbit

Willis S. Nesbit

I have reviewed all testing details and results in this test report and hereby certify that the test report is authentic and accurate.

Date November 21, 1980 Signature

D. James Grove, P. E.

TABLE OF CONTENTS


| SECTION | PAGE |
|---|---|
| INTRODUCTION | 1 |
| SUMMARY OF RESULTS | 2 |
| PROCESS DESCRIPTION AND OPERATION | 5 |
| SAMPLING AND ANALYTICAL PROCEDURES | 7 |
| APPENDICES | 10 |

A - Particulate Results and Example Calculations

B - Field and Analytical Data

C - Process Data

D - Test Participants

E - Sampling and Analytical Procedures

F - Calibration Data

# INTRODUCTION

Stationary source sampling was performed at the City of Milwaukee's South Shore Waste Water Treatment Plant, on November 5, 1980. Three EPA Method 5 tests to determine the particulate emissions were performed in the outlet stack of the Nichols Herreschoff Sludge Incinerator. Also, mercury analyses of three sludge samples were performed to determine the mercury emissions. Joseph Perez from the State of Wisconsin Department of Natural Resources was present to observe the testing.

Immediately following is the "Summary of Results" section which presents the test results. For a detailed account of each particulate test, refer to Appendix A. A description of the source and an air flow schematic are given in the "Process Description and Operation" section. The last section, "Sampling and Analytical Procedures," briefly describes the sampling strategy used. For a detailed description of the equipment and procedures, see Appendix E. Pertinent calibration data is presented in Appendix F.

# Test One

## SUMMARY OF RESULTS

Table 1 below presents a summary of the particulate emissions and process information. The average particulate discharge was 3.3 pounds per ton of dry sludge. Mercury emissions averaged 38.8 grams per day; this was calculated using the maximum observed feed rate of 669.5 pounds per hour of dry sludge.

A summary of the three particulate tests is presented in Table 2. For a detailed account of each test, see Appendix A. Table 3 presents the analytical results of the three sludge samples corresponding to the three particulate tests and the three sludge samples for the mercury analyses. Analysis of the particulate catch from test #3 for % hexane extractable resulted in a value of 24%, dry basis.

TABLE 1

PARTICULATE EMISSIONS AND PROCESS INFORMATION

| Test Number | Particulates lbs/hr | Wet Sludge lbs/hr | Dry[1] Sludge Percent | Dry Sludge lbs/hr | Particulates[2] Discharge lbs/dry ton |
|---|---|---|---|---|---|
| 1 | 0.31 | 1076 | 42.7 | 459.5 | 1.35 |
| 2 | 0.92 | 1372 | 48.8 | 669.5 | 2.75 |
| 3 | 1.51 | 1140 | 46.87 | 533.5 | 5.66 |
| Average | 0.913 | 1196 | 46.1 | 554.2 | 3.25 |

[1] 100 - % moisture from Table 3

[2] $\text{lbs/ton} = \frac{2000 \text{ lbs/ton} \times \text{particualate lbs/hr}}{\text{dry sludge lbs/hr}}$

TABLE 2 Test One

PARTICULATE TESTS SUMMARY OF RESULTS

Grit Incinerator Outlet

| | 1 | 2 | 3 |
|---|---|---|---|
| DATE | 11/ 5/80 | 11/ 5/80 | 11/ 5/80 |
| STACK TEMPERATURE, DEG. F | 123. | 122. | 122. |
| STACK FLOW RATE SCFM* DRY (41% ave) | 4076. | 4120. | 4191. |
| STACK FLOW RATE ACFM, WET | 4696. | 4783. | 4841. |
| VOLUME OF GAS SAMPLED SCF* DRY | 67.26 | 68.60 | 70.33 |
| PERCENT EXCESS AIR | 690. | 577. | 605. |
| PERCENT ISOKINETIC | 98.4 | 98.4 | 100.0 |
| METHOD 5 RESULTS: | | | |
| MILLIGRAMS CATCH | 38.8 | 115.6 | 191.9 |
| GRAINS PER DSCF* | .0089 | .0260 | .0421 |
| POUNDS PER HOUR | .31 | .92 | 1.51 |

* 68 DEG F, 29.92 IN. HG

TABLE 3 Test One

SLUDGE ANALYSES RESULTS
(dry basis)

| | Particulate Tests Sludge Samples | | | |
|---|---|---|---|---|
| | 1 | 2 | 3 | Ash Sample |
| Moisture, % | 57.3 | 51.2 | 53.3 | <0.01 |
| Volatiles, % | 74.5 | 45.8 | 48.2 | 9.30 |
| Hexane Extractable, % | 4.8 | 6.5 | 4.4 | - |
| Btu/pound composite 1, 2, and 3 | | 2768 | | |

| | Mercury Test Sludge Samples | | |
|---|---|---|---|
| | A | B | C |
| Moisture, % | 53.6 | 51.7 | 56.8 |
| Volatiles, % | 55.7 | 86.0 | 76.9 |
| Mercury, ppm = ug/g | 8 | 4 | 4 |

ave 5.33 ug/g

## PROCESS DESCRIPTION AND OPERATION

The Waste Water Treatment Plant in Milwaukee, Wisconsin operates a Nichols Herreschoff Sludge Incinerator. The incinerator consists of six vertically stacked hearths. Material is fed into the top hearth and is moved from hearth to hearth by a center shaft with attached arms and teeth which divert the flow of material through the incinerator. Air is forced through the center shaft and arms to protect them from the high temperatures in the incinerator. Once through the incinerator, this cooling air enters the stack prior to the test ports.

From the incinerator, the gases pass through a venturi-scrubber system and an induced draft fan before reaching the stack, as shown in Figure 1. During the testing, the furnace feed rates for runs 1, 2, and 3 were 1076, 1372, and 1140 wet pounds per hour, respectively. The average moisture content was 53.9 percent. Appendix C contains process data taken by Nichols during the testing.

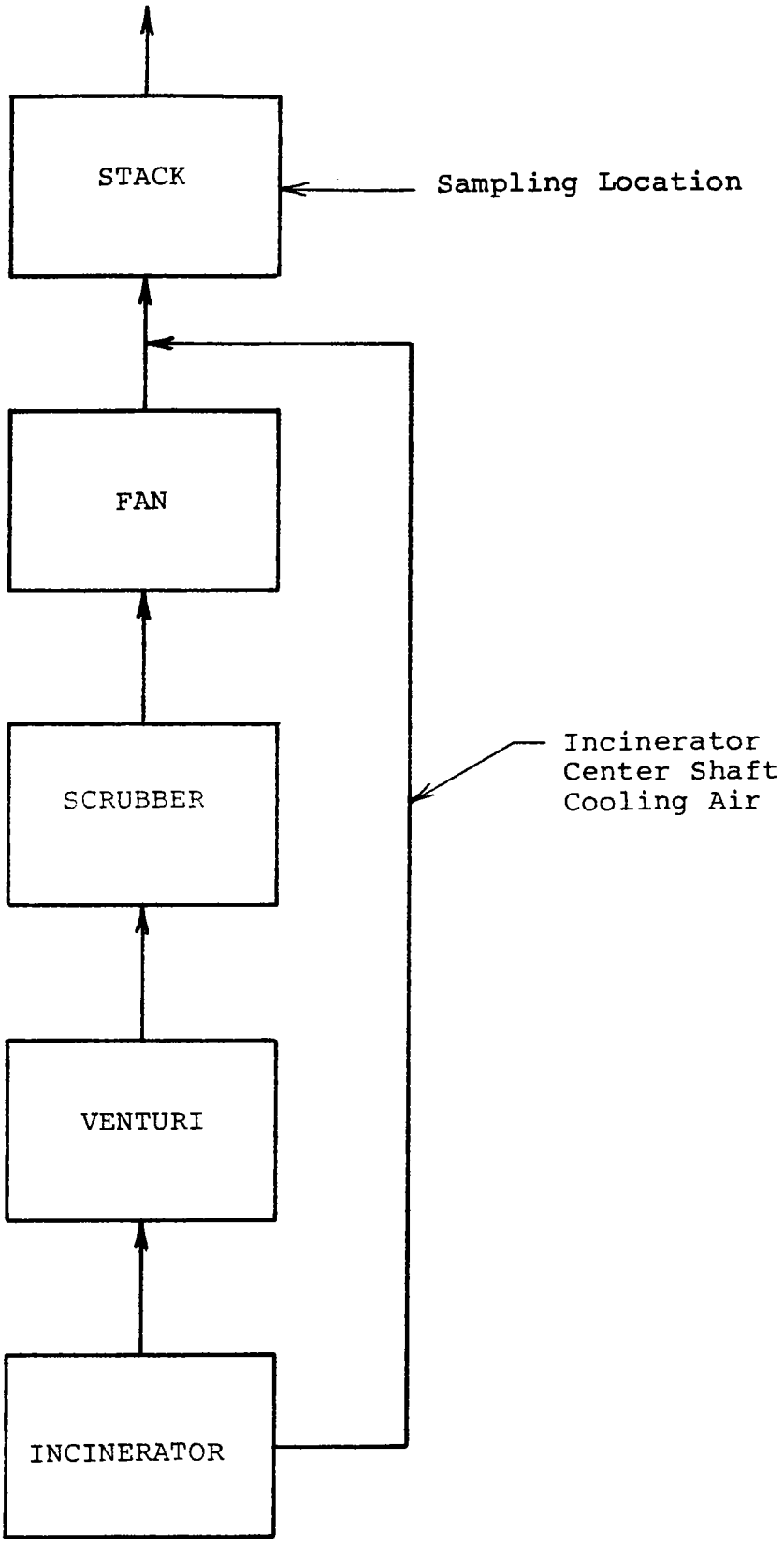


FIGURE 1. PROCESS AIR FLOW SCHEMATIC SHOWING SAMPLING LOCATION.

## SAMPLING AND ANALYTICAL PROCEDURES

All sampling and analytical procedures used were those generally recommended by the United States Environmental Protection Agency and the Wisconsin Department of Natural Resources. Complete details of the equipment and procedures used are described in Appendix E, which is extracted from the Federal Register, August 18, 1977.

The number of sampling points was based on the distance of the sampling ports from disturbances in the gas flow, as described in Method 1. The stack cross section was divided into 24 equal areas with 12 points on each of two traverse axes, as shown in Figures 2 and 3. Each point was sampled for three minutes, resulting in 72-minute tests.

Velocity measurements were made according to Method 2 procedures, while Method 3 was followed in determining the flue gas composition, molecular weight, and percent excess air. Method 5 was used for particulate emission determinations.

All sampling equipment used was manufactured by either Nutech Corporation or Entropy Environmentalists, Inc.

APPENDICES

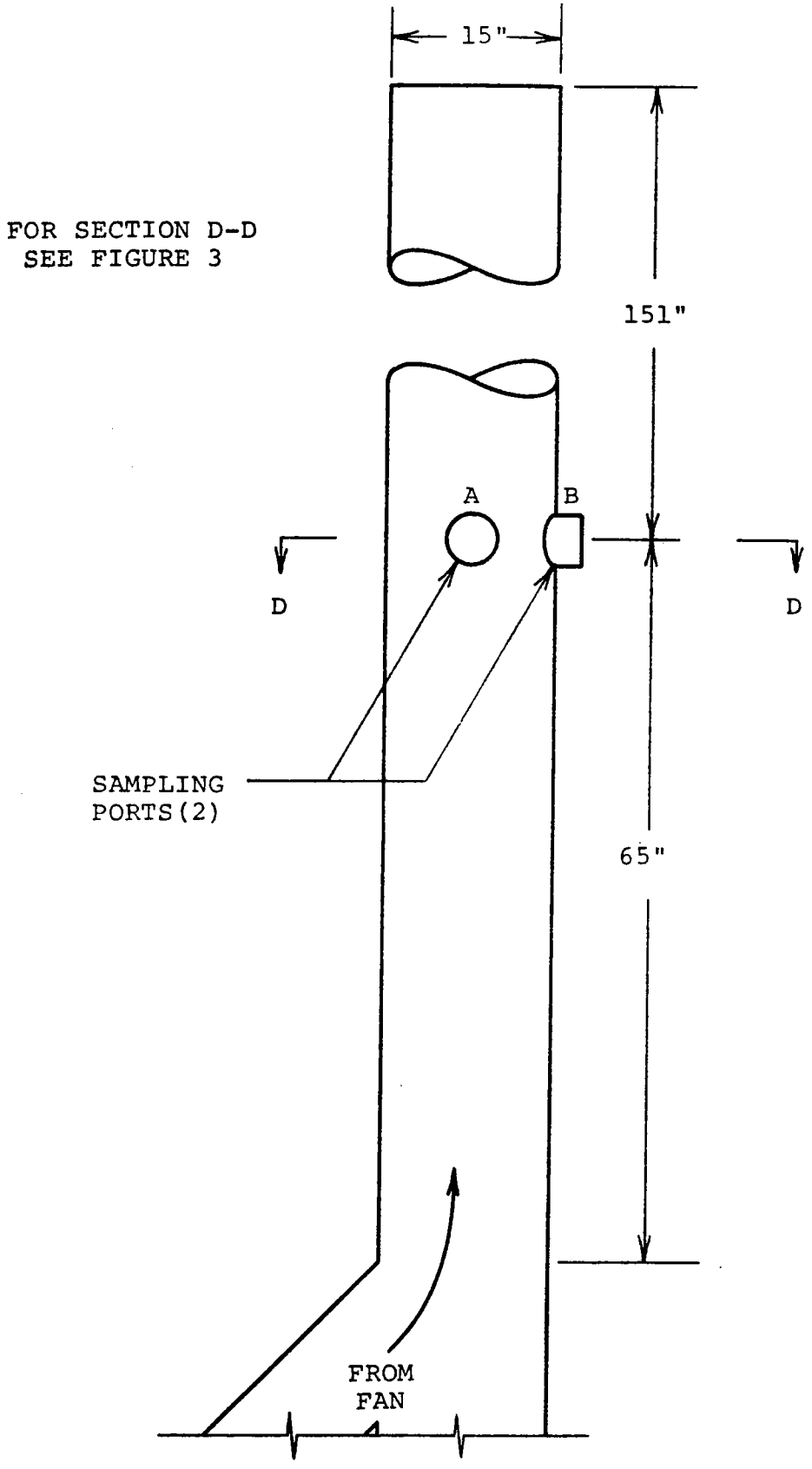


FIGURE 2. STACK DIMENSIONS AND SAMPLING PORT LOCATIONS

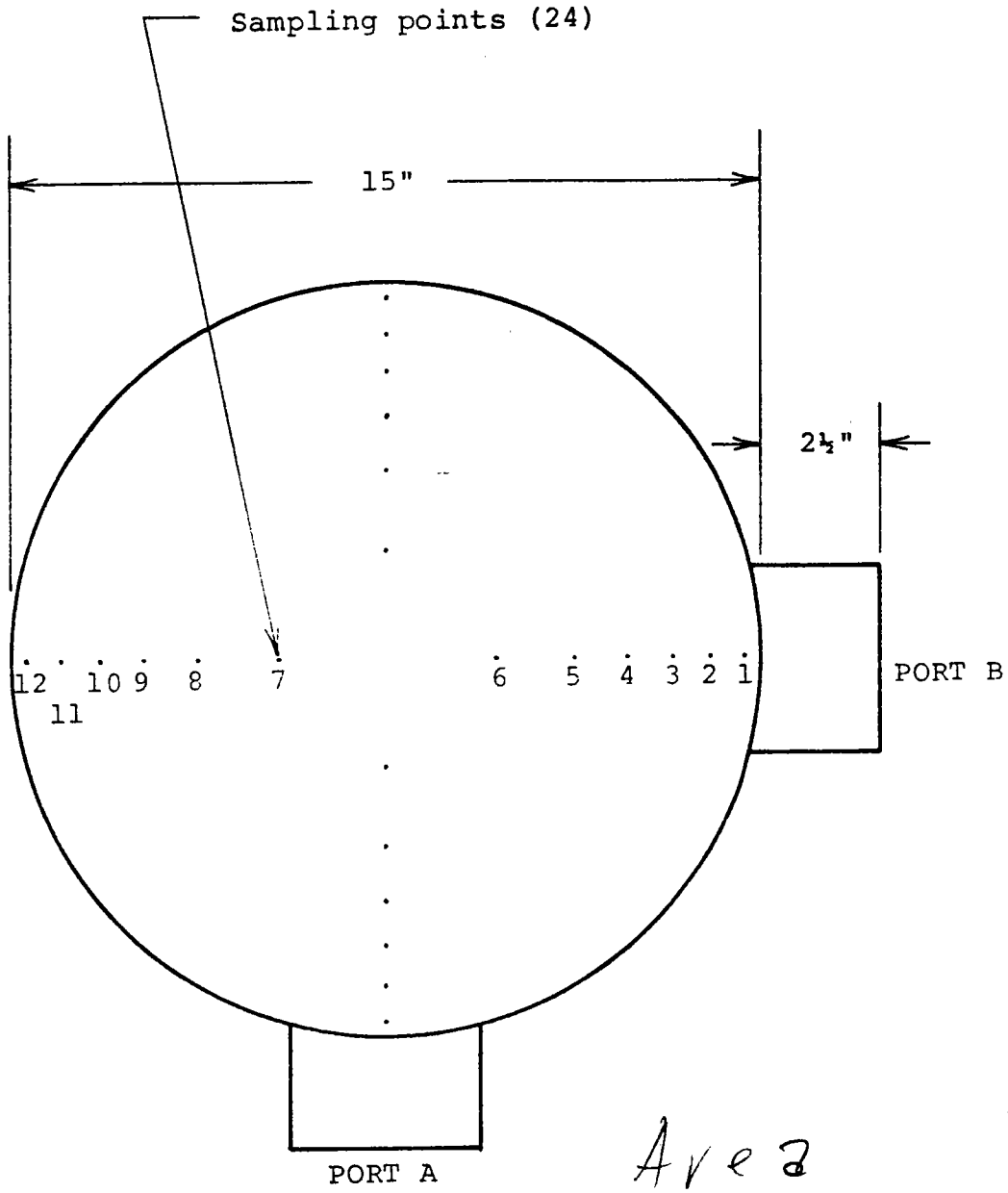


Area
1.227 ft²

FIGURE 3. STACK CROSS-SECTION SHOWING SAMPLING POINT LOCATIONS.

APPENDICES

APPENDIX A

(COMPUTER PRINTED)

# PARTICULATE TESTS RESULTS

# WITH EXAMPLE CALCULATIONS

# PARTICULATE FIELD DATA & RESULTS TABULATION

PLANT: Milwaukee South Shore Plant, Milwaukee, Wisconsin

TEST TEAM LEADER: Willis S. Nesbit

RUN 1 Grit Incinerator Outlet

RUN 2 Grit Incinerator Outlet

RUN 3 Grit Incinerator Outlet

| | | 1 | 2 | 3 |
|---|---|---|---|---|
| | RUN DATE | 11/ 5/80 | 11/ 5/80 | 11/ 5/80 |
| | RUN START TIME | 0850 | 1030 | 1219 |
| | RUN FINISH TIME | 1010 | 1145 | 1334 |
| | NET SAMPLING POINTS | 24. | 24. | 24. |
| TT | NET TIME OF RUN, MIN. | 72.00 | 72.00 | 72.00 |
| DN | SAMPLING NOZZLE DIA., IN. | .229 | .230 | .229 |
| CP | PITOT TUBE COEFFICIENT | .84 | .84 | .84 |
| Y | DRY GAS METER CAL. FACTOR | 1.018 | 1.018 | 1.018 |
| PB | BAROMETRIC PRESSURE, IN. HG. | 29.30 | 29.30 | 29.30 |
| PM | AVERAGE ORIFICE PRESSURE DROP, IN. H2O | 3.03 | 3.14 | 3.23 |
| VM | VOLUME OF DRY GAS SAMPLED CU. FT. @ METER COND. | 70.283 | 71.276 | 72.527 |
| TM | AVERAGE GAS METER TEMP. DEGREES F | 94. | 91. | 87. |
| VMSTD | VOLUME OF DRY GAS SAMPLED SCF * | 67.258 | 68.598 | 70.329 |
| VW | TOTAL H2O COLLECTED IN IMPINGERS & SIL. GEL, ML. | 29.0 | 43.5 | 36.5 |
| VWV | VOLUME OF WATER VAPOR, SCF * | 1.37 | 2.05 | 1.72 |
| PMV | PERCENT MOISTURE BY VOL. | 2.0 | 2.9 | 2.4 |
| MD | MOLE FRACTION DRY GAS | .980 | .971 | .976 |

(continued next page)

| | | 1 | 2 | 3 |
|---|---|---|---|---|
| PCO2 | PERCENT CO2 BY VOL., DRY | 1.8 | 2.0 | 2.0 |
| PO2 | PERCENT O2 BY VOL., DRY | 18.4 | 18.0 | 18.1 |
| PCO | PERCENT CO BY VOL., DRY | 0.0 | 0.0 | 0.0 |
| PN2 | PERCENT N2 BY VOL., DRY | 79.8 | 80.0 | 79.9 |
| MWD | MOLECULAR WT-DRY STACK GAS | 29.02 | 29.04 | 29.04 |
| MW | MOLECULAR WT-STACK GAS | 28.80 | 28.72 | 28.78 |
| PSI | STATIC PRES OF STACK GAS IN. H2O | -.4 | -.4 | -.5 |
| PS | STACK PRES, ABS., IN. HG. | 29.27 | 29.27 | 29.26 |
| TS | AVERAGE STACK TEMP. DEG F | 123. | 122. | 122. |
| DPS | AVERAGE VELOCITY HEAD OF STACK GAS, IN. H2O | 1.137 | 1.178 | 1.209 |
| VS | AVE STACK GAS VELOCITY, FPS | 63.7 | 64.9 | 65.6 |
| AS | STACK AREA, SQUARE INCHES | 177. | 177. | 177. |
| QS | STACK FLOW RATE, DRY SCFM* | 4076. | 4120. | 4191. |
| QA | ACTUAL STACK FLOW RATE, ACFM | 4696. | 4783. | 4841. |
| PERI | PERCENT ISOKINETIC | 98.4 | 98.4 | 100.0 |
| PEA | PERCENT EXCESS AIR | 690. | 577. | 605. |
| | METHOD 5 RESULTS: | | | |
| MGM | MILLIGRAMS CATCH | 38.8 | 115.6 | 191.9 |
| CAN | GRAINS PER DSCF* | .0089 | .0260 | .0421 |
| CAW | POUNDS PER HOUR | .31 | .92 | 1.51 |

* 68 DEG F, 29.92 IN. HG

# EXAMPLE PARTICULATE CALCULATIONS TEST NO. 3

## Grit Incinerator Outlet

VOLUME OF DRY GAS SAMPLED AT STANDARD CONDITIONS

VMSTD = 17.64 * VM * Y * (PB+PM/13.6) / (TM+460)

$$VMSTD = \frac{17.64 * 72.527 * 1.018 * (29.30 + 3.030/13.6)}{547.0} = 70.329 \text{ DSCF}$$

VOLUME OF WATER VAPOR AT STANDARD CONDITIONS

VWV = .04707 * VW

VWV = .04707 * 36.5 = 1.720 SCF

PERCENT MOISTURE IN STACK GAS

PMV = (100 * VWV)/(VMSTD+VWV)

$$PMV = \frac{100. * 1.72}{70.329 + 1.72} = 2.4 \text{ PERCENT}$$

MOLE FRACTION OF DRY STACK GAS

MD = (100.-PMV)/100.

$$MD = \frac{100.- 2.4}{100.} = .976$$

AVERAGE MOLECULAR WEIGHT OF DRY STACK GAS

MWD = (PCO2 * .44)+(PO2 * .32)+(PN2+PCO) * .28

MWD = ( 2.0*0.44)+(18.1*0.32)+((79.9+0.0)*0.28) = 29.04 LB/LB MOLE

MOLECULAR WEIGHT OF STACK GAS

MW = MWD * MD + 18 * (1-MD)

MW = 29.04 * .976 + 18 * (1- .976) = 28.78 LB/LB MOLE

STACK GAS VELOCITY AT STACK CONDITIONS

VS = 85.49 * CP * SQRT[(DPS * (TS+460))/(PS * MW)]

VS = 85.49*.84 * SQRT[(1.209 * 582.)/(29.26 * 28.78)] = 65.6 FPS

STACK GAS VOLUMETRIC FLOW AT STACK CONDITIONS

QA = VS * AS * 60 / 144

QA = 65.6* 177. * 60 / 144 = 4841. ACFM

STACK GAS VOLUMETRIC FLOW AT STANDARD CONDITIONS

QS = (17.64 * QA * PS * MD) / (TS+460)

$$QS = \frac{17.64 * 4841. * 29.26 * .976}{582.0} = 4191. \text{ SCFM}$$

PERCENT ISOKINETIC

PERI = ( 17.3 * (TS+460) * VMSTD)/(VS * TT * PS * MD * DN * DN)

$$PERI = \frac{17.3 * 582. * 70.329}{65.6 * 72.0 * 29.26 * .976 * .229 * .229} = 100.0 \text{ PERCENT}$$

GRAINS PER DRY STANDARD CUBIC FOOT

CAN = 0.01543 * MGM/VMSTD

CAN = 0.01543 * ( 191.9 / 70.329) = .0421 GR/DSCF

POUNDS PER HOUR

CAW = 60. * CAN * QS / 7000.

CAW = 60. * .0421 * 4191. / 7000. = 1.51 LBS/HR

Run 1 $Pmr_1 = \frac{60}{72} * \frac{.0388 * 1.229}{453.59 \cdot 000286} = 0.306$ > .308 ave

$PmRC = 60 * \frac{.0388}{453.59} * \frac{4076}{67.258} = 0.311$ 98.49% I

ENTROPY ENVIRONMENTALISTS, INC.

PERCENT EXCESS AIR

$$PEA = \frac{(PO2 - 0.5 * PCO)}{0.264 * PN2 - (PO2 - 0.5 * PCO)} * 100$$

$$PEA = \frac{18.1 - (0.5 * 0.0)}{(0.264 * 79.9) - (18.1 - 0.5 * 0.0)} * 100 = \quad 604.6 \text{ PERCENT}$$

APPENDIX B

# Preliminary Field Data

PLANT NAME Milwaukee South Shore

LOCATION Milwaukee, Wis.

SAMPLING LOCATION Int Incinerator

DUCT DEPTH
FROM INSIDE FAR WALL TO OUTSIDE OF PORT 17½"

NIPPLE LENGTH 2½"

DEPTH OF DUCT 15"

WIDTH (RECTANGULAR DUCT) _____

EQUIVALENT DIAMETER:

$D_E = \frac{2 \times \text{DEPTH} \times \text{WIDTH}}{\text{DEPTH} + \text{WIDTH}} = \frac{2(\quad)(\quad)}{(\quad + \quad)} =$ _____

| DISTANCE FROM PORTS TO NEAREST FLOW DISTURBANCE: | UPSTREAM | DOWNSTREAM |
|---|---|---|
| FEET | 65" | 75" |
| STACK DIAMETERS | 4.33 | 5 |

STACK AREA = $(7.5)^2 \pi$ = 177 $IN^2$

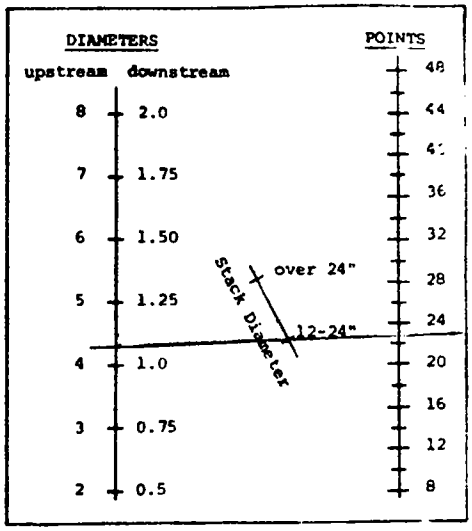


| Point | % OF DIAMETER | DISTANCE FROM INSIDE WALL | DISTANCE FROM OUTSIDE OF PORT |
|---|---|---|---|
| 1 | 2.1 | .32" | 2⅞" |
| 2 | 6.7 | 1.01" | 3½" |
| 3 | 11.8 | 1.77" | 4¼" |
| 4 | 17.7 | 2.66" | 5⅛" |
| 5 | 25.0 | 3.75" | 6¼" |
| 6 | 35.6 | 5.34" | 7⅞" |
| 7 | 64.4 | 9.66" | 12⅛" |
| 8 | 75.0 | 11.25" | 13¾" |
| 9 | 82.3 | 12.35" | 14⅞" |
| 10 | 88.2 | 13.23" | 15¾" |
| 11 | 93.3 | 14" | 16½" |
| 12 | 97.9 | 14.69" | 17⅛" |
| 13 | | | |
| 14 | | | |
| 15 | | | |
| 16 | | | |
| 17 | | | |
| 18 | | | |
| 19 | | | |
| 20 | | | |
| 21 | | | |
| 22 | | | |
| 23 | | | |
| 24 | | | |

## LOCATION OF TRAVERSE POINTS IN CIRCULAR STACKS

| | 4 | 6 | 8 | 10 | 12 | 14 | 16 | 18 | 20 | 22 | 24 |
|---|---|---|---|---|---|---|---|---|---|---|---|
| 1 | 6.7 | 4.4 | 3.2 | 2.6 | 2.1 | 1.8 | 1.6 | 1.4 | 1.3 | 1.1 | 1.1 |
| 2 | 25.0 | 14.6 | 10.5 | 8.2 | 6.7 | 5.7 | 4.9 | 4.4 | 3.9 | 3.5 | 3.2 |
| 3 | 75.0 | 29.6 | 19.4 | 14.6 | 11.8 | 9.9 | 8.5 | 7.5 | 6.7 | 6.0 | 5.5 |
| 4 | 93.3 | 70.4 | 32.3 | 22.6 | 17.7 | 14.6 | 12.5 | 10.9 | 9.7 | 8.7 | 7.9 |
| 5 | | 85.4 | 67.7 | 34.2 | 25.0 | 20.1 | 16.9 | 14.6 | 12.9 | 11.6 | 10.5 |
| 6 | | 95.6 | 80.6 | 65.8 | 35.6 | 26.9 | 22.0 | 18.8 | 16.5 | 14.6 | 13.2 |
| 7 | | | 89.5 | 77.4 | 64.4 | 36.6 | 28.3 | 23.6 | 20.4 | 18.0 | 16.1 |
| 8 | | | 96.8 | 85.4 | 75.0 | 63.4 | 37.5 | 29.6 | 25.0 | 21.8 | 19.4 |
| 9 | | | | 91.8 | 82.3 | 73.1 | 62.5 | 38.2 | 30.6 | 26.2 | 23.0 |
| 10 | | | | 97.4 | 88.2 | 79.9 | 71.7 | 61.8 | 38.8 | 31.5 | 27.2 |
| 11 | | | | | 93.3 | 85.4 | 78.0 | 70.4 | 61.2 | 39.3 | 32.3 |
| 12 | | | | | 97.9 | 90.1 | 83.1 | 76.4 | 69.4 | 60.7 | 39.8 |
| 13 | | | | | | 94.3 | 87.5 | 81.2 | 75.0 | 68.5 | 60.2 |
| 14 | | | | | | 98.2 | 91.5 | 85.4 | 79.6 | 73.8 | 67.7 |
| 15 | | | | | | | 95.1 | 89.1 | 83.5 | 78.2 | 72.8 |
| 16 | | | | | | | 98.4 | 92.5 | 87.1 | 82.0 | 77.0 |
| 17 | | | | | | | | 95.6 | 90.3 | 85.4 | 80.6 |
| 18 | | | | | | | | 98.6 | 93.3 | 88.4 | 83.9 |
| 19 | | | | | | | | | 96.1 | 91.3 | 86.8 |
| 20 | | | | | | | | | 98.7 | 94.0 | 89.5 |
| 21 | | | | | | | | | | 96.5 | 92.1 |
| 22 | | | | | | | | | | 98.9 | 94.5 |
| 23 | | | | | | | | | | | 96.8 |
| 24 | | | | | | | | | | | 98.9 |

## LOCATION OF TRAVERSE POINTS IN RECTANGULAR STACKS

| | 2 | 3 | 4 | 5 | 6 | 7 | 8 | 9 | 10 | 11 | 12 |
|---|---|---|---|---|---|---|---|---|---|---|---|
| 1 | 25.0 | 16.7 | 12.5 | 10.0 | 8.3 | 7.1 | 6.3 | 5.6 | 5.0 | 4.5 | 4.2 |
| 2 | 75.0 | 50.0 | 37.5 | 30.0 | 25.0 | 21.4 | 18.8 | 16.7 | 15.0 | 13.6 | 12.5 |
| 3 | | 83.3 | 62.5 | 50.0 | 41.7 | 35.7 | 31.3 | 27.8 | 25.0 | 22.7 | 20.8 |
| 4 | | | 87.5 | 70.0 | 58.3 | 50.0 | 43.8 | 38.9 | 35.0 | 31.8 | 29.2 |
| 5 | | | | 90.0 | 75.0 | 64.3 | 56.3 | 50.0 | 45.0 | 40.9 | 37.5 |
| 6 | | | | | 91.7 | 78.6 | 68.8 | 61.1 | 55.0 | 50.0 | 45.8 |
| 7 | | | | | | 92.9 | 81.3 | 72.2 | 65.0 | 59.1 | 54.2 |
| 8 | | | | | | | 93.8 | 83.3 | 75.0 | 68.2 | 62.5 |
| 9 | | | | | | | | 94.4 | 85.0 | 77.3 | 70.8 |
| 10 | | | | | | | | | 95.0 | 86.4 | 79.2 |
| 11 | | | | | | | | | | 95.5 | 87.5 |
| 12 | | | | | | | | | | | 95.8 |

ENTROPY ENVIRONMENTALISTS, INC.

Plant Name Milwaukee Land [illegible] Nichols

Sampling Location Grit Incinerator outlet Fuel Type nat. gas

Run and/or Sample No. 1 Leak Test? ✓ Date 11/5/80 Operator LSN

| Time of Sample Collection | Time of Analysis | $CO_2$ Reading A | $O_2$ Reading B | CO Reading C | $\%O_2$ B-A | %CO C-B | $\%N_2$ 100-C |
|---|---|---|---|---|---|---|---|
| 08:50 | 11:50 | 1.8 | 20.2 | 20.2 | 18.4 | 0 | — |
| — | 12:00 | 1.8 | 20.2 | 20.2 | 18.4 | 0 | — |
| 10:10 | 12:10 | 1.8 | 20.2 | 20.2 | 18.4 | 0 | — |
| | Avg. | 1.8 | | Avg. | 18.4 | 0 | 79.8 |

Run and/or Sample No. 2 Leak Test? ✓ Date 11/5/80 Operator LSN

| Time of Sample Collection | Time of Analysis | $CO_2$ Reading A | $O_2$ Reading B | CO Reading C | $\%O_2$ B-A | %CO C-B | $\%N_2$ 100-C |
|---|---|---|---|---|---|---|---|
| 10:30 | 13:45 | 2.0 | 20.0 | 20.0 | 18.0 | 0 | — |
| — | 13:55 | 2.0 | 20.0 | 20.0 | 18.0 | 0 | — |
| 11:45 | 14:05 | 2.0 | 20.0 | 20.0 | 18.0 | 0 | — |
| | Avg. | 2.0 | | Avg. | 18.0 | 0 | 80.0 |

Run and/or Sample No. 3 Leak Test? ✓ Date 11/5/80 Operator LSN

| Time of Sample Collection | Time of Analysis | $CO_2$ Reading A | $O_2$ Reading B | CO Reading C | $\%O_2$ B-A | %CO C-B | $\%N_2$ 100-C |
|---|---|---|---|---|---|---|---|
| 12:19 | 17:00 | 2.0 | 20.1 | 20.1 | 18.1 | 0 | — |
| — | 17:10 | 2.0 | 20.1 | 20.1 | 18.1 | 0 | — |
| 13:34 | 17:20 | 2.0 | 20.1 | 20.1 | 18.1 | 0 | — |
| | Avg. | 2.0 | | Avg. | 18.1 | 0 | 79.9 |

ENTROPY ENVIRONMENTALISTS, INC

SPECIALISTS IN SOURCE SAMPLING

# PARTICULATE FIELD DATA

Run # 1

Company Name Milwaukee South Shore - Nichols — Time Start 08:50
Address Milwaukee Wisconsin — Time Finish 10:10
Sampling Location Dist Incinerator outlet
Date 11/5/80 — Team Leader WSN — Technicians PLO
Barometric Pressure, in. Hg 29.30 — Static Pressure, in. $H_2O$ -0.45
Sampling Train Leak Test Vacuum, in. Hg 15 5
Sampling Train Leak Rate, cu. ft./min. 0.002 0.002

## EQUIPMENT CHECKS

- ✓ Pitots, pre-test
- ✓ Pitots, post-test
- ✓ Orsat Sampling System
- ✓ Tedlar Bag
- ✓ Thermocouple @ 32 °F

## IDENTIFICATION NUMBERS

| | | | |
|---|---|---|---|
| Reagent Box | 204 | Nozzle | 606 |
| Meter Box | N-7 | T/C Readout | 05 |
| Umbilical | N-1 | T/C Probe | 7-1 |
| Sample Box | 19 | Orsat Pump | 5 |
| Probe | 4.2 | Tedlar Bag | 4 |

Diameter .229

| Filter # | Tare |
|---|---|
| 5997 | .4518 |
| | |
| | |

## NOMOGRAPH SET-UP

Nomograph # WSN

| | | | |
|---|---|---|---|
| $\Delta H_@$ | 1.75 | C Factor | 1.60 |
| Meter Temp | 95 | Stack Temp | 125 |
| % Moisture | 5 | Ref. ΔP | 0.70 |

| Sample Point | Clock Time, Min. | Dry Gas Meter Reading, Cu. Ft. | Pitot Reading (Δp), In. $H_2O$ | Orifice Setting (ΔH), In. $H_2O$ Ideal | Orifice Setting (ΔH), In. $H_2O$ Actual | Gas Meter Temp. °F | Pump Vacuum In. Hg Gauge | Filter Box Temp. °F | Imp. Exit Temp. °F | Stack Temp. °F |
|---|---|---|---|---|---|---|---|---|---|---|
| A 1 | 0/0 | 795.643 | 1.00 | 2.65 | 2.65 | 86 | 4 | 225 | 70 | 121 |
| 2 | 3 | 798.46 | 1.25 | 3.35 | 3.35 | 96 | 5 | 235 | 70 | 122 |
| 3 | 6 | 801.58 | 1.30 | 3.45 | 3.45 | 97 | 5 | 230 | 70 | 122 |
| 4 | 9 | 804.70 | 1.30 | 3.45 | 3.45 | 96 | 5 | 230 | 70 | 123 |
| 5 | 12 | 808.09 | 1.35 | 3.60 | 3.60 | 94 | 5 | 235 | 70 | 124 |
| 6 | 15 | 810.99 | 1.35 | 3.60 | 3.60 | 96 | 5 | 235 | 70 | 124 |
| 7 | 18 | 814.29 | 1.10 | 2.85 | 2.85 | 90 | 3 | 240 | 70 | 123 |
| 8 | 21 | 816.98 | 1.10 | 2.85 | 2.85 | 90 | 3 | 240 | 70 | 123 |
| 9 | 24 | 819.88 | 1.05 | 2.75 | 2.75 | 93 | 3 | 248 | 70 | 123 |
| 10 | 27 | 822.70 | 1.15 | 3.05 | 3.05 | 94 | 4 | 250 | 70 | 123 |
| 11 | 30 | 825.75 | 1.10 | 2.85 | 2.85 | 95 | 3 | 250 | 70 | 123 |
| 12 | 33 | 828.37 | 1.00 | 2.65 | 2.65 | 96 | 3 | 250 | 70 | 122 |
| B 1 | 36/0 | 831.22 | 0.95 | 2.50 | 2.50 | 95 | 3 | 250 | 70 | 120 |
| 2 | 3 | 833.87 | 0.80 | 2.10 | 2.10 | 96 | 3 | 250 | 70 | 122 |
| 3 | 6 | 836.38 | 0.80 | 2.10 | 2.10 | 95 | 3 | 250 | 70 | 122 |
| 4 | 9 | 838.87 | 0.95 | 2.50 | 2.50 | 95 | 3 | 250 | 70 | 123 |
| 5 | 12 | 841.60 | 1.05 | 2.75 | 2.75 | 95 | 4 | 250 | 70 | 123 |
| 6 | 15 | 844.38 | 1.05 | 2.75 | 2.75 | 94 | 4 | 250 | 70 | 123 |
| 7 | 18 | 847.53 | 1.05 | 2.75 | 2.75 | 95 | 4 | 250 | 70 | 123 |
| 8 | 21 | 850.23 | 1.25 | 3.35 | 3.35 | 95 | 4 | 250 | 70 | 123 |
| 9 | 24 | 852.98 | 1.35 | 3.60 | 3.60 | 95 | 5 | 250 | 70 | 124 |
| 10 | 27 | 856.26 | 1.40 | 3.75 | 3.75 | 95 | 5 | 250 | 70 | 124 |
| 11 | 30 | 859.49 | 1.40 | 3.75 | 3.75 | 95 | 5 | 250 | 70 | 124 |
| 12 | 33 | 862.87 | 1.35 | 3.60 | 3.60 | 95 | 5 | 250 | 70 | 123 |
| | 72/OFF | 865.971 | | | | | | | | |

L.T. 831.170
831.215 ← O.K.

| $V_m$ | $(\sqrt{\Delta p})^2$ | $\overline{\Delta H}$ | $\overline{T_m}$ | $\overline{T_s}$ |
|---|---|---|---|---|
| 70.283 | 1.137 | 3.03 | 94 | 123 |

ENTROPY ENVIRONMENTALISTS, INC

# PARTICULATE FIELD DATA

Run # 2

Company Name Milwaukee South Shore - Nichols — Time Start 10:30
Address Milwaukee, Wisconsin — Time Finish 11:45
Sampling Location Unit Incinerator outlet
Date 11/5/80 — Team Leader WSN — Technicians PLO
Barometric Pressure, in. Hg 29.30 — Static Pressure, in. $H_2O$ -0.45
Sampling Train Leak Test Vacuum, in. Hg 15 10
Sampling Train Leak Rate, cu. ft./min. 0.002 0.002

## EQUIPMENT CHECKS

- ✓ Pitots, pre-test
- ✓ Pitots, post-test
- ✓ Orsat Sampling System
- ✓ Tedlar Bag
- ✓ Thermocouple @ 32 °F

## IDENTIFICATION NUMBERS

| | | | |
|---|---|---|---|
| Reagent Box | 204 | Nozzle 604 | Diameter .230 |
| Meter Box | N-7 | T/C Readout | 05 |
| Umbilical | N-1 | T/C Probe | S-1 |
| Sample Box | 3 | Orsat Pump | 5 |
| Probe | 4-1 | Tedlar Bag | 12 |

| Filter # | Tare |
|---|---|
| 7380 | .5088 |
| | |
| | |

## NOMOGRAPH SET-UP

Nomograph # WSN

| | | | |
|---|---|---|---|
| $\Delta H_@$ | 1.75 | C Factor | 1.00 |
| Meter Temp | 95 | Stack Temp | 125 |
| % Moisture | 5 | Ref. ΔP | 0.70 |

| Sample Point | Clock Time, Min. | Dry Gas Meter Reading, Cu. Ft. | Pitot Reading (Δp), In. $H_2O$ | Orifice Setting (ΔH), In. $H_2O$ Ideal | Orifice Setting (ΔH), In. $H_2O$ Actual | Gas Meter Temp. °F | Pump Vacuum In. Hg Gauge | Filter Box Temp. °F | Imp. Exit Temp. °F | Stack Temp. °F |
|---|---|---|---|---|---|---|---|---|---|---|
| A 1 | 0/0 | 866.193 | 1.05 | 2.75 | 2.75 | 87 | 6 | 225 | 70 | 112 |
| 2 | 3 | 869.16 | 1.15 | 3.05 | 3.05 | 87 | 6 | 225 | 70 | 115 |
| 3 | 6 | 871.93 | 1.25 | 3.35 | 3.35 | 89 | 7 | 225 | 68 | 122 |
| 4 | 9 | 875.09 | 1.35 | 3.60 | 3.60 | 90 | 7 | 225 | 68 | 123 |
| 5 | 12 | 878.17 | 1.50 | 3.95 | 3.95 | 90 | 8 | 225 | 68 | 124 |
| 6 | 15 | 881.46 | 1.50 | 3.95 | 3.95 | 91 | 8 | 230 | 68 | 126 |
| 7 | 18 | 884.78 | 1.35 | 3.60 | 3.60 | 92 | 8 | 235 | 68 | 126 |
| 8 | 21 | 887.94 | 1.15 | 3.05 | 3.05 | 93 | 7 | 235 | 68 | 124 |
| 9 | 24 | 890.98 | 1.10 | 2.85 | 2.85 | 93 | 6 | 240 | 68 | 125 |
| 10 | 27 | 893.84 | 1.10 | 2.85 | 2.85 | 93 | 6 | 250 | 68 | 124 |
| 11 | 30 | 896.64 | 1.20 | 3.15 | 3.15 | 93 | 6 | 250 | 68 | 124 |
| 12 | 33 | 899.63 | 1.20 | 3.15 | 3.15 | 93 | 7 | 250 | 68 | 124 |
| B 1 | 36/0 | 902.71 | 0.75 | 1.98 | 1.98 | 89 | 4 | 250 | 69 | 115 |
| 2 | 3 | 904.98 | 0.80 | 2.10 | 2.10 | 90 | 5 | 250 | 69 | 117 |
| 3 | 6 | 907.14 | 0.80 | 2.10 | 2.10 | 90 | 5 | 250 | 69 | 119 |
| 4 | 9 | 909.93 | 0.90 | 2.35 | 2.35 | 90 | 5 | 250 | 69 | 123 |
| 5 | 12 | 912.54 | 1.00 | 2.65 | 2.65 | 90 | 6 | 250 | 69 | 124 |
| 6 | 15 | 915.28 | 1.10 | 2.85 | 2.85 | 90 | 6 | 250 | 69 | 123 |
| 7 | 18 | 918.16 | 1.25 | 3.35 | 3.35 | 90 | 8 | 250 | 70 | 122 |
| 8 | 21 | 921.22 | 1.25 | 3.35 | 3.35 | 92 | 8 | 250 | 70 | 123 |
| 9 | 24 | 924.37 | 1.40 | 3.75 | 3.75 | 92 | 9 | 250 | 70 | 123 |
| 10 | 27 | 927.57 | 1.40 | 3.75 | 3.75 | 93 | 9 | 250 | 70 | 123 |
| 11 | 30 | 930.86 | 1.50 | 3.95 | 3.95 | 94 | 10 | 250 | 70 | 122 |
| 12 | 33 | 934.26 | 1.50 | 3.95 | 3.95 | 94 | 10 | 250 | 70 | 123 |
| | 36/OFF | 937.521 | | | | | | | | |

L.T. 902.106 713 902. O.K.

71.276 / $V_m$ — 1.178 / $(\sqrt{\Delta p})^2$ — 3.14 / $\overline{\Delta H}$ — 91 / $\overline{T_m}$ — 122 / $\overline{T_s}$

ENTROPY ENVIRONMENTALISTS, INC

PARTICULATE FIELD DATA

Run # 3

Company Name Milwaukee South Shore - Nichols — Time Start 12:19
Address Milwaukee, Wisconsin — Time Finish 13:34
Sampling Location Post Incinerator Outlet
Date 11/5/80 — Team Leader LSN — Technicians PLO
Barometric Pressure, in. Hg 29.30 — Static Pressure, in. $H_2O$ -0.52
Sampling Train Leak Test Vacuum, in. Hg 15 5
Sampling Train Leak Rate, cu. ft./min. 0.002 0.080

| EQUIPMENT CHECKS | | IDENTIFICATION NUMBERS | | | |
|---|---|---|---|---|---|
| ✓ Pitots, pre-test | | Reagent Box | 204 | Nozzle | 606 Diameter .229 |
| ___ Pitots, post-test | | Meter Box | N-7 | T/C Readout | 05 |
| ✓ Orsat Sampling System | | Umbilical | N-1 | T/C Probe | 7-1 |
| ✓ Tedlar Bag | | Sample Box | 19 | Orsat Pump | 5 |
| ✓ Thermocouple @ 32 °F | | Probe | 4-2 | Tedlar Bag | 15 |

| Filter # | Tare |
|---|---|
| 7143 | .5060 |
| | |
| | |

NOMOGRAPH SET-UP — Nomograph # LSN

| | | | |
|---|---|---|---|
| $\Delta H_@$ | 1.75 | C Factor | 1.00 |
| Meter Temp | 95 | Stack Temp | 1.25 |
| % Moisture | 5 | Ref. ΔP | 0.70 |

| Sample Point | Clock Time, Min. | Dry Gas Meter Reading, Cu. Ft. | Pitot Reading (Δp), In. $H_2O$ | Orifice Setting (ΔH), In. $H_2O$ Ideal | Orifice Setting (ΔH), In. $H_2O$ Actual | Gas Meter Temp. °F | Pump Vacuum In. Hg Gauge | Filter Box Temp. °F | Imp. Exit Temp. °F | Stack Temp. °F |
|---|---|---|---|---|---|---|---|---|---|---|
| A 1 | 0/0 | 937.757 | 1.25 | 3.35 | 3.35 | 82 | 5 | 250 | 70 | 120 |
| 2 | 3 | 940.88 | 1.35 | 3.60 | 3.60 | 82 | 4 | 258 | 70 | 121 |
| 3 | 6 | 944.13 | 1.40 | 3.75 | 3.75 | 84 | 4 | 262 | 70 | 123 |
| 4 | 9 | 947.32 | 1.50 | 3.95 | 3.95 | 86 | 5 | 266 | 70 | 124 |
| 5 | 12 | 950.66 | 1.50 | 3.95 | 3.95 | 86 | 5 | 268 | 70 | 122 |
| 6 | 15 | 953.98 | 1.25 | 3.35 | 3.35 | 87 | 5 | 270 | 70 | 122 |
| 7 | 18 | 956.98 | 1.15 | 3.05 | 3.05 | 88 | 4 | 265 | 70 | 122 |
| 8 | 21 | 960.07 | 1.10 | 2.85 | 2.85 | 88 | 3 | 255 | 70 | 123 |
| 9 | 24 | 963.13 | 1.10 | 2.85 | 2.85 | 88 | 3 | 250 | 70 | 123 |
| 10 | 27 | 965.83 | 1.20 | 3.15 | 3.15 | 88 | 4 | 250 | 70 | 122 |
| 11 | 30 | 968.89 | 1.15 | 3.05 | 3.05 | 89 | 4 | 250 | 70 | 122 |
| 12 | 33 | 971.86 | 1.20 | 3.15 | 3.15 | 89 | 4 | 250 | 70 | 123 |
| B 1 | 36/0 | 974.89 | 0.75 | 1.98 | 1.98 | 88 | 2 | 250 | 70 | 121 |
| 2 | 3 | 977.21 | 0.80 | 2.10 | 2.10 | 88 | 2 | 250 | 70 | 122 |
| 3 | 6 | 979.70 | 0.80 | 2.10 | 2.10 | 88 | 2 | 250 | 70 | 122 |
| 4 | 9 | 982.22 | 0.95 | 2.50 | 2.50 | 88 | 3 | 250 | 70 | 122 |
| 5 | 12 | 984.93 | 1.05 | 2.75 | 2.75 | 88 | 3 | 250 | 70 | 123 |
| 6 | 15 | 987.76 | 1.20 | 3.15 | 3.15 | 87 | 4 | 250 | 70 | 122 |
| 7 | 18 | 990.86 | 1.25 | 3.35 | 3.35 | 88 | 4 | 250 | 70 | 122 |
| 8 | 21 | 993.93 | 1.35 | 3.60 | 3.60 | 88 | 5 | 250 | 70 | 123 |
| 9 | 24 | 996.99 | 1.45 | 3.85 | 3.85 | 89 | 5 | 250 | 70 | 123 |
| 10 | 27 | 1000.41 | 1.50 | 3.95 | 3.95 | 90 | 5 | 250 | 70 | 123 |
| 11 | 30 | 1003.76 | 1.50 | 3.95 | 3.95 | 90 | 5 | 250 | 70 | 123 |
| 12 | 33 | 1006.99 | 1.55 | 4.15 | 4.15 | 90 | 5 | 250 | 70 | 122 |
| | 72/OFF | 1010.327 | | | | | | | | |

L.T. 974.846
974.889 ← B 1
O.K.

| $V_m$ | $(\sqrt{\Delta p})^2$ | $\overline{\Delta H}$ | $\overline{T_m}$ | $\overline{T_s}$ |
|---|---|---|---|---|
| 72.527 | 1.209 | 3.23 | 87 | 122 |

ENTROPY ENVIRONMENTALISTS, INC.

PARTICULATE SAMPLING CLEANUP SHEET

REAGENT BOX(ES)# 0201

Plant NICHOLS — Date Received 11/7/20

Sampling Location COAL INCINERATOR — Date Analyzed 11/21

| Run # | 1 | 2 | 3 |
|---|---|---|---|
| Run Date | 11/5 | 11/5 | 11/5 |
| **ANALYSIS OF MOISTURE CATCH** | | | |
| Final Water Volume, ml. | 203 | 219 | 216 |
| Tared Volume, ml. | 200 | 200 | 200 |
| CONDENSED WATER, ml. | 3 | 19 | 16 |
| Final Silica Gel Wt., g. | 226.0 | 224.5 | 220.5 |
| Tared Wt., g. | 200.0 | 200.0 | 200.0 |
| ABSORBED WATER, g. | 26.0 | 24.5 | 20.5 |
| TOTAL WATER COLLECTED, ml. | 29.0 | 43.5 | 36.5 |
| **ANALYSIS OF CATCH FROM NOZZLE TO FILTER, INCLUSIVE** | | | |
| Filter + Particulate, mg. | 491.5 | 625.5 | 698.8 |
| Filter Tare, mg. | 451.8 | 508.8 | 506.8 |
| Filter Catch, mg. | - | - | - |
| Separate Rinsings, mg. | - | - | - |
| FILTER CATCH + RINSINGS, mg. | 39.7 | 116.7 | 192.8 |
| Acetone Volume, ml. | 125 | 150 | 125 |
| Acetone Residue, mg. | 0.9 | 1.1 | 9 |
| TOTAL PARTICULATE CATCH, mg. | 36.8 | 115.6 | 191.9 |
| **ANALYSIS OF IMPINGER WATER** | | | |
| Extraction wt., mg. | | | |
| Boildown wt., mg. | | | |
| Impinger Rinse wt., mg. | | | |
| Acetone Volume, ml. | | | |
| Acetone Residue, mg. | | | |
| Water Volume, ml. | | | |
| Water Residue, mg. | | | |
| TOTAL IMPINGER CATCH, mg. | | | |
| TOTAL TRAIN CATCH | | | |

**BLANK CALCULATION**

| | Acetone | Water |
|---|---|---|
| Volume, ml. | 200 | |
| Residue, mg. | 1.4 | |
| Concen., mg/ml | .007 | |

**NOTES AND COMMENTS**

EPA-5

ENTROPY ENVIRONMENTALISTS, INC

CUSTODY SHEET FOR REAGENT BOX # 0201

Date of Makeup 10/31/80 Initials BD Locked? ✓

Individual Tare of Reagent: 200 mls. of $H_2O$

Individual Tare of Reagent: _____ mls. of _____

Individual Silica Gel Tare Weight 200 gms.

PLANT NAME Nicholls

SAMPLING LOCATION Smt Limerick

| Run Number | Date Used | Initials | Locked? | Date Cleanup | % S. Gel Spent | Initials | Locked? |
|---|---|---|---|---|---|---|---|
| 1 | 11/5 | WSN | ✓ | 11/5 | 100% | WSN | ✓ |
| 2 | 11/5 | WSN | ✓ | 11/5 | 95% | WSN | ✓ |
| 3 | 11/5 | WSN | ✓ | 11/5 | 95% | WSN | ✓ |
| | | | | | | | |
| | | | | | | | |
| | | | | | | | |

Received in Lab Date 11/7 Initials MEQ Locked? ✓

Zero & Span Balance Initials MEQ

Sampling Method: EPA-5

| Filter # | Tare Weight (mgms) | Used on Test |
|---|---|---|
| 5997 | 451.8 | 1 |
| 7380 | 508.8 | 2 |
| 7143 | 506.0 | 3 |
| | | |
| | | |
| | | |

Remarks:

ENTROPY ENVIRONMENTALISTS, INC.

# APPENDIX C

Milwaukee, Wisc. 11/5/80

Nichols Eng. + Research

Weigh Belt Readings.

| | | | | |
|---|---|---|---|---|
| | | | | 1.33 hr |
| Test #1 | START | 310325 | 8:50 AM | |
| | STOP | 311760 | 10:10 AM | |
| | | 1435# | | 1076.25/hr |
| | | | | 1.25 hr |
| TEST #2 | START | 312035 | 10:30 AM | |
| | STOP | 313750 | 11:45 AM | |
| | | 1715# | | 1372 lb/hr |
| | | | | 1.42 hrs |
| TEST #3 | START | 314200 | 12:10 PM | |
| | STOP | 315815 | 1:35 PM | |
| | | 1615# | | 1140 lb/hr |

Feed rates

Milwaukee, Wisc. 11/5/80

Sample procedure used during Test: Bill Kelly

Furnace Feed - 4 grab samples during each Test - Composite.

Ash - 1 sample taken from Ash bin midway through 2nd Test.

Feed for Mercury -

1 sample - 11/3/80

1 sample - 11/4/80

6 samples - 1 hour apart during Testing.

Composite of these 8

Samples To Lab:

3 Feed samples

1 Ash sample

2 [illegible] for Mercury

HARISEY ENGINEERING COMPANY

ST. PAUL, MINNESOTA 55113
PHONE (612) 633-5150
CABLE ADDRESS: RAMCO
TELEX 29-7001

Service Number [illegible]

Original Job Number [illegible]

**INVOICED TO**

Grundean Co
8500 S. 5th Ave.
Oak Creek, Wisco 53201

Contact Paul Schmidt
Phone 414-769-5800
Customer P.O. # 856-94-1656

**JOB LOCATION**

Milwaukee South Shore Plant
Pietz Rd & 5th Ave

Contact Bill Kelly
Phone [illegible]

**CONVEYOR DATA**

Conveyor No. 1 Incline 0°
Product Rate 1.75 TPH
Belt: Width [illegible] Thick [illegible]
Idler: Angle Flat Space 3.667 FT
Take Up Screw Drive direct
Speed Pick Up Roll Dia. [illegible]

**CALIBRATION DATA**

Belt: Length 19 ft Speed 551 SEC
Test: Rev 3 Length 57 ft Time 1.53 sec
Test: Speed Pulses 32958

**TOTALIZER FINAL SETTINGS**

Test Duration [illegible] Count Rate 7500 CPH
Zero/Tare 477 Span 800
Current Output 4-20 MA Pulse Output

**EQUIPMENT SERVICED**

10-20 / 40-20-[illegible]

**REASON FOR SERVICE**

✓ Installation ___ Repair
✓ Calibration ___ Other

Service Man [illegible]

**DATE OF SERVICE**
(including travel)

10-27-80 To 10-29-80
To

**EQUIPMENT DATA**

Scale Model No. 10-20
Load Cell [illegible]
Totalizer: Model [illegible] S/N [illegible]
Speed Pick Up Model [illegible] S/N
Recorder
Remote: Meter CTR

**WEIGHT CALIBRATION**

30 ft Static Wt Chain Material
Equiv Belt Load 11.7498 Lbs/Ft
Equiv Tons .6877 Tons
Equiv Rate 55% 1.25 Tons/Hr

**ELECTRONIC CALIBRATION**

Resistor Value Ohms
Equiv Belt Load Lbs/Ft
Equiv Tons Tons
Equiv Rate %

Comments: Found that material build-up caused the load cell clevis to scrape the belt. Cut 2 hole on each side of conver to clean out material from under meth the belt

[illegible] (Nuhlsen) 10-29-80 [illegible]

Customer Signature/Title Date Service Man

REC-E-5B

CUSTOMER

Service Number [illegible]

Original Job Number 12[illegible]

**INVOICED TO**

[illegible] Co.
8500 S. 5th Ave.
Oak Creek, WI 53201

Contact Paul Schindt
Phone [illegible]-709-5400
Customer P.O. # [illegible]-94-[illegible]

**EQUIPMENT SERVICED**

10-20 / 40-20

**REASON FOR SERVICE**

✓ Installation ___ Repair
✓ Calibration ___ Other

Service Man [illegible]

**JOB LOCATION**

[illegible] South Shore Plant
[illegible] Rd & 5th Ave.

Contact Bill Kelly x 522
Phone [illegible]

**DATE OF SERVICE**
(including travel)

10-27-80 To 10-29-80
To

Comments: [illegible] - contacted Bill Kelly [illegible] [illegible] job site 4:00 pm [illegible] [illegible] calibration couldn't get [illegible] [illegible] [illegible] [illegible] [illegible] [illegible] [illegible] [illegible] [illegible] caused [illegible] cell clevis to ride on belt. Left job site 5:30 pm. Arrived job site 7:30 pm 10-29- waited for welder to cut 2 hole on conveyor [illegible] could clean up material from under the belt. Started calibration set zero dial at 437. Did static weight test with 30 lbs. Continued static weight calibration. couldn't use rate meter because it did. It took [illegible] 55% of 5 volts or 2.79 volts on amplifier [illegible] [illegible] dial to 800 [illegible] test [illegible] & counter [illegible] to be correct. Left job site at 3:30 pm 10-29-80

[illegible] (Wilde Eng) 10-29-80 [illegible]

Customer Signature/Title Date Service Man

REC-E-17

CUSTOMER

APPENDIX D

# TEST PARTICIPANTS

| | |
|---|---|
| WILLIS S. NESBIT | PROJECT DIRECTOR |
| PATRICK L. OWEN | ENGINEERING TECHNICIAN |

APPENDIX E

# APPENDIX F

# CALIBRATIONS

## GENERAL

All measuring equipment Entropy uses is initially calibrated before use. Equipment which can change calibration is both checked upon return from each field use and is also periodically recalibrated in full. When an instrument is found out of calibration, it is so noted in the report and appropriate adjustments are made to the final results. The equipment is then repaired and recalibrated or retired as needed. Specific equipment is handled as follows:

## PITOT TUBE

All pitot tubes used by Entropy, whether separate or attached to a sampling probe, are constructed in-house or by Nutech Corporation. Prior to their initial usage, they are calibrated using EPA geometry standards. In general, if a type "S" pitot tube is assembled correctly, and positioned properly in relation to the probe nozzle, it will have an average Cp of 0.84. As long as it is not damaged, it should not change its calibration. The recalibration schedule for pitot tubes is related to the physical condition and usage of the pitot tube, not a fixed time schedule. Each pitot tube is inspected upon return to the laboratory from each field use.

## DRY GAS METER AND ORIFICE METER

All Entropy meter boxes are calibrated upon purchase and at least once every six months against a secondary test meter (one calibrated against a wet test meter) according to their usage history. Basic procedures are outlined in the EPA Publication No. APTD-0576. The only differences are in the choice of flow rates used and the volumes metered at each flow rate. After each field use, quick checks are performed to insure AH@ changes of less than 5%. These checks compare the orifice against the dry gas meter. If greater than 5% changes occur, recalibration and repair are instituted.

## NOZZLES

Each nozzle is calibrated upon purchase, and thereafter whenever it becomes apparent that the nozzle has become damaged. Each nozzle is inspected upon return to laboratory from each field use. The diameter is measured on four different axes, with the high and low readings differing by no more than 0.004 inches as a tolerance.

## TEMPERATURE MEASURING INSTRUMENTS

After each field use, the thermocouples or thermometers are calibrated against an ASTM precision mercury-in-glass thermometer across a wide range of temperatures. If the initial

reading is not within ± 1.5% of the absolute temperature reading of the standard thermometer, the instrument is adjusted until it is in the acceptable range.

MAGNEHELIC GAUGES

After each field use, each magnehelic gauge is calibrated against an inclined manometer at three different settings (low, medium, high) over the range of the individual gauges. If the readings differ more than ± 5% from the manometer readings, the magnehelics are recalibrated.

BAROMETER

After each field use, each barometer is checked against a mercury barometer.

DATE: 11-21-79

DRY GAS METER IDENTIFICATION: # 1017057

BAROMETRIC PRESSURE ($P_b$): 29.74 in. Hg

| APPROXIMATE FLOW RATE ($\bar{Q}$) $\Delta H$ / cfm | SPIROMETER ~~(WET METER)~~ GAS VOLUME ($V_s$) $ft^3$ | DRY GAS METER VOLUME ($V_{dg}$) $ft^3$ | TEMPERATURES: SPIROMETER ~~(WET METER)~~ ($t_s$) °F/°R | TEMPERATURES: DRY GAS METER ($t_d$) °F/°R | DRY GAS METER PRESSURE ($\Delta p$) in. $H_2O$ / in. Hg | TIME ($\Theta$) min. | FLOW RATE ($Q$) cfm | METER METER COEFFICIENT ($Y_{ds}$) | AVERAGE METER COEFFICIENT ($\bar{Y}_{ds}$) |
|---|---|---|---|---|---|---|---|---|---|
| 0.51 / 0.4 | 1.000 | 1.005 | 530.5 | 532.5 | -0.8 | 2.52 | 0.39 | 1.0008 | |
| / 0.4 | 1.000 | 1.007 | 530.5 | 532.5 | -0.8 | 2.52 | .39 | 0.9988 | 1.0005 |
| / 0.4 | 1.000 | 1.004 | 530.5 | 532.5 | -0.8 | 2.52 | .39 | 1.0018 | |
| 1.25 / 0.6 | 1.000 | 1.002 | 530.5 | 532 | -1.3 | 1.62 | .61 | 1.0041 | |
| / 0.6 | 1.000 | 1.008 | 530.5 | 532 | -1.3 | 1.63 | .61 | .9981 | 0.9991 |
| / 0.6 | 1.000 | 1.011 | 530.5 | 532 | -1.3 | 1.65 | .60 | .9951 | |
| ~.18 / 0.8 | 1.000 | 1.018 | 530.5 | 532.5 | -1.8 | 1.27 | .78 | .9904 | |
| 0.8 | 1.000 | 1.013 | 530.5 | 532.5 | -1.8 | 1.27 | .78 | .9953 | 0.9947 |
| 0.8 | 1.000 | 1.010 | 530.5 | 532.5 | -1.8 | 1.27 | .78 | .9983 | |
| 3.3 / 1.0 | 1.000 | 1.020 | 530 | 532.5 | -2.3 | 1.02 | .97 | .9907 | |
| / 1.0 | 1.000 | 1.021 | 530 | 532.5 | -2.3 | 1.03 | .96 | .9897 | 0.9920 |
| / 1.0 | 1.000 | 1.015 | 530 | 532.5 | -2.3 | 1.03 | .96 | .9955 | |
| 4.8 / 1.2 | 1.000 | 1.023 | 530 | 532.5 | -3.1 | 0.88 | 1.12 | .9897 | |
| / 1.2 | 1.000 | 1.021 | 530 | 532.5 | -3.1 | 0.87 | 1.14 | .9917 | 0.9910 |
| / 1.2 | 1.000 | 1.021 | 530 | 532.5 | -3.1 | 0.87 | 1.14 | .9917 | |
| | | | | | | | Average: | .99544 | .99546 |

$$Q = 17.65 \cdot \frac{V_s}{\Theta} \cdot \frac{P_b}{(t_s + 460)}$$

$$Y_{ds} = \frac{V_s}{V_{dg}} \cdot \frac{(\bar{t}_d + 460)}{(t_s + 460)} \cdot \frac{P_b}{(P_b + \frac{\Delta p}{13.6})}$$

ENTROPY ENVIRONMENTALISTS, INC.

METER BOX CALIBRATION

METER BOX NUTECH 7

DATE 8/8/80 $P_B$ 29.63 INITIALS JTN

Date*_____ $P_B$*_____ Initials*_____

| ΔH ORIFICE SETTING | $V_T$ TEST METER VOLUME cf | $T_T$ TEST METER TEMP. °F | θ TIME, MINUTES M:SEC / M.dec | $T_M$ METER BOX TEMP °F | $V_M$ METER BOX VOLUME cf | Y | ΔH@ |
|---|---|---|---|---|---|---|---|
| 6.0 | 5 | 73° | 3.37 / 3.62 | ~~4.8~~ 79° | 4.875 | 1.0220 | 1.7735 |
| 4.0 | 5 | 73° | 4.25 / 4.42 | 86° | 4.945 | 1.0256 | 1.7400 |
| 2.0 | 5 | 73° | 6.12 / 6.20 | 90° | 5.024 | 1.0219 | 1.6994 |
| 1.5 | 5 | 73° | 7.24 / 7.40 | 96° | 5.095 | 1.0199 | 1.7961 |
| 1.0 | 3 | 73° | 5.23 / 5.38 | 102° | 3.106 | 1.0159 | 1.7393 |
| 0.7 | 3 | 73° | 6.27 / 6.45 | 98° | 3.100 | 1.0114 | 1.7625 |
| 0.5 | 3 | 73° | 7.34 / 7.57 | 96° | 3.065 | 1.0198 | 1.7403 |
| 0.3 | 2 | 73° | 6.29 / 6.48 | 92° | 2.045 | 1.0121 | 1.7340 |
| | | | | | AVERAGE | 1.018 | 1.748 |

* Indicates date of calibration

$$\Delta H@ = \frac{[(T_T + 460)\,\theta\,]^2\,(0.0317)\,(\Delta H)}{(V_T)^2\,(P_B)\,(T_M + 460)}$$

$$Y = \frac{(T_M + 460)\,(P_B)\,(V_T)}{(\Delta H/13.6 + P_B)(T_T + 460)(V_M)}$$

note: calculate $[(T_R + 460)\,\theta\,]^2$ first

ENTROPY ENVIRONMENTALISTS, INC.

# NOZZLE CALIBRATION DATA

NOZZLE # 606

| DATE | INITIALS | DIAMETER, in. 1 | 2 | 3 | 4 | AVERAGE |
|---|---|---|---|---|---|---|
| 8/13/80 | JTN | .236 | .237 | .236 | .235 | .236 |
| 9/16/80 | JWA | .228 | .228 | .232 | .231 | ~~.229~~ |

ENTROPY ENVIRONMENTALISTS, INC

NOZZLE CALIBRATION DATA

NOZZLE # 604

| DATE | INITIALS | DIAMETER, in. 1 | 2 | 3 | 4 | AVERAGE |
|---|---|---|---|---|---|---|
| 8/13/80 | JTN | .240 | .239 | .239 | .240 | .239 |
| 9/16/80 | TWA | 228 | .230 | 231 | 232 | .230 |

ENTROPY ENVIRONMENTALISTS, INC