Note: This material is related to a section in *AP42, Compilation of Air Pollutant Emission Factors, Volume I Stationary Point and Area Sources.* AP42 is located on the EPA web site at www.epa.gov/ttn/chief/ap42/

The file name refers to the file number, the AP42 chapter and then the section. The file name "rel01_c01s02.pdf" would mean the file relates to AP42 chapter 1 section 2. The document may be out of date and related to a previous version of the section. The document has been saved for archival and historical purposes. The primary source should always be checked. If current related information is available, it will be posted on the AP42 webpage with the current version of the section.

logged 5/28/86 (#14) 22b&c

SUMMARY OF SOURCE EMISSIONS DATA

Facility	-	MSD - Little Miami Treatment Plant
Location	-	Cincinnati, Ohio
Source	-	Sewage Sludge Incinerator #1
Test Date	-	9/16/80
Test Purpose	-	Compliance Test for Particulate, Mercury
Test Method	-	U.S. EPA Ref. Methods 1-5 - Particulate U.S. EPA Ref. Method 105 - Mercury
Emission Rate	-	Particulate - .022 gr/dscf Particulate - 3.3 pound/hour Particulate - 0.92 pound/ton dry sludge Mercury - 579.7 grams/day
Production Rate	-	7216.7 pounds dry sludge/hour
Type of Control	-	Venturi scrubber and mist eliminator
Sampling Location	-	exit stack of control equipment
Comments	-	

SUMMARY OF SOURCE EMISSIONS DATA

Facility	-	MSD-Little Miami Treatment Plant
Location	-	Cincinnati, Ohio
Source	-	Sewage Sludge Incinerator #2
Test Date	-	9-30-80
Test Purpose	-	Compliance test for particulate, Mercury
Test Method	-	US EPA Ref. Methods 1-5 - Particulate US EPA Ref. Method 105 - Mercury
Emission Rate	-	.039 gr/dscf, 6.57 pounds/hour, 1.73 pounds/dry ton sludge Hg - 579.7 grams/day
Production Rate	-	7573.3 pounds dry sludge/hour
Type of Control	-	Venturi scrubber and mist eliminator
Sampling Location	-	Exit stack of control equipment
Comments	-	

TABLE 2-1. PARTICULATE EMISSIONS DATA

INCINERATOR NO. 1

Run no.	Date (1980)	Concentration, gr/dscf[a]			Emission rate[b]			
		Filterable	Condensible		Filterable		Condensible, lb/h	
			Organic	Inorganic	lb/h	lb/T	Organic	Inorganic
LM1-1	9/16	0.028	<0.001	0.020	4.3	1.19	<0.1	3.0
LM1-2	9/16	0.019	<0.001	0.022	2.8	0.77	<0.1	3.2
LM1-3	9/16	0.018	<0.001	0.017	2.8	0.79	<0.1	2.6

INCINERATOR NO. 2

Run no.	Date (1980)	Concentration, gr/dscf			Emission rate			
		Filterable	Condensible		Filterable		Condensible, lb/h	
			Organic	Inorganic	lb/h	lb/T	Organic	Inorganic
LM2-1	9/30	0.049	<0.001	0.006	8.8	2.24	<0.1	1.1
LM2-2[c]	9/30	0.040	0.001	0.021	6.2	1.68	0.2	3.2
LM2-3	9/30	0.028	ND[d]	0.034	4.7	1.26	ND	5.8

[a] Grains per dry standard cubic foot at 68°F and 29.92 in. Hg. Filterable material includes that captured by the front half of the sampling train (probe and filter) and condensible material includes that retained by the back half (impingers).

[b] Emission rate in pounds per hour (lb/h) and pounds per ton of dry sludge solids (lb/T).

[c] Results adjusted for leak rate, not included in average.

[d] None detected.

TABLE 2-2. SUMMARY OF FLUE GAS CONDITIONS

INCINERATOR No. 1

Run No.	Date (1980)	Flue gas flow rate, dscfh[a]	Temperature, °F	Moisture, %	Oxygen,[b] %	Carbon[b] dioxide, %
LM1-1	9/16	1,065,000	121	4.8	12.7	6.3
LM1-2	9/16	1,022,000	123	7.5	12.4	6.6
LM1-3	9/16	1,073,000	123	6.0	12.6	6.4

INCINERATOR NO. 2

Run No.	Date (1980)	Flue gas flow rate, dscfh	Temperature, °F	Moisture, %	Oxygen, %	Carbon dioxide, %
LM2-1	9/30	1,262,000	118	3.1	13.8	5.8
LM2-2	9/30	1,085,000	127	5.7	11.6	6.4
LM2-3	9/30	1,193,000	122	6.3	12.2	5.8

[a] Flue gas flow rate in dry, standard cubic feet per hour at 68°F and 29.92 in. Hg.

[b] Orsat analysis on integrated bag samples, % by volume dry basis.

TABLE 2-3. MERCURY EMISSIONS DATA

Composite Sample No.	Date	Time	Hg[a] concentration, μg/g	Hg[b] emission rate, g/day	Bulk sludge moisture content, %	Incinerator[c] feed rate, %
1	9/22	0930-1630	7.0	572	54.44	100
2	9/22	1730-0030	7.4	604	55.51	100
3	9/23	0130-0930	6.9	563	53.68	80

[a] The reported mercury (Hg) concentrations are the average of triplicate analyses. Results are in micrograms of Hg per gram of dry sludge solids.

[b] The mercury emission rate in grams of Hg per day is based on one incinerator operating continuously for 24 hours at the design feed rate of 7500 lb dry sludge solids per hour.

[c] Approximate load during sample collection.

TABLE 2-4. PROCESS DATA

Unit	Test[a]	Date and time	Bulk[b] sludge feed rate, lb/hr	Sludge[c] dry solids content, %	Sludge ash content, % dry basis	Dry solids feed rate, lbs/hr	Particulate emissions, lb/ton dry sludge solids	No. 1 Hearth exit gas temperature, °F	Water flow rate to venturi sprays, GPM	Venturi pressure drop, in. H_2O	Average[d] auxiliary fuel oil flow, GPH
1	1	9/16 1418-1604	16,400	44.1	44.3	7230	1.19	1300	110	24	9.2
	2	9/16 1700-2030	16,600	44.0		7300	0.77	1325	120	22	
	3	9/16 2117-2300	16,400	43.4		7120	0.79	1300	120	24	
2	1	9/30 1129-1431	17,300	45.5	56.1	7870	2.24	1525	110	23	-
	2	9/30 1656-1841	16,200	45.6		7400	1.68	1475	112	24	
	3	9/30 2037-2232	16,900	44.1		7450	1.26	1500	110	23	

[a] All tests were performed during manufacturer's 100% load test.
[b] The average sludge feed rate for the test interval was calculated from the tape printout of 6-minute integrated feed rates.
[c] Sludge solids are from composites taken during the test interval (a composite consisted of two or three grab samples).
[d] The fuel oil consumption rates are as reported by the manufacturer. All other process data was summarized from logs supplied by plant personnel.

STAPPA/ALAPCO
2.5

logged 5/28/86
(#14)

22

SOUTHWESTERN OHIO

AIR POLLUTION CONTROL AGENCY

BUTLER - CLERMONT - HAMILTON - WARREN COUNTIES

2400 Beekman Street
Cincinnati, Ohio 45214
(513) 251-8777

May 22, 1986

Mr. E. L. Martinez, Chief
Source Analysis Section/AMTB (MD-14)
U.S. Environmental Protection Agency
Research Triangle Park, North Carolina 27711

RE: Source Emissions Data

Dear Mr. Martinez:

Enclosed is some information on source tests which have been conducted in our area. There is information on two source categories, sewage sludge incinerators (particulate matter) and paint and varnish manufacture (VOC). Hopefully this information will be of use in the project of updating emission factors.

The enclosed information is a summary of the actual test reports, and includes the information specifically mentioned in the criteria guidance you provided. The complete test reports are on file at our office.

If you need any further information, please contact David Faris of our Agency at (513) 251-8863, or myself at (513) 251-8777.

Sincerely,

Thomas N. Tucker

Thomas N. Tucker,
Area Supervisor

TNT/jr
Enclosures

STAPPA/ALAPCO
2.5

logged 5/28/86
(#14) 22a

SUMMARY OF SOURCE EMISSIONS DATA

Facility	-	Metropolitan Sewer District (MSD) - Little Miami Treatment Plant
Location	-	Cincinnati, Ohio
Source	-	Sewage Sludge Incinerator #2
Test Date	-	July 9, 1985
Test Purpose	-	Compliance test for particulate matter
Test Method	-	U.S. EPA Reference Methods 1-5
Emission Rate	-	.0378 gr/dscf 7.84 pound/hour 1.85 pound/ton dry sludge
Production Rate	-	8460 pound/hour dry sludge
Type of Control	-	Venturi scrubber (20 in H_2O pressure drop) and mist eliminator.
Sampling Location	-	Sampling was performed at the exit stack of the control equipment.
Comments	-	

SECTION 2

SUMMARY OF RESULTS

Table 2-1 presents the particulate emission data collected during the sampling period. Particulate concentrations are reported in grains per dry standard cubic foot, and emission rates, in pounds per hour and pounds per ton of dry sludge feed. Example calculations are presented in Appendix A.

TABLE 2-1. FILTERABLE PARTICULATE EMISSIONS DATA

Run No.	Sampling date (1985)	Concentration, gr/dscf[a]		Mass particulate emission rates[b]		
				Filterable		Condensible
		Filterable	Condensible	lb/h	lb/ton	lb/h
SP-1	7/9	0.0426	c	8.70	1.91	c
SP-2	7/9	0.0394	c	8.20	1.87	c
SP-3	7/9	0.0315	0.006	6.61	1.76	1.25
Average		0.0378	-	7.84	1.85	-

[a] Grains per dry standard cubic foot at 68°F and 29.92 in. Hg.

[b] Emission rate in pounds per hour and pounds per ton of dry sludge solids.

[c] Impinger solutions lost during sample recovery.

The filterable particulate reported in Table 2-1 represents the material collected on the filter and in the probe, which were heated to approximately 250°F during sample collection. The condensible fraction is the material that passed through the filter and condensed in the impinger section of the sampling train at 68°F or less.

TABLE 2-3. PROCESS DATA

Run No.	Date and time	Bulk sludge feed rate,[a] lb/h	Sludge dry solids content,[b]	Sludge ash content, % dry basis	Dry solids feed rate, lb/h	Particulate emissions, lb/ton dry sludge solids	No. 1 hearth exit gas temperature, °F	Venturi pressure drop, in. H_2O
SP-1	7/9/85, 1029-1156	17,322	52.51	42.59	9096	1.91	1450	20
SP-2	7/9/85, 1348-1506	16,727	52.48	43.04	8778	1.87	1450	20
SP-3	7/9/85, 1555-1739	14,376	52.21	42.21	7506	1.76	1450	20

[a] The average sludge feed rate for the test interval was calculated from the hourly rate in tables contained in Appendix F.

[b] Sludge solids are from composites taken during the test intervals (a composite consisted of two or three grab samples).

3

SECTION 4

PROCESS DESCRIPTION AND OPERATION

The Little Miami Wastewater Treatment Plant of the Metropolitan Sewer District of Greater Cincinnati operates two municipal sewage sludge incinerators. Thermally thickened sludge is dewatered by vacuum filtration prior to incineration in one of two identical nine-hearth units. Only one incinerator operates at any time. Exhaust gases can be directed to a common waste-heat boiler before treatment; however, the heat-recovery system has never been used. Each incinerator is controlled by a medium-energy venturi scrubber (approximately 20 in.H_2O pressure drop) and a mist eliminator that clean the gas before it exits through a common brick stack. During equipment malfunctions, exhaust gases can be routed to an emergency bypass stack upon leaving the incinerator. Auxiliary fuel oil burners at different hearth levels are operated as necessary to maintain sludge combustion. The burner at the top hearth serves as an afterburner, which maintains an exit gas temperature of at least 1300°C for odor control to comply with the Cincinnati Air Pollution Code requirements that were effective at the time construction was initiated.

Maximum design feed rates are 7500 pounds per hour of dry sludge solids (25,000 lb/h bulk sludge at 30 percent solids). A process flow diagram is shown in Figure 4-1.

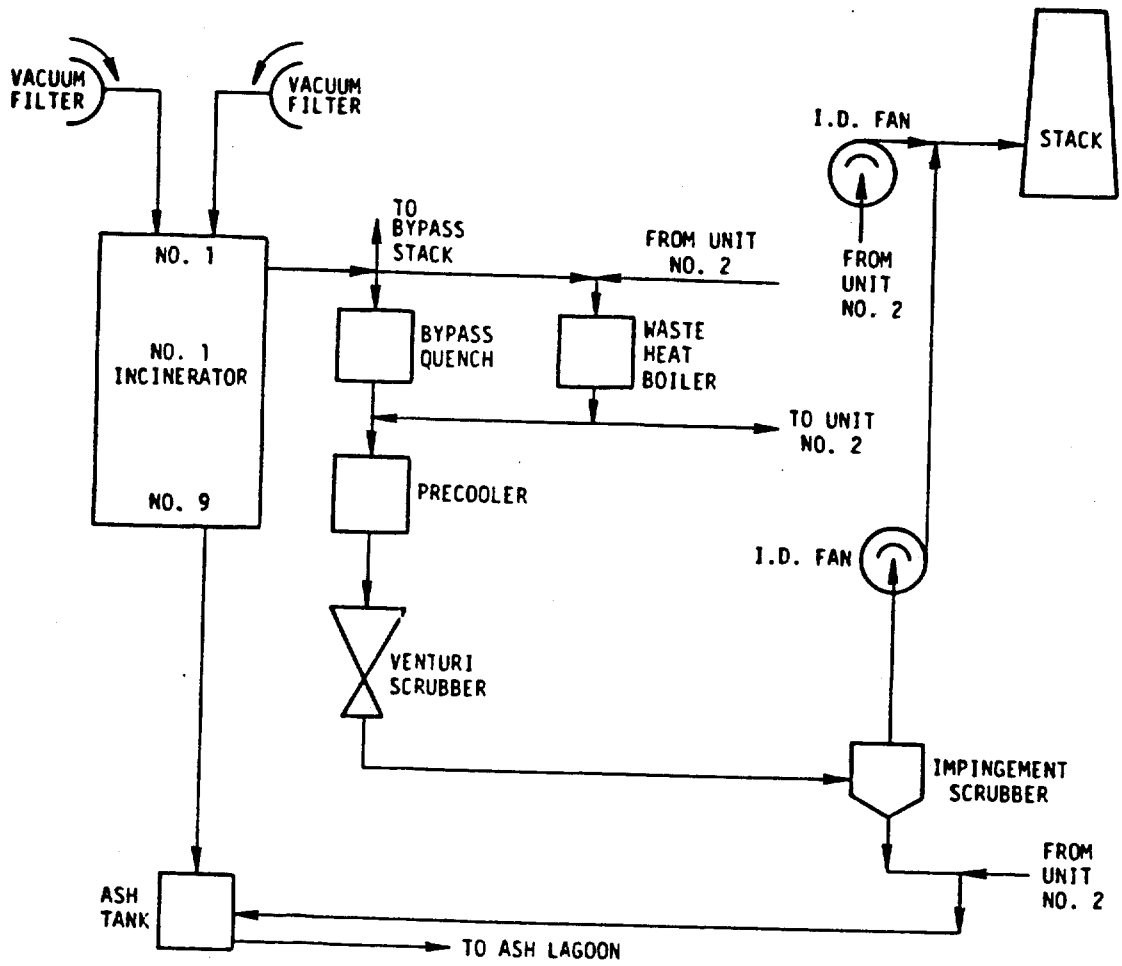

Figure 4-1. Process flow diagram.

5

STAPPA/ALAPCO
2.5

logged 5/28/86
(#14) 22d

SUMMARY OF SOURCE EMISSIONS DATA

Facility	-	MSD-Mill Creek Treatment Plant
Location	-	Cincinnati, Ohio
Source	-	Sewage Sludge Incinerator #4
Test Date	-	1-9-86
Test Purpose	-	Compliance test for particulate matter
Test Method	-	US EPA Ref. Methods 1-5
Emission Rate	-	.0128 gr/dscf, 1.70 pounds/hour and 0.75 pound/ton dry sludge
Production Rate	-	4512 pounds/hour dry sludge
Type of Control	-	Impingement scrubber (9 inches H_2O)
Sampling Location	-	Exit of #4 scrubber stack
Comments	-	

SECTION 2

SUMMARY OF RESULTS

Table 2-1 presents the particulate emission data collected during the sampling period. Particulate concentrations are reported in grains per dry standard cubic foot, and emission rates in pounds per hour, pounds per 100 pounds of sludge charged, and pounds per ton of dry sludge feed. Example calculations are presented in Appendix A.

TABLE 2-1. PARTICULATE EMISSIONS DATA

Run No.	Sampling date (1986)	Concentration, gr/dscf[a]		Mass emission rates[b]			
				Filterable			Condensible
		Filterable	Condensible	lb/h	lb/ 100 lb	lb/ ton	lb/h
MCSP-1	1/9	0.0127	0.0031	1.71	0.0112	0.80	0.41
MCSP-2	1/9	0.0113	0.0043	1.52	0.0095	0.69	0.58
MCSP-3	1/9	0.0143	0.0048	1.88	0.0116	0.77	0.63
Average		0.0128	0.0041	1.70	0.0108	0.75	0.54

[a] Grains per dry standard cubic foot at 68°F and 29.92 in. Hg.

[b] Emission rate in pounds per hour, pounds per 100 pounds of sludge charged, and pounds per ton of dry sludge solids.

The filterable particulate reported in Table 2-1 represents the material collected on the filter and in the probe, which were heated to approximately 250°F during sample collection. The condensible fraction is the material that passed through the filter and condensed in the impinger section of the sampling train at 68°F or less.

TABLE 2-4. PROCESS DATA

Run No.	Date and time	Bulk sludge feed rate,[a] lb/h	Sludge dry solids content, %[b]	Total solids feed rate, lb/h	Volatile solids content, %[c]	Volatile solids feed rate, lb/h	Particulate emissions	
							lb/ton	lb/100 lb
MCSP-1	1/9/86, 1011-1128	15,210	28.0	4259	59.1	2517	0.80	0.0112
MCSP-2	1/9/86 1246-1358	15,933	27.6	4398	60.5	2661	0.69	0.0095
MCSP-3	1/9/86 1450-1601	16,158	30.2	4880	60.9	2972	0.77	0.0116
Average		15,767	28.6	4512	60.2	2717	0.75	0.0108

[a] The average sludge feed rate for the test interval was calculated from data supplied by plant personnel.

[b] Sludge solids are from composites taken during the test intervals (a composite consisted of four grab samples).

[c] Volatile solids is a percentage of total solids.

TABLE 2-5. SLUDGE ANALYTICAL DATA

Run No.	Date (1986)	Moisture, %	Sulfur %		Heating value, Btu/lb	
			As recieved	Dry	As recieved	Dry
MCSP-1	1/9	69.5	0.21	0.70	2003	6572
MCSP-2	1/9	69.9	0.13	0.42	1898	6297
MCSP-3	1/9	70.2	0.11	0.36	2398	6556

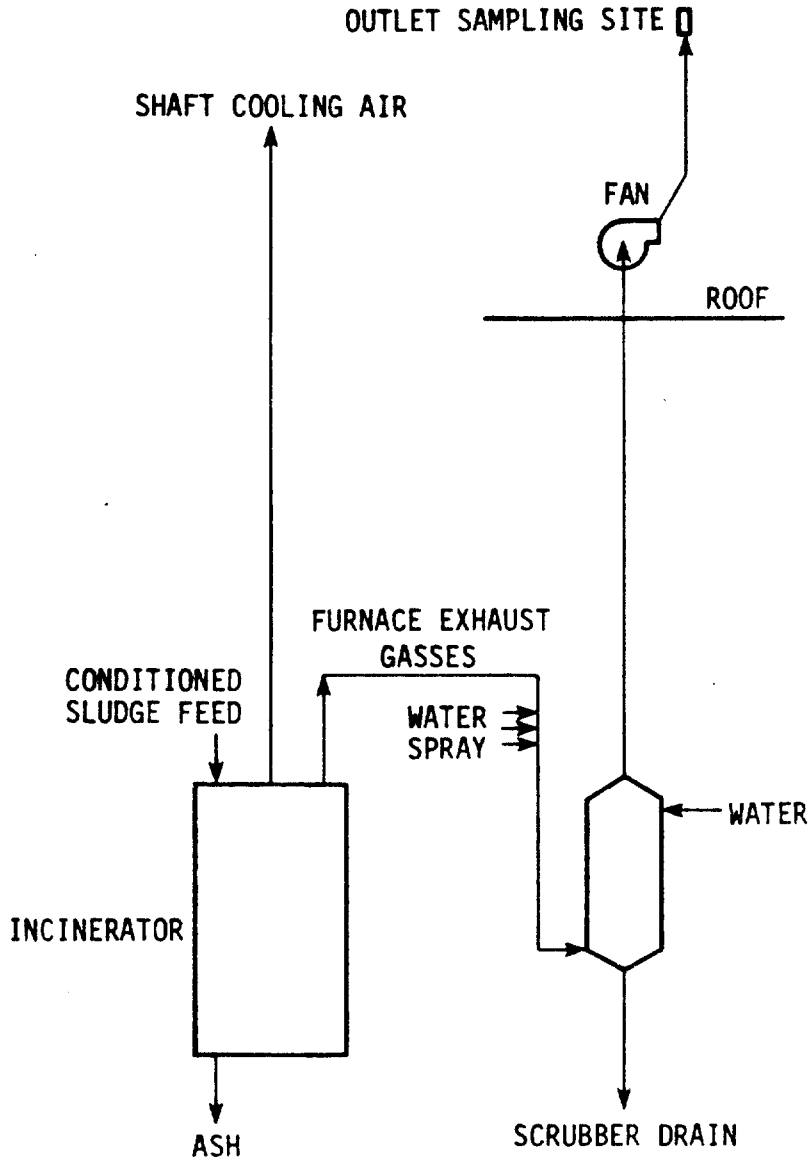

Figure 4-1. Incinerator No. 4 process flow diagram.