logged 5/22/86 (#11)

STAPPA/ALAPCO 2.5

BR 2.2 #17 4.0

Note: This material is related to a section in *AP42, Compilation of Air Pollutant Emission Factors, Volume I Stationary Point and Area Sources.* AP42 is located on the EPA web site at www.epa.gov/ttn/chief/ap42/

The file name refers to the file number, the AP42 chapter and then the section. The file name "rel01_c01s02.pdf" would mean the file relates to AP42 chapter 1 section 2. The document may be out of date and related to a previous version of the section. The document has been saved for archival and historical purposes. The primary source should always be checked. If current related information is available, it will be posted on the AP42 webpage with the current version of the section.

PERFORMANCE TEST REPORT FOR THE INCINERATION SYSTEM AT THE HONOULIULI WASTEWATER TREATMENT PLANT AT HONOULIULI, OAHU, HAWAII ZIMPRO NO. 21-0441/41.1 CHEMICALLY CONDITIONED SLUDGE TEST

BLB:bb
ARI-9
January/1984
Revised February/1984

ZIMPRO INC.
ENVIRONMENTAL CONTROL SYSTEMS
SUBSIDIARY OF STERLING DRUG INC.
ROTHSCHILD, WISCONSIN USA 54474
PHONE 715/359-7211 TELEX 29-0495

2.3 Emissions Test Results

Material Incinerated: Chemically Conditioned Sludge

Test	Cake Rate Wet (lbs/hr)	Cake Solids (%)	Solids Emissions (Filterable)① lbs/dry ton	lbs/100 lbs dry	Solids Emissions (Total)② lbs/wet ton	lbs/100 lbs wet	Isokinetic③ Ratio (%)	Stack Opacity④	Dust Conc. at Scrubber Disch. (grams/scf)	Excess Air⑤ Flue Gas %	Flue Gas Flow (adcfm)
A	3255	30.2	0.18	0.009	0.19	0.010	104.0	0.2	0.0028	110.4	3665
B	3195	28.1	0.20	0.010	0.22	0.011	101.0	0.0	0.0028	116.5	3576
C	3420	27.1	0.26	0.013	0.23	0.012	102.0	0.3	0.0030	118.8	3717
Avg.	-----	----	0.21	0.011	0.21	0.011	102.3	< 0.2	0.0031	115.1	3653

① Filterable particulate is the front half. Must be less than 1.3 lbs/ton.

② Total particulate is the front and back half combined. Must be less than 4 lbs/wet ton.

③ Must fall between 90% and 110%.

④ Must be less than 20%.

⑤ Calculated by equation - percent excess air = $100 \times \left[\frac{(\% O_2 \ [dry])}{(21 - O_2 \ [dry])}\right]$

A 24-hour composite sample of sludge was tested for mercury content and found to contain 0.232 ug/g, of mercury.

This calculates to be 2.90 grams per day, which is less than EPA maximum of 1600 grams per day.

The odor content of the offgases in odor units/scf was 23.

APPENDIX A
EMISSIONS TEST RESULTS

Emission Test Results

Three (3) separate emissions tests were conducted on the incinerator while burning chemically conditioned sludge cake. The testing was conducted by Ultrachem Corporation, a Division of ERG, Emeryville, CA. The sampling procedure for particulate emissions was taken from the EPA manual for "Standards of Performance for New Stationary Sources", (EPA-340/1-76-009) Methods 1 through 5. The test results are summarized in Table A-1. The calculations are attached at the end of the appendix.

The average filterable particulate emission discharge rate (P.E.D.R.) was 0.21 lbs/dry ton (0.011 lbs/100- dry lbs). The maximum allowable P.E.D.R. is 1.3 lbs of particulate per ton of dry solids. The total particulate discharge rate (front and back half) was 0.21 lbs/wet ton (0.011 lb/100 lbs-wet). The maximum allowable by Hawaiian state standards is 4.0 lbs/wet-ton.

The stack opacity averaged < 0.2% during the testing.

To determine the mercury discharge rate from the incinerator, EPA Regulations for National Emission Standards for Hazardous Air Pollutants - 40 CFR 61; 38FR 8820, April 6, 1983 revised 48 FR 3735 - January 27, 1983, Subpart E - National Emission Standard for Mercury, Section 61.54 - Sludge sampling, was used.

A composite sample consisting of 24 hourly grab samples was analyzed for mercury and total solids.

The composite sludge sample from 2000 hours on Tuesday December 13, 1983 to 2000 hours on Wednesday December 14, 1983 had the following characteristics.

Mercury Content - 0.232 micrograms/gram of dry sludge

Cake Total Solids - 23.4%

The complete data is contained in Appendix F.

The mercury emissions were determined from the following equation taken from the above reference.

$$E_{Hg} = (1 \times 10^{-3}) C\ Q$$

Where:

E_{Hg} = Mercury emissions g/day

C = Mercury concentration of sludge on a dry basis ug/g

Q = Sludge charging rate Kg/day

$$E_{Hg} = 1 \times 10^{-3} \times 0.232 \frac{ug}{g} \times 1147 \frac{lbs\ dry\ solids}{hr} \times \frac{1Kg}{2.2\ lbs} \times 24 \frac{hr}{day}$$

$$E_{Hg} = 2.90 \text{ grams Hg/day}$$

The above dry solids loading rate is based on case 4 from Table 1 on page 1507-8 of the specifications. This value is the maximum dry solids loading to the incinerator. Based on the above reference section 61.55 - Emission Monitoring, the maximum allowable mercury discharge must be less than 1600 g/day. If the rate would be above this value, monitoring for mercury emissions at a minimum of one year intervals must be conducted.

Honouliuli, Oahu, Hawaii

Table A-1

Emissions Discharge Rate Results

Test	Cake Rate Wet (lbs/hr)	Cake Solids (%)	Solids Emissions (Filterable)[1] lbs/dry ton	lbs/100 lbs dry	Solids Emissions (Total)[2] lbs/wet ton	lbs/100 lbs wet	Isokinetic[3] Ratio (%)	Stack Opacity[4]	Dust Conc. at Scrubber Disch. (grams/scf)	Excess Air[5] Flue Gas %	Flue Gas Flow (sdcfm)
A	3255	30.2	0.18	0.009	0.19	0.010	104.0	0.2	0.0028	119.0	3665
B	3195	28.1	0.20	0.010	0.22	0.011	101.0	0.0	0.0028	116.5	3576
C	3420	27.1	0.26	0.013	0.23	0.012	102.0	0.3	0.0030	118.8	3717
Avg.	-----	----	0.21	0.011	0.21	0.011	102.3	< 0.2	0.0031	115.1	3653

(1) Filterable particulate is the front half. Must be less than 1.3 lbs/ton.

(2) Total particulate is the front and back half combined. Must be less than 4 lbs/wet ton.

(3) Must fall between 90% and 110%.

(4) Must be less than 20%.

(5) Calculated by equation - percent excess air = $100 \times \left[\frac{(\% O_2 - [dry])}{(21 - O_2 [dry])}\right]$

A 24-hour composite sample of sludge was tested for mercury content and found to contain 0.232 ug/g, of mercury.

This calculates to be 2.90 grams per day, which is less than EPA maximum of 1600 grams per day.

The odor content of the offgases in odor units/scf was 23.

DETAILED STACK TESTING RESULTS
FROM THE INDEPENDENT LAB

ULTRA CHEM

ULTRACHEM
A Division of Environmental Research Group, Inc.
1400 53rd Street Emeryville, California 94608 (415) 652-2300

ZIMPRO
ENVIRONMENTAL CONTROL SYSTEMS
MILITARY ROAD
ROTHSCHILD, WI 54474

REPORT #2446-3

TEST LOCATION: Honouluili Wastewater Treatment Plant
Ewa, Hawaii

TEST DATE: December 13, 1983

REQUESTED BY: Zimpro
Environmental Control System
Military Road
Rothschild, WI 54474

SUBMITTED BY: R. R. Ullerich
Environmental Testing Services
Ultrachem, A Division of Environmental
Research Group

REPORT DATE: January 3, 1983.

Table of Contents for Stack Test Report

	Page
Introduction.	16
Summary of Results.	16
Sampling Program.	17
Testing Procedures.	19
Emissions Test Results (EPA Method)	21
Emissions Test Results (State of Hawaii Method)	22
Opacity Test Results.	23
Particulate Distribution Data	21 - 22
Wet Sludge Feed Rates to Incinerator.	24
Section I Flue Gas Flow Rate Data	26
Section II Air Pollution Log Sheets.	39
Section III Schematic of Sampling Equipment	50
Section IV Equations for Calculations.	53
Section V Stack Schematic	57
Section VI Pre-Test Calibration Data	59
Section VII Post-Test Calibration Date.	73

ENVIRONMENTAL RESEARCH GROUP, INC.

1400 53rd Street Emeryville, California 94608 (415) 652-2300

January 3, 1984

Zimpro
Environmental Control Systems
Military Road
Rothschild, WI 54474

Attention: Bruce L. Brandenburg

Report #2446-3

Subject: Sampling and analyses of air pollutant effluent from multihearth sewage sludge incinerator to demonstrate compliance with:

1) The U.S. Environmental Protection Agency (EPA) new source performance standard as given in CFR-Title 40: Part 60: Subpart O; Section 60.150 to 60.154, and

2) Rules and Regulations of the State of Hawaii Air Pollution Regulations as given in Chapter 43 of the Hawaii Environmental Laws and Regulations.

Sampling Site: Honouluili Waste Water Treatment Plant, Hawaii.

Sampling Date: December 13, 1983.

Sampling Personnel: R. R. Ullerich and B. Hunt of Ultrachem a division of ERG collected stack emission samples.

Observing Personnel: Cedric S. Takamoto of the State of Hawaii and Kent Kithingman from U.S. Environmental Protection Agency.

Submitted Samples: Feed samples were collected by Zimpro personnel. The feed material being charged to the furnace as chemically conditioned sewage sludge.

Summary of Results:

1) The unit as tested complied with particulate emission rate limitations of the Hawaii State Air Pollution Regulations. This limitation is 0.2 pounds per 100 pounds of refuse charges. The average emissons were 0.01 pounds/100 pounds.

2) The unit as tested complied with the opacity limitation of 20% in CFR Title 40: Part 60: Subpart O: Section 60.152. Standard of Performances for Sewage Treatment Plants for all test periods.

Ann Arbor Chicago Cleveland San Francisco Minneapolis-St. Paul

3) This unit as tested complied with the particulate matter emission rate of 1.3 lb/ton of dry sludge as given in CFR Title 40; Part 60; Subpart O; Section 60.152. The average emission rate of particulate matter was found to be 0.21 lb/ton of dry sludge.

Sampling Program:

Three consecutive tests were conducted on the exhaust stack. During each test, measurements were made for the following parameters: Particulate matter, oxygen, carbon dioxide, water vapor, and exhaust stack volume flow.

A chronological summary of tests conducted is as follows:

Test	Date	Time of Test Exhaust Stack
A	12/13/83	0832-0954
B	12/13/83	1021-1132
C	12/13/83	1156-1319

$\frac{17.5}{12} = 1.46 \times 8 =$ 11.7 feet

Sampling Stations:

→ 6.75 duct Ø

The circular 17.5 inch I.D. exhaust stack was fitted with two 3-inch diameter ports at 90 degrees. These openings in the stack were in a horizontal plane 9'-10" feet above the last bend in the stack and three feet below the top of the stack. (See Appendix 5).

From Method 1, 16 traverse points req'd

$\frac{3}{1.46} = 2.1$ duct Ø

Sampling Procedures - Source Test:

Sampling methods were as described in Environmental Protection Agency (EPA) methods 1, 2, 3 and 5 given in the Code of Federal Regulations: 40 CFR 60, Appendix A.

Exhaust Stack:

Prior to sampling, the velocity of the gas was determined at each of the specified traverse points by a special pitot tube and magnehelic differential pressure gage. The gas temperature was measured with a potentiometer and thermocouple. A traverse was made across the duct over both diameters. This traverse was used for preliminary sampling information and nozzle selection and not used for particulate emission calculations.

For the selection of the location of the traverse points for velocity measurements, methods I was used. A total of sixteen traverse points were used.

OK

For all particulate tests, the particulate sampling train used was a "Modified EPA Method 5" particulate sampling train assembled to meet all sampling requirements of Method 5. The train consisted of an in-stack filter followed by a probe assembly and cooled water-filled impingers, with attached apparatus for collection samples for measurement of CO_2 and O_2 and an attached pitot tube for monitoring velocities and maintaining isokinetic sampling rates. An illustration of the particulate sampling train is attached. (Appendix 3).

The particulate matter sampling train consisted of the following components connected in series: A specially sized glass nozzle connected to two pre-weighed glass tubes filled with glass wool and a type 5A. 1 1/2 inch diameter glass fiber filter contained with a pump, and a dry gas test meter to measure the sampled gas volume.

The filter portion of the sampling train was maintained at 225 to 275 degrees F to prevent condensation of moisture.

The first two impingers contained distilled water to collect condensible particulate matter, while the third was empty and the fourth contained silica gel. The temperature around all impingers was controlled with ice to maintain the temperature of the empty impingers below 70°F. The increase in water volume in the impingers and in the weight of the silica gel at the conclusion of the test was used to calculate the water vapor content of the sampled gas.

The gas sample was aspirated through the particulate sampling train at the isokinetic rate computed from the velocity monitored with the pitot tube adjacent to the sampling nozzle. All pertinent test parameters were recorded at 4-minute intervals during each test.

Additional simultaneous samples were collected for the measurement of gaseous hydrocarbons, oxygen and carbon dioxide. Samples for each of these tests were taken through an individual stainless steel sampling tube inserted directly into the gas stream, and positioned adjacent to the particulate sampling nozzle and pitot tube.

All sampling data are appended to this report. (Appendix 1 and 2).

Opacity Monitoring Procedures:

All opacity readings were made according to EPA Method 9 as published in November 12, 1974, Federal Register. Readings were made by R. R. Ullerich who certified by the California Air Resources Board under a training program recognized by the EPA; most recent recertification was August 1983.

The stack was continously observed during each test period for one half hour during test A and B and 20 minutes during test C. The tabulated results include a rating of viewing conditions for each test. A rating of "excellent" would require:

- Observer at a distance from plume approximately equal to relative stack-heights
- Sun at the observer's back
- Wind perpendicular to line of sight
- Plume free of condensed steam
- Plume of uniform and fairly steady opacity
- Emission point well defined
- Plume background of color contrasting with plume color
- Plume illumination steady and adequate
- Interfering plumes and other view-obstructions absent

The ratings are included as an aid in evaluating the accuracy of the readings. Each reading is recorded to nearest 5%. In EPA studies referenced in Method 9, 99% of black plumes and 95% of white plumes were read with a positive error of less than 5% opacity.

Analytical Procedures - Source Test:

Particulate Matter: The filter tubes containing the filters were dried in an oven at 105°C for two hours, dessiccated over drierite, and weighted on an analytical balance. Water and acetone washings from the nozzle and probe were dried and weighed in a similar manner. This constitutes "total particulate" according to the EPA definitions and will also be referred to in this report as "probe and filter" particulate or "front half" particulate.

Water samples from the impingers combined with acetone washings of connecting tubing were dried at 105 C and all containers were desiccated to a constant weight, and weighed on an analytical balance. This portion is generally referred to as "condensible" particulate, or "back half" particulate. The sum of the front half and back half constitute total particulate matter by State of Hawaii definitions.

Carbon Dioxide, and oxygen: Carbon Dioxide and Oxygen were determined on the gas tank samples with an Orsat volumetric gas analyzer, according to EPA Method 3.

Total hydrocarbons and methane were determined on the gas tank sample by direct injection into a gas chromatograph with a flame ionization detector.

Feed Material Analyses:

The following analyses were performed:

1) Proximate Analyses: Percent moisture, volatiles and ash.

This was done by drying an aliquot of the composite sample for each test period at 105°C to constant weight. The portion lost is considered moisture content.

The dried aliquot was then ashed to 550°C to a constant weight. The percent loss on ignition is considered to be percent volatile or combustibles, percentage of remaining material to be percent ash.

2) Heating Value (BTU Content) was determined by bomb colorimetry on a composite sludge sample as submitted.

Comments: The heating value (BTU Content) was also determined on a sample of fuel oil being used as auxilliary fuel in the furnace.

Submitted by,

R. K. Ullerich by E H Gallagher

R. R. Ullerich
Project Supervisor

RRU/ses

Report #2446-3 Report Date: 1/3/83

ULTRACHEM CORPORATION

AIR POLLUTION ANALYSIS

Client: Zimpro

EPA

Location Tested: Honouluili W.W.T.F.

Test No: EPA Format A, B, & C

Test Date: 12/13/83

--TABULATED RESULTS--

Test	A	B	C	AVERAGE	LIMIT
Velocity, Ft/sec.(average)	42.5	41.1	43.1		
Duct Temperature; Pitot Traverse/Part. sample; ^{o}F	117	114	116		
Volume Flow, CFM	4258	4118	4,318		
Volume Flow, SDCFM	3665	3576	3,717		
Water Vapor, volume, % H_2O	6.5	6.2	6.6		
Oxygen, volume, % O_2 (dry basis)	11.0	11.3	11.4		
Carbon Dioxide, vol. % CO_2 (dry)	7.6	7.5	7.2		
Carbon Monoxide, vol. ppm CO (dry basis)	-	-	-		
Time of Sampling	0832-0954	1021-1132	1156-1319		
Duration of Test; Minutes	80	64	80		
Sampled Volume, SDCF	34.82	46.56	35.20		
Particulate Matter; Filter catch					
Weight of sample; grams	0.0064	0.0083	0.0087		
Particulate Conc., grains/SDCF	0.0028	0.0028	0.0038		
Particulate Emissions Lb/Hour	0.09	0.09	0.12		
Particulate Emissions Lb/Ton (dry)	0.18	0.20	0.26	0.21	1.3
Particulate Emissions Lb/100 Lb (dry)	0.009	0.010	0.013		
Charging Rate to Furnace Lb/Hour (wet)	3,255	3,195	3,420		
Charging Rate to Furnace Lb/Hour (dry)	983	898	927		
Solids content of charge	30.2%	28.2%	27.1%		
Opacity (average)	0.2%	-0-	0.3%		20%

Report #2446-3 ULTRACHEM CORPORATION

Report Date: 12/29/83

AIR POLLUTION ANALYSIS

State of Hawaii

CLIENT: Zimpro
TEST NO. Hawaii Format: A, B, & C

Location tested: Honouluili W.W.T.F.
Test Date: 12/13/83

--TABULATED RESULTS--

TEST	A	B	C	AVERAGE	LIMITATION
Velocity, Ft/see. (average)	42.5	41.1	43.1		
Duct Temp; Pitot trav./Part.sample °F	117	114	116		
Volume Flow, CFM	4258	4118	4318		-
Volume Flow, SDCFM	3665	3576	3717		
Water Vapor, vol, % H_2O	6.5	6.2	6.6		
Oxygen, vol. % O_2 (dry basis)	11.0	11.3	11.4		
Carbon Dioxide, vol. % CO_2 (dry)	7.6	7.5	7.2		
Carbon Monoxide, vol. ppm CO (dry basis)					
Time of Sampling	0832-0954	1021-1132	1156-1319		
Duration of test; Minutes	80	64	80		
Sampled Volume, SDCF	34.82	46.56	35.20		
Total particulate; filter and impinger catches					
Weight of sample; grams	0.0224	0.343	0.0289		
Particulate Conc., grains/SDCF	0.0099	0.0114	0.0127		
Particulate Emissions Lb./Hour	0.31	0.35	0.40		
Particulate Emissions Lb/Ton (Wet)	0.19	0.22	0.23	0.21	4.0
Particulate Emissions Lb/100 lb wet	0.010	0.011	0.012	0.01	0.2
Charging Rate to Furnace Lb/Hr. (wet)	3,255	3,195	3,420		

AP-2A

ULTRACHEM CORPORATION

AIR POLLUTION ANALYSIS
VISIBLE EMISSIONS EVALUATION

Client Zimpro, Inc.

Location Honouluili

Type Facility Sewage Sludge Incinerator

Emission Point Exhaust Stack

Control Device Venturi Scrubber

Test Date 12/13/83

Test No. A, B, & C

Observer R. R. Ullerich

Recertification Date August 1983

Certifying Agency California ARB

TABULATED RESULTS

Set #	Time Start-End	# of Readings	% Opacity Avg	% Opacity Range	Compliance Status	Observer Position	Viewing Conditions	Remarks
A	0840-0910	240	.2	0-5	PASS	30 ft/stack	POOR	Over cast
B	1050-1120	240	-0-	-0-	PASS	30 ft/stack	POOR	Over cast
C	1205-1223	76	.3	0-5	PASS	30 ft/stack	POOR	Over cast

SUMMARY SHEET #1
WET SLUDGE FEED RATES TO FURNACE

Zimpro
Report #2446-3
Test Date: December 13, 1983

SUMMARY SHEET

CHARGE RATE

TEST	TIME	BELT SCALE	TOTAL LBS. (WET)	LBS./HOUR (WET)
A	0830-1000	856085 860968	4,883	3,255
B	1020-1130	861974 865702	3,728	3,195
C	1200-1320	867368 871928	4,560	3,420

SECTION I
FLUE GAS FLOW RATE DATA

ULTRACHEM/ERG

Client : ZIMPRO Date Tested :12/13/83

Test No. :EPA FORMAT "A" Time :0832-0954

Gas Flow Rate Data

Point	h	T.	Vel.Ft/Sec
8 EAST	.6	118	44.3
7	.62	119	45.1
6	.62	119	45.1
5	.62	119	45.1
4	.66	119	46.5
3	.66	119	46.5
2	.64	119	45.8
1	.46	117	38.8
8 SOUTH	.63	115	45.3
7	.68	117	47.1
6	.63	115	45.3
5	.62	115	44.9
4	.45	117	38.3
3	.54	117	42
2	.44	117	37.9
1	.15	117	22.1

Vs = Cp [h *(T + 460)]^.5 [1/M.W. * Ps]^.5 * 85.49

Conc. of CO2 = 7.6 % Conc. of O2 = 11 %

Conc. of H2O = 6.5 %

Avg. Gas Velocity; Vs, Avg. 42.5 Ft/Sec

Pitot Tube Correction Factor, Cp .82

Duct Gas Molecular Weight, M.W. 29.02

Duct Pressure, Ps. 29.91 "Hg Barometric Pressure 29.93 "Hg

Duct Size Round 17.5 In. Diameter Static Pressure -.3 "H2O

Duct Area 1.67 Sq. Ft Avg. Gas Temp. 117

Gas Flow Rate 42.5 Ft/Sec * 1.67 Sq. Ft * 60 = 4258 CFM

4258 CFM* 530 / 577 * 29.91 /29.92*(1.00- 6.5 /100%H2O)= 3665 SDCFM

M.W. Factor = .0339 Standard Cond. Temp. 70

ULTRACHEM/ERG

Client : ZIMPRO Date Tested : 12/13/83

Test No. : EPA FORMAT "A" Time : 0832-0954

GAS FLOW DATA

Sample Points 1-8 SOUTH&EAST

Barometric Pressure 29.93 Sample Nozzle Area .00019 ft^2

Duct Pressure 29.91 ''Hg Condensate 51 ml.

Avg. Gas Meter Pressure .4 in.Hg Vol. of Gas Samples 34.89 CF

Avg Gas Meter Temp 78 F Avg Duct Temp 117 F

Wgt. Collected .0064 Gms. Duration of Test 80 Min.

Avg. Velocity at Sampling Pts 42.5 ft/sec.

Calculations

Condensed Water Vapor:

vw = 0.00267 * 51 * (460 + 70)/29.92 = 2.41 SCF

Corrected Meter Volume:

Vo = 34.89 * 30.31 / 29.92 * 530 / 538 = 34.82 SDCF

Percent Water Vapor:

% H2O = 2.41 / 37.23 * 100 = 6.5 %

Particulate Concentration (Grain Loading):

Go = (.0064 Gms. * 15.43)/ 34.82 SDCF = .0028 Grs/SDCF

Particulate Emission Rate:

(.0028 Grs/SDCF * 3665 SDCFM * 60)/7000 = .09 Lbs/Hr.

Percentage of Isokinetic Sampling Attained: %I = 104 %

ULTRACHEM/ERG

Client : ZIMPRO Date Tested : 12/13/83

Test No. : EPA FORMAT "B" Time : 1021-1132

GAS FLOW DATA

Sample Points 1-8 SOUTH&EAST

Barometric Pressure 29.93 Sample Nozzle Area .000335 ft^2

Duct Pressure 29.91 "Hg Condensate 65 ml.

Avg. Gas Meter Pressure .9 in.Hg Vol. of Gas Samples 46.24 CF

Avg Gas Meter Temp 82 F Avg Duct Temp 114 F

Wgt. Collected .0083 Gms. Duration of Test 64 Min.

Avg. Velocity at Sampling Pts 41.1 ft/sec.

Calculations

Condensed Water Vapor:

vw = 0.00267 * 65 * (460 + 70)/29.92 = 3.07 SCF

Corrected Meter Volume:

Vo = 46.24 * 30.81 / 29.92 * 530 / 542 = 46.56 SDCF

Percent Water Vapor:

% H2O = 3.07 / 49.64 * 100 = 6.2 %

Particulate Concentration (Grain Loading):

Go = (.0083 Gms. * 15.43)/ 46.56 SDCF = .0028 Grs/SDCF

Particulate Emission Rate:

(.0028 Grs/SDCF * 3576 SDCFM * 60)/7000 = .09 Lbs/Hr.

Percentage of Isokinetic Sampling Attained: %I = 101 %

ULTRACHEM/ERG

Client : ZIMPRO Date Tested :12/13/83

Test No. :EPA FORMAT "B" Time :1021-1132

Gas Flow Rate Data

Point	h	T.	Vel.Ft/Sec
8 SOUTH	.64	115	45.6
7	.64	115	45.6
6	.66	117	46.4
5	.61	116	44.6
4	.61	118	44.7
3	.48	114	39.5
2	.4	114	36
1	.17	112	23.5
8 EAST	.52	114	41.1
7	.52	114	41.1
6	.52	113	41.1
5	.52	112	41
4	.6	112	44.1
3	.6	113	44.1
2	.59	113	43.7
1	.4	112	36

Vs = Cp [h *(T + 460)]^.5 [1/M.W. * Ps]^.5 * 85.49

Conc. of CO2 = 7.5 % Conc. of O2 = 11.3 %

Conc. of H20 = 6.2 %

Avg. Gas Velocity; Vs, Avg. 41.1 Ft/Sec

Pitot Tube Correction Factor, Cp .82

Duct Gas Molecular Weight, M.W. 29.04

Duct Pressure, Ps. 29.91 ''Hg Barometric Pressure 29.93 ''Hg

Duct Size Round 17.5 In. Diameter Static Pressure -.3 ''H20

Duct Area 1.67 Sq. Ft Avg. Gas Temp. 114

Gas Flow Rate 41.1 Ft/Sec * 1.67 Sq. Ft * 60 = 4118 CFM

4118 CFM* 530 / 574 * 29.91 /29.92*(1.00- 6.2 /100%H20)= 3576 SDCFM

M.W. Factor = .0339 Standard Cond. Temp. 70

ULTRACHEM/ERG

Client : ZIMPRO Date Tested :12/13/83

Test No. :EPA FORMAT "C" Time :1156-1319

Gas Flow Rate Data

Point	h	T.	Vel.Ft/Sec
8 EAST	.6	118	44.4
7	.6	116	44.3
6	.6	119	44.4
5	.62	119	45.1
4	.64	119	45.9
3	.72	119	48.6
2	.62	118	45.1
1	.46	118	38.8
8 SOUTH	.64	115	45.7
7	.7	116	47.8
6	.61	114	44.6
5	.54	115	42
4	.57	113	43.1
3	.48	114	39.5
2	.42	113	37
1	.34	114	33.3

Vs = Cp [h *(T + 460)]^.5 [1/M.W. * Ps]^.5 * 85.49

Conc. of CO2 = 7.2 % Conc. of O2 = 11.4 %

Conc. of H20 = 6.6 %

Avg. Gas Velocity; Vs, Avg. 43.1 Ft/Sec

Pitot Tube Correction Factor, Cp .82

Duct Gas Molecular Weight, M.W. 28.95

Duct Pressure, Ps. 29.91 ''Hg Barometric Pressure 29.93 ''Hg

Duct Size Round 17.5 In. Diameter Static Pressure -.3 ''H20

Duct Area 1.67 Sq. Ft Avg. Gas Temp. 116

Gas Flow Rate 43.1 Ft/Sec * 1.67 Sq. Ft * 60 = 4318 CFM

4318 CFM* 530 / 576 * 29.91 /29.92*(1.00- 6.6 /100%H20)= 3717 SDCFM

M.W. Factor = .0339 Standard Cond. Temp. 70

ULTRACHEM/ERG

Client : ZIMPRO Date Tested : 12/13/83

Test No. : EPA FORMAT "C" Time : 1156-1319

GAS FLOW DATA

Sample Points 1-8 EAST&SOUTH

Barometric Pressure 29.93 Sample Nozzle Area .000194 ft^2

Duct Pressure 29.91 ''Hg Condensate 53 ml.

Avg. Gas Meter Pressure .4 in.Hg Vol. of Gas Samples 35.27 CF

Avg Gas Meter Temp 78 F Avg Duct Temp 116 F

Wgt. Collected .0087 Gms. Duration of Test 80 Min.

Avg. Velocity at Sampling Pts 43.1 ft/sec.

Calculations

Condensed Water Vapor:

vw = 0.00267 * 53 * (460 + 70)/29.92 = 2.51 SCF

Corrected Meter Volume:

Vo = 35.27 * 30.31 / 29.92 * 530 / 538 = 35.2 SDCF

Percent Water Vapor:

% H2O = 2.51 / 37.71 * 100 = 6.6 %

Particulate Concentration (Grain Loading):

Go = (.0087 Gms. * 15.43)/ 35.2 SDCF = .0038 Grs/SDCF

Particulate Emission Rate:

(.0038 Grs/SDCF * 3717 SDCFM * 60)/7000 = .12 Lbs/Hr.

Percentage of Isokinetic Sampling Attained: %I = 102 %

ULTRACHEM/ERG

Client : ZIMPRO Date Tested :12/13/83

Test No. :HAWAII FORMAT "A" Time :0832-0954

Gas Flow Rate Data

Point	h	T.	Vel.Ft/Sec
8 EAST	.6	118	44.3
7	.62	119	45.1
6	.62	119	45.1
5	.62	119	45.1
4	.66	119	46.5
3	.66	119	46.5
2	.64	119	45.8
1	.46	117	38.8
8 SOUTH	.63	115	45.3
7	.68	117	47.1
6	.63	115	45.3
5	.62	115	44.9
4	.45	117	38.3
3	.54	117	42
2	.44	117	37.9
1	.15	117	22.1

Vs = Cp [h *(T + 460)]^.5 [1/M.W. * Ps]^.5 * 85.49

Conc. of CO2 = 7.6 % Conc. of O2 = 11 %

Conc. of H2O = 6.5 %

Avg. Gas Velocity; Vs, Avg. 42.5 Ft/Sec

Pitot Tube Correction Factor, Cp .82

Duct Gas Molecular Weight, M.W. 29.02

Duct Pressure, Ps. 29.91 ''Hg Barometric Pressure 29.93 ''Hg

Duct Size Round 17.5 In. Diameter Static Pressure -.3 ''H2O

Duct Area 1.67 Sq. Ft Avg. Gas Temp. 117

Gas Flow Rate 42.5 Ft/Sec * 1.67 Sq. Ft * 60 = 4258 CFM

4258 CFM* 530 / 577 * 29.91 /29.92*(1.00- 6.5 /100%H2O)= 3665 SDCFM

M.W. Factor = .0339 Standard Cond. Temp. 70

ULTRACHEM/ERG

Client : ZIMPRO Date Tested : 12/13/83

Test No. : HAWAII FORMAT "A" Time : 0832-0954

GAS FLOW DATA

Sample Points 1-8 EAST&SOUTH

Barometric Pressure 29.93 Sample Nozzle Area .00019 ft^2

Duct Pressure 29.91 "Hg Condensate 51 ml.

Avg. Gas Meter Pressure .4 in.Hg Vol. of Gas Samples 34.89 CF

Avg Gas Meter Temp 78 F Avg Duct Temp 117 F

Wgt. Collected .0224 Gms. Duration of Test 80 Min.

Avg. Velocity at Sampling Pts 42.5 ft/sec.

Calculations

Condensed Water Vapor:

vw = 0.00267 * 51 * (460 + 70)/29.92 = 2.41 SCF

Corrected Meter Volume:

Vo = 34.89 * 30.31 / 29.92 * 530 / 538 = 34.82 SDCF

Percent Water Vapor:

% H2O = 2.41 / 37.23 * 100 = 6.5 %

Particulate Concentration (Grain Loading):

Go = (.0224 Gms. * 15.43)/ 34.82 SDCF = .0099 Grs/SDCF

Particulate Emission Rate:

(.0099 Grs/SDCF * 3665 SDCFM * 60)/7000 = .31 Lbs/Hr.

Percentage of Isokinetic Sampling Attained: %I = 104 %

ULTRACHEM/ERG

Client : ZIMPRO Date Tested :12/13/83

Test No. :HAWAII FORMAT "B" Time :1021-1132

Gas Flow Rate Data

Point	h	T.	Vel.Ft/Sec
8 SOUTH	.64	115	45.6
7	.64	115	45.6
6	.66	117	46.4
5	.61	116	44.6
4	.61	118	44.7
3	.48	114	39.5
2	.4	114	36
1	.17	112	23.5
8 EAST	.52	114	41.1
7	.52	114	41.1
6	.52	113	41.1
5	.52	112	41
4	.6	112	44.1
3	.6	113	44.1
2	.59	113	43.7
1	.4	112	36

Vs = Cp [h *(T + 460)]^.5 [1/M.W. * Ps]^.5 * 85.49

Conc. of CO2 = 7.5 % Conc. of O2 = 11.3 %

Conc. of H2O = 6.2 %

Avg. Gas Velocity; Vs, Avg. 41.1 Ft/Sec

Pitot Tube Correction Factor, Cp .82

Duct Gas Molecular Weight, M.W. 29.04

Duct Pressure, Ps. 29.91 ''Hg Barometric Pressure 29.93 ''Hg

Duct Size Round 17.5 In. Diameter Static Pressure -.3 ''H2O

Duct Area 1.67 Sq. Ft Avg. Gas Temp. 114

Gas Flow Rate 41.1 Ft/Sec * 1.67 Sq. Ft * 60 = 4118 CFM

4118 CFM* 530 / 574 * 29.91 /29.92*(1.00- 6.2 /100%H2O)= 3576 SDCFM

M.W. Factor = .0339 Standard Cond. Temp. 70

ULTRACHEM/ERG

Client : ZIMPRO Date Tested : 12/13/83

Test No. : HAWAII FORMAT "B" Time : 1021-1132

GAS FLOW DATA

Sample Points 1-8 SOUTH&EAST

Barometric Pressure 29.93 Sample Nozzle Area .000335 ft^2

Duct Pressure 29.91 "Hg Condensate 65 ml.

Avg. Gas Meter Pressure .9 in.Hg Vol. of Gas Samples 46.24 CF

Avg Gas Meter Temp 82 F Avg Duct Temp 114 F

Wgt. Collected .0343 Gms. Duration of Test 64 Min.

Avg. Velocity at Sampling Pts 41.1 ft/sec.

Calculations

Condensed Water Vapor:

vw = 0.00267 * 65 * (460 + 70)/29.92 = 3.07 SCF

Corrected Meter Volume:

Vo = 46.24 * 30.81 / 29.92 * 530 / 542 = 46.56 SDCF

Percent Water Vapor:

% H2O = 3.07 / 49.64 * 100 = 6.2 %

Particulate Concentration (Grain Loading):

Go = (.0343 Gms. * 15.43)/ 46.56 SDCF = .0114 Grs/SDCF

Particulate Emission Rate:

(.0114 Grs/SDCF * 3576 SDCFM * 60)/7000 = .35 Lbs/Hr.

Percentage of Isokinetic Sampling Attained: %I = 101 %

ULTRACHEM/ERG

Client : ZIMPRO Date Tested :12/13/83

Test No. :HAWAII FORMAT "C" Time :1156-1319

Gas Flow Rate Data

Point	h	T.	Vel.Ft/Sec
8 EAST	.6	118	44.4
7	.6	116	44.3
6	.6	119	44.4
5	.62	119	45.1
4	.64	119	45.9
3	.72	119	48.6
2	.62	118	45.1
1	.46	118	38.8
8 SOUTH	.64	115	45.7
7	.7	116	47.8
6	.61	114	44.6
5	.54	115	42
4	.57	113	43.1
3	.48	114	39.5
2	.42	113	37
1	.34	114	33.3

Vs = Cp [h *(T + 460)]^.5 [1/M.W. * Ps]^.5 * 85.49

Conc. of CO2 = 7.2 % Conc. of O2 = 11.4 %

Conc. of H2O = 6.6 %

Avg. Gas Velocity; Vs, Avg. 43.1 Ft/Sec

Pitot Tube Correction Factor, Cp .82

Duct Gas Molecular Weight, M.W. 28.95

Duct Pressure, Ps. 29.91 ''Hg Barometric Pressure 29.93 ''Hg

Duct Size Round 17.5 In. Diameter Static Pressure -.3 ''H2O

Duct Area 1.67 Sq. Ft Avg. Gas Temp. 116

Gas Flow Rate 43.1 Ft/Sec * 1.67 Sq. Ft * 60 = 4318 CFM

4318 CFM* 530 / 576 * 29.91 /29.92*(1.00- 6.6 /100%H2O)= 3717 SDCFM

M.W. Factor = .0339 Standard Cond. Temp. 70

ULTRACHEM/ERG

Client : ZIMPRO Date Tested : 12/13/83

Test No. : HAWAII FORMAT "C" Time : 1156-1319

GAS FLOW DATA

Sample Points 1-8 EAST&SOUTH

Barometric Pressure 29.93 Sample Nozzle Area .000194 ft^2

Duct Pressure 29.91 ''Hg Condensate 53 ml.

Avg. Gas Meter Pressure .4 in.Hg Vol. of Gas Samples 35.27 CF

Avg Gas Meter Temp 78 F Avg Duct Temp 116 F

Wgt. Collected .0289 Gms. Duration of Test 80 Min.

Avg. Velocity at Sampling Pts 43.1 ft/sec.

Calculations

Condensed Water Vapor:

vw = 0.00267 * 53 * (460 + 70)/29.92 = 2.51 SCF

Corrected Meter Volume:

Vo = 35.27 * 30.31 / 29.92 * 530 / 538 = 35.2 SDCF

Percent Water Vapor:

% H2O = 2.51 / 37.71 * 100 = 6.6 %

Particulate Concentration (Grain Loading):

Go = (.0289 Gms. * 15.43)/ 35.2 SDCF = .0127 Grs/SDCF

Particulate Emission Rate:

(.0127 Grs/SDCF * 3717 SDCFM * 60)/7000 = .4 Lbs/Hr.

Percentage of Isokinetic Sampling Attained: %I = 102 %

SECTION II
AIR POLLUTION LOG SHEETS

ULTRACHEM CORPORATION

AIR POLLUTION ANALYSIS

PARTICULATE FIELD DATA FORM

Plant ZIMPRO HOLLOW LEWIS
City
Location Exhaust
Operator Bill + Ron
Date 12-14-83
Run number A
Stack diam, mm (in.) 19.5"

Sample box number
Meter box number 062
Meter ΔH@

Meter calibration (Y)
Pitot tube (C_p) .82
Probe length 36"
Probe liner material
Probe heater setting 259°F
Ambient temperature 80°
Barometric pressure (P_b) 29.93 mm (in.) Hg
Assumed moisture 16.3%
Static pressure (P_s) -.30 mm (in.) H_2O
C Factor
Reference ΔP .65 mm (in.) H_2O

Sheet 1 of 2
Nozzle identification number .000190
Nozzle diameter 5 mm (in.) Pre-test
Thermometer number R
Final leak rate m³/min (cfm) LEAK
Vacuum during leak check .002
16" mm (in.) Hg
Filter number 0037 EPA # 18
Remarks SS TANK # 10
MAG Box # RED 0-.5 + 0-3" H_2O
(i) Pump 10" Oil Dampener 0-23" Hg

Traverse point number	Sampling time, (θ), min	Clock time, (24 h)	(5) Meter Vacuum, mm (in.) Hg	(6) Stack temperature (T_s), °C(°F)	Velocity head (ΔP) mm (in.) H_2O		Pressure differential across orifice meter (ΔH), mm (in.) H_2O		Gas sample volume (V_m), m³ (ft³)	(4) Gas sample temperature at dry gas meter Inlet, °C(°F)	Outlet, °C(°F)	Temperature of gas leaving condenser or last impinger °C (°F)	Pump Hg	i=259 Filter temp. °C(°F)
8 E	0	0832	.4	118	.64	44.5	.43	.60	431.30	73	73	56	10"	259
7	5	37	.4	119	.62	45.2	.44	.62	434.3	77	73	56	10	261
6	10	42	.4	119	.62	45.2	.44	.62	436.0	79	73	54	10	253
5	15	47	.4	119	.62	45.2	.44	.62	438.1	80	73	54	10	261
4	20	52	.4	119	.66	46.6	.45	.68	440.5	82	73	54	10	259
3	25	57	.4	119	.66	46.6	.45	.67	442.7	82	73	54	10	254
2	30	0902	.4	119	.64	45.9	.45	.65	444.9	82	73	54	10	255
1	35	07	.4	117	.48	38.8	.38	.47	446.7	83	73	54	10	255
STOP	40	12							449.15					
	Total		Max	Avg					Total	Avg	Avg	Max		

Quality Assurance Handbook M5-4.2

BH, RY

3.4.12-13

ULTRACHEM CORPORATION

AIR POLLUTION ANALYSIS

PARTICULATE FIELD DATA FORM

Plant Zimpro Honolulu
City
Location Exhaust
Operator BH+RY
Date 12-14-83
Run number A (and B)
Stack diam, mm (in.)
Sample box number
Meter box number
Meter ΔH@

Meter calibration (Y)
Pitot tube (C_p) .82
Probe length 34"
Probe liner material
Probe heater setting (i) 259
Ambient temperature 80°F
Barometric pressure (P_b) 29.93 mm (in.) Hg
Assumed moisture 6.3%
Static pressure (P_s) -.3 mm (in.) H_2O
C Factor
Reference ΔP .65 mm (in.) H_2O

Sheet 2 of 2
Nozzle identification number V .500196
Nozzle diameter .5 mm (in.)
Thermometer number R
Final leak rate <.001 m^3/min (cfm) Post test
Vacuum during leak check <.002 ft³/min LEAK ✓
16" mm (in.) Hg
Filter number 37 + EPA #18
Remarks 55 Tank #16
Red Mag 0-.5, 0-3" H2O
Condensate 43+8 Old Gauge Dirty

Traverse point number	Sampling time, (θ), min	Clock time, (24 h)	(5) Meter Vacuum, mm (in.) Hg	(6) Stack temperature (T_s), °C(°F)	Velocity head (ΔP_s), ΔP mm (in.) H_2O	VEL mm (in.) H_2O	Pressure differential across orifice meter (ΔH), CFM mm (in.)	ORIF mm (in.) H_2O	Gas sample volume (V_m), m^3 (ft^3)	(4) Gas sample temperature at dry gas meter Inlet, °C(°F)	Outlet, °C(°F)	Temperature of gas leaving condenser or last impinger, °C (°F)	PUMP "Hg	Filter temp, °C(°F)
85	0	0914	.4	115	.63	45.4	.45	.65	449.15	84	74	54	9"	250
7	5	19	.4	117	.68	47.2	.47	.69	451.5	87	75	54	9"	247
6	10	24	.4	115	.63	45.4	.45	.64	453.8	83	75	54	9"	245
5	15	29	.4	115	.62	45.0	.48	.68	456.2	83	75	56	9"	255
4	20	34	.4	117	.45	38.4	.37	.46	458.6	84	76	56	8"	255
3	25	39	.4	117	.54	42.1	.41	.59	460.2	84	74	56	9"	274
2	30	44	.4	117	.44	37.9	.37	.45	462.6	85	77	58	8"	278
1	35	49	.4	117	.15	22.4	.31	.15	464.6	85	77	58	8"	271
STOP	40	0954							466.19	Stand				
									34.89		78			
	Total		Max	Avg					Total	Avg	Avg	Max		

Quality Assurance Handbook M5-4.2

BH+RY

3.4.12-13

ULTRACHEM CORPORATION

AIR POLLUTION ANALYSIS

PARTICULATE FIELD DATA FORM

Plant
City
Location Exhaust
Operator BSH + RY
Date 12-14-83
Run number 15B
Stack diam, mm (in.) 17.5
Sample box number
Meter box number 067
Meter ΔH@

Meter calibration (Y)
Pitot tube (C_p) .82
Probe length 36"
Probe liner material
Probe heater setting
Ambient temperature 77
Barometric pressure (P_b) 29.93 mm (in.) Hg
Assumed moisture
Static pressure (P_s) -.36 mm (in.) H_2O
C Factor
Reference ΔP mm (in.) H_2O

Sheet 1 of 2
Nozzle identification number L .000335
Nozzle diameter 6 mm (in.)
Thermometer number 8
Final leak rate m³/min (cfm) 0/min Prelest
Vacuum during leak check 15" mm (in.) Hg
Filter number + EPA #1
Remarks RED MAG Gx 0-.5 ±0.3 H_2O
3 TANK-H 2
Oil Gauge 0-23" H_2O

Traverse point number	Sampling time, (θ), min	Clock time, (24 h)	(5) Vacuum, mm (in.) Hg	(6) Stack temperature (T_s), °C(°F)	Velocity head (ΔP_s), mm (in.) H_2O	Pressure differential across orifice meter (ΔH), mm (in.) H_2O	Gas sample volume (V_m), m³ (ft³)	(4) Gas sample temperature at dry gas meter: Inlet, °C(°F)	Outlet, °C(°F)	Temperature of gas leaving condenser or last impinger, °C (°F)	Filter temp, °C(°F)
8	0 0	1021	.7	115	.64 / 45.8	.79 / 2.00	467.20	77	74	56 / 15"	252
7	4	25	.9	115	.64 / 45.8	.78 / 2.00	470.2	83	73	56 / 23"	267
6	8	29	1.0	117	.66 / 46.5	.80 / 2.07	473.3	87	73	56 / 23"	248
5	12	33	1.0	116	.61 / 44.6	.77 / 1.91	476.3	92	73	56 / 23	247
4	16	37	1.0	118	.61 / 44.6	.77 / 1.91	479.4	95	73	56 / 23	265
3	20	41	1.0	114	.48 / 39.7	.68 / 1.56	482.4	92	73	56 / 17	269
2	24	45	.9	114	.40 / 36.1	.62 / 1.26	485.2	94	73	56 / 15	299
1	28	49	.4	112	.17 / 22.5	.41 / .55	487.9	93	73	56 / 11	292
STOP	40 32	1053					489.74				
	Total		Max	Avg			Total	Avg	Avg	Max	

Quality Assurance Handbook M5-4.2

3.4.12-13

ULTRACHEM CORPORATION

AIR POLLUTION ANALYSIS

PARTICULATE FIELD DATA FORM

Plant
City
Location
Operator Harley
Date
Run number 3" cont
Stack diam, mm (in.) 17.5

Sample box number
Meter box number 062
Meter ΔH@

Meter calibration (Y)
Pitot tube (C_p) .82
Probe length 36"
Probe liner material
Probe heater setting
Ambient temperature 77°
Barometric pressure (P_b) 29.93 mm (in.) Hg
Assumed moisture 6.3%
Static pressure (P_s) mm (in.) H_2O
C Factor
Reference ΔP mm (in.) H_2O

Sheet 2 of 2
Nozzle identification number
Nozzle diameter mm (in.)
Thermometer number
Final leak rate .001 m^3/min (cfm)
Vacuum during leak check 25" mm (in.) Hg
Filter number 97 + EPA #1
Remarks Rad (in) 6.5 0-3" H_2O 0.12 0.23" Rec Dryer

POST 54 + 11 grams

Traverse point number	Sampling time, (θ), min	Clock time, (24 h)	Meter Vacuum, mm (in.) Hg	(5) Stack temperature (T), °C(°F)	(6) Velocity head (ΔP_s) mm (in.)	(PTS) ORIF H_2O	Pressure differential across orifice meter (ΔH), mm (in.)	ORIF H_2O	Gas sample volume (V_m), m^3 (ft^3)	(4) Gas sample temperature at dry gas meter Inlet, °C(°F)	Outlet, °C(°F)	Temperature of gas leaving condenser or last impinger, °C (°F)		Filter temp, °C(°F)
8E	0	1100	1.0	114	.52	41.1	.72	1.67	489.74	88	73	56	19"	240
7	4	04	1.0	114	.52	41.1	.70	1.62	492.6	85	73	54	19"	206
6	8	8	1.0	113	.52	41.1	.70	1.63	495.4	89	73	54	19"	244
5	12	12	1.0	112	.52	41.1	.71	1.66	498.3	93	73	54	19"	248
4	16	16	1.0	112	.60	44.2	.76	1.89	501.8	93	73	54	21	258
3	20	20	1.0	113	.60	44.2	.76	1.89	504.1	95	74	54	22	265
2	24	24	1.0	113	.59	43.8	.75	1.87	507.1	97	74	54	22	270
1	28	28	1.0	112	.40	34.0	.67	1.27	510.2	97	74	54	16	296
STOP	32	32							513.44	Final				
									46.24		82			
			.9											
	Total		Max	Avg					Total	Avg	Avg	Max		

3.4.12-13

ULTRACHEM CORPORATION

C

AIR POLLUTION ANALYSIS

PARTICULATE FIELD DATA FORM

Plant Zimpro Honolulu
City
Location Exhaust
Operator Port Ru
Date 12-13-83
Run number "C"
Stack diam, mm (in.) 17.5

Sample box number
Meter box number
Meter ΔH@

Meter calibration (Y)
Pitot tube (C_p) .82
Probe length 36"
Probe liner material
Probe heater setting
Ambient temperature 77°F
Barometric pressure (P_b) 29.93 mm (in.) Hg
Assumed moisture 6.6%
Static pressure (P_s) -.3 mm (in.) H_2O
C Factor
Reference ΔP mm (in.) H_2O

Sheet 1 of 2
Nozzle identification number Q .000194
Nozzle diameter 5 mm (in.)
Thermometer number
Final leak rate m^3/min (cfm)
Vacuum during leak check 1.804 cfm - rotest
15" mm (in.) Hg
Filter number 35 + EPA 5
Remarks JANI # X
Red Mag 0-5 0-3" H_2O
Dobson Oil gauge 0-23"

Traverse point number	Sampling time, (θ), min	Clock time, (24 h)	(5) meter ~~Vacuum, mm~~ (in.) Hg	(6) Stack temperature (T), °C(°F)	Velocity head (ΔP), ΔP mm √ΔP (in.) H_2O	Pressure differential across orifice meter (ΔH), CFM mm ORIF (in.) H_2O	Gas sample volume (V_m), m^3 (ft^3)	(4) Gas sample temperature at dry gas meter Inlet, °C(°F)	Outlet, °C(°F)	Temperature of gas leaving condenser or last impinger, °C (°F)		Filter temp, °C(°F)
8E	0	1156	.4	118	.60 44.8	.44 .63	514.00	76	73	62	10"	261
7	5	01	.4	116	.60 44.3	.44 .63	516.20	82	73	60	9"	245
6	10	06	.4	119	.60 44.4	.44 .63	518.7	83	73	56	9"	246
5	15	11	.4	119	.62 45.1	.45 .65	520.9	83	73	56	9"	248
4	20	16	.4	119	.64 45.8	.458 .68	523.1	83	73	56	9"	265
3	25	21	.4	119	.72 48.7	.48 .76	525.3	83	73	56	9"	260
2	30	26	.4	118	.62 45.1	.45 .66	527.8	83	73	56	10"	286
1	35	31	.4	118	.46 38.7	.38 .48	530.1	79	73	56	8"	261
STOP	40	36					532.1					
							~~35.24~~					
	Total		Max	Avg			Total	Avg	Avg	Max		

ULTRACHEM CORPORATION

C

AIR POLLUTION ANALYSIS

PARTICULATE FIELD DATA FORM

Zimpro

Plant: Honolulu
City:
Location: Exhaust
Operator: [illegible]
Date: 12-13-83
Run number: C cont.
Stack diam, mm (in.): 17.5

Sample box number:
Meter box number:
Meter ΔH@:

Meter calibration (Y):
Pitot tube (C_p): .82
Probe length: 36"
Probe liner material:
Probe heater setting:
Ambient temperature: 77
Barometric pressure (P_b): 29.93 mm (in.) Hg
Assumed moisture: 6.0%
Static pressure (P_s): -.3 mm (in.) H_2O
C Factor:
Reference ΔP: mm (in.) H_2O

Sheet 2 of 2
Nozzle identification number: D
Nozzle diameter: .5 mm (in.)
Thermometer number: R
Final leak rate: .008 m^3/min (cfm)
Vacuum during leak check: 13" mm (in.) Hg
Filter number: 38 + E28.5
Remarks: TANK #8
Redman 0-.5 + 0-3" H_2O
Dwyer 0-23" H_2O

Post-test Condensate 44+9

Traverse point number	Sampling time, (θ), min	Clock time, (24 h)	(5) Meter Vacuum, mm (in.) Hg	(6) Stack temperature (T_s), °C(°F)	Velocity head (ΔP_s), mm (in.) H_2O		Pressure differential across orifice meter (ΔH), mm (in.) H_2O		Gas sample volume (V_m), m^3 (ft^3)	(4) Gas sample temperature at dry gas meter: Inlet, °C(°F)	Outlet, °C(°F)	Temperature of gas leaving condenser or last impinger °C (°F)		Filter temp, °C(°F)
8	0	1239	.4	115	.64	45.8	.46	.68	532.1	81	73	58	9"	247
7	5	44	.4	116	.70	47.8	.48	.74	534.3	78	73	58	10"	244
6	10	49	.4	114	.61	44.6	.45	.64	536.7	88	75	60	10"	243
5	15	54	.4	115	.54	41.9	.47	.57	538.9	85	75	60	10"	251
4	20	59	.4	113	.57	41.1	.41	.56	541.4	86	74	58	10	254
3	25	1304	.4	114	.49	39.5	.40	.51	543.5	86	76	58	9"	293
2	30	09	.4	113	.42	36.9	.38	.45	545.5	87	77	60	8"	296
1	35	14	.4	114	.34	33.2	.34	.37	547.4	87	77	60	8"	298
STOP	40	19							549.27					
									35.27					
	Total		Max	Avg					Total	Avg	Avg	Max		

Quality Assurance Handbook M5-4.2

3.4.12-13

ULTRAMUTLIN CORPORATION

AIR POLLUTION ANALYSIS
VISIBLE EMISSIONS EVALUATION

Client Zimpro

Location ~~Honolulu~~, Honolulu

Type Facility Sewage Treatment Plant

Emission Point Exhaust Stack

Control Device Venturi Scrubber

Test Date 12-13-83

Test No. A, B + C

Observer RRU

Recertification Date Aug. 83

Certifying Agency Calif. ARB

FIELD DATA

Test #	A	B	C		
Observer Location:	Refer to map				
Position on map					
Distance to discharge	30'	30'	30'		
Direction from discharge	SE	SE	S		
Direction from sun	N	N	NNE		
Height of discharge, a.g.l.	120'	120'	120'		
Height of observation point, a.g.l.	110'	110'	110'		
Weather Conditions:					
Wind direction	E	E	ENE		
Wind speed, m.p.h.	0-10	0-10	0-10		
Ambient temp., °F	70	71	72		
Precipitation	trace	trace	trace		
Cloud cover	overcast	overcast	overcast		
Plume Description:					
Color	NONE	NONE	NONE		
Distance Visible	0	0	0		
Steam plume type	N/A	N/A	N/A		
Distance to steam formation	N/A	N/A	N/A		
Distance to steam dissipation	N/A	N/A	N/A		
Illumination	poor	poor	poor		
Background	gray sky	gray sky	gray sky		

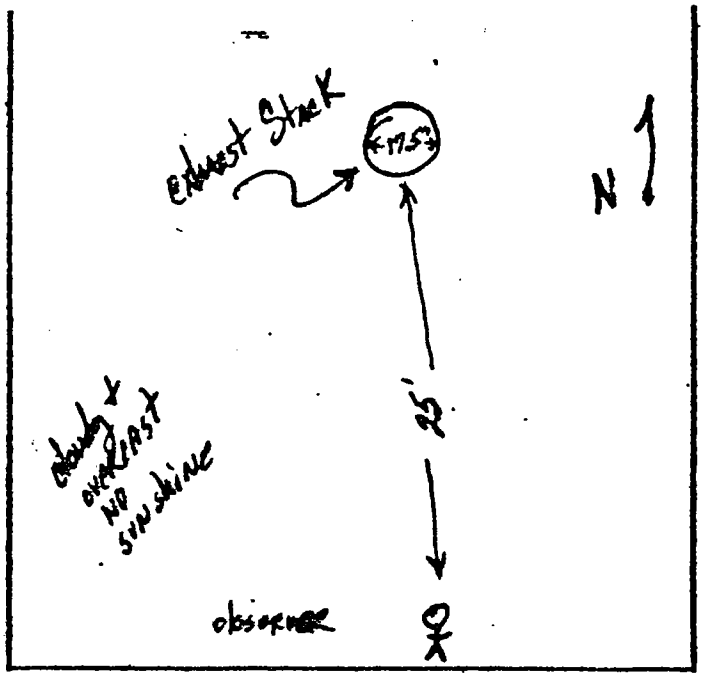

ULTRACHEM CORPORATION / ERG
AIR POLLUTION ANALYSIS
VISIBLE EMISSIONS
FIELD DATA SHEET (p. 2)

Date: Dec 13, 1983

Client: Zimpro

Location: Hawaii

Emission pt.: Stack Exhaust

Observer: RRU

Test No.: A- chem. treated sludge

OPACITY READINGS

Set	Hr.	Min.	Seconds 0	15	30	45	Viewing Conditions	Range	Avg.
#1	0840	0	0	0	0	0	viewing conditions "poor"		
		1	0	0	0	0	sky is cloudy and overcast	0-5	.2
		2	0	0	0	0	gray background		
		3	5	0	0	0			
		4	0	0	0	0			
		5	0	0	0	0	Stack height above roof		
		6	0	0	0	0	equals =		
		7	0	0	0	5			
		8	0	0	0	0	wind 0-10 mph EAST		
		9	0	0	0	0		0-5	.2
		10	0	0	0	0			
		11	0	0	0	0			
		12	0	0	0	0			
		13	0	0	0	0			
		14	0	0	0	0			
		15	0	0	0	0		-0-	0
		16	0	0	0	0			
		17	0	0	0	0			
		18	5	0	0	0			
		19	0	0	0	0			
		20	0	5	0	0			
		21	0	0	0	0		0-5	.1
		22	0	0	0	0			
		23	0	0	0	0			
		24	0	0	0	0			
		25	0	0	0	0			
		26	0	0	0	0			
		27	0	0	0	0		0	0
		28	0	0	0	0			
		29	0	0	0	0			

SEE TEST "A"

ULTRACHEM CORPORATION
AIR POLLUTION ANALYSIS
VISIBLE EMISSIONS
FIELD DATA SHEET (p. 2)

Date Dec 13, 1983

Client Zimpro

Location Hawaii

Emission pt. Exhaust Stack

Observer RRU

Test No. B chem treated sludge

OPACITY READINGS

ORSAT 10.1% O_2 8.1% CO_2

Set.	Hr.	Min.	Seconds 0	15	30	45	Viewing Conditions	Range	Avg.
	1050	0	0	0	0	0	overcast gray sky		
		1	0	0	0	0			
		2	0	0	0	0	viewing conditions "poor"	0	0
		3	0	0	0	0			
		4	0	0	0	0			
		5	0	0	0	0			
		6	0	0	0	0			
		7	0	0	0	0			
		8	0	0	0	0		0	0
		9	0	0	0	0			
		10	0	0	0	0			
		11	0	0	0	0			
		12	0	0	0	0			
		13	0	0	0	0			
		14	0	0	0	0			
		15	0	0	0	0		0	0
		16	0	0	0	0			
		17	0	0	0	0			
		18	0	0	0	0			
		19	0	0	0	0			
		20	0	0	0	0			
		21	0	0	0	0		0	0
		22	0	0	0	0			
		23	0	0	0	0			
		24	0	0	0	0			
		25	0	0	0	0			
		26	0	0	0	0			
		27	0	0	0	0		0	0
		28	0	0	0	0			
		29	0	0	0	0			

SEE TEST A

ULTRACHEM CORPORATION
AIR POLLUTION ANALYSIS
VISIBLE EMISSIONS
FIELD DATA SHEET (p. 2)

Date Dec. 13, 1983

Client Zimpro

Location Howard

Emission pt. Exhaust Stack

Observer [illegible]

Test No. C chem treated sludge

OPACITY READINGS

Set	Hr.	Min.	Seconds 0	15	30	45	Viewing Conditions	Range	Av
	1205	0	0	0	0	0	OVER CAST		
		1	0	0	0	0	scattered showers	0-5	
		2	0	0	5	0	gray sky		
		3	0	0	0	0			
		4	0	5	0	0	Viewing conditions "poor"		
		5	0	0	0	0			
		6	0	0	0	0			
		7	0	0	0	5			
		8	0	0	0	0		0-5	
		9	0	0	0	0			
		10	0	0	5	0			
		11	0	0	0	0			
		12	0	0	0	5			
		13	5	0	0	0		0-5	
		14	0	0	0	0			
		15	0	0	0	0			
		16	0	0	0	0			
		17	0	0	0	0			
		18	0	0	0	0			
		19							
		20							
		21							
		22							
		23							
		24							
		25							
		26							
		27							
		28							
		29							

SECTION III
SCHEMATIC OF SAMPLING EQUIPMENT

Schematic of Stack Sampling Equipment

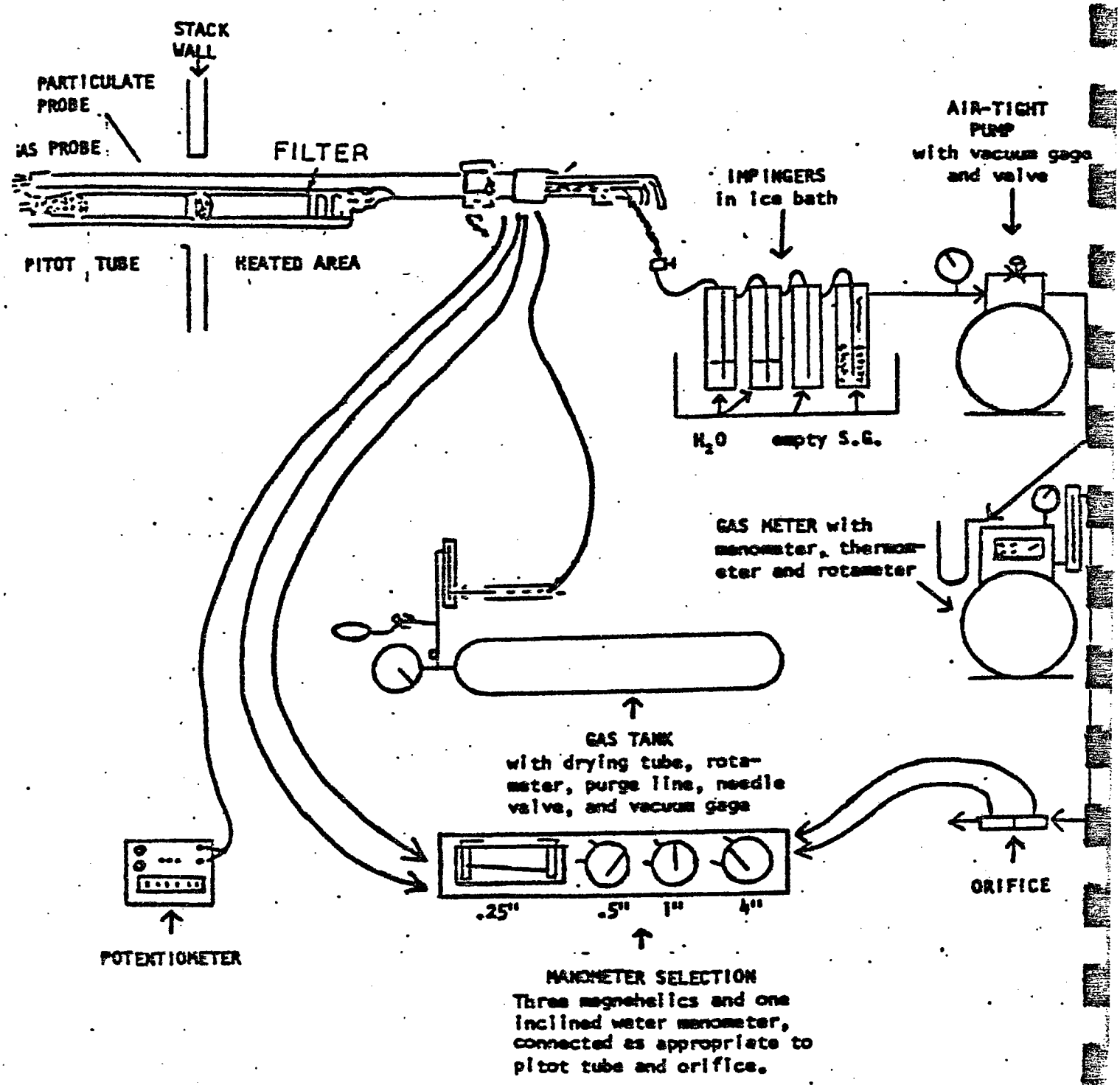

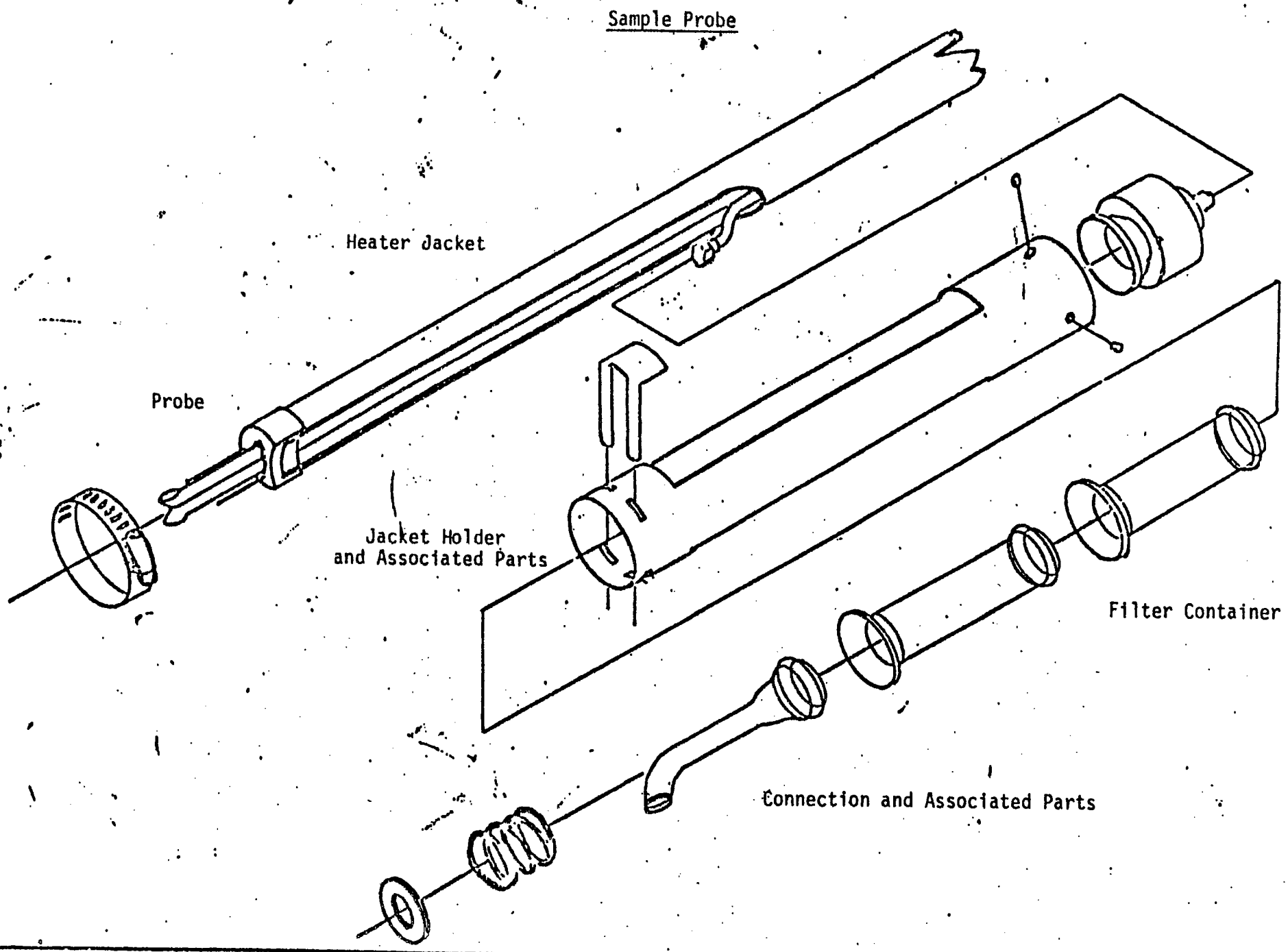

PROBEHOLDER ASSEMBLY

SECTION IV
EQUATIONS FOR CALCULATIONS

EQUATIONS FOR CALCULATIONS

1) Average Stack Gas Velocity (See Gas Flow Rate Data Sheet)

$$V_s, \text{ Ft/Sec} = C_p \times \left[h \times (T_s + 460)\right]^{1/2} \times \left[\frac{1}{M.W. \times P_s}\right]^{1/2} \times 85.49$$

where h = velocity head of stack gas, inches H_2O

where T_s = stack gas temperature, °R

where 85.49 is a constant with units of $\frac{ft}{sec.} \quad \frac{(lb/lb\text{-}mole)\ (in.\ Hg)}{(°R)\ (in.\ H_2O)}^{1/2}$

where C_p is the dimensionless correction factor for pitot tube obtained by calibration against a standard pitot tube.

where P_s is the absolute stack pressure in inches Hg.

where M.W. is the stack gas molecular weight and is calculated by the equation.

$$M.W. = 0.44\ (\%\ CO_2)\ \left(1-\frac{\%H_2O}{100}\right) + 0.32\ (\%O_2)\ \left(1-\frac{\%H_2O}{100}\right) + 0.2815\ (\%N_2)\ \left(1-\frac{\%H_2O}{100}\right) + 0.18\ (\%H_2O)$$

0.44 x 100 is the molecular weight of carbon dioxide.
0.32 x 100 is the molecular weight of oxygen.
0.2815 x 100 is the molecular weight of nitrogen plus the argon contribution to air.
0.18 x 100 is the molecular weight of water.

2) Stack Volumetric Flow Rate (See Gas Flow Rate Data Sheet).

CFM (Stack) = Duct Area x 60 x V_s (ave).

$$\text{SDCFM (Stack)} = \text{CFM (Stack)} \times \frac{530}{T_s\ (ave)} \times \frac{P_s}{29.92} \times \left(1 - \frac{\%H_2O}{100}\right)$$

where T_s (ave) = Average stack temperature °R.

P_s = Stack Pressure, inches Hg.

where Duct area is in ft^2.

where 60 converts seconds to minutes.

3) Percent water vapor and Corrected Meter Volume

$$\%H_2O\ (vol) = \frac{Vw}{Vw + Vo} \times 100$$

where $Vw = 0.00267 \times ml\ condensate \times \frac{460 + 70}{29.92}$

where 0.00267 is a constant with units of $\frac{in.Hg - ft^2}{ml - {}^\circ R}$

and Vo = Corrected Meter Volume in cubic feet

$$Vo = Sampled\ Volume\ (CF) \times \frac{Pb + Pm}{29.92} \times \frac{530}{460 + Tm}$$

Pb = Barometric Pressure, in. Hg.
Pm = Average Meter Pressure, in. Hg.
Tm = Average Meter Temperature, °F
528 °R is standard temperature condition
29.92 in. Hg is standard pressure condition
460°R equals 0°F.

4) Percentage of Isokinetic Sampling Attained:

$$\%I = \frac{100}{60} \times \frac{460 + TS}{} \times \left[\frac{0.00267 \times condensate\ ml + \frac{(spl.vol)\ CF \times (Pm + Pb)}{460 + Tm}}{time\ (min) \times Vs\ (avg.)\ ft/sec \times Pb \times An\ ft^2}\right] =$$

Ts = Average stack temperature, °F
Ps = Stack pressure, in. Hg.
An = Nozzle area, ft^2
Time = Total sampling time, min.
Vs (ave) = Average stack gas velocity at sampled points (see equation #1)
Pb = Barometric pressure, in. Hg.

5) Particulate Concentration (Grain Loading)

$$Go = \frac{Grams\ particulate}{Vo} \times 15.43$$

where Vo = corrected meter volume, SDCF

and 15.43 is a constant which converts $\frac{grams}{ft^3}$ to $\frac{grains}{ft^3}$

6) Particulate Emission Rate, lb/hr

$$E = Go \times SDCFM\ (stack) \times \frac{60}{7000}$$

where 60 converts minutes to hours

and 7000 converts grains to pounds

7) Particulate Emission Rate, pounds per 1000 pounds of flue gas

(Wet Basis) $$\#/1000\#\text{flue gas} = \frac{1000 \times E\ (\#/hr)}{SCFM \times 60 \times \text{wet gas density}}$$

(Dry Basis) $$\#/1000\#\text{flue gas} = \frac{1000 \times E\ (\#/hr)}{SCFM \times 60 \times \text{dry gas density}}$$

8) Particulate Emission Rate, pounds per 1000 pounds of flue gas corrected to 12% CO_2

$$\#/1000\#\text{flue gas at } 12\%\ CO_2\ (\text{Wet Basis}) = \#/1000\#\text{flue gas (wet basis)} \times \frac{12}{\%CO_2}$$

$$\#/1000\#\text{flue gas at } 12\%\ CO_2\ (\text{Dry Basis}) = \#/1000\#\text{flue gas (dry basis)} \times \frac{12}{\%CO_2}$$

where $\%CO_2$ is the measured CO_2 content in percent at the scrubber fan on a dry basis

9) Flue Gas Density in pounds per cubic foot

$$\text{Wet Gas Density} = \frac{0.0458 \times M.W.\ (wet) \times Ps}{Ts}$$

$$\text{Dry Gas Density} = \frac{0.0458 \times M.W.\ (dry) \times Ps}{Ts}$$

where Ps is the absolute stack pressure in inches of Hg.
and Ts is the stack temperature in °R
and 0.0458 is a constant with units of $\frac{\text{pound-mole-°R}}{\text{grams-in.Hg.-ft}}$

this assumes a density of dry air to be 0.0760 #/CF at 520°R and 29.92 in.Hg.

SECTION V
STACK SCHEMATIC

STACK DIAGRAM

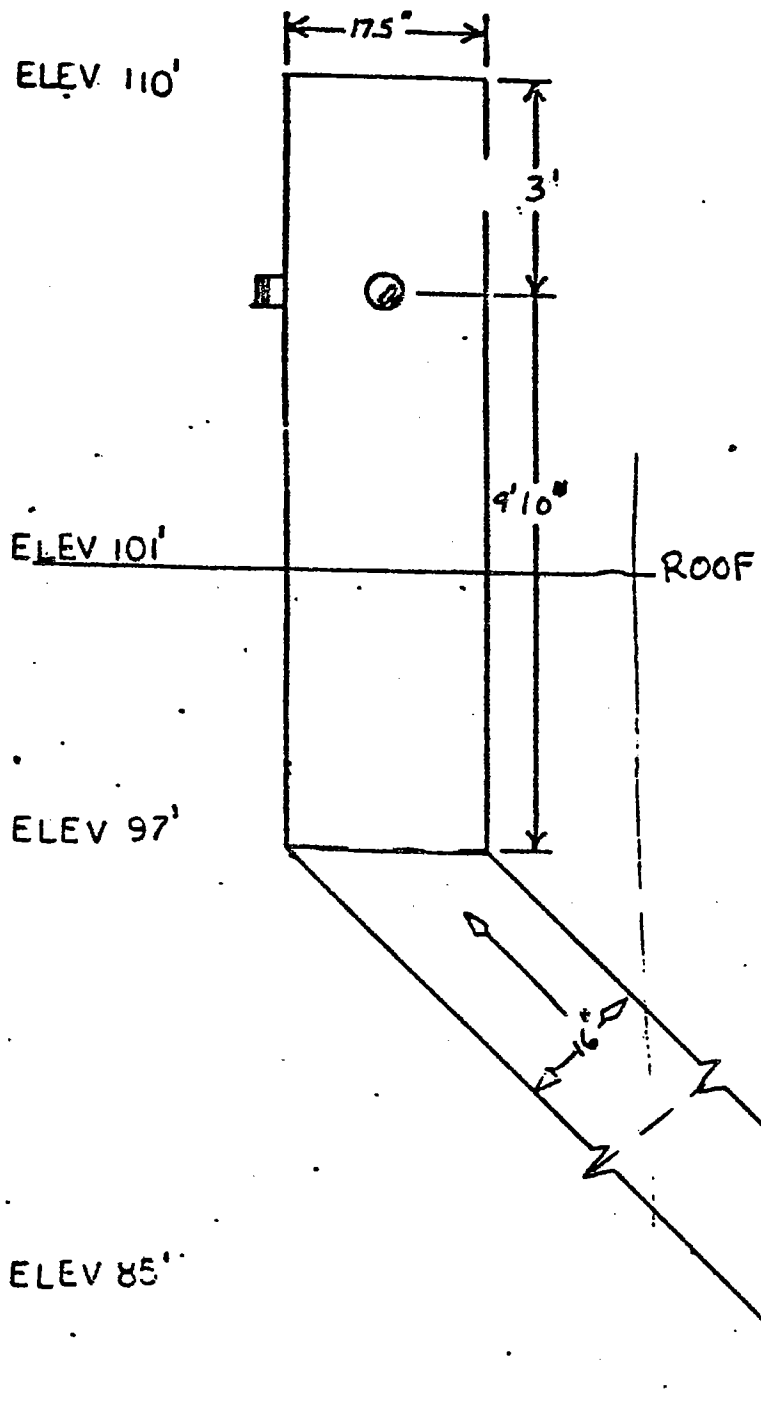

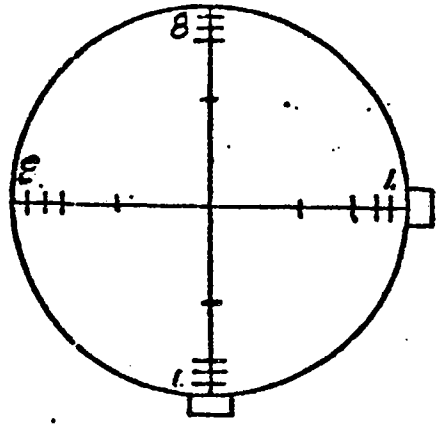

POINT	DISTANCE FROM CENTER
1	8"
2	7.125"
3	5.5
4	3.25
5	3.25
6	5.5
7	7.125
8	8

Section VI
Pre-Test Calibration Data

EPA-600/4-77-027b
August 1977

QUALITY ASSURANCE HANDBOOK FOR AIR POLLUTION MEASUREMENT SYSTEMS

Volume III — Stationary Source Specific Methods

U.S. ENVIRONMENTAL PROTECTION AGENCY
Office of Research and Development
Environmental Monitoring and Support Laboratory
Research Triangle Park, North Carolina 27711

PRETEST SAMPLING CHECKS
(Method 5, Figure 3.1)

Date 10-10-83 Calibrated by Brian Hunt

Meter box number 062 ΔH@ 2.06

Dry Gas Meter*

Pretest calibration factor, Y .998 (within ±2% of the average factor for each calibration run)

Impinger Thermometer

Was a pretest temperature correction used? ____ yes ✓ no
If yes, temperature correction ____ (within ±3°C (5.4°F) over range)

Dry Gas Meter Thermometers

Was a pretest temperature correction made? ____ yes ✓ no
If yes, temperature correction ____ (within ±3°C (5.4°F) over range)

Stack Temperature Sensor*

Was a stack temperature sensor calibrated against a reference thermometer? ✓ yes ____ no
If yes, give temperature range with which the readings agree within ±1.5% of the reference values 540 to 706 °R

Barometer

Was the pretest field barometer reading correct? ✓ yes ____ no
(within ±2.5 mm (0.1 in.) Hg of the mercury-in-glass barometer)

Nozzle*

Was the nozzle calibrated to the nearest 0.025 mm (0.001 in.)?
✓ yes ____ no

*Most significant items/parameters to be checked.

Table 2.1 ACTIVITY MATRIX FOR CALIBRATION OF APPARATUS

Apparatus	Acceptance limits	Frequency and method of measurement	Action if requirements are not met
Type S pitot tube and/or probe assembly	All dimension specifications met, or calibrate according to Sec 3.1.2, and mount in an interference free manner	When purchased, use method in Secs 3.1.1 and 3.1.2; visually inspect after each field test	Do not use pitot tubes that do not meet face opening specifications; repair or replace as required
Stack gas temperature measurement system	Capable of measuring within 1.5% of minimum absolute stack temperature	When purchased and after each field test, calibrate against ASTM 63C or 63F thermometer	Adjust to agree with Hg bulb thermometer, or construct a calibration curve to correct the readings
Barometer	Agrees within 2.5 mm (0.1 in.) Hg of mercury-in-glass barometer	Initially and after every field use, compare to a liquid-in-glass barometer	Adjust, repair, or discard
Differential pressure gauge (does not include inclined manometers)	Agree within ±5% of inclined manometers	Initially and after each field use	Reject test results, or consult administrator if posttest calibration is out of specification

Table 2.1. ACTIVITY MATRIX FOR CALIBRATION OF EQUIPMENT

Apparatus	Acceptance limits	Frequency and method of measurement	Action if requirements are not met
Wet test meter	Capacity $\geq 3.4\ m^3/h$ ($120\ ft^3/h$); accuracy within ±1.0%	Calibrate initially, and then yearly by liquid displacement	Adjust until specifications are met, or return to manufacturer
Dry gas meter	$Y_i = Y \pm 0.02\ Y$	Calibrate vs wet test meter initially, and when posttest check exceeds $Y \pm 0.05\ Y$	Repair, or replace and then recalibrate
Thermometers	Impinger thermometer ±1°C (2°F); dry gas meter thermometer ±3°C (5.4°F) over range; stack temperature sensor ±1.5% of absolute temperature	Calibrate each initially as a separate component against a mercury-in-glass thermometer; then before each field trip compare each as part of the train with the mercury-in-glass thermometer	Adjust; determine a constant correction factor; or reject
Probe heating system	Capable of maintaining 120° ±14°C (248° ± 25°F) at a flow rate of 20ℓ/min ($0.71\ ft^3/min$)	Calibrate component initially by APTD-0576; if constructed by APTD-0581, or use published calibration curves	Repair, or replace and then reverify the calibration
Barometer	±2.5 mm (0.1 in.) Hg of mercury-in-glass barometer	Calibrate initially vs mercury-in-glass barometer; check before and after each field test	Adjust to agree with a certified barometer
Probe nozzle	Average of three ID measurements of nozzle; difference between high and low ≤0.1 mm (0.004 in.)	Use a micrometer to measure to nearest 0.025 mm (0.001 in.)	Recalibrate, reshape, and sharpen when nozzle becomes nicked, dented, or corroded

(continued)

Table 3.1 ACTIVITY MATRIX FOR PRESAMPLING OPERATIONS

Apparatus	Acceptance limits	Frequency and method of measurements	Action if requirements are not met
Probe	1. Probe liner free of contaminants and constructed of borosilicate glass, quartz, or equivalent; metal liner must be approved by by administrator	1. Clean probe internally by brushing with tap water, deionized distilled water, and acetone; air dry before test	1. Repeat cleaning and assembly procedures
	2. Probe leak free at 380 mm (15 in.) Hg	2. Visually check before test	2. Replace
	3. Probe heating system prevents moisture condensation	3. Check heating system initially and when moisture cannot be prevented during testing (Sec 3.4.1)	3. Repair or replace.
Impingers, filter holders, and glass containers	Clean and free of breaks, cracks, leaks, etc.	Clean with detergent, tap water, and deionized distilled water	Repair or discard
Pump	Sampling rate of 0.02-1.03 m^3/min (0.66 to 1.0 ft^3/min) up to 380 mm (15 in.) Hg at pump inlet	Service every 3 mo or upon erratic behavior; check oiler jars every 10 tests	Repair or return to manufacturer
Dry gas meter	Clean and readings within ±2% of average calibration factor	Calibrate according to Sec 3.4.2; check for excess oil	As above
<u>Reagents and Equipment</u>			
Sampling filters	Free of irregularities, flaws, pinhole leaks; desiccate 24 h at 20° ±5.6°C (68° ± 10°F), or oven dry at 105°C (220°F) 2 to 3 h; constant weight ±0.1 mg	Visually check prior to testing; weigh on balance to 0.1 mg prior to field use	Replace

(continued)

Table 3.1 (continued)

Apparatus	Acceptance limits	Frequency and method of measurements	Action if requirements are not met
Water	Deionized distilled conforming to ASTM-D1193-74, Type 3	Run blank evaporations prior to field use to eliminate high solids (only required if impinger contents to be analyzed)	Redistill or replace
Stopcock grease	Acetone insoluble, heat stable silicone grease	Check label data upon receipt	Replace
Sample recovery acetone	Reagent grade, ≤0.001% residue, in glass bottles	Run blank evaporations upon receipt	Replace or return to supplier
Packing Equipment for Shipment			
Probe	Rigid container protected by polyethylene foam	Prior to each shipment	Repack
Impingers, containers, and assorted glassware	Rigid container protected by polyethylene foam	As above	As above
Pump	Sturdy case lined with polyethylene foam material if not part of meter box	As above	As above
Meter box	Meter box case and/or additional material to protect train components; pack spare meter box	As above	As above
Wash bottles and storage containers	Rigid foam-lined container	As above	As above

METER BOX CALIBRATION DATA AND CALCULATION FORM

(English units)

MAG BOX #4

Date 10/10/83 (R6) Meter box number SINGER 062

Barometric pressure, P_b = 30.0 in. Hg Calibrated by BK

Orifice manometer setting (ΔH), in. H_2O	Gas volume: Wet test meter (V_w), ft^3 RA	Gas volume: Dry gas meter (V_d), ft^3 (R1)	Temperatures: Wet test meter (t_w), °F (R5)	Temperatures: Dry gas meter Inlet (t_{d_i}), °F (R2)	Temperatures: Dry gas meter Outlet (t_{d_o}), °F (R6)	Temperatures: Dry gas meter Avg[a] (t_d), °F (R3)	Time (θ), min (R4)	Y_i	$\Delta H@_i$, in. H_2O
(R7) 0.5	180.00 / 185.80 (5)	156.29 / 161.33 5.04	1.1	75	1.0	79	77	12.5	1.003	1.75
1.0	186.00 / 191.00 (5)	162.34 / 167.40 5.06	2.0	75	1.8	75	75	9.25	.994	1.93
1.5	192.00 / 202.00 10 (10)	168.40 / 178.55 10.15	2.8	75	2.4	75	75	15.75	.997	2.10
2.0	204.00 / 214.00 10 (12)	180.60 / 192.79 12.19	3.7	75	3.2	75	75	16.80	.999	2.22
3.0	10							$\bar{X}$	~~.994~~	2.00
4.0	10								.998	
								Avg		

ΔH, in. H_2O	$\frac{\Delta H}{13.6}$ (R8)	$Y_i = \frac{V_w P_b (t_d + 460)}{V_d (P_b + \frac{\Delta H}{13.6})(t_w + 460)}$	$\Delta H@_i = \frac{0.0317\ \Delta H}{P_b (t_d + 460)} \left[\frac{(t_w + 460)\ \theta}{V_w}\right]^2$
0.5	0.0368		
1.0	0.0737		
1.5	0.110		
2.0	0.147		
3.0	0.221		
4.0	0.294		

[a] If there is only one thermometer on the dry gas meter, record the temperature under t_d.

METER BOX CALIBRATION DATA AND CALCULATION FORM

(English units)

Red Mag Box

Date 10-4-83 Meter box number Sprague 293

Barometric pressure, P_b = 30.02 in. Hg Calibrated by BJ ICD

Orifice manometer setting (ΔH), in. H_2O	Gas volume: Wet test meter (V_w), ft^3	Gas volume: Dry gas meter (V_d), ft^3	Temperatures: Wet test meter (t_w), °F	Temperatures: Dry gas meter: Inlet (t_{d_i}), °F	Temperatures: Dry gas meter: Outlet (t_{d_o}), °F	Temperatures: Dry gas meter: Avg[a] (t_d), °F	Time (θ), min	Y_i	$\Delta H@_i$ in. H_2O
0.5	326.00 / 5 / 331.00	914.98 / 910.00 4.98	75	75	76	76	12.76	1.004	1.84
1.0	332.50 / 5 / 337.50	921.11 / 926.14 5.03	76	76	76	76	9.14	0.991	1.89
1.5	338.00 / 10 / 348.00	926.46 / 936.24 10.08	77	77	77	77	15.14	0.992	1.95
2.0	349.00 / 10 / 359.00	937.78 / 947.90 10.12	78	77	77	77	13.20	0.993	2.00
3.0	10								
4.0	10								
							Avg	.995	1.92

ΔH, in. H_2O	$\frac{\Delta H}{13.6}$	$Y_i = \frac{V_w P_b (t_d + 460)}{V_d (P_b + \frac{\Delta H}{13.6}) (t_w + 460)}$	$\Delta H@_i = \frac{0.0317 \Delta H}{P_b (t_d + 460)} \left[\frac{(t_w + 460)\theta}{V_w}\right]^2$
0.5	0.0368		
1.0	0.0737		
1.5	0.110		
2.0	0.147		
3.0	0.221		
4.0	0.294		

[a] If there is only one thermometer on the dry gas meter, record the temperature under t_d.

ULTRACHEM CORPORATION

PITOT TUBE ID 3' BA-A

DATE 9/27/83

C_{pstd} .99

P_{BAR} 30.02

OIL GAUGE X

C_p: 0.- .5 .80 .5 - 1.0 .82 Ave .81

MAG GAUGE

Amp	STD OIL Δp	STD MAG Δp	PITOT OIL Δp	STD Δp Ave	PITOT Δp Ave	C_p
1.9	.70		1.03	.72	1.02	.83
1.8	.57		.86	.57	.87	.80
1.4	.11		.18	.11	.18	.77
1.2	.09		.13	.09	.13	.82
1.9	.72		1.02			
1.8	.57		.88			
1.4	.11		.18			
1.2	.09		.14			
1.9	.74		1.02			
1.8	.56		.87			
1.4	.12		.18			
1.2	.09		.13			

by: [illegible]

Remarks :

$$C_p = C_{pstd}\sqrt{\frac{\Delta p_{std}}{\Delta p}}$$

Date 9-22-83 Potentiometer I.D. 3' BA-A

Ambient temperature 77°F Barometric pressure 30.05 in. Hg

Calibrator BJ Reference: Mercury-in-glass ASTM

Other

Reference Point Number [a]	Source b (specify)	Reference thermometer temperature, °F	Thermocouple potentiometer termperature, °F	Temperature difference, [c] %
ASTM	3'BA-A	246	246	0.0%
		256	257	0.14%
		80	79	0.19%
				avg 0.11%

[a] Every 30°C (50°F) for each reference point.

[b] Type of calibration system used

[c] $\frac{(\text{ref temp, }^{\circ}F + 460) - (\text{test thermom temp, }^{\circ}F + 460)}{\text{ref temp, }^{\circ}F + 460}$ <100 1.5%

DIFFERENTIAL PRESSURE GAUGE CALIBRATION DATA FORM

Gauge type Magnehelic Serial or ID number "Red" Mag Box

Scale 0-.5" and 0-2.0" in series

0-5" 0.1 Gauge-oil manometer Δp	Differential pressure gauge Δp		Pressure difference %
	0-.5"	0-2.0"	
0.20"	0.20"	0.20"	-0-
0.40"	0.40"	0.40"	-0-
0.50"	0.50"	0.50"	-0-
0.80"		0.80"	-0-
1.00"		1.00"	-0-
1.50"		1.50"	-0-
2.00"		2.00"	-0-

Calibration: ✓ initial _____ posttest

Date calibrated 10/4/83 by ED

NOZZLE CALIBRATION DATA FORM

Date 5/23/83 Calibrated by ED

Nozzle identification number	Nozzle Diameter[a] D_1, mm (in.)	D_2, mm (in.)	D_3, mm (in.)	ΔD,[b] mm (in.)	D_{avg}[c]
6mm E	.233	.234	.234	.001	.000298
6mm F	.233	.233	.233	.000	.000296
6mm G	.236	.237	.236	.001	.000305
6mm C	.231	.231	.231	.000	.000291
6mm I	.231	.232	.231	.001	.000292
6mm D	.232	.233	.232	.001	.000294
6mm L	.234	.234	.233	.001	.000298

where:

[a] $D_{1,2,3}$ = three different nozzles diameters, mm (in.); each diameter must be within (0.025 mm) 0.001 in.

[b] ΔD = maximum difference between any two diameters, mm (in.), $\Delta D \leq$ (0.10 mm) 0.004 in.

[c] D_{avg} = average of D_1, D_2, and D_3.

NOZZLE CALIBRATION DATA FORM

Date 5/23/83 Calibrated by ED

Nozzle identification number	Nozzle Diameter[a] D_1, mm (in.)	D_2, mm (in.)	D_3, mm (in.)	ΔD,[b] mm (in.)	D_{avg}[c]
5mm Q	.188	.189	.189	.001	.000194 ft²
5mm Y	.186	.187	.187	.001	.000190 f²
5mm L	.192	.194	.190	.002	.000201
5mm Z	.196	.195	.193	.003	.000207

where:

[a] $D_{1,2,3}$ = three different nozzles diameters, mm (in.); each diameter must be within (0.025 mm) 0.001 in.

[b] ΔD = maximum difference between any two diameters, mm (in.), $\Delta D \leq$ (0.10 mm) 0.004 in.

[c] D_{avg} = average of D_1, D_2, and D_3.

$$\frac{\pi \cdot r^2}{144} = \text{Area of a circle}$$

Quality Assurance Handbook M5-2.6

3.4.12-11

Section VII
Post-Test Calibration Date

POSTTEST CALIBRATION CHECKS
(Method 5, Figure 5.1)

Plant Zimpro Inc. Calibrated by Bill Johnston

Meter box number 062 Date 12-27-83

Dry Gas Meter

Pretest calibration factor, Y ~~[illegible]~~ 0.998 (within ±2%)
Posttest check, Y* 1.00 (within 15% of pretest)
Recalibration required? _____ yes ✓ no
If yes, recalibration factor, Y _____ (within ±2%)
Lower calibration factor, Y _____ for calculations (pretest or posttest)

Dry Gas Meter Thermometers

Was a pretest temperature correction used? _____ yes ✓ no
If yes, temperature correction _____ (within ±3°C (5.4°F) over range)
Posttest comparison with mercury-in-glass thermometer?* (within ±6°C (10.8°F) at ambient temperature)
Recalibration required? _____ yes ✓ no
Recalibration temperature correction? ___0___ (within ±3°C (5.4°F) over range)*
If yes, no correction necessary for calculations if meter thermometer temperature is higher; if calibration temperature is higher, add correction to average meter temperature for calculations

Stack Temperature Sensor

Was a pretest temperature correction used? _____ yes ✓ no
If yes, temperature correction _____ °C (°F) (within ±1.5% of readings in K (°R) over range)
Average stack temperature of compliance test, T_s 575 K (°R)
Temperature of reference thermometer or solution for recalibration 590 K (°R)* (within ±10% of T_s)
Temperature of stack thermometer for recalibration 589 K (°R)
Difference between reference and stack thermometer temperatures, ΔT_s 1.0 K (°R)
Do values agree within ±1.5%?* ✓ yes _____ no
If yes, no correction necessary for calculations
If no, calculations must be done twice--once with the recorded values and once with the average stack temperature corrected to correspond to the reference temperature differential (ΔT_s); both final result values must be reported since there is no way to determine which is correct

(continued)

Barometer

Was the pretest field barometer reading correct? called Honolulu Airport ___ yes ___ no
Posttest comparison?* _____ mm (in.) Hg (±2.5 mm (0.1 in.) Hg)
Was calibration required? _____ yes _____ no
If yes, no correction necessary for calculations when the field barometer has a lower reading; if the mercury-in-glass reading is lower, subtract the difference from the field data readings for the calculation

*Most significant items/parameters to be checked.

Table 5.1 ACTIVITY MATRIX FOR POST-SAMPLING OPERATIONS

Apparatus	Acceptance limits	Frequency and method of measurement	Action if requirements are not met
Pitot tube	If damaged, recalibrate according to Sec 3.1.2	After every field test, visually inspect for damage	Recalibrate, and use calibration factor for data obtained by using damaged pitot tube or repeat the tests
Temperature sensor	Within ±1.5% of absolute temperature	Calibrate with ASTM mercury-in-glass thermometer	Use correction factor on temperature data
Barometer	Within ±2.5 mm (0.1 in.) Hg at ambient pressure	Compare with mercury-in-glass barometer after each test	Recalibrate, and use lower barometric values for calculations

Table 5.1 ACTIVITY MATRIX FOR POSTSAMPLING OPERATIONS

Apparatus	Acceptance limits	Frequency and method of measurements	Action if requirements are not met
Sampling			
Dry gas meter	Within ±5% of calibration factor	Make three runs at a single, intermediate orifice setting and at highest vacuum occurring during test (Sec 3.4.2)	Recalibrate and use calibration factor that gives lesser sample volume
Meter thermometer	Within ±6°C (10.8°F) at ambient pressure	Compare with ASTM mercury-in-glass thermometer after each field test	Recalibrate and use higher temperature for calculations
Barometer	Within ±5 mm (0.2 in.) Hg at ambient pressure	Compare with mercury-in-glass barometer after each field test	Recalibrate and use lower barometric values for calculations
Stack temperature	Within ±1.5% of the reference check temperature (°R)	After each run, compare with reference temperature	Recalibrate and calculate with and without temperature correction

METER BOX CALIBRATION DATA AND CALCULATION FORM (English units)

Nomenclature:

V_w = Gas volume passing through the wet test meter, ft^3.

V_d = Gas volume passing through the dry gas meter, ft^3.

t_w = Temperature of the gas in the wet test meter, °F.

t_{d_i} = Temperature of the inlet gas of the dry gas meter, °F.

t_{d_o} = Temperature of the outlet gas of the dry gas meter, °F.

t_d = Average temperature of the gas in the dry gas meter, obtained by the average t_{d_i} and t_{d_o}, °F.

ΔH = Pressure differential across orifice, in. H_2O.

Y_i = Ratio of accuracy of wet test meter to dry gas meter for each run; tolerance Y_i = Y ±0.02Y.

Y = Average ratio of accuracy of wet test meter to dry gas meter for all six runs; tolerance Y = Y ±0.01Y.

$\Delta H@_i$ = Orifice pressure differential at each flow rate that gives 0.75 ft^3/min of air at standard conditions for each calibration run, in. H_2O; tolerance = $\Delta H@$ ±0.15 (recommended).

$\Delta H@$ = Average orifice pressure differential that gives 0.75 ft^3/min of air at standard conditions for all six runs, in. H_2O; tolerance = 1.84 ±0.25 (recommended).

(1.59 → 2.09)

θ = Time for each calibration run, min.

P_b = Barometric pressure, in. Hg.

Quality Assurance Handbook M4-2.3A (back side)

METER BOX CALIBRATION DATA AND CALCULATION FORM

(English units)

Reg Mag

Date 12-27-83 Meter box number Singer 062

Barometric pressure, P_b = 30.02 in. Hg Calibrated by BJ

Orifice manometer setting (ΔH), in. H_2O	Gas volume: Wet test meter (V_w), ft^3	Gas volume: Dry gas meter (V_d), ft^3	Temperatures: Wet test meter (t_w), °F	Temperatures: Dry gas meter: Inlet (t_{d_i}), °F	Temperatures: Dry gas meter: Outlet (t_{d_o}), °F	Temperatures: Dry gas meter: Avg[a] (t_d), °F	Time (θ), min	Y_i	$\Delta H@_i$ in. H_2O
0.5	5	615.80 / 621.03 / 5.23	1.4 / 55	.3 / 59	60	60	12.63	1.00	1.72
1.0	5	621.59 / 626.93 / 5.34	2.6 / 55	.6 / 58	59	59	9.32	1.00	1.88
1.5	10	638.36 / 649.29 / 10.93	3.8 / 55	1.0 / 58	59	59	15.92	1.00	2.05
2.0	10	650.20 / 661.93 / 11.73	4.6 / 55	1.2 / 59	60	59	14.48	1.01	2.24
3.0	10								
4.0	10							1.00	1.97
							Avg		

ΔH, in. H_2O	$\frac{\Delta H}{13.6}$	$Y_i = \frac{V_w P_b (t_d + 460)}{V_d (P_b + \frac{\Delta H}{13.6}) (t_w + 460)}$	$\Delta H@_i = \frac{0.0317 \Delta H}{P_b (t_d + 460)} \left[\frac{(t_w + 460)\theta}{V_w}\right]^2$
0.5	0.0368		
1.0	0.0737		
1.5	0.110		
2.0	0.147		
3.0	0.221		
4.0	0.294		

[a] If there is only one thermometer on the dry gas meter, record the temperature under t_d.

Date 12-27-83 Potentiometer I.D. 3BA

Ambient temperature 60°F Barometric pressure 30.00 in. Hg

Calibrator BJ Reference: Mercury-in-glass ASTM

Other

Reference Point Number [a]	Source b (specify)	Reference thermometer temperature, °F	Thermocouple potentiometer temperature, °F	Temperature difference,[c] %
	OVEN	130	129	.17
		176	174	.31
		262	263	.14
		295	296	.14
		207	206	.15
				.18

[a]Every 30°C (50°F) for each reference point.

[b]Type of calibration system used

[c] $\frac{(\text{ref temp, °F} + 460) - (\text{test thermocouple temp, °F} + 460)}{\text{ref temp, °F} + 460} \times 100 \leq 1.5\%$

PUMP CHECK DATA FORM

Rest Test

Pump identification number	LEAK RATE CFM	GAUGE VAC. (in Hg)	MAN. VAC (in Hg)	CHECKED BY	DATE
4 CFM #5	0 at	20"	20.2	BJ	12-30-83
4 CFM #3	.003 at	20"	19.9	BJ	12-30-83
4 CFM #4	.006 at	20"	23	BJ	12-30-83
4 CFM #6	0 at	20	19.8	BJ	12-30-83
1 CFM #1	0 at	20"	20.7	BJ	12-30-83
1 CFM #UC-2 (Cal Bad)	at	15"	14.5	BJ	12-30-83

SAMPLE ANALYTICAL DATA FORM

Plant Zimpro (Hawaii) Run number "A"

Sample Location Furnace Exhaust Test Date: 12-13-83

Relative humidity 50%

Nozzle container number Sample 4

Date and Time of weight 12-21-83 0900 Gross wt. 346623 ~~mg.~~ g

Date and Time of weight 12-21-83 1320 Gross wt. 346631 ~~mg.~~ g

Average Gross wt. 346627 ~~mg.~~ g

Tare wt. 346615 ~~mg.~~ g

Weight of particulate on nozzle 1.2 mg.

Filter container number B.A. # 37

Date and time of wt. 12-21-83 0915 Gross wt. 62.6813 ~~mg.~~ g

Date and time of wt. 12-21-83 1315 Gross wt. 62.6813 ~~mg.~~ g

Average Gross wt. 62.6813 ~~mg.~~ g

Tare wt. 62.6763 ~~mg.~~ g

Weight of particulate on filter 5.0 mg.

Filter container number EPA # 18

Date and time of wt. 12-21-83 0923 Gross wt. 97.1267 ~~mg.~~ g

Date and time of wt. 12-21-83 1300 Gross wt. 97.1267 ~~mg.~~ g

Average Gross wt. 97.1267 ~~mg.~~ g

Tare wt. 97.1265 ~~mg.~~ g

Weight of particulate on filter .2 mg.

Total weight of particulate (filters & nozzle) 6.4 mg.

Remarks filters are very clean; and just a slight discoloration

Signature of analyst Rick Ulbrich

Signature of reviewer E A Gaeth

SAMPLE ANALYTICAL DATA FORM

Plant Zimpro (Hawaii) Run number B

Sample Location Furnace Exhaust

Relative humidity 50%

Nozzle container number 6 mm L

Date and Time of weight 12-21-83 0900 Gross wt. 39.3300 ~~mg.~~ g

Date and Time of weight 1325 Gross wt. 39.3301 ~~mg.~~ g

Average Gross wt. 39.3300 ~~mg.~~ g

Tare wt. 39.3300 ~~mg.~~ g

Weight of particulate on nozzle -0- mg.

Filter container number B.A. #97

Date and time of wt. 12-21-83 0919 Gross wt. 62.3993 ~~mg.~~ g

Date and time of wt. 12-21-83 1310 Gross wt. 62.3995 ~~mg.~~ g

62.3990 g

Average Gross wt. 62.3993 ~~mg.~~ g

Tare wt. 62.3913 ~~mg.~~ g

Weight of particulate on filter 8.0 mg.

Filter container number EPA #1

Date and time of wt. 12-21-83 0920 Gross wt. 90.7513 ~~mg.~~ g

Date and time of wt. 12-21-83 1308 Gross wt. 90.7513 ~~mg.~~ g

Average Gross wt. 90.7513 ~~mg.~~ g

Tare wt. 90.7510 ~~mg.~~ g

Weight of particulate on filter .3 ~~mg.~~ mg

Total weight of particulate (filters & nozzle) 8.3 mg.

Remarks filters very clean almost like brand-new

Signature of analyst Rick R. Ullrich

Signature of reviewer

SAMPLE ANALYTICAL DATA FORM

Plant Zimpro Hawaii Run number C

Sample Location Furnace Exhaust

Relative humidity 50%

Nozzle container number 5mm Q

Date and Time of weight 12-21-83 0905 Gross wt. 37.0755 mg. g

Date and Time of weight nozzle chipped in transfer Gross wt. _____ mg. g

Average Gross wt. 37.0755 mg. g

Tare wt. 37.0736 mg. g

Weight of particulate on nozzle 1.9 mg.

Filter container number BA # 38

Date and time of wt. 12-21-83 0918 Gross wt. 62.6946 mg. g

Date and time of wt. 12-21-83 1310 Gross wt. 62.6950 mg. g

Average Gross wt. 62.6948 mg. g

Tare wt. 62.6884 mg. g

Weight of particulate on filter 6.2 mg.

Filter container number EPA # 5

Date and time of wt. 12-21-83 0926 Gross wt. 92.2904 mg. g

Date and time of wt. 12-21-83 1305 Gross wt. 92.2910 mg. g

Average Gross wt. 92.2907 mg. g

Tare wt. 92.2901 mg. g

Weight of particulate on filter .6 mg.

Total weight of particulate (filters & nozzle) 8.7 mg.

Remarks filters are clean just like previous tests

Signature of analyst Rick R. Ulrich

Signature of reviewer _____

GAS ANALYSIS DATA FORM

PLANT Zimpro (Hawaii)
DATE 12-21-83 TEST NO 1 Test Date: 12-13-83
SAMPLING TIME (24-hr CLOCK) Same as PARTICULATE TEST #
SAMPLING LOCATION Furnace Exhaust
SAMPLE TYPE (BAG, INTEGRATED, CONTINUOUS) Stainless Steel
ANALYTICAL METHOD ORSAT
AMBIENT TEMPERATURE 76 °F
OPERATOR R.R.H.

COMMENTS: "CO" not test for because concentrations are below what the ORSAT can analyze.

GAS \ RUN	1		2		3		AVERAGE NET VOLUME	MULTIPLIER	MOLECULAR WEIGHT OF STACK GAS ~~(DRY BASIS)~~ M_d
	ACTUAL READING	NET	ACTUAL READING	NET	ACTUAL READING	NET			
CO_2	7.6	7.6%	7.6	7.6%			7.6%	44/100	
O_2 (NET IS ACTUAL O_2 READING MINUS ACTUAL CO_2 READING)	18.6	11.0%	18.6	11.0%			11.0%	32/100	
~~CO (NET IS ACTUAL CO READING MINUS ACTUAL O_2 READING)~~	WATER	VAPOR					6.5	~~28~~/100	
N_2 (NET IS 100 MINUS ACTUAL CO READING)							Balance	28/100	
							TOTAL	29.02	

Quality Assurance Handbook M3-4.2

GAS ANALYSIS DATA FORM

PLANT Zimpro (Hawaii)

DATE 12-21-83 TEST NO "B" Date Tested: 12-13-83

SAMPLING TIME (24-hr CLOCK) SAME as particu. test B

SAMPLING LOCATION Furnace Exhaust

SAMPLE TYPE (BAG, INTEGRATED, CONTINUOUS) stainless Steel.

ANALYTICAL METHOD ORSAT

AMBIENT TEMPERATURE 74°F

OPERATOR RRU

COMMENTS:

GAS \ RUN	1		2		3		AVERAGE NET VOLUME	MULTIPLIER	MOLECULAR WEIGHT OF STACK GAS (M_d)
	ACTUAL READING	NET	ACTUAL READING	NET	ACTUAL READING	NET			
CO_2	7.4	7.4%	7.6	7.6%			7.5%	44/100	
O_2 (NET IS ACTUAL O_2 READING MINUS ACTUAL CO_2 READING)	18.6	11.2%	19.0	11.4%			11.3%	32/100	
CO (NET IS ACTUAL CO READING MINUS ACTUAL O_2 READING)	WATER	VAPOR					6.2%	18/100	
N_2 (NET IS 100 MINUS ACTUAL CO READING)							Balance	28/100	
							TOTAL	29.04	

Quality Assurance Handbook M3-4.2

GAS ANALYSIS DATA FORM

PLANT Zinpro (Hawaii)
DATE 12-21-83 TEST NO. "C" Date Tested: 12-13-83
SAMPLING TIME (24-hr CLOCK) SAME as particle test "C"
SAMPLING LOCATION Furnace Exhaust
SAMPLE TYPE (BAG, INTEGRATED, CONTINUOUS) Stainless Steel
ANALYTICAL METHOD ORSAT
AMBIENT TEMPERATURE 70°F
OPERATOR RRU

COMMENTS:

GAS \ RUN	1		2		3		AVERAGE NET VOLUME	MULTIPLIER	MOLECULAR WEIGHT OF STACK GAS (~~DRY BASIS~~) M_d
	ACTUAL READING	NET	ACTUAL READING	NET	ACTUAL READING	NET			
CO_2	7.4	7.4%	7.0	7.0%			7.2%	44/100	
O_2 (NET IS ACTUAL O_2 READING MINUS ACTUAL CO_2 READING)	19.0	11.6%	18.2	11.2%			11.4%	32/100	
CO ~~(NET IS 100 MINUS ACTUAL CO READING)~~	Water Vapor						6.6%	28/100	
N_2 (NET IS 100 MINUS ACTUAL CO READING)								28/100	
								TOTAL	28.95

Quality Assurance Handbook M3-4.2