Note: This material is related to a section in *AP42, Compilation of Air Pollutant Emission Factors, Volume I Stationary Point and Area Sources.* AP42 is located on the EPA web site at www.epa.gov/ttn/chief/ap42/

The file name refers to the file number, the AP42 chapter and then the section. The file name "rel01_c01s02.pdf" would mean the file relates to AP42 chapter 1 section 2. The document may be out of date and related to a previous version of the section. The document has been saved for archival and historical purposes. The primary source should always be checked. If current related information is available, it will be posted on the AP42 webpage with the current version of the section.

Background Report Reference

AP-42 Section Number: 2.2

Background Chapter: 4

Reference Number: 76

Title: Incinerator Compliance Test at the Willimantic Sewage Treatment Plant in Willimantic, Connecticut

York Research Corp.

York Research Corp.

February 1974

#136

STAPPA/ALAPCO 12/17/86 BR 2.2
25 730082 #76
4.0

INCINERATOR COMPLIANCE TEST

at

THE WILLIMANTIC

SEWAGE TREATMENT PLANT

in

WILLIMANTIC, CONNECTICUT

for

MSI INDUSTRIES, INC.
DENVER, COLORADO

Prepared By

YORK RESEARCH CORPORATION
ONE RESEARCH DRIVE
STAMFORD, CONNECTICUT 06906

REPORT NO. Y-8300W

February 12, 1974

TABLE OF CONTENTS

I. ABSTRACT

II. SUMMARY OF RESULTS

III. GENERAL TEST METHODS

IV. APPENDIX

Particulate Calculations
Particulate Field Data
Gas Calculations
Gas Field Data
Intent to Test Acceptance Letter
Equipment Calibration Data

I. ABSTRACT

On January 23rd and 24th, 1974, York Research, an independent consulting firm in the environmental field, began a series of emission sampling tests at the Willimantic Sewage Treatment Plant in Willimantic, Connecticut.

The purpose of these tests was to determine compliance with Connecticut State Regulations for particulate emissions from an incinerator. NO_x, SO_x, hydrocarbons and CO were also tested per a State request.

The Connecticut State Regulations as specified in "Administrative Regulations", Department of Environmental Protection, Abatement of Air Pollution, May 23, 1972, Page 14B, Section 19-508-18 "Control of Particulate Emissions" subsection (C) (3) (i) "Emission Standards. Particulates" states:

> No person shall construct, install, use or cause to be used any new (constructed or modified after June 1, 1972) incinerator which will result in particulate matter in the effluent in excess of 0.08 gr/SCF (0.18 gm/NM^3) corrected to 12% CO_2, maximum 2 hour average. No person shall use or cause to be used any existing incinerator which will emit more than 0.4 lb. particulate/1000 lbs. of flue gases adjusted to 50% excess air.

The following Table gives the results of the scrubber outlet sampling in terms as used in the Connecticut State Regulations.

Particulate Test	gr/SCF (12% CO_2)	lbs./1000 lbs. (Flue Gas @ 50% excess air
1	.137	.155
2	.208	.198
3	.264	.252
Average	.203	.202
State Limitations	.08 gr/SCF (12% CO_2)	.4 lbs/1000 lbs. (Flue Gas @ 50% Excess Air)

II. SUMMARY OF RESULTS

PARTICULATE

Test	1	2	3	Average
Date	1/23/74	1/24/74	1/24/74	-
Time	1450-1650	1137-1323	1520-1721	-
% Moisture (Gas)	11.10	11.12	11.31	11.18
% CO_2	3.8	2.8	2.8	3.13
% O_2	14.4	14.8	14.8	14.7
% CO	0.2	0.4	0.4	0.33
% N_2	81.6	82.0	82.0	81.9
Stack Temp. (°F)	143	128	136	136
Stack Velocity (FPM)	2273	2150	2384	2269
Stack Volume (SCFMD)	5568	5473	5978	5673
gr/SCF	.0435	.0485	.0616	.0512
gr/ACF	.0339	.0393	.0491	.0408
Lb./Hr.	2.08	2.27	3.16	2.50
*gr/SCF @ 12% CO_2	.137	.208	.264	.203
**Lb/1000 Lb. Flue Gas @ 50% ex.air	.155	.198	.262	.202
% Excess Air	203	247	247	232.3
***Feed Rate Tons/Hr.	1.93	1.82	3.10	2.28

*The State limit for new incinerators is .08 gr/SCF @ 12% CO_2

**The State limit for existing incinerators is .40 Lb./1000 Lb. Flue Gas @ 50% Excess Air

***These readings are questionable due to problems encountered with the scale.

OXIDES OF NITROGEN

Test	1a	1b	1c	2a	2b	2c	3a	3b	3c	Average
Date	1/23/74	1/23/74	1/23/74	1/24/74	1/24/74	1/24/74	1/24/74	1/24/74	1/24/74	
Time	1611	1645	1703	1149	1224	1257	1531	1549	1606	
*NO_2 (ppm)	51.5	13.3	30.5	27.2	33.5	46.5	35.6	26.2	40.0	33.8
Lb/Hr	2.05	.528	1.21	1.06	1.31	1.82	1.52	1.12	1.71	1.37

*State Limit is 700 ppm NO_2

HYDROCARBONS

Test	1	2a	2b	3a	3b	3c	
Date	1/23/74	1/24/74	1/24/74	1/24/74	1/24/74	1/24/74	Average
Time	1502	1205	1300	1545	1607	1658	
ppm*	10.3	3.9	32.7	2.0	1.1	1.2	8.54

*No specific State Limit

*Based on C_6H_{14}

OXIDES OF SULFUR

Test	1a	1b	2a	2b	3a	3b	Average
Date	1/23/74	1/23/74	1/24/74	1/24/74	1/24/74	1/24/74	
Time	1404-1425	1529-1550	1101-1130	1341-1414	1518-1551	1638-1705	
*SO_2 (ppm)	34.4	79.6	48.1	53.5	47.5	31.2	49.05
Lb/hr	1.90	4.41	2.62	2.91	2.83	1.86	2.76
SO_3 (ppm)	23.2	21.5	11.3	8.6	15.4	24.6	17.43
Lb/hr	1.60	1.49	.765	.581	1.14	1.82	1.23

*The State limit is 500 ppm SO_2

PROXIMATE SLUDGE ANALYSIS

Test	1	1	2 & 3	2 & 3
Drying Temperature	100°F	105°C	100°F	105°C
Date	1/23/74	1/23/74	1/24/74	1/24/74
Moisture (%)	79.72	80.66	81.51	83.41
Volatiles (%) @ 600°C	14.00	13.66	12.30	10.93
Ash (%)	5.12	4.62	5.06	4.60
Fe (%)	0.89	0.83	0.88	0.83
Ca (%)	0.27	0.23	0.25	0.23
BTU/Lb. (Dry)	8126	8058	7933	7675

ave = 81.3

ULTIMATE SLUDGE ANALYSIS

Test	1	2-3
% Carton (Dry)	37.33	38.29
% Hydrogen (Dry)	5.57	5.36
% Nitrogen (Dry)	3.09	2.17
% Oxygen (Dry)	21.91	19.49
% Sulfur (Dry)	.717	.713
% Sulfur (As received)	.099	.107
% Combustibles (Dry)	68.61	61.63
% Combustibles (as received)	10.10	9.71
% Hexane Extraction (Dry)	87.59	87.79
% Hexane Extraction (As received)	12.12	13.71

ASH ANALYSIS

Test	1-2-3
Date	1-23, 24-74
Moisture (%)	0.07
Volatiles (%)	0.62

SCRUBBER WATER ANALYSIS

Test	1-2-3
Date	1-23, 24-74
pH	7.01
Suspended Solids	21.95 mg/liter

III. GENERAL TEST METHODS

DESCRIPTION OF OPERATIONS

The incinerator is a multiple-hearth furnace with six (6) hearths. The temperatures in the furnace are regulated by burners located on hearths 2, 4 and 6. The furnace is designed to burn 8000 lb./hr. of a mixture of primary and secondary sludge.

As the sludge is burned, a relatively large amount of gases are produced. What remains after combustion is a sterile ash which is transported to another location by some suitable means. Along with the combustion gases produced by the sludge and auxiliary fuel (if any) is particulate matter. This particulate matter is passed through a pre-cooling chamber and a scrubbing system which removes the dust particles.

The scrubber is an impingement type using 300 GPM total water for adequate scrubbing of gases. The scrubber has an outlet volume of 7160 ACFM (maximum) @ 120°F with a differential pressure of 6.5 W.C. at the designed scrubber outlet volume with a design outlet dust loading of approximately .03 gr./ standard dry cubic foot exhaust gas.

The exhaust gases are moved through the entire system by an induced draft fan located between the scrubber outlet and the stack, and designed to move 8000 CFM at 120°F (See Figure #1).

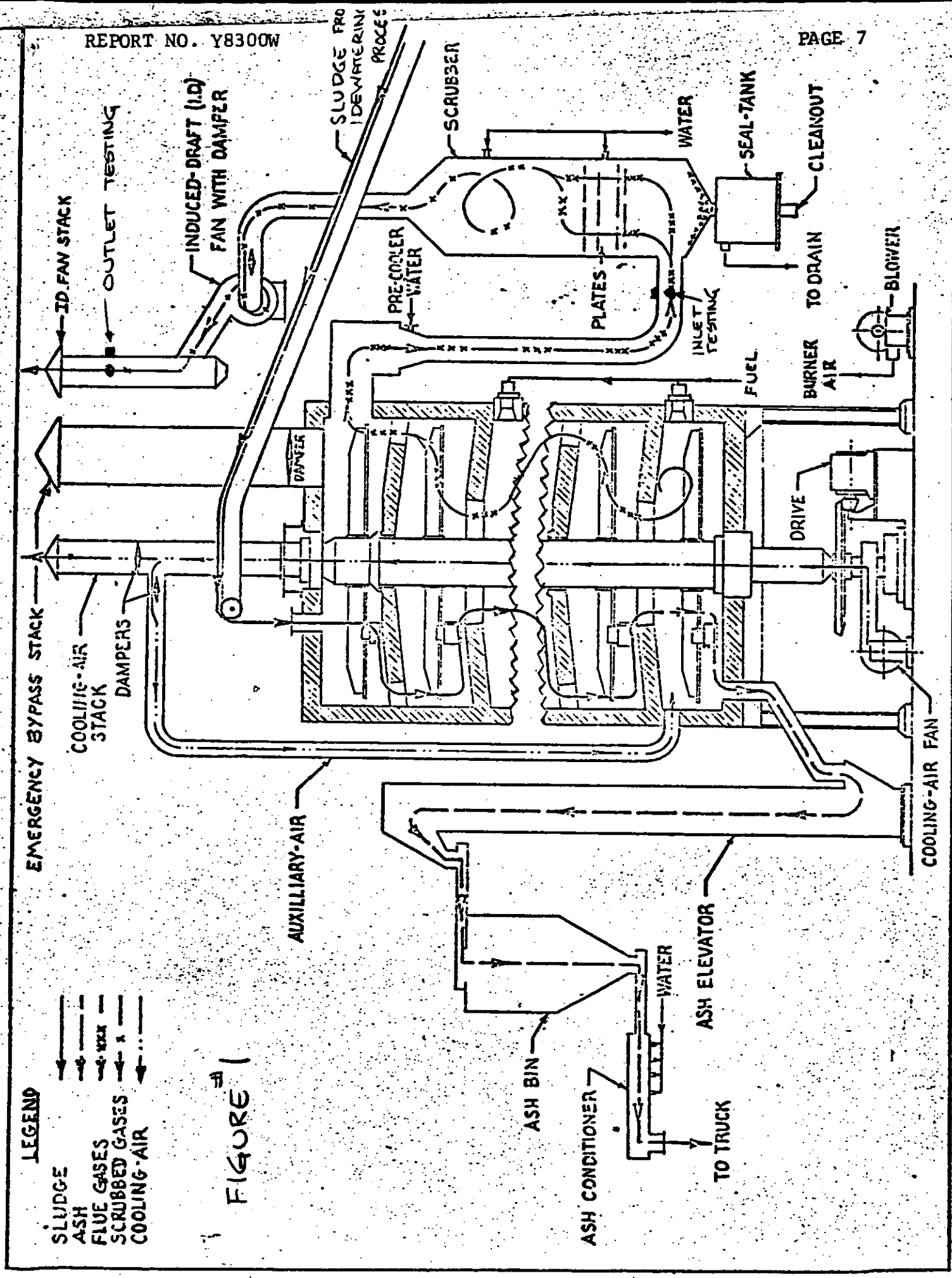
ID. FAN STACK
OUTLET TESTING
INDUCED-DRAFT (I.D.) FAN WITH DAMPER
SLUDGE FROM DEWATERING PROCESS
SCRUBBER
WATER
SEAL-TANK
CLEANOUT
TO DRAIN
BLOWER
PRE-COOLER WATER
PLATES
INLET TESTING
FUEL
BURNER AIR
DAMPER
DRIVE
EMERGENCY BYPASS STACK
COOLING-AIR STACK
DAMPERS
AUXILLIARY-AIR
COOLING-AIR FAN
ASH ELEVATOR
WATER
ASH BIN
ASH CONDITIONER
TO TRUCK
LEGEND
SLUDGE
ASH
FLUE GASES
SCRUBBED GASES
COOLING-AIR

FIGURE #1

SAMPLING LOCATIONS - PORTS

Particulate sampling ports at the outlet were located in accordance with EPA guidelines. The sampling ports were located so that the distance to nearest interferences upstream (6 duct diameters) and downstream (1.5 diameters) were far enough away as not to cause any undue turbulence in the gas flow (Figure #2).

FIGURE # 2

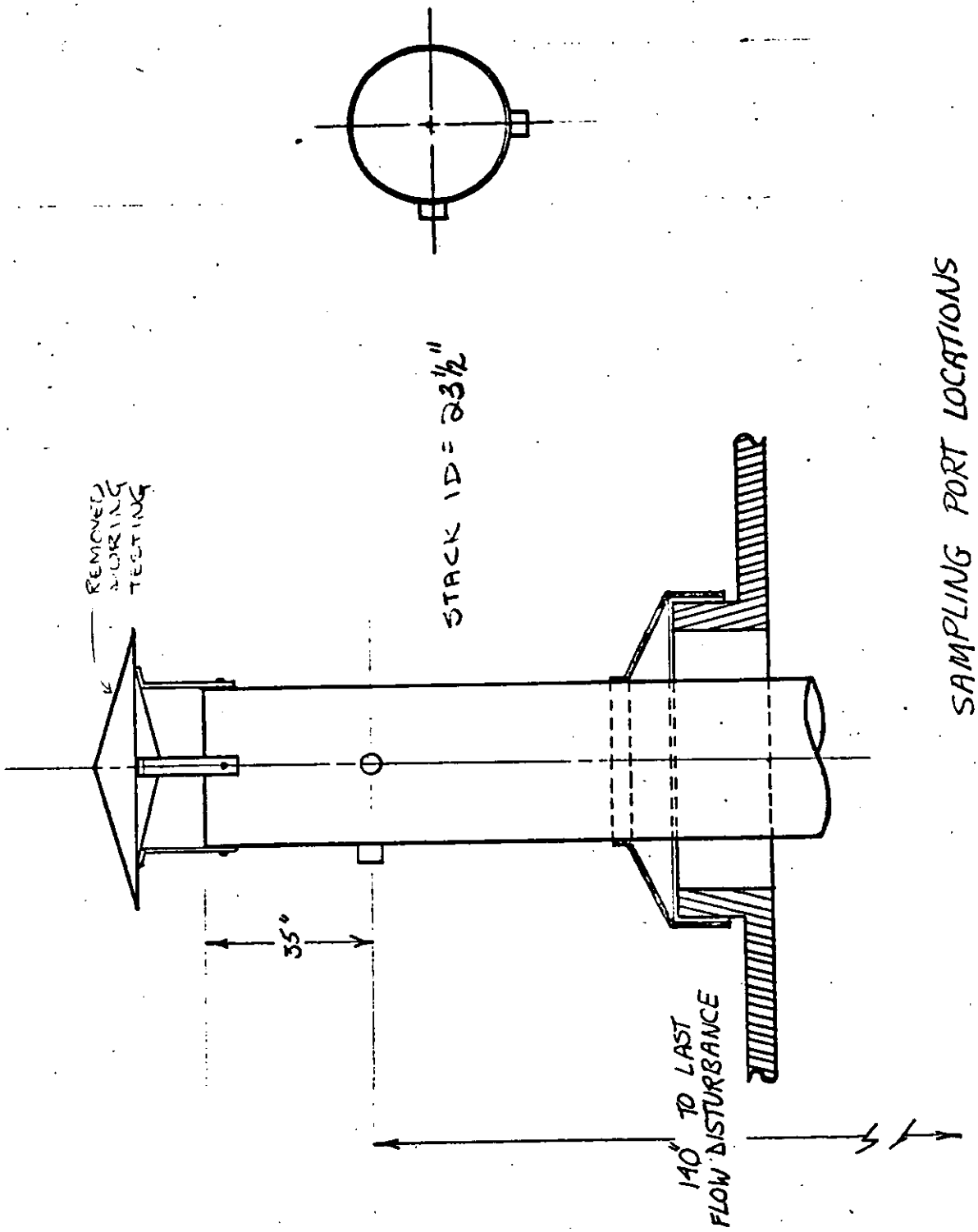

SAMPLING PORT LOCATIONS

SAMPLING LOCATION - TEST POINTS

The round 23 1/2" ID outlet stack had two ports at right angles (90°) for twenty test points (ten at each traverse).

The test points were sampled for five minutes each. The location of each test point was determined from EPA specifications (Figure #3).

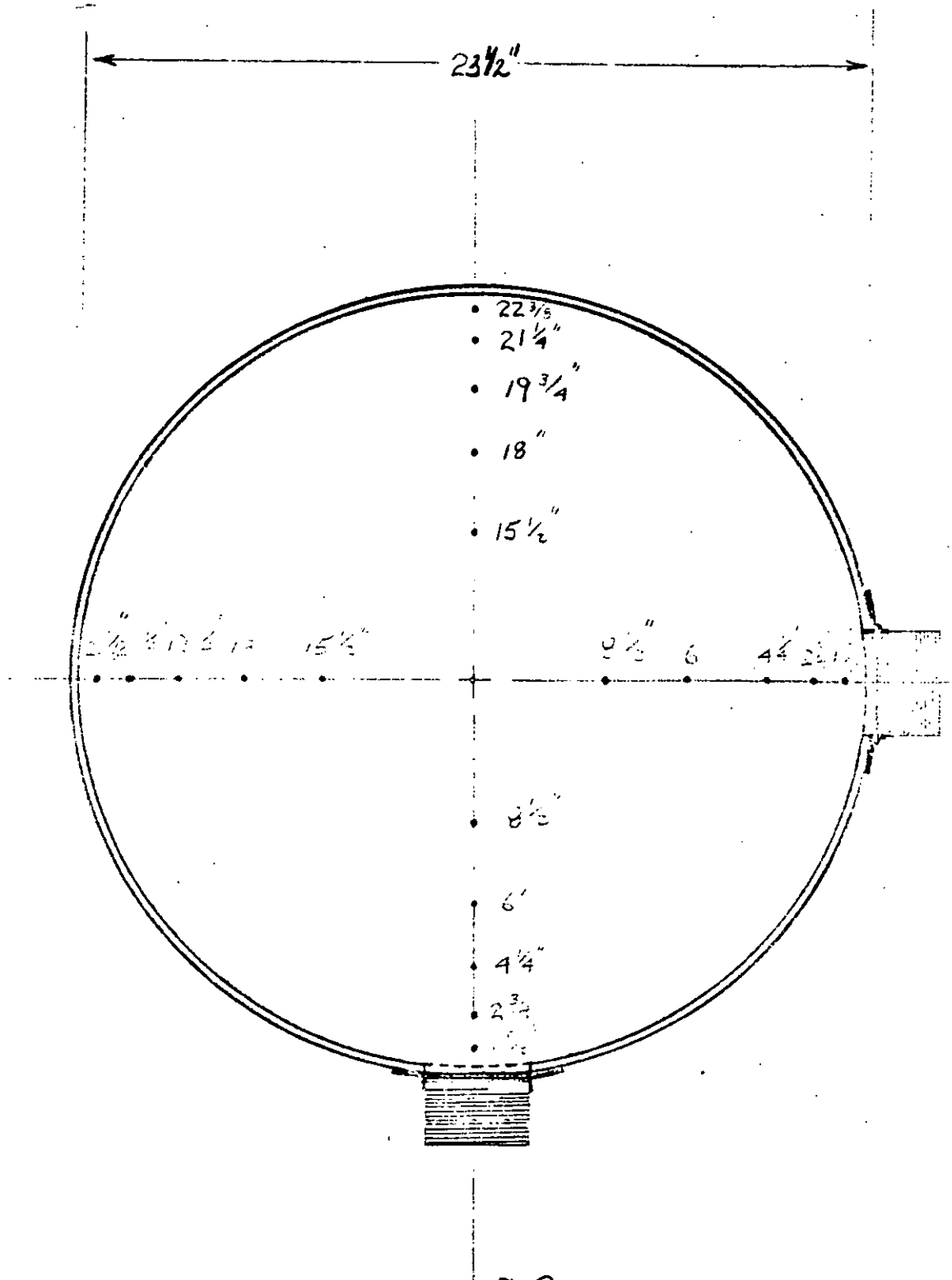

FIGURE # 3

OUTLET
SAMPLING POINT LOCATIONS

III. GENERAL TEST METHODS

Particulate Sampling Train - EPA Method 5

The sampling apparatus consisted of a five (5) foot probe, cyclone bypass, filter, four impingers, dry gas meter, vacuum pump and flow meter (See Figure 4). The stainless steel, button-hook type probe tip (1) was connected by a stainless steel coupling (2) with asbestos packing to the probe. The probe (3) consisted of 5/8 inch outside diameter medium wall Pyrex glass tube with a ground balljoint on one end. The probe was logarithmically wound from the entrance end with 26-gauge nickel-chromium wire. During sampling, the wire was connected to a variable transformer to maintain a gas temperature of 300°F in the probe. The wire wound tube was wrapped with fiberglass tape and encased in a 1-inch-OD stainless steel casing for protection. The end of the steel probe casing does not have the balljoint protruding but has a nut welded to it for connection to the stainless steel coupling used to attach the nozzle. The probe connects to a cyclone bypass (4). The cyclone bypass connects to a very coarse fritted glass filter holder (5), which holds a tared glass fiber filter. The cyclone, flask, and filter were contained in an electrically heated enclosed box (6) which is thermostatically maintained at a minimum temperature of 300°F to prevent water condensation. Attached to the heated box was an ice bath (7) containing four impingers connected in series with glass balljoints. The first impinger (8) receives the gas stream from the filter. This impinger is of the Greenburg-Smith design modified by replacing the tip with a 1/2 inch ID glass tube extending to 0.5 inches from the bottom of the flask. This impinger was initially filled with 100 milliliters of distilled water. The second impinger (9) is of the Greenburg-Smith design and like the first was initially filled with 100 milliliters of distilled water. The third impinger (10), which was left dry, is a Greenburg-Smith impinger modified like the first. The fourth impinger (11) is also a Greenburg-Smith type modified like the first and contained dry silica gel.

From the fourth impinger (11) the effluent stream flows through a check valve (13); flexible rubber vacuum tubing (14); vacuum gauge (15); a needle valve (16); a leakless vacuum pump (17), rated at 4 cubic feet per minute at 0 inches of mercury gauge pressure and 0 cubic feet per minute at 26 inches of mercury gauge pressure, and connected in parallel with a bypass valve (18); and a dry gas meter rated at .1 cubic foot per revolution (19). A calibrated orifice (20) completes the train and was used to measure instantaneous flow rates. The three thermometers (12) are dial type with a range of 25° to 125°F. A fourth thermometer in the heated portion of the box has a range up to 500°F. The dual manometer (21) across the calibrated orifice is an inclined-vertical type graduated in hundrdths of an inch of water from 0 to 1.0 inch and in tenths from 1 to 10 inches.

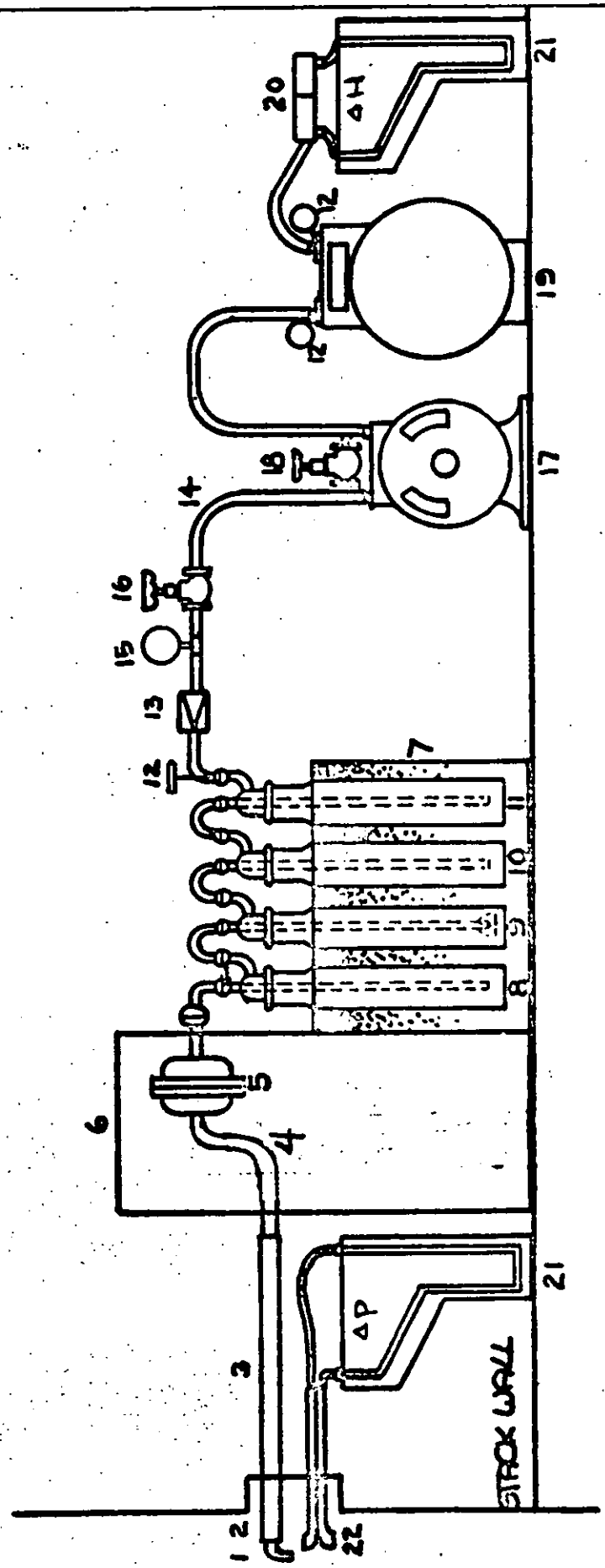
PARTICULATE SAMPLING TRAIN
STACK WALL
ΔP
ΔH
1
2
3
4
5
6
7
8
9
10
11
12
13
14
15
16
17
18
19
20
21
22

FIGURE #4

Readings Taken

During each run the following readings were taken at each point:

1. Point Designation
2. Clock Time
3. Dry gas meter reading (CF)
4. Velocity head (Δ P in inches water)
5. Desired pressure drop across orifice (Δ H in inches of water)
6. Actual pressure drop across orifice (Δ H in inches of water)
7. Dry gas temperature (°F) gas meter inlet
8. Dry gas temperature (°F) gas meter outlet
9. Vacuum pump gauge reading (in. Hg)
10. Filter box temperature (°F)
11. Dry gas temperature (°F) at the discharge of last impinger
12. Stack temperature (°F)
13. Stack pressure (inches water)

The relationship of Δ P reading with the Δ H reading is a function of the following variables:

1. Orifice calibration factor
2. Gas meter temperature
3. % moisture in the flue gas
4. Ratio of flue gas pressure to barometric pressure
5. Stack temperature
6. Sampling nozzle diameter

A nomograph was used to correlate all the above variables such that a direct relationship between Δ P and Δ H could be determined by the sampler within fifteen seconds and isokinetic conditions maintained throughout the test.

ANALYTICAL PROCEDURE - PARTICULATES

The filter discs were previously tare-weighed and the weights recorded at York Research's Laboratory. Upon return they were dried, cooled in a dessicator, then weighed on an analytical balance. The amount of particulate collected is the difference in the weights. The probe and nozzle water and acetone wash solutions are placed into respective tared beakers, evaporated with an infra-red lamp and the beakers weighed again. The difference in the weights is the weight of the particulate in the washes. These are combined with the filter catch as the total weight of the sample.

PARTICULATE CALCULATIONS

The following are the basic equations used in calculating final data as found in the final summary.

1. Volume of dry gas sampled at standard conditions - 70°F, 29.92" Hg, ft.^{3}

$$V_{m_{std}} = \frac{17.7 \times V_m \left(P_b + \frac{P_m}{13.6}\right)}{(T_m + 460)} = \text{Ft.}^3$$

2. Volume of water vapor at 70°F and 29.92" Hg, Ft.^{3}

$$V_{w_{gas}} = 0.0474 \times V_w = \text{Ft.}^3$$

3. % Moisture in stack gas

$$\%M = \frac{100 \times V_{w_{gas}}}{V_{m_{std}} + V_{w_{gas}}} = \%$$

4. Mole fraction of dry gas

$$M_d = \frac{100 - \%M}{100}$$

5. Average molecular weight of dry stack gas

$$M\,W_d = \left(\% CO_2 \times \frac{44}{100}\right) + \left(\%O_2 \times \frac{32}{100}\right) + \left(\%N_2 \times \frac{28}{100}\right)$$

6. Molecular weight of stack gas

$$M\,W = M\,W_d \times M_d + 18\,(1 - M_d)$$

7. Stack velocity at stack conditions, fpm

$$V_s = 4350 \times \sqrt{\Delta P_s \times (T_s + 460)} \left(\frac{1}{P_s \times M\ W}\right)^{1/2} = \text{fpm}$$

8. Stack gas volume at standard conditions, SCFM

$$Q_s = \frac{0.123 \times V_s \times A_s \times M_d \times P_s}{(T_s + 460)} = \text{SCFM}$$

9. Percent isokinetic

$$\%I = \frac{1032 \times (T_s + 460) \times V_{m_{std}}}{V_s \times T_t \times P_s \times M_d \times (D_n)^2} = \%$$

10. Particulate - probe, cyclone and filter, gr/SCF

$$C_{an} = 0.0154 \times \frac{M_f}{V_{m\ std}} = \text{gr/SCF}$$

11. Particulate total, gr/SCF

$$C_{ao} = 0.0154 \times \frac{M_t}{V_{m\ std}} = \text{gr/SCF}$$

12. Particulate - probe, cyclone and filter, gr/CF at stack conditions

$$C_{at} = \frac{17.7 \times C_{an} \times P_s \times M_d}{(T_s + 460)} = \text{gr/CF}$$

13. Particulate - total, gr/CF at stack conditions

$$C_{au} = \frac{17.7 \times C_{ao} \times P_s \times M_d}{(T_s + 460)} = \text{gr/CF}$$

14. Particulate - probe, cyclone and filter, lb/hr.

$C_{aw} = 0.00857 \times C_{an} \times Q_s$ = lb/hr.

15. Particulate - total, lb/hr.

$C_{ax} = 0.00857 \times C_{ao} \times Q_s$ = lb/hr.

16. % Excess air at sampling point

$$\% EA = \frac{(\% O_2) - 0.5 (\% CO)}{0.264 (\% N_2) - (\% O_2) + 0.5 (\% CO)} \times 100$$

17. PARTICULATE EMISSIONS IN GRAINS PER STANDARD CUBIC FOOT DRY ADJUSTED TO 12% CO_2

$$GR/SCFD @ 12\% CO_2 = C_{an} \times \frac{12.0}{\text{MEASURED } \% CO_2}$$

18. PARTICULATE EMISSIONS IN POUNDS EMISSION PER 1000 POUNDS OF FLUE GAS ADJUSTED TO 50% EXCESS AIR

$$LB/1000 @ 50\% E.A. = 1000 \times \frac{C_{aw}}{60} \times \frac{100 + \% EA}{150} \times \frac{387}{MW} \times \frac{M_d}{Q_s}$$

VELOCITY DETERMINATION

To determine the gas velocity an "S" type pitot tube, manometer, thermocouple, and a pyrometer were employed (See Figure #5).

The probe tip was placed at each point shown in Figure #3 and the " Δ P" (differential pressure), across the front and back face of the pitot tube, is indicated by the manometer in inches of H_2O.

The probe is turned at right angles to the gas flow and one connection to the manometer is opened to atmospheric pressure. The reading in inches of water ("H_2O) is noted as the static pressure and recorded on the Data Sheet.

The thermocouple junction reacts to the surrounding temperature by producing a voltage differential. This voltage is read out directly by a potentiometer in degrees fahrenheit (°F).

VELOCITY DETERMINATION

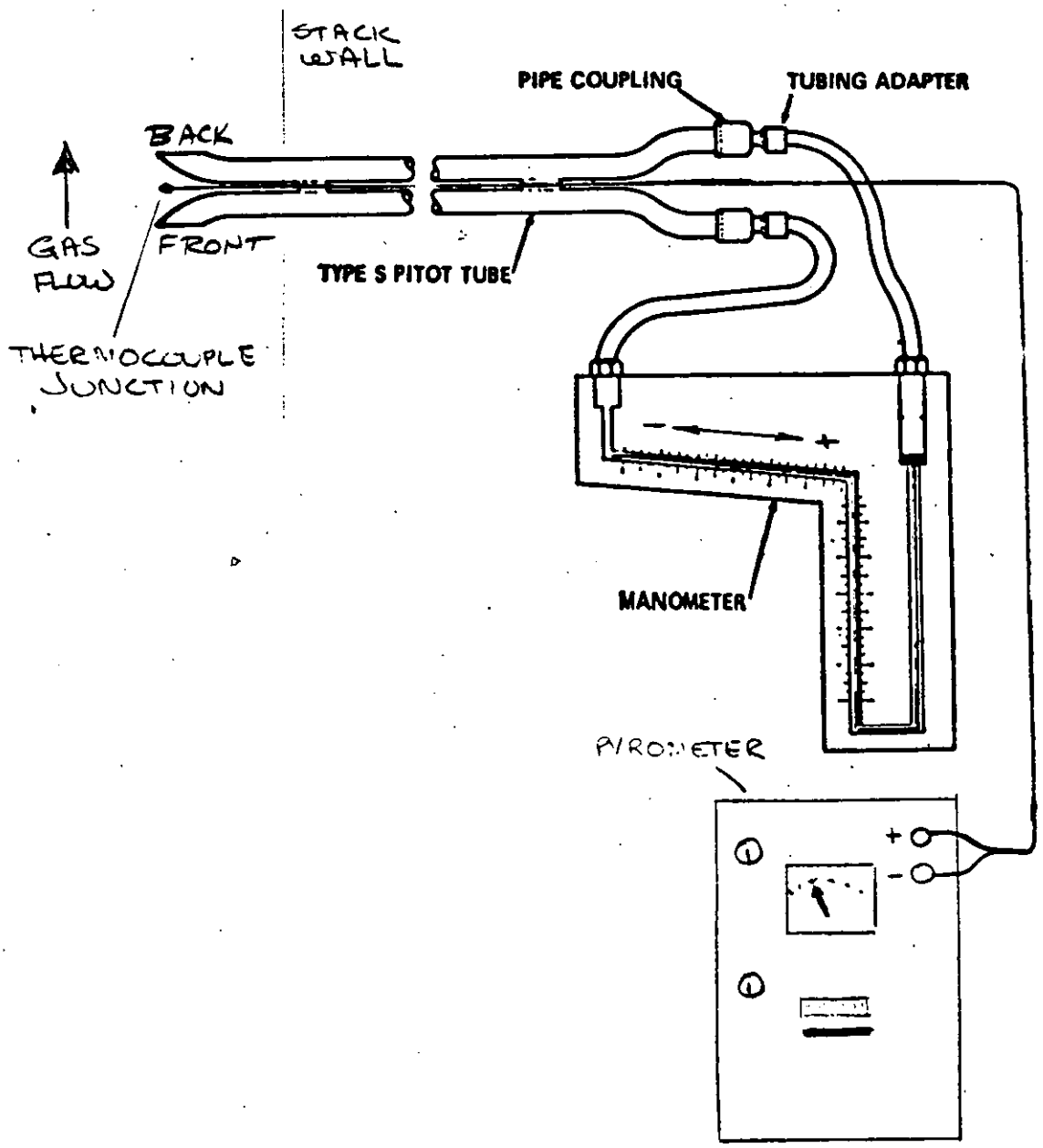

FIGURE #5

HYDROCARBON SAMPLING

The hydrocarbon sampling train consists of (1) a heated glass probe, (2) a 3 inch coupling, (3) an aluminum box, (4) three 250 Ml hydrocarbon sampling flasks. The flasks are connected to a manifold with 12/5 ball and socket joints, (5) two 350 watt strip heaters (one on the bottom of the box, the other inside the top cover), (6) a thermometer, (7) the exhaust from the box to the pump inlet. (See Figure #6.)

A sample is drawn through one flask at a time, for a minute or two. The valve on the pump end of the flask is closed first, then the valve on the probe end.

HYDROCARBONS ANALYSIS

The method used to measure the hydrocarbon sample is with a Perkin-Elmer 881 gas chromatograph with flame ionization detectors. A 1/8" blank stainless steel column at 200°C with a Perkin-Elmer 1cc gas sampling loop is used to inject the sample into the detector.

The samples are heated and displaced from the flask with mercury. Standards are made up from calibrated gases using a ppm Hexane in N_2 standards.

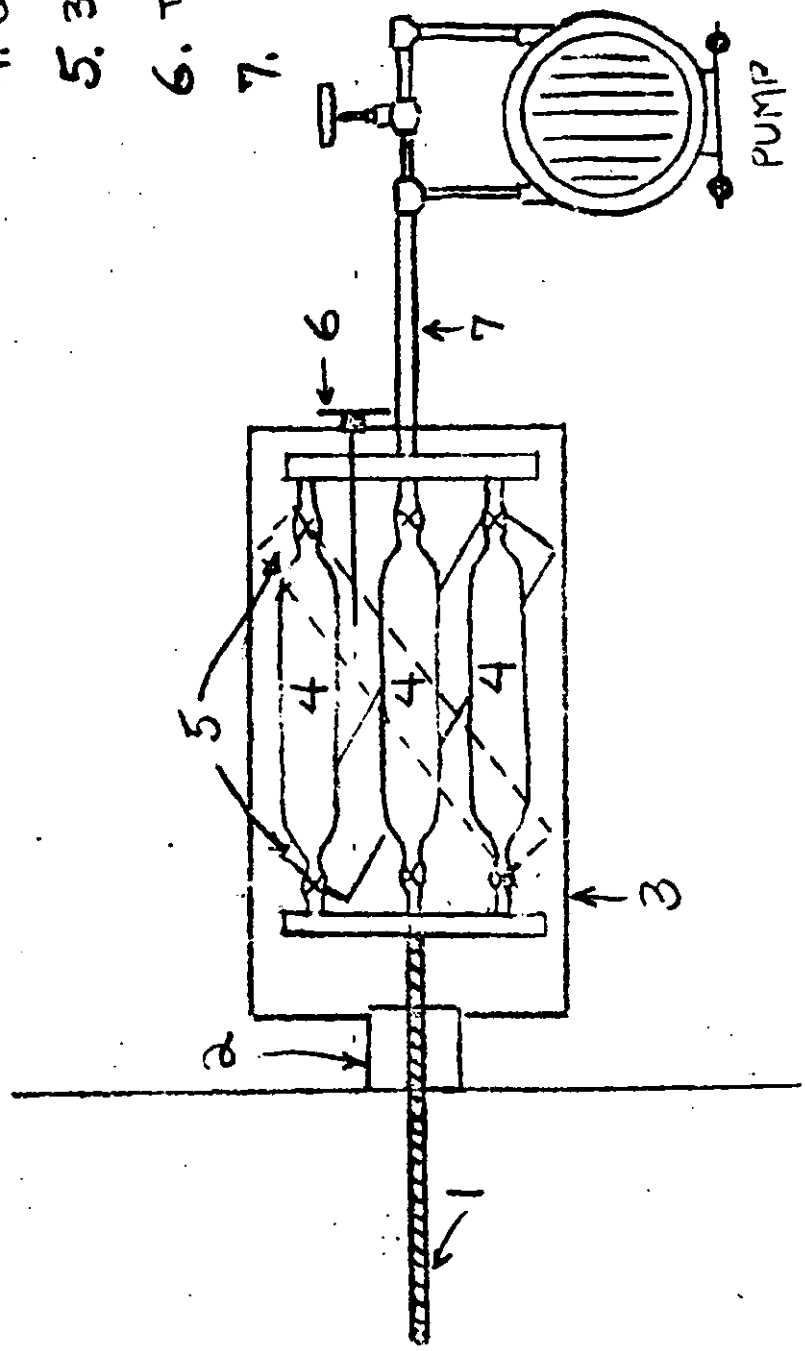

HYDROCARBON SAMPLING
FIGURE #6

OXIDES OF NITROGEN SAMPLING (EPA Method No. 7)

A grab sample is collected in an evacuated flask containing a dilute sulfuric acid - hydrogen peroxide absorbing solution.

The sampling procedure consists of pipetting 25 ml of H_2SO_4 - H_2O_2 absorbing solution into a 2 liter sampling flask. The flask is then evacuated to at least 3 in. Hg. absolute pressure. The next step is to evacuate the probe prior to sampling. The sample is then taken over a period of 15 seconds. After the sample has been collected, the flask is shaken for approximately 5 minutes. After this period the flask must be left with the sample for a minimum of 16 hours. After the 16 hours, the flask is reshaken for a period of two minutes. After this the final pressure of the flask is recorded and the sample is transferred to the lab for analysis. The sampling apparatus used to collect oxide of nitrogen samples is shown in Figure #7.

NO_2 ANALYSIS

The amount of nitrogen dioxide in the sample is determined by the phenoldisulphonic method. This method is as follows:

The sample is placed in a beaker and NaOH is slowly added until the solution is neutral or slightly basic by Litmus paper indication. This solution is then evaporated in the beaker used for neutralization. To the dry residue, two (2) milliliters of phenoldisulphonic acid are added and mixed to dampen all the precipitate. Then add two (2) milliliters of distilled water and mix thoroughly; add twenty (20) more milliliters of distilled water and mix. Add concentrated NH_4OH to this solution in excess of neutralization. Filter solution if necessary and transfer to a volumetric flask. Using a spectrophotometer at 420 Mu, compare results with a standard curve based on standard concentrations, and read milligrams of nitrogen in the sample.

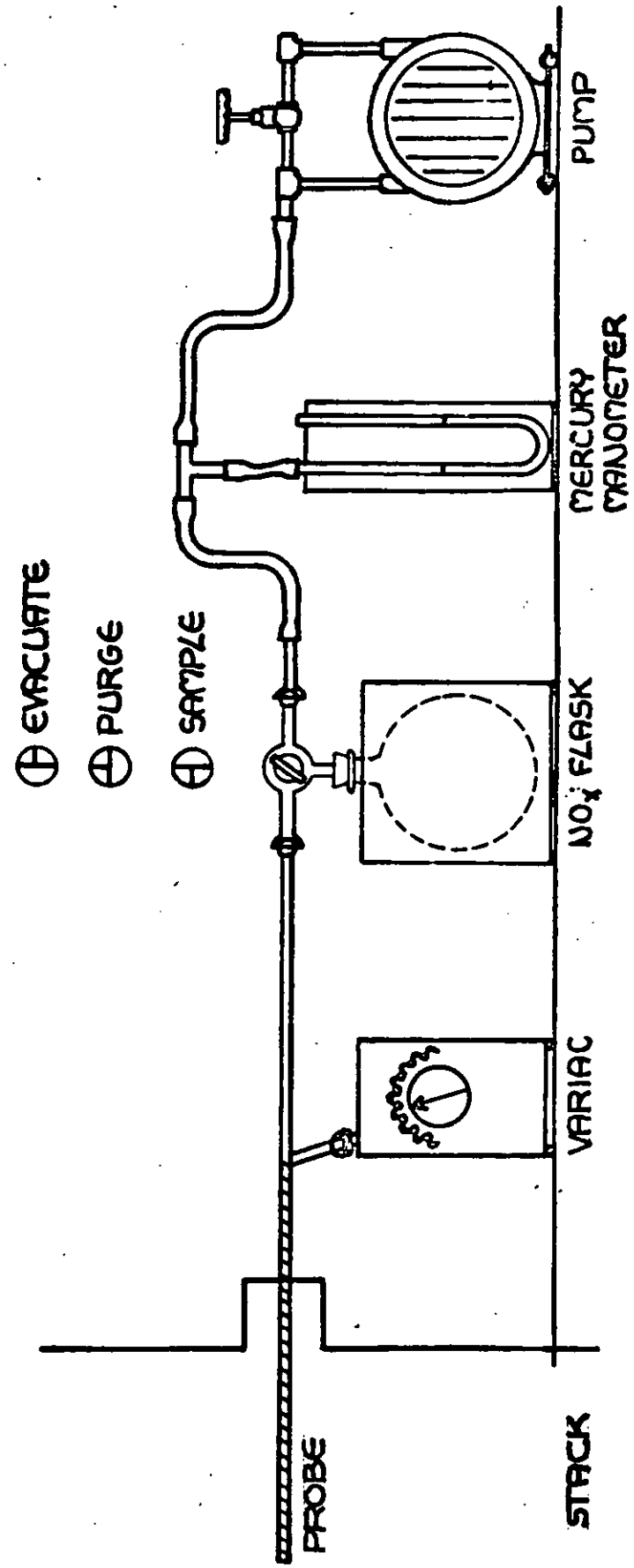

NO_x SAMPLING TRAIN

FIGURE #7.

OXIDES OF SULFUR SAMPLING (EPA Method No. 6)

The sulfur oxides sampling train consists of the following components arranged and illustrated schematically (See Figure #8): (1) glass wool filter, (2) an electrically heated glass probe, (3) variac, (4,5,6,7) four midget impingers, (8) ice bath, (9) drying tube containing silica gel, (10) vacuum gauge, (11) control valve, (12) vacuum pump, (13) dry gas meter, and (14) thermometer.

The probe is made of an 18" length of medium wall Pyrex tubing wound with 26 gauge nichrome heating wire. The front end of the probe includes a two-inch long area for insertion of glass wool to be used as a filtering device. The wire is connected to a variable transformer which allows the voltage and hence the heat input to be controlled. The wire is covered with a fiberglass insulation tape.

The probe connects to a coarse frit midget bubbler containing 15 ml of 80% isopropanol, and three midget impingers, the first two of which contained 15 ml of 3% H_2O_2 each with the third left dry, connected in series. The chamber near the bubbler outlet is stuffed with fine glass wool. An ice bath is provided for the bubbler and impingers. Attached to the outlet of the third impinger is a drying tube filled with silica gel of the indicator type. A bypass valve is provided for the leakless pump and a vacuum gauge and needle valve were installed at the inlet of the pump. The dry gas meter has a sensitivity of 0.001 cubic foot and is fitted with thermometers on the meter inlet and outlet.

SO_2, SO_3 ANALYSIS

The amount of sulfur dioxide and sulfur trioxide are measured as follows:

Dilute solution used for sampling to 50 ml. Pipette 10 ml. of this solution into a 125 ml. Erlenmeyer flask. Add 40 ml. of isopropanol and two to four drops of thorin indicator. Titrate to a pink endpoint using 0.01 N barium perchlorate. Run a blank with each series of samples.

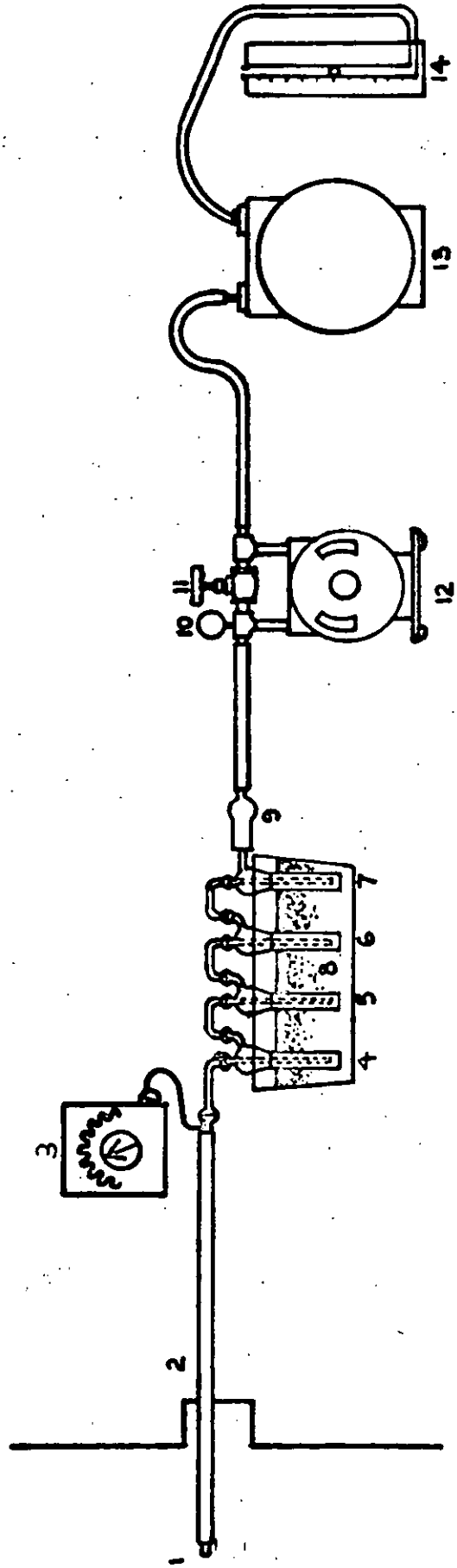

SO_x SAMPLING TRAIN

FIGURE #8

GASEOUS EMISSIONS CALCULATIONS

GENERAL EQUATIONS

A. Parts Per Million (ppm) by Volume Dry:

$$ppm = \frac{(48.15)(mg_{comp})(T_m + 460)}{(MW)(V_m)(P_m)}$$

$$ppm @ \underline{X}\% EA = ppm\ measured \times \frac{(Total\ Air @ meas'd.\ EA)}{(Total\ Air @ \underline{X}\% EA)}$$

Where: Total Air = 100 + EA (For O_2, equivalent Excess Air Used)

B. Pounds Per Hour (Lb./Hr.):

$$Lb./Hr. = \frac{(7.467 \times 10^{-6})(mg_{comp})(Q_s)(T_m + 460)}{(V_m)\ (P_m)}$$

Where:
- mg_{comp} = weight of component sampled (mg)
- T_m = Temperature of Meter (°F)
- MW = Molecular weight of Component
- V_m = Metered gas volume (ACF)
- P_m = Meter pressure (in. Hg absolute)
- Q_s = Stack gas flow (SCFMD)

SPECIFIC EQUATIONS

SO_2, Sulfur Dioxide (MW=64.1)

$$ppm = \frac{(.7512)(mg\ SO_2)(T_m + 460)}{(P_m)\ (V_m)}$$

SO_3, Sulfur Trioxide (MW=80.1)

$$ppm = \frac{(.6011)(mg\ SO_3)(T_m + 460)}{(P_m)\ (V_m)}$$

Hg, Mercury (MW=200.6)

$$ppm = \frac{(.2400)(mg\ Hg)(T_m + 460)}{(P_m)\ (V_m)}$$

F^-, Fluoride (MW=19.0)

$$ppm = \frac{(2.534)(mg\ F^-)(T_m + 460)}{(P_m)\ (V_m)}$$

Cl^-, Chloride (MW=35.5)

$$ppm = \frac{(1.356)(mg\ Cl^-)(T_m + 460)}{(P_m)\ (V_m)}$$

HCl, Hydrogen Chloride (MW=36.5)

$$ppm = \frac{(1.319)(mg\ HCl)(T_m + 460)}{(P_m)\ (V_m)}$$

NO_x, Oxides of Nitrogen as NO_2 (MW=46.0)

$$ppm = \frac{(1.047)(mg\ NO_2)(T_F + 460)}{(P_i - P_f)\ (V_F,\ CF)}$$

F denotes Flask
i denotes initial
f denotes final
V_F, CF = liters/28.32

ES 056-1/74

CO_2, O_2 and CO SAMPLING AND ANALYSIS

Samples were collected by traverse through a sampling tube attached to the particulate sampling probe and aspirated into leveling bottles as illustrated in Figure #9. The gas collected was immediately tested with an Orsat apparatus for CO_2, O_2 and CO concentration.

FLUE GAS COLLECTION BY LEVELING BOTTLE

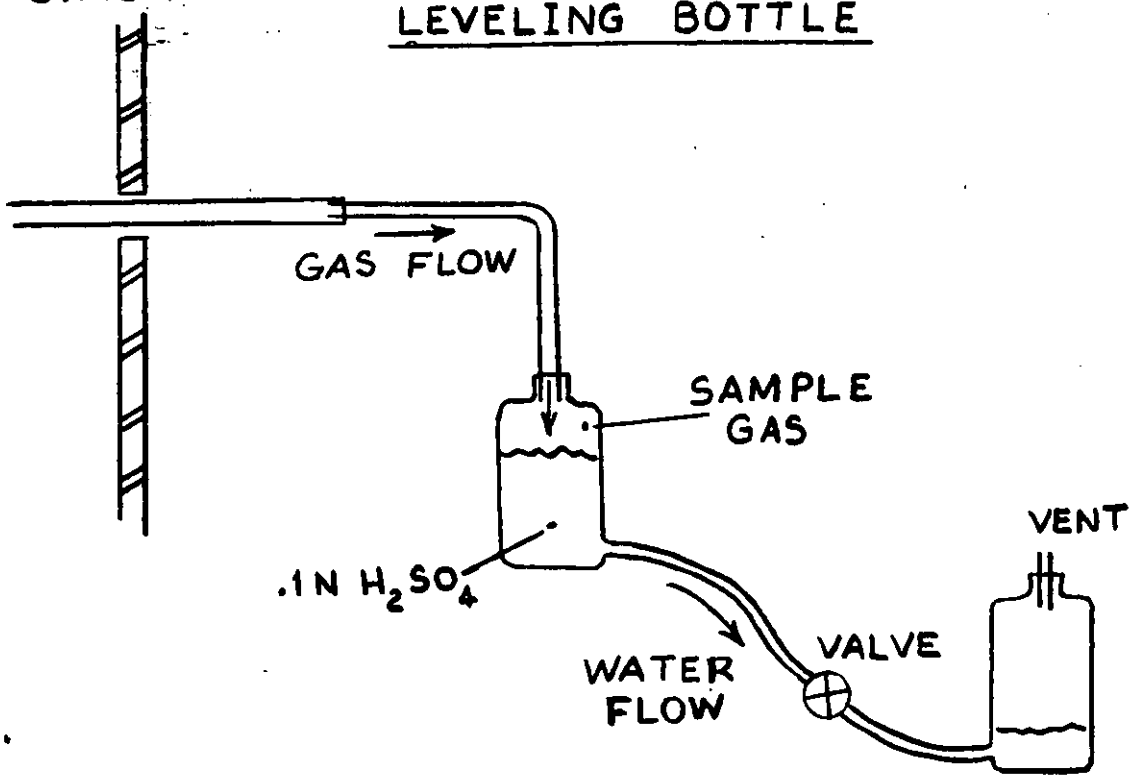

ORSAT SAMPLE ANALYSIS

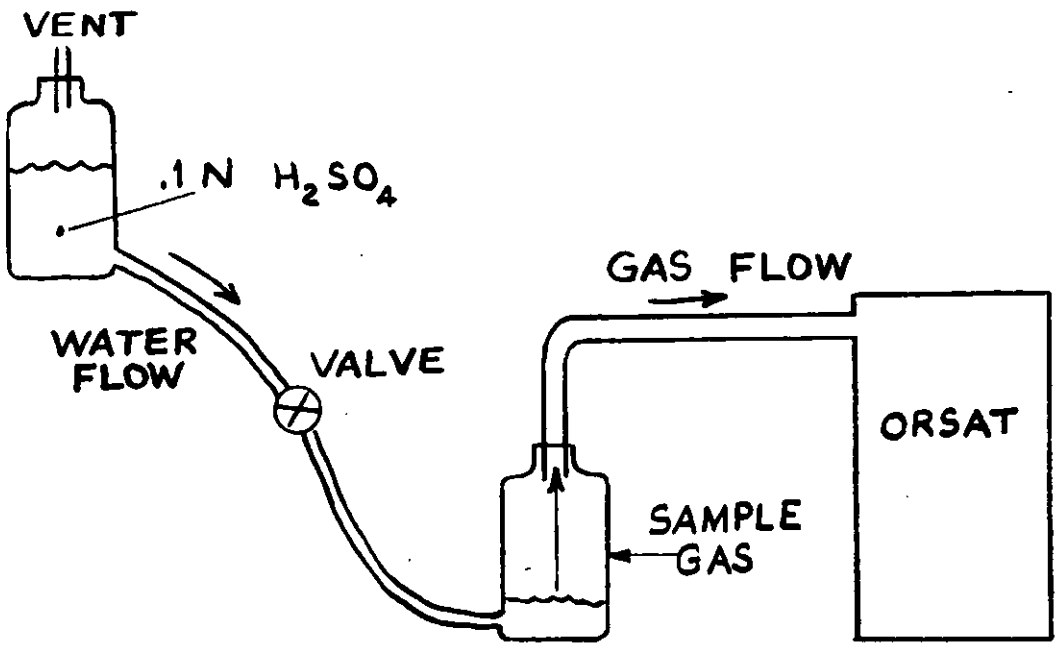

FIGURE # 9

TEST TEAM

Robert S. Epstein
Raymond Bennetts
John J. Jasko
Karl Boldt
James Federici

Prepared By:

John J. Jasko
Test Engineer

Reviewed By:

Robert S. Epstein
Project Director

Approved By:

Roy S. Egdall
Engineering Manager-Field Operations

IV. APPENDIX

REPORT NO. Y-8300 W PAGE OF PAGES

SOURCE TESTING CALCULATION FORMS

Test No. Y-8300W No. Runs 3

Name of Firm MSI

Location of Plant WILLIMANTIC, CT

Type of Plant SLUDGE INCINERATOR

Control Equipment SCRUBBER

Sampling Point Locations OUTLET

Pollutants Sampled PARTICULATE

Time of Particulate Test:

Run No. 1	Date 1/23/74	Begin 1450	End 1650
Run No. 2	Date 1/24/74	Begin 1137	End 1323
Run No. 3	Date 1/24/74	Begin 1520	End 1721

PARTICULATE EMISSION DATA

Run No.	1	2	3	
P_b barometric pressure, "Hg Absolute	29.87	30.27	30.28	
P_m orifice pressure drop, "H_2O	1.20	2.77	3.27	
V_m volume of dry gas sampled @ meter conditions, ft.^{3}	61.221	83.536	95.391	
T_m Average Gas Meter Temperature, °F	70.5	70.1	70.7	
V_m Volume of Dry Gas Sampled @ Standard std. conditions, ft.^{3}	61.193	90.087	97.101	
V_w Total H_2O collected, ml., Impingers & Silica Gel.	161.2	237.7	261.2	
V_w Volume of Water Vapor Collected gas ft.^{3} @ Standard Conditions*	7.64	11.27	12.38	

* 70°F, 29.92" Hg.

QUALITY CONTROLLED YORK RESEARCH CORPORATION

REPORT NO. Y-8300 W
1/23 1/24

Page of Pages

PARTICULATE EMISSION DATA (cont'd)

Run No.	1	2	3	
%M - % Moisture in the stack gas by volume	11.1	11.12	11.31	
M_d - Mole fraction of dry gas	.889	.889	.887	
% CO_2	3.8	2.8	2.8	
% O_2	14.4	14.8	14.8	
% N_2 CO	.2 81.6	.4 82.0	.4 82.0	
M W $_d$ - Molecular weight of dry stack gas	29.18	29.04	29.04	
M W - Molecular weight of stack gas	27.94	27.82	27.79	
Δ Ps - Velocity Head of stack gas, In. H_2O	—	—	—	
T_s - Stack Temperature, °F	[illegible]	[illegible]	[illegible]	
$\sqrt{\Delta P_s X (T_s+460)}$	[illegible]	[illegible]	[illegible]	
P_s - Stack Pressure, "Hg. Absolute °F .04	[illegible]	[illegible]	[illegible]	
V_s - Stack Velocity @ stack conditions, fpm	2273	2150	[illegible]	
A_s - Stack Area, in.^{2}	[illegible]	[illegible]	[illegible]	
Q_s - Stack Gas Volume @ Standard Conditions, *SCFM	5568	5473	5478	
T_t - Net Time of Test, min.	100	100	[illegible]	
D_n - Sampling Nozzle Diameter, in.	.250	.3125	.3125	
%I - Percent isokinetic	100.9	96.8	[illegible]	
m_f - Particulate - probe, cyclone and filter, mg.	172.8	284.0	308.2	
m_t - Particulate - total, mg.	—	—	—	
C_{an} - Particulate - probe, cyclone, and filter, gr/SCF	.0435	.0485	.0676	
C_{ao} - Particulate - total, gr/SCF	—	—	—	
C_{at} - Particulate - probe, cyclone, and filter gr/cf @ stack conditions	.0339	.0393	.0491	

REPORT NO. Y-8300 ω
1/23 - 1/24

Page of Pages

PARTICULATE EMISSION DATA (cont'd)

Run No.	1	2	3	
C_{au} - Particulate, total, gr/cf @ stack cond.	—	—	—	
C_{aw} - Particulate, probe, cyclone, and filter, lb/hr.	2.08	2.27	3.16	
C_{ax} - Particulate - total, lb/hr.	—	—	—	
%EA - % Excess air @ sampling point	203	247	247	

* 70°F. 29.92" Hg.

				STATE LIMIT
gr/SCF @ 12% CO_2	.137	.208	.264	.08
lb/ [illegible] FLUE GAS @ 50% EXCESS AIR	.155	.198	.252	.40
FEED RATE TONS/HR	1.73	1.82	3.10	

QUALITY CONTROLLED YORK RESEARCH CORPORATION

Y-8300 W

CO_2 = 3.8%
O_2 = 14.4%
CO = 0.2%

FIELD DATA

QUALITY CONTROLLED YORK RESEARCH CORPORATION

PLANT MSI
DATE 1/23/74
SAMPLING LOCATION SCRUBBER OUTLET
SAMPLE TYPE PART
RUN NUMBER 1
OPERATOR RSE JJ
AMBIENT TEMPERATURE 50
BAROMETRIC PRESSURE 29.87
STATIC PRESSURE, (P_s) -.20
FILTER NUMBER (s) FL 521

H_2O FINAL 344
INITIAL 200
144
SILICA GEL 17.2
161.2

PROBE LENGTH AND TYPE 5' GLASS
NOZZLE I.D. 1/4" .250
ASSUMED MOISTURE, % 15
SAMPLE BOX NUMBER A
METER BOX NUMBER 6-102
METER $\Delta H_@$ 1.81
C FACTOR .86
PROBE HEATER SETTING 250-300
HEATER BOX SETTING 250-300
REFERENCE Δp .60

SCHEMATIC OF TRAVERSE POINT LAYOUT

READ AND RECORD ALL DATA EVERY 5 MINUTES

TRAVERSE POINT NUMBER	SAMPLING TIME, min	CLOCK TIME (24-hr CLOCK)	GAS METER READING (V_m), ft^3	VELOCITY HEAD (Δp_s), in. H_2O	ORIFICE PRESSURE DIFFERENTIAL (ΔH), in. H_2O DESIRED	ORIFICE PRESSURE DIFFERENTIAL (ΔH), in. H_2O ACTUAL	STACK TEMPERATURE (T_s), °F	DRY GAS METER TEMPERATURE INLET ($T_{m\ in}$), °F	DRY GAS METER TEMPERATURE OUTLET ($T_{m\ out}$), °F	PUMP VACUUM, in. Hg	SAMPLE BOX TEMPERATURE, °F	IMPINGER TEMPERATURE, °F
START	0	1450	787.650									
A 1	5	1455	790.89	.43	[illegible]	1.35	140	63	63	<2	275	70
2	10	1500	794.13	.43	[illegible]	1.35	140	67	63			
3	15	1505	797.37	.45	1.40	1.40	140	70	64			
4	20	1510	800.66	.45	1.40	1.40	140	72	65			
5	25	1515	803.96	.46	1.45	1.45	140	72	67			
6	30	1520	807.32	.44	1.35	1.35	140	76	67			
7	35	1525	810.56	.34	1.25	1.25	140	75	67			
8	40	1530	813.67	.35	1.10	1.10	140	75	67			
9	45	1535	816.60	.33	1.05	1.05	145	78	68			
10	50	1540	819.453	.32	1.00	1.00	145	78	68			
START	50	1600	819.453	—	—	—	—	—	—	—	—	—
B 1	55	1605	822.24	.50	1.55	1.55	145	72	70	<2	275	70
2	60	1610	825.71	.47	1.45	1.45	145	82	72			
3	65	1615	829.07	.39	1.25	1.25	140	82	72			
4	70	1620	832.18	.37	1.15	1.15	140	85	74			
5	75	1625	835.17	.34	1.10	1.10	145	87	76			
6	80	1630	838.10	.33	1.05	1.05	145	87	77			
7	85	1635	840.55	.24	.78	.78	145	87	77			
8	90	1640	843.54	.37	1.15	1.15	145	89	79			
9	95	1645	846.29	.31	.97	.97	145	92	79			
10	100	1650	848.862	.27	.85	.85	145	92	79			

COMMENTS:

ES-041

$CO_2 = 28\%$
$O_2 = 14.8\%$
$CO = 0.4\%$

FIELD DATA

QUALITY CONTROLLED YORK RESEARCH CORPORATION

PLANT MST - WILLIMANTIC
DATE 1-24-74
SAMPLING LOCATION OUTLET
SAMPLE TYPE EPA-5 PART.
RUN NUMBER 2
OPERATOR [illegible]
AMBIENT TEMPERATURE 40
BAROMETRIC PRESSURE
STATIC PRESSURE, (P_s) -.20
FILTER NUMBER (s) FL 692

327
-200
127 ml. collected

PROBE LENGTH AND TYPE 5' GLASS
NOZZLE I.D. .3125
ASSUMED MOISTURE, % 12.0
SAMPLE BOX NUMBER A
METER BOX NUMBER 6-102
METER $\Delta H_@$ 1.81
C FACTOR .89
PROBE HEATER SETTING 250-300
HEATER BOX SETTING 250-300
REFERENCE Δp .24

SCHEMATIC OF TRAVERSE POINT LAYOUT

READ AND RECORD ALL DATA EVERY 5 MINUTES

TRAVERSE POINT NUMBER	SAMPLING TIME, min	CLOCK TIME (24-hr CLOCK)	GAS METER READING (V_m), ft^3	VELOCITY HEAD (Δp_s), in. H_2O	ORIFICE PRESSURE DIFFERENTIAL (ΔH), in. H_2O DESIRED	ACTUAL	STACK TEMPERATURE (T_s), °F	DRY GAS METER TEMPERATURE INLET ($T_{m\,in}$), °F	OUTLET ($T_{m\,out}$), °F	PUMP VACUUM, in. Hg	SAMPLE BOX TEMPERATURE, °F	IMPINGER TEMPERATURE, °F
START	0	1137	854.28									
A 1	5	1142	859.81	.43	3.20	3.20	120	52	50	3	250-300	<70°
2	10	1147	864.51	.41	3.15	3.15	125	68	53	3		
3	15	1152	869.23	.45	3.45	3.40	120	70	54	3		
4	20	1157	874.51	.44	3.40	3.40	120	73	54	3		
5	25	1202	878.11	.43	3.30	3.30	120	75	56	3		
6	30	1207	[illegible]	.41	3.15	3.15	120	77	57	3		
7	35	1212	[illegible]	.37	3.00	3.00	115	80	60	3		
8	40	1217	892.74	.35	2.70	2.70	115	82	61	3		
9	45	1222	895.64	.31	2.40	2.40	110	85	63	3		
10	50	1227	900.28	.28	2.20	2.20	110	83	63	3		
START	60	1233	900.28									
B 1	55	1238	905.46	.41	3.15	3.15	125	75	64	4		
2	60	1243	910.17	.43	3.30	3.30	135	77	64	6		
3	65	1248	914.20	.35	2.70	2.70	145	85	64	6		
4	70	1253	917.11	.33	2.50	2.50	145	85	64	6		
5	75	1258	923.13	.34	2.60	2.60	145	84	66	7		
6	80	1303	927.26	.29	2.30	2.30	145	85	67	6		
7	85	1308	931.51	.22	2.30	2.30	140	85	67	8		
8	90	1313	935.69	.33	2.50	2.50	130	85	67	8		
9	95	1318	939.85	.31	2.20	2.20	135	85	67	8		
10	100	1323	943.004	.26	2.00	2.00	130	83	68	7		

COMMENTS:

ES-041

Y-8300 W

$CO_2 = 2.8\%$
$O_2 = 14.8\%$
$CO = 0.4\%$

FIELD DATA

QUALITY CONTROLLED YORK RESEARCH CORPORATION

PLANT MSI
DATE 1/23/74
SAMPLING LOCATION SCRUBBER OUTLET
SAMPLE TYPE PART
RUN NUMBER 3
OPERATOR RSE JJ
AMBIENT TEMPERATURE 40
BAROMETRIC PRESSURE 30.28
STATIC PRESSURE, (P_s) -.20
FILTER NUMBER (s) FL734, FL649

FINAL H_2O 422
INITIAL 200
222
SILICA GEL 39.2
261.2

PROBE LENGTH AND TYPE 5' GLASS
NOZZLE I.D. 5/16"
ASSUMED MOISTURE, % 12
SAMPLE BOX NUMBER A
METER BOX NUMBER 6-102
METER $\Delta H_@$ 1.81
C FACTOR .89
PROBE HEATER SETTING 250-300
HEATER BOX SETTING 250-300
REFERENCE Δp .24

SCHEMATIC OF TRAVERSE POINT LAYOUT

READ AND RECORD ALL DATA EVERY 5 MINUTES

TRAVERSE POINT NUMBER	SAMPLING TIME, min	CLOCK TIME (24-hr CLOCK)	GAS METER READING (V_m), ft^3	VELOCITY HEAD (Δp_s), in. H_2O	ORIFICE PRESSURE DIFFERENTIAL (ΔH), in. H_2O DESIRED	ORIFICE PRESSURE DIFFERENTIAL (ΔH), in. H_2O ACTUAL	STACK TEMPERATURE (T_s), °F	DRY GAS METER TEMPERATURE INLET ($T_{m\ in}$), °F	DRY GAS METER TEMPERATURE OUTLET ($T_{m\ out}$), °F	PUMP VACUUM, in. Hg	SAMPLE BOX TEMPERATURE, °F	IMPINGER TEMPERATURE, °F
START	0	1520	943.987									
B1	5	1525	948.86	.45	3.40	3.20	140	44	44	19	275	70
2	10	1530	952.73	.45	3.40	3.00	145	62	48	19		
3	15	1535	957.88	.45	3.40	2.50	145	65	48	19		
4	20	1550-1555	961.97	.42	3.20	3.20	140	68	52	7		
5	25	1600	965.68	.38	2.85	2.85	140	72	54	6		
6	30	1605	969.30	.38	2.85	2.85	135	78	59	6		
7	35	1610	973.89	.35	2.65	2.65	130	82	59	6		
8	40	1615	977.60	.35	2.65	2.65	130	84	61	6		
9	45	1620	982.00	.33	2.50	2.50	130	85	63	6		
10	50	1625	986.266	.30	2.25	2.25	130	85	63	5		
START	50	1631	986.266	–	–	–	–	–	–	–		
A1	55	1636	991.86	.50	3.75	3.75	135	72	63	8		
2	60	1641	997.41	.50	3.75	3.75	135	75	63	8		
3	65	1646	1003.20	.55	4.15	4.15	135	86	63	12		
4	70	1651	1009.00	.55	4.15	4.15	135	90	65	12		
5	75	1656	1014.45	.52	3.85	3.85	135	94	68	12		
6	80	1701	1019.77	.49	3.65	3.65	135	95	69	12		
7	85	1706	1024.16	.49	3.65	3.65	140	95	67	12		
8	90	1711	1029.50	.48	3.60	3.60	140	95	67	14		
9	95	1716	1034.60	.45	3.40	3.40	135	95	67	15		
10	100	1721	1039.378	.43	3.25	3.25	135	95	67	18		

COMMENTS:

ES-041

REPORT NO. Y-8300W

PAGE

SO_2, SO_3 EMISSION DATA

Client M.S.I. Industries Inc.

Plant Location Willimantic, Conn.

Unit Tested Sewage Sludge Incinerator

Load

Run Number	1A	1B	2A	2b	3A	3b
Date	1/23	1/23	1/24	1/24	1/24	1/24
mg SO_2 Collected	5.13	10.90	6.57	7.21	5.93	4.17
ppm SO_2 by Volume Dry	34.4	79.6	48.1	53.5	47.5	31.2
Stack Flow (SCFMD)	5568	5568	5473	5473	5978	5978
Lb./Hr. SO_2	1.90	4.41	2.62	2.91	2.83	1.86
MMBTU/Hr. Heat Input	–	–	–	–	–	–
Lb./MMBTU SO_2	–	–	–	–	–	–
% O_2	–	–	–	–	–	–
ppm SO_2 @ % O_2	–	–	–	–	–	–
% Excess Air	–	–	–	–	–	–
ppm SO_2 @ % Excess Air	–	–	–	–	–	–
mg SO_3 Collected	4.32	3.68	1.92	1.44	2.40	4.10
ppm SO_3 by Volume Dry	23.2	21.5	11.25	8.55	15.4	24.6
Lb./Hr. SO_3	1.60	1.49	.765	.581	1.14	1.82
Lb./MMBTU SO_3	–	–	–	–	–	–
ppm SO_3 @ % O_2	–	–	–	–	–	–
ppm SO_3 @ % Excess Air	–	–	–	–	–	–

ES-057-1/74

QUALITY CONTROLLED YORK RESEARCH CORPORATION

REPORT NO. Y-8300W

PAGE

OXIDES OF NITROGEN EMISSIONS

Client M.S.I. Industries Inc.

Plant Location Willimantic, Conn.

Unit Tested Sewage Sludge Incinerator

Load

Run Number	1A	1b	1c	2A	2b	2c
Date	1/23	1/23	1/23	1/24	1/24	1/24
Mg. NO_2 Collected	.159	.046	.106	.091	.106	.136
PPM as NO_2 by Volume Dry	51.5	13.3	30.5	27.2	33.5	46.5
Stack Flow (SCFMD)	5568	5568	5568	5473	5473	5473
Lb/Hr. as NO_2	—	—	—	—	—	—
MMBTU/Hr. Heat Input	—	—	—	—	—	—
Lb/MMBTU as NO_2	—	—	—	—	—	—
% O_2	—	—	—	—	—	—
PPM as NO_2 @ _____ %O_2	—	—	—	—	—	—
% Excess Air	—	—	—	—	—	—
PPM as NO_2 @ _____ % Excess Air	—	—	—	—	—	—

ES-058

QUALITY CONTROLLED YORK RESEARCH CORPORATION

REPORT NO. Y-8300W

PAGE

OXIDES OF NITROGEN EMISSIONS

Client MSI INDUSTRIES INC

Plant Location WILLIMANTIC, CONN.

Unit Tested SEWAGE SLUDGE INCINERATOR

Load —

Run Number	3a	3b	3c			
Date	1/24	1/24	1/24			
Mg. NO_2 Collected	.121	.095	.114			
PPM as NO_2 by Volume Dry	35.6	26.2	40.0			
Stack Flow (SCFMD)	5978	5978	5978			
Lb/Hr. as NO_2	1.52	1.12	1.71			
MMBTU/Hr. Heat Input	—	—	—			
Lb/MMBTU as NO_2	—	—	—			
% O_2	—	—	—			
PPM as NO_2 @ _____ %O_2	—	—	—			
% Excess Air	—	—	—			
PPM as NO_2 @ _____ % Excess Air	—	—	—			

QUALITY CONTROLLED YORK RESEARCH CORPORATION

HYDROCARBON EMISSION DATA

Job No. Y-8300W

Date 1-23-74 (TEST 1a), 1-24-74 (TEST 2a-3c)

Plant WILLIMANTIC STP Location OUTLET

Ambient Temp. 50

Operator J.F

Test No.	Time	Flask Temp.	CONCENTRATION
1a	1502	300	10.29 ppm
2a	1205	300	3.94
2b	1300	300	32.7
2c	1545	300	2.0
3b	1607	300	1.1
3c	1650	300	1.2

OXIDES OF NITROGEN FIELD DATA

Job No. Y-8300W

Client MSI INDUSTRIES

Plant Location WILLIMANTIC, CONN

Unit No. SCRUBBER

Sampling Location OUTLET

Operator KE

Run Number	1a	1b	1c	2a	2b	2c
Date	1/23	1/23	1/23	1/24	1/24	1/24
Flask Number	7	5	1	18	10	44
Flask Volume Corrected (liters) (V_f)	2.045	2.041	2.028	2.015	2.040	2.052
Initial Flask Vacuum (in.Hg) (Pi)	27.0	27.0	27.0	27.3	27.3	27.1
Final Flask Vacuum (in.Hg) (Pf	3.7	0.2	0.7	2.7	4.3	5.2
Flask Temperature (T_f)	60	60	60	~~44~~	~~44~~	44
% O_2	14.4	14.4	14.4	14.8	14.8	14.8

QUALITY CONTROLLED YORK RESEARCH CORPORATION

OXIDES OF NITROGEN FIELD DATA

Job No. Y-8300W

Client MSI INDUSTRIES

Plant Location WILLIMANTIC CONN.

Unit No. SCRUBBER

Sampling Location OUTLET

Operator KS

Run Number	2a	2b	2c			
Date	1/24	1/24	1/24			
Flask Number	7	1	5			
Flask Volume Corrected (liters) (V_f)	[illegible]	[illegible]	2.041			
Initial Flask Vacuum (in.Hg) (Pi)	27.2	27.2	27.2			
Final Flask Vacuum (in.Hg) (P_f	0.5	0.5	0.5			
Flask Temperature (T_f)	41	41	41			
% O_2	14.8	14.8	14.8			

ES-054

QUALITY CONTROLLED YORK RESEARCH CORPORATION

GAS SAMPLING FIELD DATA

JOB NO. Y-8300W

Material Sampled for SOx

Date 1-23-74

Plant WILLIMANTIC Location OUTLET

Bar. Pressure 29.87 "Hg Comments:

Ambient Temp. 60

Run No. 1A

Power Stat Setting 80%

Filter Used: Yes ____ No X

Operator KB

CLOCK TIME	METER (Ft^3)	FLOW METER SETTING (CFM)	METER TEMPERATURE TM
1404	441.260	.1	60
1410	481.310	.1	60
1415	482.335	.1	60
1420	482.650	.1	60
1425	[illegible]	.1	60

Comments:

Impinger Bucket No. ____

Meter Box No. ____

NCAP 36 (12/67)

GAS SAMPLING FIELD DATA

JOB NO. Y-8300W

Material Sampled for SOx

Date 1-22-74

Plant WILLIMANTIC Location OUTLET

Bar. Pressure 29.87 "Hg Comments:

Ambient Temp. 63

Run No. 1b

Power Stat Setting 80%

Filter Used: Yes ____ No X

Operator KB

CLOCK TIME	METER (Ft^3)	FLOW METER SETTING (CFM)	METER TEMPERATURE TM
1529	489.300	.1	63
1535	489.85	.1	63
1540	490.26	.1	63
1545	490.63	.1	63
1550	491.100	.1	63

Comments:

Impinger Bucket No. _____

Meter Box No. _____

NCAP 36 (12/67)

GAS SAMPLING FIELD DATA

JOB NO. Y-8300W

Material Sampled for SOx

Date 1-24-74

Plant WILLIMANTIC Location OUTLET

Bar. Pressure 30.27 "Hg Comments:

Ambient Temp. 45

Run No. 2a

Power Stat Setting 80%

Filter Used: Yes ____ No X

Operator KB

CLOCK TIME	METER (Ft^3)	FLOW METER SETTING (CFM)	METER TEMPERATURE TM
1101	496.700	.05	42
1105	496.95	[illegible]	42
1111	497.415	.05	42
1115	497.[illegible]	.05	42
1121	497.94	.05	42
1125	498.145	.05	42
1130	498.400	.05	42

Comments:

Impinger Bucket No. ____

Meter Box No. ____

NCAP 36 (12/67)

GAS SAMPLING FIELD DATA

JOB NO. Y-8300w

Material Sampled for SOx

Date 1-24-74

Plant WILLIMANTIC Location OUTLET

Bar. Pressure 30.27 "Hg Comments:

Ambient Temp. 43°

Run No. 2b

Power Stat Setting 80%

Filter Used: Yes ____ No X

Operator KB

CLOCK TIME	METER (Ft^3)	FLOW METER SETTING (CFM)	METER TEMPERATURE TM
1341	499.600	.05	41
1350	404.755	.05	41
[illegible]	[illegible].14	[illegible]	41
1402	500.40	.05	41
1409	[illegible].57	.05	41
1414	501.675	.05	41

Comments:

Impinger Bucket No. ____

Meter Box No. ____

NCAP 36 (12/67)

GAS SAMPLING FIELD DATA

JOB NO. Y-8300W

Material Sampled for SOx

Date 1-24-74

Plant WILLIMANTIC Location OUTLET

Bar. Pressure 30.28 "Hg Comments:

Ambient Temp. 40

Run No. 3a

Power Stat Setting 80%

Filter Used: Yes ____ No X

Operator KB

CLOCK TIME	METER (Ft^3)	FLOW METER SETTING (CFM)	METER TEMPERATURE TM
1518	504.875	.06	41
1525	505.25	.05	41
1532	505.58	.05	41
1546	505.24	.05	41
1551	506.425	.05	41

Comments:

Impinger Bucket No. ____

Meter Box No. ____

NCAP 36 (12/67)

GAS SAMPLING FIELD DATA

JOB NO. Y-8300W

Material Sampled for SOx

Date 1-24-74

Plant WILLIMANTIC Location OUTLET

Bar. Pressure 30.28 "Hg Comments:

Ambient Temp. 41

Run No. 36

Power Stat Setting 80%

Filter Used: Yes ____ No ✓

Operator KS

CLOCK TIME	METER (Ft^3)	FLOW METER SETTING (CFM)	METER TEMPERATURE TM
1640	508.100	.07	41
1645	508.12	.06	41
1650	509.02	.06	41
1700	509.215	.06	41
1705	509.700	.06	41

Comments:

Impinger Bucket No. ____

Meter Box No. ____

NCAP 36 (12/67)

STATE OF CONNECTICUT
DEPARTMENT OF ENVIRONMENTAL PROTECTION
STATE OFFICE BUILDING HARTFORD, CONNECTICUT 06115

October 4, 1973

Mr. Robert Epstein
York Research Corporation
One Research Drive
Stamford, Connecticut 06906

Dear Mr. Epstein:

You are hereby notified that "Intent to Test" form No. 730082 which describes a test plan for sampling emissions from the sludge incinerator at the Willimantic Wastewater Treatment Plant, Willimantic, Connecticut, is acceptable and meets the test criteria required by the State of Connecticut, Department of Environmental Protection.

The field tests will be observed by Mr. Carl Dodge unless you are otherwise notified. He should be informed of progress and problems that may alter the test program.

Very truly yours,

Terrence DellaVecchia
Air Pollution Engineer

TD:kr
cc: Mr. John Carpenter
MSI Industries, Inc.

This paper was produced from recycled paper - both broke and reused.

Date 7/16/74 Box No. [illegible]

Pump OK

Pump Oil OK

Clean Quick Connects OK Valves OK

Manometers OK

Dry Test Meter OK

Thermometers OK

Lights OK

Electrical Check - Amphenol OK

Variac OK

Vacuum Gauge OK

Leak Check at 27" hg. - OK CFM

Remarks

Call Cpgrmt Charles M Eber

Initial each item when checked and write in any remarks.

Calibration - Orifice and Meter

Date JAN 16/74 Box No. 6-102 P_b 29.84

Man Orifice	CF_w	CF_d	T_W	IT_d	OT_d	T_d Avg.	Time t
0.5	5	5.016	72	77.6	72.4	75	12.91
1.0	5	5.042	73	84.6	77.2	80.9	9.48
2.0	10	10.095	73	89.5	79.5	84.5	12.73
4.0	10	10.104	73	96	81.5	87.3	9.26
6.0	10	10.042	73	98.5	83.5	91.0	7.56
8.0	10						

Calculate Y & $H_@$ at man. 2.0

$$Y = \frac{CF_w P_b \ (T_d \text{ avg.} + 460)}{CF_d \ (P_b + 0.147)(T_w + 460)}$$

$$Y = \frac{(\quad + 460)}{(\quad + 0.147)(\quad + 460)}$$

$$\Delta H_@ = \frac{0.0634}{P_b (OT_d + 460)} \left(\frac{(T_w + 460)t}{CF_w} \right)^2$$

$$\Delta H_@ = \frac{0.0634}{(\quad + 460)} \left((\quad + 460)t \right)^2$$

Tolerances

Y = 0.99 - 1.00 - 1.01

$\Delta H_@$ = 1.6 - 1.84 - 2.1

			Man.	H@
$\Delta H_@$ =	0.317 (Man. Orifice) / P_b (OT_d + 460)	$\left(\frac{(T_w + 460)t}{CF_w}\right)^2$		
$\Delta H_@$ =	0.01585 / ___ (___ + 460)	$\left(\frac{(72 + 460)\ 12.91}{5}\right)^2$	.5	1.88
$\Delta H_@$ =	0.0317 / ___ (___ + 460)	$\left(\frac{(73 + 460)\ 9.48}{5}\right)^2$	1.0	2.02
$\Delta H_@$ =	0.0634 / ___ (___ + 460)	$\left(\frac{(73 + 460)\ 12.73}{10}\right)^2$	2.0	1.89
$\Delta H_@$ =	0.1268 / ___ (___ + 460)	$\left(\frac{(73 + 460)\ 9.26}{10}\right)^2$	4.0	1.91
$\Delta H_@$ =	0.1902 / ___ (___ + 460)	$\left(\frac{(73 + 460\ 7.56}{10}\right)^2$	6.0	1.90
$\Delta H_@$ =	0.2536 /	$\left(\frac{(\_\_\_ + 460)}{\_\_\_}\right)^2$	8.0	

Calibration Calculations Meter and Pump Box

Date JAN 16 74 Box No. 6-102

	Man.	Y
$Y = \frac{CF_w\ P_b\ (T_d \text{ avg.} + 460)}{CF_d\ P_b + \frac{\text{Man. Orifice}}{13.6}\ (T_w + 460)}$		
$Y = \frac{5 \times 29.84 (75 + 460)}{5.016\ (29.84 + 0.0368)(72 + 460)}$	.5	1.00
$Y = \frac{5 \times 29.84 (80.9 + 460)}{5.042 (29.84 + 0.0737)(73 + 460)}$	1.0	1.00
$Y = \frac{10 \times 29.84 (84.5 + 460)}{10.095 (29.84 + 0.147)(73 + 460)}$	2.0	1.01
$Y = \frac{10 \times 29.84 (87.3 + 460)}{10.104 (29.84 + 0.294)(73 + 460)}$	4.0	1.01
$Y = \frac{10 \times 29.84 (91 + 460)}{10.042 (29.84 + 0.431)(73 + 460)}$	6.0	1.01
$Y = \frac{\_\_\_ \times \_\_\_ (\_\_\_ + 460)}{\_\_\_ (\_\_\_ + 0.588)(\_\_\_ + 460)}$	8.0	