Note: This is a reference cited in *AP 42, Compilation of Air Pollutant Emission Factors, Volume I Stationary Point and Area Sources.* AP42 is located on the EPA web site at www.epa.gov/ttn/chief/ap42/

The file name refers to the reference number, the AP42 chapter and section. The file name "ref02_c01s02.pdf" would mean the reference is from AP42 chapter 1 section 2. The reference may be from a previous version of the section and no longer cited. The primary source should always be checked.

AP-42 Section Number: 1.8

Reference Number: 24

Title: Source Test Report Number 5 Boiler Impingement Wet Scrubber Particulate Emissions: Sugar Cane Growers Cooperative of Florida

December 1990

SOURCE TEST REPORT
NUMBER 5 BOILER
IMPINGEMENT WET SCRUBBERS
PARTICULATE EMISSIONS
SUGAR CANE GROWERS COOPERATIVE OF FLORIDA
BELLE GLADE, FLORIDA

DECEMBER 5, 1990

PREPARED FOR:
SUGAR CANE GROWERS COOPERATIVE OF FLORIDA
BELLE GLADE, FLORIDA

PREPARED BY:
AIR CONSULTING and ENGINEERING, INC.
2106 N.W. 67th PLACE
SUITE 4
GAINESVILLE, FLORIDA
32607
14642 FLAMINGO DRIVE
WEST PALM BEACH, FLORIDA
33470

TABLE OF CONTENTS

SECTION		PAGE
1.0	INTRODUCTION	1
2.0	SUMMARY AND DISCUSSION OF RESULTS	2
3.0	PROCESS DESCRIPTION AND OPERATION	4
4.0	SAMPLING POINT LOCATION	5
5.0	FIELD AND ANALYTICAL PROCEDURES	7

APPENDICES

APPENDIX A--COMPLETE EMISSION DATA AND SAMPLE CALCULATIONS

APPENDIX B--FIELD DATA SHEETS

APPENDIX C--LABORATORY ANALYSES

APPENDIX D--QUALITY ASSURANCE AND CHAIN OF CUSTODY

APPENDIX E--PRODUCTION RATE CERTIFICATION

APPENDIX F--PROJECT PARTICIPANTS

LIST OF TABLES

TABLE
---

1 SUMMARY OF PARTICULATE MATTER EMISSIONS.....3

LIST OF FIGURES

FIGURE
---

1 SAMPLING POINT LOCATION.....6

2 EPA 5 SAMPLING TRAIN.....8

Air Consulting and Engineering, Inc.

REPORT CERTIFICATION

To the best of my knowledge, all applicable field and analytical procedures comply with Florida Department of Environmental Regulation requirements and all test data and plant operating data are true and correct.

Stephen L. Neck

Stephen L. Neck, P.E.

State of Florida
Registration No. 20020

January 3, 1991

Date

SEAL

2106 N.W. 67th Place, Suite 4 • Gainesville, Florida 32606 • (904) 335-1889

1.0 INTRODUCTION

Personnel from Air Consulting and Engineering,INC.(ACEI) performed annual source emission compliance testing for the Sugar Cane Growers Cooperative of Florida(SCGCOF) on December 5, 1990. Testing was performed at the Number 5 Boiler dual wet scrubber outlets.

Testing was designed to fulfill "specific conditions" of the current Florida Department of Environmental Regulation (FDER) operating permit.

Three United States Environmental Protection Agency (USEPA) Method 5 particulate matter (PM) test runs were conducted while the plant was documented to be operating within 10% of permitted production.

Mr. Blas Marin of SCGCOF served as test coordinator and certified production rates.

Messrs. Ajaya K. Satyal and Jeff Koerner of the Palm Beach County HRS witnessed a portion of the testing.

2.0 SUMMARY and DISCUSSION of RESULTS

Results of the emission testing are provided in Table 1. Complete emission data are located in the report appendices.

The source was found to be operating within full compliance of permit conditions. Stack emissions averaged 54.95 pounds per hour (LB/HR) and 0.189 pounds per million btu(LB/MMBTU) heat input against a "process rate" basis allowable emission of 0.238 LB/MMBTU. Permit conditions limit emissions to 0.10 LB/MMBTU from oil and 0.25 LB/MMBTU from residue firing.

Production rate summaries are provided in Appendix A. These data were taken from control room recordings of steam flow,temperature,and pressure as well as feedwater temperature and pressure(Appendix E). Residue integrator and oil meter readings were recorded at the beginning and end of each particulate test run by ACEI personnel.

TABLE 1
EMISSION SUMMARY
SUGAR GROWERS COOPERATIVE OF FLORIDA
NUMBER 5 BOILER
DECEMBER 5, 1990

RUN NUMBER	TIME	ACTUAL EMISSIONS		ALLOWABLE EMISSIONS	
		LB/HR	LB/MMBTU	LB/HR	LB/MMBTU
1	0744-0932 108	55.62	0.188	70.92	0.240
2	0956-1144 108	59.69	0.204	69.08	0.236
3	1213-1413 112	49.53	0.176	66.56	0.237
AVERAGES	--------- 112	54.95	0.189	68.85	0.238

3.0 PROCESS DESCRIPTION AND OPERATION

The Number 5 Boiler at Sugar Cane Growers Cooperative is a spreader stoker design used primarily for residue fuel firing. Supplemental oil firing was also utilized for the emission test. The boiler averaged 170,277 pounds per hour steam production over the three run test period.

Oil meters, steam integrators, and other production monitoring devices were rigorously calibrated prior to the production season.

4.0 SAMPLING POINT LOCATION

The sampling point location consists of dual scrubber outlet stacks, each 64" in diameter. Each stack has two sample ports 90 degrees apart. The ports on the both stacks are located 165" from an upstream disturbance and 64" from the outlet.

Twenty-four test points were sampled on each stack for each test run. The traverse were located as shown in Figure 1. The stack configuration is such that there is no reason to evaluate the presence of cyclonic flow.

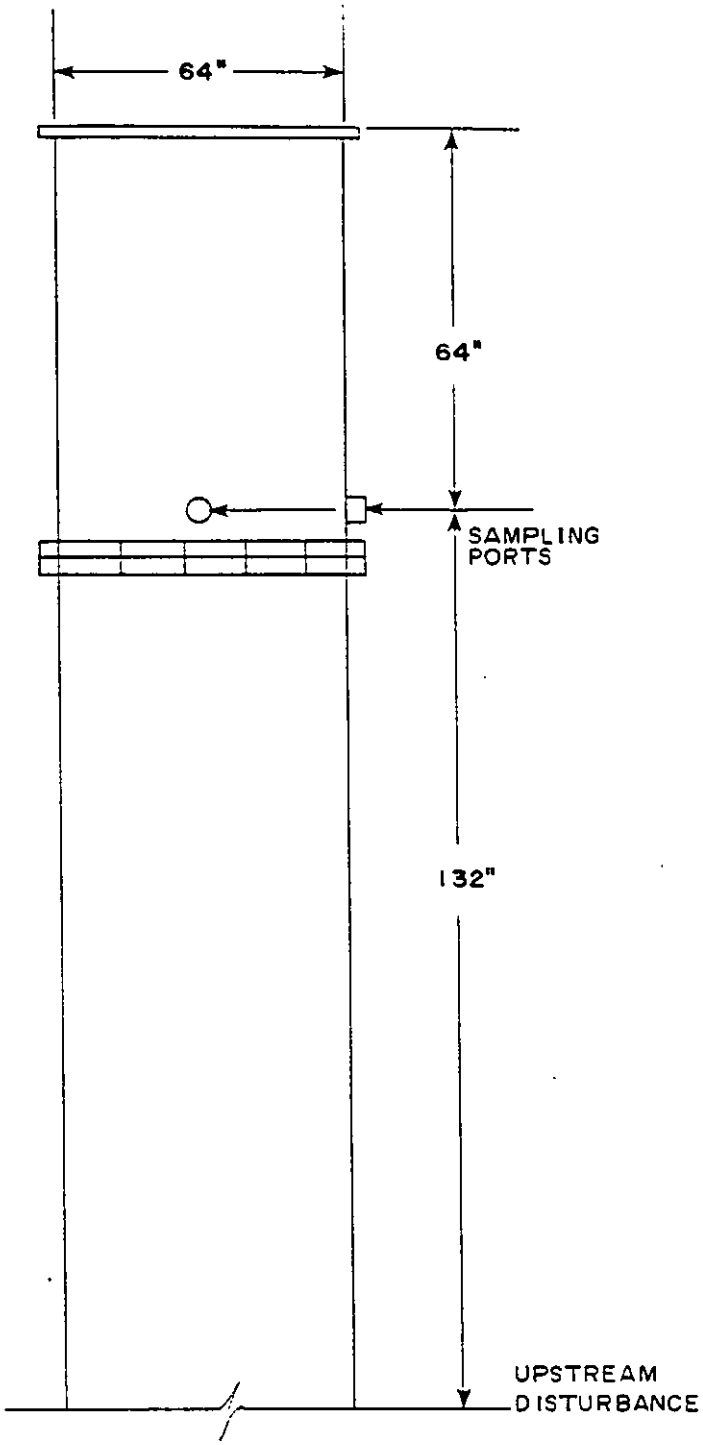

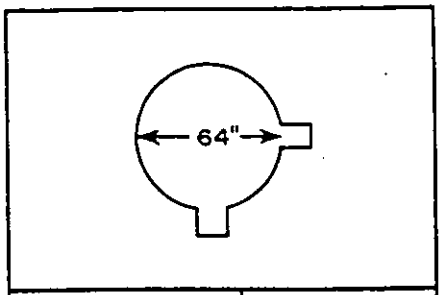

TRAVERSE POINT NUMBER	INCHES INSIDE STACK WALL
1	1.4
2	4.3
3	7.6
4	11.3
5	16.0
6	22.8
7	41.2
8	48.0
9	52.7
10	56.4
11	59.7
12	62.6

NOTE: NOT TO SCALE

BOTH STACKS ARE IDENTICAL.

FIGURE 1.
SAMPLING POINT LOCATION
BOILER NO. 5
SUGARCANE GROWERS COOP. OF FLORIDA

AIR CONSULTING and ENGINEERING

5.0 FIELD and ANALYTICAL PROCEDURES- USEPA METHOD 5

Particulate matter samples were collected by the emission measurement method specified by the United States Environmental Protection Agency. A schematic diagram of the sampling train used is provided in Figure 2. All particulate matter captured from the nozzle to and including the filter was included in the calculation of the emission rate of particulate matter.

PREPARATION OF EQUIPMENT

1. FILTERS- Gelman type "A" glass fiber filters were placed in a drying oven for two hours at 105 degrees C, removed and placed in a standard desiccator containing indicating silica gel, allowed to cool for two hours, and weighed to the nearest 0.1 mg. The filters were then re-desiccated for a minimum of six hours and weighed to a constant weight (less than 0.5 mg change from previous weighing). The average of the two constant weights was used as the tare value.

2. NOZZLE, FILTER HOLDER, AND SAMPLING PROBE - The nozzle, filter holder, and sampling probe were washed vigorously with soapy water and brushes, rinsed with distilled water and acetone, and dried pror to the test program. All openings on the equipment were sealed while in transit to the test site.

3. IMPINGERS - The Greenburg-Smith impingers were cleaned, rinsed, and dried as in 2. The impingers were also sealed during transit.

TEST PROCEDURE

Prior to performing the actual particulate matter sample runs, certain stack and stack gas parameters were measured. These preliminary measurements included the average gas temperature, the stack gas velocity head, the stack gas moisture content, and the dimensions at the point where the tests were to be performed. The stack temperature was determined using a bi-metallic thermocouple and calibrated

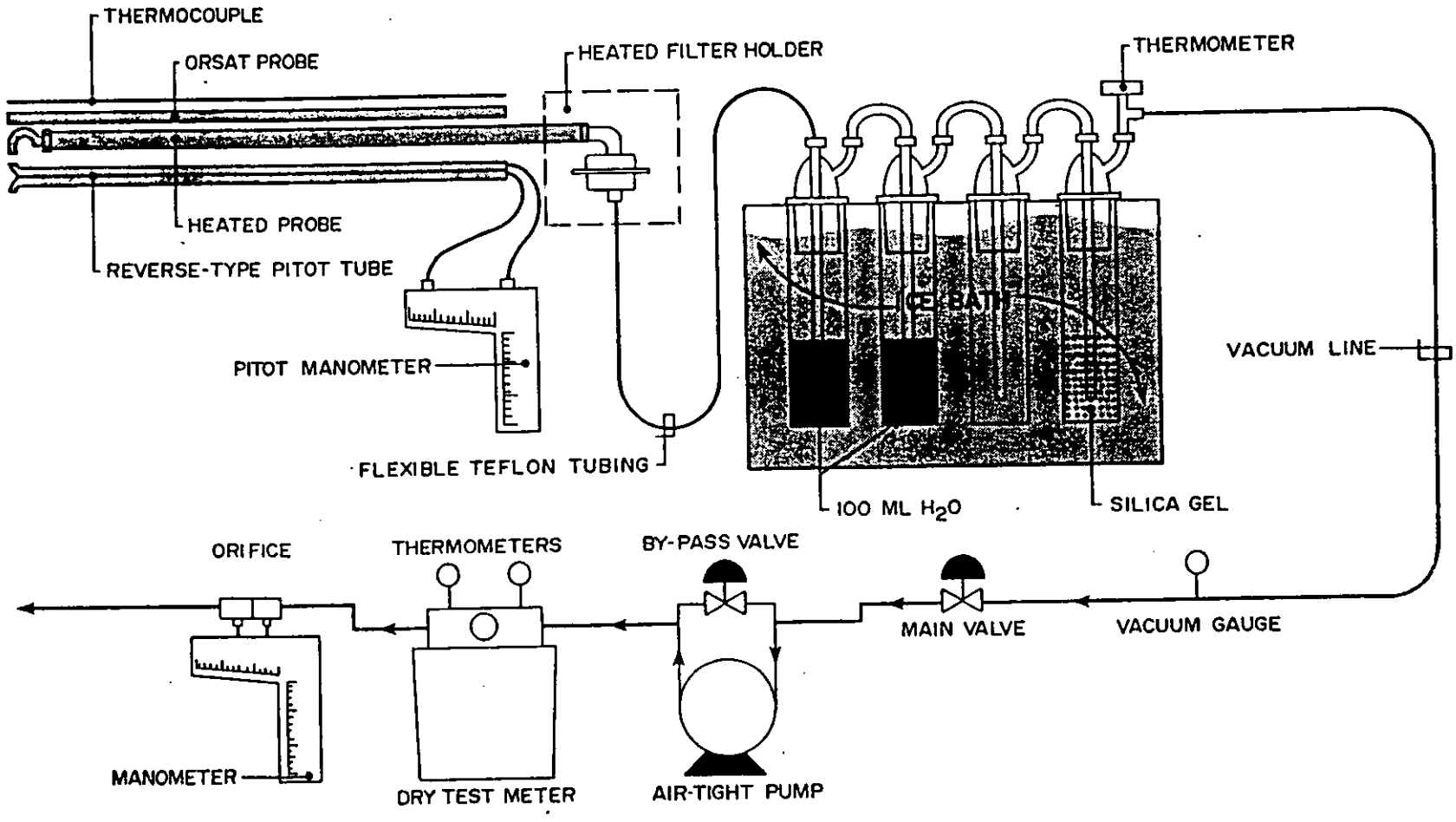

FIGURE 2
EPA METHOD 5 SAMPLING TRAIN

AIR CONSULTING
and
ENGINEERING

pyrometer. Velocity head measurements were made with a calibrated type "s" pitot tube and an inclined manometer. Velocity head measurements of 0.05 inches H2O or less were measured using a micromonometer.

The sampling traverse points were selected so that a representative sample could be extracted from the gas stream. The traverse points were located in the center of equal areas, the number of which were dependent upon the distance upstream or downstream from flow disturbances.USEPA Methods 1 and 2 were utilized for this task.

Each particulate matter test run consisted of sampling for a specific amount of time at each point. The type "s" pitot tube was connected to the sampling probe so that an instantaneous velocity head measurement could be made at each traverse point while conducting the test run. The stack gas temperature was also measured at each traverse point. Together with assumed moisture and orsat knowledge as well as known nozzle area, calculations of "isokinetic" (equal energy or velocity) were quickly made and effected for each traverse point during the test run.

The gases sampled passed through the following components: a stainless steel nozzle and glass probe; a glass fiber filter; two impingers charged with 100 ml of distilled water each; one dry impinger; one impinger with 200 grams of silica gel desiccant; a flexible length of tubing; a leak free pump; a calibrated dry gas meter: and, finally, a calibrated flow orifice.

Sample recovery was accomplished in the following manner:

1. The pre-tared filter was removed from its holder and placed in Container 1 and sealed. (This is usually performed in the lab).
2. All sample-exposed surfaces prior to the filter were washed with acetone and placed in Container 2. The container was then sealed and the liquid level marked.
3. The volume of water from the first three impingers was measured for the purpose of calculating the moisture content of the stack gases, then discarded.

4. The silica gel from the fourth impinger was transferred to the original tared container and sealed.

LABORATORY ANALYSIS

The three sample containers from each sample run were analyzed according to the following procedures:

1. The filter was either dried for two hours at 105 degrees C or desiccated for 24 hours at ambient temperature. Following desiccation, the filter was weighed to the nearest 0.1 mg. A minimum of two such weighings six hours apart were made with a variance of less than 0.5 mg.

2. The acetone from Container 2 was transferred to a tared beaker, evaporated to dryness, and weighed in the same manner as above.

3. The used silica gel in its tared container was weighed to the nearest 0.1 gram.

The total sample weight included the weight gains from Sample Containers 1 and 2.

DATA

All relevent field and lab data sheets as well as emission calculations are provided in the report appendices.

APPENDIX A

COMPLETE EMISSION DATA

AND

SAMPLE CALCULATIONS

AIR CONSULTING & ENGINEERING,INC.
Complete Emission Data

PLANT:	SUGAR GROWERS COOPERATIVE OF FL.	DATE:	12-5--90
LOCATION:	BELLE GLADE, FLORIDA	RUN NUMBER	1
SOURCE:	NUMBER 5 SCRUBBER OUTLET	TIME:	0744-0932

TIME INTERVAL	108	MINUTES
OIL:		
FINAL OIL	5760	
BEGIN OIL	5530	
FACTOR	1	
STEAM:		
FINAL STEAM	61062	
BEGIN STEAM	60937	
FACTOR	2500	
TEMPERATURE	580	DEGREES F
PRESSURE	430	PSIG
	445	PSIA
FEEDWATER:		
TEMPERATURE	260	DEGREES F
PRESSURE	600	PSIG
	615	PSIA
HEAT INPUT:		
STEAM	1291.2	BTU/LB
FEEDWATER	228.6	BTU/LB
NET STEAM	1062.6	BTU/LB
STEAM RATE	173611	LB/HR
BOILER EFFICIENCY	62.5	%
TOTAL FUEL HEAT INPUT	295.17	MMBTUH
STEAM INTEGRATOR FACTOR	1.00	
OIL	127.78	GPH
OIL	150000	BTU/GAL
TOTAL HEAT INPUT (OIL)	19.17	MMBTUH
TOTAL HEAT INPUT (NON-OIL)	276.00	MMBTUH
ALLOWABLES:		
ALLOWABLE EMISSION (OIL)	.10	LB/MMBTU
ALLOWABLE EMISSION (NON-OIL)	.25	LB/MMBTU
TOTAL ALLOWABLE EMISSION	70.92	LB/HR
TOTAL ACTUAL EMISSION	55.62	LB/HR
TOTAL ALLOWABLE EMISSION	0.240	LB/MMBTU
TOTAL ACTUAL EMISSION	0.188	LB/MMBTU

AIR CONSULTING & ENGINEERING,INC.
Complete Emission Data

PLANT:	SUGAR GROWERS COOPERATIVE OF FL.	DATE:	12-5--90
LOCATION:	BELLE GLADE, FLORIDA	RUN NUMBER	2
SOURCE:	NUMBER 5 SCRUBBER OUTLET	TIME:	0956-1144

TIME INTERVAL	108	MINUTES
OIL:		
FINAL OIL	56140	
BEGIN OIL	55810	
FACTOR	1	
STEAM:		
FINAL STEAM	61214	
BEGIN STEAM	61090	
FACTOR	2500	
TEMPERATURE	580	DEGREES F
PRESSURE	430	PSIG
	445	PSIA
FEEDWATER:		
TEMPERATURE	260	DEGREES F
PRESSURE	600	PSIG
	615	PSIA
HEAT INPUT:		
STEAM	1291.2	BTU/LB
FEEDWATER	228.6	BTU/LB
NET STEAM	1062.6	BTU/LB
STEAM RATE	172222	LB/HR
BOILER EFFICIENCY	62.5	%
TOTAL FUEL HEAT INPUT	292.81	MMBTUH
STEAM INTEGRATOR FACTOR	1.00	
OIL	183.33	GPH
OIL	150000	BTU/GAL
TOTAL HEAT INPUT (OIL)	27.50	MMBTUH
TOTAL HEAT INPUT (NON-OIL)	265.31	MMBTUH
ALLOWABLES:		
ALLOWABLE EMISSION (OIL)	.10	LB/MMBTU
ALLOWABLE EMISSION (NON-OIL)	.25	LB/MMBTU
TOTAL ALLOWABLE EMISSION	69.08	LB/HR
TOTAL ACTUAL EMISSION	59.69	LB/HR
TOTAL ALLOWABLE EMISSION	0.236	LB/MMBTU
TOTAL ACTUAL EMISSION	0.204	LB/MMBTU

AIR CONSULTING & ENGINEERING,INC.
Complete Emission Data

PLANT:	SUGAR GROWERS COOPERATIVE OF FL.	DATE:	12-5-90
LOCATION:	BELLE GLADE, FLORIDA	RUN NUMBER	3
SOURCE:	NUMBER 5 SCRUBBER OUTLET	TIME:	1213-1413

TIME INTERVAL	120	MINUTES
OIL:		
FINAL OIL	6540	
BEGIN OIL	6220	
FACTOR	1	
STEAM:		
FINAL STEAM	61380	
BEGIN STEAM	61248	
FACTOR	2500	
TEMPERATURE	580	DEGREES F
PRESSURE	425	PSIG
	440	PSIA
FEEDWATER:		
TEMPERATURE	260	DEGREES F
PRESSURE	600	PSIG
	615	PSIA
HEAT INPUT:		
STEAM	1291.7	BTU/LB
FEEDWATER	228.6	BTU/LB
NET STEAM	1063.1	BTU/LB
STEAM RATE	165000	LB/HR
BOILER EFFICIENCY	62.5	%
TOTAL FUEL HEAT INPUT	280.66	MMBTUH
STEAM INTEGRATOR FACTOR	1.00	
OIL	160.00	GPH
OIL	150000	BTU/GAL
TOTAL HEAT INPUT (OIL)	24.00	MMBTUH
TOTAL HEAT INPUT (NON-OIL)	256.66	MMBTUH
ALLOWABLES:		
ALLOWABLE EMISSION (OIL)	.10	LB/MMBTU
ALLOWABLE EMISSION (NON-OIL)	.25	LB/MMBTU
TOTAL ALLOWABLE EMISSION	66.56	LB/HR
TOTAL ACTUAL EMISSION	49.53	LB/HR
TOTAL ALLOWABLE EMISSION	0.237	LB/MMBTU
TOTAL ACTUAL EMISSION	0.176	LB/MMBTU

AIR CONSULTING AND ENGINEERING, INC.

Complete Emission Results

Plant:	SUGAR GROWERS COOPERATIVE FL.		
Location:	BELLE GLADE, FLORIDA	Date:	12-5-90
Stack:	NUMBER 5 BOILER	Run 1	From 0748 - 0927

Y Factor	0.994	Nozzle Diameter	0.274 In
Total Time	96.00 Min	Nozzle Area	0.000409 Ft-
Stack Area	44.680 Ft-	Barometric Pressure	30.16 In Hg
Stack Temperature	152.2 -F	Meter Temperature	74.8 -F
Stack Pressure	30.16 In Hg	Meter Orifice Diff	1.731 In H_2O
Stack Avg - Vel Head	0.653 In H_2O	Meter Volume	62.343 CF
		Condensate Vol	395.10 ml

1.	Volume Water Vapor Sampled	18.597	SCF
2.	Volume Standard Dry Gas Sampled	61.907	SCF
3.	Total Standard Sample Volume	80.505	SCF
4.	Percent Moisture	23.100	
5.	Percent Dry Air	76.900	
6.	Molecular Weight of Dry Flue Gas	30.154	
7.	Molecular Weight of Wet Flue Gas	27.346	
8.	Specific Gravity Flue Gas	0.95	
9.	Percent Oxygen [O_2]	8.25	
10.	Percent Carbon Dioxide [CO_2]	11.40	
11.	Percent Excess Air	63.646	
12.	Velocity of Flue Gas	40.401	FPS
13.	Actual Volumetric Flow Rate	108306.9	ACFM
14.	Dry Volumetric Flow Rate	83288.0	ACFMD
15.	Standard Volumetric Flow Rate	72405.6	SCFMD
16.	Emission Concentration	0.0896	gr/SCF
17.	Emission Concentration	0.0599	gr/ACF
18.	Emission Rate	55.62	lbs/Hr
19.	Percent Isokinetic	97.2	

Probe/Nozzle Wash	70.2	mg
Filter	289.4	mg
Total	359.6	mg

AIR CONSULTING AND ENGINEERING, INC.

Complete Emission Results

Plant:	SUGAR GROWERS COOPERATIVE FL.		
Location:	BELLE GLADE, FLORIDA	Date:	12-5-90
Stack:	NUMBER 5 BOILER	Run 2	From 1000 - 1139

Y Factor	0.994		Nozzle Diameter	0.274	In
Total Time	96.00	Min	Nozzle Area	0.000409	Ft-
Stack Area	44.680	Ft-	Barometric Pressure	30.16	In Hg
Stack Temperature	153.1	-F	Meter Temperature	79.5	-F
Stack Pressure	30.16	In Hg	Meter Orifice Diff	1.672	In H_2O
Stack Avg - Vel Head	0.638	In H_2O	Meter Volume	61.542	CF
			Condensate Vol	390.90	ml

1.	Volume Water Vapor Sampled	18.400	SCF
2.	Volume Standard Dry Gas Sampled	60.571	SCF
3.	Total Standard Sample Volume	78.970	SCF
4.	Percent Moisture	23.300	
5.	Percent Dry Air	76.700	
6.	Molecular Weight of Dry Flue Gas	29.950	
7.	Molecular Weight of Wet Flue Gas	27.166	
8.	Specific Gravity Flue Gas	0.94	
9.	Percent Oxygen [O_2]	8.75	
10.	Percent Carbon Dioxide [CO_2]	10.00	
11.	Percent Excess Air	68.898	
12.	Velocity of Flue Gas	39.633	FPS
13.	Actual Volumetric Flow Rate	106247.0	ACFM
14.	Dry Volumetric Flow Rate	81491.5	ACFMD
15.	Standard Volumetric Flow Rate	70742.7	SCFMD
16.	Emission Concentration	0.0984	gr/SCF
17.	Emission Concentration	0.0655	gr/ACF
18.	Emission Rate	59.69	lbs/Hr
19.	Percent Isokinetic	97.4	

Probe/Nozzle Wash	83.9	mg
Filter	302.5	mg
Total	386.4	mg

AIR CONSULTING AND ENGINEERING, INC.

Complete Emission Results

Plant:	SUGAR GROWERS COOPERATIVE FL.		
Location:	BELLE GLADE,FLORIDA	Date:	12-5-90
Stack:	NUMBER 5 BOILER	Run 3	From 1222 - 1408

Y Factor	0.994	Nozzle Diameter	0.274 In
Total Time	96.00 Min	Nozzle Area	0.000409 Ft-
Stack Area	44.680 Ft-	Barometric Pressure	30.16 In Hg
Stack Temperature	153.6 -F	Meter Temperature	80.4 -F
Stack Pressure	30.16 In Hg	Meter Orifice Diff	1.758 In H_2O
Stack Avg - Vel Head	0.655 In H_2O	Meter Volume	63.876 CF
		Condensate Vol	391.00 ml

1.	Volume Water Vapor Sampled	18.404	SCF
2.	Volume Standard Dry Gas Sampled	62.776	SCF
3.	Total Standard Sample Volume	81.181	SCF
4.	Percent Moisture	22.700	
5.	Percent Dry Air	77.300	
6.	Molecular Weight of Dry Flue Gas	29.950	
7.	Molecular Weight of Wet Flue Gas	27.237	
8.	Specific Gravity Flue Gas	0.94	
9.	Percent Oxygen [O_2]	8.75	
10.	Percent Carbon Dioxide [CO_2]	10.00	
11.	Percent Excess Air	68.898	
12.	Velocity of Flue Gas	40.652	FPS
13.	Actual Volumetric Flow Rate	108980.2	ACFM
14.	Dry Volumetric Flow Rate	84241.7	ACFMD
15.	Standard Volumetric Flow Rate	73073.1	SCFMD
16.	Emission Concentration	0.0791	gr/SCF
17.	Emission Concentration	0.0530	gr/ACF
18.	Emission Rate	49.53	lbs/Hr
19.	Percent Isokinetic	97.7	

Probe/Nozzle Wash	27.4	mg
Filter	294.3	mg
Total	321.7	mg

Avg O_2 = 8.6

Temp = 153

Flow = 72,074

MMBtu/h = 24 oil gph = 157

266 natural

290

Plant: SUGAR GROWERS COOPERATIVE FL.
Date: 12-5-90
Stack: NUMBER 5 BOILER

Vwv Volume Water Vapor Sampled
Vwv = 0.04707 x 395.1 = 18.597 SCF

VMstd Volume Standard Dry Gas Sampled
VMstd = 17.64 x 62.343 x 0.994 x
[30.16 + (1.731 / 13.6)] / (74.8 + 460) = 61.907 SCF

Vt Total Standard Sample Volume
Vt = 18.597 + 61.907 = 80.505 SCF

W Percent Water = (18.597 / 80.505) x 100 = 23.1 %

FDA Percent Dry Air = (1 - 0.231) x 100 = 76.9 %

Md Molecular Weight of Dry Stack Gas
Md = (0.44 X 11.40 %CO_2) + (0.32 X 8.25 %O_2) +
[0.28 X (80.35 %N_2 + 0.00 %CO)] = 30.154

Ms Molecular Weight of Wet Stack Gas
Ms = (30.154 x 0.769) + (18 x 0.231) = 27.346

SG Specific Gravity Stack Gas
SG = 27.346 / 28.84 = 0.95

Ea Percent Excess Air

$$Ea = \frac{((8.25\ \%O_2) - (0\ \%CO / 2) \times 100)}{[(.264 \times (80.35\ \%N_2)) - (8.25\ \%O_2) - (0\ \%CO / 2)]}$$

Ea = 63.646

Vs Velocity of Stack
Vs = (85.49 x 0.84 x 0.653) x -[(152.2 + 460) / (30.16 x 27.346)]
Vs = 40.401

Qa Actual Volumetric Flow
Qa = (44.680 x 40.401 x 60) = 108306.9 ACFM

Qd Dry Volumetric Flow
Qd = (108306.9 x 0.769) = 83288.0 ACFMD

Qsd Standard Volumetric Flow
Qsd = 108306.9 x 0.769 x [528 / (152.2 + 460)] x
(30.16 / 29.92) = 72405.6 SCFMD

Plant: SUGAR GROWERS COOPERATIVE FL.
Date: 12-5-90
Stack: NUMBER 5 BOILER

ESTP Emission Rate
gr/SCF = [0.01543 x (70.2 + 289.4)] / (61.907)
gr/SCF = 0.0896

Lbs/Hr Emission Rate
Lbs/Hr = 0.0896 / 7000 x 72405.6 x 60 = 55.62

I Percent Isokinetic
I = 100 x (152.2 + 460) x [(0.002669 x 395.1) + (62.343 x 0.994 /
(74.8 + 460)) x (30.16 + (1.731 / 13.6))] /
(60 x 96 x 40.401 x 30.16 x 0.000409)
I = 97.2 %

Plant: SUGAR GROWERS COOPERATIVE FL.
Date: 12-5-90
Stack: NUMBER 5 BOILER
Run Number: 1

Average SQR Velocity Head = 0.653
Velocity Head Inputs:

0.2000	0.2300	0.3300	0.4700	0.5400	0.5200	0.4500
0.5700	0.6300	0.5100	0.4000	0.3800	0.1900	0.2400
0.3200	0.5500	0.5500	0.5500	0.4500	0.5500	0.6000
0.5800	0.3400	0.2400	0.2700	0.2700	0.4000	0.5000
0.5800	0.5000	0.4300	0.4300	0.5300	0.5300	0.6000
0.2600	0.2100	0.2500	0.3000	0.4200	0.4700	0.5000
0.5000	0.6000	0.6200	0.5800	0.4200	0.4000	

Average Orifice Pressure = 1.731
Orifice Pressure Inputs:

1.3400	1.5400	1.2200	1.6500	1.9000	2.1000	1.8000
2.3000	2.5000	2.0500	1.6000	1.5000	0.7600	1.0000
1.3000	2.2000	2.2000	2.2000	1.8000	2.2000	2.4000
2.3000	1.4000	1.0000	1.1000	1.1000	1.6000	2.0000
2.3000	2.0000	1.7000	1.7000	2.1000	2.1000	2.2000
1.0000	0.8400	1.0000	1.2000	1.7000	1.9000	2.0000
2.0000	2.0000	2.0000	2.0000	1.7000	1.6000	

Average Stack Temperature = 152.2
Stack Temperature Inputs:

151	152	150	150	150	152	152
152	152	152	152	152	152	152
152	153	152	152	153	153	154
154	152	152	152	153	153	153
153	155	154	153	153	153	153
152	153	152	152	152	154	154
151	151	150	150	151	152	

Average Meter Temperature = 74.8
Meter Temperature Inputs:

67	67	67	68	68	68	69
69	70	70	70	71	72	72
72	73	73	73	74	75	75
75	75	76	76	76	77	77
77	77	77	78	78	78	78
78	79	79	79	79	79	79
79	79	80	80	80	80	

Plant: SUGAR GROWERS COOPERATIVE FL.
Date: 12-5-90
Stack: NUMBER 5 BOILER
Run Number: 2

Average SQR Velocity Head = 0.638
Velocity Head Inputs:

0.2100	0.2100	0.2600	0.3400	0.4600	0.5800	0.5600
0.4700	0.6300	0.6800	0.6000	0.4500	0.2200	0.2500
0.3000	0.4400	0.5400	0.5200	0.5200	0.4600	0.5900
0.6300	0.3200	0.2500	0.2400	0.2700	0.3500	0.3500
0.5300	0.5300	0.4100	0.4800	0.5200	0.5200	0.2600
0.2500	0.2200	0.2200	0.3400	0.4000	0.4600	0.4600
0.4600	0.5400	0.6300	0.4600	0.3800	0.3400	

Average Orifice Pressure = 1.672
Orifice Pressure Inputs:

0.8400	0.8400	1.0400	1.3500	1.8500	2.3000	2.2000
1.9000	2.5000	2.7000	2.4000	1.8000	0.8800	1.0000
1.2000	1.7500	2.1500	2.1000	2.1000	1.8000	2.3600
2.5000	1.3000	1.0000	1.0000	1.1000	1.4000	1.4000
2.1000	2.1000	1.6500	1.9000	2.1000	2.1000	1.0500
1.0000	0.8800	0.8800	1.3600	1.6000	1.8000	1.8000
1.8000	2.2000	2.5000	1.8000	1.5000	1.3600	

Average Stack Temperature = 153.1
Stack Temperature Inputs:

153	151	151	151	151	154	156
153	153	153	153	153	151	151
153	155	153	154	153	155	156
155	156	153	154	154	154	155
154	154	155	156	155	151	151
152	152	151	151	151	152	153
154	154	153	152	152	152	

Average Meter Temperature = 79.5
Meter Temperature Inputs:

76	76	76	76	76	76	76
76	77	77	77	78	78	78
78	79	79	79	79	79	80
80	80	80	80	80	80	80
81	81	81	81	81	81	81
81	81	81	81	82	82	82
82	82	82	82	82	82	

Plant: SUGAR GROWERS COOPERATIVE FL.
Date: 12-5-90
Stack: NUMBER 5 BOILER
Run Number: 3

Average SQR Velocity Head = 0.655
Velocity Head Inputs:

0.2100	0.2700	0.3200	0.4400	0.6200	0.6000	0.5000
0.5600	0.5800	0.6600	0.4600	0.3400	0.2400	0.2800
0.3400	0.5700	0.6000	0.5700	0.4800	0.5600	0.6200
0.5800	0.3300	0.2600	0.2600	0.2900	0.3000	0.5200
0.5800	0.5400	0.5400	0.5000	0.4800	0.5600	0.2800
0.2200	0.2200	0.2700	0.3200	0.3800	0.4400	0.5000
0.5000	0.5500	0.5800	0.5600	0.4200	0.3400	

Average Orifice Pressure = 1.758
Orifice Pressure Inputs:

0.8400	1.1000	1.3000	1.7600	2.5000	2.4000	2.0000
2.2000	2.3000	2.6000	1.8000	1.4000	1.0000	1.1000
1.3500	2.3000	2.4000	2.3000	1.9000	2.3000	2.5000
2.3000	1.3000	1.3000	1.0000	1.1600	1.2000	2.1000
2.3000	2.2000	2.2000	2.0000	2.0000	2.1000	1.1000
0.8800	0.8800	1.1000	1.3000	1.5000	1.8000	2.0000
2.0000	2.0000	2.0000	2.0000	1.8000	1.5000	

Average Stack Temperature = 153.6
Stack Temperature Inputs:

153	153	153	154	155	155	155
156	155	155	150	154	155	155
155	155	155	157	156	156	157
156	156	156	152	153	153	152
153	153	154	154	153	153	152
151	153	151	151	152	152	152
153	153	149	153	151	152	

Average Meter Temperature = 80.4
Meter Temperature Inputs:

77	77	77	77	77	77	77
78	78	78	79	79	80	80
80	80	80	80	81	81	81
81	82	82	81	81	81	81
81	81	81	81	81	81	81
81	82	82	82	82	82	82
82	82	82	83	83	83	

APPENDIX B

FIELD DATA SHEETS

STACK SAMPLING FIELD DATA SHEET

ACE AIR CONSULTING & ENGINEERING, INC.
2106 N. W. 67th PLACE · Suites 9 & 10
GAINESVILLE, FLORIDA 32606

TEST ID _____
PAGE ____ OF ____

PLANT Sugar Cane Growers Cooperative of FL
SOURCE Number 5 Boiler
PLANT LOCATION Belle Glade, FL.
TYPE OF SAMPLING TRAIN EPA-5
TYPE OF SAMPLES P.M.
DATE 12-5-90 RUN NO. 1
TIME START 0748 TIME END 0927
SAMPLE TIME 48, 2 (min/pt)= 96 Total min
ASSUMED MOISTURE 25 % FDA .75
NOMOGRAPH C_p 4 PITOT CORR. _____
P_b 30.16 "Hg P_s 30.16 "Hg
WEATHER Clear TEMP. 50 °F
METER BOX NO. 1 H 2.05 Y 0.994
NOZZLE CAL. .274 .274 .273 = .274
STACK DIMENSIONS _____
STACK AREA 44.68 ft.² EFFECTIVE _____ ft.²
STACK HEIGHT _____ ft.
STACK DIAMETER: UPSTRM. _____ DNSTRM. _____
PORT SIZE _____ in. NIPPLE LENGTH _____ in.
U CORD LENGTH 125
REMARKS: _____

55760 0932
55530 0744
861062
860937 0932

.7000
.4118
288.2
29

49.07

MAT'L PROCESSING RATE _____
GAS METER READINGS: FINAL 716.232 ft.³
INITIAL 653.889 ft.³
NET _____ ft.³
FILTER NO. 2846 IMP. VOL. GAIN 385 ml.
SIL GEL NO. 24 WT. GAIN 10.1 ml.
TOTAL CONDENSATE 395.1 ml.

ORSAT

	1	2	3	4	AVG.
% CO_2					11.4
% O_2					8.25
% CO					
% N_2					

F_O = _____ F_O RANGE = _____
ORSAT ANALYZER _____

LEAK CHECKS
PRE 0.005 cfm 27 "Hg POST 0.01 cfm 26 "Hg
METER BOX/PUMP _____ GAS SAMPLE SYST. _____
ORSAT BAG _____
PITOT TUBE NO. 1601 PRE-TEST 0.12
POST-TEST(+) 4.5 / 15 H_2O/Sec
POST-TEST(−) 3.8 / 15 H_2O/Sec
PYROMETER NO. 1
BOX OPERATOR Neil PROBE HOLDER Gerard

PORT AND TRAVERSE POINT NUMBER	DISTANCE FROM INSIDE STACK WALL /COMMENTS	CLOCK TIME	GAS METER READING (FT.³)	STACK VELOCITY HEAD (.025)	METER ORIFICE PRESS. DIFF. ("H_2O) CALC.	ACTUAL	STACK GAS TEMP (°F)	SAMPLE BOX TEMP (°F)	LAST IMPINGER TEMP (°F)	DRY GAS METER TEMP (°F)	VACUUM ON SAMPLE TRAIN ("Hg)
S1-1		0750	655.08	.20	1.34	1.34	151	250	42	67	7.0
2		0752	656.31	.23	1.54	1.54	152	249	40	67	7.5
3		0754	657.50	.33	1.22	1.22	150	252	39	67	7
4		0756	658.75	.47	1.65	1.65	150	253	37	68	7.50
5		0758	660.10	.54	1.9	1.9	150	252	38	68	8
6		0800	661.48	.52	2.1	2.1	152	252	38	68	11

ACE AIR CONSULTING & ENGINEERING, INC.

TEST ID _____

PAGE ____ OF ____

PORT AND TRAVERSE POINT NUMBER	DISTANCE FROM INSIDE STACK WALL /COMMENTS	CLOCK TIME	GAS METER READING (ft.^{3})	STACK VELOCITY HEAD	METER ORIFICE PRESS. DIFF. ("H_2O) CALC.	ACTUAL	STACK GAS TEMP. (°F)	SAMPLE BOX TEMP. (°F)	LAST IMPINGER TEMP. (°F)	DRY GAS METER TEMP. (°F)	VACUUM ON SAMPLE TRAIN ("Hg)
S1-7		0802	662.84	.45	1.8	1.8	152	254	38	69	10.5
8		0804	664.35	.57	2.3	2.3	152	257	38	69	13
9		0806	665.96	.63	2.5	2.5	152	259	39	70	15
10		0808	667.42	.57	2.05	2.05	152	262	40	70	12.5
11		0810	668.70	.40	1.6	1.6	152	264	40	70	10.5
12		0812	669.94	.38	1.5	1.5	152	264	40	71	10
S2-1		0815	670.81	.19	.76	.76	152	264	41	72	6.5
2		0817	671.81	.24	1	1	152	265	41	72	8
3		0819	672.94	.32	1.3	1.3	152	262	40	72	9.5
4		0821	674.42	.55	2.2	2.2	153	262	39	73	14.5
5		0823	675.90	.55	2.2	2.2	152	261	38	73	16.5
6		0825	677.32	.55	2.2	2.2	152	258	40	73	14.5
7		0827	678.67	.45	1.8	1.8	153	255	40	74	13
8		0829	680.10	.55	2.2	2.2	153	259	40	75	16
9		0831	681.61	.60	2.4	2.4	154	261	40	75	17
10		0833	683.12	.58	2.3	2.3	154	263	40	75	17.5
11		0835	684.35	.34	1.4	1.4	152	260	40	75	11.5
12		0837	685.38	.24	1	1	152	262	41	76	10
N1-1		0840	686.40	.27	1.1	1.1	152	267	42	76	10
2		0842	687.45	.27	1.1	1.1	153	270	41	76	10
3		0844	688.67	.40	1.6	1.6	153	268	41	77	13.5
4		0846	690.06	.50	2.0	2.0	153	268	40	77	16.5
5		0848	691.6	.58	2.3	2.3	153	269	40	77	20
6		0850	693.05	.50	2.0	2.0	155	269	41	77	19
7		0852	694.36	.43	1.7	1.7	154	268	41	77	15.5

ACE AIR CONSULTING & ENGINEERING, INC.

TEST ID _____

PAGE ____ OF ____

PORT AND TRAVERSE POINT NUMBER	DISTANCE FROM INSIDE STACK WALL /COMMENTS	CLOCK TIME	GAS METER READING (ft.^{3})	STACK VELOCITY HEAD	METER ORIFICE PRESS. DIFF. ("H_2O) CALC.	ACTUAL	STACK GAS TEMP (°F)	SAMPLE BOX TEMP (°F)	LAST IMPINGER TEMP (°F)	DRY GAS METER TEMP (°F)	VACUUM ON SAMPLE TRAIN ("Hg)
N-1-8		0854	695.70	.43	1.7	1.7	153	265	41	78	15.5
9		0856	697.08	.53	2.1	2.1	153	262	41	78	18.5
10		0858	698.53	.53	2.1	2.1	153	266	42	78	19
11		0900	700.00	.60	2.4	2.2	153	265	42	78	19
12		0902	701.1	.26	1	1	152	265	43	78	12
N-2-1		0905	701.98	.21	.84	.84	153	268	43	79	10
2		0907	702.94	.25	1.0	1.0	152	271	43	79	11
3		0909	704.03	.30	1.2	1.2	152	269	43	79	13
4		0911	705.3	.42	1.7	1.7	152	271	43	79	17
5		0913	706.68	.47	1.9	1.9	154	273	42	79	20
6		0915	708.07	.50	2.0	2.0	154	269	42	79	21.5
7		0917	709.45	.50	2.0	2.0	151	273	42	79	22
8		0919	711.—	.60	2.4	2.0	151	274	43	79	22
9		0921	712.25	.62	2.5	2.0	150	271	43	80	22
10		0923	713.62	.58	2.3	2.0	150	272	43	80	22
11		0925	714.95	.42	1.7	1.7	151	272	43	80	21
12		0927	716.232	.40	1.6	1.6	152	272	43	80	21

STACK SAMPLING FIELD DATA SHEET

ACE AIR CONSULTING & ENGINEERING, INC.
2106 N. W. 67th PLACE · Suites 9 & 10
GAINESVILLE, FLORIDA 32606

TEST ID _____
PAGE ____ OF ____

PLANT Sugar Cane Growers Cooperative of FL.
SOURCE No. 5 Boiler
PLANT LOCATION Belle Glade, FL.
TYPE OF SAMPLING TRAIN EPA-5
TYPE OF SAMPLES PM
DATE 12-5-90 RUN NO. 2
TIME START 1000 TIME END 1139
SAMPLE TIME 48, 2 (min/pt)= 96 Total min
ASSUMED MOISTURE ____ % FDA ____
NOMOGRAPH C_f 4 PITOT CORR. .84
P_b ____ "Hg P_s ____ "Hg
WEATHER CLEAR TEMP. ____ °F
METER BOX NO. 1 H 2.05 Y 0.995
NOZZLE CAL. ____ ____ ____ = .274
STACK DIMENSIONS 62 x 2
STACK AREA 4.68 ft.² EFFECTIVE ____ ft.²
STACK HEIGHT ____ ft.
STACK DIAMETER: UPSTRM. ____ DNSTRM. ____
PORT SIZE ____ in. NIPPLE LENGTH ____ in.
U CORD LENGTH ____
REMARKS: ____

56140 1144
55810 0956

861214
861090

MAT'L PROCESSING RATE ____
GAS METER READINGS: FINAL 778.150 ft.³
INITIAL 716.608 ft.³
NET ____ ft.³
FILTER NO. 2847 IMP. VOL. GAIN 380 ml.
SIL GEL NO. 73 WT. GAIN 10.9 ml.
TOTAL CONDENSATE 390.9 ml.

ORSAT

	1	2	3	4	AVG.
% CO_2					10.0
% O_2					8.75
% CO					
% N_2					

F_O = ____ F_O RANGE = ____
ORSAT ANALYZER ____

LEAK CHECKS
PRE 0.01 cfm 27 "Hg POST 0.00 cfm 20 "Hg
METER BOX/PUMP ____ GAS SAMPLE SYST. ____
ORSAT BAG ____
PITOT TUBE NO. 1601 PRE-TEST O.K
POST-TEST(+) 3.4 / 15 H_2O/Sec
POST-TEST(−) 3.9 / 15 H_2O/Sec
PYROMETER NO. 1
BOX OPERATOR Neck PROBE HOLDER Gerry

PORT AND TRAVERSE POINT NUMBER	DISTANCE FROM INSIDE STACK WALL /COMMENTS	CLOCK TIME	GAS METER READING (FT.³)	STACK VELOCITY HEAD	METER ORIFICE PRESS. DIFF. ("H_2O) CALC.	ACTUAL	STACK GAS TEMP (°F)	SAMPLE BOX TEMP (°F)	LAST IMPINGER TEMP. F	DRY GAS METER TEMP. (°F)	VACUUM ON SAMPLE TRAIN ("Hg)
S-1-1		1002	717.63	.21	.84	.84	153	272	50	76	6.0
2		1004	718.63	.21	.84	.84	151	271	45	76	6.0
3		1006	719.76	.26	1.04	1.04	151	274	44	76	6.5
4		1008	720.83	.34	1.35	1.35	151	272	43	76	7.5
5		1010	722.16	.46	1.85	1.85	151	271	42	76	10
6		1012	723.66	.58	2.3	2.3	154	271	42	76	12.5

AGE AIR CONSULTING & ENGINEERING, INC.

TEST ID _____

PAGE ____ OF ____

PORT AND TRAVERSE POINT NUMBER	DISTANCE FROM INSIDE STACK WALL /COMMENTS	CLOCK TIME	GAS METER READING (ft.^{3})	STACK VELOCITY HEAD	METER ORIFICE PRESS. DIFF. ("H_2O)		STACK GAS TEMP. (°F)	SAMPLE BOX TEMP. (°F)	LAST IMPINGER TEMP. (°F)	DRY GAS METER TEMP. (°F)	VACUUM ON SAMPLE TRAIN ("Hg)
					CALC.	ACTUAL					
S-1-7		1014	725.14	.56	2.2	2.2	156	273	43	76	12.5
8		1016	726.52	.47	1.9	1.9	153	271	44	76	11
9		1018	728.08	.63	2.5	2.5	153	272	44	77	16.5
10		1020	729.72	.68	2.7	2.7	153	266	44	77	16.5
11		1022	731.17	.60	2.4	2.4	153	264	45	77	15
12		1024	732.64	.45	1.8	1.8	153	262	45	78	12
S-2-1		1027	733.6	.22	.88	.88	151	266	46	78	7
2		1029	734.6	.25	1.0	1.0	151	264	46	78	8
3		1031	735.71	.30	1.2	1.2	153	262	45	78	9
4		1033	737.0	.44	1.75	1.75	155	260	45	79	12
5		1035	738.45	.54	2.15	2.15	153	261	45	79	14.5
6		1037	739.9	.52	2.1	2.1	154	261	45	79	14.5
7		1039	741.33	.52	2.1	2.1	153	258	45	79	14.5
8		1041	742.67	.46	1.8	1.8	155	259	45	79	13.5
9		1043	744.2	.59	2.36	2.36	156	256	46	80	17.5
10		1045	745.78	.63	2.5	2.5	155	255	46	80	20
11		1047	747.00	.32	1.3	1.3	156	255	46	80	11
12		1049	748.06	.25	1.0	1.0	153	256	47	80	10
N-1-1		1052	749.04	.24	1.0	1.0	154	258	49	80	9.5
2		1054	750.05	.27	1.1	1.1	154	261	48	80	10
3		1056	751.22	.35	1.4	1.4	154	261	47	80	12
4		1058	752.38	.35	1.4	1.4	155	263	46	80	12
5		1100	753.8	.53	2.1	2.1	154	262	46	81	17
6		1102	755.2	.53	2.1	2.1	154	265	47	81	17
7		1104	756.55	.41	1.65	1.65	155	267	45	81	15

ACE AIR CONSULTING & ENGINEERING, INC.

TEST ID _____

PAGE ____ OF ____

PORT AND TRAVERSE POINT NUMBER	DISTANCE FROM INSIDE STACK WALL /COMMENTS	CLOCK TIME	GAS METER READING (ft.^{3})	STACK VELOCITY HEAD	METER ORIFICE PRESS. DIFF. ("H_2O)		STACK GAS TEMP. (°F)	SAMPLE BOX TEMP. (°F)	LAST IMPINGER TEMP. (°F)	DRY GAS METER TEMP. (°F)	VACUUM ON SAMPLE TRAIN ("Hg)
					CALC.	ACTUAL					
N-1-8		1106	757.9	.48	1.9	1.9	156	264	46	81	16.5
9		1108	759.3	.52	2.1	2.1	155	263	47	81	17.5
10		1110	760.71	.52	2.1	2.1	151	263	46	81	17.5
11		1112	761.78	.26	1.05	1.05	151	263	46	81	11
12		1114	762.82	.25	1.0	1.0	152	270	47	81	11
N-2-1		1117	763.83	.22	.88	.88	152	273	48	81	10.5
2		1119	764.8	.22	.88	.88	151	273	48	81	10.5
3		1121	765.94	.34	1.36	1.36	151	266	47	81	13.5
4		1123	767.22	.40	1.6	1.6	151	263	47	82	15.5
5		1125	768.57	.46	1.8	1.8	152	266	47	82	17.5
6		1127	769.94	.46	1.8	1.8	153	265	48	82	17.5
7		1129	771.27	.46	1.8	1.8	154	266	48	82	17.5
8		1131	772.7	.54	2.2	2.2	154	270	49	82	21.5
9		1133	774.2	.63	2.5	2.5	153	266	49	82	21.5
10		1135	775.60	.46	1.8	1.8	152	264	49	82	21.5
11		1137	776.95	.38	1.5	1.5	152	264	49	82	21.5
12		1139	778.150	.34	1.36	1.36	152	260	48	82	15

STACK SAMPLING FIELD DATA SHEET

ACE AIR CONSULTING & ENGINEERING, INC.
2106 N. W. 67th PLACE · Suites 9 & 10
GAINESVILLE, FLORIDA · 32606

TEST ID _____
PAGE ____ OF ____

PLANT Sugar Cane Growers Cooperative
SOURCE Number 5 Boiler
PLANT LOCATION Belle Glade, FL.
TYPE OF SAMPLING TRAIN EPA-5
TYPE OF SAMPLES PM
DATE 12-5-90 RUN NO. 3
TIME START 1222 TIME END 1408
SAMPLE TIME 48, 2 (min/pt) = 96 Total min
ASSUMED MOISTURE _____ % FDA _____
NOMOGRAPH C_f _____ PITOT CORR. .84
P_b 30.16 "Hg P_s 30.16 "Hg
WEATHER CLEAR TEMP. _____ °F
METER BOX NO. 1 H 2.05 Y 0.994
NOZZLE CAL. _____ _____ _____ = .274
STACK DIMENSIONS _____
STACK AREA 47.68 ft.² EFFECTIVE _____ ft.²
STACK HEIGHT _____ ft.
STACK DIAMETER: UPSTRM. _____ DNSTRM. _____
PORT SIZE _____ in. NIPPLE LENGTH _____ in.
U CORD LENGTH _____
REMARKS: _____

56540 1212
36220 1213

861380
861248

.7020
.4093
2927

MAT'L PROCESSING RATE 842.288
GAS METER READINGS: FINAL 778.412 ft.³
INITIAL _____ ft.³
NET _____ ft.³
FILTER NO. 2848 IMP. VOL. GAIN 380 ml.
SIL GEL NO. 54 WT. GAIN 11.0 ml.
TOTAL CONDENSATE 391.0 ml.

ORSAT

	1	2	3	4	AVG.
% CO_2					10
% O_2					8.75
% CO					
% N_2					

F_O = _____ F_O RANGE = _____
ORSAT ANALYZER _____

LEAK CHECKS
PRE 0.002 cfm 20 "Hg POST 0.002 cfm 24 "Hg
METER BOX/PUMP _____ GAS SAMPLE SYST. _____
ORSAT BAG _____
PITOT TUBE NO. 1601 PRE-TEST O.K.
POST-TEST(+) 4.91 / 15 H_2O/Sec
POST-TEST(−) 4.01 / 15 H_2O/Sec
PYROMETER NO. _____
BOX OPERATOR Neels PROBE HOLDER Corns

PORT AND TRAVERSE POINT NUMBER	DISTANCE FROM INSIDE STACK WALL /COMMENTS	CLOCK TIME	GAS METER READING (FT.³)	STACK VELOCITY HEAD	METER ORIFICE PRESS. DIFF. ("H_2O) CALC.	ACTUAL	STACK GAS TEMP. (°F)	SAMPLE BOX TEMP. (°F)	LAST IMPINGER TEMP. F	DRY GAS METER TEMP. (°F)	VACUUM ON SAMPLE TRAIN ("Hg)
5-1-1		1224	779.41	.21	.84	.84	153	253	52	77	5
2		1226	780.45	.27	1.1	1.1	153	254	48	77	6
3		1228	781.6	.32	1.3	1.3	153	254	45	77	7
4		1230	782.93	.44	1.76	1.76	154	255	43	77	9.5
5		1232	784.53	.62	2.5	2.5	155	250	37	77	13.5
6		1234	786.1	.60	2.4	2.4	155	252	38	77	13.5

AIR CONSULTING & ENGINEERING, INC.

TEST ID _____

PAGE ____ OF ____

PORT AND TRAVERSE POINT NUMBER	DISTANCE FROM INSIDE STACK WALL /COMMENTS	CLOCK TIME	GAS METER READING (ft.^{3})	STACK VELOCITY HEAD	METER ORIFICE PRESS. DIFF. ("H_2O) CALC.	ACTUAL	STACK GAS TEMP. (°F)	SAMPLE BOX TEMP. (°F)	LAST IMPINGER TEMP. (°F)	DRY GAS METER TEMP. (°F)	VACUUM ON SAMPLE TRAIN ("Hg)
S1-7		1236	787.6	.50	2.0	2.0	155	252	46	77	16.5
8		1238	789.1	.56	2.2	2.2	156	256	46	78	13
9		1240	790.62	.58	2.3	2.3	155	252	46	78	14
10		1242	792.28	.66	2.6	2.6	155	252	45	78	17
11		1244	793.68	.46	1.8	1.8	150	249	47	79	16.5
12		1246	794.84	.34	1.4	1.4	154	250	47	79	9
S2-1		1249	795.8	.24	1.0	1.0	155	249	49	80	7.5
2		1251	796.86	.28	1.1	1.1	155	247	47	80	8.5
3		1253	798.0	.34	1.35	1.35	155	248	49	80	10
4		1255	799.0	.57	2.3	2.3	155	248	48	80	16
5		1257	800.70	.60	2.4	2.4	155	248	48	80	17
6		1259	802.25	.57	2.3	2.3	157	248	47	80	17
7		1301	803.68	.48	1.9	1.9	156	249	47	81	17
8		1303	805.23	.56	2.3	2.3	156	251	48	81	17.5
9		1305	806.90	.62	2.5	2.5	157	249	48	81	21
10		1307	808.50	.58	2.3	2.3	156	257	48	81	21
11		1309	809.70	.33	1.3	1.3	156	253	48	82	12
12		1311	810.88	.26	1.3	1.3	156	257	49	82	12
N1-1		1321	811.92	.26	1.0	1.0	152	274	53	81	10
2		1323	812.91	.29	1.16	1.16	153	274	50	81	10
3		1325	814.02	.30	1.2	1.2	153	274	48	81	11
4		1327	815.50	.52	2.1	2.1	152	268	47	81	17.5
5		1329	817.04	.58	2.3	2.3	153	271	48	81	21
6		1331	818.54	.54	2.2	2.2	153	271	48	81	21
7		1333	820.05	.54	2.2	2.2	154	268	48	81	21

ACE AIR CONSULTING & ENGINEERING, INC.

TEST ID _____

PAGE ____ OF ____

PORT AND TRAVERSE POINT NUMBER	DISTANCE FROM INSIDE STACK WALL /COMMENTS	CLOCK TIME	GAS METER READING (ft.^{3})	STACK VELOCITY HEAD	METER ORIFICE PRESS. DIFF. ("H_2O) CALC.	ACTUAL	STACK GAS TEMP (°F)	SAMPLE BOX TEMP. (°F)	LAST IMPINGER TEMP. (°F)	DRY GAS METER TEMP. (°F)	VACUUM ON SAMPLE TRAIN ("Hg)
N1-8		1335	821.48	.50	2.0	2.0	154	264	49	81	18.5
9		1337	822.88	.48	2.0	2.0	153	265	48	81	19
10		1339	824.36	.56	2.2	2.0	153	270	48	81	21.5
11		1341	825.55	.28	1.1	1.1	152	266	49	81	14
12		1343	826.63	.22	.88	.88	151	265	49	81	12.5
N2-1		1346	827.73	.22	.88	.88	153	268	50	82	13
2		1348	828.82	.27	1.1	1.1	151	259	49	82	13
3		1350	830.0	.32	1.3	1.3	151	245	49	82	14
4		1352	831.15	.38	1.5	1.5	152	241	49	82	15
5		1354	832.44	.44	1.8	1.8	152	240	49	82	19
6		1356	833.90	.50	2.0	2.0	153	240	49	82	21.5
7		1358	835.35	.50	2.0	2.0	153	246	50	82	21.5
8		1400	836.75	.55	2.2	2.0	149	251	50	82	21.5
9		1402	838.09	.58	2.3	2.0	153	250	50	82	21.5
10		1404	839.60	.56	2.2	2.0	151	244	50	83	21.5
11		1406	840.98	.42	1.7	1.8	152	244	50	83	21
12		1408	842.288	.34	1.4	1.5	152	247	50	83	18

APPENDIX C

LABORATORY ANALYSES

AIR CONSULTING & ENGINEERING, inc.

PARTICULATE LAB DATA

SOURCE SCGC OF FLORIDA NUMBER 5 BOILER 3

PROBE RINSE	RUN 1	RUN 2	RUN 3	BLANK	
CONTAINER NUMBER	5-15	5-30	5-31	5-35	
TOTAL VOLUME (ml)	160	280	160	100	LIQUID LEVEL ✓
1st GROSS WEIGHT (g)	102.3690	101.0382	103.7112	106.1683	DATE & TIME:
2nd GROSS WEIGHT (g)	102.3686	101.0379	103.7112	106.1682	DATE & TIME:
AVERAGE GROSS WEIGHT (g)	102.3688	101.0381	103.7112	106.1683	
TARE WEIGHT (g)	102.2986	100.9542	103.6838	106.1665	
SUB NET WEIGHT (g)	0.0702	0.0839	0.0274	.0018	
ACETONE BLANK (g)					
TOTAL NET WEIGHT (mg)	70.2	83.9	27.4	1.8	

NOTE: In no case should a blank residue >0.01 mg/g or 0.001% of the weight of acetone used be subtracted from the sample weight.

FILTER	RUN 1	RUN 2	RUN 3	BLANK	
FILTER NUMBER	2846	2847	2848	2899	
1st GROSS WEIGHT (g)	.7012	.7145	.7036	.3993	DATE & TIME: 12-7-90 0830
2nd GROSS WEIGHT (g)	.7012	.7143	.7036	.3993	DATE & TIME: 12-7-90 1630
AVERAGE GROSS WEIGHT (g)	.7012	.7144	.7036	.3993	
TARE WEIGHT (g)	.4118	.4119	.4083	.3993	
SUB NET WEIGHT (g)	.2894	.3025	0.2943	0	
TOTAL NET WEIGHT (mg)	289.4	302.5	294.3	0	

TARE BALANCE CHECK

SEE LAB BOOK

1st GROSS WEIGHT BALANCE CHECK

0 0.0000 10.0g —
0.5 g 0.5000 100.0g 100.0000
%RH 47 DATE 12-7-90
Signature S. A. Neal

2nd GROSS WEIGHT BALANCE CHECK

0 0.0000 10.0g —
0.5g 0.5000 100.0000
%RH 48 DATE 12-7-90
Signature S. A. Neal

APPENDIX D

QUALITY ASSURANCE

AND

CHAIN OF CUSTODY

STANDARD METER CALIBRATION
Meter Number 1040616

Air Consulting and Engineering, Inc. (ACE) uses a dry gas meter for the calibration standard. This meter has been calibrated against a wet test meter in triplicate. This data was used to generate a standard meter calibration curve (see next page). Field meter calibrations are corrected to this curve using the following formula:

$$Y_a \times Y_s = Y$$

Y_a = actual ratio of field meter to standard meter

Y_s = ratio of standard meter to wet test meter at a given flow rate (from Calibration Curve)

Y = corrected ratio of field meter

The dry standard meter was calibrated on November 23, 1990, and is checked and/or recalibrated at least annually.

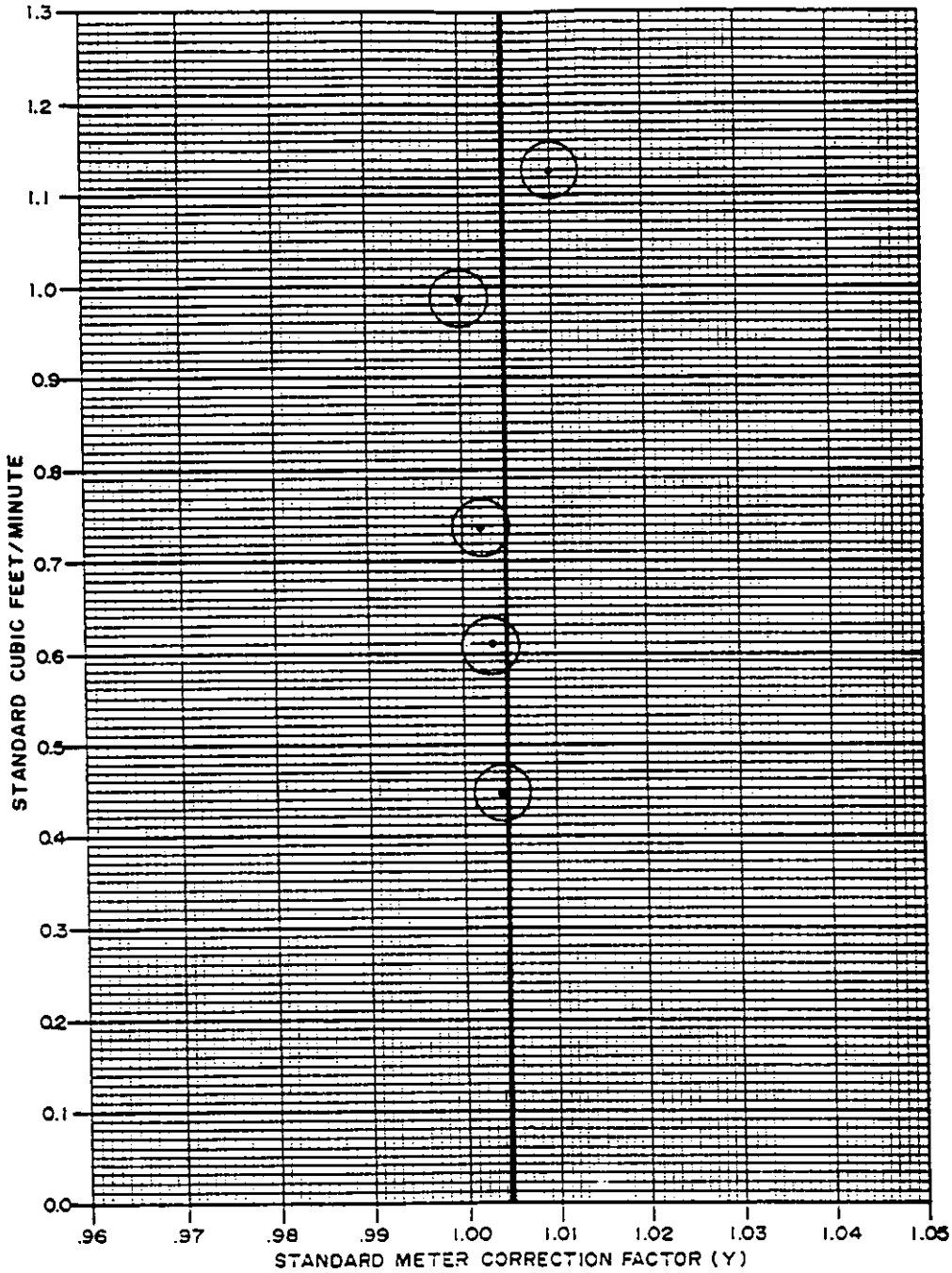

STANDARD METER CALIBRATION CURVE
METER SERIAL NO. 1040616 (SOUTH)
NOVEMBER 23, 1990

AIR CONSULTING
and
ENGINEERING

AIR CONSULTING & ENGINEERING — STANDARD METER CALIBRATION

DATE 11-23-90

LEAK CHECK 0.000 CFM at 12 in. Hg.

METER SERIAL NUMBER 1040616 (South)

BAROMETRIC PRESSURE 30.07 in. Hg.

STD GAS METER TEMPERATURE 67 °F / ASTM GLASS THERMOMETER TEMPERATURE 69 °F

WET ΔH	STD ΔH	GAS VOLUME, WET TEST METER			GAS VOLUME, STD GAS METER			TEMP. WET TEST METER (°F)	TEMP. OF STD. METER (°F)	TIME (Minutes)
		INITIAL	FINAL	ACTUAL ft^3	INITIAL	FINAL	ACTUAL ft^3			
-0.1	-1.1	0.000	5.333	5.333	272.003	277.309	5.306	70	67	12
-0.1	-1.1	5.333	10.664	5.331	277.309	282.600	5.291	70	67	12
-0.1	-1.1	10.664	15.982	5.318	282.600	287.877	5.277	70	67	12
-0.3	-1.9	0.000	5.490	5.490	288.149	293.623	5.474	70	67	9
-0.3	-1.9	5.490	12.799	7.309	293.623	300.898	7.275	70	67	12
-0.3	-1.9	12.799	18.278	5.479	300.898	306.359	5.461	70	67	9
-0.4	-2.5	0.000	5.160	5.160	306.712	311.863	5.151	70	67	7
-0.4	-2.5	5.160	10.321	5.161	311.863	317.017	5.154	70	67	7
-0.4	-2.5	10.321	15.488	5.167	317.017	322.173	5.156	70	67	7
-0.5	-3.7	0.000	7.481	7.481	322.562	330.068	7.506	70	67	8
-0.5	-3.7	7.481	14.039	6.558	330.068	336.655	6.587	70	67	7
-0.5	-3.7	14.039	19.649	5.610	336.655	342.278	5.623	70	67	6
-0.7	-5.3	0.000	5.639	5.639	342.648	348.279	5.631	70	67	5
-0.7	-5.3	5.639	11.268	5.629	348.279	353.889	5.610	70	67	5
-0.7	-5.3	11.268	16.889	5.621	353.889	359.498	5.609	70	67	5

CALIBRATED BY: G. F. Gabel

	Y	SCFM	Y	SCFM	Y	SCFM	Y	SCFM	Y	SCFM
Run 1	1.002	0.445	1.002	0.611	1.002	0.738	1.000	0.986	1.009	1.129
Run 2	1.005	0.445	1.004	0.610	1.002	0.738	0.999	0.986	1.011	1.127
Run 3	1.005	0.444	1.002	0.610	1.003	0.739	1.001	0.986	1.010	1.126
Average	1.004	0.444	1.003	0.610	1.002	0.738	1.000	0.986	1.010	1.127

air consulting and engineering

AIR CONSULTING & ENGINEERING — ANNUAL METER CALIBRATION

DATE 6-7-90

LEAK CHECK 0.000 CFM at 12 In. Hg.

METER BOX NUMBER 1

BAROMETRIC PRESSURE 30.02 In. Hg.

DRY GAS METER TEMPERATURE 89 °F/ASTM GLASS THERMOMETER TEMPERATURE 90 °F

ΔHS	AVERAGE ΔHD	GAS VOLUME, STANDARD METER			GAS VOLUME, DRY GAS METER			TEMP. STD. METER	TEMP. OF DRY METER	TIME (Minutes)	TIMER
		INITIAL	FINAL	ACTUAL ft^3	INITIAL	FINAL	ACTUAL ft^3				
-.07	0.5	206.539	214.496	7.957	719.311	727.244	7.933	85	85	21	21
-.15	1.25	215.308	221.239	5.931	728.042	733.952	5.910	85	86	10	
-.22	2.0	221.610	227.578	5.968	734.320	740.265	5.945	85	87	8	
-.32	2.75	228.029	233.291	5.262	740.708	745.940	5.232	86	88	6	
-.40	3.5	233.668	239.592	5.924	746.315	752.205	5.890	87	90	6	
-.50	4.25	240.117	245.527	5.410	752.724	758.112	5.388	87	91	5	

	DELTA H	Ya	SCFM	Ys	Y
	2.004	1.002	0.368	1.004	1.006
	2.041	1.002	0.577	0.998	1.000
	2.061	1.003	0.725	0.993	0.996
	2.054	1.003	0.851	0.989	0.992
	2.063	1.003	0.956	0.985	0.988
	2.082	1.001	1.048	0.983	0.984
MEAN:	2.051	1.002		0.992	0.994

CALIBRATED BY: H. F. Gabel

AIR CONSULTING & ENGINEERING, inc. POST TEST CALIBRATION

DATE 12-22-90 METER BOX NUMBER 1 LEAK CHECK 0.00 CFM at 22 in. Hg.

CLIENT ATLANTIC SUGAR + S.G. Co-op SOURCE VARIOUS THERMOCOUPLE NUMBER 1601 PYROMETER NUMBER 1

FLIGHT SERVICE Pb 30.10 in. Hg. ACE BAROMETER Pb 30.11 in. Hg.

ASTM GLASS THERMOMETER 149 °F / THERMOCOUPLE 150 °F ASTM GLASS THERMOMETER 68 °F / METER TEMP 68 °F

ΔHS	AVERAGE ΔHD	GAS VOLUME, STANDARD METER			GAS VOLUME, DRY GAS METER			TEMP. STANDARD METER	TEMP. OF DRY METER	TIME (Minutes)	MAX. VACUUM In. Hg.
		INITIAL	FINAL	ACTUAL ft^3	INITIAL	FINAL	ACTUAL ft^3				
.26	2.1	452.500	493.960	41.46	290.053	331.598	41.545	71 73	69 76	55	21
.19	1.5	493.960	509.942	15.982	331.598	347.654	16.056	73 75	76 78	25	22
.32	2.7	509.942	569.500	59.558	347.654	406.860	59.226	75 76	78 82	101	20

CALIBRATED BY: S. L. Peck

	DELTA H	Ya	SCFM	Ys	Y
	2.068	0.994	0.753	0.993	0.987
	2.052	0.997	0.636	0.995	0.992
	4.341	1.007	0.585	0.998	1.005
MEAN:	2.820	1.000		0.995	0.995

air consulting and engineering

AIR CONSULTING & ENGINEERING, INC. — PITOT TUBE CALIBRATION

DATE CALIBRATED 9-25-90 PITOT TUBE 1601

IS PITOT TUBE ASSEMBLY LEVEL YES ARE PITOT TUBE OPENINGS DAMAGED no

α_1 = 0 °(<10°), α_2 = 1.5 °(<10°), β_1 = 1 °(<5°), β_2 = 2 °(<5°)

γ = 1.5 ° θ = 1 ° A = 1.179 in. = (Pa + Pb)

z = A sin γ = 0.031 in.; <0.32/<1/8 in.

w = A sin θ = 0.021 in.; <0.08/<1/32 in.

P_a 0.5895 in. P_b 0.5895 in. D_t .375

WAS CALIBRATION REQUIRED no

THERMOCOUPLE CALIBRATION

SOURCE (SPECIFY)	ASTM GLASS THERMOMETER WITH MERCURY (°F)	PYROMETER (°F)	DEGREE DIFFERENCE	PERCENT DIFFERENCE
ICE BATH				
AMBIENT				
HOT OVEN				

FDER - MAXIMUM 5° DIFFERENCE

CALIBRATED BY: _____

EPA $\left[\frac{(\text{REF. TEMP. °F} + 460°) - (\text{PYROMETER TEMP. °F} + 460°)}{\text{REF. TEMP. °F} + 460°}\right] 100 \leq 1.5\%$

AIR CONSULTING & ENGINEERING, INC. PYROMETER CALIBRATION

DATE 7-10-90

PYROMETER NUMBER METER BOX #1

SOURCE (SPECIFY)	GLASS THERMOMETER WITH NBS MERCURY (°F)	PYROMETER (°F)	DEGREE DIFFERENCE	PERCENT DIFFERENCE
ICE BATH	32°	33°	1	.2%
AMBIENT	94°	96°	2	.4%
HOT OVEN	800°	800°	0	0

FDER - MAXIMUM 5° DIFFERENCE

EPA $\left[\frac{(\text{REF. TEMP. °F} + 460°) - (\text{PYROMETER TEMP. °F} + 460°)}{\text{REF. TEMP. °F} + 460°}\right] 100 \leq 1.5\%$

CALIBRATED BY: Larry J. Wurts

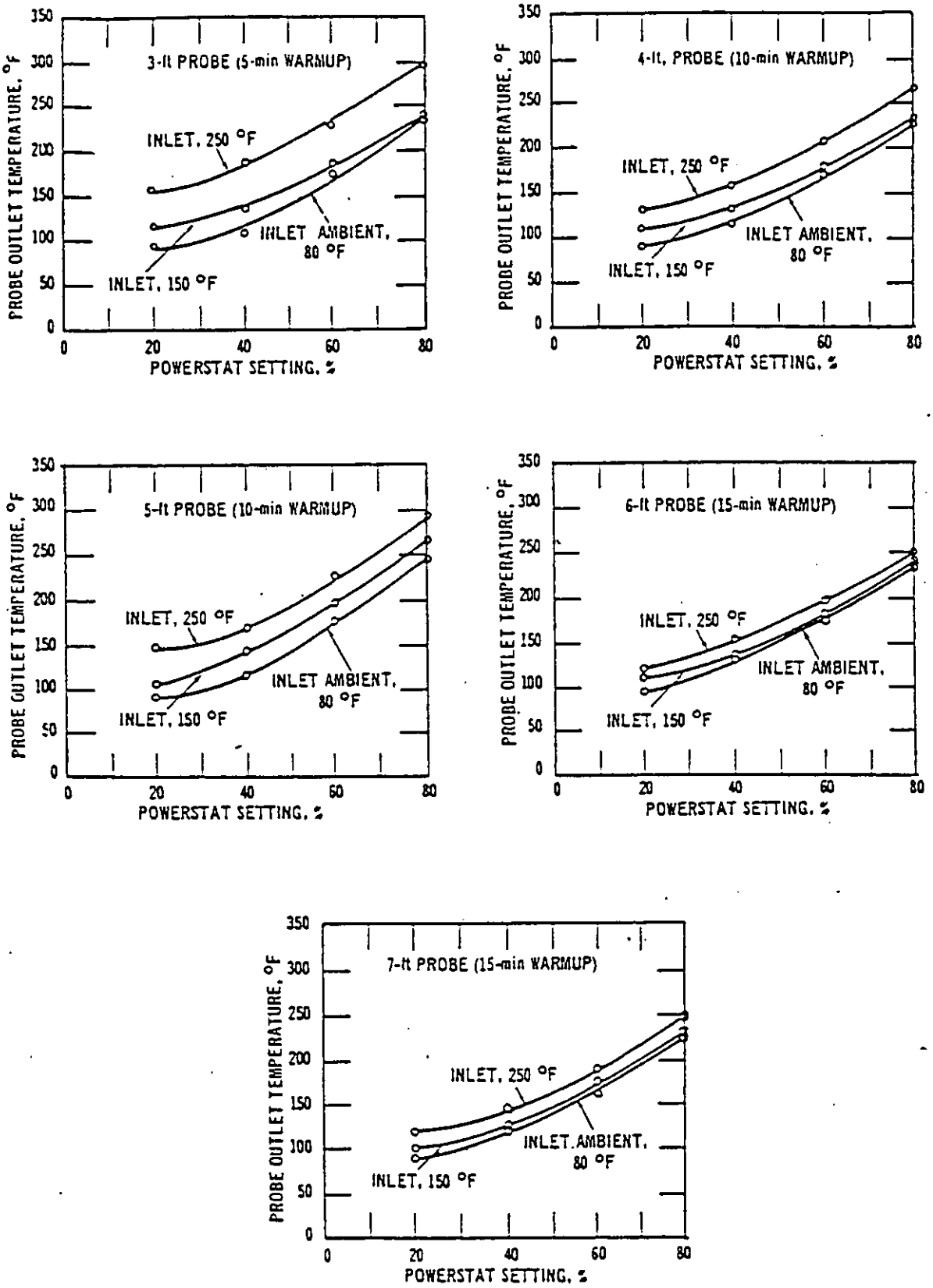

NOTE: Flow rate held constant at 0.75; 50% change in flow rate has little effect on probe temperature.

Probe temperatures.

AIR CONSULTING AND ENGINEERING, Inc.

SAMPLE RECOVERY AND CHAIN OF CUSTODY

PLANT NAME Sugar Growers TEST DATE 12-5-90
SOURCE NAME No. 2 Boiler SAMPLE RECOVERED BY S. Neck
TYPE OF SAMPLE P.M. PARTICULATE ANALYSES BY S. Neck

SAMPLE RECOVERY

RUN NO.	CONTAINER NO.	LIQUID LEVEL MARKED	COLOR	COMMENTS
1	P.W	✓	MED. ~~BLK~~	
	2846		BLK	
2	PW	✓	MED	
	2847		BLK	
3	PW	✓	LIGHT	
	2848		GREY	
ACETONE / WATER BLANK (CIRCLE)				
FILTER BLANK	2899			

SILICA GEL

RUN NO.	CONTAINER NO.	FINAL WT. (g)	INIT. WT. (g)	NET WT. (g)	COLOR
1	24	210.1	200.0	10.1	OK
2	73	210.9	200.0	10.9	O.K
3	54	211.0	200.0	11.0	O.K.
			200.0		
			200.0		
			200.0		
			200.0		
			200.0		

APPENDIX E

PRODUCTION RATE CERTIFICATION

BOILER OPERATION PARAMETERS

PLANT Sugar Cane Growers Coop

BOILER NUMBER 5

DATE 12-5-90 RUN NUMBER 1

OIL METER FACTOR 1.0

STEAM INTEGRATOR FACTOR 2500

SCRUBBER(S) PRESS.DROP 5, 5
SCRUBBER(S) GPM _____, _____
SCRUBBER(S)H2O LEVEL _____, _____
Ph(if applicable) _____, _____

OPERATOR SIGNATURE N.G.

INITIAL INTEGRATOR 860937

FINAL INTEGRATOR 861062

TIME	OIL	STEAM			FEEDWATER	
	METER READING	LBS.FLOW	TEMP.	PRESSURE	TEMP.	PRESSURE
0744	55530	168000	580	425	260	600
8:04		175000	580	430	260	600
8:24		175000	580	430	260	600
8:44		175000	580	425	260	600
9:04		175000	580	430	260	600
9:24		175000	580	430	260	600
932	55760	175000	580	430	260	600

BOILER OPERATION PARAMETERS

PLANT Sugar Cane Growers Co of FL. BOILER NUMBER 5

DATE 12-5-90 RUN NUMBER 2 OIL METER FACTOR 1

STEAM INTEGRATOR FACTOR 2500 SCRUBBER(S) PRESS.DROP ____, ___

SCRUBBER(S) GPM _____, _____

OPERATOR SIGNATURE _____ SCRUBBER(S)H2O LEVEL _____, ____

Ph(if applicable) _____, _____

INITIAL INTEGRATOR 861090 FINAL INTEGRATOR 861214

TIME	OIL	STEAM			FEEDWATER	
	METER READING	LBS.FLOW	TEMP.	PRESSURE	TEMP.	PRESSURE
956	55810	175000	580	430	260	600
10:16		170000	580	425	260	600
1036		175000	580	430	260	600
10:56		175000	580	430	260	600
11:16		170000	580	430	260	600
1134	56140	170000	580	425	260	600

BOILER OPERATION PARAMETERS

PLANT Sugar Cane Growers Co-op BOILER NUMBER 5

DATE 12-5-90 RUN NUMBER 3 OIL METER FACTOR 1

STEAM INTEGRATOR FACTOR 2500 SCRUBBER(S) PRESS.DROP ____,___
SCRUBBER(S) GPM _____,_____

OPERATOR SIGNATURE _____ SCRUBBER(S)H2O LEVEL _____,____
Ph(if applicable) _____,_____

INITIAL INTEGRATOR 861248 FINAL INTEGRATOR 861380

TIME	OIL	STEAM			FEEDWATER	
	METER READING	LBS.FLOW	TEMP.	PRESSURE	TEMP.	PRESSURE
12:13	6220	170000	580	425	260	600
12:33		170000	580	420	260	600
12:53		170000	580	420	260	600
1:13		175000	580	430	260	600
1:33		170000	580	420	260	600
1:53		170000	580	420	260	600
2:13	6540	175000	580	420	260	600
2:12						

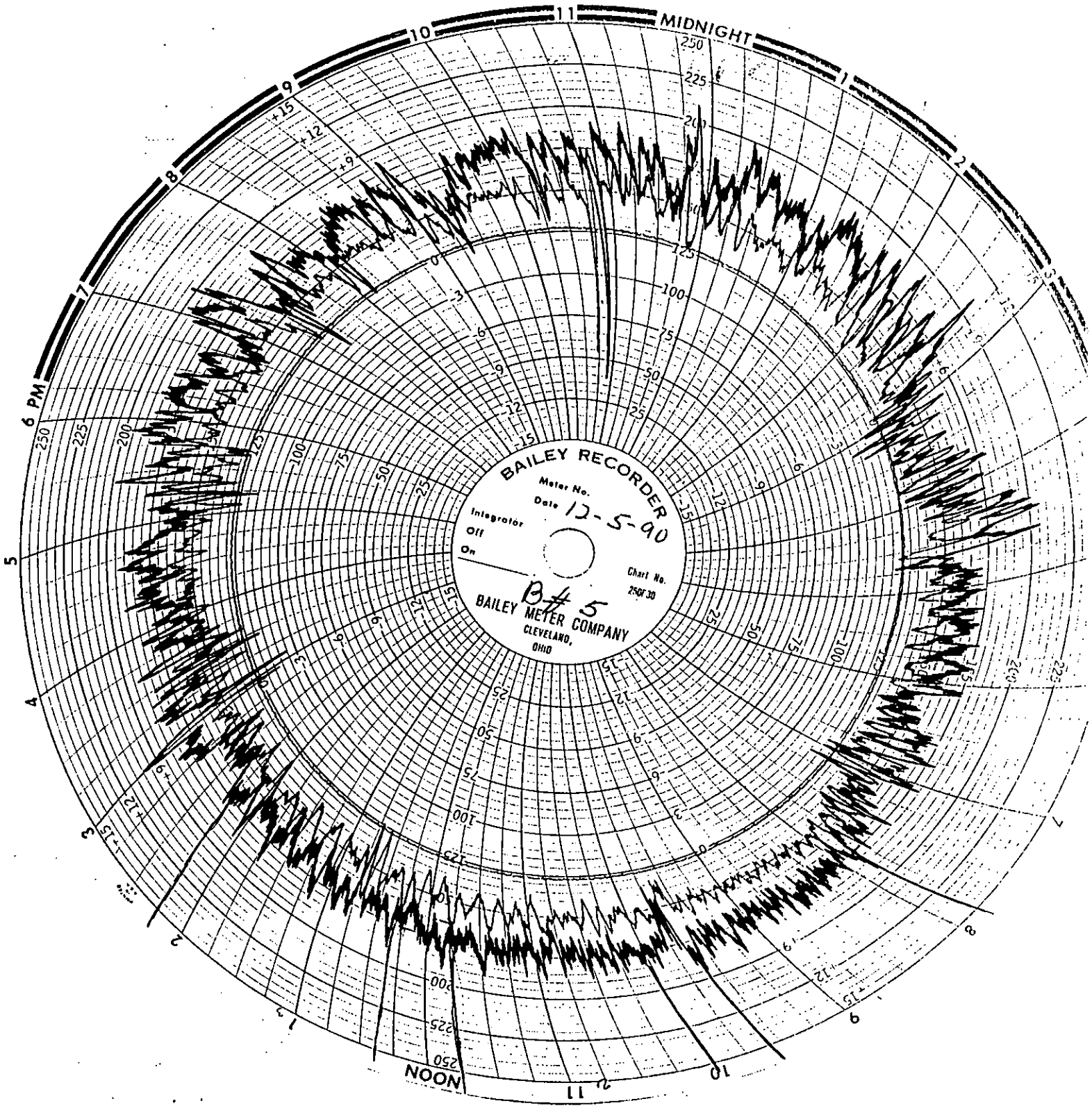
BAILEY RECORDER
Meter No.
Date 12-5-90
Integrator
Off
On
Chart No.
250F30
B#5
BAILEY METER COMPANY
CLEVELAND, OHIO
MIDNIGHT
NOON
6 PM

APPENDIX F

PROJECT PARTICIPANTS

PROJECT PARTICIPANTS

ACEI:	
STEPHEN L. NECK,P.E.	FIELD TESTING REPORT PREPARTION
GERARD GAUTHREAUX	FIELD TESTING
SCGCOF:	
JOSE ALVEREZ	PROJECT COORDINATOR
BLAS MARIN	TEST COORDINATOR
PALM BEACH COUNTY:	
AJAYA K. SATYAL	TEST OBSERVER
JEFF KOERNER	TEST OBSERVER