Note: This is a reference cited in *AP 42, Compilation of Air Pollutant Emission Factors, Volume I Stationary Point and Area Sources.* AP42 is located on the EPA web site at www.epa.gov/ttn/chief/ap42/

The file name refers to the reference number, the AP42 chapter and section. The file name "ref02_c01s02.pdf" would mean the reference is from AP42 chapter 1 section 2. The reference may be from a previous version of the section and no longer cited. The primary source should always be checked.

AP42 Section 1.6

Reference: 37

Title: Source Emission Testing of the Wood-fired Boiler #3 Exhaust at Georgia Pacific, Fort Bragg, California,

Performed for the Timber Association of California, Galston Technical Services,

February 1991.

FEBRUARY, 1991

GALSON PROJECT S9-072.GP

Pb 9.90

File CP
#15 Copy

SOURCE EMISSION TESTING OF THE WOOD-FIRED BOILER #3 EXHAUST

1.6
37

AT

GEORGIA PACIFIC
FORT BRAGG, CALIFORNIA

Performed for:
The Timber Association of California
1311 I Street, Suite 100
Sacramento, CA 95814

Galson
Technical Services

Galson
Technical Services

Galson Technical Services, Inc.
2116 Berkeley Way
Berkeley, CA 94704
Tel: (415) 848-0389
FAX: (415) 848-0838

February 20, 1991

Mr. Steve Petrin
The Timber Association of California (TAC)
1311 I Street, Suite 100
Sacramento, CA 95814

Re: Source Emission Test Report
Georgia Pacific, Fort Bragg, CA - TAC Site #6
Wood-Fired Boiler #3
Galson Project #S9-072.GP

Dear Steve:

Enclosed are the results of the source emission testing performed on the wood-fired boiler #3 at the Georgia Pacific facility in Fort Bragg, California. Testing was conducted by Galson Technical Services, Inc. from July 13 to 18, 1990 and from November 3 to 4, 1990 to determine emissions of the following pollutants:

- Formaldehyde/Acetaldehyde
- Benzene
- Particulate matter
- Metals (12; including hexavalent chromium)
- Polycyclic Aromatic Hydrocarbon (PAHs; 16 compounds)
- Crystalline Silica

In addition, exhaust gas carbon monoxide (CO), total hydrocarbon (THC), oxygen (O_2), and carbon dioxide (CO_2) concentrations were continuously monitored throughout the testing.

The primary purpose of the test program was to develop emission data in support of Georgia Pacific's AB2588[1] reporting requirements. Georgia Pacific was designated by the Timber Association of California (TAC) and the California Air Resources Board (CARB) as one of the sites to be tested for the pooled testing program. Emission data collected at this site will be utilized to satisfy the AB2588 reporting requirements of other similar facilities which are participating in the program.

Art Owens and Dyarl Burns of Georgia Pacific were present to coordinate testing activities with the boiler operations. Chuck Sassenrath, P.E., representing the TAC, was also present to observe the testing. No representatives of the Mendocino County Air Pollution Control District (MCAPCD) or CARB were present.

---

1. Air Toxics "Hot Spots" Information and Assessment Act of 1987.

Source Description/Operating Conditions:

The Georgia Pacific facility is equipped with three wood-fired boilers. Galson tested the Riley Stoker wood-fired boiler (#3), which was installed in 1982. The boiler has a rated capacity of 140,000 lbs/hr of steam (at 500 psi and 725 °F). However, the boiler is normally operated at 60,000 lbs/hr of steam, at 400 psi and 700 °F, and is typically fired with redwood bark.

Boiler exhaust gases are passed through a wet scrubber to control particulate emissions and are then discharged to the atmosphere through a 66-inch diameter stack, approximately 70 feet above grade.

During the test program, boiler steam production ranged from 109,000 to 126,000 lbs/hr. In July, the boiler was fired with fir during Tests 1, 2 and 3 and redwood during Test 4. Redwood bark was used to fire the boiler during the November testing. Boiler operating data, including furnace draft, fuel feed rates, and the pressure drop across the wet scrubber were logged by plant personnel during the testing. Steam flow rates, feedwater flow rates and steam drum levels were continuously monitored on strip chart records by the facility. These data are presented in Attachment I.

Test Methods:

Testing was performed in accordance with California Air Resources Board (CARB) and Environmental Protection Agency (EPA) methods, as summarized below:

Pollutant	Method
Formaldehyde/Acetaldehyde	CARB 430
Benzene	CARB 410A
Metals (11)[2]/Particulate	EPA Draft Method[3]/CARB 5
Particulate	CARB 5
Hexavalent Chromium	CARB 425 Draft[4]
PAH (16 Priority Compounds)	CARB 429
Crystalline Silica	CARB 5 (Modified)/NIOSH 7500
CO, THC, CO_2, O_2	CARB 100

In July the boiler emissions were tested for metals, particulate, formaldehyde, acetaldehyde, benzene and crystalline silica. Further testing was not conducted in July due to problems encountered with an adjacent emission plume descending on the test platform. In November the boiler was tested for hexavalent chromium, PAH's and particulate emissions.

Testing for each parameter was performed in triplicate, with the exception of the CO, THC, CO_2 and O_2 concentrations, which were monitored continuously during all tests.

---

2. Arsenic, beryllium, cadmium, chromium, copper, lead, manganese, mercury, nickel, selenium, and zinc.
3. Dated August 28, 1989.
4. Dated July 10, 1990.

In July, particulate emissions were determined in accordance with CARB Method 5 procedures using the front-half fraction of the metals sample (i.e., filter and rinse) prior to performing metals analyses. In addition, a single, condensable particulate sample was collected in the back-half fraction of the crystalline silica sampling train (test 3) and was analyzed per CARB Method 5 (section 4.3.1). The condensable particulate emissions were assumed to be constant throughout the metals testing.

In November, a single front-half and condensable particulate sample was collected and analyzed per CARB Method 5. These particulate emissions data were assumed to be constant throughout the PAH and hexavalent chromium testing, conducted in November.

Sampling ports were located in the 66-inch diameter stack at a point approximately 40 feet (7.3 diameters) downstream of a flow disturbance and approximately 15 feet (2.7 diameters) upstream of the stack discharge. A preliminary velocity/cyclonic flow traverse of the stack was conducted in accordance with CARB Methods 1 and 2, and confirmed the acceptability of the test site (i.e., cyclonic flow was not present). The cyclonic flow measurements, traverse point locations and a stack drawing are presented in Attachment II.

All test equipment was calibrated either prior to, or during use in the field. The CO, THC, CO_2, and O_2 monitors were calibrated with cylinder gases of known concentration immediately before and after each test period. The dry gas meter/orifice modules were calibrated immediately prior to and following the test program. Pitot tubes were also calibrated prior to use in the field and were visually inspected for damage during the test program. All thermometers, thermocouples, and temperature read-outs are routinely calibrated at six-month intervals, or immediately following any damage/repair. A post-test QA check of the thermocouples was also performed. Calibration data are presented in Attachment IV.

Further details of the sampling and analytical techniques are presented in Attachment III.

Results and Discussion:

Test results are summarized in Tables 1 through 6 and are discussed below. Supporting field data and calculations are presented in Attachment V. Emission data is expressed in concentration and emission rate units in Attachment V. Laboratory data are presented in Attachment VI.

Formaldehyde/Acetaldehyde and Benzene Emissions:

As presented in Table 1, formaldehyde and acetaldehyde concentrations averaged 0.417 ppm and 0.132 ppm at 12% CO_2, respectively. Benzene emission concentrations averaged 1.27 ppm at 12% CO_2. The moisture content of the stack gas was not measured during these tests, but was calculated based on saturated conditions. The stack gas was saturated or nearly saturated during all the tests where the moisture content was validated. The calculated moisture content of the of the stack is slightly higher than was measured during other tests due to slightly higher stack tempertures.

Particulate and Metals Emissions:

Referring to Table 3, total particulate emissions collected in July averaged 0.032 gr/dscf at 12% CO_2. Condensable particulate was collected in the crystalline silica sampling train and accounted for approximately 30% of the total particulate emissions.

in July, front-half particulate emissions measured during Test 4 were approximately 60% higher than those observed during Tests 1 and 2, which may be related to the different fuel used during Test 4 (ie; redwood as opposed to fir). The results of the particulate test conducted in November (Test 4N), which was also tested while the boiler was fueled with redwood sawdust, indicate that front-half particulate concentrations are approximately 50% greater for redwood than for fir.

Total particulate emissions collected in November measured 0.0274 gr/dscf at 12% CO_2, which is comparable to the July test results. However, the condensable fraction contributed less than 4% to the total particulate emissions in November, compared to 30% during July. This may be due to using a fir fuel in July and redwood in November, but this correlation does not necessarily imply cause. The front-half particulate data measured in July were used in calculating the hexavalent and total chromium emissions rates presented in Table 5.

The metals data presented in Table 3 are blank-corrected. The metals with the highest average emissions (relative to front-half particulate) were: zinc (6,200 ug/gm), manganese (1,990 ug/gm), arsenic (565 ug/gm), copper (558 ug/gm) and lead (302 ug/gm). Beryllium and selenium were not detected.

The blank sample contained some of the metals of interest (i.e., chromium, lead, manganese, and zinc). However, the levels in the blank were low with respect to average sample quantities (i.e., less than 35 percent). The source of the blank-contained metals is not known, although it is believed to be attributable to background sources (e.g., the filter, reagents, solvents) and/or contamination.

Hexavalent and Total Chromium Emissions:

Referring to Table 5, hexavalent chromium was not detected during any of the tests. Total chromium however, was detected in all three tests and averaged 74 ug/gm of front-half particulate. The particulate quantities in Table 5 were calculated from the particulate grain loading measured during the particulate Test #4N, corrected for sampling volumes and CO_2 concentrations.

PAH Emissions:

As presented in Table 6, only two compounds that are identified as carcinogens[5] were detected. These were benzo(a)anthracene which was detected in Test 2 and benzo(b)fluoranthene detected in Test 3.

Referring to the laboratory results (Attachment VI), the Test 1 sample detection limits were ten times higher than the other samples, because a 10:1 dilution was required to quantify all compounds.

A problem occurred with the Test 2 sample which was mistakenly concentrated to dryness during extraction causing a low recovery of the surrogate standard (2-fluorobiphenyl). This potentially introduces a negative bias, where true concentrations may be higher than the concentrations reported. However, the compounds detected in Test 2 are comparable in magnitude to concentrations measured in Test 3.

---

5 As identified in Appendix A-1 of the AB2588 Emission Inventory and Criteria Guidelines

Relatively high levels of naphthalene were determined to be present in all three samples as well as the field-blank[6]. The amount of naphthalene present in the field-blank was higher than in the Test 2 sample. The naphthalene data should therefore be interpreted with caution. Although the source of the naphthalene is not known, it is suspected to be an impurity and/or a by-product of the break-down of the XAD-2 resin[7]. Blank quantities of the other PAH compounds were either below detection limits, or low (i.e., less than 10 percent) relative to sample quantities.

Crystalline Silica Emissions:

As presented in Table 7, quartz was measured at a concentration of 2.4 mg/gm of front-half particulate. Cristobalite and tridymite emissions were below detection limits during the test.

CO and THC Emissions:

CO and THC data are presented in Table 1 through 7. The CO emission concentrations ranged from 580 to 2580 ppm, and THC (as methane) ranged from 16 to 188 ppm. Emission concentrations of CO were significantly lower during the November test program than during testing in July. The highest THC concentrations correspond to the highest CO concentrations, and the lowest THC concentration correlates with the lowest CO concentration, which is to be expected as the combustion efficiency fluctuates.

General:

Other than noted, no sampling problems were encountered during the test program. Isokinetic sampling conditions were maintained during the particulate, metals, hexavalent chromium, PAH, and crystalline silica tests, with isokinetic percentages within the allowable 100 ± 10% during all tests (refer to Attachment V). Calibrations of the monitors performed before and after each test period were in agreement (within 3 percent).

It has been a pleasure working with you and with the plant personnel on this project. If you have any questions, or need additional information, please do not hesitate to call.

Sincerely,
GALSON TECHNICAL SERVICES, INC.

Guy Worthington
ENVIRONMENTAL SCIENTIST
ASSISTANT DEPARTMENT MANAGER

Approved by:

David Galson, P.E.
DEPARTMENT MANAGER

rev: dg

---

6. The field blank sample contained 41 µg of naphthalene, while the Tests 1, 2, and 3 samples contained between 5.5 and 1200 µg per sample (refer to the laboratory data presented in Attachment VI).

7. XAD is 1,4-divinyl benzene; 1,2-divinyl benzene (an impurity) can react to form naphthalene.

Attachments:

Tables:

Table 1: Summary of Test Results - Formaldehyde, Acetaldehyde Test Data
Table 2: Summary of Test Results - Benzene Test Data
Table 3: Summary of Test Results - Particulate/Multiple Metals Test Data
Table 4: Summary of Test Results - Particulate Test Data (11/90)
Table 5: Summary of Test Results - Hexavalent and Total Chromium Test Data
Table 6: Summary of Test Results - PAH Test Data
Table 7: Summary of Test Results - Crystalline Silica Test Data

Attachments:

Attachment I: Process Operating Data
Attachment II: Stack Configuration And Traverse Point Locations
Attachment III: Sampling And Analytical Methods
Attachment IV: Calibration Data
Attachment V: Field Data And Calculations
Attachment VI: Laboratory Data
Attachment VII: Project Personnel

File: 72.GP Report
Disk: S9-072.GP

Table 1: Summary of Test Results - Georgia Pacific Formaldehyde and Acetaldehyde Test Data

Test ID	5	6	7	Average
Date	7/18/90	7/18/90	7/18/90	
Test Times	0900-0945	1005-1050	1111-1156	
Steam Flow (lbs/hr)	114,000	116,000	117,000	115,667
Flow (ACFM)	103,733	102,933(a)	102,133	102,933
Stack Gas Temperature (°F)	161	162(a)	163	162
Stack Gas Moisture Content, % (b)	32.6	33.4	34.2	33
Flow (DSCFM)	60,186	58,950(a)	57,713	58,950
Oxygen (%, dry basis)	10.0	10.3	9.4	9.9
CO2 (%, dry basis)	11.0	11.0	11.8	11.3
Nitrogen (%, dry basis)	78.9	78.6	78.6	78.7
Flow (DSCFM, @12% CO2)	55,171	54,038	56,751	55,320
CO (ppm, dry basis)	1,490	1,140	1,550	1,393
THC (ppmv, as methane, dry)	43	39	48	43
Formaldehyde Emissions:				
(ppm)	0.224	0.770	0.165	0.386
(ppm@12%CO2)	0.244	0.840	0.168	0.417
(mg/dscm@ 12%CO2)	0.305	1.048	0.209	0.521
Acetaldehyde Emissions:				
(ppm)	0.112	0.207	0.046	0.122
(ppm@12%CO2)	0.122	0.226	0.047	0.132
(mg/dscm@12%CO2)	0.224	0.414	0.086	0.241

Note: Mendocino County APCD defines standard conditions as 68°F temperature and 1 atmosphere pressure.
Refer to Attachment V for detailed calculations and results presented in concentration and mass emission rate units.
Data are blank-corrected.

(a) Average values, based on Test 5 and 7 results.
(b) Calculated based on saturated conditions at stack temperature and pressure.

Table 2: Summary of Test Results - Georgia Pacific
Benzene Test Data

Test ID	5	6	7	Average
Date	7/18/90	7/18/90	7/18/90	
Test Times	0900-0945	1005-1050	1111-1156	
Steam Flow (lbs/hr)	114,000	116,000	117,000	115,667
Flow (ACFM)	103,733	102,933(a)	102,133	102,933
Stack Gas Temperature (°F)	161	162(a)	163	162
Stack Gas Moisture Content, % (b)	32.6	33.4	34.2	33.4
Flow (DSCFM)	60,186	58,950(a)	57,713	58,950
Oxygen (%, dry basis)	10.0	10.3	9.4	9.9
CO2 (%, dry basis)	11.0	11.0	11.8	11.3
Nitrogen (%, dry basis)	78.9	78.6	78.6	78.7
Flow (DSCFM, @12% CO2)	55,171	54,038	56,751	55,320
CO (ppm, dry basis)	1,490	1,140	1,550	1,393
THC (ppmv, as methane, dry)	43	39	48	43
Benzene (ppm)	1.50	1.70	0.30	1.17
Benzene (ppm@12%CO2)	1.64	1.85	0.31	1.27
Benzene (µg/dscm@12%CO2)	5,308	6,016	990	4,105

Note: Mendocino County APCD defines standard conditions as 68°F temperature and 1 atmosphere pressure.
Refer to Attachment V for detailed calculations and results presented in concentration and mass emission rate units.
Data are blank-corrected.

(a) Average values, based on Test 5 and 7 results.

(b) Calculated based on saturated conditions at stack temperature and pressure.

Table 3: Summary of Test Results - Georgia Pacific Particulate/Multiple Metals Test Data

Test ID	1	2	4	Average
Date	7/12/90	7/12/90	7/16/90	
Test Times	1027-1251	1452-1716	1005-1228	
Steam Flow (lb/hr.)	116,000	112,000	109,000	112,333
Flow (ACFM)	83,726	77,323	111,126	90,725
Stack Gas Temperature (°F)	154	152	158	155
Stack Gas Moisture Content (%)	26.73	25.82	28.62	27.06
Flow (DSCFM)	53,513	50,245	68,581	57,446
Oxygen (%, dry basis)	7.9	8.2	9.9	8.7
CO2 (%, dry basis)	13.2	12.8	11.4	12.5
Nitrogen (%, dry basis)	78.9	79	78.7	78.9
Flow (DSCFM, @12% CO2)	58,864	53,595	65,152	59,204
Volume sampled (ft3)	71.43	66.73	91.61	
CO (ppmv, dry basis)	1,550	1,380	2,580	1,837
THC (ppmv, as methane, dry)	79	48	88	72
Front-half (FH) PM (mg)	93.9	83.4	161.7	113
FH PM (gr/dscf, @12%CO2)	0.0184	0.0181	0.0287	0.022
BH PM (gr/dscf, @12%CO2)	0.0105	0.0105	0.0105	0.0105(a)
Total PM (gr/dscf, @12%CO2)	0.0289	0.0286	0.0392	0.0322
Metals Emissions (µg/gm of FH PM)				
Arsenic	714	875	105	565
Beryllium	[11]	[12]	[6]	0
Cadmium	[11]	[12]	12	8
Chromium	75	48	99	74
Copper	586	612	476	558
Lead	266	276	365	302
Manganese	3,410	1,200	1,360	1,990
Mercury	16	23	15	18
Nickel	[85]	[96]	74	55
Selenium	[110]	[120]	[62]	0
Zinc	6,270	6,700	5,620	6,200

Note: Mendocino County APCD defines standard conditions as 68°F and 1 atmosphere.
Refer to attachment V for detailed calculation of results in concentration and mass emission units.
Data are blank-corrected.

[ ] Indicates that sample quantities were below the detection limit.
Average values are indicated as zero if all three samples are below the detection limit; non-detectable quantities are counted as 1/2 of the detection limit if any of the samples contain detectable quantities.

(a) BH PM data were derived from the analysis of the back-half of the Test 3 (crystalline silica) sampling train (one sample).

Table 4: Summary of Test Results - Georgia Pacific Particulate Emission Test Data (11/90)

Test ID	#4 N
Date	11/4/90
Test Times	1350-1455
Steam Flow (lbs/hr)	115,500
Flow (ACFM)	101,493
Stack Gas Temperature (°F)	155
Stack Gas Moisture Content (%)	28.2
Flow (DSCFM)	63,013
Oxygen (%, dry basis)	9.9
CO2 (%, dry basis)	10.7
Nitrogen (%, dry basis)	79.3
Flow (DSCFM, @12% CO2)	56,187
Volume Sampled (DSCF)	40.55
CO (ppmv, dry basis)	580
THC (ppmv, as methane, dry)	16
Front-half (FH) PM (mg)	62.2
FH PM (gr/dscf, @ 12% CO2)	0.0265
BH PM (gr/dscf, @ 12% CO2)	0.0009
Total PM (gr/dscf, @ 12% CO2)	0.0274

Note: Mendocino County APCD defines standard conditions as 68° F and 1 atmosphere.
Refer to Attachment V for detailed calculations and results in concentration and mass emission rate units
Data are blank-corrected.

Table 5: Summary of Test Results - Georgia Pacific
Hexavalent and Total Chromium Test Data

Test ID	Run #1	Run#2	Run #3	Average
Date	11/3/90	11/3/90	11/4/90	
Test Times	0958-1334	1538-1945	0925-1245	
Steam Flow (lb/hr)	124,500	126,000	117,000	122,500
Flow (ACFM)	106,459	108,963	108,957	108,126
Stack Gas Temperature (°F)	155	157	157	156
Stack Gas Moisture Content (%)	26.0	28.0	29.3	27.8
Flow (DSCFM)	68,145	67,750	66,489	67,461
Oxygen (%, dry basis)	9.9	9.4	10.2	9.8
CO2 (%, dry basis)	11.1	11.1	10.2	10.8
Nitrogen (%, dry basis)	78.9	79.4	79.5	79.3
Flow (DSCFM, @12% CO2)	63,034	62,669	56,516	60,740
Volume Sampled (DSCF)	128.88	128.35	127.69	
CO (ppm, dry basis)	980	860	910	917
THC (ppm, as methane, dry)	54	41	23	39
Front-half (FH) PM, gm (a)	205	204	187	199
Metals Emissions (µg/gm of FH PM)				
Hexavalent Chromium	[146]	[147]	[161]	0
Total Chromium	132	74	16	74

Note: Mendocino County APCD defines standard conditions as 68°F and 1 atmosphere.
Refer to Attachment V for detailed calculations and results in concentration and mass emission rate units.
Data are blank-corrected.
[ ] Indicates sample quantities were below the detection limit.
Average values are indicated as zero if all three samples are below the detection limit; non-detectable quantities are counted as 1/2 of the detection limit, if any of the samples contain detectable quantities.
(a) FH particulate quantities were pro-rated, based on the Test 4 (11/4/90) particulate emission data.

Table 6: Summary of Test Results - Georgia Pacific Polycyclic Aromatic Hydrocarbon (PAH) Test Data

Test ID Date Test Times	Run #1 (a) 11/3/90 0955-1330	Run#2 (b) 11/3/90 1534-1945	Run #3 11/4/90 0920-1255	Average
Steam Flow (lbs/hr)	124,500	126,000	117,000	122,500
Flow (ACFM)	99,130	107,824	110,775	105,910
Stack Gas Temperature (°F)	158	159	158	158
Stack Gas Moisture Content (%)	28.71	29.58	29.66	29.32
Flow (DSCFM)	60,810	65,289	67,084	64,394
Oxygen (%, dry basis)	9.9	9.4	10.2	9.8
CO2 (%, dry basis)	11.1	11.1	10.2	10.8
Nitrogen (%, dry basis)	79	79.5	79.6	79.4
Flow (DSCFM, @12% CO2)	56,249	60,392	57,021	57,888
Volume Sampled (DSCF)	110.82	122.82	123.9	
CO (ppmv, dry basis)	980	860	910	917
THC (ppmv, as methane, dry)	54	41	23	39
Micrograms per DSCM at 12% Carbon Dioxide				
Naphthalene	399	[13]	130	179
Acenaphthylene	55.1	7.15	8.72	23.7
Acenaphthene	4.13	0.65	0.91	1.90
Fluorene	12.4	2.21	2.05	5.55
Phenanthrene	62.0	14.3	12.1	29.5
Anthracene	3.79	0.72	0.81	1.77
Fluoranthene	20.3	6.22	5.36	10.6
Pyrene	13.1	4.04	3.35	6.83
Benzo(a)Anthracene (c)	[3.4]	0.37	[0.34]	0.75
Chrysene	[3.4]	[0.31]	[0.34]	0
Benzo(b)Fluoranthene (c)	[3.4]	[0.31]	0.74	0.86
Benzo(k)Fluoranthene (c)	[3.4]	[0.31]	[0.34]	0
Benzo(a)Pyrene (c)	[3.4]	[0.31]	[0.34]	0
Benzo(ghi)Perylene	[3.4]	[0.31]	[0.34]	0
Dibenz(ah)Anthracene (c)	[3.4]	[0.31]	[0.34]	0
Indeno(123cd)Pyrene (c)	[3.4]	[0.31]	[0.34]	0
Total PAH (c)	[3.4]	0.37	0.74	~~0.94~~ 1.61

Note: Mendocino County APCD defines standard conditions as 68° F and 1 atmosphere.
Refer to Attachment V for detailed calculations and results in concentration and mass emission rate units.
Data are blank-corrected.

[ ] Indicates sample quantities were below the detection limit.
Average values are indicated as zero if all three samples are below the detection limit; non-detectable quantities are counted as 1/2 of the detection limit if any of the samples contain detectable quantities.

(a) A 10:1 dilution of the Test 1 sample was required to quantify all compounds.

(b) The Test 2 sample was inadvertantly concentrated to dryness during sample preparation, potentially biasing reported quantities downward.

(c) Total PAH consists of the six compounds identified as carcinogens in Appendix A-1 of the AB2588 Emissions Inventory and Criteria Guidelines.

Table 7: Summary of Test Results - Georgia Pacific Crystalline Silica Test Data

Test ID	3
Date	7/13/90
Test Times	0830-0920
Steam Flow (lbs/hr)	126,000
Flow (ACFM)	87,230
Stack Gas Temperature (°F)	154
Stack Gas Moisture Content (%)	27.4
Flow (DSCFM)	55,241
Oxygen (%, dry basis)	7.9
CO2 (%, dry basis)	13
Nitrogen (%, dry basis)	79.1
Flow (DSCFM, @12% CO2)	59,844
Volume Sampled (DSCF)	19.24
CO (ppmv, dry basis)	2,340
THC (ppmv, as methane, dry)	188
Front-half particulate (FH PM), mg	24.7 (a)
Silica Emissions (mg/gm of FH PM)	
Quartz	2.4
Cristobalite	[1]
Tridymite	[1]

Note: Mendocino County APCD defines standard conditions as 68°F and 1 atmosphere.
Refer to Attachment V for detailed calculations and results in concentration and mass emission rate units.

Data are blank-corrected.
[ ] Indicates sample quantities were below the detection limit.
(a) Based on the average grain loading observed during multiple metal Tests 1 and 2, conducted on 7/12/90, and the crystalline silica sample volume (ft3).

ATTACHMENT I: Process Operating Data

Table I: Summary of Process Operating Data

Test # - Date (Times)	Steam Load (lbs/hr)	Scrubber ΔP (in. H2O)	Fuel Feed %
PAH/Hex. Chromium Tests:			
1 - 11/3/90 (0955-1334)	124,500	13	67
2 - 11/3/90 (1534-1945)	126,000	13	70
3 - 11/4/90 (0920-1255)	117,000	14	67
Aldehyde Tests:			
5 - 7/18/90 (0900-0945)	114,000	11	74
6 - 7/18/90 (1005-1050)	116,000	11	82
7 - 7/18/90 (1111-1156)	117,000	12	83
Benzene Tests:			
5 - 7/18/90 (0900-0945)	114,000	11	75
6 - 7/18/90 (1005-1050)	115,000	11	82
7 - 7/18/90 (1111-1156)	117,000	12	83
Metals/Particulate Tests:			
1 - 7/12/90 (1027-1251)	116,000	10	44
2 - 7/12/90 (1452-1716)	112,000	10	44
4 - 7/16/90 (1005-1228)	109,000	11	76
Particulate			
4 - 11/4/90 (1350-1455)	115,500	13	60
Crystalline Silica			
3 - 7/13/90 (0830-0920)	126,000	10	53

Steam Flowrate Data
X 15,000

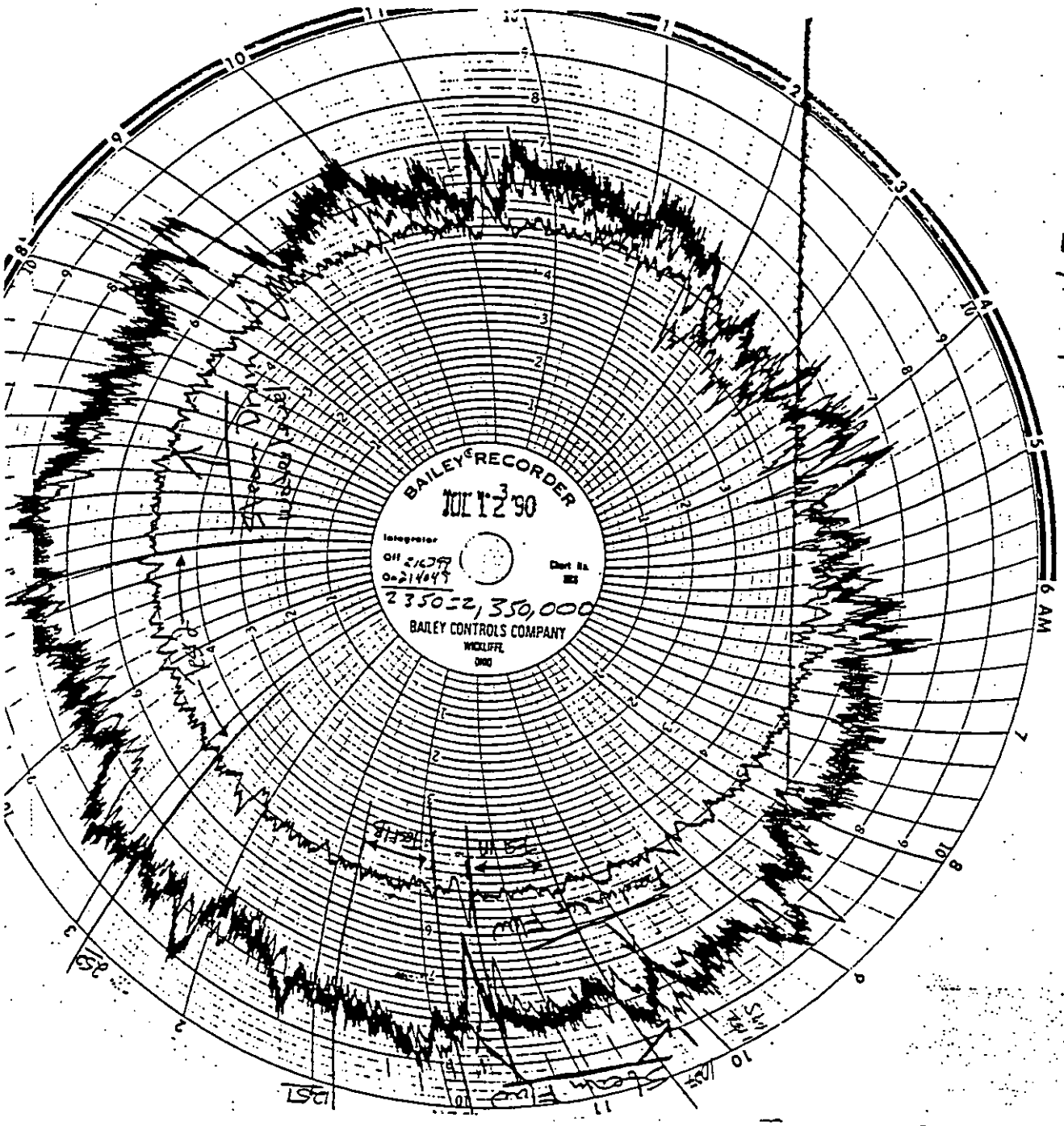

Boiler #3
7-12-90
G.P.
Fuel Brace

Steam Flowrate Data
X 15,000

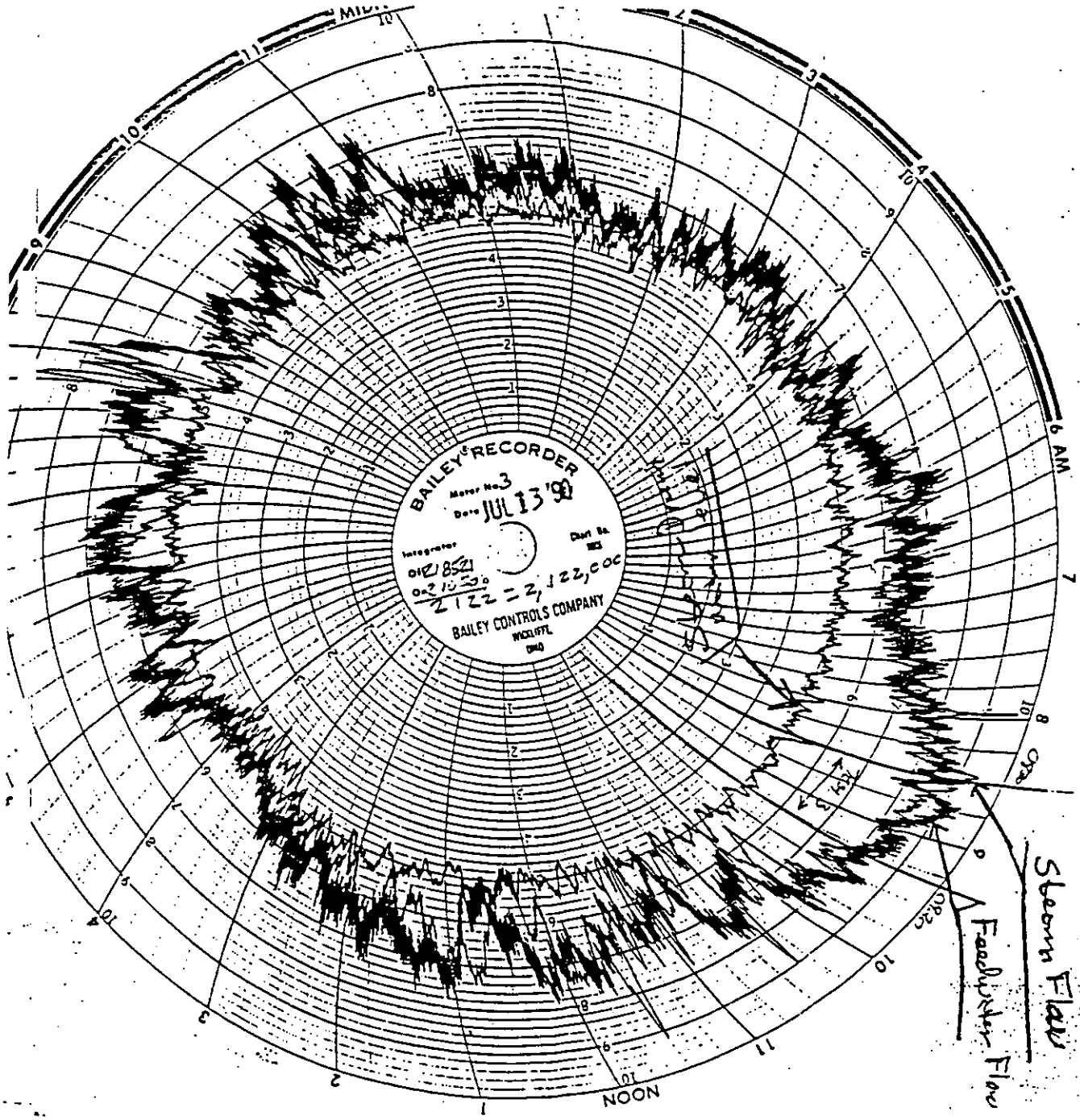

Boiler #3
7-13-90

Steam Flowrate Data
X 15,000

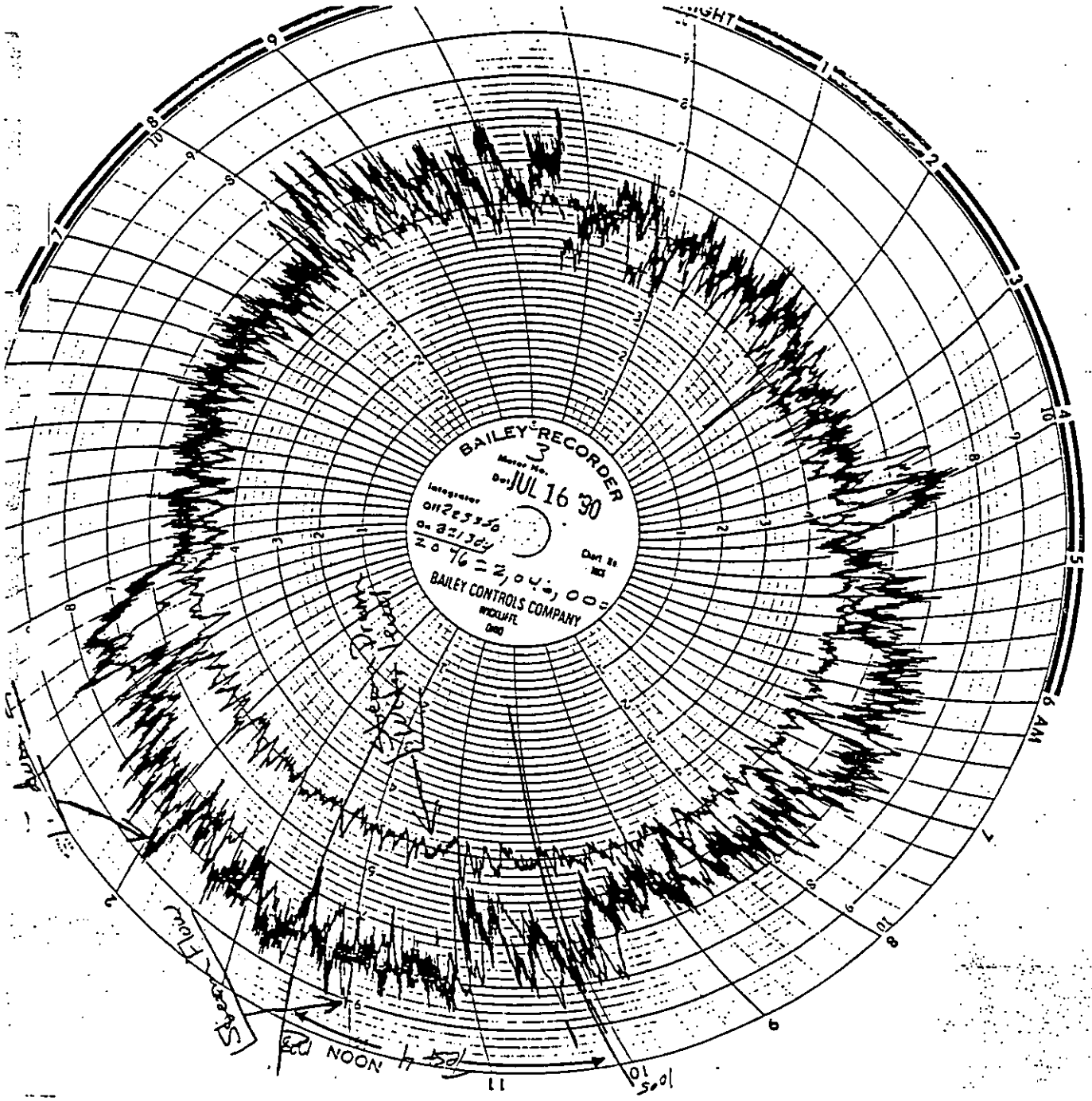

Boiler #3
7-16-90
G.P.

Steam Flowrate Data
X 15,000

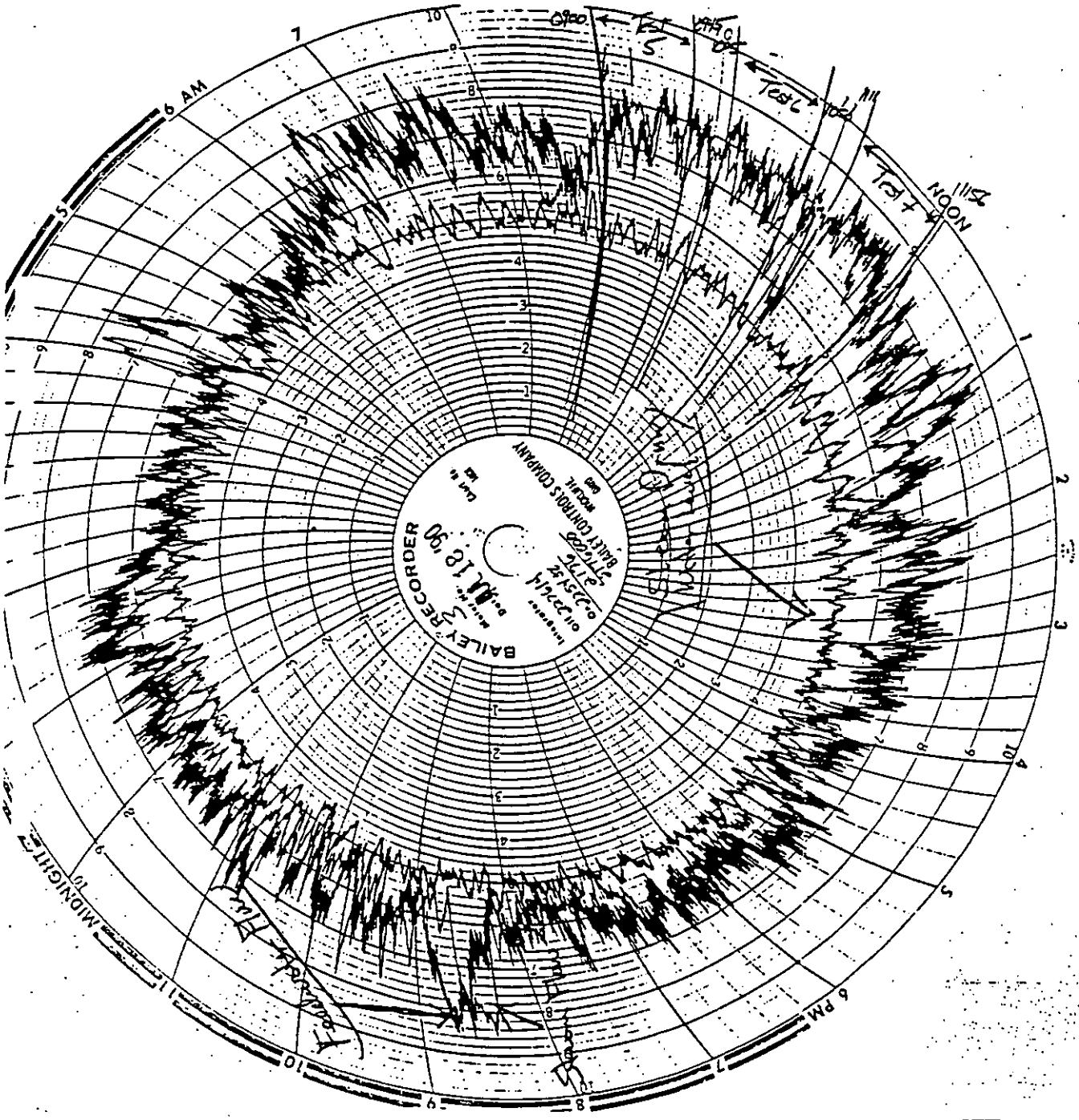

Boiler #3
7-18-90
G.P.

Record Data @ ~15 minute intervals 7/12/90

Boiler Operating Data

– Georgia Pacific, Unit 3

Time	Furnace Draft (in H2O) North	Furnace Draft (in H2O) South	Scrubber ΔP (in H2O)	Fuel Feed Auger (%) 1	2	3	4
2:00 AM	-.15	-.15	10	35	44	46	50
2:15 AM	-.30	-.30	10	33	40	46	50
2:30 AM	-.25	-.25	10	30	40	44	48
2:45 AM	-.20	-.10	10	30	40	38	45
3:00 AM	-.35	-.25	10	34	42	39	45
3:15 AM	-.20	-.15	10	35	43	48	52
3:30 AM	-.1	-.2	10	42	50	55	59
3:45 AM	-.1	-.2	10	42	48	52	57
1:00 PM	-.15	-.15	10	35	42	46	50
1:15 PM	-.25	-.20	10	34	42	46	52
1:30 PM	-.20	-.10	10	36	44	48	52
1:45 PM	-.20	-.30	10	36	44	45	48
2:00 PM	-.15	-.30	10	37	45	47	52
(lunch, and test)							
2:40 PM	-.1	-.1	10	37	45	45	51
2:55 PM	-.1	-.4	10	45	50	50	55
3:10 PM	-.2	-.2	10	40	41	49	50
3:25 PM	-.1	-.3	10	36	41	45	48
3:40 PM (335 Running Avg)	-.15 / -.15	-.1 / .1	9 / 9	29 / 28	39 / 39	45 / 46	50 / 51
3:55 PM	-.1	-.2	9	30	40	50	52
4:10 PM	-.2	-.3	10	30	36	49	57
4:25	2	3	10	30	45	5[illegible]	60
4:40	2	3	10	40	41	51	60
4:55	1	1	10	41	40	50	55
5:10	2	2	10	35	40	50	51

Record Data @ ~15 min. intervals 7/13/90

Boiler Operating Data

Georgia Pacific - Unit 3

Time	Furnace Draft (in. H_2O) North	Furnace Draft (in. H_2O) South	Scrubber ΔP (in. H_2O)	Fuel Feed Auger (%) 1	2	3	4
6:30 AM	-.30	-.10	10	48	52	62	68
6:45 AM	-.40	-.15	10	46	49	55	62
7:00 AM	-.30	-.20	10	50	52	56	63
7:15 AM	-.0	-.0	10	46	50	53	59
7:30	-.3	-.2	10	42	46	49	55

4/16/90

Time	M-S			1	2	3	4
10:20 AM	-.6	-.4	10	60	56	75	85
10:35 AM	-.4	-.2	10.5	58	58	73	79
10:50 AM	-.5	-.3	11.0	Plug	68	85	92
11:05 AM	-.4	-.6	11.5	75	77	95	101
11:20 AM	-.3	-.6	11.5	70	73	92	100
11:35 AM	-.5	-.7	11.5	72	75	95	100
11:50 AM	-.6	-.2	11.5	65	70	90	96
12:05 pm	-.4	-.2	11.0	48	56	74	80
12:20	-.4	-.1	11.0	62	65	88	96
12:35	-.3	-.2	11.0	45	52	74	76

Every 15 min (3)

~~Data~~ #3 - 7/18/90 G.P

Time	Furance Pressure N	Furance Pressure S	Scrubber Differess	Feeder % 1	2	3	4
9:00 AM	-.6	-.4	10.5	60	60	86	94
9:15 AM	-.5	-.3	11.0	60	60	84	90
9:30 AM	-.5	-.3	11.0	58	59	80	88
9:45 AM	-.4	-.2	11.0	62	62	100	95
10:00 AM	-.6	-.4	11.0	60	62	100	100
10:15 AM	-.5	-.7	11.0	53	55	100	100
10:30 AM	-.2	-.4	11.0	71	72	100	100
10:45 AM	-.3	-.6	11.0	66	65	100	100
11:00 AM	-.3	-.7	12.0	82	78	100	100
11:15 AM	-.2	-.4	11.5	53	54	100	100
11:30 AM	-.4	-.6	12.0	64	62	100	100
11:45 AM	-.6	-.4	11.0	72	68	100	100
12:00 PM	-.5	-.3	11.5	85	78	100	100
TG							

Steam Flowrate Data
X 15,000

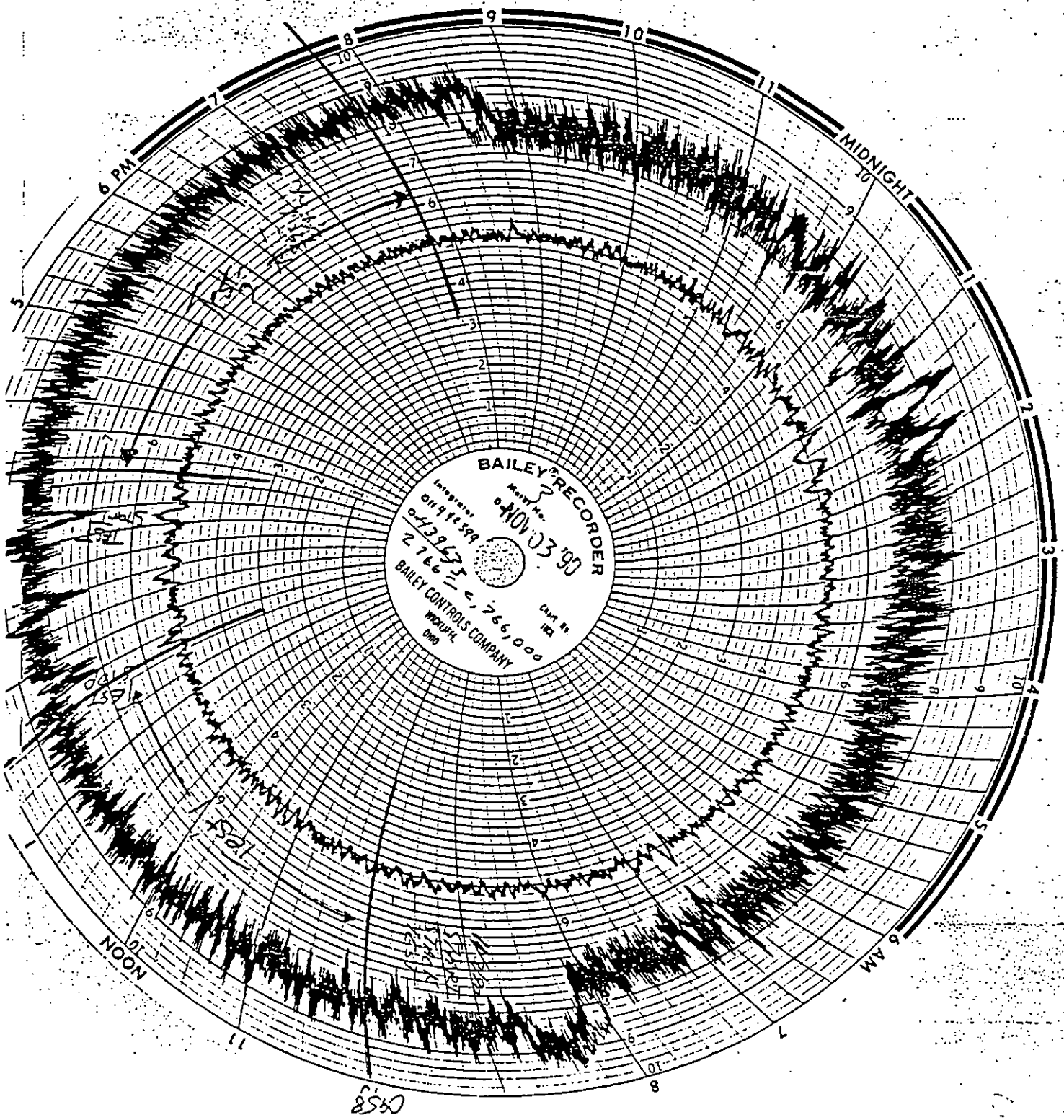

Steam Flowrate Data
X 15,000

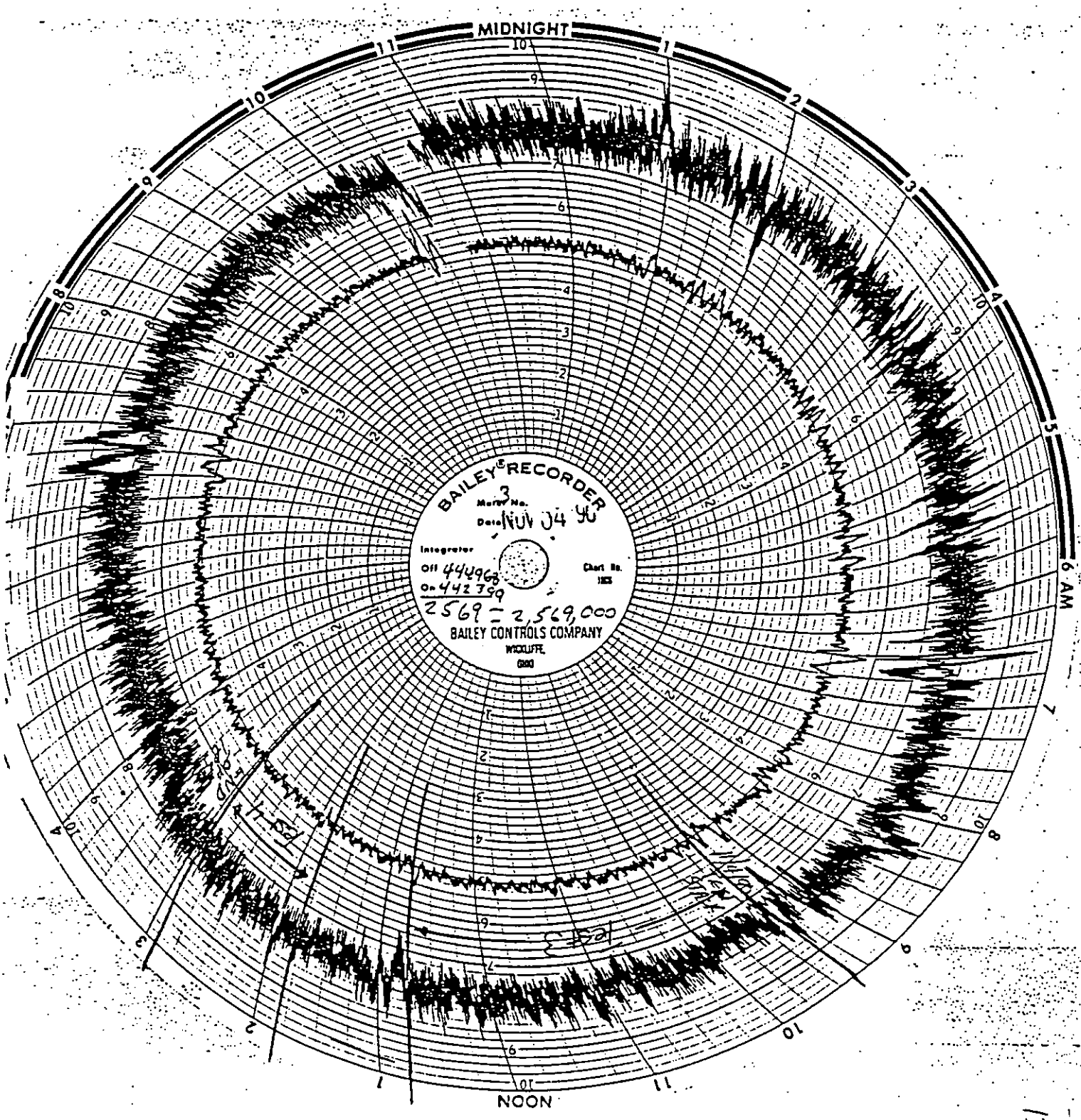

1350

Process Data

Georgia Pacific, Ft. Brass 11-3-90

y 15 minutes	Furnace Draft S	Draft N	Scrubber ΔP	Fuel Feeders 1	2	3	4	- Percents
5	-.6	-.7	13 +	61	53	87	95	
0	-.4	-.7	14 +	65	56	88	96	
5	-.4	-.7	13 +	61	52	82	91	
10	-.3	-.6	13 +	62	53	83	93	
5	-.5	-.9	13 +	61	52	82	91	Test 2
0	-.4	-.6	13+	60	50	78	88	
5	-.6	-.5	13+	55	48	76	86	
0	-5	-3	12.	55	48	75	82	
5	-.4	-.8	14 +	60	51	79	89	
0	-.5	-.9	14+	54	47	76	82	
5	-.3	-.5	14+	66	54	85	94	
0	-.3	-.6	13 +	62	53	83	92	
5	-.3	-.6	13+	57	49	77	86	
0	-.3	-.7	14+	60	50	78	87	
5 P.M.	-4	-.7	13+	54	48	75	84	

Process Data

Georgia Pacific, Fort Bragg

Date: 11-3-90

ry 15 minutes

Time	Furnace Draft S	Furnace Draft N	Scrubber ΔP	Fuel Feed 1	Fuel Feed 2	Fuel Feed 3	Fuel Feed 4 — PERCENTS
15	-.3	-.7	12 IN	55	45	83	92
30	-.3	-.7	13 IN	55	45	83	95
45	-.5	-.9	14 IN	58	50	75	85
00	-.3	-.6	13.5 IN	56	48	80	90
15	-.4	-.7	13 IN	55	49	75	85
30	-.5	-.8	14 IN	52	44	70	80
45	-.4	-.9	14.5 IN	55	47	85	97
00	-.3	-.5	13 IN	55	47	80	90
15	-.3	-.9	13 IN	55	50	75	85
30	-.3	-.8	13 IN	55	45	85	95
45	-.4	-.6	13 IN	55	45	75	85
00	-.3	-.8	13 IN	55	48	72	82
15	-.5	-.8	14 IN	57	47	77	86
30	-.3	-.8	14 IN	53	45	87	97
45	-.3	-.4	13 IN	57	49	75	85
00	-.3	-.6	13 IN	55	47	72	80
15	-.2	-.4	12.5 IN	56	49	75	85
30	-.2	-.4	12.5 IN	56	48	80	90
45		Test	Finished	1:40 PM			
00							
15							
30							
45							

Test 1

11-4-90 TEST SMOKE STACK #III Boiler

	FURNACES P.		SCRUBBERS D.P.	FEEDERS				
	S	N		1	2	3	4	PERCENT
30 AM	-.6	-.9	14.5+	50	42	70	78	
45	-.3	-.5	13	56	47	77	83	
00	-.2	-.5	13	53	43	73	79	
15	-.3	-.6	13	52	43	73	80	
30	-.2	-.5	13	56	48	78	86	
45	-.3	-.7	14	61	53	85	94	
00	-.3	-.6	13	53	44	72	80	Test 3
15	-.2	-.7	14.5	65	58	88	96	
30	-.1	-.5	14	55	48	78	85	
45	-.3	-.6	14	53	45	75	82	
00 pm	-.3	-.8	14.5	55	47	75	82	
15	-.2	-.6	13	57	47	77	86	
30	-.3	-.6	14.5	58	48	78	85	
45	-.1	-.5	15	67	60	87	96	
00	-.2	-.4	13	61	53	84	93	
15	-.3	-.7	14	60	52	80	89	
30	-.3	-.4	12.5	55	47	76	84	
45	-.3	-.4	12.5	52	43	73	80	
00	-.3	-.4	12.5	49	40	68	76	
15	-.2	-.5	13	51	42	70	79	Test 4
30	-.2.5	-.4.5	13	52	44	69	77	
45	-.1.5	-.3	12	49	40	67	76	
00	-.25	-.4	13	50	42	70	78	
	-.15	-.35	13	50	41	69	77	
	-.15	-.35	13	[illegible]	41	72	77	

ATTACHMENT II: Stack Configuration And Traverse Point Locations.

SELECTION OF SAMPLING SITES AND

NUMBER OF TRAVERSE POINTS

PARTICULATE TRAVERSES

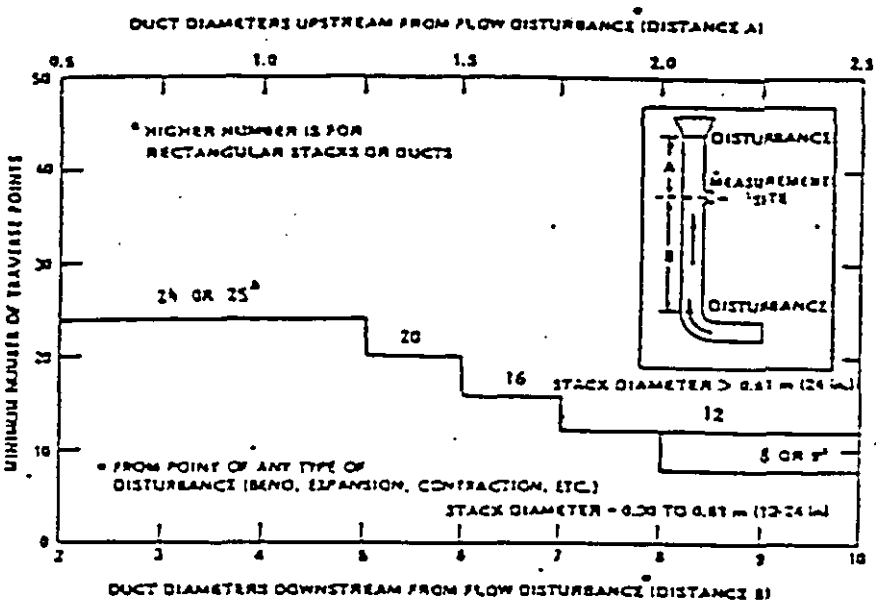

Figure 1-1. Minimum number of traverse points for particulate traverses.

[Method 1 — Figure 1-1 revised by 48 FR 45035, September 30, 1983]

Whenever sufficient straight stack or duct is available, the sampling site is located at least 8 stack diameters downstream and at least 2 stack diameters upstream from any flow disturbance such as a bend or an elbow or a fan. In situations where the above criteria cannot be met, the number of traverse points is increased according to the above graph.

For circular stacks, the traverse points are located on two diameters, the traverse axes dividing the stack cross-section into equal parts.

For rectangular stacks, the cross-section is divided into equal areas, such that the ratio of the length to width of the rectangles formed, is between 1 and 2. The traverse points are located at the center of each area.

Traverse Locations (Circular Stack):

Stack Identification:	Boiler #3 Exhaust
Stack Diameter:	66 inches
Sampling Locations:	≈2.7 diameters upstream of stack discharge ≈7.3 diameters downstream of nearest disturbance
Minimum Number of Traverse Points as Specified by CARB Method 1:	20
Number of Traverse Points Sampled:	20

Traverse Point Number	Distance From Inside Wall (In.)
1	1.7
2	5.4
3	9.6
4	14.9
5	22.6
6	43.4
7	51.1
8	56.4
9	60.6
10	64.3

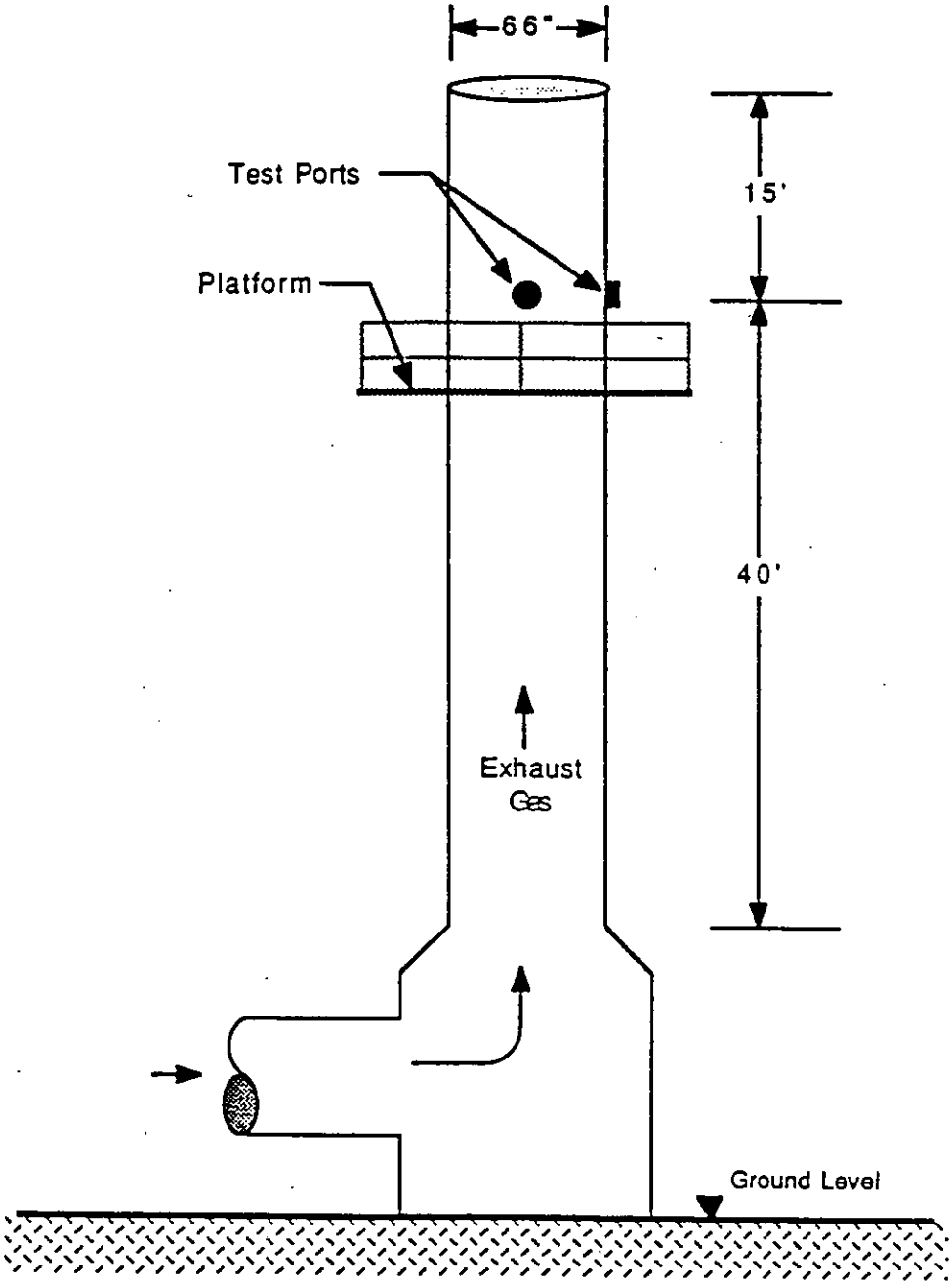

SIDE ELEVATION

Galson Technical Services Inc. 2116 Berkeley Way Berkeley CA.94704	SCALE: NTS	JOB # S9-072.GP	Georgia Pacific	Disk: 72.GP
	DATE: 9/7/90	DRAWN BY: EC	Boiler #3 Scrubber Exhaust Stack	File: Scrub Exh Stack

CYCLONIC FLOW DETERMINATION

Plant: Georgia Pacific Stack: Boiler # 3

Traverse Point No.	Velocity Head ΔP, inches H_2O	Degrees Deviation From Reference α	Traverse Point No.	Velocity Head ΔP, inches H_2O	Degrees Deviation From Reference α
A 1	.60 / 147°F	-10°	B 1	.78 / 148°F	8°
2	.82 / 147°F	3°	2	.90 / 150°F	15°
3	.92 / 149°F	1°	3	1.1 / 150°F	1°
4	.97 / 151°F	3°	4	1.1 / 150°F	3°
5	1.1 / 157°F	6°	5	.82 / 146°	3°
6	.88 / 150°F	4°	6	.85 / 149°	3°
7	.90 / 148°F	1°	7	1.1 / 148°	9°
8	.85 / 149°F	3°	8	.85 / 145°	0°
9	.90 / 149°	3°	9	.90 / 145°	7°
10	[illegible]	4°	10	.90 / 145°	6°

Average | α | = 5°

ATTACHMENT III: Sampling And Analytical Methods

Formaldehyde, Acetaldehyde, And Benzene Emission Data

SAMPLING AND ANALYTICAL METHODS:
FORMALDEHYDE AND ACETALDEHYDE EMISSIONS - CARB METHOD 430

Formaldehyde and acetaldehyde emission testing was conducted in accordance with California Air Resources Board Method 430. The sampling train shown on the following page was utilized to collect the samples. Exhaust gases are drawn through an integral probe/particulate filter (glass wool plug) assembly followed by two impingers containing 15 milliliters (each) of absorbing solution (2,4-dinitrophenylhydrazone, DNPH). Sample flow rate is regulated by a critical orifice/high vacuum pump assembly.

The DNPH solution is formulated within 48 hours of sampling. Sampling is performed at a single point in the exhaust stack/duct at a constant flow rate (i.e., approximately 0.5 liters per minute). The sampling rate is determined prior to each test period with a soap bubble flow meter; sample gas temperatures (at the critical orifice), rotameter readings, and pump vacuum are recorded at approximately 5 to 10 minute intervals during the testing.

At the end of the test interval, the sampling rate is again determined with the bubble meter. The solution is then transferred to a sample bottle, along with a small volume of rinse (approximately 5 milliliters of the DNPH). The samples are packaged (on ice) for shipment to the laboratory.

In the laboratory, the solution is extracted and the derivative is analyzed using high performance liquid chromatography (HPLC), coupled with ultraviolet (UV) absorption detector (at 360 nanometers). Quantification is provided by comparing the sample response with laboratory-prepared standards of formaldehyde. A field blank is prepared and analyzed in conjunction with the samples to determine if sample contamination occurred. The samples are analyzed within seven days of collection.

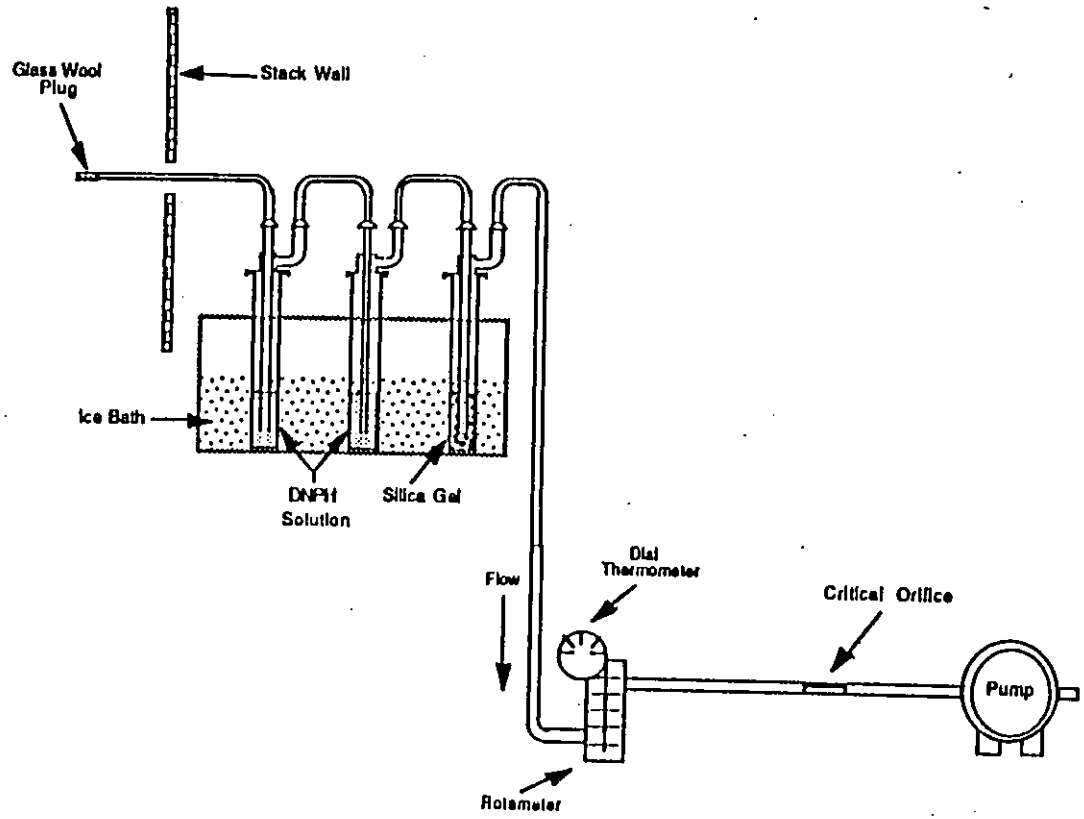

GALSON Technical Services, Inc. 2116 Berkeley Way Berkeley, CA 94704 Tel: (415) 848-0389 Fax: (415) 848-0838	SCALE: NA	JOB NUMBER: S9-072	TIMBER ASSOCIATION OF CALIFORNIA	File: Form. Drwg
	DATE: 6/14/90	DRAWN BY: ML	FORMALDEHYDE SAMPLING TRAIN	Disk: S9-072

SAMPLING AND ANALYTICAL METHODS:
BENZENE EMISSIONS - CARB METHOD 410A

Benzene emission testing was conducted in accordance with California Air Resources Board Method 410A. The sampling train shown on the following page was utilized to collect the samples.

An integrated sample of the exhaust gas is collected in a tedlar bag. Sample gas is drawn through a stainless steel probe/integrated particulate filter (glass wool plug) assembly. The gas then passes through teflon tubing and into a 10-liter tedlar bag. The bag is retained in a rigid, leak-free container (i.e., lung sampler) which is evacuated at a constant rate of approximately 0.2 lpm. The sampling system is leak tested prior to use.

Following sampling, the bag is labelled, sealed, and transferred to a storage container. Exposure to sunlight is minimized. The sample is then transferred to a laboratory where it is analyzed for benzene using gas chromatography/mass spectrometry (GC/MS). Quantification is provided by comparing the sample response with laboratory-prepared standards. A field blank (nitrogen) is prepared and analyzed in conjunction with the samples to determine if sample contamination occurred. Sample analyses are performed within 48 hours of collection.

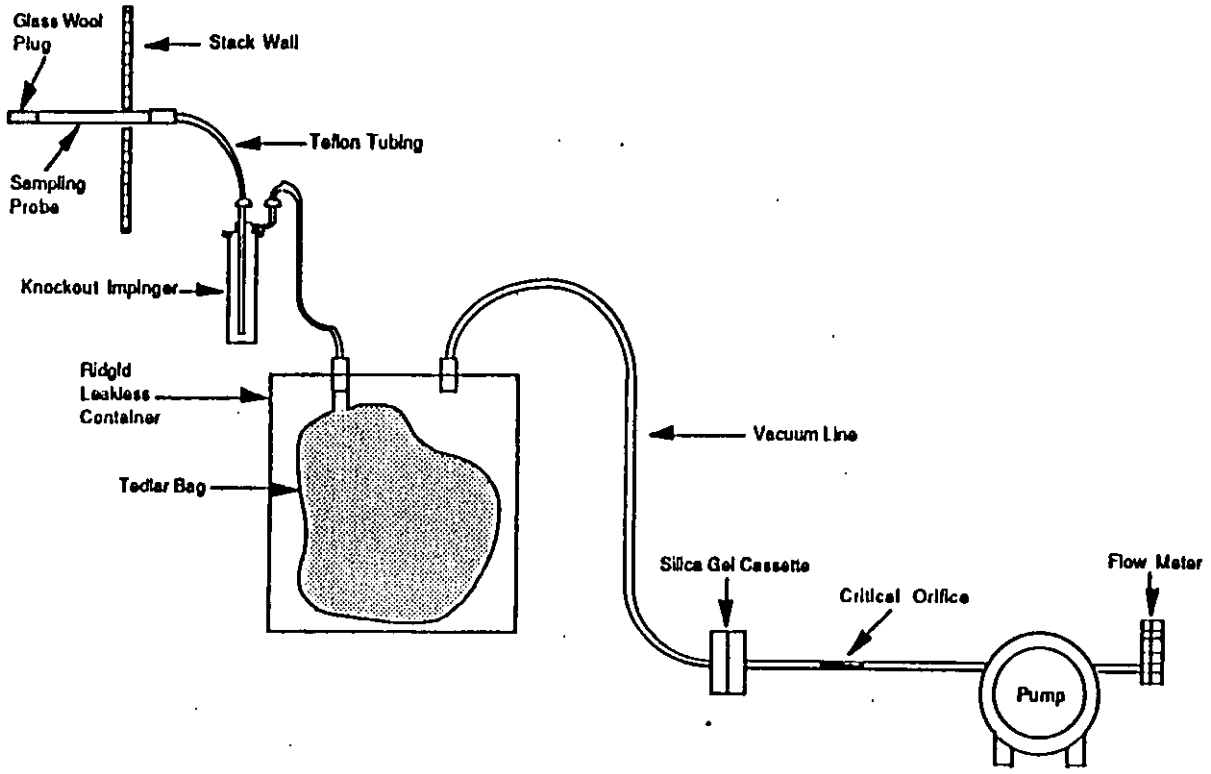

GALSON Technical Services, Inc. 2118 Berkeley Way Berkeley, CA 94704 Tel: (415) 848-0369 Fax: (415) 848-0838	SCALE: NA	JOB NUMBER: S9-072	TIMBER ASSOCIATION OF CALIFORNIA	File: Benz. Drwg
	DATE: 10/10/90	DRAWN BY: ML	BENZENE SAMPLING TRAIN (CARB 410A)	Disk: MASTER METHODS

SAMPLING AND ANALYTICAL METHODS:
DETERMINATION OF PARTICULATE AND METALS (11) EMISSIONS -
CARB METHOD 5 AND EPA MULTIPLE METALS METHOD (DRAFT: 8/28/89)

Particulate and metals emission testing was performed in accordance with the California Air Resources Board (CARB) Method 5 and the EPA Draft Multiple Metals Method (dated August 28, 1989), respectively. Sampling equipment manufactured by Research Appliance Corporation (RAC) and Nutech Corporation was utilized to collect the samples. A schematic of the sampling train is shown on the following page. Velocity pressure of the stack gas is measured with a Stausscheibe-type pitot tube connected to an inclined gauge manometer. Isokinetic sampling rates are calculated using a nomograph and sample flow rate is regulated accordingly by adjusting the pressure drop across a calibrated orifice. Total sample volume is measured with a dry gas meter. Direct thermocouple read-out is provided for stack gas, impinger effluent, probe, sampling box, and gas meter influent and effluent temperatures. Emissions of the following metals were determined:

Arsenic	Beryllium
Cadmium	Chromium (Total)
Copper	Lead
Manganese	Mercury
Nickel	Selenium
Zinc	

Stack gases are drawn through a glass nozzle and a heated, glass-lined sampling probe, prior to passing through a pre-weighed 85 millimeter glass fiber filter (for particulate collection). The filter, which meets CARB specifications for removal efficiency, is maintained at 250°F. The gases are then bubbled through a series of five impingers in an ice bath. The first two impingers each contain 100 milliliters (mls) of a nitric acid/hydrogen peroxide solution[1]; the third impinger is empty; the fourth impinger contains 100 mls of a potassium permanganate/sulfuric acid solution[2]; the fifth impinger contains 200 grams of indicating-type silica gel.

Following the completion of sampling, the filter is recovered and transferred to a storage container (Container C); the probe, nozzle, and filter holder are rinsed (and brushed) with acetone (Container A), and then rinsed (only) with the nitric acid/hydrogen peroxide solution (Container B). The volume of solution in the first, second, and third impingers is measured and transferred to Container D; these impingers (and connecting glassware) are then rinsed with the nitric acid/hydrogen peroxide solution and the rinses are added to Container D. The volume of solution in the fourth impinger is measured and transferred to Container E; this impinger is then rinsed with the potassium permanganate/sulfuric acid solution and transferred to Container E. Lastly, the silica gel in the fifth impinger is transferred to Container F.

---

1 5%HNO_3/10%H_2O_2.

2 4%$KMnO_4$/10%H_2SO_4

SAMPLING AND ANALYTICAL METHODS:
DETERMINATION OF PARTICULATE AND METALS (11) EMISSIONS -
CARB METHOD 5 AND EPA MULTIPLE METALS METHOD (DRAFT: 8/28/89)

In the laboratory, the acetone rinse sample (Container A) is poured into a pre-weighed beaker and evaporated to dryness. The filter (Container C) and beaker are then placed in a dessicator for is then added to the beakers and the samples are digested; following digestion, the Container B and D samples are added and the solution is concentrated to approximately 250 mls. The sample is then analyzed for each metal using the following instrumentation:

Metal	Instrument
Arsenic	Atomic Absorption (Graphite Furnace)
Beryllium	Inductively Coupled Plasma
Cadmium	Inductively Coupled Plasma
Chromium	Inductively Coupled Plasma
Copper	Inductively Coupled Plasma
Lead	Atomic Absorption (Graphite Furnace)
Manganese	Inductively Coupled Plasma
Mercury	Atomic Absorption (Cold Vapor)
Nickel	Inductively Coupled Plasma
Selenium	Atomic Absorption (Graphite Furnace)
Zinc	Inductively Coupled Plasma

The Container E sample (i.e., potassium permanganate/sulfuric acid solution) is first filtered and the filter is washed with permanganate. An aliquot of the filtrate is then analyzed for mercury (only) in accordance with EPA Method 101A (cold vapor atomic absorption), following the addition of potassium permanganate, nitric acid, and sodium chloride hydroxylamine.

The pre-weighed silica gel sample (Container F) is re-weighed and summed with the increase in impinger contents to determine the total volume of water condensed.

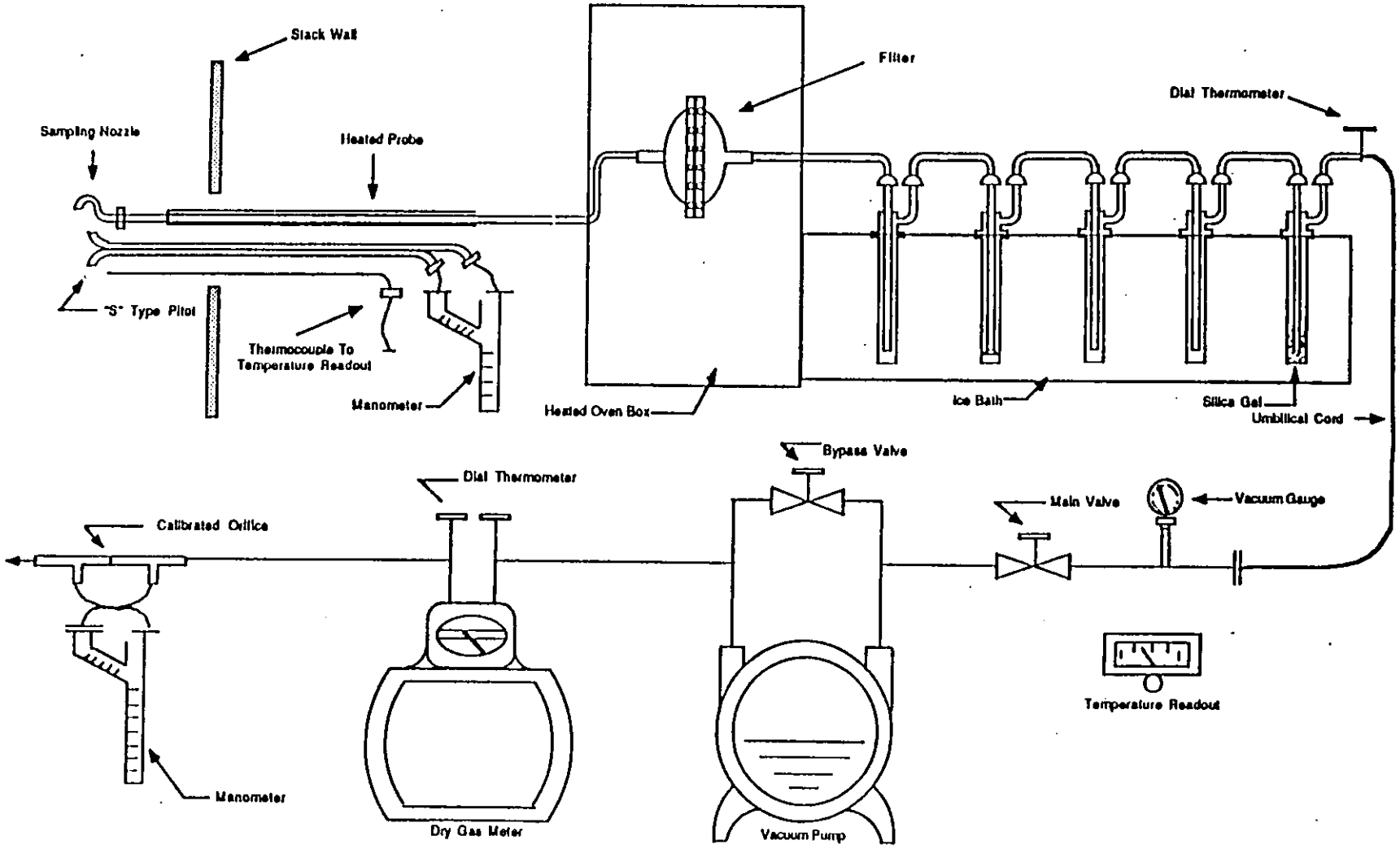

GALSON Technical Services, Inc. 2116 Berkeley Way Berkeley, CA 94704 Tel: (415) 848-0389 Fax: (415) 848-0838	SCALE: NA	JOB NUMBER: S9-072	TIMBER ASSOCIATION OF CALIFORNIA	File: Metals. Drwg
	DATE: 9/27/90	DRAWN BY: ML	MULTIPLE METALS SAMPLING TRAIN	Disk: S9-072

SAMPLING AND ANALYTICAL METHODS:
CONDENSABLE PARTICULATE EMISSIONS (CARB METHOD 5)

Condensable particulate emissions were determined in accordance with California Air Resources Board (CARB) Method 5. Sampling equipment, manufactured by Nutech Corporation, was utilized to collect the samples. A schematic of the sampling train is shown on the following page. Velocity pressure of the stack gas is measured with a stausscheibe-type pitot tube connected to an inclined gauge manometer. Isokinetic sampling rates are calculated using a nomograph and sample flow rate is regulated accordingly by adjusting the pressure drop across a calibrated orifice. Total sample volume is measured with a dry gas meter. Direct thermocouple read-out is provided for stack gas, impinger effluent, probe, sampling box, gas meter influent and effluent temperatures.

Stack gases are drawn through a glass nozzle and a glass-lined sampling probe, followed by a filter on which particulate matter is collected The gases are then bubbled through a series of four impingers in an ice bath to condense moisture. The first two impingers each contain 100 ml of deionized water, the third impinger is empty and the fourth impinger contains 300 grams of indicating silica gel.

Following the completion of sampling, the filter is removed and transferred to a storage container (Container #A). The probe liner, sampling nozzle, and filter holder are rinsed with acetone, and the rinses are transferred to a separate storage container (Container #B). The volume of the water in the impingers is measured; the impinger contents and rinse solution (deionized water) are then transferred to Container #C. The impingers and connecting glassware are then rinsed with methylene chloride and the rinses are transferred to Container #C. Lastly, the silica gel in the fourth impinger is transferred to Container #D.

In the laboratory, the back-half, or condensable, particulate matter is reported as the sum of the organic and water-soluble fractions of the Container C sample; the sample is transferred to a separatory funnel and extracted with methylene chloride (liquid-liquid extraction). The methylene chloride and water fractions are then evaporated to dryness in pre-weighed dishes and the organic and water-soluble back-half particulate quantities are determined gravimetrically in accordance with section 4.3.1 of Method 5.

The pre-weighed silica gel sample (Container #D) is re-weighed and summed with the increase in impinger contents to determine the total volume of water condensed.

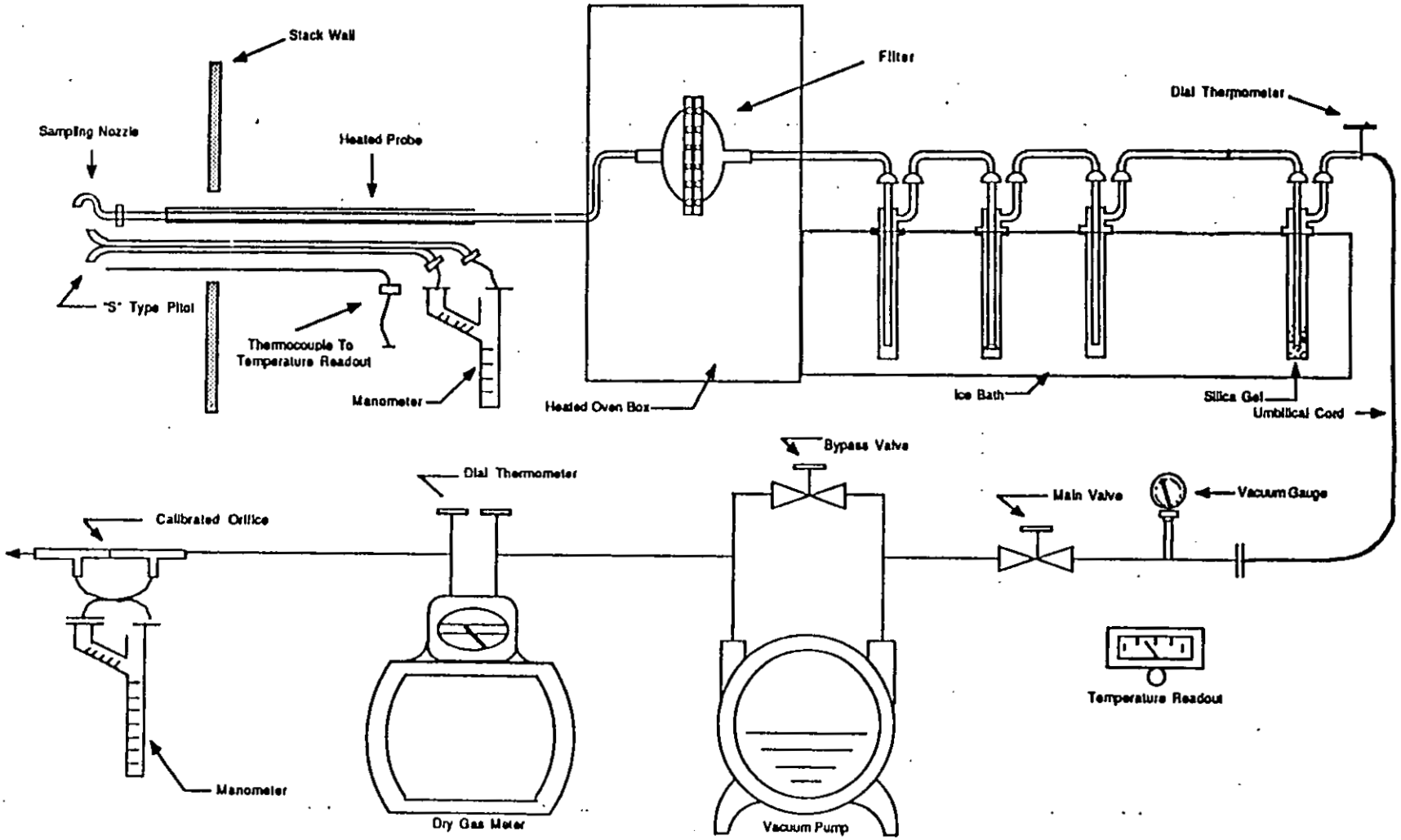

GALSON Technical Services, Inc. 2116 Berkeley Way Berkeley, CA 94704 Tel: (415) 848-0389 Fax: (415) 848-0838	SCALE: NA	JOB NUMBER: S9-072	TIMBER ASSOCIATION OF CALIFORNIA	File: Part. Drwg
	DATE: 9/27/90	DRAWN BY: ML	CONDENSABLE PARTICULATE SAMPLING TRAIN	Disk: S9-072

SAMPLING AND ANALYTICAL METHODS:
HEXAVALENT CHROMIUM EMISSIONS - CARB METHOD 425

Hexavalent chromium emission testing was performed in accordance with California Air Resources Board (CARB) Method 425 (amended, January 11, 1990). A schematic of the sampling train is presented on the following page. Velocity pressure of the stack gas is measured with a stausscheibe type pitot tube connected to an inclined gauge manometer. Isokinetic sampling rates are calculated using a nomograph and sample flow rate is regulated accordingly by adjusting the pressure drop across a calibrated orifice. Total sample volume is measured by a dry gas meter. Direct thermocouple read-out is provided for stack gas, impinger effluent, probe, sampling box, and the gas meter influent and effluent temperatures.

Stack gases are drawn through a glass nozzle, probe and oven assembly (non-heated) and bubbled through two impingers in series, each containing 100 milliliters of 0.1 N sodium hydroxide (NaOH) solution. Stack gases are then drawn through an empty impinger (for droplet/mist knockout) followed by an 85mm teflon-impregnated fiberglass filter (Pallflex Products #T60A20) meeting CARB specifications for removal efficiency. The sample gas then passes through a fourth impinger containing 300 grams of indicating silica gel, prior to entering the metering system.

Following the completion of sampling, the volume of the solution in the impingers is measured; the impinger contents and the rinse solution (0.1 N NaOH) are transferred to a storage container (Container #1). The filter is also removed and transferred to Container #1. The probe liner, sampling nozzle, filter holder, and connecting glassware are rinsed with 0.1 N NaOH, and the rinse is added to Container #1. The entire sampling train is then rinsed with 0.1 N nitric acid and the rinse is transferred to Container #2. Lastly, the silica gel in the fourth impinger is transferred to Container #3.

In the laboratory, the total volume of the Container #1 sample is measured. An aliquot of the sample is transferred to a beaker and acidified to a pH of approximately 1 (with 6 N sulfuric acid). After the addition of diphenylcarbazide (allowing approximately 10 minutes for color development), the sample is filtered and the absorbance is measured with a spectrophototmeter at a wavelength of 540 nm. The absorbance of the sample is compared with solutions of known amounts to determine sample quantities. Field and laboratory (internal) blank samples are prepared and analyzed in conjunction with the samples to account for potential contamination and/or background levels. A second aliquot of the Container #1 solution is analyzed for total chromium using flame atomic absorption spectroscopy (AAS). The Container #2 solution is similarly analyzed for total chromium using AAS. The pre-weighed silica gel sample (Container #3) is re-weighed and summed with the increase in impinger contents to determine the total volume of water condensed.

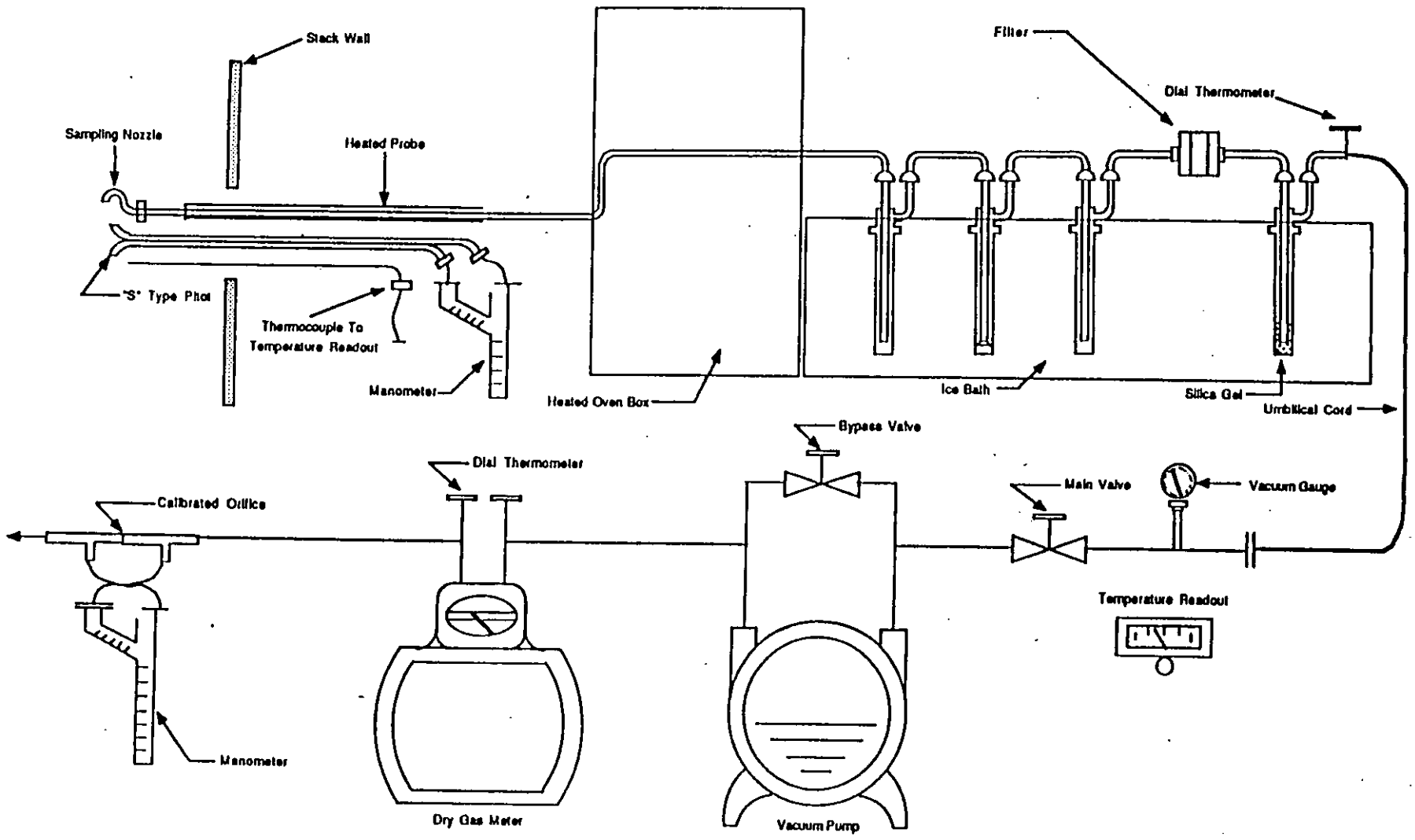

GALSON Technical Services, Inc. 2116 Berkeley Way Berkeley, CA 94704 Tel: (415) 848-0389 Fax: (415) 848-0838	SCALE: NA	JOB NUMBER: S9-072	TIMBER ASSOCIATION OF CALIFORNIA	File: Hex Chr. Drwg
	DATE: 9/7/90	DRAWN BY: ML	HEXAVALENT CHROMIUM SAMPLING TRAIN (CARB METHOD 425)	Disk: S9-072

METHOD FOR THE DETERMINATION OF
POLYCYCLIC AROMATIC HYDROCARBON EMISSIONS
(CARB METHOD 429)

Sampling and analysis for emissions of Polycyclic Aromatic Hydrocarbon (PAH) compounds was performed in accordance with the California Air Resources Board (CARB) Method 429. Stack gas samples were collected utilizing Modified Method 5 (MM5) procedures; a schematic of the train is shown on the following page. Velocity pressure of the stack gas is measured with an S-type pitot connected to an inclined gauge manometer. Isokinetic sampling rates are calculated using a nomograph, with sample flowrate regulated by adjusting the pressure drop across a calibrated orifice. Total sample volume is measured by a dry gas meter. Dial thermometers and/or thermocouples are employed to monitor stack gas, probe filter oven, XAD-2 trap effluent, impinger effluent, and dry gas meter influent and effluent temperatures.

Stack gases are drawn isokinetically through a nozzle and heated borosilicate glass probe, and then through an 85 millimeter diameter glass fiber filter meeting CARB Method 5 specifications for particulate removal efficiency. Both probe and filter are maintained at 250 ± 25°F to avoid condensation. The sample gas is then drawn through teflon tubing and an ice water-cooled condenser/solid sorbent trap containing approximately 40 grams of XAD-2 resin. The resin trap is wrapped with aluminum foil (to avoid direct exposure to light) and the temperature of the sample gas is maintained below 68°F at the trap exit. Condensate percolates through the resin and is collected in a knock-out impinger; gases are then bubbled through a series of three impingers for additional moisture removal. The second and third impingers each contain 100 ml of deionized water and the fourth impinger contains approximately 300 grams of indicating silica gel; all impingers are pre-weighed on-site and placed in an ice bath to achieve a sample effluent temperature of less than 68°F.

Following the completion of sampling, the probe liner, nozzle, and all glassware preceding the filter are brushed and sequentially rinsed with methanol, benzene, and methylene chloride; the rinses are transferred to a storage bottle (Container A). The filter is removed and transferred to a separate storage bottle (Container B). The teflon tubing, condenser, and glassware between the filter and resin trap are then rinsed with methanol, benzene, and methylene chloride; the rinses are transferred to a storage bottle (Container C). The XAD-2 resin trap is next removed and sealed (Container D). The impingers are then re-weighed to determine the quantity of moisture condensed; the contents of the knock-out impinger are transferred to a storage container (Container E) along with the methanol, benzene, and methylene chloride rinse of the impinger. The contents of the second and third impinger are transferred to a storage bottle (Container F) along with a deionized water rinse of these impingers and all connecting glassware. Lastly, the silica gel in the final impinger is transferred to a storage bottle (Container G), completing the sample recovery process.

METHOD FOR THE DETERMINATION OF
POLYCYCLIC AROMATIC HYDROCARBON EMISSIONS
(CARB METHOD 429)

Special precautions are taken to avoid sample contamination. All sampling train components upstream of the silical gel impinger are pre-cleaned in accordance with EPA's Manual of Analytical Methods for the Analysis of Pesticide Residues in Human and Environmental Samples, with special attention paid to removing silicon grease from the glassware joints. All glassware was then rinsed with methylene chloride prior to use. No grease is utilized in the sampling train and all gaskets coming in contact with the sample are teflon. Also, sample recovery is performed in a clean area away from the emission source (and other potential sources of contamination) being tested; all (pre-cleaned) sample storage containers have teflon-lined caps. Sampling reagents (filters and XAD-2 resin) are pre-cleaned via soxhlet extraction and spiked with surrogate standard compounds. Lastly, a blank train is assembled and recovered in the field; the blank train is analyzed in conjunction with the samples to document whether contamination occurred.

Sample containers A through F are analyzed for PAH compounds utilizing high resolution gas chromatography/mass spectrometry (HRGC/MS). The following compounds are quantified.

Naphthalene	Acenaphthylene
Acenapthene	Fluorene
Phenanthrene	Anthracene
Fluoranthene	Benzo(a)anthracene
Chrysene	Benzo(b)fluoranthene
Benzo(k)fluoranthene	Benzo(a)pyrene
Pyrene	Indeno(1,2,3-cd)pyrene
Dibenz(a,h)anthracene	Benzo(g,h,i)perylene

The silica gel sample (Container G) was re-weighed and summed with the increase in impinger contents to determine the total volume of water condensed.

In the laboratory, the samples and/or extracts corresponding to Containers A through F are combined and prepared for analysis in accordance with CARB Method 429 procedures. All samples (including the blanks) are fortified with internal and surrogate standards prior to preparation. Following sample clean-up steps, the final residue is dissolved in 20 µl of toluene, containing carbon-labeled internal standards used for determining recovery efficiencies. The instrument and conditions utilized to perform the analyses are summarized on the following page.

Prior to sample analysis, the mass spectrometer response was calibrated with several standard solutions containing known amounts of the PAH isomers of interest. In addition, a continuing calibration was demonstrated every 12 hours using one of the solutions. Response factors used for the calculation of the analyte concentrations were obtained from the continuing calibration checks.

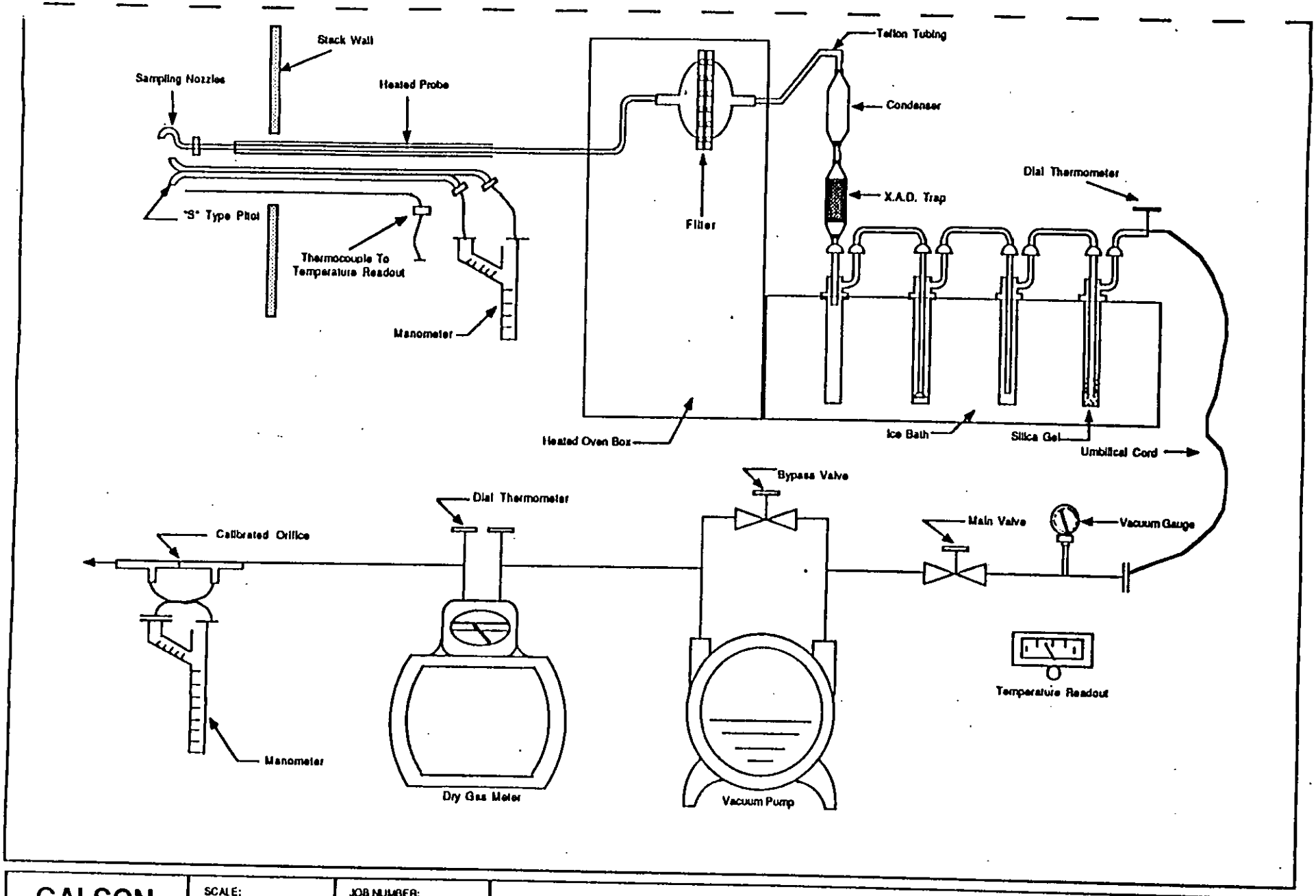

GALSON Technical Services, Inc. 2116 Berkeley Way Berkeley, CA 94704 Tel: (415) 848-0389 Fax: (415) 848-0838	SCALE: NA	JOB NUMBER: S9-072	TIMBER ASSOCIATION OF CALIFORNIA	File: PAH. CARB 429
	DATE: 10/10/90	DRAWN BY: MSL	PAH SAMPLING TRAIN (CARB METHOD 429)	Disk: S9-072

SAMPLING AND ANALYTICAL METHODS: CRYSTALLINE SILICA EMISSIONS

Crystalline silica emission testing was performed adhering to California Air Resources Board (CARB) Method 5 sampling procedures. A schematic of the sampling train is presented on the following page. Velocity pressure of the stack gas is measured with a stausscheibe type pitot tube connected to an inclined gauge manometer. Isokinetic sampling rates are calculated using a nomograph and sample flow rate is regulated accordingly by adjusting the pressure drop across a calibrated orifice. Total sample volume is measured by a dry gas meter. Direct thermocouple read-out is provided for stack gas, impinger effluent, probe, sampling box, and the gas meter influent and effluent temperatures.

Stack gases are drawn through a stainless steel nozzle, glass probe and 47mm polyvinyl chloride (PVC) filter (Gelman Products #GLA 5000). Stack gases are then bubbled through two impingers in series, each containing 100 milliliters of de-ionized water followed by an empty impinger (for droplet/mist knockout). The sample gas then passes through a fourth impinger containing 300 grams of indicating silica gel, prior to entering the metering system.

Following the completion of sampling, the probe liner, sampling nozzle and filter holder are rinsed with acetone and transferred to Container #A. The filter is removed and transferred to Container #B. The volume of the solution in the impingers is measured and transferred to a Container #C. Lastly, the silica gel in the fourth impinger is transferred to Container #D.

In the laboratory, the sample is analyzed adhering to the general protocol of NIOSH 7500 method. A bulk ash sample is submitted to the laboratory for analysis, also. A field blank is analyzed in conjunction with the samples to account for potential contamination and/or background levels. The contents of Container #B (filters) are low-temperature ashed and the solid is re-deposited on pre-weighed silver membrane filters. Similarly, the Container #A (acetone) solutions are also filtered onto silver membranes. Analysis is performed on a Philips 3100 X-Ray Diffraction unit, equipped with graphite monochromatized copper radiation. Finally, the pre-weighed silica gel sample (Container #D) is re-weighed and summed with the increase in impinger contents to determine the total volume of water condensed.

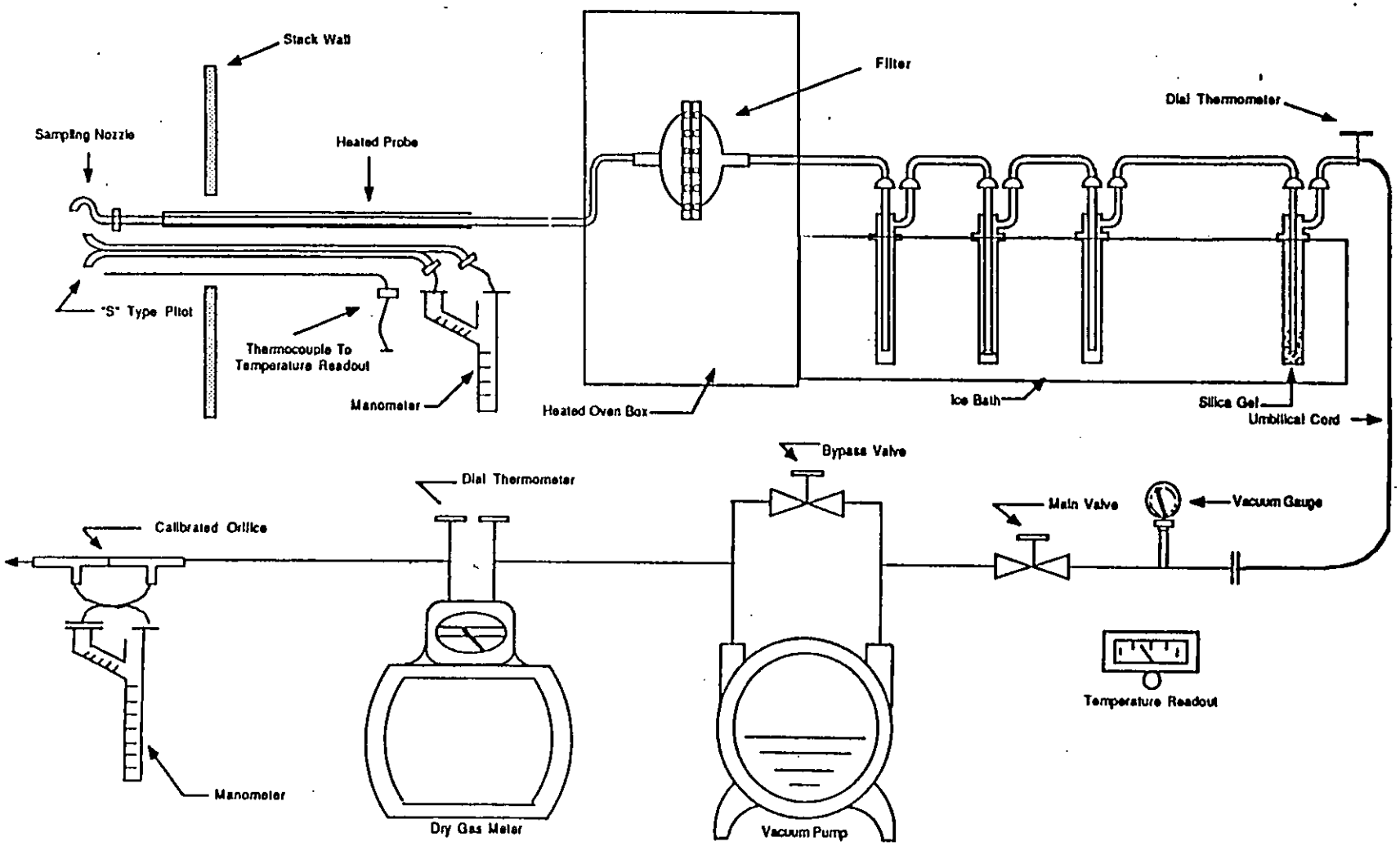

GALSON Technical Services, Inc. 2116 Berkeley Way Berkeley, CA 94704 Tel: (415) 848-0389 Fax: (415) 848-0838	SCALE: NA	JOB NUMBER: S9-072	TIMBER ASSOCIATION OF CALIFORNIA	File: C.S.DRWG
	DATE: 9/27/90	DRAWN BY: ML	CRYSTALLINE SILICA SAMPLING TRAIN	Disk: S9-072

SAMPLING AND ANALYTICAL METHODS:
OXYGEN AND CARBON DIOXIDE - CARB METHOD 100
(CONTINUOUS MONITORING PROCEDURE)

Stack gas concentrations of oxygen and carbon dioxide were determined in accordance with the California Air Resources Board (CARB) Method 100. An electrochemical oxygen analyzer manufactured by Infrared Industries, Inc. (Model IR-2200) and a nondispersive infrared radiation (NDIR) carbon dioxide analyzer manufactured by Horiba Instruments (Model PIR-2000) were utilized to perform the testing. The stack gas conditioning system consisted of a glass wool filter and a hygroscopic ion exchange membrane (PermaPure Products, Inc.) for particulate and moisture removal. Data were digitally recorded using a data logger/personal computer assembly; a strip chart recorder was also used for back-up purposes. A schematic of the sampling train is shown on the following page.

Stack gases are drawn through the probe/three-way calibration valve assembly and through a heated sampling line to the particulate/moisture removal system. The sample gas then passes through a leak-free diaphram pump and flow control valve and into the sample gas manifold. Sample gas flowrate through the system is maintained at approximately 4-5 l/min (to minimize response time); sampling rate of the analyzer is approximately 0.5 l/min. All materials in contact with the sample gas stream are either teflon or stainless steel.

The oxygen analyzer is equipped with a diffusion limited metal-air electrochemical cell; the current generated by the cell is proportional to the sample gas oxygen concentration. The CO_2 analyzer utilizes the NDIR absorption characteristics of carbon dioxide to determine stack gas concentrations; the voltage generated by the detector is proportional to the sample gas concentration. Instrument outputs include a digital (or analog) readout and 0-1V recorder terminals; the 0-25% (O_2) and 0-15% (CO_2) full scale responses for each analyzer are typically utilized The data logger and strip chart recorder are connected to the appropriate instrument terminals to record the analyzer output signals; subsequent data reduction includes converting voltage outputs to CO_2/O_2 concentrations (based on the instrument calibrations and ranges selected) and averaging concentrations for the time periods of interest.

Instrument calibrations are performed on-site utilizing purified nitrogen, zero air (20.9% O_2), oxygen (in nitrogen), and CO_2 (in air) certified gas standards. Prior to the start of testing, the instruments are calibrated directly by introducing each calibration gas to the sample gas manifold; a system bias check is then performed by introducing each gas at the probe/three-way valve assembly. The calibration checks are repeated at the conclusion of the testing; acceptable performance specifications include a zero/calibration drift of up to ± 3%. The instruments are periodically checked for interference from SO_2, NO_X, and CO with a maximum response of 2% of full scale considered acceptable. Other gases are checked on a case by case basis if they are expected to be present and/or potential interferences.

SAMPLING AND ANALYTICAL METHODS:
CARBON MONOXIDE - CARB METHOD 100 -
(CONTINUOUS MONITORING PROCEDURE)

Stack gas concentrations of carbon monoxide were determined in accordance with the California Air Resources Board (CARB) Method 100. A gas correlation non-dispersive infrared analyzer manufactured by Thermo Electron Corporation (TECO Model 48) was utilized to perform the testing. The stack gas conditioning system consisted of a glass wool filter and a hygroscopic ion exchange membrane (PermaPure Products, Inc.) for particulate and moisture removal. Data were digitally recorded using a data logger/personal computer assembly; a strip chart recorder was also used for back-up purposes. A schematic of the sampling train is shown on the following page.

Stack gases are drawn through the probe/three-way calibration valve assembly and through a heated sampling line to the particulate/moisture removal system. The sample gas then passes through a leak-free diaphram pump and flow control valve and into the sample gas manifold. Sample gas flowrate through the system is maintained at approximately 4-5 l/min (to minimize response time); sampling rate of the analyzer is approximately 1 l/min. All materials in contact with the sample gas stream are either teflon or stainless steel.

The TECO analyzer determines CO concentrations by measuring the absorbance of the sample in the infrared region. Gas filter correlation is employed to improve the specificity and sensitivity of the method. Instrument outputs include a digital readout and 0-1V recorder terminals; full scale responses are selectable in ten ranges corresponding to CO concentrations spanning from 0-1 ppm to 0-10,000 ppm. The data logger and strip chart recorder are connected to the appropriate instrument terminals to record the analyzer output signal; subsequent data reduction includes converting voltage outputs to CO concentrations (based on the instrument calibration and range selected) and averaging concentrations for the time period of interest.

The instrument is periodically checked for interference from SO_2, NO_X, and CO_2, with a maximum response of 2% of full scale considered acceptable. Other gases are checked on a case-by-case basis if they are expected to be present and/or potential interferences.

Instrument calibration is performed on-site utilizing zero air and a CO in nitrogen certified gas standard. Prior to the start of testing, the instrument is calibrated directly by introducing each calibration gas to the sample gas manifold; a system bias check is then performed by introducing each gas at the probe/three-way valve assembly. The calibration check is repeated at the conclusion of the testing; acceptable performance specifications include a zero/calibration drift of up to ± 3%.

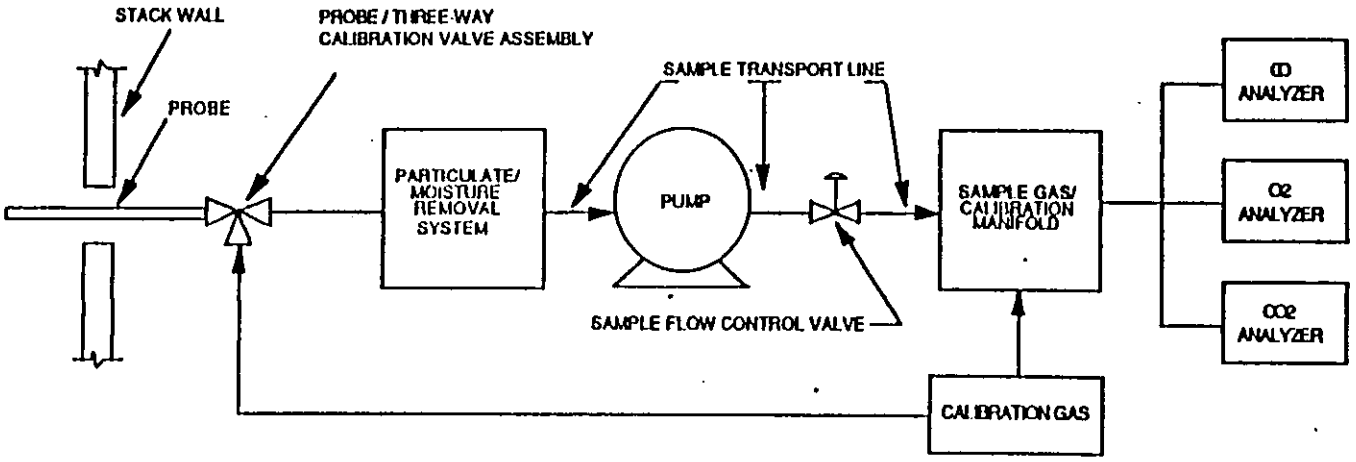

GALSON Technical Services, Inc. 2118 Berkeley Way Berkeley, CA 94704 Tel: (415) 848-0389 Fax: (415) 848-0838	SCALE: NA	JOB NUMBER: S9-072	TIMBER ASSOCIATION OF CALIFORNIA	File: CEM-D Drwg
	DATE: 10/8/90	DRAWN BY: MSL	CO, O2, AND CO2 SAMPLING TRAIN	Disk: S9-072

SAMPLING AND ANALYTICAL METHODS:
TOTAL HYDROCARBON EMISSIONS - CARB METHOD 100
(CONTINUOUS MONITORING PROCEDURE)

Stack gas concentrations of total gaseous hydrocarbons (THC) were determined in accordance with the California Air Resources Board (CARB) Method 100. A Ratfisch Instruments, Ltd. (Model RS 55) THC analyzer was utilized to perform the testing. Data were digitally recorded using a data logger/personal computer system; a strip chart recorder was also used for back-up purposes. A schematic of the sampling train is shown on the following page.

Stack gases are drawn through the probe and heated sampling line to the analyzer. The instrument is equipped with an integral heated filter/leak-free diaphram pump and a flame ionization detector (FID). The sampling rate of the analyzer is approximately 4 l/min. The FID is fueled with high purity hydrogen; hydrocarbon-free combustion air is also supplied to the analyzer. All materials in contact with the sample gas stream are either teflon or stainless steel.

Instrument outputs include an analog readout and 0-1V recorder terminals. The data logger and strip chart recorder are connected to the appropriate instrument terminals to record the analyzer output signals; subsequent data reduction includes converting voltage outputs to concentrations (based on the instrument calibrations and ranges selected) and averaging concentrations for the time periods of interest. Total hydrocarbons are measured on a wet basis, as methane; concentrations are corrected to dry conditions using the moisture content of the stack gas.

Instrument calibration is performed on-site utilizing zero air and methane (in air) certified gas standards. Prior to the start of testing, the instrument is calibrated directly by introducing each calibration gas directly to the instrument; a system bias check is then performed by introducing each gas at the probe/three-way valve assembly. The calibration check is repeated at the conclusion of the testing; acceptable performance specifications include a zero/calibration drift of up to ± 3%.

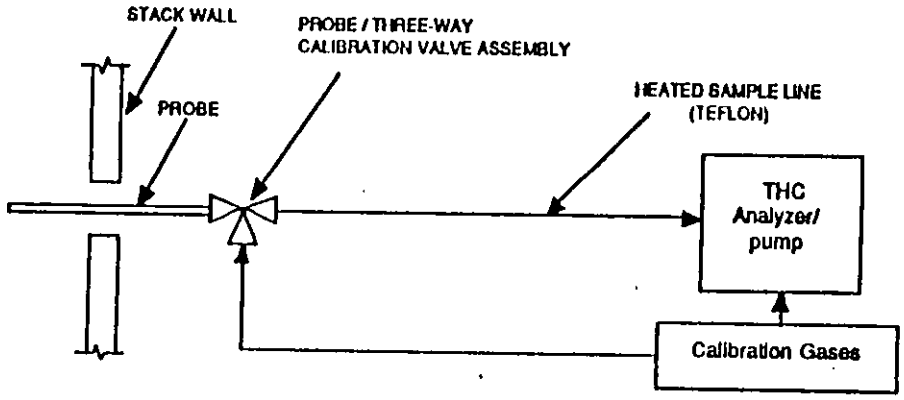

GALSON Technical Services, Inc. 2116 Berkeley Way Berkeley, CA 94704 Tel: (415) 848-0389 Fax: (415) 848-0838	SCALE: NA	JOB NUMBER: S9-072	TIMBER ASSOCIATION OF CALIFORNIA	File: THC. Drwg
	DATE: 10/10/90	DRAWN BY: ML	THC SAMPLING SYSTEM	Disk: S9-072

VOLUMETRIC FLOW RATE DETERMINATION - CARB METHODS 1 AND 2

Velocity traverses are performed at the sampling location in accordance with California Air Resources Board (CARB) Methods 1 (Traverse Point Determination) and 2 (Volumetric Flow Rate Determination). The velocity pressure of the stack gas is measured at each traverse point in the stack/duct with a stausscheibe or standard-type pitot tube connected to an inclined gauge manometer. Stack gas temperature is monitored with either a mercury-in-glass or a calibrated Type K thermocouple. Exhaust gas moisture content is determined using wet-bulb/dry-bulb temperature measurements.

ATTACHMENT IV: Calibration Data

PRE-TEST CALIBRATION DATA

NUTECH

Meter Box 002

C A L I B R A T I O N S H E E T

Customer : GALSON TECHNICAL Serial : 80302
Date : 06-02-90

CALCULATION DATA FOR RUN :	1	2	3
1. Barometric Pressure, P(B):	30.30	30.30	30.30
2. Orifice Setting, Delta H :	2.00	0.75	6.00
3. Finial Reading (Test) :	315.401	326.098	337.861
4. Initial Reading (Test) :	304.904	315.955	327.562
5. Volume, V(T) Cubic Feet :	10.497	10.143	10.299
6. Temp Initial T(T(I)) F :	73	74	74
7. Temp Finial T(T(F)) F :	74	74	74
8. Finial Reading (Box) :	17.424	28.153	39.820
9. Initial Reading (Box) :	7.006	18.002	29.610
10. Volume, V(B) Cubic Feet :	10.418	10.151	10.210
11. Temp Initial T(B(I)) F :	75	78	81
12. Temp Final T(B(F)) F :	78	80	84
13. Elapsed Time, Minutes :	14.0	22.0	8.0
Delta H(a) :	1.9746	1.9529	1.9909
Gamma :	1.0084	1.0067	1.0101

Calibration Performed By : William A. Ballard

Galson
Technical Services, Inc.
2118 Berkeley Way
Berkeley, CA 94704
Tel: (415) 848-0389
Fax: (415) 848-0838

Calibration Data — Stack Sampling Train
Orifice and Dry Test Meters

Date 10/31/90 Wet Test Meter ID [illegible]
Meter Box ID 001 Barometric Pressure 30.09

ORIFICE READING (ΔH_D) in. H_2O	WET TEST METER GAS VOLUME (V_W) ft^3	WET TEST METER TEMP. (T_W) °F	DRY GAS METER GAS VOLUME (V_D) ft^3	TEMPERATURE DATA °F Time	$T_{D\,in}$	$T_{D\,out}$	$T_{D\,avg}$	TIME Δt min.	γ	ΔH_a
.5	3.0	531	[illegible] 559.770 / 2.99		80 / 81 / 82	78 / 78 / 78	539	7.70	.991	1.81
1.0	4.0	531	567.001 / [illegible] / 4.05		79 / 80 / 80	79 / 79 / 79	539	7.30	.975	1.84
2.0	6.0	531	573.029 / 567.111 / 5.92		81 / 82 / 82	79 / 80 / 80	540	8.00	1.03	1.96
4.0	10.0	531	581.268 / 573.364 / 7.90		82 / 84 / 87	80 / 82 / 85	543	7.55	1.03	1.95
								Average	1.01	1.89

$$\gamma = \frac{V_W}{V_D}\left(\frac{T_{D\,avg}+460}{T_W+460}\right)\frac{P_b}{\left(P_b+\frac{\Delta H_D}{13.6}\right)}$$

Technician: B.S

$$\Delta H_a = 0.0317\,\Delta H_D\left(\frac{1}{V_W}\right)^2\frac{(T_W+460)^2}{P_b(T_D+460)}$$

* adjusted the γ on Box 001's meter - internal adjustment which changed the γ for [illegible]

Galson
Technical Services, Inc.
2116 Berkeley Way
Berkeley, CA 94704
Tel: (415) 848-0389
Fax: (415) 848-0838

Orifice and Dry Test Meters

Date 11/1/90 Wet Test Meter ID GTS#2

Meter Box ID 002 Barometric Pressure 30.14

ORIFICE READING (ΔH_D) in. H_2O	WET TEST METER GAS VOLUME (V_W) ft³	WET TEST METER TEMP. (T_W) °F	DRY GAS METER GAS VOLUME (V_D) ft³	TEMPERATURE DATA °F Time	$T_{D\,in}$	$T_{D\,out}$	$T_{D\,avg}$	TIME Δt min.	γ	ΔH_a
.5	3.0	528	301.352 298.309 3.043		78 80 80	77 77 77	538	7.6	1.003	1.749
1.0	4.0	528	305.546 301.522 4.024		80 80 80	77 77 77	539	7.36	1.012	1.842
2.0	6.0	528	312.116 306.049 6.067		80 81 81 82	77 77 78 78	539.	8.08	1.005	1.973
4.0	8.0	528	320.544 312.519 8.025		83 85 85	78 79 79	541	7.63	1.012	1.972
								Average	1.008	1.884

$$\gamma = \frac{V_W}{V_D}\left(\frac{T_{D\,avg}+460}{T_W+460}\right)\frac{P_b}{\left(P_b+\frac{\Delta H_D}{13.6}\right)}$$

Technician: D.S.

$$\Delta H_a = 0.0317\,\Delta H_D\left(\frac{1}{V_W}\right)^2\frac{(T_W+460)^2}{P_b(T_D+460)}$$

Thermocouple Calibration Data

Type: T7 (Stack Thermocouple)

ICE WATER BATH N/A	
	Temp. °R
Standard	—
% Deviation	
Standard	—
% Deviation	
Standard	—
% Deviation	

AMBIENT	
	Temp. °R
Standard	530
T7	530
% Deviation	0%
Standard	
% Deviation	
Standard	
% Deviation	

HOT WATER BATH	
	Temp. °R
Standard	669
T7	668
% Deivation	0.1%
Standard	
% Deviation	
Standard	
% Deviation	

Date: 5-8-90

Technician: Ulrich Langlos

Thermocouple Calibration Data

Type: T3 (Stack Thermocouple)

ICE WATER BATH N/A	
	Temp. °R
Standard	—
% Deviation	
Standard	—
% Deviation	
Standard	—
% Deviation	

AMBIENT	
	Temp. °R
Standard	530
T3	530
% Deviation	0%
Standard	
% Deviation	
Standard	
% Deviation	

HOT WATER BATH	
	Temp. °R
Standard	672
T3	670
% Deivation	0.3%
Standard	
% Deviation	
Standard	
% Deviation	

Date: 5-8-90

Technician: Blair Langford

Thermocouple Calibration Data

Type: Probe 1 - 6' - Stack thermocouple
" 2 - 6' - Stack thermocouple

ICE WATER BATH	
	Temp. °R
Standard	
% Deviation	
Standard	
% Deviation	
Standard	
% Deviation	

AMBIENT	
	Temp. °R
Standard	523 °R
ST-1	523 °R
% Deviation	0%
Standard	523 °R
ST-2	523 °R
% Deviation	0%
Standard	
% Deviation	

HOT WATER BATH	
	Temp. °R
Standard	662 °R
ST-1	663 °R
% Deivation	0.15%
Standard	662 °R
ST-2	662 °R
% Deviation	0%
Standard	
% Deviation	

Date: 10/19/90

Technician: D.S.

Thermocouple Calibration Data

Type: Meter 001

ICE WATER BATH	Temp. °R
Standard	492
M-1-I	492
% Deviation	0.00
Standard	492
M-1-O	492
% Deviation	0.00
Standard	
% Deviation	

AMBIENT	Temp. °R
Standard	528
M-1-I	526
% Deviation	0.38
Standard	528
M-1-O	524
% Deviation	0.76
Standard	
% Deviation	

HOT WATER BATH	Temp. °R
Standard	672
M-1-I	670
% Deivation	0.30
Standard	672
M-1-O	670
% Deviation	0.30
Standard	
% Deviation	

Date: 10/16/89

Technician: D. Robert

I = Inlet Temperature
O = Outlet Temperature

Thermocouple Calibration Data

Type: GM - I - 002
GM - I - 001

ICE WATER BATH	Temp. °R
Standard	
% Deviation	
Standard	
% Deviation	
Standard	
% Deviation	

AMBIENT	Temp. °R
Standard	522 °R
GM-I-002	522 °R
% Deviation	0%
Standard	523 °R
GM-I-001	523 °R
% Deviation	0%
Standard	
% Deviation	

HOT WATER BATH	Temp. °R
Standard	662 °R
GM-I-002	662 °R
% Deivation	0%
Standard	661 °R
GM-I-001	661 °R
% Deviation	0%
Standard	
% Deviation	

Date: 10/19/90

Technician: L. S

Dry Gas Meter Inlet Thermocouples

Thermocouple Calibration Data

Type: 6M-0-002
6M-0-001

ICE WATER BATH	Temp. °R
Standard	
% Deviation	
Standard	
% Deviation	
Standard	
% Deviation	

AMBIENT	Temp. °R
Standard	523 °R
6M-0-002	523 °R
% Deviation	0%
Standard	525 °R
6M-0-001	525 °R
% Deviation	
Standard	
% Deviation	

HOT WATER BATH	Temp. °R
Standard	662 °R
6M-0-002	662 °R
% Deivation 0%	
Standard	662 °R
6M-0-001	662 °R
% Deviation 0%	
Standard	
% Deviation	

Date: 10/19/90

Technician: DS

Dry Gas Meter Outlet Temperatures

Thermocouple Calibration Data

Type: Impinger

ICE WATER BATH	Temp. °R
Standard	492
I-2	492
% Deviation	0.00
Standard	
% Deviation	
Standard	
% Deviation	

AMBIENT	Temp. °R
Standard	528
I-2	528
% Deviation	0.00
Standard	
% Deviation	
Standard	
% Deviation	

HOT WATER BATH	Temp. °R
Standard	672
I-2	668
% Deivation	0.60
Standard	
% Deviation	
Standard	
% Deviation	

Date: 9/12/89

Technician: D. Roberts

Condenser Outlet

THERMOCOUPLE TEMPERATURE CALIBRATION

ICE WATER BATH	Temp. °R
Standard	492
Thermocouple I-4	493
% Deviation	0.20
Standard	
Thermocouple	
% Deviation	
Standard	
Thermocouple	
% Deviation	

AMBIENT	Temp. °F
Standard	531
Thermocouple I-4	529
% Deviation	0.38
Standard	
Thermocouple	
% Deviation	
Standard	
Thermocouple	
% Deviation	

HOT WATER BATH	Temp. °R
Standard	688
Thermocouple I-4	685
% Deviation	0.44
Standard	
Thermocouple	
% Deviation	
Standard	
Thermocouple	
% Deviation	

Date: 10/17/84

Technician: D. Rhert

Condenser Outlet

Thermocouple Calibration Data

Type: 002

ICE WATER BATH	
Standard 498°R	Temp. °R 498°R
C-Outlet % Deviation 0%	
Standard % Deviation	
Standard % Deviation	

AMBIENT	
Standard 532°R	Temp. °R 532°R
C-Outlet % Deviation 0%	
Standard % Deviation	
Standard % Deviation	

HOT WATER BATH	
Standard 667°R	Temp. °R 667°R
C-Outlet % Deivation 0%	
Standard % Deviation	
Standard % Deviation	

Date: 10/25/90

Technician: [illegible]

Condenser Outlet Temperature

Thermocouple Calibration Data

Type: Oven Box Thermocouple

ICE WATER BATH	Temp. °R
Standard	492
OB-1	492
% Deviation	0.00
Standard	
% Deviation	
Standard	
% Deviation	

AMBIENT	Temp. °R
Standard	527
OB-1	525
% Deviation	0.38
Standard	
% Deviation	
Standard	
% Deviation	

HOT WATER BATH	Temp. °R
Standard	722
OB-1	721
% Deivation	0.14
Standard	
% Deviation	
Standard	
% Deviation	

Date: 9/12/89

Technician: D. Roberts

Thermocouple Calibration Data

Type: Oven box

ICE WATER BATH	Temp. °R
Standard	492
OB-2	494
% Deviation	0.40
Standard	
% Deviation	
Standard	
% Deviation	

AMBIENT	Temp. °R
Standard	531
OB-2	527
% Deviation	0.75
Standard	
% Deviation	
Standard	
% Deviation	

HOT ~~[illegible]~~ OVEN	Temp. °R
Standard	687
OB-2	688
% Deivation	0.15
Standard	
% Deviation	
Standard	
% Deviation	

Date: 10/17/89

Technician: D. Roberts

Thermocouple Calibration Data

Type: O-B - T - 001
O-B - T - 002

ICE WATER BATH	Temp. °R
Standard	
% Deviation	
Standard	
% Deviation	
Standard	
% Deviation	

AMBIENT	Temp. °R
Standard	525°R
OB-001	526°R
% Deviation	.19%
Standard	524°R
OB-002	524°R
% Deviation	0%
Standard	
% Deviation	

HOT WATER BATH	Temp. °R
Standard	662°R
OB-001	663°R
% Deivation	
Standard	662°R
OB-002	663°R
% Deviation	
Standard	
% Deviation	

Date: 10/19/90

Technician: D. S.

Oven Box Thermocouples

Thermocouple Calibration Data

Type: Probe

ICE WATER BATH	Temp. °R
Standard	495
P-3	493
% Deviation	0.4
Standard	495
T-4	494
% Deviation	0.2
Standard	
% Deviation	

AMBIENT	Temp. °R
Standard	532
P-3	530
% Deviation	0.4
Standard	532
T-4	530
% Deviation	0.4
Standard	
% Deviation	

HOT WATER BATH	Temp. °R
Standard	672
P-3	670
% Deivation	0.3
Standard	672
T-4	670
% Deviation	0.3
Standard	
% Deviation	

Date: 7 July '84

Technician: AR

Thermocouple Calibration Data

Type: PROBE

ICE WATER BATH	Temp. °R
Standard	492
P-2	492
% Deviation	0
Standard	492
P-1	492
% Deviation	0
Standard	492
P-4	492
% Deviation	0

AMBIENT	Temp. °R
Standard	530
P-2	528
% Deviation	0.4
Standard	530
P-1	528
% Deviation	0.4
Standard	530
P-4	528
% Deviation	0.4

HOT WATER BATH	Temp. °R
Standard	670
P-2	670
% Deivation	0
Standard	670
P-1	670
% Deviation	0
Standard	670
P-4	670
% Deviation	0

Date: AUGUST 21, 1989

Technician: [signature]

Galson
Technical Services, Inc.
2116 Berkeley Way
Berkeley, CA 94704
Tel: (415) 848-0389
Fax: (415) 848-0636

PITOT TUBE CALIBRATION
VERIFICATION OF CONSTRUCTION SPECIFICATIONS

Pitot ID: P7 Date: 6-1-90

1. D_t - external tubing diameter
   $0.188" < D_t < 0.375"$* — D_t = 0.375 Inches
2. $P = (P_a+P_b)/2$ — $P_a + P_b$ = 1.045 Inches
   $1.05\ D_t < P < 1.50\ D_t$* — P = 0.522 Inches
3. $Z = (P_A + P_B) \sin \gamma$ — γ = 2°
   $Z < 0.125"$ ** — Z = 0.036 Inches
4. $W = (P_A + P_B) \sin \sigma$ — σ = 1.0
   $W < 0.031"$ ** — W = 0.018 Inches
5. $\beta_A, \beta_B < 5°$ ** — β_A = 1°, β_B = 1°
6. $\alpha_A, \alpha_B < 10°$ ** — α_A = 1', α_B = 0

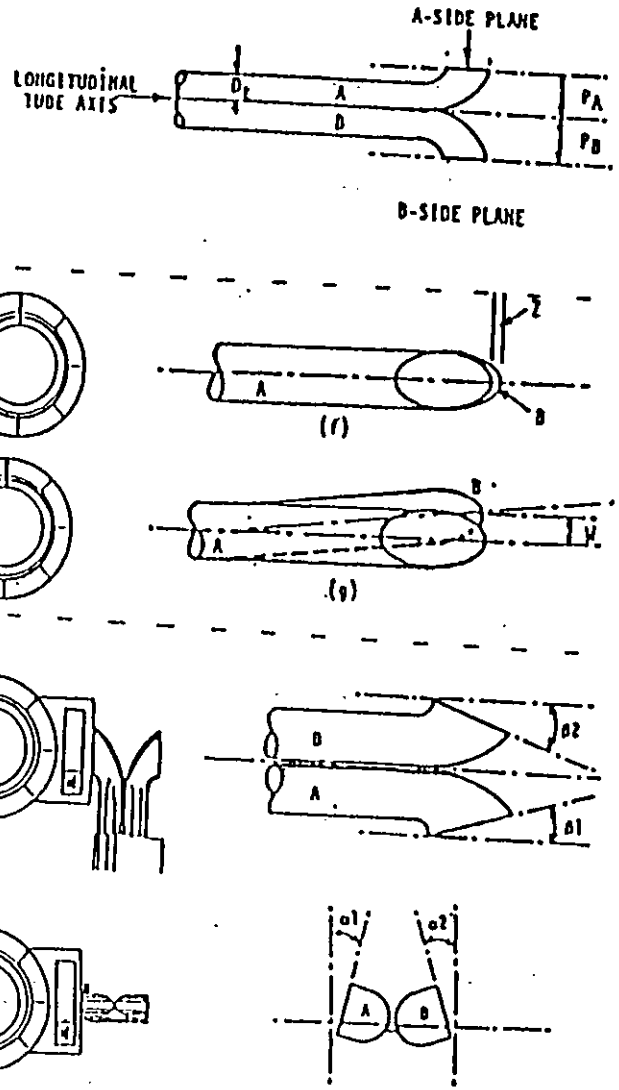

*Acceptable limits; "Standards of Performance for New Stationary Sources," Federal Register, 36 (247), December 23, 1971.

**Acceptable limits; Vollaro, R. F., "The Effects of Impact Opening Misalignment on the Value of the Type-S Pitot Tube Coefficient", U.S. EPA Emission Measurement Branch, Research Triangle Park, NC, October 1976

Technician CT/RP

Galson
Technical Services, Inc.
2116 Berkeley Way
Berkeley, CA 94704
Tel: (415) 848-0389
Fax: (415) 848-0838

PITOT TUBE CALIBRATION
VERIFICATION OF CONSTRUCTION SPECIFICATIONS

Pitot ID: P4 (72") Date: 6-1-90

1. D_t - external tubing diameter
   $0.188" < D_t < 0.375"$* D_t = 0.375 Inches

2. $P = (P_a+P_b)/2$ $P_a + P_b$ = 1.060 Inches
   $1.05\ D_t < P < 1.50\ D_t$* P = .503 Inches

3. $Z = (P_A + P_B) \sin \gamma$ γ = 1°
   $Z < 0.125"$ ** Z = 0.018 Inches

4. $W = (P_A + P_B) \sin \sigma$ σ = 0.5°
   $W < 0.031"$ ** W = 0.009 Inches

5. $\beta_A, \beta_B < 5°$ ** β_A = 0.5
   β_B = 1°

6. $\alpha_A, \alpha_B < 10°$ ** α_A = 1°
   α_B = 1°

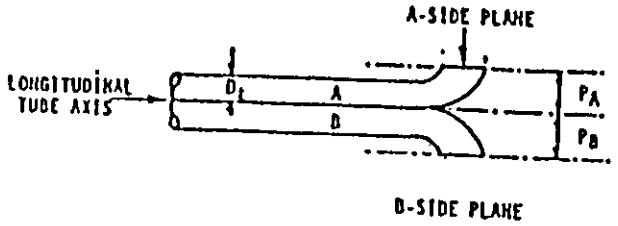

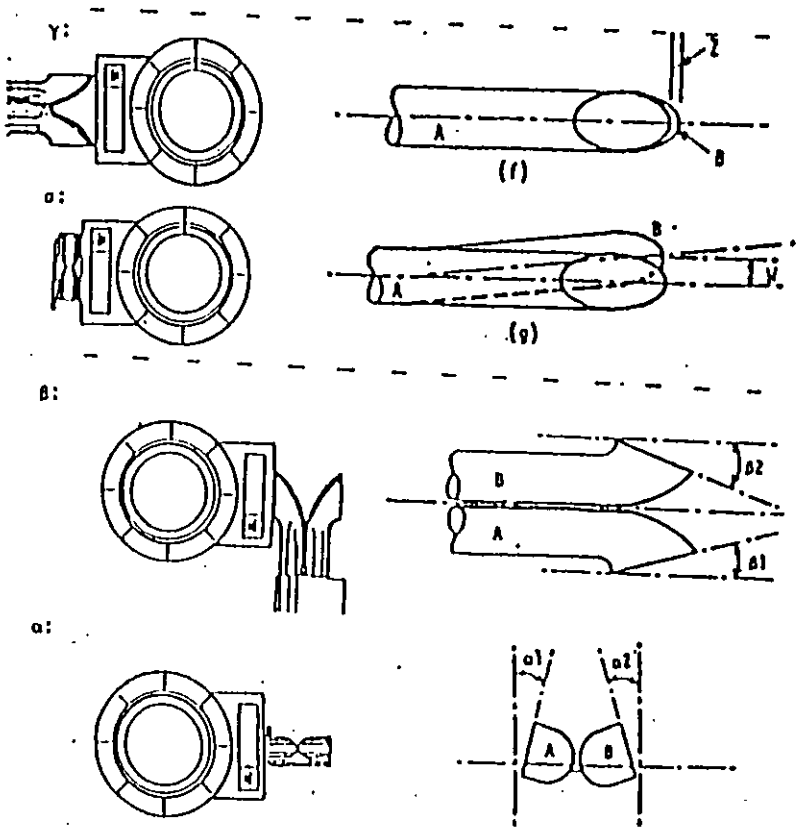

*Acceptable limits; "Standards of Performance for New Stationary Sources," Federal Register, 36 (247), December 23, 1971.

**Acceptable limits; Vollaro, R. F., "The Effects of Impact Opening Misalignment on the Value of the Type-S Pitot Tube Coefficient", U.S. EPA Emission Measurement Branch, Research Triangle Park, NC, October 1976

Technician: MT / DD

ON-SITE MONITOR CALIBRATION DATA

Galson Technical Services

PRE-TEST & POST-TEST SYSTEM DRIFT CHECKS

Comments:

Plant I. D. Georgia Pacific Project No. 57-077, GP

Source Unit 3 Exhaust Operator DR

Pollutant CO Analyzer I. D. TECO Model 48

Run No. 1 Date/Time 7/2/90 10:27-1255

0-5000 ppm

	Analyzer Calibration Response	Initial values: System Calibration Response	Initial values: System bias (% of span)	Final values: System Calibration Response	Final values: System bias (% of span)	Drift (% of span)
Zero gas	0.0	0.0	0.0	0.0	0.0	0.0
Mid-range	767	767	0.0	764	-0.06	-0.06

Run No. 2 Date/Time 7/2/90 1455-1719

	Analyzer Calibration Response	Initial values: System Calibration Response	Initial values: System bias (% of span)	Final values: System Calibration Response	Final values: System bias (% of span)	Drift (% of span)
Zero gas	0.0	0.0	0.0	0.0	0.0	0.0
Mid-range	767	767	0.0	777	+0.2	+0.2

Run No. 3 Date/Time 7/3/90 0830-0925

	Analyzer Calibration Response	Initial values: System Calibration Response	Initial values: System bias (% of span)	Final values: System Calibration Response	Final values: System bias (% of span)	Drift (% of span)
Zero gas	0.0	0.0	0.0	0.0	0.0	0.0
Mid-range	767	767	0.0	760	-0.14	-0.14

$$\text{System calibration bias} = \frac{\text{System calibration response} - \text{Analyzer calibration response}}{\text{Span}} \times 100$$

$$\text{Drift} = \frac{\text{Final system response} - \text{Initial system calibration response response}}{\text{Span}} \times 100$$

Galson Technical Services

PRE-TEST & POST-TEST SYSTEM DRIFT CHECKS

Plant I. D. [illegible] Project No. [illegible]

Source Unit 3 Boiler Operator [illegible]

Pollutant CO Analyzer I. D. [illegible]

Comments:

Run No. 4 Date/Time 7/18/90 1005-1222

	Analyzer Calibration Response	Initial values: System Calibration Response	Initial values: System bias (% of span)	Final values: System Calibration Response	Final values: System bias (% of span)	Drift (% of span)
Zero gas	0.0	0.0	0.0	0.0	0.0	0.0
Mid-range	767	767	0.0	747	-0.4	-0.4

Run No. 5 Date/Time 7/18/90 900-945

	Analyzer Calibration Response	Initial values: System Calibration Response	Initial values: System bias (% of span)	Final values: System Calibration Response	Final values: System bias (% of span)	Drift (% of span)
Zero gas	[illegible]	0.0	0.0	0.0	0.0	0.0
Mid-range	[illegible]	767	0.0	750	-0.3	-0.3

Run No. 6 Date/Time 7/18/90 1005-1050

	Analyzer Calibration Response	Initial values: System Calibration Response	Initial values: System bias (% of span)	Final values: System Calibration Response	Final values: System bias (% of span)	Drift (% of span)
Zero gas	0.0	0.0	0.0	0.0	0.0	0.0
Mid-range	[illegible]	767	0.0	769	+0.04	+0.04

$$\text{System calibration bias} = \frac{\text{System calibration response} - \text{Analyzer calibration response}}{\text{Span}} \times 100$$

$$\text{Drift} = \frac{\text{Final system response} - \text{Initial system calibration response response}}{\text{Span}} \times 100$$

Galson Technical Services

PRE-TEST & POST-TEST SYSTEM DRIFT CHECKS

Plant I. D. Georgia Pacific

Project No. 59-072.GP

Source Unit 3 Exhaust

Operator DR

Pollutant CO

Analyzer I. D. TECO Model 48

Comments:

Run No. 7

Date/Time 7/18/90 1111-1156

	Analyzer Calibration Response	Initial values: System Calibration Response	Initial values: System bias (% of span)	Final values: System Calibration Response	Final values: System bias (% of span)	Drift (% of span)
Zero gas	0.0	0.0	0.0	0.0	0.0	0.0
Mid-range	767	767	0.0	764	-0.06	-0.06

Run No. _____ Date/Time _____

	Analyzer Calibration Response	Initial values: System Calibration Response	Initial values: System bias (% of span)	Final values: System Calibration Response	Final values: System bias (% of span)	Drift (% of span)
Zero gas						
Mid-range						

Run No. _____ Date/Time _____

	Analyzer Calibration Response	Initial values: System Calibration Response	Initial values: System bias (% of span)	Final values: System Calibration Response	Final values: System bias (% of span)	Drift (% of span)
Zero gas						
Mid-range						

$$\text{System calibration bias} = \frac{\text{System calibration response} - \text{Analyzer calibration response}}{\text{Span}} \times 100$$

$$\text{Drift} = \frac{\text{Final system response} - \text{Initial system calibration response response}}{\text{Span}} \times 100$$

Galson Technical Services

PRE-TEST & POST-TEST SYSTEM DRIFT CHECKS

Plant I. D. Georgia Pacific Project No. 57-072.6P

Source Unit 3 Exhaust Operator AR

Pollutant CO_2 Analyzer I. D. HORIBA PIR-200

Comments:

Run No. 1 Date/Time 7/12/90 10:27 - 1255

C-15 Bottle

	Analyzer Calibration Response	Initial values: System Calibration Response	Initial values: System bias (% of span)	Final values: System Calibration Response	Final values: System bias (% of span)	Final values: Drift (% of span)
Zero gas	0.0	0.0	0.0	0.0	0.0	0.0
Mid-range	10.2%	10.2%	0.0	10.2%	0.0	0.0

Run No. 2 Date/Time 7/12/90 1455 - 1717

	Analyzer Calibration Response	Initial values: System Calibration Response	Initial values: System bias (% of span)	Final values: System Calibration Response	Final values: System bias (% of span)	Final values: Drift (% of span)
Zero gas	0.0	0.0	0.0	0.0	0.0	0.0
Mid-range	10.2%	10.2%	0.0	10.2	0.0	0.0

Run No. 3 Date/Time 7/13/90 0855 - 0925

	Analyzer Calibration Response	Initial values: System Calibration Response	Initial values: System bias (% of span)	Final values: System Calibration Response	Final values: System bias (% of span)	Final values: Drift (% of span)
Zero gas	0.0	0.0	0.0	0.0	0.0	0.0
Mid-range	10.2	[illegible]	0.0	10.2	0.0	[illegible]

$$\text{System calibration bias} = \frac{\text{System calibration response} - \text{Analyzer calibration response}}{\text{Span}} \times 100$$

$$\text{Drift} = \frac{\text{Final system response} - \text{Initial system calibration response response}}{\text{Span}} \times 100$$

Galson Technical Services

PRE-TEST & POST-TEST SYSTEM DRIFT CHECKS

Comments:

Plant I. D. Georgia Pacific Project No. [illegible] 61

Source Unit 3 Exhaust Operator [illegible]

Pollutant CO_2 Analyzer I. D. Horiba PIR-2000

Run No. 4 Date/Time 7/16/90 1005-1228

	Initial values			Final values		
	Analyzer Calibration Response	System Calibration Response	System bias (% of span)	System Calibration Response	System bias (% of span)	Drift (% of span)
Zero gas	0.0	0.0	0.0	0.15	+0.15	+0.15
Mid-range	10.2	10.2	0.0	10.2	0.0	0.0

Run No. 5 Date/Time 7/18/90 0920-945

	Initial values			Final values		
	Analyzer Calibration Response	System Calibration Response	System bias (% of span)	System Calibration Response	System bias (% of span)	Drift (% of span)
Zero gas	0.0	0.0	0.0	0.0	0.0	0.0
Mid-range	10.2	10.2	0.0	10.2	0.0	0.0

Run No. 6 Date/Time 7/18/90 1005-1050

	Initial values			Final values		
	Analyzer Calibration Response	System Calibration Response	System bias (% of span)	System Calibration Response	System bias (% of span)	Drift (% of span)
Zero gas	0.0	0.0	0.0	0.0	0.0	0.0
Mid-range	10.2	10.2	0.0	10.2	0.0	0.0

$$\text{System calibration bias} = \frac{\text{System calibration response} - \text{Analyzer calibration response}}{\text{Span}} \times 100$$

$$\text{Drift} = \frac{\text{Final system response} - \text{Initial system calibration response response}}{\text{Span}} \times 100$$

Galson Technical Services

PRE-TEST & POST-TEST SYSTEM DRIFT CHECKS

Plant I. D. Georgia Pacific Project No. 59-072.GP

Source Unit 3 Exhaust Operator DR

Pollutant CO_2 Analyzer I. D. HORIBA PIR 2000

Comments:

Run No. 7 Date/Time 7/8/90 1111–1156

	Analyzer Calibration Response	Initial values: System Calibration Response	Initial values: System bias (% of span)	Final values: System Calibration Response	System bias (% of span)	Drift (% of span)
Zero gas	0.0	0.0	0.0	0.0	0.0	0.0
Mid-range	10.2	10.2	0.0	10.35	1.0%	1.0

Run No. _____ Date/Time _____

	Analyzer Calibration Response	Initial values: System Calibration Response	Initial values: System bias (% of span)	Final values: System Calibration Response	System bias (% of span)	Drift (% of span)
Zero gas						
Mid-range						

Run No. _____ Date/Time _____

	Analyzer Calibration Response	Initial values: System Calibration Response	Initial values: System bias (% of span)	Final values: System Calibration Response	System bias (% of span)	Drift (% of span)
Zero gas						
Mid-range						

$$\text{System calibration bias} = \frac{\text{System calibration response} - \text{Analyzer calibration response}}{\text{Span}} \times 100$$

$$\text{Drift} = \frac{\text{Final system response} - \text{Initial system calibration response response}}{\text{Span}} \times 100$$

Galson Technical Services

PRE-TEST & POST-TEST SYSTEM DRIFT CHECKS

Plant I. D. Georgia Pacific Project No. 89-[illegible]

Source Unit 3 Exhaust Operator DR

Pollutant O_2 Analyzer I. D. IR 2200

Comments:

Run No. 1 Date/Time 7/12/90 10:27 – 1255

0-25% scale

	Analyzer Calibration Response	Initial values: System Calibration Response	Initial values: System bias (% of span)	Final values: System Calibration Response	Final values: System bias (% of span)	Drift (% of span)
Zero gas	0.0	0.0	0.0	0.0	0.0	0.0
Mid-range	12.0	12.0	0.0	12.1	+0.4	+0.4

Run No. 2 Date/Time 7/12/90 1455 – 1719

	Analyzer Calibration Response	Initial values: System Calibration Response	Initial values: System bias (% of span)	Final values: System Calibration Response	Final values: System bias (% of span)	Drift (% of span)
Zero gas	0.0	0.0	0.0	0.0	0.0	0.0
Mid-range	12.0	12.0	0.0	12.0	0.0	0.0

Run No. 3 Date/Time 7/12/90 0830 – 925

	Analyzer Calibration Response	Initial values: System Calibration Response	Initial values: System bias (% of span)	Final values: System Calibration Response	Final values: System bias (% of span)	Drift (% of span)
Zero gas	[illegible]	0.0	[illegible]	0.0	0.0	0.0
Mid-range	[illegible]	[illegible]	0.0	12.0	0.0	0.0

$$\text{System calibration bias} = \frac{\text{System calibration response} - \text{Analyzer calibration response}}{\text{Span}} \times 100$$

$$\text{Drift} = \frac{\text{Final system response} - \text{Initial system calibration response response}}{\text{Span}} \times 100$$

Galson Technical Services

PRE-TEST & POST-TEST SYSTEM DRIFT CHECKS

Plant I. D. Georgia Pacific Project No. 90-70.GP

Source Unit 3 Exhaust Operator DR

Pollutant O_2 Analyzer I. D. IR 2200

Comments:

Run No. 4 Date/Time 7/18/90 1005-1228

	Analyzer Calibration Response	Initial values: System Calibration Response	Initial values: System bias (% of span)	Final values: System Calibration Response	Final values: System bias (% of span)	Drift (% of span)
Zero gas	0.0	0.0	0.0	0.0	0.0	0.0
Mid-range	12.0	12.0	0.0	12.2	+0.8	+0.8

Run No. 5 Date/Time 7/18/90 700-945

	Analyzer Calibration Response	Initial values: System Calibration Response	Initial values: System bias (% of span)	Final values: System Calibration Response	Final values: System bias (% of span)	Drift (% of span)
Zero gas	0.0	0.0	0.0	0.0	0.0	0.0
Mid-range	19.6	19.6	0.0	19.6	0.0	0.0

Run No. 6 Date/Time 7/18/90 1005-1050

	Analyzer Calibration Response	Initial values: System Calibration Response	Initial values: System bias (% of span)	Final values: System Calibration Response	Final values: System bias (% of span)	Drift (% of span)
Zero gas	0.0	0.0	0.0	0.0	0.0	0.0
Mid-range	19.6	19.6	0.0	19.6	0.0	0.0

$$\text{System calibration bias} = \frac{\text{System calibration response} - \text{Analyzer calibration response}}{\text{Span}} \times 100$$

$$\text{Drift} = \frac{\text{Final system response} - \text{Initial system calibration response response}}{\text{Span}} \times 100$$

Galson Technical Services

PRE-TEST & POST-TEST SYSTEM DRIFT CHECKS

Plant I. D. Georgia Pacific

Project No. 59-072.GP

Source Unit 3 Exhaust

Operator NR

Pollutant O_2

Analyzer I. D. IR 2200

Comments:

Run No. 7

Date/Time 7/18/96 1111 – 1156

	Analyzer Calibration Response	Initial values: System Calibration Response	Initial values: System bias (% of span)	Final values: System Calibration Response	Final values: System bias (% of span)	Drift (% of span)
Zero gas	0.0	0.0	0.0	0.0	0.0	0.0
Mid-range	12.0	12.0	0.0	12.1	+0.4	+0.4

Run No. _____ Date/Time _____

	Analyzer Calibration Response	Initial values: System Calibration Response	Initial values: System bias (% of span)	Final values: System Calibration Response	Final values: System bias (% of span)	Drift (% of span)
Zero gas						
Mid-range						

Run No. _____ Date/Time _____

	Analyzer Calibration Response	Initial values: System Calibration Response	Initial values: System bias (% of span)	Final values: System Calibration Response	Final values: System bias (% of span)	Drift (% of span)
Zero gas						
Mid-range						

$$\text{System calibration bias} = \frac{\text{System calibration response} - \text{Analyzer calibration response}}{\text{Span}} \times 100$$

$$\text{Drift} = \frac{\text{Final system response} - \text{Initial system calibration response response}}{\text{Span}} \times 100$$

Galson Technical Services

PRE-TEST & POST-TEST SYSTEM DRIFT CHECKS

Plant I. D. Georgia Pacific Project No. 91-072.GF

Source Unit 3 Exhaust Operator AR

Pollutant THC Analyzer I. D. Rotfloch RS5

Comments:

Run No. 1 Date/Time 7/12/90 10:27-1255

0-500ppm scale

	Analyzer Calibration Response	Initial values: System Calibration Response	Initial values: System bias (% of span)	Final values: System Calibration Response	Final values: System bias (% of span)	Drift (% of span)
Zero gas	0.0	0.0	0.0	0.0	0.0	0.0
Mid-range	453	453	0.0	465	+2.4	+2.4

Run No. 2 Date/Time 7/12/90 1455-1714

	Analyzer Calibration Response	Initial values: System Calibration Response	Initial values: System bias (% of span)	Final values: System Calibration Response	Final values: System bias (% of span)	Drift (% of span)
Zero gas	0.0	0.0	0.0	0.0	0.0	0.0
Mid-range	453	453	0.0	450	-0.6	-0.6

Run No. 3 Date/Time 7/13/90 [illegible]

	Analyzer Calibration Response	Initial values: System Calibration Response	Initial values: System bias (% of span)	Final values: System Calibration Response	Final values: System bias (% of span)	Drift (% of span)
Zero gas	0.0	0.0	0.0	0.0	0.0	0.0
Mid-range	453	453	0.0	440	-2.6	[illegible]

$$\text{System calibration bias} = \frac{\text{System calibration response} - \text{Analyzer calibration response}}{\text{Span}} \times 100$$

$$\text{Drift} = \frac{\text{Final system response} - \text{Initial system calibration response response}}{\text{Span}} \times 100$$

Galson Technical Services

PRE-TEST & POST-TEST SYSTEM DRIFT CHECKS

Comments:

Plant I. D. Georgia Pacific

Project No. [illegible]

Source Unit 3 Exhaust

Operator DR

Pollutant THC

Analyzer I. D. Rat Fisch RS-55

Run No. 4

Date/Time 7/16/90 1005-1228

	Analyzer Calibration Response	Initial values: System Calibration Response	Initial values: System bias (% of span)	Final values: System Calibration Response	Final values: System bias (% of span)	Final values: Drift (% of span)
Zero gas	0.0	0.0	0.0	0.0	0.0	0.0
Mid-range	453	453	0.0	440	-2.6	-2.6

Run No. 5

Date/Time 7/16/90 0900-0945

	Analyzer Calibration Response	Initial values: System Calibration Response	Initial values: System bias (% of span)	Final values: System Calibration Response	Final values: System bias (% of span)	Final values: Drift (% of span)
Zero gas	[illegible]	[illegible]	[illegible]	0.0	0.0	0.0
Mid-range	[illegible]	453	0.0	445	-1.6	-1.6

Run No. 6

Date/Time 7/16/90 1005-1050

	Analyzer Calibration Response	Initial values: System Calibration Response	Initial values: System bias (% of span)	Final values: System Calibration Response	Final values: System bias (% of span)	Final values: Drift (% of span)
Zero gas	0.0	0.0	0.0	0.0	0.0	0.0
Mid-range	453	453	0.0	445	-1.6	-1.6

$$\text{System calibration bias} = \frac{\text{System calibration response} - \text{Analyzer calibration response}}{\text{Span}} \times 100$$

$$\text{Drift} = \frac{\text{Final system response} - \text{Initial system calibration response response}}{\text{Span}} \times 100$$

Galson Technical Services

PRE-TEST & POST-TEST SYSTEM DRIFT CHECKS

Plant I. D. Georgia Pacific Project No. 54-072.G1

Source Unit 3 Exhaust Operator KR

Pollutant THC Analyzer I. D. Rat Fish RS55

Comments:

Run No. 7 Date/Time 7/18/90 1111-1156

	Initial values			Final values		
	Analyzer Calibration Response	System Calibration Response	System bias (% of span)	System Calibration Response	System bias (% of span)	Drift (% of span)
Zero gas	0.0	0.0	0.0	0.0	0.0	0.0
Mid-range	453	458	0.0	453	0.0	0.0

Run No. _____ Date/Time _____

	Initial values			Final values		
	Analyzer Calibration Response	System Calibration Response	System bias (% of span)	System Calibration Response	System bias (% of span)	Drift (% of span)
Zero gas						
Mid-range						

Run No. _____ Date/Time _____

	Initial values			Final values		
	Analyzer Calibration Response	System Calibration Response	System bias (% of span)	System Calibration Response	System bias (% of span)	Drift (% of span)
Zero gas						
Mid-range						

$$\text{System calibration bias} = \frac{\text{System calibration response} - \text{Analyzer calibration response}}{\text{Span}} \times 100$$

$$\text{Drift} = \frac{\text{Final system response} - \text{Initial system calibration response response}}{\text{Span}} \times 100$$

Galson -Technical Services

PRE-TEST & POST-TEST SYSTEM DRIFT CHECKS

Plant I. D. Georgia Pacific

Project No. 59072.GP

Source Boiler 3 Exhaust

Operator DR

Pollutant CO

Analyzer I. D. TECO Model 48

Comments:

Run No. 1

Date/Time 11/3/90 0955-1334

0-2000 ppm

	Analyzer Calibration Response	Initial values: System Calibration Response	Initial values: System bias (% of span)	Final values: System Calibration Response	Final values: System bias (% of span)	Drift (% of span)
Zero gas	0.0	0.0	0.0	0.0	0.0	0.0
Mid-range	2059	2059	0.0	2078	+1.0	+1.0

Run No. 2

Date/Time 11/3/90 1534-1950

	Analyzer Calibration Response	Initial values: System Calibration Response	Initial values: System bias (% of span)	Final values: System Calibration Response	Final values: System bias (% of span)	Drift (% of span)
Zero gas	0.0	0.0	0.0	0.0	0.0	0.0
Mid-range	2059	2059	0.0	2103	+2.2	+2.2

Run No. 3

Date/Time 11/4/90 0920-[illegible]

	Analyzer Calibration Response	Initial values: System Calibration Response	Initial values: System bias (% of span)	Final values: System Calibration Response	Final values: System bias (% of span)	Drift (% of span)
Zero gas	0.0	0.0	0.0	0.0	0.0	0.0
Mid-range	2059	2059	0.0	2059	+1.0	-1.0

$$\text{System calibration bias} = \frac{\text{System calibration response} - \text{Analyzer calibration response}}{\text{Span}} \times 100$$

$$\text{Drift} = \frac{\text{Final system response} - \text{Initial system calibration response response}}{\text{Span}} \times 100$$

Galson Technical Services

PRE-TEST & POST-TEST SYSTEM DRIFT CHECKS

Plant I. D. Georgia Pacific Project No. 9907.2.GP

Source Boiler #3 Exhaust Operator DK

Pollutant CO Analyzer I. D. TECO Model 48

Comments:

Run No. 4 Date/Time 11/4/90 1350-1455

	Analyzer Calibration Response	Initial values: System Calibration Response	Initial values: System bias (% of span)	Final values: System Calibration Response	Final values: System bias (% of span)	Final values: Drift (% of span)
Zero gas	0.0	0.0	0.0	0.0	0.0	0.0
Mid-range	2059	2059	0.0	2041	-0.9	-0.9

Run No. _____ Date/Time _____

	Analyzer Calibration Response	Initial values: System Calibration Response	Initial values: System bias (% of span)	Final values: System Calibration Response	Final values: System bias (% of span)	Final values: Drift (% of span)
Zero gas						
Mid-range						

Run No. _____ Date/Time _____

	Analyzer Calibration Response	Initial values: System Calibration Response	Initial values: System bias (% of span)	Final values: System Calibration Response	Final values: System bias (% of span)	Final values: Drift (% of span)
Zero gas						
Mid-range						

$$\text{System calibration bias} = \frac{\text{System calibration response} - \text{Analyzer calibration response}}{\text{Span}} \times 100$$

$$\text{Drift} = \frac{\text{Final system response} - \text{Initial system calibration response response}}{\text{Span}} \times 100$$

Galson Technical Services

PRE-TEST & POST-TEST SYSTEM DRIFT CHECKS

Comments:

Plant I. D. Georgia Pacific Project No. 54-072.6P

Source Boiler #3 Exhaust Operator NR

Pollutant CO_2 Analyzer I. D. HORIBA PIR 2000

Run No. 1 Date/Time 11/3/90 0955-1334

	Analyzer Calibration Response	Initial values: System Calibration Response	Initial values: System bias (% of span)	Final values: System Calibration Response	System bias (% of span)	Drift (% of span)
Zero gas	0.0	0.0	0.0	0.0	0.0	0.0
Mid-range	10.2	10.2	0.0	10.5	2.0	2.0

Run No. 2 Date/Time 11/3/90 1534-1950

	Analyzer Calibration Response	Initial values: System Calibration Response	Initial values: System bias (% of span)	Final values: System Calibration Response	System bias (% of span)	Drift (% of span)
Zero gas	0.0	0.0	0.0	0.0	0.0	0.0
Mid-range	10.2	10.2	0.0	10.2	0.0	0.0

Run No. 3 Date/Time 11/4/90 0920-1255

	Analyzer Calibration Response	Initial values: System Calibration Response	Initial values: System bias (% of span)	Final values: System Calibration Response	System bias (% of span)	Drift (% of span)
Zero gas	0.0	0.0	0.0	0.0	0.0	0.0
Mid-range	10.2	10.2	0.0	10.2	0.0	0.0

$$\text{System calibration bias} = \frac{\text{System calibration response} - \text{Analyzer calibration response}}{\text{Span}} \times 100$$

$$\text{Drift} = \frac{\text{Final system response} - \text{Initial system calibration response response}}{\text{Span}} \times 100$$

PRE-TEST & POST-TEST SYSTEM DRIFT CHECKS

Galson Technical Services

Comments:

Plant I. D. Georgia Pacific Project No. 59-072GP

Source Boiler #2 Exhaust Operator DR

Pollutant CO_2 Analyzer I. D. HORIBA PIR-2000

Run No. 4 Date/Time 11/4/90 1350-1455

	Analyzer Calibration Response	Initial values: System Calibration Response	Initial values: System bias (% of span)	Final values: System Calibration Response	Final values: System bias (% of span)	Final values: Drift (% of span)
Zero gas	0.0	0.0	0.0	0.0	0.0	0.0
Mid-range	10.2	10.2	10.2	9.9	-2.0	-2.0

Run No. _____ Date/Time _____

	Analyzer Calibration Response	Initial values: System Calibration Response	Initial values: System bias (% of span)	Final values: System Calibration Response	Final values: System bias (% of span)	Final values: Drift (% of span)
Zero gas						
Mid-range						

Run No. _____ Date/Time _____

	Analyzer Calibration Response	Initial values: System Calibration Response	Initial values: System bias (% of span)	Final values: System Calibration Response	Final values: System bias (% of span)	Final values: Drift (% of span)
Zero gas						
Mid-range						

$$\text{System calibration bias} = \frac{\text{System calibration response} - \text{Analyzer calibration response}}{\text{Span}} \times 100$$

$$\text{Drift} = \frac{\text{Final system response} - \text{Initial system calibration response response}}{\text{Span}} \times 100$$

Galson -Technical Services

Comments:

PRE-TEST & POST-TEST SYSTEM DRIFT CHECKS

Plant I. D. Georgia Pacific Project No. 59-072.GP

Source Boiler 3 Exhaust Operator DR

Pollutant O_2 Analyzer I. D. IR 2200

Run No. 1 Date/Time 11/3/90 0955-1334

	Analyzer Calibration Response	Initial values: System Calibration Response	Initial values: System bias (% of span)	Final values: System Calibration Response	Final values: System bias (% of span)	Drift (% of span)
Zero gas	0.0	0.0	0.0	0.0	0.0	0.0
Mid-range	9.7	9.7	0.0	9.9	+0.8	+0.8

Run No. 2 Date/Time 11/3/90 1534-1950

	Analyzer Calibration Response	Initial values: System Calibration Response	Initial values: System bias (% of span)	Final values: System Calibration Response	Final values: System bias (% of span)	Drift (% of span)
Zero gas	0.0	0.0	0.0	0.0	0.0	0.0
Mid-range	9.7	9.7	0.0	9.7	0.0	0.0

Run No. 3 Date/Time 11/4/90 0920-1255

	Analyzer Calibration Response	Initial values: System Calibration Response	Initial values: System bias (% of span)	Final values: System Calibration Response	Final values: System bias (% of span)	Drift (% of span)
Zero gas	0.0	0.0	0.0	0.0	0.0	0.0
Mid-range	9.7	9.7	0.0	9.7	0.0	0.0

$$\text{System calibration bias} = \frac{\text{System calibration response} - \text{Analyzer calibration response}}{\text{Span}} \times 100$$

$$\text{Drift} = \frac{\text{Final system response} - \text{Initial system calibration response response}}{\text{Span}} \times 100$$

Galson Technical Services

PRE-TEST & POST-TEST SYSTEM DRIFT CHECKS

Plant I. D. Georgia Pacific

Project No. 57-072.GP

Source Boiler 3 Exhaust

Operator DR

Pollutant O_2

Analyzer I. D. IR2200

Comments:

Run No. 4

Date/Time 11/4/90 1350-1455

	Analyzer Calibration Response	Initial values: System Calibration Response	Initial values: System bias (% of span)	Final values: System Calibration Response	Final values: System bias (% of span)	Drift (% of span)
Zero gas	0.0	0.0	0.0	0.0	0.0	0.0
Mid-range	9.7	9.7	0.0	9.7	0.0	0.0

Run No. _____

Date/Time _____

	Analyzer Calibration Response	Initial values: System Calibration Response	Initial values: System bias (% of span)	Final values: System Calibration Response	Final values: System bias (% of span)	Drift (% of span)
Zero gas						
Mid-range						

Run No. _____

Date/Time _____

	Analyzer Calibration Response	Initial values: System Calibration Response	Initial values: System bias (% of span)	Final values: System Calibration Response	Final values: System bias (% of span)	Drift (% of span)
Zero gas						
Mid-range						

$$\text{System calibration bias} = \frac{\text{System calibration response} - \text{Analyzer calibration response}}{\text{Span}} \times 100$$

$$\text{Drift} = \frac{\text{Final system response} - \text{Initial system calibration response response}}{\text{Span}} \times 100$$

Galson Technical Services

PRE-TEST & POST-TEST SYSTEM DRIFT CHECKS

Comments:

Plant I. D. Georgia Pacific

Project No. 59-072.GP

Source Boiler #3 Exhaust

Operator DR

Pollutant THC

Analyzer I. D. Rattfisch R555

Run No. 1

Date/Time 11/3/90 0955-1334

	Analyzer Calibration Response	Initial values: System Calibration Response	Initial values: System bias (% of span)	Final values: System Calibration Response	Final values: System bias (% of span)	Final values: Drift (% of span)
Zero gas	0.0	5.0	5.0	0.0	0.0	-7.0
Mid-range	453	453	0.0	450	-0.6	-0.6

Run No. 2

Date/Time 11/3/90 1534-1950

	Analyzer Calibration Response	Initial values: System Calibration Response	Initial values: System bias (% of span)	Final values: System Calibration Response	Final values: System bias (% of span)	Final values: Drift (% of span)
Zero gas	0.0	0.0	0.0	-5.0	-1.0	-1.0
Mid-range	453	453	0.0	440	-2.6	-2.6

Run No. 3

Date/Time 11/4/90 0920-1255

	Analyzer Calibration Response	Initial values: System Calibration Response	Initial values: System bias (% of span)	Final values: System Calibration Response	Final values: System bias (% of span)	Final values: Drift (% of span)
Zero gas	0.0	0.0	0.0	0.0	0.0	0.0
Mid-range	40.6	40.6	0.0	30	-2.1	-2.1

$$\text{System calibration bias} = \frac{\text{System calibration response} - \text{Analyzer calibration response}}{\text{Span}} \times 100$$

$$\text{Drift} = \frac{\text{Final system response} - \text{Initial system calibration response response}}{\text{Span}} \times 100$$

Galson Technical Services

PRE-TEST & POST-TEST SYSTEM DRIFT CHECKS

Plant I. D. Georgia Pacific Project No. 59-072.6P

Source Boiler 3 Exhaust Operator DR

Pollutant THC Analyzer I. D. Rotfisher RS53

Comments:

Run No. 4 Date/Time 11/4/90 1350-1455

	Initial values			Final values		
	Analyzer Calibration Response	System Calibration Response	System bias (% of span)	System Calibration Response	System bias (% of span)	Drift (% of span)
Zero gas	0.0	0.0	0.0	-5.0	-1.0	-1.0
Mid-range	40.6	40.6	0.0	50	+1.9	+1.9

Run No. _____ Date/Time _____

	Initial values			Final values		
	Analyzer Calibration Response	System Calibration Response	System bias (% of span)	System Calibration Response	System bias (% of span)	Drift (% of span)
Zero gas						
Mid-range						

Run No. _____ Date/Time _____

	Initial values			Final values		
	Analyzer Calibration Response	System Calibration Response	System bias (% of span)	System Calibration Response	System bias (% of span)	Drift (% of span)
Zero gas						
Mid-range						

$$\text{System calibration bias} = \frac{\text{System calibration response} - \text{Analyzer calibration response}}{\text{Span}} \times 100$$

$$\text{Drift} = \frac{\text{Final system response} - \text{Initial system calibration response response}}{\text{Span}} \times 100$$

POST-TEST CALIBRATION DATA

Galson
Technical Services, Inc.
2116 Berkeley Way
Berkeley, CA 94704
Tel: (415) 848-0389

POST TEST CALIBRATION - DRY GAS METER

Plant GEORGIA PACIFIC Job # 89-272 GP
Source UNIT 3 Meter Box ID 002
Barometric Pressure, in Hg 29.95 Date 7/20/90

ORIFICE READING ($\Delta H_@$) in. H2O	WET TEST METER GAS VOLUME (Vw) ft3	WET TEST METER TEMP. (Tw) °F	DRY GAS METER GAS VOLUME (Vo) ft3	TEMPERATURE DATA °F Time	$T_{D\ in}$	$T_{D\ out}$	$T_{D\ avg}$	TIME Δt min.	γ	$\Delta H_@$
1.0	5	532	172.688		71	70	532	9.33	1.000	1.96
			167.698		73	71				
			4.990		74	71				
					74	72				
1.0	5	532	177.686		74	72	534.3	9.38	1.002	1.97
			172.688		75	73				
			4.998		76	73				
					77	74				
1.0	5	532	182.688		77	74	536.4	9.43	1.005	1.99
			177.686		77	75				
			5.002		78	76				
					78	76				

	γ	$\Delta H_@$
AVERAGE	1.002	1.97
PRE-TEST γ	1.004	1.94

$$\gamma = \frac{V_w}{V_D}\left(\frac{T_{D\ avg}+460}{T_w+460}\right)\frac{P_b}{\left(P_b+\frac{\Delta H_@}{13.5}\right)}$$

Vacuum Setting, in. Hg. 6"

$$\Delta H_@ = 0.0317\,\Delta H_D\left(\frac{t}{V_w}\right)^2\frac{(T_w+460)^2}{P_b\,(T_D+460)}$$

POST TEST CALIBRATION - TEMPERATURE SENSORS

	Ambient (°R)	% Diff.	Other (°R)	% Diff.
Reference	530	0	672	0
Stack Thermocouple ID#	530		672	
Reference	528	0	672	0
Gas Meter Inlet ID#	528		672	
Reference	528	0	672	0
Gas Meter Outlet ID#	528		672	
Reference	528	0.2	672	0.1
Condenser Outlet ID#	529		673	
Reference	530	0	729	0.3
Heated Oven Box ID#	530		727	

Technician: TZ Date: 7/20/90

NA = Not Applicable

Galson
Technical Services, Inc.
2116 Berkeley Way
Berkeley, CA 94704
Tel: (415) 848-0389

POST TEST CALIBRATION - DRY GAS METER

Plant GEORGIA PACIFIC Job # 59-072GP
Source UNIT 3 Meter Box ID 021
Barometric Pressure, in Hg 29.90 Date 7/20/90

ORIFICE READING ($\Delta H_@$) in. H2O	WET TEST METER GAS VOLUME (Vw) ft3	WET TEST METER TEMP. (Tw) °F	DRY GAS METER GAS VOLUME (Vo) ft3	TEMPERATURE DATA °F Time	$T_{D\,in}$	$T_{D\,out}$	$T_{D\,avg}$	TIME Δt min.	γ	$\Delta H_@$
1.0	5	532	923.759 918.570 5.189		80 80 81 81	80 80 80 80	540.3	9.15	.976	1.86
1.0	5	532	928.935 923.759 5.176		81 81 82 83	80 80 81 82	541.3	9.15	.980	1.86
1.0	5	532	934.143 928.935 5.208		81 82 83 83	80 81 82 82	541.6	9.22	.975	1.88
								AVERAGE	0.977	1.87
								PRE-TEST γ	1.018	1.86

$$\gamma = \frac{V_w}{V_D}\left(\frac{T_{D\,avg}+460}{T_w+460}\right)\frac{P_b}{\left(P_b+\frac{\Delta H_@}{13.6}\right)}$$

$$\Delta H_@ = 0.0317\Delta H_@\left(\frac{t}{V_w}\right)^2\frac{(T_w+460)^2}{P_b(T_D+460)}$$

Vacuum Setting, in. Hg. 6"

POST TEST CALIBRATION - TEMPERATURE SENSORS

	Ambient (°R)	% Diff.	Other (°R)	% Diff.
Reference	530	0	672	0
Stack Thermocouple ID#	530		672	
Reference	528	0	672	0
Gas Meter Inlet ID#	528		672	
Reference	528	0	672	0
Gas Meter Outlet ID#	528		672	
Reference	529	0.2	672	0.1
Condenser Outlet ID#	530		671	
Reference	530	1.3	731	1.2
Heated Oven Box ID#	537		740	

Technician: TZ Date: 7/20/90

NA = Not Applicable

Galson
Technical Services, Inc.
2116 Berkeley Way
Berkeley, CA 94704
Tel: (415) 848-0389

POST TEST CALIBRATION - DRY GAS METER

Plant Georgia Pacific Job # 89-077 - 6P
Source Boiler exhaust Meter Box ID PG 1
Barometric Pressure, in Hg 30.23 Date 11/7/90

ORIFICE READING $H_@$ in H_2O	WET TEST METER GAS VOLUME (Vw) ft3	WET TEST METER TEMP. (Tw) °F	DRY GAS METER GAS VOLUME (Vo) ft3	TEMPERATURE DATA °F Time	$T_{D\ in}$	$T_{D\ out}$	$T_{D\ avg}$	TIME Δt min.	γ	$\Delta H_@$
.5	5.0	529	935.194		84	79	541	7.80	1.020	1.98
			930.174		84	79				
			5.02		84	79				
1.5	5.0	529	990.571		82	80	541	7.91	1.010	1.98
			985.571		84	80				
			5.03		84	80				
1.5	5.0	529	995.644		83	80	541	7.84	1.015	2.00
			990.604		84	80				
			5.04		84	80				
								AVERAGE	1.010	1.99
								PRE-TEST γ	1.015	1.89

$$\gamma = \frac{V_w}{V_D}\left(\frac{T_{D\ avg}+460}{T_w+460}\right)\frac{P_b}{\left(P_b+\frac{\Delta H_@}{13.6}\right)}$$

Vacuum Setting, in. Hg. 13"

$$\Delta H_@ = 0.0317\,\Delta H_@\left(\frac{t}{V_w}\right)^2\frac{(T_w+460)^2}{P_b\,(T_D+460)}$$

POST TEST CALIBRATION - TEMPERATURE SENSORS

	Ambient (°R)	% Diff.	Other (°R)	% Diff.
Reference	530	0%	672	0%
Stack Thermocouple ID#	530		672	
Reference	528	0%	672	0%
Gas Meter Inlet ID#	528		672	
Reference	528 R	0%	672	0%
Gas Meter Outlet ID#	528°R		672	
Reference	529	0.2	672	0.1
Condenser Outlet ID#	530		671	
Reference	530	1.3	731	1.2
Heated Oven Box ID#	537		740	

Technician: D. Date: 11/7/90

NA = Not Applicable

Galson
Technical Services, Inc.
2118 Berkeley Way
Berkeley, CA 94704
Tel: (415) 848-0389

POST TEST CALIBRATION - DRY GAS METER

Plant Georgia Pacific
Source Boiler exhaust
Barometric Pressure, in Hg 30.27
Job # 59-072-6 P
Meter Box ID 007
Date 11/5/90

ORIFICE READING (Ho) in. H2O	WET TEST METER GAS VOLUME (Vw) ft3	WET TEST METER TEMP. (Tw) °F	DRY GAS METER GAS VOLUME (Vo) ft3	TEMPERATURE DATA °F Time	$T_{D\ in}$	$T_{D\ out}$	$T_{D\ avg}$	TIME Δ: min.	γ	ΔH@
2.0	5.0	530	766.652 761.699 4.98		75 77 77	70 71 71	534	6.67	1.010	1.95
2.0	5.0	530	771.6[illegible] 766.6[illegible] 5.00		77 78 79	71 72 72	535	6.70	1.015	1.98
2.0	5.0	530	776.704 771.686 5.02		75 80 80	73 73 74	536	6.72	0.970	1.98

AVERAGE	1.000	1.97
PRE-TEST γ	1.005	1.984

$$\gamma = \frac{V_w}{V_o}\left(\frac{T_{D\ avg}+460}{T_w+460}\right)\frac{P_b}{\left(P_b+\frac{\Delta H_@}{13.6}\right)}$$

$$\Delta H_@ = 0.0317\Delta H_o\left(\frac{1}{V_w}\right)^2\frac{(T_w+460)^2}{P_b(T_D+460)}$$

Vacuum Setting, in. Hg. 2"

POST TEST CALIBRATION - TEMPERATURE SENSORS

	Ambient (°R)	% Diff.	Other (°R)	% Diff.
Reference	530	0%	672	0%
Stack Thermocouple ID#	530		672	
Reference	528	0%	672	0%
Gas Meter Inlet ID#	528		672	
Reference	528	0%	672	0%
Gas Meter Outlet ID#	528		672	
Reference	528	0.2	672	0.1
Condenser Outlet ID#	529		673	
Reference	530	0	729	0.3
Heated Oven Box ID#	530		727	

Technician: [illegible] Date: 11/5/90

NA = Not Applicable

ATTACHMENT V: Field Data And Calculations

NOMENCLATURE

A_s	=	Stack Cross Sectional Area (ft^2)
A_n	=	Nozzle Cross Sectional Area (ft^2)
ACFM	=	Actual cubic feet per minute
SCFM	=	Flow rate - standard cubic feet per minute.on a dry basis
C_p	=	Pitot Calibration Factor
Δt	=	Sample Time (minutes)
DSCF	=	Dry standard cubic feet
°F, °R	=	Temperature - degrees fahrenheit, Temperature (460 + °F)
ft^2, ft^3	=	square foot, cubic foot
fpm	=	Feet per minute
γ	=	meter calibration factor
gm-mole	=	gram-mole
ΔH	=	Orifice pressure drop (inches H_2O)
Hg	=	Mercury
hr, min, sec	=	Hour, minutes, seconds
in. H_2O	=	inches of water
in. Hg	=	inches of mercury
l, ml	=	liters, milliliters
l/min	=	liters per minute
m^3	=	cubic meter
gr, gm, mg, µg, ng	=	grains, grams, milligrams, micrograms, nanograms(10^{-9})
P_b	=	Barometric Pressure (inches of Mercury)
P_m	=	Absolute meter Pressure (inches of Mercury)
ppm, ppb	=	parts per million, parts per billion
P_s	=	Stack gas absolute pressure (inches of Mercury)
P_{std}	=	Pressure, standard conditions (inches of Mercury)
$\sqrt{\Delta P}$	=	Stack gas velocity head (inches of $H_2O)^{1/2}$
SG	=	Specific gravity
θ	=	Test duration (minutes)
t_m, T_m	=	Meter temperature (°F), (°R)
t_s, T_s	=	Stack gas temperature (°F), (°R)
T_{std}	=	Temperature, standard conditions (°R)
T_o	=	Average orifice temperature during test (°F)
T_{oc}	=	Average orifice temperature during calibration.(°F)
V_{lc}	=	Volume of liquid water condensed (liters)
v_s	=	Stack gas velocity (feet per minute)
13.6	=	Specific gravity of mercury

Formaldehyde and Benzene Emission Data

Summary of Test Data: Aldehyde Emissions

	Run: #5	Run: #6	Run: #7
Sampling Data			
Duration of the Run (θ), Minutes:	45	45	45
Ambient Air Temperature, °F	60	60	60
Barometric Pressure (P_b), in. Hg	30.33	30.33	30.33
Avg Orifice Temp @ Calib Cond (T_{oc}), °F	56	56	55
Avg Orifice Temp @ Test Cond (T_o), °F	55	51	53
Avg Sampling Rate @ Calib Cond, l/min	0.87	0.83	0.87
Velocity Data			
Number of Sampling Points:	20	20	20
Pitot Calibration Factor (C_p):	0.84	0.84	0.84
Stack Diameter, Inches:	66	66	66
Stack Gas Static Pressure in Flue, In. H_2O:	-0.31	-0.29	-0.27
Stack Gas Absolute Pressure (P_s), In. Hg:	30.31	30.31	30.31
Stack Gas Velocity Head, ($\sqrt{\Delta P}$):	1.145	1.134	1.124
Stack Gas Temperature (ts), °F:	161	162	163
Stack Gas Moisture Percent: [1]	32.60	33.40	34.20
Specific Gravity of Flue Gas (SG):	0.905	0.902	0.901

1. Source of Moisture Percentage Data: Calculated based on saturated gas conditions

Sampling Data and Calculations: Aldehyde Emissions

	Run: #5	Run: #6	Run: #7
A. Stack Gas Cross Sectional Area (A_s), ft^2:	23.76	23.76	23.76
B. Stack Gas Moisture Percent: [1]	32.60	33.40	34.20
Avg Sampling Rate @ Calib Cond, l/min	0.87	0.83	0.87
Avg Sampling Rate @ Test Cond., l/min Avg Sampling Rate @ Calib Cond.*SQRT(T_o/T_{oc})	0.86	0.83	0.87
Volume Sampled @ Test Cond., l Avg Sampling Rate @ Test Cond. * Test Duration	38.9	37.3	39.1
Volume Sampled @ STD Cond, ft^3 [(Volume Sampled @ Test Cond./28.32) * (P_b/P_{std}) * (T_{std}/Avg Orifice Temp @ Test in °R)] [1]	1.429	1.378	1.443
C. Stack Gas Velocity, ft/min: [4005 * $\sqrt{\Delta P}$ + C_p * SQRT((T_s * P_{std})/(T_{std} * P_s * SG))]	4,366	4,333	4,299
D. Stack Gas Flow Rate (stack cond.), ACFM: A * C]	03,733	102,933	102,133
E. Stack Gas Flow Rate (std. cond. dry), SCFM [D * (1 - B/100) * (T_{std}/T_s) * (P_s/P_{std})]	60,186	58,950	57,713

[1] Source of Moisture Percentage Data: Calculated based on saturated gas conditions

Standard Conditions: T_{std} = 528 °R ; P_{std} = 29.92 in. Hg

$T_s = t_s + 460$; $T_m = t_m + 460$

Sampling Data and Calculations: Aldehyde Emissions

	Run: #5	Run: #6	Run: #7
Organics Quantity Collected, µg			
Acetaldehyde	8.29	14.8	3.44
Formaldehyde	11.3	37.5	8.41
Organics Concentration, mg/m^3 [(Mass/Vol Sampled STD) * (0.03531/1)]			
Acetaldehyde	0.205	0.379	0.084
Formaldehyde	0.279	0.961	0.206
Organics Concentrations, ppm [Concentration * 24.04358/M.W. of parameter]			
Acetaldehyde (MW=>44.1)	0.112	0.207	0.046
Formaldehyde (MW=>30)	0.224	0.770	0.165
Organics Concentrations (At 12% CO_2), ppm [Concentration * (12/%CO_2)]			
Acetaldehyde	0.122	0.226	0.047
Formaldehyde	0.244	0.840	0.168
Organics Emission Rate, gm/hr [Conc.* Stack Gas Flow Rate * (0.06/1000)/(0.03531/1)]			
Acetaldehyde	21.0	38.0	8.25
Formaldehyde	28.6	96.3	20.2

Gaison
Technical Services, Inc.
2116 Berkeley Way
Berkeley, CA 94704
Tel: (415) 848-0389
Fax: (415) 848-0838

Orifice and Dry Test Meters

Date 6/15/90 Wet Test Meter ID 1

Meter Box ID 001 Barometric Pressure 29.75

ORIFICE READING (ΔH_D) in. H_2O	WET TEST METER GAS VOLUME (V_W) ft^3	WET TEST METER TEMP. (T_W) °F	DRY GAS METER GAS VOLUME (V_D) ft^3	TEMPERATURE DATA °F Time	$T_{D\,in}$	$T_{D\,out}$	$T_{D\,avg}$	TIME Δt min.	γ	ΔH_a
.5	5	530	693.254 698.136 4.902		76 77 77	72 71 71	535	12.75	1.009	1.806
1	5	530	700.101 705.026 4.92		77 77	71 72	536	8.85	1.025	1.737
2	10	530	705.23 715.115 9.885		75 82	79 [illegible]	538	13.62	1.013	2.05
3	10	5	715.302 725.[illegible] 9.965		78 80 82	[illegible] 79 80	539	11.1	1.013	2.04
								Average	1.015	1.91

$$\gamma = \frac{V_W}{V_D}\left(\frac{T_{D\,avg}+460}{T_W+460}\right)\frac{P_b}{\left(P_b+\frac{\Delta H_D}{13.6}\right)}$$

Technician: [illegible]

$$\Delta H_a = 0.0317\ \Delta H_D\left(\frac{1}{V_W}\right)^2\frac{(T_W+460)^2}{P_b(T_D+460)}$$

.Stack Gas Composition and Gas Density Calculations

	Run: #5		Run: #6		Run: #7	
	% Dry Basis	Wet Basis	% Dry Basis	Wet Basis	% Dry Basis	Wet Basis
CO_2	11.0	7.41	11.0	7.33	11.8	7.76
O_2	10.0	6.74	10.3	6.86	9.4	6.19
CO	0.1	0.07	0.1	0.07	0.2	0.13
N_2	78.9	53.18	78.6	52.35	78.6	51.72
H_2O	- - -	32.60	- - -	33.40	- - -	34.20
Molecular Weight[1]	- - -	26.20	- - -	26.11	- - -	26.07
Specific Gravity of Stack Gas[2]	- - -	0.905	- - -	0.902	- - -	0.901

1. Calculated from the equation:
   Molecular Weight = $0.44*(\%CO_2) + 0.32*(\%O_2) + 0.28*(\%N_2 + \%CO) + 0.18*(\%H_2O)$
2. Calculated from the equation:
   SG = Molecular Weight of Stack Gas / Molecular Weight of Air (28.95 gm/gm-mole)

FIELD DATA – CRITICAL ORIFICE

PLANT [illegible] RUN No. 5 AMBIENT TEMP. (°F) 60

LOCATION [illegible] CONTAMINANTS [illegible] BARO. PRESS. (In. Hg) 30.33

DATE 7/18/90 OPERATOR RP/RR

CALIBRATION DATA

CALIBRATION RUN No.	BURETTE VOL. (cc)	ORIFICE TEMP. (°F)	TIME (sec)
PRE-TEST-1	200	56	13.91
2			13.62
3			13.84
Avg.			13.89

FLOW (l/min): 0.864

POST-TEST-1	200	55	13.89
2			13.85
3			13.78
Avg.			13.84

FLOW (l/min): 0.867

Average Flow (l/min)	0.866

TEST DATA

	CLOCK TIME	SAMPLING TIME (min)	FLOWMETER RDG.	ORIFICE TEMP (°F)
START @	9:00	—	1.0	56
	9:10	10	0.95	55
	9:15	15	0.95	55
	9:25	25	0.90	54
	9:30	30	0.90	54
	9:35	35	0.90	55
	9:40	40	0.85	55
STOP @	9:45	45	0.85	55
		Total 45		Avg. 55

Galson
Technical Services, Inc.
Environmental Sciences Division

COMMENTS:

FIELD DATA CRITICAL ORIFICE

PLANT [illegible] RUN No. 10 AMBIENT TEMP. (°F) 40

LOCATION [illegible] CONTAMINANTS Formal BARO. PRESS. (In. Hg) 30.30

DATE 4/7/9[illegible] OPERATOR [illegible]

Start: 10:05

CALIBRATION DATA

CALIBRATION RUN No.	BURETTE VOL. (cc)	ORIFICE TEMP. (°F)	TIME (sec)
PRE-TEST-1	200	56	14.30
2			14.52
3			14.28
Avg.			14.30

FLOW (l/min): 0.839

POST-TEST-1	200	56	14.54
2			14.62
3			14.50
Avg.			14.55

FLOW (l/min): 0.825

Stop 10:50.

Average Flow (l/min)	0.832

TEST DATA

CLOCK TIME	SAMPLING TIME (min)	FLOWMETER RDG.	ORIFICE TEMP (°F)
1005	5	10	52
10	10	10	52
15	15	10	50
20	20	10	50
25	25	10	50
30	30	10	50
35	35	10	52
40	40	10	52
45	45	10	54
1050	—	10	50
	Total 45		Avg. 51

Galson
Technical Services, Inc.
Environmental Sciences Division

COMMENTS:

FIELD DATA – CRITICAL ORIFICE

PLANT Georgia Pacific RUN No. #D7 AMBIENT TEMP. (°F) 60

LOCATION Boiler #3 CONTAMINANTS Formaldehyde BARO. PRESS. (In. Hg) 30.33

DATE 7-19-90 OPERATOR RP / RR

CALIBRATION DATA

Start: 11:11

CALIBRATION RUN No.	BURETTE VOL. (cc)	ORIFICE TEMP. (°F)	TIME (sec)
PRE-TEST-1	200	54	13.54
2			13.62
3			13.62
Avg.			13.59

FLOW (l/min): 0.883

POST-TEST-1	200	56	13.96
2			13.90
3			13.94
Avg.			13.93

FLOW (l/min): 0.861

Average Flow (l/min)	0.872

TEST DATA

CLOCK TIME	SAMPLING TIME (min)	~~FLOWMETER RDG~~ Orifice Temp (°F)	~~ORIFICE TEMP (°F)~~ Flowmeter Rdg
11:11	0	50	10
16	5	50	10
21	10	52	10
26	15	54	10
31	20	54	10
36	25	54	10
41	30	54	10
46	35	52	9
51	40	52	9
11:56	45	54	9
	Total	52.6	Avg.

Galson
Technical Services, Inc.
Environmental Sciences Division

COMMENTS:

PLANT GEORGIA PACIFIC RUN No. 5 STACK DIMENSIONS 66" DIA.

LOCATION UNIT #3 PITOT ID 1 BARO. PRESS. (in.Hg.) 30.33

DATE 7/18/90 PITOT CF 0.84 OPERATOR KCHP

START @ 9:15

TRAVERSE POINT NUMBER	STACK ΔP In. H_2O	STACK TEMP (T_s) °F
B1	0.87	163
2	1.20	162
3	1.30	161
4	1.30	161
5	1.50	161
6	1.60	161
7	1.25	162
8	1.40	162
9	1.40	162
10	1.25	162
	$\sqrt{\Delta P}$ Avg.	Avg.

STATIC PRESSURE		
Traverse Pt.	B6	A5
Pus (in. H_2O)	-0.81	-0.69
Pstatic (in. H_2O)		
ORSAT		
% CO_2		
% O_2		
% CO		
MOISTURE		
T wet (°F)		
T dry (°F)		
%		

TRAVERSE POINT NUMBER	STACK ΔP In. H_2O	STACK TEMP (T_s) °F
A1	0.73	160
2	1.05	160
3	1.30	160
4	1.40	160
5	1.40	160
6	1.60	163
7	1.50	163
8	1.50	164
9	1.40	160
10	1.50	159
	$\sqrt{\Delta P}$ Avg.	Avg. 161

STOP @ 9:50

Galson
Technical Services, Inc.
Environmental Sciences Division

COMMENTS:

CYCLONIC FLOW DETERMINATION Run #7

Plant: Georgia Pacific Stack: Project #3

7.18.90

Traverse Point No.	Velocity Head ΔP, inches H_2O	~~Degrees Deviation From Reference~~ Temp °F	Traverse Point No.	Velocity Head ΔP, inches H_2O	~~Degrees Deviation From Reference~~ Temp °F
3 1	.65	167	A 1	.85	157°
2	.92	168	2	1.10	158°
3	1.05	169	3	1.35	158
4	1.30	166	4	1.40	158
5	1.40	165	5	1.25	158°
6	1.20	166	6	1.40	159°
7	1.50	166	7	1.45	160
8	1.55	166	8	1.30	161
9	1.45	167	9	1.30	161
10	1.60	166	10	1.50	161
Traverse point 1 Wake	BG -.68		A6 Wake -.58		
					163

Average |α| = _____

SUMMARY OF TEST DATA- BENZENE EMISSIONS

PLANT: GEORGIA PACIFIC STACK: WOOD-BOILER EXHAUST

		TEST #5	TEST #6	TEST #7
A.	STACK GAS FLOW RATE, DSCFM	60,186	58,950[a]	57,713
B.	BENZENE CONCENTRATION, PPM	1.5	1.7	0.3
C.	BENZENE EMISSION RATE, GM/HR $(A*B*M^b*60)/(10^3*35.3*24.04)$	500	550	96

a Based on data collected during Tests 5 and 7.

b Molecular weight of benzene = 78.1 gm/gm-mole.

FIELD DATA – CRITICAL ORIFICE

PLANT [illegible] RUN No. 5 AMBIENT TEMP. (°F) 60

LOCATION [illegible] CONTAMINANTS Benzene BARO. PRESS. (In. Hg) 30.33

DATE 7/17/90 OPERATOR RR/RP

CALIBRATION DATA

CALIBRATION RUN No.	BURETTE VOL. (cc)	ORIFICE TEMP. (°F)	TIME (sec)
PRE-TEST-1			
2			
3			
Avg.			

FLOW (l/min):

POST-TEST-1			
2			
3			
Avg.			

FLOW (l/min):

Average Flow (l/min)	

TEST DATA

	CLOCK TIME	SAMPLING TIME (min)	FLOWMETER RDG.	ORIFICE TEMP (°F)
START @	9:00			
STOP @	9:45			
		Total		Avg.

Galson
Technical Services, Inc.
Environmental Sciences Division

COMMENTS:

FIELD DATA — CRITICAL ORIFICE

PLANT Georgia Pacific RUN No. 6 AMBIENT TEMP. (°F) 60

LOCATION Boiler #3 CONTAMINANTS Benzene BARO. PRESS. (In. Hg) 30.33

DATE 7/13/90 OPERATOR R.P/R.R

CALIBRATION DATA

CALIBRATION RUN No.	BURETTE VOL. (cc)	ORIFICE TEMP. (°F)	TIME (sec)
PRE-TEST-1			
2			
3			
Avg.			

FLOW (l/min):

POST-TEST-1			
2			
3			
Avg.			

FLOW (l/min):

Average Flow (l/min)	

TEST DATA

CLOCK TIME	SAMPLING TIME (min)	FLOWMETER RDG.	ORIFICE TEMP (°F)
1005			
1050			
	Total		Avg.

Galson
Technical Services, Inc.
Environmental Sciences Division

COMMENTS:

FIELD DATA — CRITICAL ORIFICE

PLANT Cinnamon Plastic | RUN No. #7 | AMBIENT TEMP. (°F) 60

LOCATION Pontiac IL | CONTAMINANTS Benzene | BARO. PRESS. (in. Hg) 30.33

DATE 1-15-90 | | OPERATOR RP/RP

CALIBRATION DATA

CALIBRATION RUN No.	BURETTE VOL. (cc)	ORIFICE TEMP. (°F)	TIME (sec)
PRE-TEST-1			
2			
3			
Avg.			

FLOW (l/min):

POST-TEST-1			
2			
3			
Avg.			

FLOW (l/min):

Average Flow (l/min)	

TEST DATA

CLOCK TIME	SAMPLING TIME (min)	FLOWMETER RDG.	ORIFICE TEMP (°F)
11:11			
11:56			
	Total		Avg.

Galson
Technical Services, Inc.
Environmental Sciences Division

COMMENTS:

Particulate and Metals (11) Emission Data

Source Test Report:
TAC (Georgia Pacific), Fort Bragg, CA
Galson Project#: S9-072.GP

Summary of Test Data: Particulate/Metals Emissions

	Run: #1	Run: #2	Run: #4
Number of Sampling Points:	20	20	20
Duration of the Run (θ), Minutes:	120	120	120
Sampling Nozzle Diameter, Inches:	0.213	0.213	0.213
Pitot Calibration Factor (C_p):	0.84	0.84	0.84
Meter Calibration Factor (γ):	1.004	1.004	1.004
Stack Diameter, Inches:	66	66	66
Ambient Air Temperature, °F:	65	65	70
Barometric Pressure (P_b), In. Hg:	30.37	30.37	30.31
Stack Gas Static Pressure in Flue, In. H_2O:	-0.19	-0.21	-0.22
Stack Gas Absolute Pressure (P_s), In. Hg:	30.36	30.35	30.29
Stack Gas Velocity Head, ($\sqrt{\Delta P}$):	0.947	0.877	1.242
Orifice Pressure Drop (ΔH), In. H_2O:	1.33	1.14	2.13
Volume Sampled (V_m), ft^3 (Meter Cond.):	70.39	65.47	89.43
Stack Gas Temperature (t_s), °F:	154	152	158
Impinger Outlet Temperature, °F:	67	63	67
Meter Temperature (t_m), °F:	72	69	67
Meter Vacuum, In. Hg:	3	4	12
Volume of Water Condensed (V_{lc}), ml:	552.8	511.8	779.1
Specific Gravity of Flue Gas (SG):	0.936	0.939	0.923
Flue Gas Composition:			
%CO_2	13.2	12.8	11.4
%O_2	7.9	8.2	9.9
%CO	0.0	0.1	0.0

Source Test Report:
TAC (Georgia Pacific), Fort Bragg, CA
Galson Project#: S9-072.GP

Sampling Data and Calculations: Particulate/Metals Emissions			
	Run: #1	Run: #2	Run: #4
A. Stack Gas Cross Sectional Area (A_s), ft^2:	23.76	23.76	23.76
Volume Sampled (Meter Conditions), ft^3:	70.39	65.47	89.43
Volume Sampled (Std. Conditions), ft^3: [$B * \gamma * (T_{std}/P_{std}) * ((P_b + (\Delta H/13.6))/T_m)$]	71.43	66.73	91.61
D. Volume of Liquid Water Condensed, ml:	552.8	511.8	779.1
Vapor Volume (Std. Conditions) of Water, ft^3: [$D * 0.04714$]	26.06	24.13	36.73
Stack Gas Moisture Content, %: [$(E/(E + C)) * 100$]	26.73	25.82	28.62
Stack Gas Velocity, ft/min: [$4005 * \sqrt{\Delta P} * C_p * SQRT((T_s * P_{std})/(T_{std} * P_s * SG))$]	3,524	3,255	4,677
Stack Gas Flow Rate (Stack Cond.), ACFM: [$A * G$]	83,726	77,323	111,126
Stack Gas Flow Rate (Std. Cond. dry), SCFM: [$H * (1 - F/100) * (T_{std}/T_s) * (P_s/P_{std})$]	53,513	50,245	68,581

andard Conditions: $T_{std} = 528$ °R ; $P_{std} = 29.92$ in. Hg

$= t_s + 460$; $T_m = t_m + 460$

Source Test Report:
TAC (Georgia Pacific), Fort Bragg, CA
Galson Project#: S9-072.GP

Sampling Data and Calculations: Particulate Emissions

	Run: #1	Run: #2	Run: #4
J. Particulate Quantity Collected, gm			
1. Solid Particulate	0.0939	0.0834	0.1617
K. Particulate Concentration, gr/ft^3 [J/C * (1543000/100000)]			
1. Solid Particulate	0.0203	0.0193	0.0272
L. Particulate Concentration (At 12% CO_2), gr/ft^3 [K * (12/%CO_2)]			
1. Solid Particulate	0.0184	0.0181	0.0287
M. Particulate Emission Rate, lb/hr [K * I * (132300/1000000)/(1543000/100000)]			
1. Solid Particulate	9.307	8.308	16.01

Sampling Data and Calculations: Particulate/Metals Emissions

	Run: #1	Run: #2	Run: #4
J. Metals Quantity Collected, mg			
Arsenic	0.067	0.073	0.017
Beryllium	< 0.001	< 0.001	< 0.001
Cadmium	< 0.001	< 0.001	0.002
Chromium	0.007	0.004	0.016
Copper	0.055	0.051	0.077
Lead	0.025	0.023	0.059
Manganese	0.32	0.1	0.22
Mercury	0.0015	0.0019	0.0024
Nickel	< 0.008	< 0.008	0.012
Selenium	< 0.01	< 0.01	< 0.01
Zinc	0.589	0.559	0.909

Source Test Report:
TAC (Georgia Pacific), Fort Bragg, CA
Galson Project#: S9-072.GP

Sampling Data and Calculations: Particulate/Metals Emissions

	Run: #1	Run: #2	Run: #4
K. Metals Concentration, mg/m³			
[J/C * (35.31/1)]			
Arsenic	0.033	0.039	0.007
Beryllium	< 0.0005	< 0.0005	< 0.0004
Cadmium	< 0.0005	< 0.0005	0.001
Chromium	0.003	0.002	0.006
Copper	0.027	0.027	0.030
Lead	0.012	0.012	0.023
Manganese	0.158	0.053	0.085
Mercury	0.0007	0.0010	0.0009
Nickel	< 0.004	< 0.004	0.005
Selenium	< 0.005	< 0.005	< 0.004
Zinc	0.291	0.296	0.350

ce Test Report:
(Georgia Pacific), Fort Bragg, CA
on Project#: S9-072.GP

Sampling Data and Calculations: Particulate/Metals Emissions			
	Run: #1	Run: #2	Run: #4
icentration (At 12% CO_2), mg/m³			
%CO_2)]			
	0.030	0.036	0.007
l	< 0.0004	< 0.0005	< 0.0004
	< 0.0004	< 0.0005	0.001
l	0.003	0.002	0.006
	0.025	0.025	0.031
	0.011	0.011	0.024
l	0.144	0.050	0.089
	0.0007	0.0009	0.0010
	< 0.004	< 0.004	0.005
	< 0.004	< 0.005	< 0.004
	0.265	0.277	0.369

Source Test Report:
TAC (Georgia Pacific), Fort Bragg, CA
Galson Project#: S9-072.GP

Sampling Data and Calculations: Particulate/Metals Emissions

	Run: #1	Run: #2	Run: #4
M. Metals Emission Rate, gm/hr			
[K * I * (60/1000)/(35.31/1)]			
Arsenic	3.01	3.30	0.764
Beryllium	< 0.045	< 0.045	< 0.045
Cadmium	< 0.045	< 0.045	0.090
Chromium	0.315	0.181	0.719
Copper	2.47	2.30	3.46
Lead	1.12	1.04	2.65
Manganese	14.4	4.52	9.88
Mercury	0.067	0.086	0.108
Nickel	< 0.360	< 0.361	0.539
Selenium	< 0.450	< 0.452	< 0.449
Zinc	26.2	25.3	43.8

Source Test Report:
TAC (Georgia Pacific), Fort Bragg, CA
Galson Project#: S9-072.GP

Isokinetic Variation Calculation

	Run: #1	Run: #2	Run: #4
Stack Gas Absolute Temperature (T_s), °R:	614	612	618
Volume of Liquid Water Condensed (V_{lc}), ml:	552.8	511.8	779.1
Meter Calibration Factor (γ):	1.004	1.004	1.004
Volume Sampled (Meter Cond.) (V_m), ft^3:	70.39	65.47	89.43
Meter Absolute Temperature (T_m), °R:	532	529	527
Meter Absolute Pressure (P_m), In. Hg: ($P_b + \Delta H / 13.6$)	30.47	30.45	30.47
Stack Gas Velocity (v_s), ft/min:	3,524	3,255	4,677
Stack Gas Absolute Pressure (P_s), In. Hg:	30.36	30.35	30.29
Cross-Sectional Area of Nozzle, (A_n), ft^2:	0.00025	0.00025	0.00025
Duration of the Run (θ), minutes:	120	120	120
Isokinetic Percentage (I), %: [1]	106.8	106.2	106.9

. Calculated from the Equation:

$$I = [T_s * 100 * ((K_3 * V_{lc}) + (V_m / T_m * \gamma * P_m))] / (\theta * v_s * P_s * A_n)$$

where $K_3 = 0.002669$

Stack Gas Composition and Gas Density Calculations

	Run: #1		Run: #2		Run: #4	
	% Dry Basis	Wet Basis	% Dry Basis	Wet Basis	% Dry Basis	Wet Basis
CO_2	13.2	9.67	12.8	9.49	11.4	8.14
O_2	7.9	5.79	8.2	6.08	9.9	7.07
CO	0.0	0.00	0.1	0.07	0.0	0.00
N_2	78.9	57.81	78.9	58.53	78.7	56.18
H_2O	- - -	26.73	- - -	25.82	- - -	28.62
Molecular Weight[1]	- - -	27.11	- - -	27.18	- - -	26.72
Specific Gravity of Stack Gas[2]	- - -	0.936	- - -	0.939	- - -	0.923

1. Calculated from the equation:
   Molecular Weight = $0.44*(\%CO_2) + 0.32*(\%O_2) + 0.28*(\%N_2 + \%CO) + 0.18*(\%H_2O)$
2. Calculated from the equation:
   SG = Molecular Weight of Stack Gas / Molecular Weight of Air (28.95 gm/gm-mole)

Galson Technical Services

Comments:

Plant: GEORGIA PACIFIC
Location: UNIT #3
Date: 7/12/10
Run Number: #1 MM
Operator: KR/KP
Sample Box ID: N1
Meter Box ID: 002
Probe ID:
Filter #:

Meter δ: 1.004
Meter ΔH@: 1.94
Pitot C.F.: 0.84
Assumed Moisture %: 25
Nozzle Diameter in.: 0.213
C Factor: 1.25
Ambient Temperature: 65
Barometric Pressure: 30.37
Silica Gel #:

Traverse Pt.: 1-8 / DS
Pwake: 0.50 / -0.44
Pstatic:

Water Collected:
Impingers, ml.: 520 (~~520~~ 300)
Silica Gel, gms.: 32.8 552.8

START @ 10:27 Vi = 921.403

Traverse Point Number	Sampling Time min.	Stack Temp. (Ts) °F	Stack ΔP in. H2O	Orifice ΔH in. H2O	Meter Reading (Vm) ft3	Dry Gas Meter Temp. T in °F	Dry Gas Meter Temp. T out °F	Sample Box Temp. °F	Probe Temp. °F	Impinger Outlet °F	Pump Vac. in Hg.
10	6	154	1.00	1.45	925.1	62	61	241	238	66	2
9	12	155	0.92	1.35	928.6	64	63	262	243	63	2
8	18	155	0.94	1.40	932.1	66	62	271	253	63	2
7	24	155	1.10	1.60	936.0	68	63	275	257	65	3
6	30	156	1.10	1.60	940.0	70	64	278	252	68	3
5	36	153	1.00	1.50	943.7	71	64	279	254	71	3
4	42	155	1.00	1.50	947.4	73	66	277	268	75	3
3	48	154	0.83	1.20	950.8	74	66	275	258	77	3
2	54	154	0.74	1.10	954.0	76	68	275	259	79	3
1	60	146	0.47	0.68	956.63	78	70	275	249	83	2
	STOP @	11:27									
Averages											

Galson Technical Services

SAMPLE COLLECTION DATA

Comments: POST TEST LEAK RATE = 0.016 CFM @ 7 in Hg

Plant: GEORGIA PACIFIC
Location: MILL #3
Date: 1/12/10
Run Number: #1 MM
Operator: RN/RP
Sample Box ID: NT
Meter Box ID: 0202
Probe ID:
Filter #:

Meter Ø: 1.009
Meter ΔH@: 1.941
Pitot C.F.: 0.84
Assumed Moisture %: 25
Nozzle Diameter in.: 0.213
C Factor: 1.25
Ambient Temperature: 65
Barometric Pressure: 30.37
Silica Gel #:

Static Pressure:
Traverse Pt. A4 A7
Pwake -0.41 -0.52
Pstatic

Water Collected:
Impingers, ml.
Silica Gel, gms.

START @ 11:51 Vi = 956.657

Traverse Point Number	Sampling Time min.	Stack Temp. (Ts) °F	Stack ΔP in. H2O	Orifice ΔH in. H2O	Meter Reading (Vm) ft3	Dry Gas Meter Temp. T in °F	Dry Gas Meter Temp. T out °F	Sample Box Temp. °F	Probe Temp. °F	Impinger Outlet °F	Pump Vac. in Hg.
A1	0	147	0.48	0.70	959.2	73	72	259	260	66	2
2	2	154	0.75	1.10	962.4	75	73	270	257	69	3
3	16	154	0.78	1.15	965.7	77	73	272	253	68	3
4	24	155	1.10	1.60	969.5	78	74	276	248	66	4
5	32	154	0.90	1.30	973.1	79	74	276	240	65	4
6	36	153	1.10	1.60	976.9	80	74	276	237	67	5
7	42	156	1.10	1.60	980.8	81	75	278	240	69	5
8	46	156	0.94	1.40	984.5	81	75	278	246	71	5
9	54	158	0.97	1.40	988.1	82	76	280	256	74	5
10	60	158	0.92	1.35	991.795	83	77	276	240	74	6
STOP @		12:51									
Averages		154	0.947	1.33	70.39	72					

Galson Technical Services

SAMPLE COLLECTION DATA

Comments:

Plant Eldorado / Pacific
Location Kiln 113
Date 1-12-90
Run Number #2
Operator [illegible]
Sample Box ID
Meter Box ID 002
Probe ID
Filter #

Meter Ø 1.004
Meter ΔH@ 1.94
Pitot C.F. .84
Assumed Moisture % 25
Nozzle Diameter in. .215
C Factor 1.25
Ambient Temperature 70
Barometric Pressure 30.37
Silica Gel #

Static Pressure:
Traverse Pt. A3
Pwake -.47
Pstatic

Water Collected:
Impingers, ml. 760-300 460
Silica Gel, gms. 322+196 = 518
511.8

Start 2:52 Vt = 112.826

Traverse Point Number	Sampling Time min.	Stack Temp. (Ts) °F	Stack ΔP In. H2O	Orifice ΔH In. H2O	Meter Reading (Vm) ft3	Dry Gas Meter Temp. T in °F	Dry Gas Meter Temp. T out °F	Sample Box Temp. °F	Probe Temp. °F	Impinger Outlet °F	Pump Vac. In Hg.
A1	6	147	.64	.94		67	66	226	251	59	2
2	12	155	.66	.98	006.3	67	67	231	248	62	2
3	18	153	.80	1.2	009.4	69	67	233	240	60	3
4	24	153	.83	1.25	012.7	70	67	236	233	58	3
5	30	152	.92	1.35		71	67	236	233	57	3
6	36	153	1.1	1.62	016.7	71	67	236	230	59	4
7	42	153	.82	1.20	013.5	73	68	249	249	63	4
8	48	153	.65	.96	016.4	74	69	250	253	63	4
9	54	153	.78	1.15	020.1	75	70	227	232	56	4
10	60	154	.80	1.20		75	70	227	241	56	4
	Stop	352			026.42						
Averages											

Galson Technical Services

SAMPLE COLLECTION DATA

4/2

Comments: [illegible]

Plant [illegible]
Location [illegible]
Date [illegible]
Run Number 1
Operator [illegible]
Sample Box ID
Meter Box ID 002
Probe ID
Filter #

Meter Ø 1.004
Meter ΔH@ 1.94
Pitot C.F. .84
Assumed Moisture % 25
Nozzle Diameter in. .213
C Factor 1.25
Ambient Temperature 70
Barometric Pressure 30.37
Silica Gel #

Static Pressure:
Traverse Pt. B4
Pwake .37
Pstatic

Water Collected:
Impingers, ml.
Silica Gel, gms.

4.16 Vt: 631.762

Traverse Point Number	Sampling Time min.	Stack Temp. (Ts) °F	Stack ΔP in. H2O	Orifice ΔH in. H2O	Meter Reading (Vm) ft3	Dry Gas Meter Temp. T in °F	Dry Gas Meter Temp. T out °F	Sample Box Temp. °F	Probe Temp. °F	Impinger Outlet °F	Pump Vac. in Hg.
B1	6	154	.78	1.15		65	65	230	253	65	3
2	12	152	.72	1.05	029.9	68	66	231	257	65	3
3	18	151	.78	1.15	032.9	71	67	229	253	64	4
4	24	151	.72	1.05	036.1	71	66	230	262	65	4
5	30	150	.68	1.30	039.4	71	66	229	256	69	5
6	36	150	.83	1.25	042.7	73	67	231	264	74	4
7	42	152	.79	1.15	046.1	74	68	230	267	80	5
8	48	150	.78	1.0	049.4	74	68	228	265	76	5
9	54	148	.77	1.12	052.5	74	68	231	264	76	5
10	60	146	.53	.79	055.7	75	69	231	267	76	
		5.16		UF	058.245						
Averages		152	0.876	1.14	65.47		69				

Galson Technical Services

Comments:

Plant
Location
Date
Run Number
Operator
Sample Box ID
Meter Box ID 002
Probe ID
Filter #

Meter Ø 1.004
Meter ΔH@ 1.94
Pitot C.F. 0.84
Assumed Moisture % 25
Nozzle Diameter in. .213
C Factor 1.35
Ambient Temperature 70
Barometric Pressure 30.31
Silica Gel #

Traverse Pt. C7
Pwake -0.66
Pstatic

Water Collected:
Impingers, ml. 718.0
Silica Gel, gms. 641.0

Traverse Point Number	Sampling Time min.	Stack Temp. (Ts) °F	Stack ΔP In. H2O	Orifice ΔH In. H2O	Meter Reading (Vm) ft3	Dry Gas Meter Temp. T in °F	Dry Gas Meter Temp. T out °F	Sample Box Temp. °F	Probe Temp. °F	Impinger Outlet °F	Pump Vac. In Hg.
D	[illegible]	[illegible]	1.10	1.50	072.445	60	59	250	244	[illegible]	5
	12	[illegible]	[illegible]	1.90		60	60	250	257	61	7
	16	[illegible]	[illegible]	[illegible]		[illegible]	60	252	258	62	8
	24	[illegible]	1.70	2.30		62	60	251	258	64	7
	30	[illegible]	1.10	[illegible]		63	60	251	258	61	7
	36	158	[illegible]	2.70		65	61	253	259	64	11
	42	156	1.70	2.80		63	59	252	258	64	12
	48	156	2.0	2.70		68	63	254	257	67	14
	54	155	1.70	2.30		70	64	262	257	68	13
	60	[illegible]	[illegible]	[illegible]		72	66	265	247	67	13
					[illegible]						
Averages											

7Pm

SAMPLE COLLECTION DATA

Galson Technical Services

Comments:

Plant
Location
Date 2/16/
Run Number 4 MM
Operator
Sample Box ID
Meter Box ID 002
Probe ID
Filter #

Meter θ
Meter ΔH@ 1.77
Pitot C.F.
Assumed Moisture %
Nozzle Diameter in. 1213
C Factor
Ambient Temperature 70
Barometric Pressure
Silica Gel #

Static Pressure:
Traverse Pt. A6
Pwake -0.22
Pstatic

Water Collected:
Impingers, ml.
Silica Gel, gms.

Traverse Point Number	Sampling Time min.	Stack Temp. (Ts) °F	Stack ΔP in. H2O	Orifice ΔH in. H2O	Meter Reading (Vm) ft3	Dry Gas Meter Temp. T in °F	Dry Gas Meter Temp. T out °F	Sample Box Temp. °F	Probe Temp. °F	Impinger Outlet °F	Pump Vac. in Hg.
	66		1.0	2.20	122.232	66	65	263	260	65	19
	72	157	2.0	2.70		70	67	265	270	67	19
	78	162	2.0	2.70		71	67	275	270	67	20
	81	161	1.80	2.60		67	66	253	269	66	11
	90	158	1.80	2.28		68	66	269	269	65	12
	96	162	1.80	2.50		75	67	273	267	66	15
	102	160	1.90	1.35		77	69	270	267	73	13
	108	161	1.60	2.70		77	70	271	267	73	16
	114	161	1.2	1.65		85	73	272	268	76	13
		163	.84	1.15		92	74	272	269	77	11
					166.83						
Averages		158	1.24	2.13	89.43		67				

Summary of Test Data: Condensable Particulate Emissions

	Run: #3
Number of Sampling Points:	0
Duration of the Run (θ), Minutes:	40
Sampling Nozzle Diameter, Inches:	0.189
Pitot Calibration Factor (C_p):	0.84
Meter Calibration Factor (γ):	1.004
Stack Diameter, Inches:	66
Ambient Air Temperature, °F:	65
Barometric Pressure (P_b), In. Hg:	30.37
Stack Gas Static Pressure in Flue, In. H_2O:	-0.21
Stack Gas Absolute Pressure (P_s), In. Hg:	30.35
Stack Gas Velocity Head, ($\sqrt{\Delta P}$):	0.984
Orifice Pressure Drop (ΔH), In. H_2O:	0.82
Volume Sampled (V_m), ft^3 (Meter Cond.):	18.63
Stack Gas Temperature (t_s), °F:	154
Impinger Outlet Temperature, °F:	54
Meter Temperature (t_m), °F:	62
Meter Vacuum, In. Hg:	11
Volume of Water Condensed (V_{lc}), ml:	154.2
Specific Gravity of Flue Gas (SG):	0.933
Flue Gas Composition:	
% CO_2	13.0
% O_2	7.9
% CO	0.2

Sampling Data and Calculations: Condensable Particulate Emissions

	Run: #3
A. Stack Gas Cross Sectional Area (A_s), ft^2:	23.76
B. Volume Sampled (Meter Conditions), ft^3:	18.63
C. Volume Sampled (Std. Conditions), ft^3: [$B * \gamma * (T_{std}/P_{std}) * ((P_b + (\Delta H/13.6))/T_m)$]	19.24
D. Volume of Liquid Water Condensed, ml:	154.2 [1]
E. Vapor Volume (Std. Conditions) of Water, ft^3: [$D * 0.04714$]	7.27
F. Stack Gas Moisture Content, %: [$(E/(E + C)) * 100$]	27.42 [2]
G. Stack Gas Velocity, ft/min: [$4005 * \sqrt{\Delta P} * C_p * SQRT((T_s * P_{std})/(T_{std} * P_s * SG))$]	3,672
H. Stack Gas Flow Rate (Stack Cond.), ACFM: [$A * G$]	87,230
I. Stack Gas Flow Rate (Std. Cond. dry), SCFM: [$H * (1 - F/100) * (T_{std}/T_s) * (P_s/P_{std})$]	55,241

Standard Conditions: $T_{std} = 528$ °R ; $P_{std} = 29.92$ in. Hg

$T_s = t_s + 460$; $T_m = t_m + 460$

1. Liquid volume is back-calculated assuming saturated conditions.
2. Saturation moisture content, based on stack gas temperature and pressure.

Sampling Data and Calculations: Condensable Particulate Emissions

	Run: #3
J. Particulate Quantity Collected, mg	
Condensable Particulate	14.2
K. Particulate Concentration, gr/ft^3 [J/C * (1543/100000)]	
Condensable Particulate	0.0114
L. Particulate Concentration (At 12% CO_2), gr/ft^3 [K * (12/%CO_2)]	
Condensable Particulate	0.0105
M. Particulate Emission Rate, lb/hr [K * I * (132.3/1000000)/(1543/100000)]	
Condensable Particulate	5.39

Isokinetic Variation Calculation

	Run: #3
Stack Gas Absolute Temperature (T_s), °R:	614
Volume of Liquid Water Condensed (V_{lc}), ml:	154.2
Meter Calibration Factor (γ):	1.004
Volume Sampled (Meter Cond.) (V_m), ft^3:	18.63
Meter Absolute Temperature (T_m), °R:	522
Meter Absolute Pressure (P_m), In. Hg: ($P_b + \Delta H / 13.6$)	30.43
Stack Gas Velocity (v_s), ft/min:	3,672
Stack Gas Absolute Pressure (P_s), In. Hg:	30.35
Cross-Sectional Area of Nozzle, (A_n), ft^2:	0.00019
Duration of the Run (θ), minutes:	40
Isokinetic Percentage (I), %: [1]	106.2

[1] Calculated from the Equation:

$$I = [T_s * 100 * ((K_3 * V_{lc}) + (V_m / T_m * \gamma * P_m))] / (\theta * v_s * P_s * A_n)$$

where $K_3 = 0.002669$

Stack Gas Composition and Gas Density Calculations

	Run: #3					
	% Dry Basis	Wet Basis	% Dry Basis	Wet Basis	% Dry Basis	Wet Basis
CO_2	13.0	9.44				
O_2	7.9	5.73				
CO	0.2	0.17				
N_2	78.9	57.24				
H_2O	- - -	27.42				
Molecular Weight[1]	- - -	27.00				
Specific Gravity of Stack Gas[2]	- - -	0.933				

1. Calculated from the equation:
   Molecular Weight = $0.44*(\%CO_2) + 0.32*(\%O_2) + 0.28*(\%N_2 + \%CO) + 0.18*(\%H_2O)$
2. Calculated from the equation:
   SG = Molecular Weight of Stack Gas / Molecular Weight of Air (28.95 gm/gm-mole)

Galson Technical Services

SAMPLE COLLECTION DATA 72

Comments: Condensable Particulate and Crystalline Silica

Plant Georgia Pacific
Location Kettle #3
Date 7.13.90
Run Number #3
Operator K. P/MC
Sample Box ID
Meter Box ID 002
Probe ID
Filter #

Meter δ 1.004
Meter ΔH@ 1.94
Pitot C.F. .84
Assumed Moisture % 25
Nozzle Diameter in. .188
C Factor 2.25
Ambient Temperature 55
Barometric Pressure 30.37
Silica Gel #

Static Pressure:
Traverse Pt. B4
Pwake -.42
Pstatic

Water Collected:
Impingers, ml. 2
Silica Gel, gms. 11.8

Start 8:20 . Vf = 058.689

Traverse Point Number	Sampling Time min.	Stack Temp. (Ts) °F	Stack ΔP In. H2O	Orifice ΔH In. H2O	Meter Reading (Vm) ft3	Dry Gas Meter Temp. T in °F	Dry Gas Meter Temp. T out °F	Sample Box Temp. °F	Probe Temp. °F	Impinger Outlet °F	Pump Vac. In Hg.
B1		148	.58	.47		64	63	209	258	53	6
2	1	152	.72	.68		40	60	219	254	52	14
3	2	152	.76	.64	60.4	60	60	223	253	53	12
4	3	154	.84	.705		60	60	229	246	52	14
5		154	1.1	.92	62.3	61	60	230	244	52	15
		152	1.0	.84	63.2	61	60	228	243	52	14
		154	1.1	.92	64.2	62	60	232	229	52	15
6		153	1.1	.92	65.1	63	60	230	231	54	16
7		156	1.0	.84		63	60	230	223	56	16
10		154	1.2	1.0	67.2	64	61	220	229	59	17
				VF	067.77						
Averages											

SAMPLE COLLECTION DATA

Galson Technical Services

Comments: Crystalline Silica

Plant: C-IP
Location:
Date: 7-13-90
Run Number: #3CS
Operator: K.P/M.L.
Sample Box ID:
Meter Box ID: 002
Probe ID:
Filter #:

Meter Ø: 1.01
Meter ΔH@:
Pitot C.F.: .84
Assumed Moisture %: 2.5
Nozzle Diameter In.: .199
C Factor: 2.25
Ambient Temperature: 75
Barometric Pressure:
Silica Gel #:

Static Pressure:
Traverse Pt. A-8
Pwake: .51
Pstatic:

Water Collected:
Impingers, ml.:
Silica Gel, grms.:

Start: 9:00 (067.777 = VI)

Traverse Point Number	Sampling Time min.	Stack Temp. (Ts) °F	Stack ΔP In. H2O	Orifice ΔH In. H2O	Meter Reading (Vm) ft3	Dry Gas Meter Temp. T In °F	Dry Gas Meter Temp. T out °F	Sample Box Temp. °F	Probe Temp. °F	Impinger Outlet °F	Pump Vac. In Hg.
1	2	152	.68	.58		66	61	171	194	62	5
2	4	157	1.1	.94		62	60	192	178	60	9
3	6	155	1.1	.94	69.9	63	60	208	183	60	10
4	8	155	1.2	1.0	70.9	62	64	209	192	61	12
5	10	156	1.2	1.0	71.8	64	61	205	196	63	13
	12	154	1.1	.94	072.8	64	61	208	217	63	12
	14	157	.98	.80		65	61	227	218	65	12
	16	154	.95	.79	074.9	66	61	234	217	65	10
	18	156	.85	.72	075.8	66	62	240	219	65	10
	20	154	1.0	.84		66	62	244	213	62	11
9:20				VF=	077.315						
Averages											

Particulate Emission Data (11/90)

Summary of Test Data: Particulate Emissions (11/90)

	Run: #4N
umber of Sampling Points:	20
)uration of the Run (θ), Minutes:	60
umpling Nozzle Diameter, Inches:	0.213
;tot Calibration Factor (C_p):	0.84
Meter Calibration Factor (γ):	1.008
ack Diameter, Inches:	66
mbient Air Temperature, °F:	70
arometric Pressure (P_b), In. Hg:	30.17
ack Gas Static Pressure in Flue, In. H_2O:	-0.16
tack Gas Absolute Pressure (P_s), In. Hg:	30.16
ack Gas Velocity Head, (√ΔP):	1.134
rifice Pressure Drop (ΔH), In. H_2O:	1.70
olume Sampled (V_m), ft^3 (Meter Cond.):	39.75
ack Gas Temperature (t_s), °F:	155
pinger Outlet Temperature, °F:	60
Meter Temperature (t_m), °F:	68
eter Vacuum, In. Hg:	4
olume of Water Condensed (V_{lc}), ml:	337.9
pecific Gravity of Flue Gas (SG):	0.922
lue Gas Composition:	
CO_2	10.7
O_2	9.9
CO	0.1

Sampling Data and Calculations: Particulate Emissions (11/90)

	Run: #4N
A. Stack Gas Cross Sectional Area (A_s), ft^2:	23.76
B. Volume Sampled (Meter Conditions), ft^3:	39.75
C. Volume Sampled (Std. Conditions), ft^3: [$B * \gamma * (T_{std}/P_{std}) * ((P_b + (\Delta H/13.6))/T_m)$]	40.55
D. Volume of Liquid Water Condensed, ml:	337.9
E. Vapor Volume (Std. Conditions) of Water, ft^3: [$D * 0.04714$]	15.93
F. Stack Gas Moisture Content, %: [$(E/(E + C)) * 100$]	28.20
G. Stack Gas Velocity, ft/min: [$4005 * \sqrt{\Delta P} * C_p * SQRT((T_s * P_{std})/(T_{std} * P_s * SG))$]	4,272
H. Stack Gas Flow Rate (Stack Cond.), ACFM: [$A * G$]	101,493
I. Stack Gas Flow Rate (Std. Cond. dry), SCFM: [$H * (1 - F/100) * (T_{std}/T_s) * (P_s/P_{std})$]	63,013

Standard Conditions: $T_{std} = 528$ °R ; $P_{std} = 29.92$ in. Hg

$T_s = t_s + 460$; $T_m = t_m + 460$

Sampling Data and Calculations: Particulate Emissions (11/90)

	Run: #4 N
J. Particulate Quantity Collected, gm	
1. Solid Particulate	0.0622
2. Conden. Particulate	0.002
Total Particulate	0.0642
K. Particulate Concentration, gr/ft^3 [J/C * (1543000/100000)]	
1. Solid Particulate	0.0237
2. Conden. Particulate	0.0008
Total Particulate	0.0244
L. Particulate Concentration (At 12% CO_2), gr/ft^3 [K * (12/%CO_2)]	
1. Solid Particulate	0.0265
2. Conden. Particulate	0.0009
Total Particulate	0.0274
M. Particulate Emission Rate, lb/hr [K * I * (132300/1000000)/(1543000/100000)]	
1. Solid Particulate	12.8
2. Conden. Particulate	0.41
Total Particulate	13.2

Isokinetic Variation Calculation

Run: #4N

Stack Gas Absolute Temperature (T_s), °R:	615
Volume of Liquid Water Condensed (V_{lc}), ml:	337.9
Meter Calibration Factor (γ):	1.008
Volume Sampled (Meter Cond.) (V_m), ft^3:	39.75
Meter Absolute Temperature (T_m), °R:	528
Meter Absolute Pressure (P_m), In. Hg: ($P_b + \Delta H / 13.6$)	30.30
Stack Gas Velocity (v_s), ft/min:	4,272
Stack Gas Absolute Pressure (P_s), In. Hg:	30.16
Cross-Sectional Area of Nozzle, (A_n), ft^2:	0.00025
Duration of the Run (θ), minutes:	60
Isokinetic Percentage (I), %: [1]	103.0

[1]. Calculated from the Equation:

$$I = [T_s * 100 * ((K_3 * V_{lc}) + (V_m / T_m * \gamma * P_m))] / (\theta * v_s * P_s * A_n)$$

where $K_3 = 0.002669$

Stack Gas Composition and Gas Density Calculations

	Run: #4 N					
	% Dry Basis	Wet Basis	% Dry Basis	Wet Basis	% Dry Basis	Wet Basis
CO_2	10.7	7.68				
O_2	9.9	7.11				
CO	0.1	0.04				
N_2	79.3	56.97				
H_2O	- - -	28.20				
Molecular Weight[1]	- - -	26.69				
Specific Gravity of Stack Gas[2]	- - -	0.922				

1. Calculated from the equation:
   Molecular Weight = $0.44*(\%CO_2) + 0.32*(\%O_2) + 0.28*(\%N_2 + \%CO) + 0.18*(\%H_2O)$
2. Calculated from the equation:
   SG = Molecular Weight of Stack Gas / Molecular Weight of Air (28.95 gm/gm-mole)

Galson Technical Services

Comments:

SAMPLE COLLECTION DATA

1/2

Plant GEORGIA PACIFIC
Location [illegible]
Date 11/4/90
Run Number 4N PROGRAM
Operator [illegible]
Sample Box ID N
Meter Box ID 002
Probe ID
Filter #

Meter Ø
Meter ΔH@ 1.86
Pitot C.F. 0.84
Assumed Moisture % 26-32
Nozzle Diameter in. 0.213
C Factor 1.55/1.4/1.5
Ambient Temperature 70
Barometric Pressure 30.17
Silica Gel #

Static Pressure:
Traverse Pt. B7 B2
Pwake -0.65 -0.45
Pstatic

Water Collected:
518-200 =
Impingers, ml. 318 (337)
Silica Gel, gms. 19.9

START 1:50 Vi = 705.360

Traverse Point Number	Sampling Time min.	Stack Temp. (Ts) °F	Stack ΔP In. H2O	Orifice ΔH In. H2O	Meter Reading (Vm) ft3	Dry Gas Meter Temp. T In °F	Dry Gas Meter Temp. T out °F	Sample Box Temp. °F	Probe Temp. °F	Impinger Outlet °F	Pump Vac. In Hg.
B10	3	156	1.50	2.00	707.5	66	66	233	244	63	3
9	6	155	1.40	1.85	709.6	67	67	240	245	60	3
8	9	156	1.40	1.85	711.7	68	67	242	246	59	3
7	12	155	1.40	1.85	713.7	69	67	251	244	60	4
6	15	156	1.50	2.00	715.9	71	67	254	245	62	4
5	18	156	1.30	1.70		72	68	254	250	64	4
4	21	156	1.30	1.70	719.9	72	67	253	248	63	4
* 3	24	158	1.30	1.60	721.8	72	67	251	249	62	4
2	27	155	1.20	1.60	723.7	72	67	254	248	62	4
1	30	154	0.82	1.10	725.369	72	67	254		61	3
END	2:20										
Averages											

Galson Technical Services

SAMPLE COLLECTION DATA

2/2

Comments: Post test leak rate 0.002 CFM @ 8 in Hg!

Plant: GEORGIA-PACIFIC
Location: UNIT #3 EXHAUST
Date: 11/4/90
Run Number: # 4 NPAT
Operator: MB
Sample Box ID: N7
Meter Box ID: 202
Probe ID:
Filter #:

Meter Ø:
Meter ΔH@: 1.88
Pitot C.F.: 0.84
Assumed Moisture %: 26-32
Nozzle Diameter in.: 0.213
C Factor: 1.5/1.9/1.5
Ambient Temperature: 70
Barometric Pressure: 30.17
Silica Gel #:

Static Pressure:
Traverse Pt. A3 A7
Pwake -0.50 -0.56
Pstatic

Water Collected:
Impingers, ml.
Silica Gel, gms.

Vi = 725.369

Traverse Point Number	Sampling Time min.	Stack Temp. (Ts) °F	Stack ΔP In. H2O	Orifice ΔH In. H2O	Meter Reading (Vm) ft3	Dry Gas Meter Temp. T in °F	Dry Gas Meter Temp. T out °F	Sample Box Temp. °F	Probe Temp. °F	Impinger Outlet °F	Pump Vac. In Hg.
A1	3	154	1.0	1.30	727.0	68	67	251	248	59	3
2	6	155	1.30	1.70	729.0	69	67	249	249	58	4
3	9	156	1.40	1.85	731.1	69	66	249	248	57	4
4	12	156	1.30	1.70	733.2	69	66	247	247	58	5
5	15	154	1.20	1.60	735.1	70	66	249	248	59	5
6	18	156	1.40	1.85	737.2	70	66	250	249	60	5
7	21	154	1.40	1.85	739.2	71	66	248	246	59	5
8	24	156	1.30	1.70	741.2	71	66	252	249	60	5
9	27	155	1.20	1.60	743.2	71	66	250	248	61	5
10	30	156	1.20	1.60	745.111	70	66	250	247	61	5
	2:35										
Averages											

Hexavalent Chromium Emission Data

Summary of Test Data: Hexavalent and Total Chromium Emissions

	Run: #1	Run: #2	Run: #3
Number of Sampling Points:	20	20	20
Duration of the Run (θ), Minutes:	180	180	180
ampling Nozzle Diameter, Inches:	0.213	0.213	0.213
Pitot Calibration Factor (C_p):	0.84	0.84	0.84
Meter Calibration Factor (γ):	1.008	1.008	1.008
tack Diameter, Inches:	66	66	66
Ambient Air Temperature, °F:	70	70	70
Barometric Pressure (P_b), In. Hg:	30.17	30.17	30.17
tack Gas Static Pressure in Flue, In. H_2O:	-0.07	-0.07	-0.19
Stack Gas Absolute Pressure (P_s), In. Hg:	30.16	30.16	30.16
tack Gas Velocity Head, ($\sqrt{\Delta P}$):	1.196	1.218	1.212
Orifice Pressure Drop (ΔH), In. H_2O:	1.89	1.92	1.89
Volume Sampled (V_m), ft^3 (Meter Cond.):	127.53	126.31	125.94
tack Gas Temperature (t_s), °F:	155	157	157
npinger Outlet Temperature, °F:	68	62	70
Meter Temperature (t_m), °F:	74	71	72
leter Vacuum, In. Hg:	5	6	6
Volume of Water Condensed (V_{lc}), ml:	960.5	1,056.5	1,122.6
Specific Gravity of Flue Gas (SG):	0.933	0.924	0.916
Flue Gas Composition:			
$\%CO_2$	11.1	11.1	10.2
$\%O_2$	9.9	9.4	10.2
%CO	0.1	0.1	0.1

Sampling Data and Calculations: Hexavalent and Total Chromium Emissions

	Run: #1	Run: #2	Run: #3
A. Stack Gas Cross Sectional Area (A_s), ft^2:	23.76	23.76	23.76
B. Volume Sampled (Meter Conditions), ft^3:	127.53	126.31	125.94
C. Volume Sampled (Std. Conditions), ft^3: [$B * \gamma * (T_{std}/P_{std}) * ((P_b + (\Delta H/13.6))/T_m)$]	128.88	128.35	127.69
D. Volume of Liquid Water Condensed, ml:	960.5	1,056.5	1,122.6
E. Vapor Volume (Std. Conditions) of Water, ft^3: [D * 0.04714]	45.28	49.80	52.92
F. Stack Gas Moisture Content, %: [(E/(E + C)) * 100]	26.00	27.96	29.30
G. Stack Gas Velocity, ft/min: [$4005 \bullet \sqrt{\Delta P} * C_p * SQRT((T_s \bullet P_{std})/(T_{std} * P_s \bullet SG))$]	4,481	4,586	4,586
H. Stack Gas Flow Rate (Stack Cond.), ACFM: [A * G]	106,459	108,963	108,957
I. Stack Gas Flow Rate (Std. Cond. dry), SCFM: [$H * (1 - F/100) * (T_{std}/T_s) * (P_s/P_{std})$]	68,145	67,750	66,489

Standard Conditions: $T_{std} = 528$ °R ; $P_{std} = 29.92$ in. Hg

$T_s = t_s + 460$; $T_m = t_m + 460$

Sampling Data and Calculations: Hexavalent and Total Chromium Emissions

	Run: #1	Run: #2	Run: #3
J. Metals Quantity Collected, µg			
Chromium	27	15	3
Hexavalent Chromium	< 30	< 30	< 30
K. Metals Concentration, mg/m^3 [J/C • (0.03531/1)]			
Chromium	0.0074	0.0041	0.0008
Hexavalent Chromium	< 0.0082	< 0.0083	< 0.0083
L. Metals Concentration (At 12% CO_2), mg/m^3 [K * (12/%CO_2)]			
Chromium	0.0080	0.0045	0.0010
Hexavalent Chromium	< 0.0089	< 0.0089	< 0.0098
M. Metals Emission Rate, gm/hr [K * I * (0.06/1000)/(0.03531/1)]			
Chromium	0.86	0.48	0.09
Hexavalent Chromium	< 0.95	< 0.95	< 0.94

Source Test Report
(TAC) GEORGIA PACIFIC
Galson Project #: S9-072.GP

Date Printed: 1/17/91

Sampling Data and Calculations: Hexavalent and Total Chromium Emissions

	Run #1	Run #2	Run #3
N. Equivalent Particulate Quantity Collected, gm (See Note (a) below)	0.205	0.204	0.187
O. Metal to Particulate Ratio, ug/gm [J/N]			
Total Chromium	132	74	16
Hexavalent Chromium	<146	<147	<161

Note (a): Based on: (i) the average particulate grain loading observed during the multiple metals testing (corrected to 12% CO_2); (ii) the hexavalent chromium sample volume; and (iii) the average CO_2 concentration observed during the hexavalent chromium test.

Isokinetic Variation Calculation

	Run: #1	Run: #2	Run: #3
Stack Gas Absolute Temperature (T_s), °R:	615	617	617
Volume of Liquid Water Condensed (V_{lc}), ml:	960.5	1,056.5	1,122.6
Meter Calibration Factor (γ):	1.008	1.008	1.008
Volume Sampled (Meter Cond.) (V_m), ft^3:	127.53	126.31	125.94
Meter Absolute Temperature (T_m), °R:	534	531	532
Meter Absolute Pressure (P_m), In. Hg: ($P_b + \Delta H / 13.6$)	30.31	30.31	30.31
Stack Gas Velocity (v_s), ft/min:	4,481	4,586	4,586
Stack Gas Absolute Pressure (P_s), In. Hg:	30.16	30.16	30.16
Cross-Sectional Area of Nozzle, (A_n), ft^2:	0.00025	0.00025	0.00025
Duration of the Run (θ), minutes:	180	180	180
Isokinetic Percentage (I), %: [1]	100.9	101.0	102.4

1. Calculated from the Equation:

$$I = [T_s * 100 * ((K_3 * V_{lc}) + (V_m / T_m \bullet \gamma * P_m))] / (\theta * v_s * P_s * A_n)$$

where $K_3 = 0.002669$

Stack Gas Composition and Gas Density Calculations

	Run: #1		Run: #2		Run: #3	
	% Dry Basis	Wet Basis	% Dry Basis	Wet Basis	% Dry Basis	Wet Basis
CO_2	11.1	8.21	11.1	8.00	10.2	7.21
O_2	9.9	7.33	9.4	6.77	10.2	7.21
CO	0.1	0.07	0.1	0.07	0.1	0.07
N_2	78.9	58.39	79.4	57.20	79.5	56.21
H_2O	- - -	26.00	- - -	27.96	- - -	29.30
Molecular Weight[1]	- - -	27.01	- - -	26.75	- - -	26.51
Specific Gravity of Stack Gas[2]	- - -	0.933	- - -	0.924	- - -	0.916

1. Calculated from the equation:
   Molecular Weight = $0.44*(\%CO_2) + 0.32*(\%O_2) + 0.28*(\%N_2 + \%CO) + 0.18*(\%H_2O)$
2. Calculated from the equation:
   SG = Molecular Weight of Stack Gas / Molecular Weight of Air (28.95 gm/gm-mole)

SAMPLE COLLECTION DATA

1/2

Galson Technical Services

Comments: FILTER CHANGED AFTER 1ST [illegible] ALL [illegible]

Plant: GEORGIA PACIFIC
Location: UNIT #3 EXHAUST
Date: 11/3/90
Run Number: #1 HEX Cr
Operator: KR
Sample Box ID: NT
Meter Box ID: DD2
Probe ID:
Filter #:

Meter Δ:
Meter ΔH@: 1.88
Pitot C.F.: 0.84
Assumed Moisture %: 29
Nozzle Diameter in.: 0.213
C Factor: 1.40/1.5*
Ambient Temperature: 70
Barometric Pressure: 30.17
Silica Gel #:

Static Pressure:
Traverse Pt.: A3 A7
Pwake: -0.50 -0.46
Pstatic:

Water Collected:
1054-200
Impingers, ml.: 854
Silica Gel, gms.: 106.5

960.5

START @ 09:58 Vi = 320.881

Traverse Point Number	Sampling Time min.	Stack Temp. (Ts) °F	Stack ΔP in. H2O	Orifice ΔH in. H2O	Meter Reading (Vm) ft3	Dry Gas Meter Temp. T in °F	Dry Gas Meter Temp. T out °F	Sample Box Temp. °F	Probe Temp. °F	Impinger Outlet °F	Pump Vac. in Hg.
A 1	9	155	1.20	1.60	326.7	69	67	247	240	67	2
2	18	156	1.50	2.00	333.3	73	69	251	243	67	3
3	27	156	1.50	2.00	339.8	79	72	253	240	70	3
4	36	157	1.70	2.30	346.8	83	74	251	242	72	5
5	45	154	1.60	2.10	353.6	81	75	248	258	70	6
6	54	156	1.70	2.30		84	77	251	260	74	10
* 7	63	157	1.60	2.00	367.5	86	80	247	254	71	6
* 8	72	157	1.70	2.10		84	79	245	255	65	6
9	81	155	1.60	2.10	381.1	79	77	243	252	62	8
10	90	153	1.70	2.25	388.282	79	76	245	250	68	11
STOP @	11:29										
Averages											

Galson Technical Services

SAMPLE COLLECTION DATA

2/2

Comments: Post test leak rate = 0.006 CFM @ 16 in Hg

Plant: GEORGIA PACIFIC
Location: UNIT #3 EXHAUST
Date: 11/3/99
Run Number: #1 Hot Cr
Operator: RR
Sample Box ID: NT
Meter Box ID: 002
Probe ID:
Filter #:

Meter Ø:
Meter ΔH@: 1.88
Pitot C.F.: 0.84
Assumed Moisture %: 29
Nozzle Diameter in: 0.213
C Factor: 1.40/1.5*
Ambient Temperature: 70
Barometric Pressure:
Silica Gel #:

Static Pressure:
Traverse Pt. B6
Pwake -0.47
Pstatic

Water Collected:
Impingers, ml.
Silica Gel, gms.

START @ 12:04 Vi = 367.435

Traverse Point Number	Sampling Time min.	Stack Temp. (Ts) °F	Stack ΔP in. H2O	Orifice ΔH in. H2O	Meter Reading (Vm) ft3	Dry Gas Meter Temp. T in °F	Dry Gas Meter Temp. T out °F	Sample Box Temp. °F	Probe Temp. °F	Impinger Outlet °F	Pump Vac. in Hg.
B1	9	154	0.95	1.25	394.6	69	69	250	255	66	3
2	18	154	1.30	1.70	400.7	72	69	246	256	68	3
3	27	155	1.40	1.85	407.1	71	69	246	253	62	4
X1	36	158	1.50	1.85	413.4	72	68	247	253	63	4
5	45	155	1.40	1.85	419.7	73	66	245	250	65	4
6	54	156	1.20	1.60		74	66	252	244	72	4
7	63	155	1.20	1.60	431.3	73	66	246	244	69	4
8	72	155	1.30	1.70	437.3	73	67	250	247	71	4
9	81	156	1.90	2.50	444.5	72	67	249	245	71	4
10	90	154	0.92	1.20	449.568	74	68	250	252	74	9
STOP @	1:34										
Averages											

Galson Technical Services

SAMPLE COLLECTION DATA 1/2

Comments: POWER LOST AT 1.5 MINUTES INTO 1ST TRAVERSE

Plant: GEORGIA PACIFIC
Location: JHC #3 EVAPS
Date: 1/2/90
Run Number: #2 Cr
Operator: [illegible]
Sample Box ID: NT
Meter Box ID: 002
Probe ID:
Filter #:

Meter Ø:
Meter ΔH@: 1.88
Pitot C.F.: 0.84
Assumed Moisture %: 28/33
Nozzle Diameter in.: 0.212
C Factor: 1.40/1.60*
Ambient Temperature: 70
Barometric Pressure: 30.17
Silica Gel #:

Static Pressure:
Traverse Pt.: B4
Pwake: ~0.41
Pstatic:

Water Collected:
Impingers, ml.: 1097-200 897
Silica Gel, gms.: 159.5

1056

Start @ 3:38

Vi = 452.615

Traverse Point Number	Sampling Time min.	Stack Temp. (Ts) °F	Stack ΔP in. H2O	Orifice ΔH in. H2O	Meter Reading (Vm) ft3	Dry Gas Meter Temp. T in °F	Dry Gas Meter Temp. T out °F	Sample Box Temp. °F	Probe Temp. °F	Impinger Outlet °F	Pump Vac. in Hg.
B1	9	157	1.20	1.60		67	68	253	253	63	2
2	18	156	1.20	1.60	464.2	69	68	255	251	63	2
3	27	157	1.50	2.00		71	68	254	253	64	3
4	36	155	1.40	1.85	477.0	74	69	257	251	64	3
5	45	159	1.60	1.85		76	70	256	253	65	3
6	54	158	1.20	1.40		78	71	250	256	67	3
7	63	157	1.20	1.40	494.4	76	71	255	248	64	3
8	72	156	1.40	1.85		78	72	253	240	63	3
9	81	157	1.60	2.10	507.3	80	73	254	244	63	3
10	90	157	1.80	2.40	514.155	80	72	254	246	63	3
Stop	5:42										
Averages											

SAMPLE COLLECTION DATA 2/2

Galson Technical Services

Comments: LEAK 0.00 .17 in Hg!

Plant: [illegible]
Location: [illegible]
Date: [illegible]
Run Number: [illegible]
Operator: [illegible]
Sample Box ID: [illegible]
Meter Box ID: 002
Probe ID:
Filter #:

Meter Ø:
Meter ΔH@: 1.86
Pitot C.F.: [illegible]
Assumed Moisture %: [illegible]
Nozzle Diameter in.: [illegible]
C Factor: 1.50
Ambient Temperature: [illegible]
Barometric Pressure: 30.17
Silica Gel #:

Static Pressure:
Traverse Pt. A8
Pwake -0.57
Pstatic

Water Collected:
Impingers, ml.
Silica Gel, gms.

START @ [illegible] 11.55

Traverse Point Number	Sampling Time min.	Stack Temp. (Ts) °F	Stack ΔP In. H2O	Orifice -ΔH In. H2O	Meter Reading (Vm) ft3	Dry Gas Meter Temp. T in °F	Dry Gas Meter Temp. T out °F	Sample Box Temp. °F	Probe Temp. °F	Impinger Outlet °F	Pump Vac. In Hg.
10	1	156	1.70	2.25		62	62	249	230	58	4
9	1	155	2.00	2.60	528.2	65	63	240	235	60	6
8	1	156	1.60	2.10	19	69	63	241	243	61	8
7	1	156	1.60	2.10	541.4	70	64	239	250	63	8
6	1	156	1.60	2.10		71	65	240	248	61	9
5	1	160	1.60	2.00	554.4	74	67	241	247	62	10
4	1	159	1.50	1.85	560.6	75	68	240	245	61	11
3	1	157	1.40	1.70	566.7	77	69	241	245	63	12
2	1	156	1.50	2.00	573.1	75	68	238	246	60	13
1	1	156	1.20	1.60	579.005	77	70	241	244	60	14
	@ 1:45										
Averages											

Galson Technical Services

SAMPLE COLLECTION DATA Y2

Comments:

Plant: GEORGIA - PACIFIC
Location: [illegible]
Date: 11/9/90
Run Number: 3 [illegible]
Operator: RP
Sample Box ID: 11
Meter Box ID: 002
Probe ID:
Filter #:

Meter θ:
Meter ΔH@: 1.88
Pitot C.F.: 0.84
Assumed Moisture %: 26-32%
Nozzle Diameter in.: 0.213
C Factor: 1.35/1.40/1.50
Ambient Temperature: 70
Barometric Pressure: 30.17
Silica Gel #:

Static Pressure:
Traverse Pt. B6
Pwake -0.60
Pstatic

Water Collected: 1251-200
Impingers, ml. 1051
Silica Gel, gms. 71.6

112

Start 9:25 Vi = 579.196

Traverse Point Number	Sampling Time min.	Stack Temp. (Ts) °F	Stack ΔP in. H2O	Orifice ΔH in. H2O	Meter Reading (Vm) ft3	Dry Gas Meter Temp. T in °F	Dry Gas Meter Temp. T out °F	Sample Box Temp. °F	Probe Temp. °F	Impinger Outlet °F	Pump Vac. in Hg
B1	7	151	1.30	1.80	585.9	75	68	242	246	67	3
2	18	156	1.20	1.60		71	68	245	245	60	3
3	27	156	1.40	1.85		71	70	247	248	68	3
4	36	155	1.40	1.85		71	68	245	244	68	3
5	45	154	1.40	1.85	609.9	72	68	246	245	67	3
6	54	156	1.50	2.00	616.3	71	65	247	245	68	3
7	63	154	1.50	2.00	622.7	72	65	247	245	68	3
8	72	156	1.60	2.10	629.4	75	66	249	246	71	4
9	81	158	1.70	2.10	636.0	76	67	249	243	74	4
10	90	157	1.70	2.10	642.601	76	69	248	245	75	5
Stop 10:55											
Averages											

Galson Technical Services

SAMPLE COLLECTION DATA 2/2

Comments: [illegible]
0.014 CFM @ 18 in Hg

Plant: GEORGIA PACIFIC
Location: [illegible]
Date: 11/[illegible]/90
Run Number: [illegible]
Operator: GK
Sample Box ID: N1
Meter Box ID: 022
Probe ID: [illegible]
Filter #: [illegible]

Meter Ø: [illegible]
Meter ΔH@: 1.88
Pitot C.F.: 0.84
Assumed Moisture %: 26-32%
Nozzle Diameter in.: 0.213
C Factor: 1.35/1.90/1.50*
Ambient Temperature: 70
Barometric Pressure: 30.19
Silica Gel #: [illegible]

Static Pressure:
Traverse Pt. A7
Pwake -0.65
Pstatic

Water Collected:
Impingers, ml.
Silica Gel, gms.

[illegible] 11.5 Vi: 642.676

Traverse Point Number	Sampling Time min.	Stack Temp. (Ts) °F	Stack ΔP in. H2O	Orifice ΔH in. H2O	Meter Reading (Vm) ft3	Dry Gas Meter Temp. T in °F	Dry Gas Meter Temp. T out °F	Sample Box Temp. °F	Probe Temp. °F	Impinger Outlet °F	Pump Vac. in Hg.
A10	9	158	1.60	2.00	649.0	68	67	247	244	67	6
9	18	158	1.70	2.10	655.7	70	68	250	249	70	7
8	27	160	1.70	2.10	662.3	75	69	251	252	74	8
7	36	159	1.60	2.00	668.8	80	72	250	254	75	9
6	45	159	1.60	2.00	675.4	79	72	249	253	76	10
5	54	158	1.50	1.85	681.7	80	73	247	250	76	10
4	63	158	1.50	1.85	688.1	80	74	247	251	72	10
3	72	157	1.30	1.60	693.8	77	73	244	248	69	9
A2	81	156	1.30	1.70	699.8	75	72	246	239	67	11
1	90	155	1.00	1.30	705.166	74	72	246	238	69	11
Stop	12:15										
Averages											

PAH Emission Data

Summary of Test Data: PAH Emissions

	Run: #1	Run: #2	Run: #3
umber of Sampling Points:	20	20	20
ration of the Run (θ), Minutes:	180	180	180
mpling Nozzle Diameter, Inches:	0.213	0.213	0.213
itot Calibration Factor (C_p):	0.84	0.84	0.84
ter Calibration Factor (γ):	1.01	1.01	1.01
ack Diameter, Inches:	66	66	66
mbient Air Temperature, °F:	65	65	65
rometric Pressure (P_b), In. Hg:	30.17	30.17	30.17
ack Gas Static Pressure in Flue, In. H_2O:	-0.44	-0.36	-0.19
ack Gas Absolute Pressure (P_s), In. Hg:	30.14	30.14	30.16
ck Gas Velocity Head, ($\sqrt{\Delta P}$):	1.104	1.198	1.230
rifice Pressure Drop (ΔH), In. H_2O:	1.48	1.77	1.82
olume Sampled (V_m), ft^3 (Meter Cond.):	110.22	121.03	123.40
ck Gas Temperature (t_s), °F:	158	159	158
pinger Outlet Temperature, °F:	70	69	68
eter Temperature (t_m), °F:	77	72	78
ter Vacuum, In. Hg:	10	14	15
olume of Water Condensed (V_{lc}), ml:	946.9	1,094.3	1,108.4
ecific Gravity of Flue Gas (SG):	0.921	0.917	0.914
D-2 Outlet Temperature, °F:	66	63	64
ue Gas Composition:			
CO_2	11.1	11.1	10.2
O_2	9.9	9.4	10.2
CO	0.1	0.1	0.1

Sampling Data and Calculations: PAH Emissions

	Run: #1	Run: #2	Run: #3
. Stack Gas Cross Sectional Area (A_s), ft^2:	23.76	23.76	23.76
. Volume Sampled (Meter Conditions), ft^3:	110.22	121.03	123.40
. Volume Sampled (Std. Conditions), ft^3: [$B * \gamma * (T_{std}/P_{std}) \bullet ((P_b + (\Delta H/13.6))/T_m)$]	110.82	122.82	123.90
. Volume of Liquid Water Condensed, ml:	946.9	1,094.3	1,108.4
. Vapor Volume (Std. Conditions) of Water, ft^3: [$D * 0.04714$]	44.64	51.59	52.25
. Stack Gas Moisture Content, %: [$(E/(E + C)) * 100$]	28.71	29.58	29.66
. Stack Gas Velocity, ft/min: [$4005 * \sqrt{\Delta P} * C_p * SQRT((T_s \bullet P_{std})/(T_{std} * P_s \bullet SG))$]	4,172	4,538	4,663
. Stack Gas Flow Rate (Stack Cond.), ACFM: [$A * G$]	99,130	107,824	110,775
Stack Gas Flow Rate (Std. Cond. dry), SCFM: [$H * (1 - F/100) * (T_{std}/T_s) * (P_s/P_{std})$]	60,810	65,289	67,084

andard Conditions: $T_{std} = 528$ °R ; $P_{std} = 29.92$ in. Hg

$= t_s + 460$; $T_m = t_m + 460$

Sampling Data and Calculations: PAH Emissions

	Run: #1	Run: #2	Run: #3
J. PAH Quantity Collected, µg			
Acenaphthene	12	2.1	2.7
Acenaphthylene	160	23	26
Anthracene	11	2.3	2.4
Benzo(a)anthracene	< 10	1.2	< 1
Benzo(a)pyrene	< 10	< 1	< 1
Benzo(b)fluoranthene	< 10	< 1	2.2
Benzo(g,h,i)perylene	< 10	< 1	< 1
Benzo(k)fluoranthene	< 10	< 1	< 1
Chrysene	< 10	< 1	< 1
Dibenzo(a,h)anthracene	< 10	< 1	< 1
Fluoranthene	59	20	16
Fluorene	36	7.1	6.1
Indeno(1,2,3-cd)pyrene	< 10	< 1	< 1
Naphthalene	1159	< 41	389
Phenanthrene	180	46	36
Pyrene	38	13	10

Sampling Data and Calculations: PAH Emissions

	Run: #1	Run: #2	Run: #3
K. PAH Concentration, $\mu g/m^3$			
[J/C * (35.31/1)]			
Acenaphthene	3.82	0.604	0.769
Acenaphthylene	51.0	6.61	7.41
Anthracene	3.50	0.661	0.684
Benzo(a)anthracene	< 3.19	0.345	< 0.285
Benzo(a)pyrene	< 3.19	< 0.287	< 0.285
Benzo(b)fluoranthene	< 3.19	< 0.287	0.627
Benzo(g,h,i)perylene	< 3.19	< 0.287	< 0.285
Benzo(k)fluoranthene	< 3.19	< 0.287	< 0.285
Chrysene	< 3.19	< 0.287	< 0.285
Dibenzo(a,h)anthracene	< 3.19	< 0.287	< 0.285
Fluoranthene	18.8	5.75	4.56
Fluorene	11.5	2.04	1.74
Indeno(1,2,3-cd)pyrene	< 3.19	< 0.287	< 0.285
Naphthalene	369	< 11.8	111
Phenanthrene	57.4	13.2	10.3
Pyrene	12.1	3.74	2.85

Sampling Data and Calculations: PAH Emissions

	Run: #1	Run: #2	Run: #3
L. PAH Concentration (At 12% CO_2), $\mu g/m^3$			
[K * (12/%CO_2)]			
Acenaphthene	4.13	0.653	0.905
Acenaphthylene	55.1	7.15	8.72
Anthracene	3.79	0.715	0.805
Benzo(a)anthracene	< 3.44	0.373	< 0.335
Benzo(a)pyrene	< 3.44	< 0.311	< 0.335
Benzo(b)fluoranthene	< 3.44	< 0.311	0.738
Benzo(g,h,i)perylene	< 3.44	< 0.311	< 0.335
Benzo(k)fluoranthene	< 3.44	< 0.311	< 0.335
Chrysene	< 3.44	< 0.311	< 0.335
Dibenzo(a,h)anthracene	< 3.44	< 0.311	< 0.335
Fluoranthene	20.3	6.22	5.36
Fluorene	12.4	2.21	2.05
Indeno(1,2,3-cd)pyrene	< 3.44	< 0.311	< 0.335
Naphthalene	399	< 12.7	130
Phenanthrene	62.0	14.3	12.1
Pyrene	13.1	4.04	3.35

Sampling Data and Calculations: PAH Emissions

	Run: #1	Run: #2	Run: #3
M. PAH Emission Rate, mg/hr			
[K * I * (0.06/1)/(35.31/1)]			
Acenaphthene	395	67.0	87.7
Acenaphthylene	5270	734	845
Anthracene	362	73.4	78.0
Benzo(a)anthracene	< 329	38.3	< 32.5
Benzo(a)pyrene	< 329	< 31.9	< 32.5
Benzo(b)fluoranthene	< 329	< 31.9	71.5
Benzo(g,h,i)perylene	< 329	< 31.9	< 32.5
Benzo(k)fluoranthene	< 329	< 31.9	< 32.5
Chrysene	< 329	< 31.9	< 32.5
Dibenzo(a,h)anthracene	< 329	< 31.9	< 32.5
Fluoranthene	1940	638	520
Fluorene	1190	226	198
Indeno(1,2,3-cd)pyrene	< 329	< 31.9	< 32.5
Naphthalene	38200	< 1310	12600
Phenanthrene	5930	1470	1170
Pyrene	1250	415	325

Isokinetic Variation Calculation

	Run: #1	Run: #2	Run: #3
Stack Gas Absolute Temperature (T_s), °R:	618	619	618
Volume of Liquid Water Condensed (V_{lc}), ml:	946.9	1,094.3	1,108.4
Meter Calibration Factor (γ):	1.01	1.01	1.01
Volume Sampled (Meter Cond.) (V_m), ft^3:	110.22	121.03	123.40
Meter Absolute Temperature (T_m), °R:	537	532	538
Meter Absolute Pressure (P_m), In. Hg: ($P_b + \Delta H / 13.6$)	30.28	30.30	30.30
Stack Gas Velocity (v_s), ft/min:	4,172	4,538	4,663
Stack Gas Absolute Pressure (P_s), In. Hg:	30.14	30.14	30.16
Cross-Sectional Area of Nozzle, (A_n), ft^2:	0.00025	0.00025	0.00025
Duration of the Run (θ), minutes:	180	180	180
Isokinetic Percentage (I), %: [1]	97.2	100.3	98.5

1. Calculated from the Equation:

$$I = [T_s * 100 * ((K_3 * V_{lc}) + (V_m / T_m * \gamma * P_m))] / (\theta * v_s * P_s * A_n)$$

where $K_3 = 0.002669$

Stack Gas Composition and Gas Density Calculations

	Run: #1		Run: #2		Run: #3	
	% Dry Basis	Wet Basis	% Dry Basis	Wet Basis	% Dry Basis	Wet Basis
CO_2	11.1	7.91	11.1	7.82	10.2	7.17
O_2	9.9	7.06	9.4	6.62	10.2	7.17
CO	0.1	0.07	0.1	0.06	0.1	0.04
N_2	78.9	56.25	79.4	55.92	79.5	55.95
H_2O	---	28.71	---	29.58	---	29.66
Molecular Weight[1]	---	26.68	---	26.56	---	26.47
Specific Gravity of Stack Gas[2]	---	0.921	---	0.917	---	0.914

1. Calculated from the equation:
   Molecular Weight = $0.44*(\%CO_2) + 0.32*(\%O_2) + 0.28*(\%N_2 + \%CO) + 0.18*(\%H_2O)$
2. Calculated from the equation:
   SG = Molecular Weight of Stack Gas / Molecular Weight of Air (28.95 gm/gm-mole)

Galson Technical Services

Comments:

Plant: Georgia-Pacific
Location: Boiler exhaust
Date: 11/5/16
Run Number: #1 [illegible]
Operator: D
Sample Box ID:
Meter Box ID: 001
Probe ID:
Filter #:

Meter Ø: 1.01
Meter ΔH@: 1.79
Pitot C.F.:
Assumed Moisture %: 21
Nozzle Diameter-in.: [illegible]
C Factor: 1.45 / 1.66
Ambient Temperature:
Barometric Pressure: 30.19
Silica Gel #:

Static Pressure:
Traverse Pt.: B8 B3
Pwake: -.86 -.95
Pstatic:

Water Collected:
Impingers, ml.: 911.3
Silica Gel, gms.: 35.6

946.9

VI 521.390

Traverse Point Number	Sampling Time min.	Stack Temp. (Ts) °F	Stack ΔP In. H2O	Orifice ΔH In. H2O	Meter Reading (Vm) ft3	Dry Gas Meter Temp. T in °F	Dry Gas Meter Temp. T out °F	Sample Box Temp. °F	Probe Temp. °F	Impinger Outlet °F	Pump Vac. In Hg.
B12	9	154	1.6	2.05	587.8	68	65	249	250	69/67	9
9	8	157	1.45	1.85		73	67	247	270	70/65	9
*	7	160	1.10	1.25	599.2	80	70	247	273	70/64	7
7	6	160	1.20	1.40	604.6	83	73	249	277	71/64	8
	4	160	1.20	1.40	610.0	85	76	246	278	71/64	8
	1	160	.97	1.01		83	76	245	263	67/61	7
	6.5	160	1.0	1.15	619.6	85	77	245	268	69/63	8
	2	160	1.2	1.4		86	78	246	265	70/65	8
	1	159	.99	1.15	629.6	82	77	244	264	70/65	9
1	10	158	1.1	1.25		81	77	245	264	71/67	10
					VF = 634.782						
Averages											

Galson Technical Services

SAMPLE COLLECTION DATA

1/2

Comments: post test LK 1/2 = .005 cfm @ 17" Hg

Plant: [illegible]
Location: Boiler Chimney
Date: 11/3/90
Run Number: 1 1A 11
Operator: D.G.
Sample Box ID:
Meter Box ID: 001
Probe ID:
Filter #:

Meter θ: 1.01
Meter ΔH@: 1.89
Pitot C.F.: .84
Assumed Moisture %: 33
Nozzle Diameter in.: .213
C Factor: 1.6 1.45
Ambient Temperature: 70°F
Barometric Pressure:
Silica Gel #:

Static Pressure:
Traverse Pt.: A5 A4
Pwake: -1.10 -.45
Pstatic:

Water Collected:
Impingers, ml.:
Silica Gel, gms.:

Start: 12:00 VI = 634.748

XAD 1.10

Traverse Point Number	Sampling Time min.	Stack Temp. (Ts) °F	Stack ΔP in. H2O	Orifice ΔH in. H2O	Meter Reading (Vm) ft3	Dry Gas Meter Temp. T in °F	Dry Gas Meter Temp. T out °F	Sample Box Temp. °F	Probe Temp. °F	Impinger Outlet °F	Pump Vac. in Hg.
A 10	9	160	1.2	1.40	640.0	78	77	263	279	66/70	8
9	18	159	1.2	1.40		78	76	262	269	67/70	9
8	27	157	1.2	1.40		80	75	261	258	65/70	10
*7	36	156	1.4	1.80		78	74	260	252	65/69	12
6	45	156	1.7	2.10		76	74	262	257	65/69	15
5	54	157	1.7	2.10	669.7	77	73	262	250	66/69	15
4	63	157	1.4	1.80	675.9	82	74	263	25[illegible]	67/70	15
3	72	154	1.0	1.25	681.2	79	73	261	249	68/71	12
2	81	156	1.0	1.25	686.4	79	74	262	233	68/71	12
1	90	157	.99	1.25		78	74	261	240	69/71	12
			Stop 61:30		VF = 691.635						
Averages											

Galson Technical Services

Comments:

Plant: Georgia Pacific
Location: [illegible]
Date: [illegible]
Run Number: [illegible]
Operator: D.S.
Sample Box ID:
Meter Box ID: CC1
Probe ID:
Filter #:

Meter Ö: 1.01
Meter ΔH@: 1.89
Pitot C.F.: .84
Assumed Moisture %:
Nozzle Diameter in.: .317
C Factor: 1.45, 1.55
Ambient Temperature: 70°F
Barometric Pressure: 30.17
Silica Gel #:

Static Pressure:
Traverse Pt.: A5
Pwake: -.70
Pstatic:

Water Collected:
Impingers, ml.: 997.5 (1094.3)
Silica Gel, gms.: 96.8

Start C 3:34 VF 692.095 Ice/rnd

Traverse Point Number	Sampling Time min.	Stack Temp. (Ts) °F	Stack ΔP in. H2O	Orifice ΔH in. H2O	Meter Reading (Vm) ft3	Dry Gas Meter Temp. T in °F	Dry Gas Meter Temp. T out °F	Sample Box Temp. °F	Probe Temp. °F	Impinger Outlet °F	Pump Vac. in Hg.
A 10.	9	155	1.5	1.95	698.4	78	77	267	222	70/65	9
9	18	157	1.6	2.05	704.8	74	77	255	242	69/63	10
8	27	158	1.7	2.20	711.7	78	77	256	241	69/63	12
7	36	158	1.8	2.30	718.7	79	77	257	255	69/64	13
6	45	155	1.8	2.30		79	76	260	271	70/64	13
* 5	54	159	1.2	1.45		79	75	260	277	70/64	18
4	63	159	2.4	2.90	739.0	81	75	260	276	70/65	20
3	72	158	1.7	2.00	746.0	79	75	260	270	70/65	15
2	81	158	1.5	1.80	752.2	79	75	259	277	70/65	14
1	90	160	1.1	1.30		79	74	260	279	71/69	11
					VF=757	777					
			Stop 5:04		VF						
Averages											

Galson Technical Services

Comments: post test leak rate dead @ 22" Hg

Plant: Georgia Pacific
Location: Eaton Rapids
Date: 11/3/90
Run Number: #2 PAH
Operator: D.S.
Sample Box ID:
Meter Box ID: 201
Probe ID:
Filter #:

Meter Ø: 1.01
Meter ΔH@: 1.89
Pitot C.F.: .84
Assumed Moisture %: 30
Nozzle Diameter in.: .213
C Factor: 1.55
Ambient Temperature:
Barometric Pressure:
Silica Gel #:

Static Pressure:
Traverse Pt.: B7
Pwake: -.71
Pstatic:

Water Collected:
Impingers, ml.:
Silica Gel, gms.:

Stop @ 1:45 VI: 757.896 XAD/IO

Traverse Point Number	Sampling Time min.	Stack Temp. (Ts) °F	Stack ΔP in. H2O	Orifice ΔH in. H2O	Meter Reading (Vm) ft3	Dry Gas Meter Temp. T in °F	Dry Gas Meter Temp. T out °F	Sample Box Temp. °F	Probe Temp. °F	Impinger Outlet °F	Pump Vac. in Hg
B 10	9	157	.97	1.15		63	64	266	252	59/67	10
9	18	159	1.2	1.45		66	65	260	260	57/65	1.3
8	27	159	1.2	1.45	773.3	70	65	260	238	59/67	13
7	36	158	1.3	1.55	778.9	68	65	245	239	60/68	14
6	45	159	1.4	1.65		70	65	262	242	60/68	16
5	54	160	1.4	1.65	790.6	70	65	262	246	61/68	16
4	63	158	1.35	1.60		73	66	263	250	62/69	16
3	72	158	1.35	1.60		72	65	261	248	62/69	16
2	81	159	1.35	1.60	807.7	70	65	264	244	64/68	14
1	90	159	1.2	1.45		71	66	263	256	66/70	20
					813.741						
Averages											

Galson Technical Services

Comments:

SAMPLE COLLECTION DATA

Plant: Georgia Pacific
Location: [illegible]
Date: [illegible]
Run Number: #3 PAH
Operator: [illegible]
Sample Box ID:
Meter Box ID: [illegible]
Probe ID:
Filter #:

Meter Ø: 1.01
Meter ΔH@: 1.89
Pitot C.F.: .84
Assumed Moisture %: 30
Nozzle Diameter in.: .213
C Factor: 1.45 1.60* 1.45
Ambient Temperature: 65°F
Barometric Pressure: 30.17
Silica Gel #:

Static Pressure:
Traverse Pt.: B 9
Pwake: -.66
Pstatic:

Water Collected:
Impingers, ml.: 1063.5
Silica Gel, grms.: 44.9

(1108.4)

Start @ 9:20 VI = 813.512

Traverse Point Number	Sampling Time min.	Stack Temp. (Ts) °F	Stack ΔP In. H2O	Orifice ΔH In. H2O	Meter Reading (Vm) ft3	Dry Gas Meter Temp. T in °F	Dry Gas Meter Temp. T out °F	Sample Box Temp. °F	Probe Temp. °F	Impinger Outlet °F	Pump Vac. In Hg.
B 10	9	154	1.5	1.90		66	64	267	234	76/68	12
45 9	18	160	1.5	1.90	825.7	74	68	258	245	67/65	12
* 8	27	159	1.6	1.85	831.9	79	71	258	245	67/65	13
60 7	36	159	1.7	1.95	838.2	83	73	259	253	70/66	13
6	45	160	1.6	1.85	844.5	82	75	258	252	70/67	14
5	54	159	1.5	1.70		84	76	256	249	68/65	14
* 4	63	155	1.5	1.90		82	76	255	249	67/63	15
45 3	72	155	1.6	2.0	863.0	82	76	256	252	68/64	16
2	81	156	1.6	2.0	869.5	82	76	257	247	68/65	19
* 1	90	160	1.5	1.75		81	76	256	246	69/66	18
			Stop @ 10:50		VF: 875.771						
Averages											

Galson Technical Services

SAMPLE COLLECTION DATA

Comments: Sampled filter @ A6 vf = 904.551 vi = 904.620 ← filter LK checked

Plant: Georgia Pacific
Location: [illegible]
Date: [illegible]
Run Number: #3 PM
Operator: [illegible]
Sample Box ID: [illegible]
Meter Box ID: [illegible]
Probe ID: [illegible]
Filter #: [illegible]

Meter δ: 1.01
Meter ΔH@: 1.87
Pitot C.F.: .84
Assumed Moisture %: 33 [illegible]
Nozzle Diameter in.: .213
C Factor: 1.45 = 1.60
Ambient Temperature: [illegible]
Barometric Pressure: 30.17
Silica Gel #: [illegible]

Static Pressure:
Traverse Pt.: A3
Pwake: -.62
Pstatic: [illegible]

Water Collected:
Impingers, ml.: [illegible]
Silica Gel, gms.: [illegible]

Start @ 11:20 Vi = 876.148 XAD I 0

Traverse Point Number	Sampling Time min.	Stack Temp. (Ts) °F	Stack ΔP in. H2O	Orifice ΔH in. H2O	Meter Reading (Vm) ft3	Dry Gas Meter Temp. T in °F	Dry Gas Meter Temp. T out °F	Sample Box Temp. °F	Probe Temp. °F	Impinger Outlet °F	Pump Vac. in Hg.
A 10	4	159	1.5	1.75	880.8	74	75	262	265	59/65	15
9	18	159	1.3	1.5	887.8	78	75	263	264	59/65	14
8	27	160	1.5	1.75	893.9	85	77	266	259	61/67	17
7	36	159	1.4	1.65		86	78	264	259	64/68	17
6	45	159	1.6	1.85	905.9	86	79	256	257	65/68	22
45 X4	54	159	1.5	1.75	912.4	83	80	260	267	65/68	10
	63	158	1.7	2.20		82	79	260	252	64/68	15
6c3 X2	72	156	1.7	2.20	926.8	80	78	260	251	65/69	15
	81	160	1.3	1.50	931.7	81	78	260	247	67/71	12
1	90	159	1.2	1.40		81	77	258	255	64/68	11
			stop @ 12:55		VF = 937.293						
Averages											

Pos X xc3 X1 X2 X3 X4 X5 X6 X7 X8 X9 X10 @ 25 H0

See comment

Crystalline Silica Emission Data

Summary of Test Data: Crystalline Silica Emissions

	Run: #3
umber of Sampling Points:	20
uration of the Run (θ), Minutes:	40
ampling Nozzle Diameter, Inches:	0.189
itot Calibration Factor (C_p):	0.84
leter Calibration Factor (γ):	1.004
ack Diameter, Inches:	66
mbient Air Temperature, °F:	65
arometric Pressure (P_b), In. Hg:	30.37
ack Gas Static Pressure in Flue, In. H_2O:	-0.21
ack Gas Absolute Pressure (P_s), In. Hg:	30.35
ack Gas Velocity Head, ($\sqrt{\Delta P}$):	0.984
rifice Pressure Drop (ΔH), In. H_2O:	0.82
olume Sampled (V_m), ft^3 (Meter Cond.):	18.63
ack Gas Temperature (t_s), °F:	154
npinger Outlet Temperature, °F:	54
eter Temperature (t_m), °F:	62
eter Vacuum, In. Hg:	11
olume of Water Condensed (V_{lc}), ml:	154.2
pecific Gravity of Flue Gas (SG):	0.933
ue Gas Composition:	
CO_2	13.0
O_2	7.9
CO	0.2

Sampling Data and Calculations: Crystalline Silica Emissions

	Run: #3
A. Stack Gas Cross Sectional Area (A_s), ft^2:	23.76
B. Volume Sampled (Meter Conditions), ft^3:	18.63
C. Volume Sampled (Std. Conditions), ft^3: [$B * \gamma * (T_{std}/P_{std}) * ((P_b + (\Delta H/13.6))/T_m)$]	19.24
D. Volume of Liquid Water Condensed, ml:	154.2 [a]
E. Vapor Volume (Std. Conditions) of Water, ft^3: [$D * 0.04714$]	7.27
F. Stack Gas Moisture Content, %: [$(E/(E + C)) * 100$]	27.42
G. Stack Gas Velocity, ft/min: [$4005 * \sqrt{\Delta P} * C_p * SQRT((T_s * P_{std})/(T_{std} * P_s * SG))$]	3,672
H. Stack Gas Flow Rate (Stack Cond.), ACFM: [$A * G$]	87,230
I. Stack Gas Flow Rate (Std. Cond. dry), SCFM: [$H * (1 - F/100) * (T_{std}/T_s) * (P_s/P_{std})$]	55,241

Standard Conditions: $T_{std} = 528$ °R ; $P_{std} = 29.92$ in. Hg

$T_s = t_s + 460$; $T_m = t_m + 460$

[a]. The volume of condensate was back-calculated assuming the stack gas was saturated. The stack gas moisture content reflects saturated conditions at stack gas temperature and pressure.

Sampling Data and Calculations: Crystalline Silica Emissions

	Run: #3
J. Particulate Quantity Collected, mg	
1. Quartz	0.06
2. Cristobalite	< 0.03
3. Tridymite	< 0.03
K. Particulate Concentration, mg/m³ [J/C * (35.31/1)]	
1. Quartz	0.110
2. Cristobalite	< 0.055
3. Tridymite	< 0.055
L. Particulate Concentration (At 12% CO_2), mg/m³ [K * (12/%CO_2)]	
1. Quartz	0.102
2. Cristobalite	< 0.051
3. Tridymite	< 0.051
M. Particulate Emission Rate, gm/hr [K * I * (60/1000)/(35.31/1)]	
1. Quartz	10.3
2. Cristobalite	< 5.17
3. Tridymite	< 5.17

Isokinetic Variation Calculation

	Run: #3
Stack Gas Absolute Temperature (T_s), °R:	614
Volume of Liquid Water Condensed (V_{lc}), ml:	154.2
Meter Calibration Factor (γ):	1.004
Volume Sampled (Meter Cond.) (V_m), ft^3:	18.63
Meter Absolute Temperature (T_m), °R:	522
Meter Absolute Pressure (P_m), In. Hg: ($P_b + \Delta H / 13.6$)	30.43
Stack Gas Velocity (v_s), ft/min:	3,672
Stack Gas Absolute Pressure (P_s), In. Hg:	30.35
Cross-Sectional Area of Nozzle, (A_n), ft^2:	0.00019
Duration of the Run (θ), minutes:	40
Isokinetic Percentage (I), %: [1]	106.2

1. Calculated from the Equation:

$$I = [T_s * 100 * ((K_3 * V_{lc}) + (V_m / T_m * \gamma * P_m))] / (\theta * v_s * P_s * A_n)$$

where $K_3 = 0.002669$

Stack Gas Composition and Gas Density Calculations

	Run: #3					
	% Dry Basis	Wet Basis	% Dry Basis	Wet Basis	% Dry Basis	Wet Basis
CO_2	13.0	9.44				
O_2	7.9	5.73				
CO	0.2	0.17				
N_2	78.9	57.24				
H_2O	- - -	27.42				
Molecular Weight[1]	- - -	27.00				
Specific Gravity of Stack Gas[2]	- - -	0.933				

1. Calculated from the equation:
   Molecular Weight = $0.44*(\%CO_2) + 0.32*(\%O_2) + 0.28*(\%N_2 + \%CO) + 0.18*(\%H_2O)$
2. Calculated from the equation:
   SG = Molecular Weight of Stack Gas / Molecular Weight of Air (28.95 gm/gm-mole)

Galson Technical Services

SAMPLE COLLECTION DATA 1/2

Comments:

Plant [illegible]
Location [illegible]
Date [illegible]
Run Number 3
Operator [illegible]
Sample Box ID
Meter Box ID 22
Probe ID
Filter #

Meter δ 1.004
Meter ΔH@ [illegible]
Pitot C.F. [illegible]
Assumed Moisture % [illegible]
Nozzle Diameter in. [illegible]
C Factor [illegible]
Ambient Temperature [illegible]
Barometric Pressure 30.37
Silica Gel #

Static Pressure:
Traverse Pt. B4
Pwake -.42
Pstatic

Water Collected:
Impingers, ml. 2
Silica Gel, gms. 11.8

Start 8:30 Vt = 153.689

Traverse Point Number	Sampling Time min.	Stack Temp. (Ts) °F	Stack ΔP In. H2O	Orifice ΔH In. H2O	Meter Reading (Vm) ft3	Dry Gas Meter Temp. T in °F	Dry Gas Meter Temp. T out °F	Sample Box Temp. °F	Probe Temp. °F	Impinger Outlet °F	Pump Vac. In Hg.
[illegible]	[illegible]	148	.58	.47		64	63	209	258	53	6
[illegible]	[illegible]	152	.72	.60		40	60	219	254	52	14
[illegible]	[illegible]	152	.76	.64	60.4	60	60	223	253	53	12
[illegible]	[illegible]	154	.84	.705		60	60	229	246	52	14
[illegible]	[illegible]	154	1.1	.92	62.3	61	60	230	244	52	15
[illegible]	[illegible]	152	1.0	.84	63.2	61	60	228	243	52	14
[illegible]	[illegible]	154	1.1	.92	64.2	62	60	232	229	52	15
[illegible]	[illegible]	153	1.1	.92	65.1	63	60	230	231	54	16
[illegible]	[illegible]	156	1.0	.84		63	60	230	223	56	16
[illegible]	[illegible]	154	1.2	1.0	67.2	64	61	220	229	59	17
				VF	0.67.77						
Averages											

Galson Technical Services

SAMPLE COLLECTION DATA

12

Comments:

Plant: G/P.
Location: Dayton F.S.
Date: 1.13.90
Run Number: B #3CS
Operator: L.F. / M.L.
Sample Box ID:
Meter Box ID: 002
Probe ID:
Filter #:

Meter δ: 1.94.
Meter ΔH@: 1.004
Pitot C.F.: .84
Assumed Moisture %: 5.5
Nozzle Diameter in.: .159
C Factor: 2.25
Ambient Temperature: 75
Barometric Pressure:
Silica Gel #:

Static Pressure:
Traverse Pt. A9
Pwake: .561
Pstatic:

Water Collected:
Impingers, ml.:
Silica Gel, gms.:

Start: 9:00 (067.777 = VI)

Traverse Point Number	Sampling Time min.	Stack Temp. (Ts) °F	Stack ΔP In. H2O	Orifice ΔH In. H2O	Meter Reading (Vm) ft3	Dry Gas Meter Temp. T in °F	Dry Gas Meter Temp. T out °F	Sample Box Temp. °F	Probe Temp. °F	Impinger Outlet °F	Pump Vac. In Hg.
A1	2	152	.68	.58		66	61	171	194	62	5
2	4	157	1.1	.94		62	60	192	178	60	9
3	6	155	1.1	.94	69.9	63	60	208	183	60	10
4	8	155	1.2	1.0	70.9	62	64	209	192	61	12
5	10	156	1.2	1.0	71.8	64	61	205	196	63	13
6	12	154	1.1	.94	072.8	64	61	208	217	63	12
7	14	157	.98	.80		65	61	227	218	65	12
8	16	154	.95	.79	074.9	66	61	234	217	65	10
9	18	156	.85	.72	075.8	66	62	240	219	65	10
10	20	154	1.0	.84		66	62	244	213	67	11
Stop 9:20				VF =	077.315						
Averages											

CO and THC Emission Data Summary

Supporting Data and Calculations (CO and THC Emission Summary)

Test #	Date	Time	Flowrate* SDCFM	%CO2	Concentration, ppm (dry) CO	Concentration, ppm (dry) THC**	Conc., ppm @ 12% CO2 CO	Conc., ppm @ 12% CO2 THC**	Emission Rate, lbs/hr CO	Emission Rate, lbs/hr THC**
1	7/12/90	1027-1251	53,513	13.2	1,550	79	1,409	72	360.1	10.5
2	7/12/90	1452-1716	50,245	12.8	1,380	48	1,294	45	301.0	6.0
3	7/16/90	0830-0920	55,241	13	2,340	188	2,160	174	561.2	25.8
4	7/13/90	1005-1228	68,581	11.4	2,580	88	2,716	93	768.2	15.0
1	11/3/90	0958-1334	64,478	11.1	980	54	1,059	58	274.3	8.6
2	11/3/90	1538-1945	66,520	11.1	860	41	930	44	248.4	6.8
3	11/4/90	0925-1245	66,787	10.2	910	23	1,071	27	263.9	3.8
4	11/4/90	1350-1455	63,013	10.7	580	16	650	18	158.7	2.5

Notes:

* The Tests 1,2,3, and 4 (7/12-7/16) flow rate data is based on the average flow rates observed during the Multiple Metals and Particulate sampling.
The Tests 1,2,3,and 4(11/3-11/4) flow rate data is based on the average flow rates observed during the PAH and Hexavalent Chromium sampling.

** lbs/hr = ppm x Molecular Weight x SDCFM x 1.55 x 10-7, where the molecular weight of CO = 28; THC as methane = 16
ppm at 12% CO2 = ppm x (12 ÷ %CO2)

ATTACHMENT VI: Laboratory Data

LABORATORY NOMENCLATURE

Sample ID = A uniform code was used to identify all field samples.
(i.e. 72.CH-6-Ben-A)

First part - GTS Job number abbreviation (i.e. 72.CH)

Second part - Sequential run number (i.e. Run 6)

Third part - Parameter(s) tested for:

- BEN - Benzene
- CS - Crystalline Silica
- FORM (F) -Formaldehyde/Acetaldehyde
- HC - Hexavalent Chromium
- MM - Multiple Metals including:
  - As - Arsenic
  - Be - Beryllium
  - Cd - Cadmium
  - Cr - Chromium
  - Cu - Copper
  - Pb - Lead
  - Mn - Manganese
  - Hg - Mercury
  - Ni - Nickel
  - Se - Selenium
  - Zn - Zinc
- PAH - Polycyclic Aromatic Hydrocarbons/Phenols

Fourth part - Container Identification, as defined below:

<u>Benzene samples</u> -

A - Tedlar bag

<u>Crystalline Silica samples</u> -

A - Acetone rinse of nozzle, probe, and filter bell

B - Filter

C - Impinger contents and methylene chloride rinse of three impingers

D. - Silica gel

<u>Formaldehyde samples</u> -

A - DNPH solution from all impingers

<u>Hexavalent Chromium samples</u> -

A. - Impinger solutions; nozzle, probe and filter bell rinse with 0.1N sodium hydroxide; and filter.

B. - 0.1N Nitric acid rinse of entire sampling train

C. - Silica gel

Multiple Metals samples-

A. - Acetone rinse of nozzle, probe and filter bell

B. - Nitric acid/hydrogen peroxide rinse of nozzle, probe and filter bell.

C. - Filter

D. - 1st, 2nd, and 3rd impinger solutions and rinse with nitric acid/hydrogen peroxide

E - 4th impinger solution and rinse with potassium permangenate and sulfuric acid.

F. - Silica gel

Polycyclic Aromatic Hydrocarbon samples -

A. - Methanol, benzene, and methylene chloride rinse of nozzle, probe and filter bell

B. - Filter

C. - Methanol, benzene, and methylene chloride rinse of filter outlet, teflon tubing, and condenser.

D. - XAD-2 resin trap

E - Impinger #1 contents and the methanol, benzene, and methylene chloride rinse of this impinger.

F. - Contents of 2nd and 3rd impingers along with methanol, benzene, and methylene chloride rinse of impingers and connecting glassware.

G. - Silica gel

MDL	=	Minimum detection limit
ppbv	=	parts per billion by volume
µg, uG	=	micrograms
gm, G	=	grams

See specific reports for all other abbreviations.

ALPHA CHEMICAL & BIOMEDICAL LABORATORIES

Joe E. Hodgkins, Ph.D.
Director

July 30, 1990

RECEIVED
AUG 01 1990
Galson Technical Services

GALSON TECHNICAL SERVICES
Attn: Chuck Siu
2116 Berkeley Way
Berkeley, CA. 94704

REPORT
FORMALDEHYDE & ACETALDEHYDE ANALYSIS
PROJECT # S9-072.GP

Sample Identification:

General Information: DNPH-Formaldehyde/Acetaldehyde samples, see results for individual description.

Received in Lab : 7/19/90 11:30 am. See Chain of Custody.

Analysis:

Formaldehyde & Acetaldehyde by High Performance Liquid Chromatography, CARB Method 430.
Sampling impinger solution preparation date: 7/16/90.
Extraction date: 7/23/90.
Analysis date: 7/23/90.

Instrument	:	Perkin-Elmer Series 4 HPLC.
Detector	:	Perkin-Elmer UV @ 360 nm.
Column	:	Brownlee ODS-224 RP-18 4.6 x 220 mm with ODGU guard column.
Mobile phase	:	30:70 ACN:H_2O to ACN
Conditions	:	Linear gradient for 20 min., 5 min. ACN wash.
Flow rate	:	2.0 ml/min
Injection size	:	25 ul

Park Plaza Professional Center, 245 Kentucky Street, Petaluma, California 94952 • (707) 778-8607

GALSON TECHNICAL SERVICES
RE: Project S9-072.GP
July 30, 1990
Page 2

Results:

Sample #	Galson #	Formaldehyde, ug Total	Formaldehyde, ug Blank corrected	Acetaldehyde, ug Total	Acetaldehyde, ug Blank corrected
8920	Test # 5	11.5	11.3	8.40	8.29
8921	Test # 6	37.7	37.5	14.9	14.8
8922	Test # 7	8.67	8.41	3.55	3.44
8923	Test # B	ND		ND	

ND = None Detected

Method Detection Limit for Formaldehyde = 0.4 ug
Method Detection Limit for Acetaldehyde = 0.5 ug

Mark S. Fesler
Analyst

Joe E. Hodgkins, Ph.D., C.T.
Laboratory Director

Enclosure (Chain of Custody)

ACBL

ALPHA CHEMICAL & BIOMEDICAL LABORATORIES

Joe E. Hodgkins, Ph.D.
Director

February 19, 1991

GALSON TECHNICAL SERVICES
Attn: Guy Worthington
2116 Berkeley Way
Berkeley, CA 94704

Dear Mr. Worthington

This memo is being submitted to clarify the test results stated in the report by Alpha Chemical and Biomedical Laboratories, Inc. dated July 30, 1990 (Project# S9-072.GP). On page 2 of the report, two values were reported for each analyte. One value was reported as "Total" and the other "Blank corrected". The total value is the amount of analyte which was found in the sample. The blank corrected value is the amount of analyte which was found in the sample after correcting for the field blank, or in the case, Test# B. The field blank usually has a certain amount of "background" interference which must be subtracted from the sample. In this particular case, the amount of "background" in the travel blank was less than our Method Detection Limit. Therefore, it was reported as None Detected. However, some residual "background" was still present. Our calculations indicated that the residual background for Formaldehyde was 0.26 ug and for Acetaldehyde was 0.11 ug. This residual background was subtracted from the total value to give the blank corrected value.

In order to minimize any confusion in the future, we will report the amount of "background" interference which might be present in the field blank regardless if it is below the Method Detection Limit. I hope this has not caused any inconveniences in interpreting the analytical data. If you have any further questions about the analysis or the report, feel free to contact me at (707)778-8607.

Sincerely,

Mark S. Fesler
Analyst

Park Plaza Professional Center, 245 Kentucky Street, Petaluma, California 94952 • (707) 778-8607

AIR TOXICS LTD.

SAMPLE NAME: 72.GP-5-BENZ-A

ID#: 900719-03A

Stationary Source Test Method - Low Level Benzene

(CARB Method 410A)

Cryofocusing Full Scan GC/MS

File Name:	1072017	Date of Collection:	7/18/90
Dil. Factor:	10	Date of Analysis:	7/20/90

	MDL (ppbv)	Amount (ppbv)
Benzene	10	1500E

Comments: E=Exceeds instrument calibration range but within instrument linear range

AIR TOXICS LTD.

SAMPLE NAME: 72.GP-6-BENZ-A

ID#: 900719-02A

Stationary Source Test Method - Low Level Benzene

(CARB Method 410A)

Cryofocusing Full Scan GC/MS

File Name:	1072015	Date of Collection:	7/18/90
Dil. Factor:	10	Date of Analysis:	7/20/90

	MDL (ppbv)	Amount (ppbv)
Benzene	10	1700E

Comments: E=Exceeds instrument calibration range but within instrument linear range

AIR TOXICS LTD.

SAMPLE NAME: 72.GP-7-BENZ-A

ID#: 900719-01A

Stationary Source Test Method - Low Level Benzene

(CARB Method 410A)

Cryofocusing Full Scan GC/MS

File Name:	1072016	Date of Collection:	7/18/90
Dil. Factor:	10	Date of Analysis:	7/20/90

	MDL (ppbv)	Amount (ppbv)
Benzene	10	300

AIR TOXICS LTD.

SAMPLE NAME: 72.GP-B-BENZ-A

ID#: 900719-04A

Stationary Source Test Method - Low Level Benzene

(CARB Method 410A)

Cryofocusing Full Scan GC/MS

File Name:	1072012	Date of Collection:	7/18/90
Dil. Factor:	2.0	Date of Analysis:	7/20/90

	MDL (ppbv)	Amount (ppbv)
Benzene	2.0	9.8

AIR TOXICS LTD.

SAMPLE NAME: LAB BLANK

ID#: 900719-05A

Stationary Source Test Method - Low Level Benzene

(CARB Method 410A)

Cryofocusing Full Scan GC/MS

File Name:	1072004	Date of Collection:	NA
Dil. Factor:	2.0	Date of Analysis:	7/20/90

	MDL (ppbv)	Amount (ppbv)
Benzene	2.0	ND

AIR TOXICS LTD.

SAMPLE NAME: METHOD SPIKE

ID#: 900719-05B

Stationary Source Test Method - Low Level Benzene

(CARB Method 410A)

Cryofocusing Full Scan GC/MS

File Name:	1071903	Date of Collection:	NA
Dil. Factor:	3.7	Date of Analysis:	7/19/90

	MDL (ppbv)	Recovery (%)
Benzene	3.7	116

AIR TOXICS LTD.

SAMPLE NAME: METHOD SPIKE DUPLICATE

ID#: 900719-05C

Stationary Source Test Method - Low Level Benzene

(CARB Method 410A)

Cryofocusing Full Scan GC/MS

File Name:	1072014	Date of Collection:	NA
Dil. Factor:	1.0	Date of Analysis:	7/20/90

	MDL (ppbv)	Recovery (%)
Benzene	1.0	99

Galson Laboratories

6601 Kirkville Road
E. Syracuse, NY 13057
Tel: (315) 432-0506
1-800-950-0506

LABORATORY ANALYSIS REPORT

Client: TIMBER ASSOCIATES OF CALIFORNIA
Task Number: 90072418 Job Number: S9072.GPLL
Location: GEORGIA PACIFIC Date Sampled: 07/12-07/16

	Lab ID:	J15654	J15655	J15656	J15657BL	METHOD BLANK
	Client ID:	72.GP-1-MM-A-D	72.GP-2-MM-A-D	72.GP-4-MM-A-D	72.GP-B-MM-A-D	NA
ARSENIC	TOTAL MG	0.067	0.073	0.017	<0.001	<0.001
BERYLLIUM		<0.001	<0.001	<0.001	<0.001	<0.001
CADMIUM		<0.001	<0.001	0.002	<0.001	<0.001
CHROMIUM		0.009	0.006	0.018	0.002	0.030
COPPER		0.055	0.051	0.077	<0.005	0.006
LEAD		0.028	0.026	0.062	0.003	0.014
MANGANESE		0.43	0.21	0.33	0.11	0.031
MERCURY*		0.0015	0.0019	0.0024	<0.0012	<0.0011
NICKEL		<0.008	<0.008	0.012	<0.008	0.009
SELENIUM		<0.01	<0.01	<0.01	<0.001	<0.001
ZINC		0.65	0.62	0.97	0.061	0.042

Method(s): EPA DRAFT MULTIPLE METALS METHOD DATED AUGUST 28, 1989.

Footnotes: CONTAINERS A/C, B AND D WERE COMBINED PRIOR TO ANALYSIS *RESULTS ARE TOTAL VALUES FROM COMBINED CONTAINERS A-D AND CONTAINER E. RESULTS FOR THE FRACTIONS ARE PRESENTED ON THE FOLLOWING PAGE.

Submitted by: AN,KB,PH
Approved by: Mary E Withrow
Date: 9-AUG-1990

(<) - Less Than
(>) - Greater Than
NA - Not Applicable
ND - Not detectable
NS - Not specified
MG - Milligrams
L - Liters
M^3 - Cubic Meter
MG/M^3 - Milligrams Per Cubic Meter
PPM - Parts Per Million
UG - Micrograms
NG - Nanograms
BL - Blank

Galson Laboratories
6601 Kirkville Road
E. Syracuse, NY 13057
Tel: (315) 432-0506
1-800-950-0506

LABORATORY ANALYSIS REPORT

Client: TIMBER ASSOCIATES OF CALIFORNIA
Task Number: 90072418 Job Number: S9072.GPLL
Location: GEORGIA PACIFIC Date Sampled: 07/12-07/16

MERCURY

Lab ID:	J15654	J15655	J15656	J15657BL	METHOD BLANK
Client ID:	72.GP-1-MM	72.GP-2-MM	72.GP-4-MM	72.GP-B-MM	NA
CONTAINER E TOTAL MG	0.0015	0.0019	0.0024	<0.0004	<0.0003
CONTAINER A-D	<0.0008	<0.0008	<0.0008	<0.0008	<0.0008
TOTAL	0.0015	0.0019	0.0024	<0.0012	<0.0011

Method(s): EPA DRAFT MULTIPLE METALS METHOD DATED AUGUST 28, 1989

Footnotes:

(<) - Less Than
(>) - Greater Than
NA - Not Applicable
ND - Not detectable
NS - Not specified
MG - Milligrams
L - Liters
M^3 - Cubic Meter
MG/M^3 - Milligrams Per Cubic Meter
PPM - Parts Per Million
UG - Micrograms
NG - Nanograms
BL - Blank

Submitted by: PH
Approved by: Mary G Arthrow
Date: 9-AUG-1990

A division of Galson Technical Services, Inc

Galson
Technical Services

PARTICULATE ANALYSIS REPORT - FILTER SAMPLES

Project Name: TAC - Georgia Pacific
Project No.: S9-072.GP

Sample ID	Filter ID	Sample Date	Tare (gm)	Final (gm)	Diff. (gm)	Blk-Correct. Diff. (gm)
Blank #1	146	7/12/90	0.5000	0.5040	0.0040	NA
Test #1	173	7/12/90	0.5160	0.6000	0.0840	0.0800
Test #2	171	7/12/90	0.5204	0.6000	0.0796	0.0756
Test #4A	162	7/16/90	0.4949	0.5901	0.0952	0.0912
Test #4B	161	7/16/90	0.4929	0.5485	0.0556	0.0516
Test #4-Total	NA	NA	NA	NA	NA	0.1428
Blank #2	249	11/4/90	0.6139	0.6143	0.0004	NA
Test #4 (11/4)	246	11/4/90	0.5092	0.5585	0.0493	0.0489

NA: Not applicable

Method: EPA Multiple Metals/CARB 5
Date : 11/8/90
Analyst: R. King
Reviewed: M. Ludwiczak

Galson
Technical Services

Galson Technical Services, Inc.
2116 Berkeley Way
Berkeley, CA 94704
Tel: (415) 848-0389
FAX: (415) 848-0838

PARTICULATE ANALYSIS REPORT - RINSE SAMPLES

Project Name: TAC - Georgia Pacific
Project No.: S9-072.GP

Sample ID	Lab ID	Sample Date	Tare (gm)	Final (gm)	Diff. (gm)	Blk-Correct. Diff. (gm)
Blank #1	UU	7/12/90	106.4112	106.4136	0.0024	NA
Test #1	XX	7/12/90	104.3009	104.3172	0.0163	0.0139
Test #2	100	7/12/90	103.4030	103.4132	0.0102	0.0078
Test #4	101	7/16/90	105.1173	105.1386	0.0213	0.0189
Blank #2	170	11/4/90	103.8172	103.8177	0.0005	NA
Test # 4 (11/4)	171	11/4/90	104.3031	104.3169	0.0138	0.0133

NA: Not applicable

Method: EPA Multiple Metals/CARB 5
Date : 11/8/90
Analyst: R. King
Reviewed: M. Ludwiczak

Galson Laboratories

6601 Kirkville Road
E. Syracuse, NY 13057
Tel: (315) 432-0506
1-800-950-0506

LABORATORY ANALYSIS REPORT

Client: TIMBER ASSOCIATION OF CALIFORNIA
Task Number: 90110618 Job Number: S9072.GPLL
Location: GEORGIA PACIFIC Date Sampled: 11/03-11/04

CONDENSIBLE PARTICULATE-ORGANIC FRACTION

Sample ID	Lab ID	AVE TARE G	AVE FINAL G	WEIGHT GAIN G	BLANK CORRECTED G
72.GP-4-PART-C	J23615	29.9117	29.9119	0.0002	-0.0003
72.GP-B-PART C	J23616BL	29.4294	29.4299	0.0005	NA
72.GP-3-CS-C	J15617	30.3978	30.4022	0.0044	0.0032
69-B-P-C	J15616BL	29.7417	29.7429	0.0012	NA

Method(s): CARB 5
Footnotes:

(<) - Less Than
(>) - Greater Than
NA - Not Applicable
ND - Not detectable
NS - Not specified
MG - Milligrams
L - Liters
M3 - Cubic Meter
MG/M3 - Milligrams Per Cubic Meter
PPM - Parts Per Million
UG - Micrograms
NG - Nanograms
G - Grams
WT - Weight

Submitted by: BB,PP
Approved by: O. Bedurka
Date: 16-NOV-1990

Galson Laboratories

6601 Kirkville Road
E. Syracuse, NY 13057
Tel: (315) 432-0506
1-800-950-0506

LABORATORY ANALYSIS REPORT

Client: TIMBER ASSOCIATION OF CALIFORNIA
Task Number: 90110618 Job Number: S9072.GPLL
Location: GEORGIA PACIFIC Date Sampled: 11/03-11/04

CONDENSIBLE PARTICULATE-WATER SOLUBLE FRACTION

Sample ID	Lab ID	AVE TARE G	AVE FINAL G	WEIGHT GAIN G	BLANK CORRECTED G
72.GP-4-PART-C	J23615	29.3179	29.3204	0.0025	0.0020
72.GP-B-PART C	J23616BL	29.1947	29.1952	0.0005	NA
72.GP-3-CS-C	J15617	30.4193	30.4304	0.0111	0.0110
69-B-P-C	J15616BL	29.9527	29.9528	0.0001	NA

Method(s): CARB 5
Footnotes:

(<) - Less Than
(>) - Greater Than
NA - Not Applicable
ND - Not detectable
NS - Not specified
MG - Milligrams
L - Liters
M3 - Cubic Meter
MG/M3 - Milligrams Per Cubic Meter
PPM - Parts Per Million
UG - Micrograms
NG - Nanograms
G - Grams
WT - Weight

Submitted by: BB
Approved by: O.B. [illegible]
Date: 16-NOV-1990

Galson Laboratories

6601 Kirkville Road
E. Syracuse, NY 13057
Tel: (315) 432-0506
1-800-950-0506

LABORATORY ANALYSIS REPORT

Client: TIMBER ASSOCIATION OF CALIFORNIA
Task Number: 90110618 Job Number: S9072.GPLL
Location: GEORGIA PACIFIC Date Sampled: 11/03-11/04

	Lab ID:	J23611	J23612	J23613	J23614BL
	Client ID:	72.GP-1-HC	72.GP-2-HC	72.GP-3-HC	72.GP-B-HC
HEXAVALENT CHROMIUM	TOTAL MG				
CONTAINER A		<0.03	<0.03	<0.03	<0.007
TOTAL CHROMIUM					
CONTAINER A		0.027	0.014	<0.01	0.004
CONTAINER B		0.004	0.005	0.003	<0.001

HEXAVALENT CHROMIUM QC DATA

ID	% RECOVERY
QC	99
BLANK SPIKE	107
72.GP-1-HC SPIKE	92
72.GP-3-HC SPIKE	73

Method(s): CARB 425
Footnotes:

(<) - Less Than
(>) - Greater Than
NA - Not Applicable
ND - Not detectable
NS - Not specified
MG - Milligrams
L - Liters
M^3 - Cubic Meter
MG/M^3 - Milligrams Per Cubic Meter
PPM - Parts Per Million
UG - Micrograms
NG - Nanograms
BL - Blank

Submitted by: SM,AN
Approved by: [illegible]
Date: 16-NOV-1990

Galson
Technical Services

SILICA GEL ANALYSIS REPORT

Project Name: TAC - Georgia Pacific
Project No.: S9-072.GP

Sample ID	Lab ID	Sample Date	Tare (gm)	Final (gm)	Diff. (gm)	Blk-Correct. Diff. (gm)
Blank #1	1330	7/12/90	300.0	300.4	0.4	NA
Test #1 (MM)	1331	7/12/90	300.0	333.2	33.2	32.8
Test #2A (MM)	1339	7/12/90	300.0	332.6	32.6	32.2
Test #2B (MM)	1341	7/16/90	300.0	320.0	20.0	19.6
Test #2 (MM) Total	NA	NA	NA	NA	NA	51.8
Test #4 (MM)	1335	7/16/90	300.0	361.5	61.5	61.1
Blank #2	1501	11/3/90	300.0	300.1	0.1	NA
Test # 1 (HC) 1of2	1488	11/3/90	300.0	367.8	67.8	67.7
Test # 1 (HC) 2of2	1499	11/3/90	300.0	338.9	38.9	38.8
Test # 2 (HC)	1463	11/3/90	300.0	459.6	159.6	159.5
Test # 3 (HC)	1495	11/3/90	300.0	371.7	71.7	71.6
Test # 1 (PAH)	1450	11/3/90	300.0	335.7	35.7	35.6
Test # 2 (PAH)	1491	11/3/90	300.0	396.9	96.9	96.8
Test # 3 (PAH)	1477	11/3/90	300.0	345.0	45.0	44.9
Test # 4 (P)	1497	11/3/90	300.0	320.0	20.0	19.9

(MM)-Multiple Metals Sampling Train
(HC)-Hexavalent Chromium Sampling Train
(PAH)-Polycyclic Aromatic Hydrocarbon Sampling Train
(P)-Particulate Sampling Train

Method: CARB 4
Date : 11/8/90
Analyst: R. King
Reviewed: M. Ludwiczak

Curtis & Tompkins, Ltd.

LABORATORY NUMBER: 102181
CLIENT: GALSON TECHNICAL SERVICES
PROJECT #: S9-072

DATE RECEIVED: 11/06/90
DATE REPORTED: 11/20/90

CASE NARRATIVE

Due to an equipment malfunction, sample 2-PAH (Laboratory ID 102181-2) was concentrated to dryness during the extraction procedure and resulted in low recovery for the surrogate standard 2-fluorobiphenyl. Based on the surrogate recovery, we believe the actual concentrations of the target analytes to be higher than reported.

Curtis & Tompkins, Ltd.

LABORATORY NUMBER: 102181-1
CLIENT: GALSON TECHNICAL SERVICES, INC.
PROJECT ID: S9-072
SAMPLE ID: 1-PAH

DATE RECEIVED: 11/06/90
DATE ANALYZED: 11/14/90
DATE REPORTED: 11/19/90

Determination of Polycyclic Aromatic Hydrocarbons (PAH) Emissions
from Stationary Sources
Method: CARB 429

COMPOUND	RESULT ug/train	REPORTING LIMIT ug/train
Naphthalene	1,200	10
Acenaphthylene	160	10
Acenaphthene	12	10
Fluorene	36	10
Phenanthrene	180	10
Anthracene	11	10
Fluoranthene	59	10
Pyrene	38	10
Benzo(a)anthracene	ND	10
Chrysene	ND	10
Benzo(b)fluoranthene	ND	10
Benzo(k)fluoranthene	ND	10
Benzo(a)pyrene	ND	10
Indeno(1,2,3-cd)pyrene	ND	10
Dibenzo(a,h)anthracene	ND	10
Benzo(g,h,i)perylene	ND	10

ND = Not detected at or above reporting limit.

QA/QC SURROGATE RECOVERY

2-Fluorophbiphenyl	83 %
Terphenyl-d14	70 %
Acntracene-d-10	106 %

Curtis & Tompkins, Ltd.

LABORATORY NUMBER: 102181-2
CLIENT: GALSON TECHNICAL SERVICES, INC.
PROJECT ID: S9-072
SAMPLE ID: 2-PAH

DATE RECEIVED: 11/06/90
DATE ANALYZED: 11/14/90
DATE REPORTED: 11/19/90

Determination of Polycyclic Aromatic Hydrocarbons (PAH) Emissions from Stationary Sources
Method: CARB 429

COMPOUND	RESULT ug/train	REPORTING LIMIT ug/train
Naphthalene	5.5	1.0
Acenaphthylene	23	1.0
Acenaphthene	2.1	1.0
Fluorene	7.1	1.0
Phenanthrene	46	1.0
Anthracene	2.3	1.0
Fluoranthene	20	1.0
Pyrene	13	1.0
Benzo(a)anthracene	1.2	1.0
Chrysene	ND	1.0
Benzo(b)fluoranthene	ND	1.0
Benzo(k)fluoranthene	ND	1.0
Benzo(a)pyrene	ND	1.0
Indeno(1,2,3-cd)pyrene	ND	1.0
Dibenzo(a,h)anthracene	ND	1.0
Benzo(g,h,i)perylene	ND	1.0

ND = Not detected at or above reporting limit.

QA/QC SURROGATE RECOVERY

2-Fluorophbiphenyl	8 %
Terphenyl-d14	54 %
Antracene d-10	41 %

Curtis & Tompkins, Ltd.

LABORATORY NUMBER: 102181-3
CLIENT: GALSON TECHNICAL SERVICES, INC.
PROJECT ID: S9-072
SAMPLE ID: 3-PAH

DATE RECEIVED: 11/06/90
DATE ANALYZED: 11/14/90
DATE REPORTED: 11/19/90

Determination of Polycyclic Aromatic Hydrocarbons (PAH) Emissions from Stationary Sources
Method: CARB 429

COMPOUND	RESULT ug/train	REPORTING LIMIT ug/train
Naphthalene	430	1.0
Acenaphthylene	26	1.0
Acenaphthene	2.7	1.0
Fluorene	6.1	1.0
Phenanthrene	36	1.0
Anthracene	2.4	1.0
Fluoranthene	16	1.0
Pyrene	10	1.0
Benzo(a)anthracene	ND	1.0
Chrysene	ND	1.0
Benzo(b)fluoranthene	2.2	1.0
Benzo(k)fluoranthene	ND	1.0
Benzo(a)pyrene	ND	1.0
Indeno(1,2,3-cd)pyrene	ND	1.0
Dibenzo(a,h)anthracene	ND	1.0
Benzo(g,h,i)perylene	ND	1.0

ND = Not detected at or above reporting limit.

QA/QC SURROGATE RECOVERY

2-Fluorophbiphenyl	49 %
Terphenyl-d14	59 %
Antracene d-10	66 %

Curtis & Tompkins, Ltd.

LABORATORY NUMBER: 102181-4
CLIENT: GALSON TECHNICAL SERVICES, INC.
PROJECT ID: S9-072
SAMPLE ID: 4-PAH

DATE RECEIVED: 11/06/90
DATE ANALYZED: 11/14/90
DATE REPORTED: 11/19/90

Determination of Polycyclic Aromatic Hydrocarbons (PAH) Emissions
from Stationary Sources
Method: CARB 429

COMPOUND	RESULT ug/train	REPORTING LIMIT ug/train
Naphthalene	41	1.0
Acenaphthylene	ND	1.0
Acenaphthene	ND	1.0
Fluorene	ND	1.0
Phenanthrene	ND	1.0
Anthracene	ND	1.0
Fluoranthene	ND	1.0
Pyrene	ND	1.0
Benzo(a)anthracene	ND	1.0
Chrysene	ND	1.0
Benzo(b)fluoranthene	ND	1.0
Benzo(k)fluoranthene	ND	1.0
Benzo(a)pyrene	ND	1.0
Indeno(1,2,3-cd)pyrene	ND	1.0
Dibenzo(a,h)anthracene	ND	1.0
Benzo(g,h,i)perylene	ND	1.0

ND = Not detected at or above reporting limit.

QA/QC SURROGATE RECOVERY

2-Fluorophbiphenyl	66 %
Terphenyl-d14	62 %
Antracene d-10	91 %

Curtis & Tompkins, Ltd.

LABORATORY NUMBER: METHOD BLANK
CLIENT: GALSON TECHNICAL SERVICES, INC.
PROJECT ID: S9-072

DATE RECEIVED: 11/06/90
DATE ANALYZED: 11/14/90
DATE REPORTED: 11/19/90

Determination of Polycyclic Aromatic Hydrocarbons (PAH) Emissions
from Stationary Sources
Method: CARB 429

COMPOUND	RESULT ug/train	REPORTING LIMIT ug/train
Naphthalene	7.9	1.0
Acenaphthylene	ND	1.0
Acenaphthene	ND	1.0
Fluorene	ND	1.0
Phenanthrene	ND	1.0
Anthracene	ND	1.0
Fluoranthene	ND	1.0
Pyrene	ND	1.0
Benzo(a)anthracene	ND	1.0
Chrysene	ND	1.0
Benzo(b)fluoranthene	ND	1.0
Benzo(k)fluoranthene	ND	1.0
Benzo(a)pyrene	ND	1.0
Indeno(1,2,3-cd)pyrene	ND	1.0
Dibenzo(a,h)anthracene	ND	1.0
Benzo(g,h,i)perylene	ND	1.0

ND = Not detected at or above reporting limit.

QA/QC SURROGATE RECOVERY

2-Fluorophbiphenyl	62 %
Terphenyl-d14	58 %
Antracene d-10	69 %

RJ LeeGroup

The Materials Characterization Specialists

August 6, 1990

RECEIVED

AUG 0 8 1990

Galson Technical Services

Mr. Mark Ludwiczak
Galson Technical Services, Inc.
2116 Berkeley Way
Berkeley, CA 94704

Re: RJ Lee Group Project Number: SIC007313
Customer Purchase Order: S9-072.GP

Dear Mark:

Enclosed are the results of the above referenced samples. These consisted of two solutions containing acetone and two filters. The purpose of our analysis was to determine the mass of crystalline silica phases in each sample using x-ray diffraction analysis. The procedures employed followed the general protocol of NIOSH 7500 method for crystalline silica analysis with modifications to the sample preparation techniques to account for the non-standard sample types. Analysis was performed on a Philips 3100 XRD unit, equipped with graphite monochromatized copper radiation.

The two filters were low-temperature ashed and the solids were re-deposited on pre-weighed silver membrane filters. The two acetone solutions were also filtered onto silver membranes. Because the sample acetone solution appeared to contain too much solid for the standad NIOSH 7500 the sample volume was measured (74ml) and a 10 ml aliquot was deposited onto the silver membrane, This deposit weighed 0.80mg, an ideal weight for x-ray analysis. Both the total deposit weight for this sample and the free silica content were corrected back to the total solution volume, to provide the reported values. The blank filter and acetone solution showed insignificant weight gains (<.01mg). The sample filter and sample probe wash contained sufficient solids for x-ray analysis. These samples and probe wash were examined by slow scan XRD according to the NIOSH 7500 procedure.

The results of these analyses are listed on the enclosed table. No detectable cristobalite or tridymite was observed. Detection limits for these phases are <0.01mg for the blanks, and <0.03mg for the two samples.

These results are submitted pursuant to RJ Lee Group's current terms and conditions of sale, including the company's standard warranty and limitation of liability provisions and no responsibility or liability is assumed for the manner in which the results are used or interpreted. Unless notified in writing to return the samples covered by this report, RJ Lee Group will store the samples for a period of ninety (90) days before discarding. A shipping and handling fee will be assessed for the return of any samples.

If you have any questions on this report or if we can be of further assistance, please feel free to call me.

Sincerely,

Gary A. Cooke

Gary A. Cooke
Manager, Analytical Chemistry

GAC/ljm
Enclosure
cc: Boyd Clark

Table I

SIC007313

For Galson Technical Services, Inc.

Client Sample Number	RJ Lee Sample Number	Total Solids (mg)	Quartz (mg)	Analytical Method
72-GP-B-CS-B	90209	<.01	<.005	LTA/XRD
72-GP-B-CS-A	90210	<.01	<.005	Filtration/XRD
72-GP-3-CS-B	90211	1.59	.016	LTA/XRD
72-GP-3-CS-A	90212	5.92	.044	Filtration/XRD

Authorized Signature Gary A. Coyle

Date 3/6/90

RJ Lee Group, Inc.
Headquarters

350 Hochberg Road
Monroeville, PA 15146

(412) 325-1776
FAX (412) 733-1799

ATTACHMENT VII: Project Personnel

PROJECT PERSONNEL

Timber Association of California

Steve Petrin ..... Project Director

Chuck Sassenrath, PE ..... Engineering Consultant

Georgia Pacific

Art Owens ..... Powerhouse Superintendant
Dyarl Burns ..... Powerhouse Supervisor

Galson Technical Services, Inc.

Chuck Siu, CIH ..... Office Manager
David Galson, PE ..... Department Manager
Mark Ludwiczak ..... Project Manager
Dale Roberts ..... Environmental Engineer
Robert Ramer ..... Environmental Scientist
Richard Partlow ..... Environmental Scientist
Dave Stewart ..... Environmental Technician
Tim Zapf ..... Environmental Technician
Ed Stuber ..... Laboratory Coordinator

Curtis & Tomkins, Ltd.

Jeanne Evans ..... Laboratory Director

Air Toxics, Ltd

Linda Freeman ..... Laboratory Director

Alpha Chemical & Biomedical Laboratories

Joe E. Hodgkins, Ph.D. ..... Laboratory Director
Mark Fesler ..... Laboratory Analyst

RJ Lee Group

Gary A. Cooke ..... Manager, Analytical Chemistry

Galson Technical Services

PRE-TEST & POST-TEST SYSTEM DRIFT CHECKS

Plant I. D. Georgia Pacific Project No. [illegible]

Source Unit 3 Exhaust Operator [illegible]

Pollutant CO_2 Analyzer I. D. Horiba PIA-2000

Comments:

Run No. 4 Date/Time 7/16/90 1005-1228

	Analyzer Calibration Response	Initial values: System Calibration Response	Initial values: System bias (% of span)	Final values: System Calibration Response	Final values: System bias (% of span)	Drift (% of span)
Zero gas	0.0	0.0	0.0	0.15	+0.15	+0.15
Mid-range	10.2	10.2	0.0	10.2	0.0	0.0

Run No. 5 Date/Time 7/18/90 0920-945

	Analyzer Calibration Response	Initial values: System Calibration Response	Initial values: System bias (% of span)	Final values: System Calibration Response	Final values: System bias (% of span)	Drift (% of span)
Zero gas	0.0	0.0	0.0	0.0	0.0	0.0
Mid-range	10.2	10.2	0.0	10.2	0.0	0.0

Run No. 6 Date/Time 7/18/90 1005-1050

	Analyzer Calibration Response	Initial values: System Calibration Response	Initial values: System bias (% of span)	Final values: System Calibration Response	Final values: System bias (% of span)	Drift (% of span)
Zero gas	0.0	0.0	0.0	0.0	0.0	0.0
Mid-range	10.2	10.2	0.0	10.2	0.0	0.0

$$\text{System calibration bias} = \frac{\text{System calibration response} - \text{Analyzer calibration response}}{\text{Span}} \times 100$$

$$\text{Drift} = \frac{\text{Final system response} - \text{Initial system calibration response response}}{\text{Span}} \times 100$$

Galson Technical Services

Comments:

PRE-TEST & POST-TEST SYSTEM DRIFT CHECKS

Plant I. D. Georgia Pacific

Project No. 59-072.GP

Source Unit 3 Exhaust

Operator DR

Pollutant CO_2

Analyzer I. D. HORIBA PIR 2000

Run No. 7

Date/Time 7/8/10 1111-1156

	Analyzer Calibration Response	Initial values: System Calibration Response	Initial values: System bias (% of span)	Final values: System Calibration Response	Final values: System bias (% of span)	Drift (% of span)
Zero gas	0.0	0.0	0.0	0.0	0.0	0.0
Mid-range	10.2	10.2	0.0	10.35	1.0%	1.0

Run No. _____ Date/Time _____

	Analyzer Calibration Response	Initial values: System Calibration Response	Initial values: System bias (% of span)	Final values: System Calibration Response	Final values: System bias (% of span)	Drift (% of span)
Zero gas						
Mid-range						

Run No. _____ Date/Time _____

	Analyzer Calibration Response	Initial values: System Calibration Response	Initial values: System bias (% of span)	Final values: System Calibration Response	Final values: System bias (% of span)	Drift (% of span)
Zero gas						
Mid-range						

$$\text{System calibration bias} = \frac{\text{System calibration response} - \text{Analyzer calibration response}}{\text{Span}} \times 100$$

$$\text{Drift} = \frac{\text{Final system response} - \text{Initial system calibration response response}}{\text{Span}} \times 100$$

Galson Technical Services

PRE-TEST & POST-TEST SYSTEM DRIFT CHECKS

Plant I. D. Georgia Pacific Project No. 89-[illegible]

Source Unit 3 Exhaust Operator DR

Pollutant O_2 Analyzer I. D. IR 2200

Comments:

Run No. 1 Date/Time 7/12/90 10:27 – 1255

0-25% scale

	Analyzer Calibration Response	Initial values: System Calibration Response	Initial values: System bias (% of span)	Final values: System Calibration Response	Final values: System bias (% of span)	Drift (% of span)
Zero gas	0.0	0.0	0.0	0.0	0.0	0.0
Mid-range	12.0	12.0	0.0	12.1	+0.4	+0.4

Run No. 2 Date/Time 7/12/90 1455 – 1719

	Analyzer Calibration Response	Initial values: System Calibration Response	Initial values: System bias (% of span)	Final values: System Calibration Response	Final values: System bias (% of span)	Drift (% of span)
Zero gas	0.0	0.0	0.0	0.0	0.0	0.0
Mid-range	12.0	12.0	0.0	12.0	0.0	0.0

Run No. 3 Date/Time 7/13/90 0830 – 925

	Analyzer Calibration Response	Initial values: System Calibration Response	Initial values: System bias (% of span)	Final values: System Calibration Response	Final values: System bias (% of span)	Drift (% of span)
Zero gas	[illegible]	0.0	[illegible]	0.0	0.0	0.0
Mid-range	[illegible]	[illegible]	0.0	12.0	0.0	0.0

$$\text{System calibration bias} = \frac{\text{System calibration response} - \text{Analyzer calibration response}}{\text{Span}} \times 100$$

$$\text{Drift} = \frac{\text{Final system response} - \text{Initial system calibration response response}}{\text{Span}} \times 100$$

Galson Technical Services

PRE-TEST & POST-TEST SYSTEM DRIFT CHECKS

Plant I. D. Georgia Pacific Project No. 90-070.GP

Source Unit 3 Exhaust Operator DR

Pollutant O_2 Analyzer I. D. FK 2200

Comments:

Run No. 4 Date/Time 7/18/90 1005-1228

	Analyzer Calibration Response	Initial values: System Calibration Response	Initial values: System bias (% of span)	Final values: System Calibration Response	Final values: System bias (% of span)	Drift (% of span)
Zero gas	0.0	0.0	0.0	0.0	0.0	0.0
Mid-range	12.0	12.0	0.0	12.2	+0.8	+0.8

Run No. 5 Date/Time 7/18/90 700-945

	Analyzer Calibration Response	Initial values: System Calibration Response	Initial values: System bias (% of span)	Final values: System Calibration Response	Final values: System bias (% of span)	Drift (% of span)
Zero gas	0.0	0.0	0.0	0.0	0.0	0.0
Mid-range	19.6	19.6	0.0	19.6	0.0	0.0

Run No. 6 Date/Time 7/18/90 1005-1050

	Analyzer Calibration Response	Initial values: System Calibration Response	Initial values: System bias (% of span)	Final values: System Calibration Response	Final values: System bias (% of span)	Drift (% of span)
Zero gas	0.0	0.0	0.0	0.0	0.0	0.0
Mid-range	19.6	19.6	0.0	19.6	0.0	0.0

$$\text{System calibration bias} = \frac{\text{System calibration response} - \text{Analyzer calibration response}}{\text{Span}} \times 100$$

$$\text{Drift} = \frac{\text{Final system response} - \text{Initial system calibration response response}}{\text{Span}} \times 100$$

Galson Technical Services

PRE-TEST & POST-TEST SYSTEM DRIFT CHECKS

Plant I. D. Georgia Pacific

Project No. 99-072.GP

Source Unit 3 Exhaust

Operator AR

Pollutant O_2

Analyzer I. D. IR 2200

Comments:

Run No. 7

Date/Time 7/18/00 1111 – 1156

	Analyzer Calibration Response	Initial values: System Calibration Response	Initial values: System bias (% of span)	Final values: System Calibration Response	Final values: System bias (% of span)	Final values: Drift (% of span)
Zero gas	0.0	0.0	0.0	0.0	0.0	0.0
Mid-range	12.0	12.0	0.0	12.1	+0.4	+0.4

Run No. _____ Date/Time _____

	Analyzer Calibration Response	Initial values: System Calibration Response	Initial values: System bias (% of span)	Final values: System Calibration Response	Final values: System bias (% of span)	Final values: Drift (% of span)
Zero gas						
Mid-range						

Run No. _____ Date/Time _____

	Analyzer Calibration Response	Initial values: System Calibration Response	Initial values: System bias (% of span)	Final values: System Calibration Response	Final values: System bias (% of span)	Final values: Drift (% of span)
Zero gas						
Mid-range						

$$\text{System calibration bias} = \frac{\text{System calibration response} - \text{Analyzer calibration response}}{\text{Span}} \times 100$$

$$\text{Drift} = \frac{\text{Final system response} - \text{Initial system calibration response response}}{\text{Span}} \times 100$$

Galson Technical Services

PRE-TEST & POST-TEST SYSTEM DRIFT CHECKS

Plant I. D. Georgia Pacific Project No. 5-072.GF

Source Unit 3 Exhaust Operator AR

Pollutant THC Analyzer I. D. Rotfloch RS5

Comments:

Run No. 1 Date/Time 7/12/90 10:27-1255

0-500ppm scale

	Initial values			Final values		
	Analyzer Calibration Response	System Calibration Response	System bias (% of span)	System Calibration Response	System bias (% of span)	Drift (% of span)
Zero gas	0.0	0.0	0.0	0.0	0.0	0.0
Mid-range	453	453	0.0	465	+2.4	+2.4

Run No. 2 Date/Time 7/12/90 1455-1719

	Initial values			Final values		
	Analyzer Calibration Response	System Calibration Response	System bias (% of span)	System Calibration Response	System bias (% of span)	Drift (% of span)
Zero gas	0.0	0.0	0.0	0.0	0.0	0.0
Mid-range	453	453	0.0	450	-0.6	-0.6

Run No. 3 Date/Time 7/13/90 0930-0935

	Initial values			Final values		
	Analyzer Calibration Response	System Calibration Response	System bias (% of span)	System Calibration Response	System bias (% of span)	Drift (% of span)
Zero gas	0.0	0.0	0.0	0.0	0.0	0.0
Mid-range	453	453	0.0	440	-2.6	-2.6

$$\text{System calibration bias} = \frac{\text{System calibration response} - \text{Analyzer calibration response}}{\text{Span}} \times 100$$

$$\text{Drift} = \frac{\text{Final system response} - \text{Initial system calibration response response}}{\text{Span}} \times 100$$

Galson Technical Services

PRE-TEST & POST-TEST SYSTEM DRIFT CHECKS

Plant I. D. Georgia Pacific

Project No. [illegible]

Source Unit 3 Exhaust

Operator DR

Pollutant THC

Analyzer I. D. Rat Fisch RS-55

Comments:

Run No. 4

Date/Time 7/16/90 1005-1228

	Analyzer Calibration Response	Initial values: System Calibration Response	Initial values: System bias (% of span)	Final values: System Calibration Response	System bias (% of span)	Drift (% of span)
Zero gas	0.0	0.0	0.0	0.0	0.0	0.0
Mid-range	453	453	0.0	440	-2.6	-2.6

Run No. 5

Date/Time 7/16/90 0900-0945

	Analyzer Calibration Response	Initial values: System Calibration Response	Initial values: System bias (% of span)	Final values: System Calibration Response	System bias (% of span)	Drift (% of span)
Zero gas	[illegible]	[illegible]	[illegible]	0.0	0.0	0.0
Mid-range	[illegible]	453	0.0	445	-1.6	-1.6

Run No. 6

Date/Time 7/16/90 1005-1050

	Analyzer Calibration Response	Initial values: System Calibration Response	Initial values: System bias (% of span)	Final values: System Calibration Response	System bias (% of span)	Drift (% of span)
Zero gas	0.0	0.0	0.0	0.0	0.0	0.0
Mid-range	453	453	0.0	445	-1.6	-1.6

$$\text{System calibration bias} = \frac{\text{System calibration response} - \text{Analyzer calibration response}}{\text{Span}} \times 100$$

$$\text{Drift} = \frac{\text{Final system response} - \text{Initial system calibration response response}}{\text{Span}} \times 100$$

Galson Technical Services

PRE-TEST & POST-TEST SYSTEM DRIFT CHECKS

Plant I. D. Georgia Pacific Project No. 59-072.GP

Source Unit 3 Exhaust Operator RR

Pollutant THC Analyzer I. D. Rotfisch RS55

Comments:

Run No. 7 Date/Time 7/18/90 1111-1156

	Initial values			Final values		
	Analyzer Calibration Response	System Calibration Response	System bias (% of span)	System Calibration Response	System bias (% of span)	Drift (% of span)
Zero gas	0.0	0.0	0.0	0.0	0.0	0.0
Mid-range	453	453	0.0	453	0.0	0.0

Run No. _____ Date/Time _____

	Initial values			Final values		
	Analyzer Calibration Response	System Calibration Response	System bias (% of span)	System Calibration Response	System bias (% of span)	Drift (% of span)
Zero gas						
Mid-range						

Run No. _____ Date/Time _____

	Initial values			Final values		
	Analyzer Calibration Response	System Calibration Response	System bias (% of span)	System Calibration Response	System bias (% of span)	Drift (% of span)
Zero gas						
Mid-range						

$$\text{System calibration bias} = \frac{\text{System calibration response} - \text{Analyzer calibration response}}{\text{Span}} \times 100$$

$$\text{Drift} = \frac{\text{Final system response} - \text{Initial system calibration response response}}{\text{Span}} \times 100$$

Galson -Technical Services

PRE-TEST & POST-TEST SYSTEM DRIFT CHECKS

Plant I. D. Georgia Pacific Project No. 59072.6P

Source Boiler 3 Exhaust Operator DR

Pollutant CO Analyzer I. D. TECO Model 48

Comments:

Run No. 1 Date/Time 11/3/90 0955-1334

0-2000 Span M

	Analyzer Calibration Response	Initial values: System Calibration Response	Initial values: System bias (% of span)	Final values: System Calibration Response	Final values: System bias (% of span)	Drift (% of span)
Zero gas	0.0	0.0	0.0	0.0	0.0	0.0
Mid-range	2059	2059	0.0	2078	+1.0	+1.0

Run No. 2 Date/Time 11/3/90 1534-1950

	Analyzer Calibration Response	Initial values: System Calibration Response	Initial values: System bias (% of span)	Final values: System Calibration Response	Final values: System bias (% of span)	Drift (% of span)
Zero gas	0.0	0.0	0.0	0.0	0.0	0.0
Mid-range	2059	2059	0.0	2103	+2.2	+2.2

Run No. 3 Date/Time 11/4/90 0920-[illegible]

	Analyzer Calibration Response	Initial values: System Calibration Response	Initial values: System bias (% of span)	Final values: System Calibration Response	Final values: System bias (% of span)	Drift (% of span)
Zero gas	0.0	0.0	0.0	0.0	0.0	0.0
Mid-range	2059	2059	0.0	2037	-1.0	-1.0

$$\text{System calibration bias} = \frac{\text{System calibration response} - \text{Analyzer calibration response}}{\text{Span}} \times 100$$

$$\text{Drift} = \frac{\text{Final system response} - \text{Initial system calibration response response}}{\text{Span}} \times 100$$

Galson Technical Services

PRE-TEST & POST-TEST SYSTEM DRIFT CHECKS

Comments:

Plant I. D. Georgia Pacific Project No. 9072.GP

Source Boiler #3 Exhaust Operator DK

Pollutant CO Analyzer I. D. TECO Mod. 148

Run No. 4 Date/Time 11/4/90 1350-1455

	Analyzer Calibration Response	Initial values: System Calibration Response	Initial values: System bias (% of span)	Final values: System Calibration Response	Final values: System bias (% of span)	Drift (% of span)
Zero gas	0.0	0.0	0.0	0.0	0.0	0.0
Mid-range	2059	2059	0.0	2041	-0.9	-0.9

Run No. _____ Date/Time _____

	Analyzer Calibration Response	Initial values: System Calibration Response	Initial values: System bias (% of span)	Final values: System Calibration Response	Final values: System bias (% of span)	Drift (% of span)
Zero gas						
Mid-range						

Run No. _____ Date/Time _____

	Analyzer Calibration Response	Initial values: System Calibration Response	Initial values: System bias (% of span)	Final values: System Calibration Response	Final values: System bias (% of span)	Drift (% of span)
Zero gas						
Mid-range						

$$\text{System calibration bias} = \frac{\text{System calibration response} - \text{Analyzer calibration response}}{\text{Scan}} \times 100$$

$$\text{Drift} = \frac{\text{Final system response} - \text{Initial system calibration response response}}{\text{Span}} \times 100$$

Galson Technical Services

PRE-TEST & POST-TEST SYSTEM DRIFT CHECKS

Comments:

Plant I. D. Georgia Pacific Project No. 54-072.6P

Source Boiler #3 Exhaust Operator DR

Pollutant CO_2 Analyzer I. D. HORIBA PIR 2000

Run No. 1 Date/Time 11/3/90 0955-1334

	Analyzer Calibration Response	Initial values: System Calibration Response	Initial values: System bias (% of span)	Final values: System Calibration Response	Final values: System bias (% of span)	Final values: Drift (% of span)
Zero gas	0.0	0.0	0.0	0.0	0.0	0.0
Mid-range	10.2	10.2	0.0	10.5	2.0	2.0

Run No. 2 Date/Time 11/3/90 1534-1950

	Analyzer Calibration Response	Initial values: System Calibration Response	Initial values: System bias (% of span)	Final values: System Calibration Response	Final values: System bias (% of span)	Final values: Drift (% of span)
Zero gas	0.0	0.0	0.0	0.0	0.0	0.0
Mid-range	10.2	10.2	0.0	10.2	0.0	0.0

Run No. 3 Date/Time 11/4/90 0920-1255

	Analyzer Calibration Response	Initial values: System Calibration Response	Initial values: System bias (% of span)	Final values: System Calibration Response	Final values: System bias (% of span)	Final values: Drift (% of span)
Zero gas	0.0	0.0	0.0	0.0	0.0	0.0
Mid-range	10.2	10.2	0.0	10.2	0.0	0.0

$$\text{System calibration bias} = \frac{\text{System calibration response} - \text{Analyzer calibration response}}{\text{Span}} \times 100$$

$$\text{Drift} = \frac{\text{Final system response} - \text{Initial system calibration response response}}{\text{Span}} \times 100$$

Galson Technical Services

PRE-TEST & POST-TEST SYSTEM DRIFT CHECKS

Plant I. D. Georgia Pacific Project No. 59-072GP

Source Boiler #2 Exhaust Operator DR

Pollutant CO_2 Analyzer I. D. HORIBA PIR-2000

Comments:

Run No. 4 Date/Time 11/4/90 1350-1455

	Analyzer Calibration Response	Initial values: System Calibration Response	Initial values: System bias (% of span)	Final values: System Calibration Response	Final values: System bias (% of span)	Final values: Drift (% of span)
Zero gas	0.0	0.0	0.0	0.0	0.0	0.0
Mid-range	10.2	10.2	10.2	9.9	-2.0	-2.0

Run No. _____ Date/Time _____

	Analyzer Calibration Response	Initial values: System Calibration Response	Initial values: System bias (% of span)	Final values: System Calibration Response	Final values: System bias (% of span)	Final values: Drift (% of span)
Zero gas						
Mid-range						

Run No. _____ Date/Time _____

	Analyzer Calibration Response	Initial values: System Calibration Response	Initial values: System bias (% of span)	Final values: System Calibration Response	Final values: System bias (% of span)	Final values: Drift (% of span)
Zero gas						
Mid-range						

$$\text{System calibration bias} = \frac{\text{System calibration response} - \text{Analyzer calibration response}}{\text{Span}} \times 100$$

$$\text{Drift} = \frac{\text{Final system response} - \text{Initial system calibration response response}}{\text{Span}} \times 100$$

Galson -Technical Services

Comments:

PRE-TEST & POST-TEST SYSTEM DRIFT CHECKS

Plant I. D. Georgia Pacific

Project No. 54-072.GP

Source Boiler 3 Exhaust

Operator DR

Pollutant O_2

Analyzer I. D. IR 2200

Run No. 1

Date/Time 11/3/90 0955-1334

	Analyzer Calibration Response	Initial values: System Calibration Response	Initial values: System bias (% of span)	Final values: System Calibration Response	Final values: System bias (% of span)	Final values: Drift (% of span)
Zero gas	0.0	0.0	0.0	0.0	0.0	0.0
Mid-range	9.7	9.7	0.0	9.9	+0.8	+0.8

Run No. 2

Date/Time 11/3/90 1534-1950

	Analyzer Calibration Response	Initial values: System Calibration Response	Initial values: System bias (% of span)	Final values: System Calibration Response	Final values: System bias (% of span)	Final values: Drift (% of span)
Zero gas	0.0	0.0	0.0	0.0	0.0	0.0
Mid-range	9.7	9.7	0.0	9.7	0.0	0.0

Run No. 3

Date/Time 11/4/90 0920-1255

	Analyzer Calibration Response	Initial values: System Calibration Response	Initial values: System bias (% of span)	Final values: System Calibration Response	Final values: System bias (% of span)	Final values: Drift (% of span)
Zero gas	0.0	0.0	0.0	0.0	0.0	0.0
Mid-range	9.7	9.7	0.0	9.7	0.0	0.0

$$\text{System calibration bias} = \frac{\text{System calibration response} - \text{Analyzer calibration response}}{\text{Span}} \times 100$$

$$\text{Drift} = \frac{\text{Final system response} - \text{Initial system calibration response response}}{\text{Span}} \times 100$$

Galson Technical Services

PRE-TEST & POST-TEST SYSTEM DRIFT CHECKS

Plant I. D. Georgia Pacific Project No. 57-072.GP

Source Boiler 3 Exhaust Operator DR

Pollutant O_2 Analyzer I. D. ER2200

Comments:

Run No. 4 Date/Time 11/4/90 1350-1455

	Initial values			Final values		
	Analyzer Calibration Response	System Calibration Response	System bias (% of span)	System Calibration Response	System bias (% of span)	Drift (% of span)
Zero gas	0.0	0.0	0.0	0.0	0.0	0.0
Mid-range	9.7	9.7	0.0	9.7	0.0	0.0

Run No. _____ Date/Time _____

	Initial values			Final values		
	Analyzer Calibration Response	System Calibration Response	System bias (% of span)	System Calibration Response	System bias (% of span)	Drift (% of span)
Zero gas						
Mid-range						

Run No. _____ Date/Time _____

	Initial values			Final values		
	Analyzer Calibration Response	System Calibration Response	System bias (% of span)	System Calibration Response	System bias (% of span)	Drift (% of span)
Zero gas						
Mid-range						

$$\text{System calibration bias} = \frac{\text{System calibration response} - \text{Analyzer calibration response}}{\text{Span}} \times 100$$

$$\text{Drift} = \frac{\text{Final system response} - \text{Initial system calibration response response}}{\text{Span}} \times 100$$

Galson Technical Services

PRE-TEST & POST-TEST SYSTEM DRIFT CHECKS

Comments:

Plant I. D. Georgia Pacific

Project No. 54-072.GP

Source Boiler #3 Exhaust

Operator DR

Pollutant THC

Analyzer I. D. Rattfisch RS55

Run No. 1

Date/Time 11/3/90 0955-1334

	Analyzer Calibration Response	Initial values: System Calibration Response	Initial values: System bias (% of span)	Final values: System Calibration Response	Final values: System bias (% of span)	Drift (% of span)
Zero gas	0.0	5.0	5.0	0.0	0.0	-7.0
Mid-range	453	453	0.0	450	-0.6	-0.6

Run No. 2

Date/Time 11/3/90 1534-1950

	Analyzer Calibration Response	Initial values: System Calibration Response	Initial values: System bias (% of span)	Final values: System Calibration Response	Final values: System bias (% of span)	Drift (% of span)
Zero gas	0.0	0.0	0.0	-5.0	-1.0	-1.0
Mid-range	453	453	0.0	440	-2.6	-2.6

Run No. 3

Date/Time 11/4/90 0920-1255

	Analyzer Calibration Response	Initial values: System Calibration Response	Initial values: System bias (% of span)	Final values: System Calibration Response	Final values: System bias (% of span)	Drift (% of span)
Zero gas	0.0	0.0	0.0	0.0	0.0	0.0
Mid-range	40.6	40.6	0.0	30	-2.1	-2.1

$$\text{System calibration bias} = \frac{\text{System calibration response} - \text{Analyzer calibration response}}{\text{Span}} \times 100$$

$$\text{Drift} = \frac{\text{Final system response} - \text{Initial system calibration response response}}{\text{Span}} \times 100$$

Galson Technical Services

PRE-TEST & POST-TEST SYSTEM DRIFT CHECKS

Plant I. D. Georgia Pacific Project No. 59-072.6P

Source Boiler 3 Exhaust Operator DR

Pollutant THC Analyzer I. D. Rattfield RS53

Comments:

Run No. 4 Date/Time 11/4/90 1350-1455

	Initial values			Final values		
	Analyzer Calibration Response	System Calibration Response	System bias (% of span)	System Calibration Response	System bias (% of span)	Drift (% of span)
Zero gas	0.0	0.0	0.0	-5.0	-1.0	-1.0
Mid-range	40.6	40.6	0.0	50	+1.9	+1.9

Run No. _____ Date/Time _____

	Initial values			Final values		
	Analyzer Calibration Response	System Calibration Response	System bias (% of span)	System Calibration Response	System bias (% of span)	Drift (% of span)
Zero gas						
Mid-range						

Run No. _____ Date/Time _____

	Initial values			Final values		
	Analyzer Calibration Response	System Calibration Response	System bias (% of span)	System Calibration Response	System bias (% of span)	Drift (% of span)
Zero gas						
Mid-range						

$$\text{System calibration bias} = \frac{\text{System calibration response} - \text{Analyzer calibration response}}{\text{Span}} \times 100$$

$$\text{Drift} = \frac{\text{Final system response} - \text{Initial system calibration response response}}{\text{Span}} \times 100$$

POST-TEST CALIBRATION DATA

Galson
Technical Services, Inc.
2116 Berkeley Way
Berkeley, CA 94704
Tel: (415) 848-0389

POST TEST CALIBRATION - DRY GAS METER

Plant GEORGIA PACIFIC Job # 89-272 GP
Source UNIT 3 Meter Box ID 002
Barometric Pressure, in Hg 29.90 Date 7/20/90

ORIFICE READING ($\Delta H_@$) in. H2O	WET TEST METER GAS VOLUME (Vw) ft3	WET TEST METER TEMP. (Tw) °F	DRY GAS METER GAS VOLUME (Vo) ft3	TEMPERATURE DATA °F Time	$T_{D\ in}$	$T_{D\ out}$	$T_{D\ avg}$	TIME Δt min.	γ	$\Delta H_@$
1.0	5	532	172.688		71	70	532	9.33	1.000	1.96
			167.698		73	71				
			4.990		74	71				
					74	72				
1.0	5	532	177.686		74	72	534.3	9.38	1.002	1.97
			172.688		75	73				
			4.998		76	73				
					77	74				
1.0	5	532	182.688		77	74	536.4	9.43	1.005	1.99
			177.686		77	75				
			5.002		78	76				
					78	76				

	γ	$\Delta H_@$
AVERAGE	1.002	1.97
PRE-TEST γ	1.004	1.94

$$\gamma = \frac{V_w}{V_D}\left(\frac{T_{D\ avg}+460}{T_w+460}\right)\frac{P_b}{\left(P_b+\frac{\Delta H_@}{13.6}\right)}$$

Vacuum Setting, in. Hg. 6"

$$\Delta H_@ = 0.0317\Delta H_D\left(\frac{t}{V_w}\right)^2\frac{(T_w+460)^2}{P_b(T_D+460)}$$

POST TEST CALIBRATION - TEMPERATURE SENSORS

	Ambient (°R)	% Diff.	Other (°R)	% Diff.
Reference	530	0	672	0
Stack Thermocouple ID#	530		672	
Reference	528	0	672	0
Gas Meter Inlet ID#	528		672	
Reference	528	0	672	0
Gas Meter Outlet ID#	528		672	
Reference	528	0.2	672	0.1
Condenser Outlet ID#	529		673	
Reference	530	0	729	0.3
Heated Oven Box ID#	530		727	

Technician: TZ Date: 7/20/90

NA = Not Applicable

Galson
Technical Services, Inc.
2116 Berkeley Way
Berkeley, CA 94704
Tel: (415) 848-0389

POST TEST CALIBRATION - DRY GAS METER

Plant GEORGIA PACIFIC Job # 59-072GP
Source UNIT 3 Meter Box ID 001
Barometric Pressure, in Hg 29.90 Date 7/20/90

ORIFICE READING ($\Delta H_@$) in. H2O	WET TEST METER GAS VOLUME (Vw) ft3	WET TEST METER TEMP. (Tw) °F	DRY GAS METER GAS VOLUME (Vo) ft3	TEMPERATURE DATA °F Time	$T_{D\ in}$	$T_{D\ out}$	$T_{D\ avg}$	TIME Δt min.	γ	$\Delta H_@$
1.0	5	532	923.759 918.570 5.189		80 80 81 81	80 80 80 80	540.3	9.15	.976	1.86
1.0	5	532	928.935 923.759 5.176		81 81 82 83	80 80 81 82	541.3	9.15	.980	1.86
1.0	5	532	934.143 928.935 5.208		81 82 83 83	80 81 82 82	541.6	9.22	.975	1.88
								AVERAGE	0.977	1.87
								PRE-TEST γ	1.018	1.86

$$\gamma = \frac{V_w}{V_D}\left(\frac{T_{D\ avg}+460}{T_w+460}\right)\frac{P_b}{\left(P_b+\frac{\Delta H_@}{13.6}\right)}$$

$$\Delta H_@ = 0.0317\,\Delta H_D\left(\frac{t}{V_w}\right)^2\frac{(T_w+460)^2}{P_b\,(T_D+460)}$$

Vacuum Setting, in. Hg. 6"

POST TEST CALIBRATION - TEMPERATURE SENSORS

	Ambient (°R)	% Diff.	Other (°R)	% Diff.
Reference	530	0	672	0
Stack Thermocouple ID#	530		672	
Reference	528	0	672	0
Gas Meter Inlet ID#	528		672	
Reference	528	0	672	0
Gas Meter Outlet ID#	528		672	
Reference	529	0.2	672	0.1
Condenser Outlet ID#	530		671	
Reference	530	1.3	731	1.2
Heated Oven Box ID#	537		740	

Technician: TZ Date: 7/20/90

NA = Not Applicable

Galson
Technical Services, Inc.
2118 Berkeley Way
Berkeley, CA 94704
Tel: (415) 848-0389

POST TEST CALIBRATION - DRY GAS METER

Plant Georgia Pacific Job # 89-077 - 6P
Source Boiler exhaust Meter Box ID PG 1
Barometric Pressure, in Hg 30.23 Date 11/7/90

ORIFICE READING ($H_@$) in. H2O	WET TEST METER GAS VOLUME (V_w) ft3	WET TEST METER TEMP. (T_w) °F	DRY GAS METER GAS VOLUME (V_D) ft3	DRY GAS METER TEMPERATURE DATA °F Time	$T_{D\ in}$	$T_{D\ out}$	$T_{D\ avg}$	TIME Δt min.	γ	$\Delta H_@$
.5	5.0	529	985.174		84	79	541	7.80	1.020	1.98
			980.174		84	79				
			5.02		84	79				
1.5	5.0	529	990.571		82	80	541	7.91	1.010	1.98
			985.530		84	80				
			5.03		84	80				
1.5	5.0	529	995.644		83	80	541	7.84	1.010	2.02
			990.600		84	80				
			5.04		84	80				

	γ	$\Delta H_@$
AVERAGE	1.010	1.99
PRE-TEST γ	1.010	1.89

$$\gamma = \frac{V_w}{V_D}\left(\frac{T_{D\ avg}+460}{T_w+460}\right)\frac{P_b}{\left(P_b+\frac{\Delta H_@}{13.6}\right)}$$

Vacuum Setting, in. Hg. 13"

$$\Delta H_@ = 0.0317\Delta H_D\left(\frac{t}{V_w}\right)^2\frac{(T_w+460)^2}{P_b(T_D+460)}$$

POST TEST CALIBRATION - TEMPERATURE SENSORS

	Ambient (°R)	% Diff.	Other (°R)	% Diff.
Reference	530	0%	672	0%
Stack Thermocouple ID#	530		672	
Reference	528	0%	672	0%
Gas Meter Inlet ID#	528		672	
Reference	528 R	0%	672	0%
Gas Meter Outlet ID#	528°R		672	
Reference	529	0.2	672	0.1
Condenser Outlet ID#	530		671	
Reference	530	1.3	731	1.2
Heated Oven Box ID#	537		740	

Technician: D. Date: 11/7/90

NA = Not Applicable

Galson
Technical Services, Inc.
2118 Berkeley Way
Berkeley, CA 94704
Tel: (415) 848-0389

POST TEST CALIBRATION - DRY GAS METER

Plant Georgia Pacific Job # 59-072-6 P
Source Boiler exhaust Meter Box ID 007
Barometric Pressure, in Hg 30.27 Date 11/5/90

ORIFICE READING ($H_@$) in. H2O	WET TEST METER GAS VOLUME (Vw) ft3	WET TEST METER TEMP. (Tw) °F	DRY GAS METER GAS VOLUME (Vo) ft3	TEMPERATURE DATA °F Time	$T_{D\ in}$	$T_{D\ out}$	$T_{D\ avg}$	TIME Δt min.	γ	$\Delta H_@$
2.0	5.0	530	766.632		75	70	534	6.67	1.010	1.95
			761.699		77	71				
			4.98		77	71				
2.0	5.0	530	771.6[illegible]		77	71	535	6.70	1.015	1.98
			766.6[illegible]		78	72				
			5.00		79	72				
2.0	5.0	530	776.704		78	73	536	6.72	0.970	1.98
			771.686		80	73				
			5.02		80	74				

$$\gamma = \frac{V_w}{V_D}\left(\frac{T_{D\ avg}+460}{T_w+460}\right)\frac{P_b}{\left(P_b+\frac{\Delta H_@}{13.6}\right)}$$

$$\Delta H_@ = 0.0317\Delta H_D\left(\frac{t}{V_w}\right)^2\frac{(T_w+460)^2}{P_b\,(T_D+460)}$$

Vacuum Setting, in. Hg. 2"

	γ	$\Delta H_@$
AVERAGE	1.000	1.97
PRE-TEST γ	1.005	1.84

POST TEST CALIBRATION - TEMPERATURE SENSORS

	Ambient (°R)	% Diff.	Other (°R)	% Diff.
Reference	530	0%	672	0%
Stack Thermocouple ID#	530		672	
Reference	528	0%	672	0%
Gas Meter Inlet ID#	528		672	
Reference	528	0%	672	0%
Gas Meter Outlet ID#	528		672	
Reference	528	0.2	672	0.1
Condenser Outlet ID#	529		673	
Reference	530	0	729	0.3
Heated Oven Box ID#	530		727	

Technician: [illegible] Date: 11/[illegible]

NA = Not Applicable

ATTACHMENT V: Field Data And Calculations

NOMENCLATURE

A_s	=	Stack Cross Sectional Area (ft^2)
A_n	=	Nozzle Cross Sectional Area (ft^2)
ACFM	=	Actual cubic feet per minute
SCFM	=	Flow rate - standard cubic feet per minute.on a dry basis
C_p	=	Pitot Calibration Factor
Δt	=	Sample Time (minutes)
DSCF	=	Dry standard cubic feet
°F, °R	=	Temperature - degrees fahrenheit, Temperature (460 + °F)
ft^2, ft^3	=	square foot, cubic foot
fpm	=	Feet per minute
γ	=	meter calibration factor
gm-mole	=	gram-mole
ΔH	=	Orifice pressure drop (inches H_2O)
Hg	=	Mercury
hr, min, sec	=	Hour, minutes, seconds
in. H_2O	=	inches of water
in. Hg	=	inches of mercury
l, ml	=	liters, milliliters
l/min	=	liters per minute
m^3	=	cubic meter
gr, gm, mg, µg, ng	=	grains, grams, milligrams, micrograms, nanograms(10^{-9})
P_b	=	Barometric Pressure (inches of Mercury)
P_m	=	Absolute meter Pressure (inches of Mercury)
ppm, ppb	=	parts per million, parts per billion
P_s	=	Stack gas absolute pressure (inches of Mercury)
P_{std}	=	Pressure, standard conditions (inches of Mercury)
$\sqrt{\Delta P}$	=	Stack gas velocity head (inches of $H_2O)^{1/2}$
SG	=	Specific gravity
θ	=	Test duration (minutes)
t_m, T_m	=	Meter temperature (°F), (°R)
t_s, T_s	=	Stack gas temperature (°F), (°R)
T_{std}	=	Temperature, standard conditions (°R)
T_o	=	Average orifice temperature during test (°F)
T_{oc}	=	Average orifice temperature during calibration.(°F)
V_{lc}	=	Volume of liquid water condensed (liters)
v_s	=	Stack gas velocity (feet per minute)
13.6	=	Specific gravity of mercury

Formaldehyde and Benzene Emission Data

Summary of Test Data: Aldehyde Emissions

	Run: #5	Run: #6	Run: #7
Sampling Data			
Duration of the Run (θ), Minutes:	45	45	45
Ambient Air Temperature, °F	60	60	60
Barometric Pressure (P_b), in. Hg	30.33	30.33	30.33
Avg Orifice Temp @ Calib Cond (T_{oc}), °F	56	56	55
Avg Orifice Temp @ Test Cond (T_o), °F	55	51	53
Avg Sampling Rate @ Calib Cond, l/min	0.87	0.83	0.87
Velocity Data			
Number of Sampling Points:	20	20	20
Pitot Calibration Factor (C_p):	0.84	0.84	0.84
Stack Diameter, Inches:	66	66	66
Stack Gas Static Pressure in Flue, In. H_2O:	-0.31	-0.29	-0.27
Stack Gas Absolute Pressure (P_s), In. Hg:	30.31	30.31	30.31
Stack Gas Velocity Head, ($\sqrt{\Delta P}$):	1.145	1.134	1.124
Stack Gas Temperature (ts), °F:	161	162	163
Stack Gas Moisture Percent: [1]	32.60	33.40	34.20
Specific Gravity of Flue Gas (SG):	0.905	0.902	0.901

1. Source of Moisture Percentage Data: Calculated based on saturated gas conditions

Sampling Data and Calculations: Aldehyde Emissions

	Run: #5	Run: #6	Run: #7
A. Stack Gas Cross Sectional Area (A_s), ft^2:	23.76	23.76	23.76
B. Stack Gas Moisture Percent: [1]	32.60	33.40	34.20
Avg Sampling Rate @ Calib Cond, l/min	0.87	0.83	0.87
Avg Sampling Rate @ Test Cond., l/min Avg Sampling Rate @ Calib Cond.*SQRT(T_o/T_{oc})	0.86	0.83	0.87
Volume Sampled @ Test Cond., l Avg Sampling Rate @ Test Cond. * Test Duration	38.9	37.3	39.1
Volume Sampled @ STD Cond, ft^3 [(Volume Sampled @ Test Cond./28.32) * (P_b/P_{std}) * (T_{std}/Avg Orifice Temp @ Test in °R)] [1]	1.429	1.378	1.443
C. Stack Gas Velocity, ft/min: [4005 * $\sqrt{\Delta P}$ + C_p * SQRT((T_s * P_{std})/(T_{std} * P_s * SG))]	4,366	4,333	4,299
D. Stack Gas Flow Rate (stack cond.), ACFM: A * C]	03,733	102,933	102,133
E. Stack Gas Flow Rate (std. cond. dry), SCFM [D * (1 - B/100) * (T_{std}/T_s) * (P_s/P_{std})]	60,186	58,950	57,713

[1] Source of Moisture Percentage Data: Calculated based on saturated gas conditions

Standard Conditions: T_{std} = 528 °R ; P_{std} = 29.92 in. Hg

$T_s = t_s + 460$; $T_m = t_m + 460$

Sampling Data and Calculations: Aldehyde Emissions

	Run: #5	Run: #6	Run: #7
Organics Quantity Collected, µg			
Acetaldehyde	8.29	14.8	3.44
Formaldehyde	11.3	37.5	8.41
Organics Concentration, mg/m^3 [(Mass/Vol Sampled STD) * (0.03531/1)]			
Acetaldehyde	0.205	0.379	0.084
Formaldehyde	0.279	0.961	0.206
Organics Concentrations, ppm [Concentration * 24.04358/M.W. of parameter]			
Acetaldehyde (MW=>44.1)	0.112	0.207	0.046
Formaldehyde (MW=>30)	0.224	0.770	0.165
Organics Concentrations (At 12% CO_2), ppm [Concentration * (12/%CO_2)]			
Acetaldehyde	0.122	0.226	0.047
Formaldehyde	0.244	0.840	0.168
Organics Emission Rate, gm/hr [Conc.* Stack Gas Flow Rate * (0.06/1000)/(0.03531/1)]			
Acetaldehyde	21.0	38.0	8.25
Formaldehyde	28.6	96.3	20.2

Gaison
Technical Services, Inc.
2118 Berkeley Way
Berkeley, CA 94704
Tel: (415) 848-0389
Fax: (415) 848-0838

Orifice and Dry Test Meters

Date 6/15/90 Wet Test Meter ID 1

Meter Box ID 001 Barometric Pressure 29.25

ORIFICE READING (ΔH_D) in. H_2O	WET TEST METER GAS VOLUME (V_W) ft^3	WET TEST METER TEMP. (T_W) °F	DRY GAS METER GAS VOLUME (V_D) ft^3	TEMPERATURE DATA °F Time	$T_{D\,in}$	$T_{D\,out}$	$T_{D\,avg}$	TIME Δt min.	γ	ΔH_a
.5	5	530	693.254 698.131 4.902		76 77 77	72 71 71	535	12.75	1.009	1.806
1	5	530	700.101 705.026 4.92		77 77	71 71	536	8.85	1.025	1.737
2	10	530	705.23 715.115 9.885		75 82	79 71	538	13.62	1.013	2.05
3	10	5	715.302 725.[illegible] 9.965		78 80 82	71 19 80	539	11.1	1.013	2.04
								Average	1.015	1.91

$$\gamma = \frac{V_W}{V_D}\left(\frac{T_{D\,avg}+460}{T_W+460}\right)\frac{P_b}{\left(P_b+\frac{\Delta H_D}{13.6}\right)}$$

Technician: [illegible]

$$\Delta H_a = 0.0317\,\Delta H_D\left(\frac{1}{V_W}\right)^2\frac{(T_W+460)^2}{P_b(T_D+460)}$$

Stack Gas Composition and Gas Density Calculations

	Run: #5		Run: #6		Run: #7	
	% Dry Basis	Wet Basis	% Dry Basis	Wet Basis	% Dry Basis	Wet Basis
CO_2	11.0	7.41	11.0	7.33	11.8	7.76
O_2	10.0	6.74	10.3	6.86	9.4	6.19
CO	0.1	0.07	0.1	0.07	0.2	0.13
N_2	78.9	53.18	78.6	52.35	78.6	51.72
H_2O	- - -	32.60	- - -	33.40	- - -	34.20
Molecular Weight[1]	- - -	26.20	- - -	26.11	- - -	26.07
Specific Gravity of Stack Gas[2]	- - -	0.905	- - -	0.902	- - -	0.901

1. Calculated from the equation:
   Molecular Weight = $0.44*(\%CO_2) + 0.32*(\%O_2) + 0.28*(\%N_2 + \%CO) + 0.18*(\%H_2O)$
2. Calculated from the equation:
   SG = Molecular Weight of Stack Gas / Molecular Weight of Air (28.95 gm/gm-mole)

FIELD DATA – CRITICAL ORIFICE

PLANT [illegible] RUN No. 5 AMBIENT TEMP. (°F) 60

LOCATION [illegible] CONTAMINANTS [illegible] BARO. PRESS. (In. Hg) 30.33

DATE 7/18/90 OPERATOR RP/RR

CALIBRATION DATA

CALIBRATION RUN No.	BURETTE VOL. (cc)	ORIFICE TEMP. (°F)	TIME (sec)
PRE-TEST-1	200	56	13.11
2			13.62
3			13.61
Avg.			13.89

FLOW (l/min): 0.864

POST-TEST-1	200	55	13.89
2			13.85
3			13.78
Avg.			13.84

FLOW (l/min): 0.867

Average Flow (l/min)	0.866

TEST DATA

	CLOCK TIME	SAMPLING TIME (min)	FLOWMETER RDG.	ORIFICE TEMP (°F)
START @	9:00	—	1.0	56
	9:10	10	0.95	55
	9:15	15	0.95	55
	9:25	25	0.90	54
	9:30	30	0.90	54
	9:35	35	0.90	55
	9:40	40	0.85	55
STOP @	9:45	45	0.85	55
		Total 45		Avg. 55

Galson Technical Services, Inc. Environmental Sciences Division

COMMENTS:

FIELD DATA CRITICAL ORIFICE

PLANT _____ RUN No. 6 AMBIENT TEMP. (°F) 40

LOCATION _____ CONTAMINANTS Formal BARO. PRESS. (In. Hg) 30.33

DATE 4/7/9 _____ OPERATOR [illegible]

Start: 10:05

CALIBRATION DATA

CALIBRATION RUN No.	BURETTE VOL. (cc)	ORIFICE TEMP. (°F)	TIME (sec)
PRE-TEST-1	200	56	14.30
2			14.32
3			14.28
Avg.			14.30

FLOW (l/min) 0.839

POST-TEST-1	200	56	14.54
2			14.62
3			14.50
Avg.			14.55

FLOW (l/min): 0.825

Stop 10:50.

Average Flow (l/min)	0.832

TEST DATA

CLOCK TIME	SAMPLING TIME (min)	FLOWMETER RDG.	ORIFICE TEMP (°F)
1005	5	10	52
10	10	10	52
15	15	10	50
20	20	10	50
25	25	10	50
30	30	10	50
35	35	10	52
40	40	10	52
45	45	10	54
1050	—	10	50
	Total 45		Avg. 51

Galson
Technical Services, Inc.
Environmental Sciences Division

COMMENTS:

FIELD DATA – CRITICAL ORIFICE

PLANT Georgia Pacific RUN No. #D7 AMBIENT TEMP. (°F) 60

LOCATION Boiler #3 CONTAMINANTS Formaldehyde BARO. PRESS. (In. Hg) 30.33

DATE 7-19-90 OPERATOR RP / RR

CALIBRATION DATA

Start: 11:11

CALIBRATION RUN No.	BURETTE VOL. (cc)	ORIFICE TEMP. (°F)	TIME (sec)
PRE-TEST-1	200	54	13.54
2			13.62
3			13.62
Avg.			13.59

FLOW (l/min): 0.883

POST-TEST-1	200	56	13.96
2			13.90
3			13.94
Avg.			13.93

FLOW (l/min): 0.861

Average Flow (l/min)	0.872

TEST DATA

CLOCK TIME	SAMPLING TIME (min)	~~FLOWMETER~~ ~~ROG~~ Orifice Temp (°F)	~~ORIFICE TEMP.~~ Flowmeter Rdg
11:11	0	50	10
16	5	50	10
21	10	52	10
26	15	54	10
31	20	54	10
36	25	54	10
41	30	54	10
46	35	52	9
51	40	52	9
11:56	45	54	9
	Total	52.6	Avg.

Galson
Technical Services, Inc.
Environmental Sciences Division

COMMENTS:

PLANT GEORGIA PACIFIC RUN No. 5 STACK DIMENSIONS 66" DIA.

LOCATION UNIT #3 PITOT ID 1 BARO. PRESS. (in.Hg.) 30.33

DATE 7/18/90 PITOT CF 0.84 OPERATOR KCHP

START @ 9:15

TRAVERSE POINT NUMBER	STACK ΔP In. H_2O	STACK TEMP (T_s) °F
B1	0.87	163
2	1.20	162
3	1.30	161
4	1.30	161
5	1.50	161
6	1.60	161
7	1.25	162
8	1.40	162
9	1.40	162
10	1.25	162
	$\sqrt{\Delta P}$ Avg.	Avg.

STATIC PRESSURE		
Traverse Pt.	B6	A5
Pus (In. H_2O)	-0.81	-0.69
Pstatic (In. H_2O)		
ORSAT		
% CO_2		
% O_2		
% CO		
MOISTURE		
T wet (°F)		
T dry (°F)		
%		

TRAVERSE POINT NUMBER	STACK ΔP In. H_2O	STACK TEMP (T_s) °F
A1	0.73	160
2	1.05	160
3	1.30	160
4	1.40	160
5	1.40	160
6	1.60	163
7	1.50	163
8	1.50	164
9	1.40	160
10	1.50	159
	$\sqrt{\Delta P}$ Avg.	Avg. 161

STOP @ 9:50

Galson Technical Services, Inc. Environmental Sciences Division

COMMENTS:

CYCLONIC FLOW DETERMINATION Run #7

Plant: Georgia Pacific Stack: Profile #3

7.18.90

Traverse Point No.	Velocity Head ΔP, inches H_2O	~~Degrees Deviation From Reference~~ Temp °F	Traverse Point No.	Velocity Head ΔP, inches H_2O	Degrees ~~Deviation From Reference~~ Temp °F
3 1	.65	167	A 1	.85	157°
2	.92	168	2	1.10	158°
3	1.05	169	3	1.35	158
4	1.30	166	4	1.40	158
5	1.40	165	5	1.25	158°
6	1.20	166	6	1.40	159°
7	1.50	166	7	1.45	160
8	1.55	166	8	1.30	161
9	1.45	167	9	1.30	161
10	1.60	166	10	1.50	161
Traverse point 1 Wake	66 -.68		A6 Wake -.58		
					163

Average |α| = _____

SUMMARY OF TEST DATA- BENZENE EMISSIONS

PLANT: GEORGIA PACIFIC STACK: WOOD-BOILER EXHAUST

		TEST #5	TEST #6	TEST #7
A.	STACK GAS FLOW RATE, DSCFM	60,186	58,950[a]	57,713
B.	BENZENE CONCENTRATION, PPM	1.5	1.7	0.3
C.	BENZENE EMISSION RATE, GM/HR $(A*B*M^{b}*60)/(10^{3}*35.3*24.04)$	500	550	9.6

[a] Based on data collected during Tests 5 and 7.

[b] Molecular weight of benzene = 78.1 gm/gm-mole.

FIELD DATA — CRITICAL ORIFICE

PLANT [illegible] RUN No. 5 AMBIENT TEMP. (°F) 60

LOCATION [illegible] CONTAMINANTS Benzene BARO. PRESS. (In. Hg) 30.33

DATE 7/17/90 OPERATOR RR/RP

CALIBRATION DATA

CALIBRATION RUN No.	BURETTE VOL. (cc)	ORIFICE TEMP. (°F)	TIME (sec)
PRE-TEST-1			
2			
3			
Avg.			

FLOW (l/min)

POST-TEST-1			
2			
3			
Avg.			

FLOW (l/min):

Average Flow (l/min)	

TEST DATA

	CLOCK TIME	SAMPLING TIME (min)	FLOWMETER RDG.	ORIFICE TEMP (°F)
START @	9:00			
STOP @	9:45			
		Total		Avg.

Galson
Technical Services, Inc.
Environmental Sciences Division

COMMENTS:

FIELD DATA — CRITICAL ORIFICE

PLANT Georgia Pacific | RUN No. 6 | AMBIENT TEMP. (°F) 60

LOCATION Boiler #3 | CONTAMINANTS Benzene | BARO. PRESS. (In. Hg) 30.33

DATE 7/13/90 | OPERATOR R.P/R.R

CALIBRATION DATA

CALIBRATION RUN No.	BURETTE VOL. (cc)	ORIFICE TEMP. (°F)	TIME (sec)
PRE-TEST-1			
2			
3			
Avg.			

FLOW (l/min)

POST-TEST-1			
2			
3			
Avg.			

FLOW (l/min):

Average Flow (l/min)	

TEST DATA

CLOCK TIME	SAMPLING TIME (min)	FLOWMETER RDG.	ORIFICE TEMP (°F)
1005			
1050			
	Total		Avg.

Galson
Technical Services, Inc.
Environmental Sciences Division

COMMENTS:

FIELD DATA — CRITICAL ORIFICE

PLANT Cincinnati Ferrous RUN No. #7 AMBIENT TEMP. (°F) 60

LOCATION Reactor #3 CONTAMINANTS Benzene BARO. PRESS. (In. Hg) 30.33

DATE 1-18-90 OPERATOR R.P./R.P.

CALIBRATION DATA

CALIBRATION RUN No.	BURETTE VOL. (cc)	ORIFICE TEMP. (°F)	TIME (sec)
PRE-TEST-1			
2			
3			
Avg.			

FLOW (l/min):

POST-TEST-1			
2			
3			
Avg.			

FLOW (l/min):

Average Flow (l/min)	

TEST DATA

CLOCK TIME	SAMPLING TIME (min)	FLOWMETER RDG.	ORIFICE TEMP (°F)
11:11			
11:86			
	Total		Avg.

Galson
Technical Services, Inc.
Environmental Sciences Division

COMMENTS:

Particulate and Metals (11) Emission Data

Source Test Report:
TAC (Georgia Pacific), Fort Bragg, CA
Galson Project#: S9-072.GP

Summary of Test Data: Particulate/Metals Emissions

	Run: #1	Run: #2	Run: #4
Number of Sampling Points:	20	20	20
Duration of the Run (θ), Minutes:	120	120	120
Sampling Nozzle Diameter, Inches:	0.213	0.213	0.213
Pitot Calibration Factor (C_p):	0.84	0.84	0.84
Meter Calibration Factor (γ):	1.004	1.004	1.004
Stack Diameter, Inches:	66	66	66
Ambient Air Temperature, °F:	65	65	70
Barometric Pressure (P_b), In. Hg:	30.37	30.37	30.31
Stack Gas Static Pressure in Flue, In. H_2O:	-0.19	-0.21	-0.22
Stack Gas Absolute Pressure (P_s), In. Hg:	30.36	30.35	30.29
Stack Gas Velocity Head, ($\sqrt{\Delta P}$):	0.947	0.877	1.242
Orifice Pressure Drop (ΔH), In. H_2O:	1.33	1.14	2.13
Volume Sampled (V_m), ft^3 (Meter Cond.):	70.39	65.47	89.43
Stack Gas Temperature (t_s), °F:	154	152	158
Impinger Outlet Temperature, °F:	67	63	67
Meter Temperature (t_m), °F:	72	69	67
Meter Vacuum, In. Hg:	3	4	12
Volume of Water Condensed (V_{lc}), ml:	552.8	511.8	779.1
Specific Gravity of Flue Gas (SG):	0.936	0.939	0.923
Flue Gas Composition:			
% CO_2	13.2	12.8	11.4
% O_2	7.9	8.2	9.9
% CO	0.0	0.1	0.0

Source Test Report:
TAC (Georgia Pacific), Fort Bragg, CA
Galson Project#: S9-072.GP

Sampling Data and Calculations: Particulate/Metals Emissions

	Run: #1	Run: #2	Run: #4
A. Stack Gas Cross Sectional Area (A_s), ft^2:	23.76	23.76	23.76
B. Volume Sampled (Meter Conditions), ft^3:	70.39	65.47	89.43
C. Volume Sampled (Std. Conditions), ft^3: [$B * \gamma * (T_{std}/P_{std}) * ((P_b + (\Delta H/13.6))/T_m)$]	71.43	66.73	91.61
D. Volume of Liquid Water Condensed, ml:	552.8	511.8	779.1
E. Vapor Volume (Std. Conditions) of Water, ft^3: [$D * 0.04714$]	26.06	24.13	36.73
F. Stack Gas Moisture Content, %: [$(E/(E + C)) * 100$]	26.73	25.82	28.62
G. Stack Gas Velocity, ft/min: [$4005 * \sqrt{\Delta P} * C_p * SQRT((T_s * P_{std})/(T_{std} * P_s * SG))$]	3,524	3,255	4,677
H. Stack Gas Flow Rate (Stack Cond.), ACFM: [$A * G$]	83,726	77,323	111,126
Stack Gas Flow Rate (Std. Cond. dry), SCFM: [$H * (1 - F/100) * (T_{std}/T_s) * (P_s/P_{std})$]	53,513	50,245	68,581

Standard Conditions: $T_{std} = 528$ °R ; $P_{std} = 29.92$ in. Hg

$= t_s + 460$; $T_m = t_m + 460$

Source Test Report:
TAC (Georgia Pacific), Fort Bragg, CA
Galson Project#: S9-072.GP

Sampling Data and Calculations: Particulate Emissions

	Run: #1	Run: #2	Run: #4
J. Particulate Quantity Collected, gm			
1. Solid Particulate	0.0939	0.0834	0.1617
K. Particulate Concentration, gr/ft^3 [J/C * (1543000/100000)]			
1. Solid Particulate	0.0203	0.0193	0.0272
L. Particulate Concentration (At 12% CO_2), gr/ft^3 [K * (12/%CO_2)]			
1. Solid Particulate	0.0184	0.0181	0.0287
M. Particulate Emission Rate, lb/hr [K * I * (132300/1000000)/(1543000/100000)]			
1. Solid Particulate	9.307	8.308	16.01

Sampling Data and Calculations: Particulate/Metals Emissions

	Run: #1	Run: #2	Run: #4
J. Metals Quantity Collected, mg			
Arsenic	0.067	0.073	0.017
Beryllium	< 0.001	< 0.001	< 0.001
Cadmium	< 0.001	< 0.001	0.002
Chromium	0.007	0.004	0.016
Copper	0.055	0.051	0.077
Lead	0.025	0.023	0.059
Manganese	0.32	0.1	0.22
Mercury	0.0015	0.0019	0.0024
Nickel	< 0.008	< 0.008	0.012
Selenium	< 0.01	< 0.01	< 0.01
Zinc	0.589	0.559	0.909

Source Test Report:
TAC (Georgia Pacific), Fort Bragg, CA
Galson Project#: S9-072.GP

Sampling Data and Calculations: Particulate/Metals Emissions

	Run: #1	Run: #2	Run: #4
K. Metals Concentration, mg/m³			
[J/C * (35.31/1)]			
Arsenic	0.033	0.039	0.007
Beryllium	< 0.0005	< 0.0005	< 0.0004
Cadmium	< 0.0005	< 0.0005	0.001
Chromium	0.003	0.002	0.006
Copper	0.027	0.027	0.030
Lead	0.012	0.012	0.023
Manganese	0.158	0.053	0.085
Mercury	0.0007	0.0010	0.0009
Nickel	< 0.004	< 0.004	0.005
Selenium	< 0.005	< 0.005	< 0.004
Zinc	0.291	0.296	0.350

Sampling Data and Calculations: Particulate/Metals Emissions

	Run: #1	Run: #2	Run: #4
L. Metals Concentration (At 12% CO_2), mg/m^3			
[K * (12/%CO_2)]			
Arsenic	0.030	0.036	0.007
Beryllium	< 0.0004	< 0.0005	< 0.0004
Cadmium	< 0.0004	< 0.0005	0.001
Chromium	0.003	0.002	0.006
Copper	0.025	0.025	0.031
Lead	0.011	0.011	0.024
Manganese	0.144	0.050	0.089
Mercury	0.0007	0.0009	0.0010
Nickel	< 0.004	< 0.004	0.005
Selenium	< 0.004	< 0.005	< 0.004
Zinc	0.265	0.277	0.369

Source Test Report:
TAC (Georgia Pacific), Fort Bragg, CA
Galson Project#: S9-072.GP

Sampling Data and Calculations: Particulate/Metals Emissions

	Run: #1	Run: #2	Run: #4
M. Metals Emission Rate, gm/hr			
[K * I * (60/1000)/(35.31/1)]			
Arsenic	3.01	3.30	0.764
Beryllium	< 0.045	< 0.045	< 0.045
Cadmium	< 0.045	< 0.045	0.090
Chromium	0.315	0.181	0.719
Copper	2.47	2.30	3.46
Lead	1.12	1.04	2.65
Manganese	14.4	4.52	9.88
Mercury	0.067	0.086	0.108
Nickel	< 0.360	< 0.361	0.539
Selenium	< 0.450	< 0.452	< 0.449
Zinc	26.2	25.3	43.8

Source Test Report:
TAC (Georgia Pacific), Fort Bragg, CA
Galson Project#: S9-072.GP

Isokinetic Variation Calculation

	Run: #1	Run: #2	Run: #4
Stack Gas Absolute Temperature (T_s), °R:	614	612	618
Volume of Liquid Water Condensed (V_{lc}), ml:	552.8	511.8	779.1
Meter Calibration Factor (γ):	1.004	1.004	1.004
Volume Sampled (Meter Cond.) (V_m), ft^3:	70.39	65.47	89.43
Meter Absolute Temperature (T_m), °R:	532	529	527
Meter Absolute Pressure (P_m), In. Hg: ($P_b + \Delta H / 13.6$)	30.47	30.45	30.47
Stack Gas Velocity (v_s), ft/min:	3,524	3,255	4,677
Stack Gas Absolute Pressure (P_s), In. Hg:	30.36	30.35	30.29
Cross-Sectional Area of Nozzle, (A_n), ft^2:	0.00025	0.00025	0.00025
Duration of the Run (θ), minutes:	120	120	120
Isokinetic Percentage (I), %: [1]	106.8	106.2	106.9

[1] Calculated from the Equation:

$$I = [T_s * 100 * ((K_3 * V_{lc}) + (V_m / T_m * \gamma * P_m))] / (\theta * v_s * P_s * A_n)$$

where $K_3 = 0.002669$

Source Test Report:
TAC (Georgia Pacific), Fort Bragg, CA
Galson Project#: S9-072.GP

Stack Gas Composition and Gas Density Calculations

	Run: #1		Run: #2		Run: #4	
	% Dry Basis	Wet Basis	% Dry Basis	Wet Basis	% Dry Basis	Wet Basis
CO_2	13.2	9.67	12.8	9.49	11.4	8.14
O_2	7.9	5.79	8.2	6.08	9.9	7.07
CO	0.0	0.00	0.1	0.07	0.0	0.00
N_2	78.9	57.81	78.9	58.53	78.7	56.18
H_2O	- - -	26.73	- - -	25.82	- - -	28.62
Molecular Weight[1]	- - -	27.11	- - -	27.18	- - -	26.72
Specific Gravity of Stack Gas[2]	- - -	0.936	- - -	0.939	- - -	0.923

1. Calculated from the equation:
   Molecular Weight = $0.44*(\%CO_2) + 0.32*(\%O_2) + 0.28*(\%N_2 + \%CO) + 0.18*(\%H_2O)$
2. Calculated from the equation:
   SG = Molecular Weight of Stack Gas / Molecular Weight of Air (28.95 gm/gm-mole)

Galson Technical Services

SAMPLE COLLECTION DATA

Comments:

Plant: GEORGIA PACIFIC
Location: UNIT #3
Date: 7/12/10
Run Number: #1 MM
Operator: KR/KK
Sample Box ID: NT
Meter Box ID: 002
Probe ID:
Filter #:

Meter Ø: 1.004
Meter ΔH@: 1.94
Pitot C.F.: 0.84
Assumed Moisture %: 25
Nozzle Diameter in.: 0.213
C Factor: 1.25
Ambient Temperature: 65
Barometric Pressure: 30.37
Silica Gel #:

Static Pressure:
Traverse Pt.: B8 B5
Pwake: 0.50 -0.44
Pstatic:

Water Collected:
Impingers, ml.: 520 (620-300)
Silica Gel, gms.: 32.8 552.8

START @ 10:27 Vi = 921.403

Traverse Point Number	Sampling Time min.	Stack Temp. (Ts) °F	Stack ΔP in. H2O	Orifice ΔH in. H2O	Meter Reading (Vm) ft3	Dry Gas Meter Temp. T in °F	Dry Gas Meter Temp. T out °F	Sample Box Temp. °F	Probe Temp. °F	Impinger Outlet °F	Pump Vac. in Hg.
B10	6	154	1.00	1.45	925.1	62	61	241	238	66	2
9	12	155	0.92	1.35	928.6	64	63	262	243	63	2
8	18	155	0.94	1.40	932.1	65	62	271	253	63	2
7	24	155	1.10	1.60	936.0	68	63	275	257	65	3
6	30	156	1.10	1.60	940.0	70	64	278	252	68	3
5	36	153	1.00	1.50	943.7	71	64	279	254	71	3
4	42	155	1.00	1.50	947.4	73	66	277	268	75	3
3	48	154	0.83	1.20	950.8	74	66	275	258	77	3
2	54	154	0.74	1.10	954.0	76	68	275	259	79	3
1	60	146	0.47	0.68	956.635	78	70	275	249	83	2
	STOP @	11:27									
Averages											

Galson Technical Services

SAMPLE COLLECTION DATA

Comments: POST TEST LEAK RATE = 0.016 CFM @ 7 in Hg

START @ 11:51

Plant: GEORGIA PACIFIC
Location: [illegible]
Date: 1/12/10
Run Number: #1 MM
Operator: NN/RP
Sample Box ID: NT
Meter Box ID: 5002
Probe ID:
Filter #:

Meter δ: 1.009
Meter ΔH@: 1.941
Pitot C.F.: 0.84
Assumed Moisture %: 25
Nozzle Diameter in.: 0.213
C Factor: 1.25
Ambient Temperature: 65
Barometric Pressure: 30.37
Silica Gel #:

Vi = 956.637

Static Pressure:
Traverse Pt. A4 A7
Pwake -0.41 -0.52
Pstatic

Water Collected:
Impingers, ml.
Silica Gel, gms.

Traverse Point Number	Sampling Time min.	Stack Temp. (Ts) °F	Stack ΔP in. H2O	Orifice ΔH in. H2O	Meter Reading (Vm) ft3	Dry Gas Meter Temp. T in °F	Dry Gas Meter Temp. T out °F	Sample Box Temp. °F	Probe Temp. °F	Impinger Outlet °F	Pump Vac. in Hg.
A1	0	147	0.48	0.70	959.2	73	72	259	260	66	2
2	8	154	0.75	1.10	962.4	75	73	270	257	69	3
3	16	154	0.78	1.15	965.7	77	73	272	253	68	3
4	24	155	1.10	1.60	969.5	78	74	276	248	66	4
5	32	154	0.90	1.30	973.1	79	74	276	240	65	4
6	36	153	1.10	1.60	976.9	80	74	276	237	67	5
7	42	156	1.10	1.60	980.8	81	75	278	240	69	5
8	46	156	0.94	1.40	984.5	81	75	278	246	71	5
9	54	158	0.97	1.40	988.1	82	76	280	256	74	5
10	60	158	0.92	1.35	991.795	83	77	276	240	74	6
STOP @		12:51									
Averages		154	0.947	1.33	70.39	72					

SAMPLE COLLECTION DATA

Galson Technical Services

Comments:

Plant Chevron / Pacific
Location Bay 113
Date 1.12.90
Run Number #2 10:00
Operator [illegible]
Sample Box ID
Meter Box ID 002
Probe ID
Filter #

Meter δ 1.024
Meter ΔH@ 1.94
Pitot C.F. .84
Assumed Moisture % 25
Nozzle Diameter in. .215
C Factor 1.25
Ambient Temperature 70
Barometric Pressure 30.37
Silica Gel #

Static Pressure:
Traverse Pt. A3
Pwake -.47
Pstatic

Water Collected:
Impingers, ml. 760-300 460
Silica Gel, gms. 322+196 518

511.8

Start 2:52 Vt = 112.826

Traverse Point Number	Sampling Time min.	Stack Temp. (Ts) °F	Stack ΔP in. H2O	Orifice ΔH in. H2O	Meter Reading (Vm) ft3	Dry Gas Meter Temp. T in °F	Dry Gas Meter Temp. T out °F	Sample Box Temp. °F	Probe Temp. °F	Impinger Outlet °F	Pump Vac. in Hg.
1	6	151	.64	.94		67	66	226	251	59	2
2	12	155	.66	.98	006.3	67	67	231	248	62	2
3	18	153	.80	1.2	009.4	69	67	233	240	60	3
4	24	153	.83	1.25	012.7	70	67	236	233	58	3
5	30	152	.92	1.35		71	67	236	233	57	3
6	36	153	1.1	1.62	016.7	71	67	236	230	59	4
7	42	153	.82	1.20	013.5	73	68	249	249	63	4
8	48	153	.65	.96	016.4	74	69	250	253	63	4
9	54	153	.78	1.15	020.1	75	70	227	232	56	4
10	60	154	.80	1.20		75	70	227	241	56	4
	Stop	352			026.42						
Averages											

Galson Technical Services

SAMPLE COLLECTION DATA

4/2

Comments:

Plant
Location
Date
Run Number 2
Operator
Sample Box ID
Meter Box ID
Probe ID
Filter #

Meter δ 1.004
Meter ΔH@ 1.94
Pitot C.F. .84
Assumed Moisture % 25
Nozzle Diameter in. .213
C Factor 1.25
Ambient Temperature 70
Barometric Pressure 30.37
Silica Gel #

Static Pressure:
Traverse Pt. B4
Pwake -.37
Pstatic

Water Collected:
Impingers, ml.
Silica Gel, gms.

Traverse Point Number	Sampling Time min.	Stack Temp. (Ts) °F	Stack ΔP In. H2O	Orifice ΔH In. H2O	Meter Reading (Vm) ft3	Dry Gas Meter Temp. T in °F	Dry Gas Meter Temp. T out °F	Sample Box Temp. °F	Probe Temp. °F	Impinger Outlet °F	Pump Vac. In Hg.
B1	6	154	.78	1.15		65	65	230	253	65	3
2	12	152	.72	1.05	029.9	68	66	231	257	65	3
3	18	151	.78	1.15	032.9	71	67	229	253	64	4
4	24	151	.72	1.05	036.1	71	66	230	262	65	4
5	30	150	.68	1.30	039.4	71	66	229	256	69	5
6	36	150	.83	1.25	042.7	73	67	231	264	74	4
7	42	152	.79	1.15	046.1	74	68	230	267	80	5
8	48	150	.78	1.0	049.4	74	68	228	265	76	5
9	54	148	.77	1.12	052.5	74	68	231	264	76	5
10	60	146	.53	.79	055.7	75	69	231	267	76	
		516		UF	058.245						
Averages		152	0.876	1.14	65.47		69				

Galson Technical Services

SAMPLE COLLECTION DATA

Comments:

Plant
Location
Date
Run Number
Operator
Sample Box ID
Meter Box ID 002
Probe ID
Filter #

Meter Ø 1.009
Meter ΔH@ 1.94
Pitot C.F.
Assumed Moisture % 25
Nozzle Diameter in. .213
C Factor 1.35
Ambient Temperature 70
Barometric Pressure 30.31
Silica Gel #

Static Pressure:
Traverse Pt. C7
Pwake -0.66
Pstatic

Water Collected:
1018-300
Impingers, ml. 718
Silica Gel, gms. 61.1

Traverse Point Number	Sampling Time min.	Stack Temp. (Ts) °F	Stack ΔP In. H2O	Orifice ΔH In. H2O	Meter Reading (Vm) ft3	Dry Gas Meter Temp. T in °F	Dry Gas Meter Temp. T out °F	Sample Box Temp. °F	Probe Temp. °F	Impinger Outlet °F	Pump Vac. In Hg.
D			1.10	1.50	072.443	60	59	250	244	[illegible]	5
	12	[illegible]	[illegible]	1.90		60	60	250	257	61	7
	16	[illegible]	[illegible]	[illegible]		[illegible]	60	[illegible]	[illegible]	62	8
	24	[illegible]	1.70	[illegible]		63	60	251	253	59	7
	30	[illegible]	1.40	[illegible]		63	60	251	[illegible]	61	7
	36	158	[illegible]	2.20		65	61	253	257	64	11
	42	156	1.90	2.60		63	59	252	258	64	12
	48	156	2.0	2.70		68	63	254	257	67	14
	54	155	1.70	2.30		70	64	262	257	68	13
	60	[illegible]	[illegible]	[illegible]		72	66	265	247	67	13
					[illegible]						
Averages											

7 Pit

SAMPLE COLLECTION DATA

Galson Technical Services

Comments:

Plant
Location
Date 2/16/
Run Number
Operator
Sample Box ID
Meter Box ID 002
Probe ID
Filter #

Meter δ
Meter ΔH@
Pitot C.F.
Assumed Moisture %
Nozzle Diameter in. .213
C Factor
Ambient Temperature 70
Barometric Pressure
Silica Gel #

Static Pressure:
Traverse Pt. A6
Pwake
Pstatic

Water Collected:
Impingers, ml.
Silica Gel, gms.

Traverse Point Number	Sampling Time min.	Stack Temp. (Ts) °F	Stack ΔP in. H2O	Orifice ΔH in. H2O	Meter Reading (Vm) ft3	Dry Gas Meter Temp. T in °F	Dry Gas Meter Temp. T out °F	Sample Box Temp. °F	Probe Temp. °F	Impinger Outlet °F	Pump Vac. in Hg.
	66		1.0	2.20	122.232	66	65	262	260	65	15
	72	157	2.0	2.70		70	67	265	270	67	19
	78	162	2.0	2.70		71	67	273	270	67	20
	84	161	1.50	2.60		67	66	253	269	66	11
	90	158	1.60	2.20		68	66	269	269	66	12
	96	157	1.80	2.50		72	67	273	267	66	15
	102	160	1.90	1.35		73	69	270	267	73	13
	108	161	1.60	2.20		77	70	271	267	73	16
	114	161	1.2	1.65		83	73	272	268	76	13
		163	.84	1.15		92	74	272	269	77	11
					166.83						
Averages		158	1.24	2.13	89.43	67					

Summary of Test Data: Condensable Particulate Emissions

	Run: #3
Number of Sampling Points:	0
Duration of the Run (θ), Minutes:	40
Sampling Nozzle Diameter, Inches:	0.189
Pitot Calibration Factor (C_p):	0.84
Meter Calibration Factor (γ):	1.004
Stack Diameter, Inches:	66
Ambient Air Temperature, °F:	65
Barometric Pressure (P_b), In. Hg:	30.37
Stack Gas Static Pressure in Flue, In. H_2O:	-0.21
Stack Gas Absolute Pressure (P_s), In. Hg:	30.35
Stack Gas Velocity Head, ($\sqrt{\Delta P}$):	0.984
Orifice Pressure Drop (ΔH), In. H_2O:	0.82
Volume Sampled (V_m), ft^3 (Meter Cond.):	18.63
Stack Gas Temperature (t_s), °F:	154
Impinger Outlet Temperature, °F:	54
Meter Temperature (t_m), °F:	62
Meter Vacuum, In. Hg:	11
Volume of Water Condensed (V_{lc}), ml:	154.2
Specific Gravity of Flue Gas (SG):	0.933
Flue Gas Composition:	
% CO_2	13.0
% O_2	7.9
% CO	0.2

Sampling Data and Calculations: Condensable Particulate Emissions

	Run: #3
A. Stack Gas Cross Sectional Area (A_s), ft^2:	23.76
B. Volume Sampled (Meter Conditions), ft^3:	18.63
C. Volume Sampled (Std. Conditions), ft^3: [$B * \gamma * (T_{std}/P_{std}) * ((P_b + (\Delta H/13.6))/T_m)$]	19.24
D. Volume of Liquid Water Condensed, ml:	154.2 [1]
E. Vapor Volume (Std. Conditions) of Water, ft^3: [D * 0.04714]	7.27
F. Stack Gas Moisture Content, %: [(E/(E + C)) * 100]	27.42 [2]
G. Stack Gas Velocity, ft/min: [$4005 * \sqrt{\Delta P} * C_p * SQRT((T_s * P_{std})/(T_{std} * P_s * SG))$]	3,672
H. Stack Gas Flow Rate (Stack Cond.), ACFM: [A * G]	87,230
I. Stack Gas Flow Rate (Std. Cond. dry), SCFM: [$H * (1 - F/100) * (T_{std}/T_s) * (P_s/P_{std})$]	55,241

Standard Conditions: $T_{std} = 528$ °R ; $P_{std} = 29.92$ in. Hg

$T_s = t_s + 460$; $T_m = t_m + 460$

1. Liquid volume is back-calculated assuming saturated conditions.
2. Saturation moisture content, based on stack gas temperature and pressure.

Sampling Data and Calculations: Condensable Particulate Emissions

	Run: #3
J. Particulate Quantity Collected, mg	
Condensable Particulate	14.2
K. Particulate Concentration, gr/ft^3 [J/C * (1543/100000)]	
Condensable Particulate	0.0114
L. Particulate Concentration (At 12% CO_2), gr/ft^3 [K * (12/%CO_2)]	
Condensable Particulate	0.0105
M. Particulate Emission Rate, lb/hr [K * I * (132.3/1000000)/(1543/100000)]	
Condensable Particulate	5.39

Isokinetic Variation Calculation

	Run: #3
Stack Gas Absolute Temperature (T_s), °R:	614
Volume of Liquid Water Condensed (V_{lc}), ml:	154.2
Meter Calibration Factor (γ):	1.004
Volume Sampled (Meter Cond.) (V_m), ft^3:	18.63
Meter Absolute Temperature (T_m), °R:	522
Meter Absolute Pressure (P_m), In. Hg: ($P_b + \Delta H / 13.6$)	30.43
Stack Gas Velocity (v_s), ft/min:	3,672
Stack Gas Absolute Pressure (P_s), In. Hg:	30.35
Cross-Sectional Area of Nozzle, (A_n), ft^2:	0.00019
Duration of the Run (θ), minutes:	40
Isokinetic Percentage (I), %: [1]	106.2

.. Calculated from the Equation:

$$I = [T_s * 100 * ((K_3 * V_{lc}) + (V_m / T_m * \gamma * P_m))] / (\theta * v_s * P_s * A_n)$$

where $K_3 = 0.002669$

Stack Gas Composition and Gas Density Calculations

	Run: #3					
	% Dry Basis	Wet Basis	% Dry Basis	Wet Basis	% Dry Basis	Wet Basis
CO_2	13.0	9.44				
O_2	7.9	5.73				
CO	0.2	0.17				
N_2	78.9	57.24				
H_2O	- - -	27.42				
Molecular Weight[1]	- - -	27.00				
Specific Gravity of Stack Gas[2]	- - -	0.933				

1. Calculated from the equation:
   Molecular Weight = $0.44*(\%CO_2) + 0.32*(\%O_2) + 0.28*(\%N_2 + \%CO) + 0.18*(\%H_2O)$
2. Calculated from the equation:
   SG = Molecular Weight of Stack Gas / Molecular Weight of Air (28.95 gm/gm-mole)

Galson Technical Services

SAMPLE COLLECTION DATA 12

Comments: Condensable Particulate and Crystalline Silica

Plant Georgia Pacific
Location Kraft #3
Date 7.13.98
Run Number #3
Operator K. Pine
Sample Box ID
Meter Box ID 002
Probe ID
Filter #

Meter Ø 1.084
Meter ΔH@ 1.94
Pitot C.F. .84
Assumed Moisture % 25
Nozzle Diameter in. .180
C Factor 2.25
Ambient Temperature 55
Barometric Pressure 30.37
Silica Gel #

Static Pressure:
Traverse Pt. B4
Pwake -.42
Pstatic

Water Collected:
Impingers, ml. ?
Silica Gel, gms. 41.8

Start 8:30 Vt = 058.089

Traverse Point Number	Sampling Time min.	Stack Temp. (Ts) °F	Stack ΔP In. H2O	Orifice ΔH In. H2O	Meter Reading (Vm) ft3	Dry Gas Meter Temp. T in °F	Dry Gas Meter Temp. T out °F	Sample Box Temp. °F	Probe Temp. °F	Impinger Outlet °F	Pump Vac. In Hg.
B1		148	.58	.47		64	63	209	258	53	6
2	1	152	.72	.68		60	60	219	254	52	14
3		152	.76	.64	60.4	60	60	223	253	53	17
4		154	.84	.705		60	60	229	246	52	14
5		154	1.1	.92	62.3	61	60	230	244	52	15
		152	1.0	.84	63.2	61	60	228	243	52	14
7		154	1.1	.92	64.2	62	60	232	229	52	15
8		153	1.1	.92	65.1	63	60	230	231	54	16
9		156	1.0	.84		63	60	230	223	56	10
10		154	1.2	1.0	67.2	64	61	220	229	59	17
				VF	067.77						
Averages											

Galson Technical Services

SAMPLE COLLECTION DATA

12

Comments: Crushable Particulate Matter + Crystalline Silica

Plant: C-/P.
Location:
Date: 1-13-90
Run Number: #3 CS
Operator: K.P/M.L.
Sample Box ID:
Meter Box ID: 002
Probe ID:
Filter #:

Meter Ø: 1.01
Meter ΔH@:
Pitot C.F.: .84
Assumed Moisture %: 3.5
Nozzle Diameter In.: .189
C Factor: 2.25
Ambient Temperature: 75°
Barometric Pressure:
Silica Gel #:

Static Pressure:
Traverse Pt. A-8
Pwake: .51
Pstatic:

Water Collected:
Impingers, ml.:
Silica Gel, grns.:

Start: 9:00 (067.777 = VI)

Traverse Point Number	Sampling Time min.	Stack Temp. (Ts) °F	Stack ΔP In. H2O	Orifice ΔH In. H2O	Meter Reading (Vm) ft3	Dry Gas Meter Temp. T In °F	Dry Gas Meter Temp. T out °F	Sample Box Temp. °F	Probe Temp. °F	Impinger Outlet °F	Pump Vac. In Hg.
1	2	152	.68	.58		66	61	171	124	62	5
2	4	157	1.1	.94		62	60	192	178	60	9
3	6	155	1.1	.94	69.9	63	60	208	183	60	10
4	8	155	1.2	1.0	70.9	62	64	209	192	61	12
5	10	156	1.2	1.0	71.8	64	61	205	196	63	13
	12	154	1.1	.94	072.8	64	61	208	217	63	12
	14	157	.98	.80		65	61	227	218	65	12
	16	154	.95	.79	074.9	66	61	234	217	65	10
	18	156	.85	.72	075.8	66	62	240	219	65	10
	20	154	1.0	.84		66	62	244	213	62	11
1 9	20			VF=	077.315						
Averages											

Particulate Emission Data (11/90)

Summary of Test Data: Particulate Emissions (11/90)

	Run: #4N
umber of Sampling Points:	20
Duration of the Run (θ), Minutes:	60
umpling Nozzle Diameter, Inches:	0.213
itot Calibration Factor (C_p):	0.84
Meter Calibration Factor (γ):	1.008
ack Diameter, Inches:	66
mbient Air Temperature, °F:	70
arometric Pressure (P_b), In. Hg:	30.17
ack Gas Static Pressure in Flue, In. H_2O:	-0.16
tack Gas Absolute Pressure (P_s), In. Hg:	30.16
ack Gas Velocity Head, ($\sqrt{\Delta P}$):	1.134
rifice Pressure Drop (ΔH), In. H_2O:	1.70
olume Sampled (V_m), ft^3 (Meter Cond.):	39.75
ack Gas Temperature (t_s), °F:	155
pinger Outlet Temperature, °F:	60
Meter Temperature (t_m), °F:	68
eter Vacuum, In. Hg:	4
olume of Water Condensed (V_{lc}), ml:	337.9
pecific Gravity of Flue Gas (SG):	0.922
lue Gas Composition:	
CO_2	10.7
% O_2	9.9
% CO	0.1

Sampling Data and Calculations: Particulate Emissions (11/90)

	Run: #4N
A. Stack Gas Cross Sectional Area (A_s), ft^2:	23.76
B. Volume Sampled (Meter Conditions), ft^3:	39.75
C. Volume Sampled (Std. Conditions), ft^3: [$B * \gamma * (T_{std}/P_{std}) * ((P_b + (\Delta H/13.6))/T_m)$]	40.55
D. Volume of Liquid Water Condensed, ml:	337.9
E. Vapor Volume (Std. Conditions) of Water, ft^3: [$D * 0.04714$]	15.93
F. Stack Gas Moisture Content, %: [$(E/(E + C)) * 100$]	28.20
G. Stack Gas Velocity, ft/min: [$4005 * \sqrt{\Delta P} * C_p * SQRT((T_s * P_{std})/(T_{std} * P_s * SG))$]	4,272
H. Stack Gas Flow Rate (Stack Cond.), ACFM: [$A * G$]	101,493
I. Stack Gas Flow Rate (Std. Cond. dry), SCFM: [$H * (1 - F/100) * (T_{std}/T_s) * (P_s/P_{std})$]	63,013

Standard Conditions: $T_{std} = 528$ °R ; $P_{std} = 29.92$ in. Hg

$T_s = t_s + 460$; $T_m = t_m + 460$

Sampling Data and Calculations: Particulate Emissions (11/90)

	Run: #4 N
J. Particulate Quantity Collected, gm	
1. Solid Particulate	0.0622
2. Conden. Particulate	0.002
Total Particulate	0.0642
K. Particulate Concentration, gr/ft^3 [J/C * (1543000/100000)]	
1. Solid Particulate	0.0237
2. Conden. Particulate	0.0008
Total Particulate	0.0244
L. Particulate Concentration (At 12% CO_2), gr/ft^3 [K * (12/%CO_2)]	
1. Solid Particulate	0.0265
2. Conden. Particulate	0.0009
Total Particulate	0.0274
M. Particulate Emission Rate, lb/hr [K * I * (132300/1000000)/(1543000/100000)]	
1. Solid Particulate	12.8
2. Conden. Particulate	0.41
Total Particulate	13.2

Isokinetic Variation Calculation

	Run: #4N
Stack Gas Absolute Temperature (T_s), °R:	615
Volume of Liquid Water Condensed (V_{lc}), ml:	337.9
Meter Calibration Factor (γ):	1.008
Volume Sampled (Meter Cond.) (V_m), ft^3:	39.75
Meter Absolute Temperature (T_m), °R:	528
Meter Absolute Pressure (P_m), In. Hg: ($P_b + \Delta H / 13.6$)	30.30
Stack Gas Velocity (v_s), ft/min:	4,272
Stack Gas Absolute Pressure (P_s), In. Hg:	30.16
Cross-Sectional Area of Nozzle, (A_n), ft^2:	0.00025
Duration of the Run (θ), minutes:	60
Isokinetic Percentage (I), %: [1]	103.0

[1]. Calculated from the Equation:

$$I = [T_s * 100 * ((K_3 * V_{lc}) + (V_m / T_m * \gamma * P_m))] / (\theta * v_s * P_s * A_n)$$

where $K_3 = 0.002669$

Stack Gas Composition and Gas Density Calculations

	Run: #4 N					
	% Dry Basis	% Wet Basis	% Dry Basis	% Wet Basis	% Dry Basis	% Wet Basis
CO_2	10.7	7.68				
O_2	9.9	7.11				
CO	0.1	0.04				
N_2	79.3	56.97				
H_2O	- - -	28.20				
Molecular Weight[1]	- - -	26.69				
Specific Gravity of Stack Gas[2]	- - -	0.922				

1. Calculated from the equation:
   Molecular Weight = $0.44*(\%CO_2) + 0.32*(\%O_2) + 0.28*(\%N_2 + \%CO) + 0.18*(\%H_2O)$
2. Calculated from the equation:
   SG = Molecular Weight of Stack Gas / Molecular Weight of Air (28.95 gm/gm-mole)

Galson Technical Services

Comments:

SAMPLE COLLECTION DATA

1/2

Plant: FLORIDA PACIFIC
Location: [illegible]
Date: 11/4/[illegible]
Run Number: [illegible]N PROPORTIONAL
Operator: [illegible]
Sample Box ID: NT
Meter Box ID: 002
Probe ID:
Filter #:

Meter δ:
Meter ΔH@: 1.88
Pitot C.F.: [illegible]
Assumed Moisture %: 26-28
Nozzle Diameter in.: 0.213
C Factor: 1.55/1.4/1.5
Ambient Temperature: 70
Barometric Pressure: 30.17
Silica Gel #:

Static Pressure:
Traverse Pt. B7 B2
Pwake -0.65 -0.45
Pstatic

Water Collected:
518-200 = 318
Impingers, ml. 318 (337)
Silica Gel, gms. 19.9

START 1:50 Vi = 705.360

Traverse Point Number	Sampling Time min.	Stack Temp. (Ts) °F	Stack ΔP in. H2O	Orifice ΔH in. H2O	Meter Reading (Vm) ft3	Dry Gas Meter Temp. T in °F	Dry Gas Meter Temp. T out °F	Sample Box Temp. °F	Probe Temp. °F	Impinger Outlet °F	Pump Vac. in Hg.
B10	3	156	1.50	2.00	707.5	66	66	233	244	63	3
9	6	155	1.40	1.85	709.6	67	67	240	245	60	3
8	9	156	1.40	1.85	711.7	68	67	242	246	59	3
7	12	155	1.40	1.85	713.7	69	67	251	249	60	4
6	15	156	1.50	2.00	715.9	71	67	254	245	62	4
5	18	156	1.30	1.70		72	68	254	250	64	4
4	21	156	1.30	1.70	719.9	72	67	253	248	63	4
* 3	24	158	1.30	1.60	721.8	72	67	251	249	62	4
2	27	155	1.20	1.60	723.7	72	67	254	248	62	4
1	30	154	0.82	1.10	725.369	72	67	254		61	3
STOP	2:20										
Averages											