Note: This is a reference cited in *AP 42, Compilation of Air Pollutant Emission Factors, Volume I Stationary Point and Area Sources.* AP42 is located on the EPA web site at www.epa.gov/ttn/chief/ap42/

The file name refers to the reference number, the AP42 chapter and section. The file name "ref02_c01s02.pdf" would mean the reference is from AP42 chapter 1 section 2. The reference may be from a previous version of the section and no longer cited. The primary source should always be checked.

Chap 4
Ref 5

AP42 Section 1.2
4/93

Reference 13

WEST CHESTER STATE COLLEGE
WEST CHESTER, PENNSYLVANIA

PROCESS DESCRIPTION

West Chester State College operates three coal-fired water-tube boilers fired with Buckwheat No. 3 anthracite coal for space-heating, hot-water heating and air conditioning at its West Chester facility. Stack Test Nos. 0380 A and D were performed in the breeching of Boiler No. 1; Test Nos. 0380 B and E in the breeching of Boiler No. 3; and Test Nos. 0380 C and F in the breeching of Boiler No. 4.

Boiler No. 1 is a Keeler CP boiler with an Illinois chain grate stoker having a maximum load of 34,500 lbs. of steam per hour. Boilers Nos. 3 and 4 are also Keeler CP boilers but with Williamson traveling grate stokers. Maximum load for each of these units is 23,390 and 39,900 pounds of steam per hour respectively.

Coal, from an overhead bunker, is gravity fed through a weigh scale into the front feed hopper for the unit requiring coal. A bed of coal is leveled onto the traveling grate to a desired depth depending on the steam demand. The coal is ignited and burnt on the grate as it travels towards the rear of the unit. The resulting flyash is discharged at the end of the grate into the ash pit for manual removal.

Combustion air is supplied by a forced draft fan to the underside of the traveling grate. The boiler effluent makes several passes within the unit to heat the boiler feedwater. The flue gases then enter a Buell mechanical collector prior to entering a common breeching and finally exhausting to the atmosphere through a 200 foot stack. A sketch of the boiler layout is shown on Figure I.

WEST CHESTER STATE COLLEGE
WEST CHESTER, PA

FIGURE I

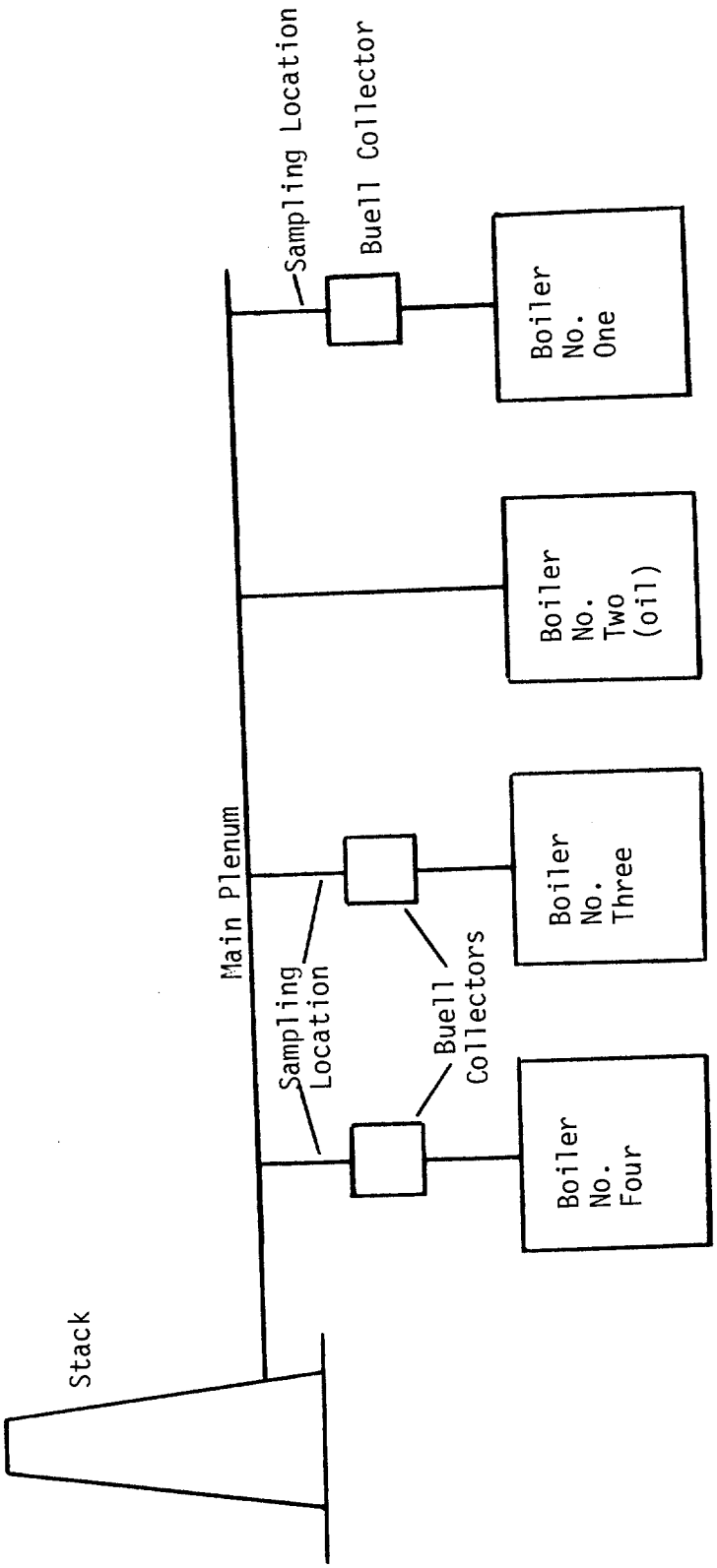

Test No. 0380 A

SAMPLING APPARATUS

Date 2/4/80

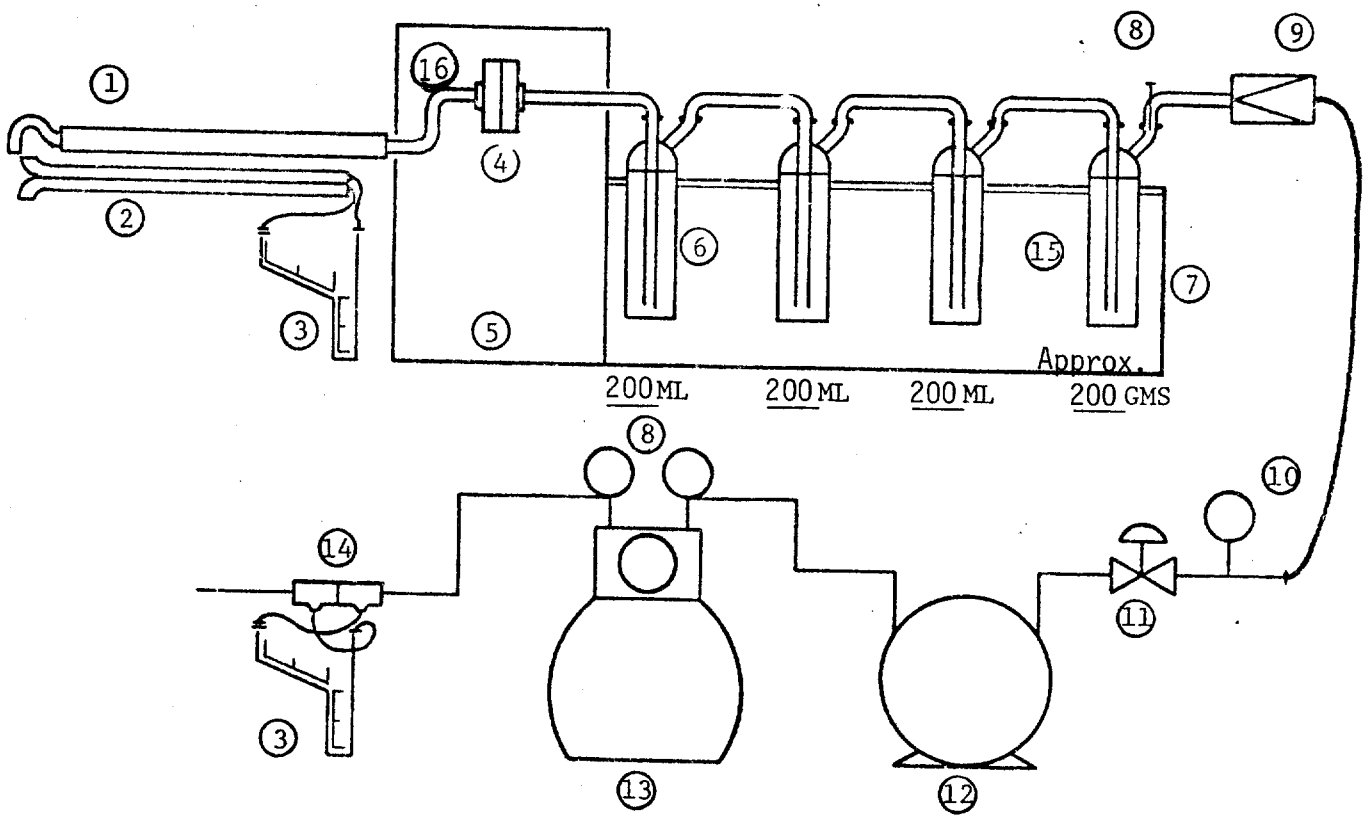

1. Heated Sample Probe
2. "S" Type Pitot Tube
3. Inclined Manometer
4. 5 Inch Dia. Glass Fiber Filter
5. Heated Sample Box
6. Impinger
7. Ice Bath Container
8. Thermocouple
9. Check Valve
10. Vacuum Guage
11. Valves To Control Gas Flow Rate
12. Leak Free Pump
13. Dry Gas Meter
14. Orifice Meter
15. Silica Gel
16. Heated Flexible Tubing

Impinger Solution: Distilled Water

Test No. 0380 D

SAMPLING APPARATUS

Date 2/5/80

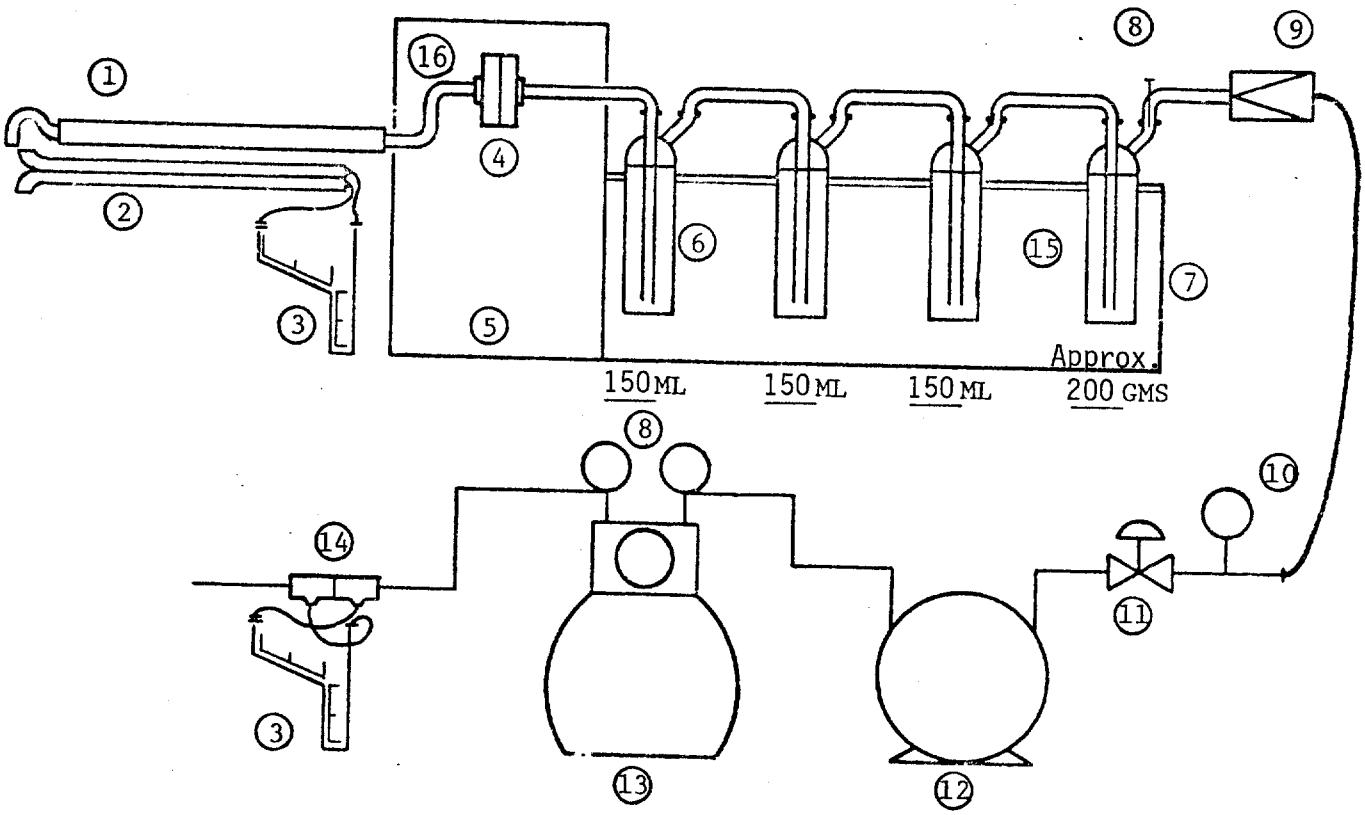

1. Heated Sample Probe
2. "S" Type Pitot Tube
3. Inclined Manometer
4. 5 Inch Dia. Glass Fiber Filter
5. Heated Sample Box
6. Impinger
7. Ice Bath Container
8. Thermocouple
9. Check Valve
10. Vacuum Guage
11. Valves To Control Gas Flow Rate
12. Leak Free Pump
13. Dry Gas Meter
14. Orifice Meter
15. Silica Gel
16. Heated Flexible Tubing

Impinger Solution: Distilled Water

Test No. 0380 B

SAMPLING APPARATUS

Date 2/4/80

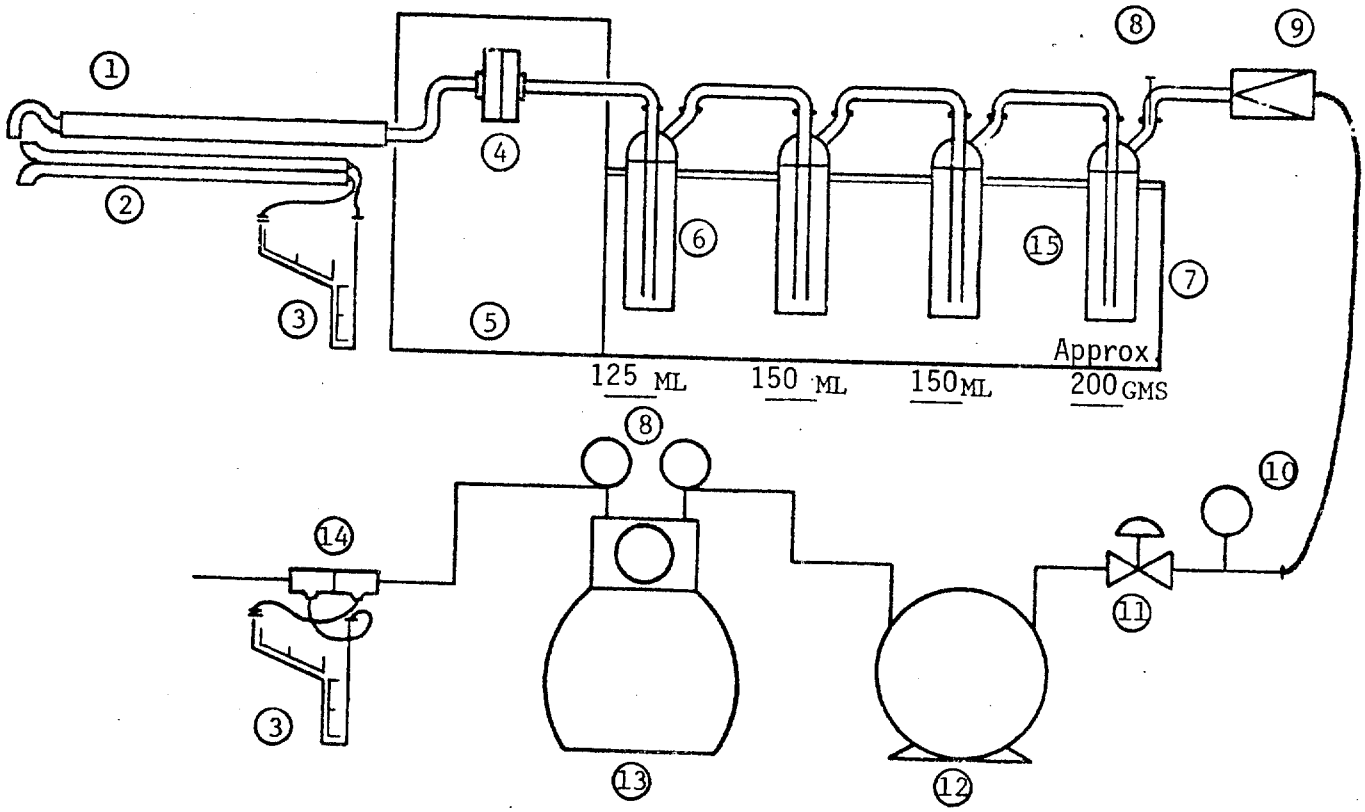

1. Heated Sample Probe
2. "S" Type Pitot Tube
3. Inclined Manometer
4. 5 Inch Dia. Glass Fiber Filter
5. Heated Sample Box
6. Impinger
7. Ice Bath Container
8. Thermocouple
9. Check Valve
10. Vacuum Guage
11. Valves To Control Gas Flow Rate
12. Leak Free Pump
13. Dry Gas Meter
14. Orifice Meter
15. Silica Gel

Impinger Solution: Distilled Water

Test No. 0380 C, E, F

SAMPLING APPARATUS

Date 2/4 & 5/80

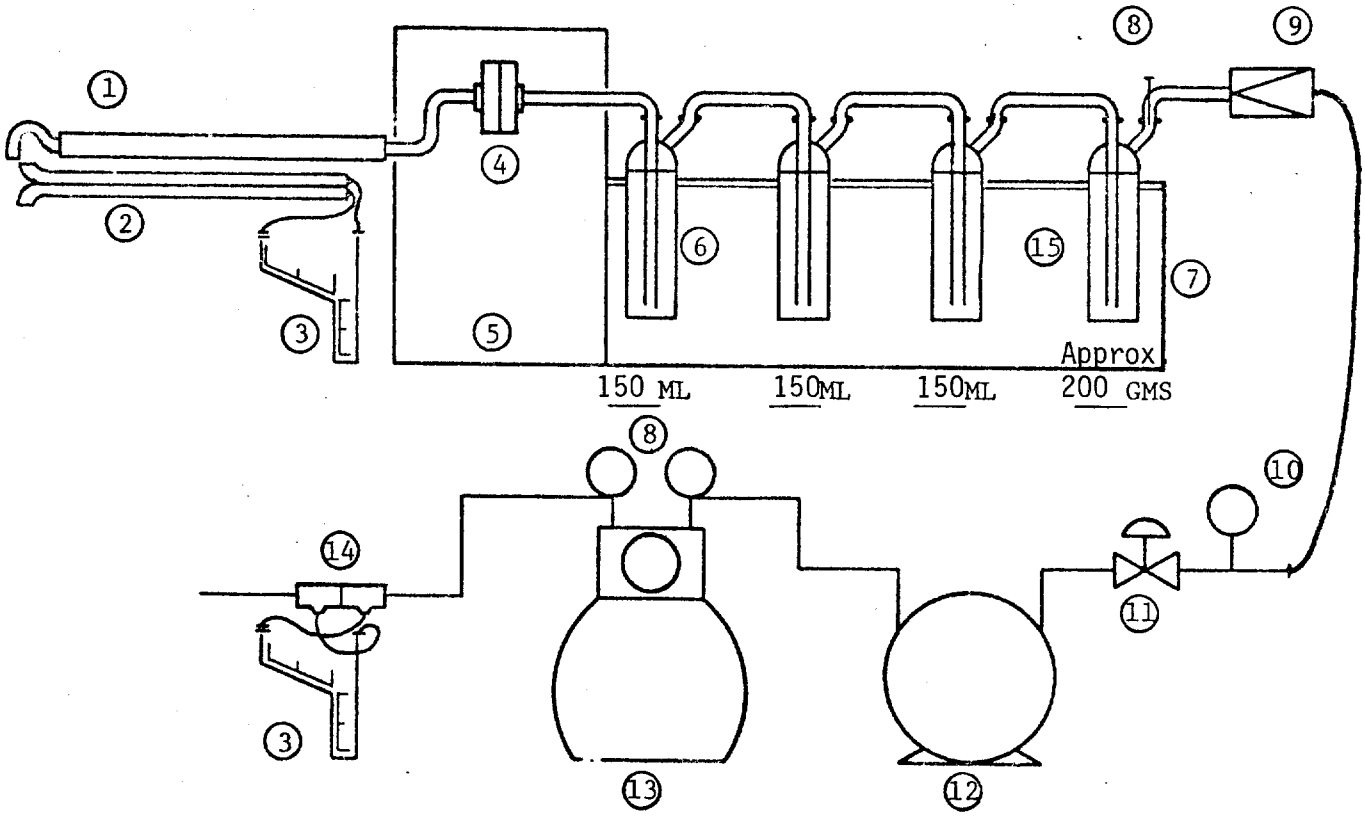

1. Heated Sample Probe
2. "S" Type Pitot Tube
3. Inclined Manometer
4. 5 Inch Dia. Glass Fiber Filter
5. Heated Sample Box
6. Impinger
7. Ice Bath Container
8. Thermocouple
9. Check Valve
10. Vacuum Guage
11. Valves To Control Gas Flow Rate
12. Leak Free Pump
13. Dry Gas Meter
14. Orifice Meter
15. Silica Gel

Impinger Solution: Distilled Water

HAP - 5686

COMMONWEALTH OF PENNSYLVANIA
DEPARTMENT OF HEALTH
AIR POLLUTION CONTROL

TEST NO. 0380 A, D

GAS VOLUME DATA
Preliminary Traverse

NAME OF FIRM

DATE

West Chester State College, West Chester, PA — 2/4/80

SAMPLE STATION

Sampling ports located in duct 2 feet downstream of Buell Mechanical Collector (Boiler No. 1)

TIME	POINT	V. H.	T °F.	VEL FT/SEC
12:25 PM	A-12	0.02	514	12.8
	11	0.02	515	12.8
	10	0.02	519	12.8
	9	0.02	520	12.8
	8	0.02	520	12.8
	7	0.02	512	12.8
	6	0.02	512	12.8
	5	0.02	509	12.8
	4	0.02	510	12.8
	3	0.02	512	12.8
	2	0.02	512	12.8
	1	0.03	513	15.7
	1	0.03	508	15.6
	2	0.02	512	12.8
	3	0.02	511	12.8
	4	0.02	512	12.8
	5	0.02	511	12.8
	6	0.02	512	12.8
	7	0.02	513	12.8
	8	0.02	520	12.8
	9	0.02	520	12.8
	10	0.02	519	12.8
	11	0.02	516	12.8
	12	0.02	515	12.8

TIME	POINT	V. H.	T °F.	VEL FT/SEC
	A-12	0.02	513	12.8
	11	0.02	518	12.8
	10	0.02	519	12.8
	9	0.02	520	12.8
	8	0.02	520	12.8
	7	0.02	512	12.8
	6	0.02	512	12.8
	5	0.02	511	12.8
	4	0.02	510	12.8
	3	0.01	512	9.0
	2	0.02	513	12.8
	1	0.03	505	15.6

$P_{Barometric}$ = 29.83 in. Hg

P_{Static} = -0.84 in. H_2O

P_{Stack} = 29.77 in. Hg

TRAVERSE VELOCITY 12.9 FT./SEC.

REFERENCE POINT VELOCITY _____ FT./SEC.

Pressure Correction Factor
~~FLUE FACTOR (TRAVERSE AREA)~~ 1.00

PITOT CORRECTION FACTOR 0.854

GAS DENSITY CORRECTION FACTOR 0.99

CORRECTED TRAVERSE VELOCITY -

12.9 x 1.00 x 0.854 x 0.99 = 10.9 FT./SEC.

AREA OF FLUE 27.0 SQ. FT. AV. FLUE TEMP. 514 °F.

VOL. = 10.9 FT./SEC. x 27.0 SQ. FT. x 60 = 17,700 CFM

VOL. = 17,700 CFM x $\frac{530^{\circ}R}{974^{\circ}R}$ x $\frac{29.77 in.Hg}{29.92 in.Hg}$ = 9,600 SCFM

VOL. = 9,600 SCFM x (100-3.3)%(H_2O) = 9,300 DSCFM

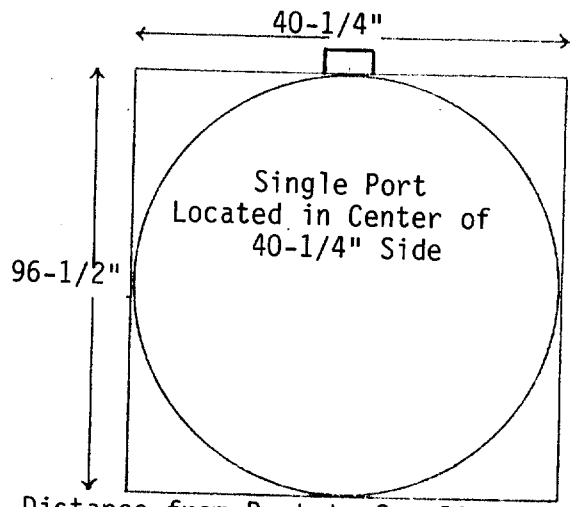

Distance from Port to Sampling Point:

1) 4"	5) 36"	9) 68"
2) 8"	6) 44"	10) 76"
3) 20"	7) 52"	11) 84"
4) 28"	8) 60"	12) 92"

HAP - 5086

COMMONWEALTH OF PENNSYLVANIA
DEPARTMENT OF HEALTH
AIR POLLUTION CONTROL

TEST NO. 0380 A

PAGE 8 OF 33 PAGES

GAS VOLUME DATA
Sampling Traverse

NAME OF FIRM

West Chester State College, West Chester, PA

DATE

2/4/80

SAMPLE STATION

Sampling port located in duct 2 feet downstream of Buell Mechanical Collector (Boiler No. 1)

TIME	POINT	V. H.	T °F.	VEL FT/SEC
LEAK CHECK	< 0.02	CFM @ 15	5 in. Hg	
2:53 PM	A-12	0.02	535	12.9
+5		0.02	530	12.9
3:07	A-11	0.02	520	12.8
+5		0.02	514	12.8
3:12	A-10	0.02	523	12.8
+5		0.02	526	12.9
3:17	A-9	0.02	521	12.8
+5		0.02	525	12.9
3:22	A-8	0.02	524	12.9
+5		0.02	521	12.8
3:27	A-7	0.02	520	12.8
+5		0.02	521	12.8
3:39 PM	A-6	0.02	522	12.8
+5		0.02	520	12.8
3:44	A-5	0.02	520	12.8
+5		0.02	524	12.9
3:49	A-4	0.02	518	12.8
+5		0.02	524	12.9
3:54	A-3	0.02	525	12.9
+5		0.02	525	12.9
3:59	A-2	0.02	531	12.9
+5		0.02	535	12.9
4:04	A-1	0.02	525	12.9
+5		0.02	520	12.8

$P_{Barometric}$ = 29.83 in. Hg

P_{Static} = -0.84 in. H_2O

P_{Stack} = 29.77 in. Hg

TRAVERSE VELOCITY 12.8 FT./SEC.

REFERENCE POINT VELOCITY _____ FT./SEC.

Pressure Correction Factor 1.00

PITOT CORRECTION FACTOR 0.854

GAS DENSITY CORRECTION FACTOR 0.99

CORRECTED TRAVERSE VELOCITY-

12.8 x 1.00 x 0.854 x 0.99 = 10.8 FT./SEC.

AREA OF FLUE 27.0 SQ. FT. AV. FLUE TEMP. 524 °F.

VOL. = 10.8 FT./SEC. x 27.0 SQ. FT. x 60 = 17,500 CFM

VOL. = 17,500 CFM x $\frac{530^{\circ}R}{984^{\circ}R}$ x $\frac{29.77 in.Hg}{29.92 in.Hg}$ = 9,400 SCFM

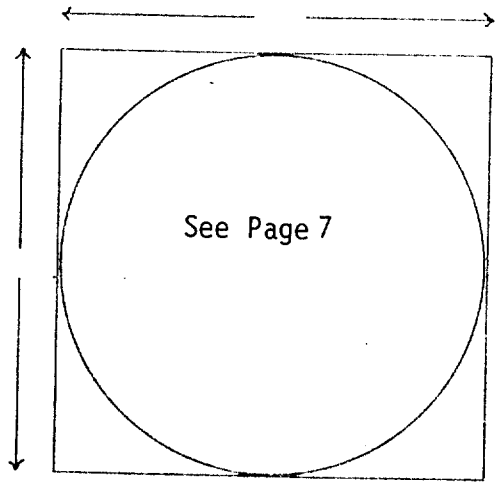

ER-AQ-037
2/73

COMMONWEALTH OF PENNSYLVANIA
DEPARTMENT OF ENVIRONMENTAL RESOURCES
BUREAU OF AIR QUALITY AND NOISE CONTROL

TEST NO. 0380 A

CALCULATION SHEET

NAME OF FIRM
West Chester State College, West Chester, PA

DATE
2/4/80

SAMPLE STATION
Sampling port located in duct 2 feet downstream of Buell Mechanical Collector (Boiler No. 1)

COLLECTION TRAIN FOR	SAMPLE POINT	SAMPLE NOZZLE DIA.
Particulate	A (1-12)	0.626 inch
TOTAL WGT. COLLECTED (GMS)	**CONDENSATE CC.**	
0.2058	31	

CONDENSATE: ~~XXXXX~~ = 0.0474 × 31 = 1.5 S_{CF}

METER CORR. 47.1 × 530/569 × 29.96/29.92 = 43.9 DSCF

CONCENTRATION $\frac{0.2058}{43.9}$ $\frac{GM \times 15.43}{DSCF}$ = 0.072 GR/DSCF

CALCULATED LOSS: $\frac{0.072}{7000}$ $\frac{GR}{DSCF}$ 9,300 $D_{SCFM \times 60}$ = 5.7 LBS/HR

CALCULATED LOSS: $\frac{5.7 \text{ lbs./hr.}}{20.4 \text{ mm BTU/hr.}}$ = 0.28 LBS./MILLION BTUs

SAMPLING POINT	TIME	Meter CU. FT.	Line VAC IN. HG	Meter Avg. T °F.	Orifice ΔH in. H_2O	SAMPLING POINT	TIME	Meter CU. FT.	Line VAC IN. HG	Meter Avg. T °F.	Orifice ΔH in. H_2O
LEAK CHECK < 0.02 CFM @ 15.5 in. Hg											
A-12	2:53 PM	507.5	4.1	98	1.7	A-6	3:39 PM	530.9	4.2	108	1.8
	+5	511.4	3.9	100	1.7		+5	534.8	4.2	110	1.8
A-11	3:07	511.4	4.0	98	1.7	A-5	3:44	534.8	4.3	110	1.8
	+5	515.3	4.0	100	1.7		+5	538.8	4.3	113	1.8
A-10	3:12	515.3	4.0	100	1.7	A-4	3:49	538.8	4.4	113	1.8
	+5	519.1	4.0	104	1.6		+5	542.7	4.3	115	1.8
A-9	3:17	519.1	4.1	104	1.6	A-3	3:54	542.7	4.3	115	1.8
	+5	522.9	4.1	108	1.7		+5	546.7	4.3	116	1.8
A-8	3:22	522.9	4.3	108	1.7	A-2	3:59	546.7	4.4	116	1.8
	+5	526.9	4.4	110	1.8		+5	550.7	4.3	118	1.8
A-7	3:27	526.9	4.3	110	1.8	A-1	4:04	550.7	4.3	118	1.7
	+5	530.9	4.3	112	1.8		+5	554.6	4.4	118	1.7
						TOTAL	60 MIN	47.1	AVG	109	1.7
						LEAK CHECK < 0.02 CFM @ 10.0 in. Hg					
						PURGE WITH 10 CF N_2					

HAP - 6686

COMMONWEALTH OF PENNSYLVANIA
DEPARTMENT OF HEALTH
AIR POLLUTION CONTROL

TEST NO. 0380 D

GAS VOLUME DATA
Sampling Traverse

NAME OF FIRM

West Chester State College, West Chester, PA

DATE

2/5/80

SAMPLE STATION

Sampling ports located in duct 2 feet downstream of Buell Mechanical Collector (Boiler No. 1)

TIME	POINT	V. H.	T °F.	VEL FT/SEC
LEAK CHECK < 0.02	CFM @ 14.5 in. Hg			
10:00 AM	A-12	0.02	456	12.4
+5		0.02	437	12.3
10:05	A-11	0.02	503	12.7
+5		0.02	515	12.8
10:10	A-10	0.03	500	15.6
+5		0.02	510	12.8
10:15	A-9	0.03	540	15.9
+5		0.02	533	12.9
10:20	A-8	0.03	534	15.8
+5		0.03	531	15.8
10:25	A-7	0.02	527	12.9
+5		0.02	525	12.9
10:41 AM	A-6	0.02	559	13.1
+5		0.02	560	13.1
10:46	A-5	0.02	555	13.1
+5		0.02	557	13.1
10:51	A-4	0.02	561	13.1
+5		0.02	554	13.0
10:56	A-3	0.02	555	13.1
+5		0.02	554	13.0
11:01	A-2	0.03	550	16.0
+5		0.03	553	16.0
11:06	A-1	0.02	512	12.8
+5		0.02	505	12.7

LEAK CHECK < 0.01 CFM @ 10.0 in. Hg
PURGE WITH 10 CF N_2

$P_{Barometric}$ = 29.92 in. Hg

P_{Static} = -0.84 in. H_2O

P_{Stack} = 29.86 in. Hg

TRAVERSE VELOCITY 13.6 FT./SEC.

REFERENCE POINT VELOCITY _____ FT./SEC.

Pressure Correction Factor
~~XXXXXXXXXXXXXXXXXXXXXXXXXXXX~~ 1.00

PITOT CORRECTION FACTOR 0.854

GAS DENSITY CORRECTION FACTOR 0.99

CORRECTED TRAVERSE VELOCITY-

13.6 x 1.00 x 0.854 x 0.99 = 11.5 FT./SEC.

AREA OF FLUE 27.0 SQ. FT. AV. FLUE TEMP. 528 °F.

VOL. = 11.5 FT./SEC. x 27.0 SQ. FT. x 60 = 18,600 CFM

VOL. = 18,600 CFM x $\frac{530^{\circ}R}{988^{\circ}R}$ x $\frac{29.86 in.Hg}{29.92 in.Hg}$ = 10,000 SCFM

VOL. = 10,000 SCFM x (100 - 2.1)%(H_2O) = 9,800 DSCFM

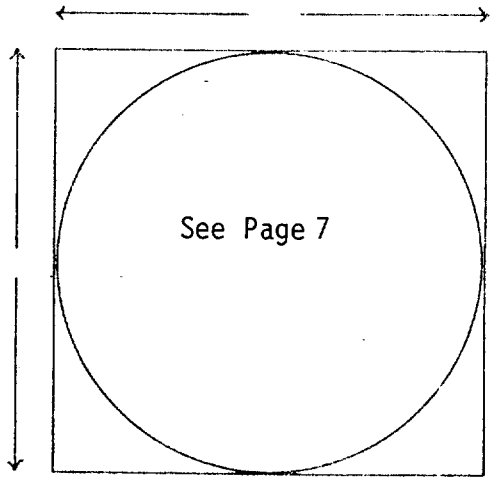

ER-AQ-037
2/73

COMMONWEALTH OF PENNSYLVANIA
DEPARTMENT OF ENVIRONMENTAL RESOURCES
BUREAU OF AIR QUALITY AND NOISE CONTROL

TEST NO. 0380 D

CALCULATION SHEET

NAME OF FIRM: West Chester State College, West Chester, PA

DATE: 2/5/80

SAMPLE STATION: Sampling port located in duct 2 feet downstream of Buell Mechanical Collector (Boiler No. 1)

COLLECTION TRAIN FOR: Particulate

SAMPLE POINT: A (12-1)

SAMPLE NOZZLE DIA.: 0.626 inch

TOTAL WGT. COLLECTED (GMS): 0.3185

CONDENSATE CC.: 22

CONDENSATE: [illegible] × 0.0474 × 22 = 1.0 SCF

METER CORR. 49.2 × 530/561 × 30.06/29.92 = 46.7 DSCF

CONCENTRATION $\frac{0.3185 \text{ GM} \times 15.43}{46.7 \text{ DSCF}}$ = 0.105 GR/DSCF

CALCULATED LOSS: $\frac{0.105 \text{ GR/DSCF}}{7000}$ 9,800 DSCFM × 60 = 8.8 LBS/HR

CALCULATED LOSS: $\frac{8.8 \text{ lbs./hr.}}{24.0 \text{ mm BTU/hr.}}$ = 0.37 LBS./MILLION BTUs

SAMPLING POINT	TIME	Meter CU. FT.	Line VAC IN. HG	Meter Avg. T °F.	Orifice ΔH in. H_2O	SAMPLING POINT	TIME	Meter CU. FT.	Line VAC IN. HG	Meter Avg. T °F.	Orifice ΔH in. H_2O
LEAK CHECK < 0.02 CFM @ 14.5 in. Hg											
A-12	10:00AM	555.4	5.4	88	1.8	A-6	10:41AM	580.8	5.0	96	1.7
	+5	559.5	5.3	92	1.8		+5	584.6	5.0	100	1.7
A-11	10:05	559.5	5.1	92	1.8	A-5	10:46	584.6	5.0	100	1.7
	+5	563.4	5.0	96	1.8		+5	588.5	5.0	102	1.7
A-10	10:10	563.4	6.6	96	2.4	A-4	10:51	588.5	5.0	102	1.7
	+5	567.8	5.3	98	1.8		+5	592.3	5.0	105	1.7
A-9	10:15	567.8	6.6	98	2.4	A-3	10:56	592.3	5.0	105	1.6
	+5	572.2	5.2	101	1.7		+5	596.1	4.9	106	1.6
A-8	10:20	572.2	6.5	101	2.3	A-2	11:01	596.1	6.5	106	2.5
	+5	576.8	6.5	103	2.4		+5	600.8	6.6	107	2.4
A-7	10:25	576.8	5.4	103	1.7	A-1	11:06	600.8	5.0	107	1.6
	+5	580.8	5.4	104	1.7		+5	604.6	5.0	108	1.6
						TOTAL	60 MIN	49.2	AVG	101	1.9
						LEAK CHECK < 0.01 CFM @ 10 in. Hg					
						PURGE WITH 10 CF N_2					

COMMONWEALTH OF PENNSYLVANIA
DEPARTMENT OF ENVIRONMENTAL RESOURCES
BUREAU OF AIR QUALITY CONTROL

MOISTURE CALCULATIONS

DATE 2/4 & 5/80

1. PERCENT WATER VAPOR IN GASES	TEST NUMBERS				
	0380 A	0380 D			
A. Gas pressure at meter (Inches HG + ΔH)	29.96	30.06			
B. Vapor pressure of water at impinger temp. (In. HG.)					
C. Vol. of metered gas (Cu. Ft.) Dry Std.	43.9	46.7			
D. Vol. of water vapor metered (BC/A, Cu. Ft.)					
E. Vol. of water vapor condensed (Cu. Ft.) Std.	1.5	1.0			
F. Total vol. of water vapor in gas sample (D + E, Cu. Ft.) Std.	1.5	1.0			
G. Total vol. of gas sample (C + E, Cu. Ft.) Std.	45.4	47.7			
H. % water vapor in sampled gas (100 F/G)	3.3	2.1			
I. % water vapor (Average Value)	4.0	4.0			
2. ORSAT ANALYSIS – DRY BASIS	Fyrite	Fyrite			
A. CO_2 (%)	9.0	8.0			
B. CO (%)					
C. O_2 (%)	8.0	12.0			
D. N_2 (%)	83.0	80.0			

LABORATORY RESULTS:

Sampling Train Component	0380 A Wt. in Gms. Insoluble	0380 A Wt. in Gms. Soluble	0380 D Wt. in Gms. Insoluble	0380 D Wt. in Gms. Soluble
Nozzle, Probe, Flexible Tubing, Front Half Filter Holder	0.0139	0.0760	0.0251	0.1125
Glass Fiber Filter No.	0.1151	(#50609)	0.1801	(#50614)
Back Half Filter HOlder, Impingers, Connecting Glassware	0.0008	0.0003*	0.0008	0.0067*
Total	0.2058		0.3185	

Condensate Volume:	Impingers (ml)	21	14
	Silica Gel (gms)	10	8
	Total (cc)	31	22

*Not included in total weight

ER-AQ-036
2/73

COMMONWEALTH OF PENNSYLVANIA
DEPARTMENT OF ENVIRONMENTAL RESOURCES
BUREAU OF AIR QUALITY AND NOISE CONTROL

PROCESS DATA

DATE 2/4 & 5/80

TEST NUMBER 0380 A, D

NAME OF FIRM
West Chester StateCollege, West Chester, PA

DESCRIPTION OF EQUIPMENT TESTED AND OPERATION COVERED IN TEST
Keeler CP Boiler No. 1 with Illinois Chain Grate Stoker

SAMPLING STATION LOCATION
Sampling port located in duct 2 feet downstream of Buell Mechanical Collector

LENGTH OF PROCESS CYCLE 0380 A Continuous 2:53 PM — TIME CYCLE BEGINS 0380 A 4:09 PM — ENDS

TIME OF TEST: BEGINS 0380 D 10:00 AM — ENDS 0380 D 11:11 AM — CYCLE COVERAGE Complete

RAW MATERIAL CHARGED DURING THIS TIME:

	Test No.	0380 A	0380 D
MATERIAL	WT(LBS.)		
MATERIAL	WT(LBS.)		
MATERIAL	WT(LBS.)		
MATERIAL	WT(LBS.)		
MATERIAL	WT(LBS.)		
SOLID FUEL CHARGED Buckwheat No. 3 Anthracite Coal	WT(LBS.)	3,619*	2,367+
TOTAL POUNDS	WT(LBS.)		

COLLECTION EQUIPMENT TYPE
Buell Mechanical Collector

PLANT OFFICIAL AND TITLE
Albert Sykes, Institutional Maintenance Supervisor

ADDITIONAL COMMENTS
*Readings taken between 2:11 Pm and 4:28 PM

+Readings taken between 9:44 AM and 11:00 AM

Coal Analysis:

% Sulfur 0.86

% Ash 10.44

Heating Value 12,873 BTU/lb.

West Chester State College
West Chester, PA
Process Data
Boiler No. 1

Test No. 0380 A, D
Date: 2/4 & 5/80

Test No. 0380 A

Time	Steam Load lbs./hr.	Steam Integrator (x400)	Steam Pressure PSIG
2:11 PM	14,000	823501	130
2:30	13,500	823512	130
2:45	14,000	823522	130
3:00	13,000	823532	130
3:15	15,000	823541	130
3:30	15,000	823551	130
3:45	14,000	823560	130
4:00	15,000	523569	130
4:17	16,000	823581	130
4:28	15,000	823588	130

Test No. 0380 D

Time	Steam Load lbs./hr.	Steam Integrator (x400)	Steam Pressure PSIG
9:44 AM	18,500	824328	130
10:00	16,000	824341	130
10:30	18,000	824361	130
11:00	17,000	824384	130

HAP - 5686

COMMONWEALTH OF PENNSYLVANIA
DEPARTMENT OF HEALTH
AIR POLLUTION CONTROL

TEST NO. 0380 B, E

PAGE 15 OF 33 PAGES

GAS VOLUME DATA
Preliminary Traverse

NAME OF FIRM

West Chester State College, West Chester, PA

DATE

2/4/80

SAMPLE STATION

Sampling port located in duct approx. 4 feet downstream of Buell Collector (Boiler No. 3)

TIME	POINT	V. H.	T °F.	VEL FT/SEC
12:35 PM	A-1	0.015	510	11.1
	2	0.01	530	9.1
	3	0.01	523	9.1
	3	0.01	520	9.1
	2	0.01	516	9.0
	1	0.01	513	9.0
	1	0.015	516	11.1
	2	0.01	523	9.1
	3	0.015	523	11.1
	B-1	0.02	500	12.7
	2	0.02	502	12.7
	3	0.005	481	6.3
	3	0.01	514	9.0
	2	0.02	506	12.7
	1	0.01	500	9.0
	1	0.01	528	9.1
	2	0.015	523	11.1
	3	0.01	519	9.1

TIME	POINT	V. H.	T °F.	VEL FT/SEC
	C-1	0.01	519	9.1
	2	0.015	522	11.1
	3	0.05	515	20.2
	3	0.0	528	0.0
	2	0.01	525	9.1
	1	0.005	522	6.4
	1	0.01	531	9.1
	2	0.015	532	11.2
	3	0.0	528	0.0
	D-1	0.01	519	9.1
	2	0.01	513	9.0
	3	0.005	512	6.4
	3	0.01	528	9.1
	2	0.01	526	9.1
	1	0.01	522	9.1
	1	0.01	529	9.1
	2	0.01	528	9.1
	3	0.01	528	9.1

$P_{Barometric}$ = 29.83 in. Hg

P_{Static} = Negligible

P_{Stack} = 29.83 in. Hg

TRAVERSE VELOCITY 9.3 FT./SEC.

REFERENCE POINT VELOCITY _____ FT./SEC.

Pressure Correction Factor
~~XXXXXXXXXXXXXXXXXXXXXXXXXXXXXXXX~~ 1.00

PITOT CORRECTION FACTOR 0.843

GAS DENSITY CORRECTION FACTOR 1.00

CORRECTED TRAVERSE VELOCITY -

9.3 x 1.00 x 0.843 x 1.00 = 7.8 FT./SEC.

AREA OF FLUE 18.6 SQ. FT. AV. FLUE TEMP. 519 °F.

VOL. = 7.8 FT./SEC. x 18.6 SQ. FT. X 60 = 8,700 CFM

VOL. = 8,700 CFM $\times \frac{530^{\circ}R}{979^{\circ}R} \times \frac{29.83 in.Hg}{29.92 in.Hg}$ = 4,700 SCFM

4,700 SCFM x (100 - 2.5)%(H_2O) = 4,600 DSCFM

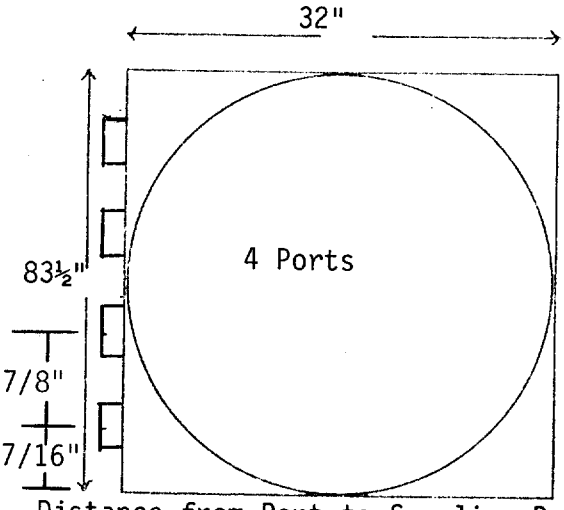

Distance from Port to Sampling Point:
1) 5-5/16" 2) 16" 3) 26-11/16"

HAP - 5686

COMMONWEALTH OF PENNSYLVANIA
DEPARTMENT OF HEALTH
AIR POLLUTION CONTROL

TEST NO. 0380 B

GAS VOLUME DATA
Sampling Traverse

NAME OF FIRM

DATE

West Chester State College, West Chester, PA

SAMPLE STATION

2/4/80

Sampling ports located in duct approx. 4 feet downstream of Buell Collector (Boiler No. 3)

TIME	POINT	V. H.	T °F.	VEL FT/SEC
LEAK CHECK < 0.02 CFM @ 15 in. Hg				
2:47 PM	D-3	0.01	524	9.1
+5		0.01	528	9.1
2:52	D-2	0.015	529	11.2
+5		0.015	529	11.2
2:58	D-1	0.02	532	12.9
+5		0.015	533	11.2
3:10	C-3	0.015	508	11.0
+5		0.02	508	12.8
3:15	C-2	0.01	527	9.1
+5		0.015	529	11.2
3:20	C-1	0.01	531	9.1
+5		0.01	528	9.1

TIME	POINT	V. H.	T °F.	VEL FT/SEC
3:40 PM	B-3	0.005	537	6.5
+5		0.005	536	6.5
3:45	B-2	0.01	531	9.1
+5		0.02	534	12.9
3:50	B-1	0.015	538	11.2
+5		0.015	528	11.2
4:00	A-3	0.005	518	6.4
+5		0.005	532	6.4
4:10	A-2	0.005	519	6.4
+5		0.005	523	6.4
4:15	A-1	0.01	451	8.8
+5		0.01	435	8.7

LEAK CHECK < 0.01 @ 17 in. Hg

PURGE WITH 10 CF N_2

$P_{Barometric}$ = 29.83 in. Hg

P_{Static} = Negligible

P_{Stack} = 29.83 in. Hg

TRAVERSE VELOCITY 9.5 FT./SEC.

REFERENCE POINT VELOCITY _____ FT./SEC.

Pressure Correction Factor
~~XXXXXXXXXXXXXXXXXXXXXXXXXXXXXX~~ 1.00

PITOT CORRECTION FACTOR 0.843

GAS DENSITY CORRECTION FACTOR 1.00

CORRECTED TRAVERSE VELOCITY -

9.5 x 1.00 x 0.843 x 1.00 = 8.0 FT./SEC.

AREA OF FLUE 18.6 SQ. FT. AV. FLUE TEMP. 520 °F.

VOL. = 8.0 FT./SEC. x 18.6 SQ. FT. x 60 = 8,900 CFM

VOL. = 8,900 CFM x $\frac{530^{\circ}R}{980^{\circ}R}$ x $\frac{29.83 in.Hg}{29.92 in.Hg}$ = 4,800 SCFM

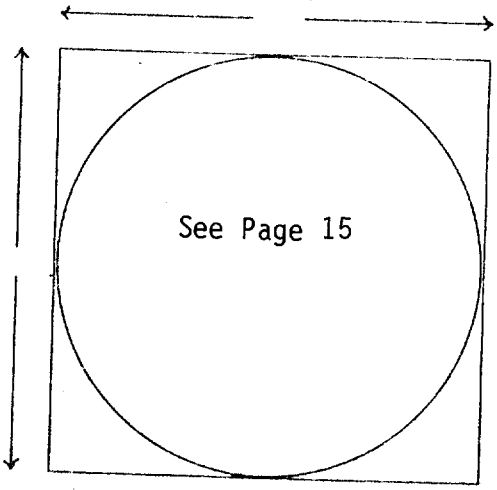

ER-AQ-037
2/73

COMMONWEALTH OF PENNSYLVANIA
DEPARTMENT OF ENVIRONMENTAL RESOURCES
BUREAU OF AIR QUALITY AND NOISE CONTROL

TEST NO. 0380 B

CALCULATION SHEET

NAME OF FIRM
West Chester State College, West Chester, PA

DATE
2/4/80

SAMPLE STATION
Sampling ports located in duct approx. 4 feet downstream of Buell Collector (Boiler No. 3)

COLLECTION TRAIN FOR	SAMPLE POINT	SAMPLE NOZZLE DIA.
Particulate	D, C, B, A (3-1)	0.754 inch
TOTAL WGT. COLLECTED (GMS)	**CONDENSATE CC.**	
0.2569	26	

CONDENSATE: ~~XXXXX~~ = 0.0474 × 26 = 1.2 CF

METER CORR. 49.2 × 530/568 × 29.98/29.92 = 46.0 DSCF

CONCENTRATION $\frac{0.2569 \text{ GM} \times 15.43}{46.0 \text{ DSCF}}$ = 0.086 GR/DSCF

CALCULATED LOSS: $\frac{0.086 \text{ GR/DSCF}}{7000} \times 4{,}600 \text{ } D_{SCFM} \times 60$ = 3.4 LBS/HR

CALCULATED LOSS: $\frac{3.4 \text{ lbs./hr.}}{11.2 \text{ mm BTU/hr.}}$ = 0.30 LBS./MILLION BTUs

SAMPLING POINT	TIME	Meter CU. FT.	Line VAC IN. HG	Meter Avg. T°F.	Orifice ΔH in. H_2O	SAMPLING POINT	TIME	Meter CU. FT.	Line VAC IN. HG	Meter Avg. T°F.	Orifice ΔH in. H_2O
LEAK CHECK < 0.02 CFM		@ 15 in. Hg									
D-3	2:47 PM	143.4	4.7	94	1.8	B-3	3:40 PM	169.9	3.3	110	0.92
	+5	147.3	4.7	97	1.8		+5	172.6	3.3	104	0.92
D-2	2:52	147.3	4.6	98	2.1	B-2	3:45	172.6	4.5	108	1.7
	+5	151.9	4.6	100	2.1		+5	177.4	6.0	109	3.6
D-1	2:57	151.9	4.7	104	3.4	B-1	3:50	177.4	5.5	112	3.3
	+5	156.3	4.6	104	3.4		+5	182.6	6.5	114	3.3
C-3	3:10	156.3	4.6	103	2.7	A-3	4:00	182.6	4.0	114	0.96
	+5	161.4	4.7	108	2.7		+5	185.4	4.0	112	0.96
C-2	3:15	161.4	4.5	108	1.8	A-2	4:05	185.4	4.0	112	0.93
	+5	165.8	4.0	110	2.7		+5	188.8	4.0	114	0.93
C-1	3:20	165.8	4.0	110	1.8	A-1	4:10	188.8	4.5	114	2.0
	+5	169.9	4.3	111	2.0		+5	192.6	4.5	114	2.0
						TOTAL	60 MIN	49.2	AVG	108	2.1
						LEAK CHECK < 0.01 CFM @ 17 in. Hg					
						PURGE WITH 10 CF N_2					

HAL - 5686

COMMONWEALTH OF PENNSYLVANIA
DEPARTMENT OF HEALTH
AIR POLLUTION CONTROL

TEST NO. 0380 E

GAS VOLUME DATA
Sampling Traverse

NAME OF FIRM: West Chester State College, West Chester, PA

DATE: 2/5/80

SAMPLE STATION: Sampling ports located in duct approx. 4 feet downstream of Buell Collector (Boiler No. 3)

TIME	POINT	V. H.	T °F.	VEL FT/SEC
LEAK CHECK	< 0.02 CFM @ 15 in. Hg			
10:05 AM	A-3	0.015	527	11.2
+5		0.02	536	12.9
10:10	A-2	0.03	538	15.9
+5		0.028	539	15.3
10:15	A-1	0.02	519	12.8
+5		0.02	523	12.8
10:25	B-3	0.02	530	12.9
+5		0.04	534	18.3
10:30	B-2	0.03	534	15.8
+5		0.028	537	15.3
10:35	B-1	0.015	519	11.1
+5		0.015	510	11.1

TIME	POINT	V. H.	T °F.	VEL FT/SEC
10:50 AM	C-3	0.028	544	15.4
+5		0.028	545	15.4
10:55	C-2	0.01	540	9.2
+5		0.01	537	9.2
11:00	C-1	0.005	506	6.4
+5		0.01	478	8.9
11:05	D-3	0.015	497	11.0
+5		0.015	528	11.2
11:10	D-2	0.005	533	6.5
+5		0.005	532	6.4
11:15	D-1	0.005	515	6.4
+5		0.005	495	6.3

LEAK CHECK < 0.02 CFM @ 15 in. Hg

PURGE WITH 10 CF N_2

$P_{Barometric}$ = 29.92 in. Hg

P_{Static} = Negligible

P_{Stack} = 29.92 in. Hg

TRAVERSE VELOCITY 11.6 FT./SEC.

REFERENCE POINT VELOCITY _____ FT./SEC.

Pressure Correction Factor
XXXXXXXXXXXXXXXXXXXXXXXXXX 1.00

PITOT CORRECTION FACTOR 0.843

GAS DENSITY CORRECTION FACTOR 0.99

CORRECTED TRAVERSE VELOCITY -

11.6 × 1.00 × 0.843 × 0.99 = 9.7 FT./SEC.

AREA OF FLUE 18.6 SQ. FT. AV. FLUE TEMP. 525 °F.

VOL. = 9.7 FT./SEC. X 18.6 SQ. FT. X 60 = 10,800 CFM

VOL. = 10,800 CFM × $\frac{530^{\circ}R}{985^{\circ}R}$ × $\frac{29.92 in.Hg}{29.92 in.Hg}$ = 5,800 SCFM

VOL. = 5,800 SCFM x (100 - 2.1)%(H_2O) = 5,700 DSCFM

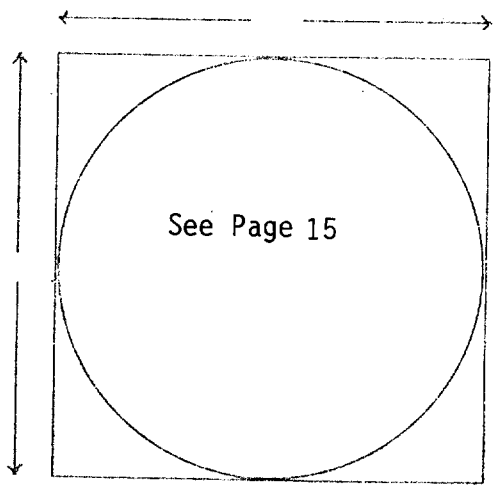

ER-AQ-037
2/73

COMMONWEALTH OF PENNSYLVANIA
DEPARTMENT OF ENVIRONMENTAL RESOURCES
BUREAU OF AIR QUALITY AND NOISE CONTROL

TEST NO. 0380 E

CALCULATION SHEET

NAME OF FIRM	DATE
West Chester State College, West Chester, PA	2/5/80

SAMPLE STATION
Sampling ports located in duct approx. 4 feet downstream of Buell Collector (Boiler No. 3)

COLLECTION TRAIN FOR	SAMPLE POINT	SAMPLE NOZZLE DIA.
Particulate	A, B, C, D (3-1)	0.754 inch

TOTAL WGT. COLLECTED (GMS)	CONDENSATE CC.
0.3245	26

CONDENSATE: ~~XXXXX~~ 0.0026 × 0.0474 × 26 = 1.2 CF

METER CORR. 57.7 × 530/560 × 30.13/29.92 = 55.0 DSCF

CONCENTRATION $\frac{0.3245 \text{ GM} \times 15.43}{55.0 \text{ DSCF}}$ = 0.091 GR/DSCF

CALCULATED LOSS: $\frac{0.091 \text{ GR/DSCF}}{7000}$ 5,700 $D_{SCFM} \times 60$ - 4.4 LBS/HR

CALCULATED LOSS: $\frac{4.4 \text{ lbs./hr.}}{14.0 \text{ mm BTU/hr.}}$ = 0.31 LBS./MILLION BTUs

SAMPLING POINT	TIME	Meter CU. FT.	Line VAC IN. HG	Meter Avg. T °F.	Orifice ΔH in. H_2O	SAMPLING POINT	TIME	Meter CU. FT.	Line VAC IN. HG	Meter Avg. T °F.	Orifice ΔH in. H_2O
A-3	10:05 AM	193.1	6.5	84	3.2	C-3	10:50 AM	226.4	12.0	100	4.1
	+5	198.5	6.6	90	3.6		+5	232.1	11.5	102	4.0
A-2	10:10	198.5	6.8	92	4.1	C-2	10:55	232.1	8.8	102	2.1
	+5	204.3	7.0	94	4.5		+5	236.6	9.3	104	2.5
A-1	10:15	204.3	7.0	96	3.5	C-1	11:00	236.6	8.8	104	1.0
	+5	209.5	7.4	98	3.5		+5	240.3	8.6	104	1.8
B-3	10:25	209.5	9.2	96	4.4	D-3	11:05	240.3	5.0	103	3.0
	+5	215.3	9.5	96	4.3		+5	244.8	9.0	104	3.0
B-2	10:30	215.3	9.8	96	4.2	D-2	11:10	244.8	5.5	106	1.0
	+5	221.2	9.9	102	4.2		+5	247.8	5.5	104	1.0
B-1	10:35	221.2	8.4	102	3.0	D-1	11:15	247.8	6.0	106	1.0
	+5	226.4	8.4	102	2.4		+5	250.8	6.0	106	1.0
						TOTAL	60 MIN	57.7	AVG	100	2.9
						LEAK CHECK < 0.02 CFM @ 15 in. Hg					
						PURGE WITH 10 CF N_2					

COMMONWEALTH OF PENNSYLVANIA
DEPARTMENT OF ENVIRONMENTAL RESOURCES
BUREAU OF AIR QUALITY CONTROL

MOISTURE CALCULATIONS

DATE 2/4 & 5/80

1. PERCENT WATER VAPOR IN GASES	TEST NUMBERS				
	0380 B	0380 E			
A. Gas pressure at meter (Inches HG + ΔH)	29.98	30.13			
B. Vapor pressure of water at impinger temp. (In. HG.)					
C. Vol. of metered gas (Cu. Ft.) Dry Std.	46.0	55.0			
D. Vol. of water vapor metered (BC/A, Cu. Ft.)					
E. Vol. of water vapor condensed (Cu. Ft.) Std.	1.2	1.2			
F. Total vol. of water vapor in gas sample (D + E, Cu. Ft.) Std.	1.2	1.2			
G. Total vol. of gas sample (C + E, Cu. Ft.) Std.	47.2	56.2			
H. % water vapor in sampled gas (100 F/G)	2.5	2.1			
I. % water vapor (Average Value)	4.0	4.0			
2. ORSAT ANALYSIS – DRY BASIS	Fyrite	Fyrite			
A. CO_2 (%)	5.5	8.0			
B. CO (%)					
C. O_2 (%)	12.0	10.0			
D. N_2 (%)	82.5	82.0			

LABORATORY RESULTS:

	0380 B		0380 E	
	Weight in Grams			
Sampling Train Component	Insoluble	Soluble	Insoluble	Soluble
Nozzle, Probe, Front Half Filter Holder	0.0112	0.0308	0.0169	0.0234
Glass Fiber Filter	0.2145	(#50608)	0.2822	(#50601)
Back Half Filter Holder, Impingers, Connecting Glassware	0.0004	0.0742*	0.0020	0.1921*
Total	0.2569		0.3245	
Condensate Volume: Impingers (ml)	19		15	
Silica Gel (gms)	7		11	
Total (cc)	26		26	

*Not included in total weight

ER-AQ-036
2/73

COMMONWEALTH OF PENNSYLVANIA
DEPARTMENT OF ENVIRONMENTAL RESOURCES
BUREAU OF AIR QUALITY AND NOISE CONTROL

PROCESS DATA

TEST NUMBER 0380 B, E

DATE 2/4 & 5/80

NAME OF FIRM
West Chester State College, West Chester, PA

DESCRIPTION OF EQUIPMENT TESTED AND OPERATION COVERED IN TEST
Keeler CP Boiler No. 3 with Williamson traveling grate stoker

SAMPLING STATION LOCATION
Sampling ports located in duct approx. 4 feet downstream of Buell Collector

LENGTH OF PROCESS CYCLE Continuous

TIME CYCLE BEGINS
0380 B 2:47 PM
4:15 PM

ENDS

TIME OF TEST: BEGINS
0380 E 10:05 AM

ENDS
11:20 AM

CYCLE COVERAGE Complete

RAW MATERIAL CHARGED DURING THIS TIME:

	Test No.	0380 B	0380 E
MATERIAL	WT(LBS.)		
MATERIAL	WT(LBS.)		
MATERIAL	WT(LBS.)		
MATERIAL	WT(LBS.)		
MATERIAL	WT(LBS.)		
SOLID FUEL CHARGED Buckwheat No. 3 Anthracite Coal	WT(LBS.)	2,073*	3,152+
TOTAL POUNDS	WT(LBS.)		

COLLECTION EQUIPMENT TYPE
Buell Mechanical Collector

PLANT OFFICIAL AND TITLE
Albert Sykes, Institutional Maintenance Supervisor

ADDITIONAL COMMENTS
*Readings taken between 2:09 PM and 4:32 PM

+Readings taken between 9:36 AM and 12:30 PM

Coal Analysis:

% Ash	10.44
% Sulfur	0.86
Heating Value	12,873

West Chester State College
West Chester, PA
Process Data
Boiler No. 3

Test No. 0380 B, E
Date: 2/4 & 5/80

0380 B

Time	Steam Load lbs./hr.	Steam Integrator (x250)	Steam Pressure PSIG
2:09 PM	7,500	445449	129
2:30	8,000	445460	129
2:45	8,000	445470	129
3:00	8,000	445479	129
3:15	8,000	445487	129
3:30	8,000	445495	129
3:45	8,500	445504	129
4:00	7,800	445512	129
4:17	8,500	445522	129
4:32	8,000	445530	129

0380 E

Time	Steam Load lbs./hr.	Steam Integrator (x250)	Steam Pressure PSIG
9:36 AM	8,500	446112	128
10:00	9,000	446128	128
10:30	8,500	446145	128
11:00	9,000	446164	128
11:30	8,600	446182	128
12:00	9,000	446202	128
12:30	8,900	446221	128

HAP - 5686

COMMONWEALTH OF PENNSYLVANIA
DEPARTMENT OF HEALTH
AIR POLLUTION CONTROL

TEST NO. 0380 C, F

GAS VOLUME DATA
Preliminary Traverse

NAME OF FIRM

DATE

West Chester State College, West Chester, PA — 2/4/80

SAMPLE STATION

Sampling ports located in duct approx. 4 feet downstream of Buell Collector (Boiler No. 4)

TIME	POINT	V. H.	T °F.	VEL FT/SEC
12:06 AM	A-2	0.01	549	9.2
	1	0.02	550	13.0
	1	0.03	550	16.0
	2	0.01	550	9.2
	2	0.01	550	9.2
	1	0.03	550	16.0
12:13	B-2	0.04	569	18.6
	1	0.04	564	18.6
	1	0.04	557	18.5
	2	0.04	570	18.6
	2	0.04	571	18.6
	1	0.04	554	18.5
12:15	C-2	0.04	525	18.2
	1	0.04	534	18.3
	1	0.04	533	18.3
	2	0.04	528	18.2
	2	0.05	531	20.4
	1	0.04	534	18.3
12:17 PM	D-2	0.04	528	18.2
	1	0.04	538	18.3
	1	0.04	539	18.3
	2	0.05	532	20.4
	2	0.04	534	18.3
	1	0.04	539	18.3
12:19	E-2	0.03	536	15.8
	1	0.03	539	15.9
	1	0.03	538	15.9
	2	0.03	537	15.9
	2	0.04	538	18.3
	1	0.03	538	15.9
12:20	F-2	0.00	526	0.0
	1	0.00	529	0.0
	1	0.00	529	0.0
	2	0.00	527	0.0
	2	0.00	528	0.0
	1	0.00	529	0.0

$P_{Barometric}$ = 29.83 in. Hg

P_{Static} = Negligible

P_{Stack} = 29.83 in. Hg

TRAVERSE VELOCITY 14.0 FT./SEC.

REFERENCE POINT VELOCITY _____ FT./SEC.

Pressure Correction Factor
~~XXXXXXXXXXXXXXXXXXXXXXXXXXXX~~ 1.00

PITOT CORRECTION FACTOR 0.852

GAS DENSITY CORRECTION FACTOR 0.99

CORRECTED TRAVERSE VELOCITY -

14.0 x 1.00 x 0.852 x 0.99 = 11.8 FT./SEC.

AREA OF FLUE 26.4 SQ. FT. AV. FLUE TEMP. 541 °F.

VOL. = 11.8 FT./SEC. X 26.4 SQ. FT. X 60 = 18,700 CFM

VOL. = 18,700 CFM $\times \frac{530^{\circ}R}{1001^{\circ}R} \times \frac{29.83 in.Hg}{29.92 in.Hg}$ = 9,900 SCFM

VOL. = 9,900 SCFM x (100 - 2.5)%(H_2O) = 9,700 DSCFM

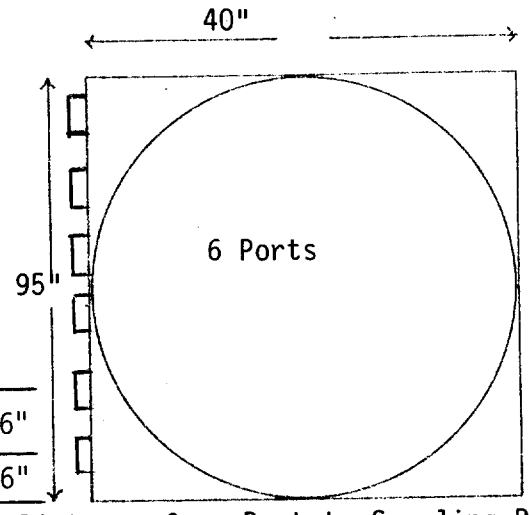

Distance from Port to Sampling Point:
1) 10" 2) 30"

HAP - 5686

COMMONWEALTH OF PENNSYLVANIA
DEPARTMENT OF HEALTH
AIR POLLUTION CONTROL

TEST NO. 0380 C

GAS VOLUME DATA
Sampling Traverse

NAME OF FIRM: West Chester State College, West Chester, PA

DATE: 2/4/80

SAMPLE STATION: Sampling ports located in duct approx. 4 feet downstream of Buell Collector (Boiler No. 4)

TIME	POINT	V. H.	T °F.	VEL FT/SEC
LEAK CHECK < 0.01 CFM @ 10 in. Hg				
2:48 PM	A-2	0.03	535	15.8
+3		0.03	575	16.2
+6		0.03	574	16.2
2:54	A-1	0.02	561	13.1
+3		0.02	548	13.0
+6		0.02	547	13.0
3:10	B-2	0.04	550	18.4
+3		0.04	550	18.4
+6		0.04	575	18.6
3:16	B-1	0.02	552	13.0
+3		0.02	503	12.7
+6		0.02	489	12.6
3:24	C-2	0.05	550	20.6
+3		0.05	571	20.8
+6		0.05	571	20.8
3:30	C-1	0.04	550	18.4
+3		0.04	548	18.4
+6		0.04	545	18.4
3:41 PM	D-2	0.03	562	16.0
+3		0.03	573	16.1
+6		0.03	576	16.2
3:47	D-1	0.03	572	16.1
+3		0.03	559	16.0
+6		0.03	558	16.0
3:54	E-2	0.05	540	20.5
+3		0.05	558	20.7
+6		0.05	565	20.8
4:00	E-1	0.04	563	18.6
+3		0.04	549	18.4
+6		0.04	552	18.4
LEAK CHECK = 0.00 CFM @ 9 in. Hg				
PURGE WITH 10 CF N_2				
$P_{Barometric}$ = 29.83 in. Hg				
P_{Static} = Negligible				
P_{Stack} = 29.83 in. Hg				

TRAVERSE VELOCITY 17.1 FT./SEC.

REFERENCE POINT VELOCITY _____ FT./SEC.

Pressure Correction Factor 1.00

PITOT CORRECTION FACTOR 0.852

GAS DENSITY CORRECTION FACTOR 0.99

CORRECTED TRAVERSE VELOCITY -

17.1 x 1.00 x 0.852 x 0.99 = 14.4 FT./SEC.

AREA OF FLUE 26.4 SQ. FT. AV. FLUE TEMP. 554 °F.

VOL. = 14.4 FT./SEC. x 26.4 SQ. FT. x 60 = 22,800 CFM

VOL. = 22,800 CFM $\times \frac{530^{\circ}R}{1014^{\circ}R} \times \frac{29.83 in.Hg}{29.92 in.Hg}$ = 11,900 SCFM

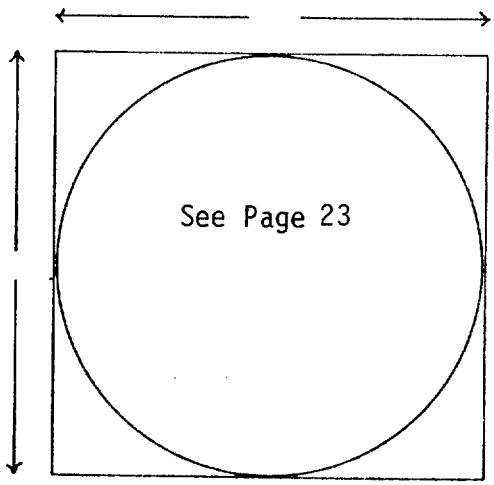

ER-AQ-037
2/73

COMMONWEALTH OF PENNSYLVANIA
DEPARTMENT OF ENVIRONMENTAL RESOURCES
BUREAU OF AIR QUALITY AND NOISE CONTROL

TEST NO. 0380 C

CALCULATION SHEET

NAME OF FIRM	DATE
West Chester State College, West Chester, PA	2/4/80

SAMPLE STATION: Sampling ports located in duct approx. 4 feet downstream of Buell Collector (Boiler No. 4)

COLLECTION TRAIN FOR	SAMPLE POINT	SAMPLE NOZZLE DIA.
Particulate	A,B,C,D,E (2, 1)	0.562 inch
TOTAL WGT. COLLECTED (GMS)	**CONDENSATE CC.**	
0.3142	26	

CONDENSATE: .~~0026~~ x 0.0474 x 26 = 1.2 CF

METER CORR. 49.4 x 530/567 x 29.99/29.92 = 46.3 DSCF

CONCENTRATION $\frac{0.3142 \text{ GM} \times 15.43}{46.3 \text{ DSCF}}$ = 0.105 GR/DSCF

CALCULATED LOSS: $\frac{0.105 \text{ GR/DSCF}}{7000} \times 9{,}700 \text{ } D_{SCFM} \times 60$ = 8.7 LBS/HR

CALCULATED LOSS: $\frac{8.7 \text{ lbs./hr.}}{21.7 \text{ mm BTU/hr.}}$ = 0.40 LBS./MILLION BTUs

SAMPLING POINT	TIME	Meter CU. FT.	Line VAC IN. HG	Meter Avg. T °F.	Orifice ΔH in. H_2O	SAMPLING POINT	TIME	Meter CU. FT.	Line VAC IN. HG	Meter Avg. T °F.	Orifice ΔH in. H_2O
LEAK CHECK = 0.01 CFM @ 10 in. Hg											
A-2	2:48 PM	914.0	3.5	94	1.7	D-2	3:41 PM	942.9	5.5	110	1.9
	+3	916.0	3.5	96	1.7		+3	945.0	5.5	110	1.9
	+6	918.2	3.5	99	1.7		+6	947.4	5.5	111	1.9
A-1	2:54	918.2	3.2	99	1.3	D-1	3:47	947.4	5.5	111	1.9
	+3	920.0	3.2	102	1.3		+3	949.7	5.5	112	1.9
	+6	921.9	3.2	102	1.3		+6	952.0	5.5	112	1.9
B-2	3:10	921.9	5.8	101	2.8	E-2	3:54	952.0	7.6	112	2.8
	+3	924.7	5.8	101	2.8		+3	954.9	7.6	113	2.8
	+6	927.6	5.8	103	2.8		+6	957.9	7.6	114	2.8
B-1	3:16	927.6	4.0	103	1.3	E-1	4:00	957.9	7.5	114	2.5
	+3	929.4	4.0	106	1.3		+3	960.4	7.5	115	2.5
	+6	931.2	4.0	106	1.3		+6	963.4	7.5	115	2.5
C-2	3:24	931.2	6.8	106	2.9	TOTAL	60 MIN	49.4	AVG	107	2.2
	+3	934.2	6.8	108	2.9	LEAK CHECK = 0.0 CFM @ 9 in. Hg					
	+6	937.2	6.8	110	2.9	PURGE WITH 10 CF N_2					
C-1	3:30	937.2	6.7	110	2.7						
	+3	940.1	6.7	111	2.7						
	+6	942.9	6.7	112	2.7						

HAP - 5686

COMMONWEALTH OF PENNSYLVANIA
DEPARTMENT OF HEALTH
AIR POLLUTION CONTROL

TEST NO. 0380 F

GAS VOLUME DATA
Sampling Traverse

NAME OF FIRM: West Chester State College, West Chester, PA

DATE: 2/5/80

SAMPLE STATION: Sampling portslocated in duct approx. 4 feet downstream of Buell Collector (Boiler No. 4)

TIME	POINT	V. H.	T °F.	VEL FT/SEC	TIME	POINT	V. H.	T °F.	VEL FT/SEC
LEAK CHECK = 0.00 CFM @ 10 in. Hg									
10:03 AM	E-2	0.06	550	22.6	10:49 AM	B-2	0.06	545	22.5
+3		0.06	588	23.0	+3		0.06	601	23.1
+6		0.06	591	23.0	+6		0.06	599	23.1
10:09	E-1	0.05	589	21.0	10:55	B-1	0.02	582	13.2
+3		0.02	570	13.2	+3		0.02	564	13.1
+6		0.03	563	16.1	+6		0.02	563	13.1
10:18	D-2	0.06	565	22.7	11:03	A-2	0.06	550	22.6
+3		0.06	590	23.0	+3		0.06	585	23.0
+6		0.06	598	23.1	+6		0.06	590	23.0
10:24	D-1	0.02	574	13.2	11:09	A-1	0.03	567	16.1
+3		0.02	532	12.9	+3		0.03	536	15.8
+6		0.02	497	12.7	+6		0.03	555	16.0
10:32	C-2	0.06	540	22.5	LEAK CHECK = 0.0 CFM @ 14 in. Hg				
+3		0.06	589	23.0	PURGE WITH 10 CF N_2				
+6		0.06	603	23.2	$P_{Barometric}$ = 29.92 in. Hg				
10:38	C-1	0.02	584	13.2	P_{Static} = Negligible				
+3		0.02	558	13.1	P_{Stack} = 29.92 in. Hg				
+6		0.02	547	13.0					

TRAVERSE VELOCITY 18.6 FT./SEC.

REFERENCE POINT VELOCITY _____ FT./SEC.

Pressure Correction Factor
~~XXXXXXXXXXXXXXXXXXXXXXXXXXX~~ 1.00

PITOT CORRECTION FACTOR 0.852

GAS DENSITY CORRECTION FACTOR 0.99

CORRECTED TRAVERSE VELOCITY-

18.6 x 1.00 x 0.852 x 0.99 = 15.7 FT./SEC.

AREA OF FLUE 26.4 SQ. FT. AV. FLUE TEMP. 569 °F.

VOL. = 15.7 FT./SEC. x 26.4 SQ. FT. x 60 = 24,900 CFM

VOL. = 24,900 CFM x $\frac{530^{o}R}{1029^{o}R}$ x $\frac{29.92 in.Hg}{29.92 in.Hg}$ = 12,800 SCFM

VOL. = 12,800 SCFM x (100 - 1.4)%(H_2O) = 12,600 DSCFM

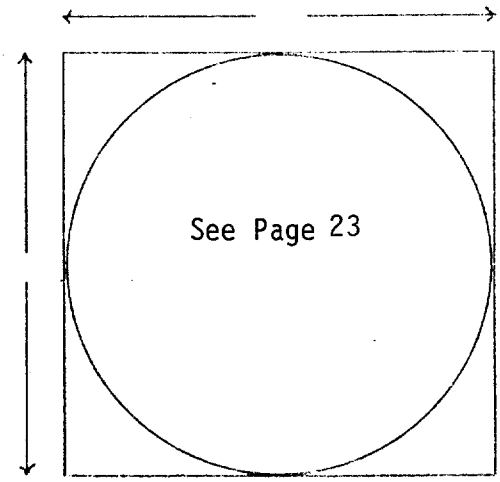

ER-AQ-037
2/73

COMMONWEALTH OF PENNSYLVANIA
DEPARTMENT OF ENVIRONMENTAL RESOURCES
BUREAU OF AIR QUALITY AND NOISE CONTROL

TEST NO. 0380 F

CALCULATION SHEET

NAME OF FIRM	DATE
West Chester State College, West Chester, PA	2/5/80

SAMPLE STATION
Sampling ports located in duct approx. 4 feet downstream of Buell Collector (Boiler No. 4)

COLLECTION TRAIN FOR	SAMPLE POINT	SAMPLE NOZZLE DIA.
Particulate	E,D,C,B,A, (2, 1)	0.562 inch
TOTAL WGT. COLLECTED (GMS)	**CONDENSATE CC.**	
0.4914	15	

CONDENSATE: .0026X = 0.0474 × 15 = 0.7 CF

METER CORR. 51.6 × 530/561 × 30.09/29.92 = 49.0 DSCF

CONCENTRATION $\frac{0.4914}{49.0}$ GM × 15.43 / DSCF = 0.155 GR/DSCF

CALCULATED LOSS: $\frac{0.155 \text{ GR/DSCF}}{7000}$ × 12,600 D_{SCFM} × 60 = 16.7 LBS/HR

CALCULATED LOSS: $\frac{16.7 \text{ lbs./hr.}}{23.6 \text{ mm BTU/hr.}}$ = 0.71 LBS./MILLION BTUs

SAMPLING POINT	TIME	Meter CU. FT.	Line VAC IN. HG	Meter Avg. T °F.	Orifice ΔH in. H_2O	SAMPLING POINT	TIME	Meter CU. FT.	Line VAC IN. HG	Meter Avg. T °F.	Orifice ΔH in. H_2O
LEAK CHECK = 0.00 CFM @ 10 in. Hg											
E-2	10:03 AM	963.8	7.0	87	3.5	B-2	10:49 AM	994.1	9.8	104	3.2
	+3	967.1	7.0	90	3.5		+3	997.2	10.0	106	3.2
	+6	970.2	7.0	92	3.5		+6	1000.3	10.4	106	3.2
E-1	10:09	970.2	6.8	92	2.8	B-1	10:55	1000.3	6.2	106	1.3
	+3	973.1	4.0	95	1.3		+3	1002.4	6.2	105	1.3
	+6	975.1	4.0	94	1.3		+6	1004.2	6.2	106	1.3
D-2	10:18	975.1	7.5	94	3.2	A-2	11:03	1004.2	11.0	106	3.2
	+3	978.1	7.5	98	3.0		+3	1007.4	11.0	107	3.2
	+6	981.1	7.5	100	2.9		+6	1010.5	11.5	108	3.2
D-1	10:24	981.1	4.5	100	1.0	A-1	11:09	1010.5	8.5	108	2.0
	+3	982.8	4.5	99	1.0		+3	1012.9	8.5	106	2.0
	+6	984.4	4.5	100	1.0		+6	1015.4	8.5	106	2.0
C-2	10:32	984.4	8.8	100	3.0	TOTAL	60 MIN	51.6	AVG	101	2.3
	+3	987.4	8.8	102	3.0	LEAK CHECK = 0.00 CFM @ 14 in. Hg					
	+6	990.5	9.8	104	3.2	PURGE WITH 10 CF N_2					
C-1	10:38	990.5	5.3	104	1.3						
	+3	992.3	5.3	104	1.3						
	+6	994.1	5.3	104	1.3						

COMMONWEALTH OF PENNSYLVANIA
DEPARTMENT OF ENVIRONMENTAL RESOURCES
BUREAU OF AIR QUALITY CONTROL

MOISTURE CALCULATIONS

DATE 2/4 & 5/80

1. PERCENT WATER VAPOR IN GASES	TEST NUMBERS				
	0380 C	0380 F			
A. Gas pressure at meter (Inches HG + ΔH)	29.99	30.09			
B. Vapor pressure of water at impinger temp. (In. HG.)					
C. Vol. of metered gas (Cu. Ft.) Dry Std.	46.3	49.0			
D. Vol. of water vapor metered (BC/A, Cu. Ft.)					
E. Vol. of water vapor condensed (Cu. Ft.) Std.	1.2	0.7			
F. Total vol. of water vapor in gas sample (D + E, Cu. Ft.) Std.	1.2	0.7			
G. Total vol. of gas sample (C + E, Cu. Ft.) Std.	47.5	49.7			
H. % water vapor in sampled gas (100 F/G)	2.5	1.4			
I. % water vapor (Average Value)	4.0	4.0			
2. ORSAT ANALYSIS – DRY BASIS	Fyrite	Fyrite			
A. CO_2 (%)	8.0	6.5			
B. CO (%)					
C. O_2 (%)	12.5	11.0			
D. N_2 (%)	79.5	82.5			

LABORATORY RESULTS:

	0380C		0380 F	
	Wt. in Grams			
	Insoluble	Soluble	Insoluble	Soluble
Nozzle, Probe, Front Half Filter Holder	0.0184	0.0145	0.0249	0.0829
Glass Fiber Filter	0.2804	(#50616)	0.3826	(#50615)
Back Half Filter Holder, Impingers, Connecting Glassware	0.0009	0.0499*	0.0010	0.0520*
Total	0.3142		0.4914	

Condensate Volume: Impingers (ml)	19.0	7
Silica Gel (gms)	7.0	8
Total (cc)	26.0	15

*Not included in total weight

ER-AQ-038
2/73

COMMONWEALTH OF PENNSYLVANIA
DEPARTMENT OF ENVIRONMENTAL RESOURCES
BUREAU OF AIR QUALITY AND NOISE CONTROL

PROCESS DATA

TEST NUMBER 0380 C, F

DATE 2/4 & 5/80

NAME OF FIRM
West Chester State College, West Chester, PA

DESCRIPTION OF EQUIPMENT TESTED AND OPERATION COVERED IN TEST
Keeler CP Boiler No. 4 with Williamson traveling chain grate stoker

SAMPLING STATION LOCATION
Sampling ports located in duct approx. 4 feet downstream of Buell Collector

LENGTH OF PROCESS CYCLE Continuous

TIME CYCLE BEGINS _____ ENDS _____

TIME OF TEST: BEGINS 0380 C 2:48 PM / 0380 F 10:03 AM

ENDS 4:06 PM / 11:15 AM

CYCLE COVERAGE Complete

RAW MATERIAL CHARGED DURING THIS TIME:

		Test Nos. 0380 C	0380 F
MATERIAL		WT(LBS.)	
MATERIAL		WT(LBS.)	
MATERIAL		WT(LBS.)	
MATERIAL		WT(LBS.)	
MATERIAL		WT(LBS.)	
SOLID FUEL CHARGED	Buckwheat No. 3 Anthracite Coal	WT(LBS.)	4,248* 3,341+
TOTAL POUNDS		WT(LBS.)	

COLLECTION EQUIPMENT TYPE
Buell Mechanical Collector

PLANT OFFICIAL AND TITLE
Albert Sykes, Institutional Maintenance Supervisor

ADDITIONAL COMMENTS
*Readings taken between 2:05 PM and 4:36 PM

+Readings taken between 9:31 AM and 11:20 AM

Coal Analysis:

% Sulfur	0.86
% Ash	10.44
Heating Value	12,873 BTU/lb.

West Chester State College

West Chester, PA

Process Data

Boiler No. 4

Test No. 0380 C, F

Date: 2/4 & 5/80

0380 C

Time	Steam Load lbs./hr.	Steam Integrator (x400)	Steam Pressure PSIG
2:05 PM	16,000	229834	130
2:30	16,000	229850	130
2:45	16,000	229862	130
3:00	15,000	229873	130
3:15	14,500	229882	130
3:30	15,000	229890	130
3:45	15,500	229901	130
4:00	15,500	229911	130
4:17	15,500	229923	130
4:36	14,500	229934	130

0380 F

Time	Steam Load lbs./hr.	Steam Integrator (x400)	Steam Pressure PSIG
9:31 AM	20,000	230652	130
10:00	19,500	230678	130
10:30	17,000	230699	130
11:00	16,000	230721	130
11:30	15,000	230741	130

ER-AQ-038
2/73

COMMONWEALTH OF PENNSYLVANIA
DEPARTMENT OF ENVIRONMENTAL RESOURCES
BUREAU OF AIR QUALITY AND NOISE CONTROL

TEST NO. 0380 A, B, C

SUMMARY

DATE 2/4/80

NAME OF FIRM

West Chester State College, West Chester, PA

Description of Equipment Tested and Operation Covered in Test

Keeler CP Boiler No. 1 with Illinois chain grate stoker and Keeler CP Boiler Nos. 3 and 4 with Williamson traveling grate stokers.

	0380 A	0380 B	0380 C
Sampling Station Location	A (1-12)	D,C,B,A (3-1)	A,B,C,D,E (2, 1)
Average Gas Velocity (Ft./Sec.)	10.9	7.8	11.8
Area of Flue at Sampling Station ($ft.^2$)	27.0	18.6	26.4
Flue Gas Volume (SCFM) Dry	9,300	4,600	9,700
Sample Nozzle Diameter (In.)	0.626	0.754	0.562
Sampling Rate at Meter (CFM) Dry (AVG)	0.785	0.820	0.823
Total Sampling Time (Minutes)	60	60	60
Avg. ΔH Orifice, in. H_2O	1.7	2.1	2.2
Meter Temperature – Average (°F)	109	108	107
Volume of Gas Sampled, Meter Conditions (CF) Dry	47.1	49.2	49.4
Water Vapor Condensate (CC)	31	26	26
Water Vapor Volume Std. Conditions (SCF)	1.5	1.2	1.2
Moisture in Gases (%)	3.3	2.5	2.5
Total Sampled Volume, Std. Conditions (SCF)	45.4	47.2	47.5
Corrected Sample Volume (SCF) Dry	43.9	46.0	46.3
Type Material Collected	Particulate	Particulate	Particulate
Total Weight Collected (GMS)	0.2058	0.2569	0.3142
Concentration Grains/SCF Dry	0.072	0.086	0.105
Calculated Loss (Lbs./Hr.)	5.7	3.4	8.7
% Isokinetic	102	98.1	102.1
Calculated Loss (lbs./mm BTU)	0.28	0.30	0.40
Combined Loss (lbs./mm BTU)	0.33		

REGULATORY STANDARD

Type of Material

Particulate

Allowable Loss (Lb./~~HX~~ mm BTU)

0.40 Chapter 123 § 123.11(a)(2)

COLLECTOR EFFICIENCY

Total Material to Collector (Lbs./Hr.)

Total Loss to Atmosphere (Lbs./Hr.)

Total Material Collected

COMMENTS

Approved By

L. Blaine DeHaven, P.E.

Test Conducted By

Richard St. Louis

Test Computed and Checked By

Richard St. Louis

ER-AQ-038
2/73

COMMONWEALTH OF PENNSYLVANIA
DEPARTMENT OF ENVIRONMENTAL RESOURCES
BUREAU OF AIR QUALITY AND NOISE CONTROL

TEST NO. 0380 D, E, F

SUMMARY

DATE 2/5/80

NAME OF FIRM
West Chester State College, West Chester, PA

Description of Equipment Tested and Operation Covered in Test
Keeler CP Boiler No. 1 with Illinois chain grate stoker and Keeler CP Boiler Nos. 3 and 4 with Williamson traveling grate stokers

	0380 D	0380 E	0380 F
Sampling Station Location	A (1-12)	D,C,B,A (3-1)	A,B,C,D,E (2, 1)
Average Gas Velocity (Ft./Sec.)	11.5	9.7	15.7
Area of Flue at Sampling Station ($ft.^2$)	27.0	18.6	26.4
Flue Gas Volume (SCFM) Dry	9,800	5,700	12,600
Sample Nozzle Diameter (In.)	0.626	0.754	0.562
Sampling Rate at Meter (CFM) Dry (AVG)	0.820	0.962	0.860
Total Sampling Time (Minutes)	60	60	60
Avg. ΔH Orifice, in. H_2O	1.9	2.9	2.3
Meter Temperature – Average (°F)	101	100	101
Volume of Gas Sampled, Meter Conditions (CF) Dry	49.2	57.7	51.6
Water Vapor Condensate (CC)	22	26	15
Water Vapor Volume Std. Conditions (SCF)	1.0	1.2	0.7
Moisture in Gases (%)	2.1	2.1	1.4
Total Sampled Volume, Std. Conditions (SCF)	47.7	56.2	49.7
Corrected Sample Volume (SCF) Dry	46.7	55.0	49.0
Type Material Collected	Particulate	Particulate	Particulate
Total Weight Collected (GMS)	0.3185	0.3245	0.4914
Concentration Grains/SCF Dry	0.105	0.091	0.155
Calculated Loss (Lbs./Hr.)	8.8	4.4	16.7
% Isokinetic	100.8	95.5	99.2
Calculated Loss (lbs./mm BTU)	0.37	0.31	0.71
Combined Loss (lbs./mm BTU)	0.48		

REGULATORY STANDARD

Type of Material
Particulate

Allowable Loss (Lb./~~Hr.~~ lbs./mm BTU)
0.40

Chapter 123 § 123.11(a)(2)

COLLECTOR EFFICIENCY

Total Material to Collector (Lbs./Hr.)

Total Loss to Atmosphere (Lbs./Hr.)

Total Material Collected

COMMENTS

Test Conducted By
Richard St. Louis RSL

Approved By
L. Blaine DeHaven, P.E. 5/7/80

Test Computed and Checked By
Richard St. Louis Richard St. Louis

WEST CHESTER STATE COLLEGE
WEST CHESTER, PA

DISCUSSION

Stack Test Nos. 0380 A, B, C, D, E and F were performed using standard procedures for the isokinetic collection of a particulate sample. Test Nos. A, B, and C were performed simultaneously in the outlet breechings of Boilers 1, 3, and 4 respectively on February 4, 1980 while Test Nos. D, E, and F were also performed simultaneously in the same boiler breechings on February 5, 1980.

Twelve point preliminary velocity traverses were performed on all three units to determine their respective velocity profile and volumetric flow rates for the first day of testing. The same twelve points, except for Boiler No. 4 where two points were found to have zero flow, were sampled for a total sampling period of sixty minutes per test. A preliminary velocity traverse was not performed on the second day of testing, thus the volumetric flow rates were determined from data recorded during the actual sampling program.

The test data for Stack Test Nos. 0380 A, B, and C indicate particulate emission rates of 0.28, 0.30 and 0.40 pounds per million BTU respectively resulting in a combined rate of 0.33 pounds per million BTU. The results of Stack Test No. 0380 D, E and F indicate emission rates of 0.37, 0.31, and 0.71 pounds per million BTU resulting in a combined emission rate of 0.48 pounds per million BTU.

The allowable particulate emission rate as determined by Chapter 123 Section 123.11(a)(2) is 0.40 pounds per million BTU.

The results of Stack Test Nos. 0380 A, B, C, D, E and F are representative of the emissions discharging into the main discharge plenum at the operating conditions of the boiler units at the time of the tests.