Note: This is a reference cited in *AP 42, Compilation of Air Pollutant Emission Factors, Volume I Stationary Point and Area Sources.* AP42 is located on the EPA web site at www.epa.gov/ttn/chief/ap42/

The file name refers to the reference number, the AP42 chapter and section. The file name "ref02_c01s02.pdf" would mean the reference is from AP42 chapter 1 section 2. The reference may be from a previous version of the section and no longer cited. The primary source should always be checked.

Anthracite Coal Combustion
AP-42 Sectic Chap 4
Reference Nc Ref 3

Reference 11

SOURCE SAMPLING OF ANTHRACITE COAL FIRED BOILERS

Shippensburg State College
Shippensburg, Pennsylvania

FINAL REPORT

Scott
Environmental Technology

SET 1498 01 0575

SOURCE SAMPLING OF ANTHRACITE COAL FIRED BOILERS

Shippensburg State College
Shippensburg, Pennsylvania

FINAL REPORT

Prepared for:

Environmental Protection Agency
National Air Data Branch
Research Triangle Park, North Carolins 27711

May 1975

SCOTT ENVIRONMENTAL TECHNOLOGY, INC.
Plumsteadville, Pennsyvlania 18949

TABLE OF CONTENTS

		Page
1.0	INTRODUCTION	1
2.0	SUMMARY AND DISCUSSION OF RESULTS	3
3.0	PROCESS DESCRIPTION & OPERATION	9
4.0	LOCATION OF SAMPLING POINTS	12
5.0	SAMPLING AND ANALYTICAL PROCEDURES	14

APPENDICES

Appendix A - Complete Particulate Results with Example Calculation

Appendix B1 - Field Data - Boiler #1

Appendix B2 - Field Data - Boiler #2

Appendix C - Laboratory Report

Appendix D1 - Particle Sizing Analysis - Boiler #1

Appendix D2 - Particle Sizing Analysis - Boiler #2

Appendix E - Test Log

Appendix F - Project Participants

1.0 INTRODUCTION

In order to assist in the compilation of Air Pollution Emission Factors from anthractire coal-fired boilers, the National Air Data Branch of the Environmental Protection Agency contracted Scott Environmental Technology to perform source sampling at the Shippensburg State College boiler plant in Shippensburg, Pennsylvania.

The boiler plant consists of three anthracite coal-fired boilers which are operated independently to provide steam at about 80 psi upon demand by the school. This is used for heating, air conditioning and hot water. Each of the three boilers can be operated at full load at any time to facilitate testing providing there is sufficient demand.

The boilers are rated at 25,000 lbs/hr of steam and are fired by Keeler travelling grate furnaces burning pulverized anthracite coal. Boilers #1 and #2 exhaust into fly ash hoppers and through induced draft fans directly to the atmosphere. Boiler #3 has a Whirlex cyclone installed before the fan. No tests were conducted on Boiler #3. All three boilers vent to the atmosphere through identical conical stacks located on the roof of the boiler plant building. The diameter of the stacks at the test location is 44.75 inches.

The task order called for three one-hour (minimum) tests to be performed on each of Boilers #1 and #2. However, on each boiler stack, the first two runs were for a duration of sixty-four minutes while the last run was conducted for eighty minutes. Particulate samples were collected according to the EPA Method 5 , "Determination of Particulate Emissions from Stationary Sources." A cyclone assembly was included in the glass train, and water-wash and acetone-wash of the back half of the sampling train was also included in the sample analysis. During each run, two NO_x samples were recovered according to the EPA Method 7, "Determination of Nitrogen Oxide Emissions from Stationary Sources". Also, several grab gas samples were extracted during each test for analysis of carbon dioxide, oxygen, carbon monoxide, excess air and dry molecular weight. The analysis was performed using an Orsat apparatus. In addition, carbon monoxide levels were determined using an Ecolyzer Model 2800. Very low carbon monoxide concentrations were detected with this unit (5 ppm for Boiler #1 and 2-3 ppm for Boiler #2). The Orsat apparatus indicated zero or negligible carbon monoxide concentration levels.

SET 1498 01 0575

During each test run, four coal samples were taken as the coal entered the travelling grate. A proximate analysis and calorific value of the coal was determined from a composite sample of the coal collected in each test run. One ultimate analysis on the coal sample used in each boiler was also determined.

Particle sizing on the samples obtained from each boiler were analyzed thus:

(1) particle sizing on the cyclone catch from a composite of Runs #1 and #3.

(2) particle sizing on the acetone front-wash catch from a composite of Runs #1 and #3.

(3) particle sizing on the cyclone + acetone wash from a composite of Runs #1 and #3.

The relative differential and cumulative weight percent versus equivalent spherical diameter graphs for these samples are presented in Appendices D-1 and D-2. The samples were dispersed by Type IIA dispersant in 50/50 Isoton/Glycerine electrolyte and ultrasoniced for 60 seconds. The analysis used a Model TA Coulter Counter.

All catches in Run #2 from both boilers were returned to EPA for trace analysis.

During each test run, periodic monitoring of the steam flow rate and coal feed rate was also performed.

The test team was comprised of three Scott employees. Three complete tests were performed on Boiler #1 on March 25, 1975, and three tests on Boiler #2 on March 26, 1975.

2.0 SUMMARY AND DISCUSSION OF RESULTS

A summary of test results on Boiler #1 is presented in Table 1 (British units) and Table 2 (Metric units). Results on Boiler #2 are summarized in Table 3 (British units) and Table 4 (Metric units). Tables 5 and 6 summarize the nitrogen oxide emissions from Boiler #1 and #2 respectively.

All three runs on Boilers #1 and #2 showed good replication with respect to stack conditions and particulate loading. The only discrepancy detected was the Orsat analysis of Run 1 on Boiler #2. The unusually high excess air value is due to the very low carbon dioxide concentration and high oxygen content analyzed. A leak or contamination in the gas sample bag could be a likely cause for this variation.

SET 1498 01 0575

TABLE 1 SUMMARY OF PARTICULATE RESULTS - BOILER # 1
(British units)

Run Number:	1	2	3	Average
Date	3/25/75	3/25/75	3/25/75	
Volume of gas sampled - DSCF	48.65	50.48	61.71	53.61
Percent Moisture by Volume	3.5	3.4	3.8	3.6
Average stack Temp. - °F	472	462	465	466
Average Stack Velocity - fpm	1410	1438	1408	1419
Stack Volumetric Flow Rate - DSCFM	8177	8426	8200	8268
Stack Volumetric Flow Rate - ACFM	15405	15710	15383	15499
Percent Isokinetic	98.9	97.4	98.8	98.4
Percent Excess Air	76.4	71.4	85.1	77.6
Coal Feed Rate - ton/hr	1.075	0.986	0.900	0.987
Coal Calorific Value - BTU/lb	11843	11975	11939	11919
Coal Ash Content - weight %	10.70	10.60	10.75	10.68
Particulate - probe, cyclone & filter catch				
mg	582.2	471.3	557.4	537.0
gr/DSCF	0.1950	0.1554	0.1492	0.1664*
gr/ACF	0.1035	0.0834	0.0796	0.0888*
lb/hr	13.67	11.22	10.49	11.79
lb/ton feed	12.72	11.38	11.66	11.92
lb/million BTU	0.537	0.475	0.488	0.500
Emission Factor[a] - lb/ton	1.19A	1.07A	1.08A	1.11A
Particulate - total catch				
mg	625.6	562.3	612.0	600.0
gr/DSCF	0.2096	0.1854	0.1639	0.1863*
gr/ACF	0.1113	0.0995	0.0874	0.0994*
lb/hr	14.69	13.39	11.52	13.2
lb/ton feed	13.67	13.58	12.80	13.35
lb/million BTU	0.577	0.567	0.536	0.560
Emission Factor[a] - lb/ton	1.28A	1.28A	1.19A	1.25A

Standard conditions: 70°F; 29.92 in.Hg.
(a) 'A' is the ash content expressed as weight percent
* Weighted averages

SET 1498 01 0575

TABLE 2 SUMMARY OF PARTICULATE RESULTS - BOILER # 1
(Metric Units)

Run Number:	1	2	3	Average
Date	3/25/75	3/25/75	3/25/75	
Volume of gas sampled - Nm^3	1.377	1.429	1.746	1.517
Percent Moisture by Volume	3.5	3.4	3.8	3.6
Average Stack Temp. - °C	244	239	241	241
Average Stack Velocity - m/sec	7.28	7.42	7.27	7.32
Stack Volumetric Flow Rate - Nm^3/min.	231.4	238.5	232.1	234.0
Stack Volumetric Flow Rate - m^3/min.	436.0	444.6	435.3	438.6
Percent Isokinetic	98.9	97.4	98.8	98.4
Percent Excess Air	76.4	71.4	85.1	77.6
Coal Feed Rate - Mton/hr	0.975	0.894	0.816	0.895
Coal Calorific Value - kcal/kg	6584.7	6658.1	6638.1	6627.0
Coal Ash Content - weight %	10.70	10.60	10.75	10.68
Particulate - probe, cyclone & filter catch				
mg	582.2	471.3	557.4	537.0
mg/Nm^3	446.2	355.6	341.4	380.8*
mg/m^3	236.8	190.8	182.1	203.2*
kg/hr	6.20	5.09	4.76	5.35
kg/Mton feed	6.36	5.69	5.83	5.96
kg/Million kcal	0.966	0.855	0.879	0.900
Emission Factor[(a)] - kg/Mton	0.594A	0.537A	0.542A	0.558A
Particulate - total catch				
mg	625.6	562.3	612.0	600.0
mg/Nm^3	479.6	424.2	375.0	426.2*
mg/m^3	254.7	227.7	200.0	227.5*
kg/hr	6.66	6.07	5.23	5.99
kg/Mton feed	6.83	6.79	6.41	6.68
kg/million kcal	1.037	1.020	0.966	1.008
Emission Factor[(a)] - kg/Mton	0.638A	0.641A	0.596A	0.625A

Standard Conditions: 21.1°C and 76 mm Hg.
(a) 'A' is the ash content expressed as weight percent
* Weighted averages.

SET 1498 01 0575

TABLE 3 SUMMARY OF PARTICULATE RESULTS - BOILER # 2
(British Units)

Run Number:	1	2	3	Average
Date	3/26/75	3/26/75	3/26/75	
Volume of gas sampled - DSCF	45.68	44.96	62.28	50.97
Percent Moisture by Volume	3.6	3.3	3.3	3.4
Average stack Temp. - °F	519	507	517	514
Average Stack Velocity - fpm	1393	1333	1503	1410
Stack Volumetric Flow Rate - DSCFM	7814	7611	8498	7974
Stack Volumetric Flow Rate - ACFM	15210	14561	16413	15395
Percent Isokinetic	103.6	103.6	102.5	103.2
Percent Excess Air	162.5	87.7	99.2	93.5**
Coal Feed Rate - ton/hr	1.033	1.362	1.253	1.216
Coal Calorific Value - BTU/lb	12064	12091	12231	12129
Coal Ash Content - weight %	10.85	10.71	10.89	10.82
Particulate - probe, cyclone & filter catch				
mg	496.2	445.7	608.0	516.6
gr/DSCF	0.1658	0.1525	0.1513	0.1564*
gr/ACF	0.0852	0.0797	0.0783	0.0810*
lb/hr	11.10	9.95	11.02	10.69
lb/ton feed	10.75	7.31	8.79	8.95
lb/million BTU	0.445	0.302	0.360	0.369
Emission Factor[a] - lb/ton	0.991A	0.683A	0.807A	0.827A
Particulate - total catch				
mg	535.9	464.9	667.2	556.0
gr/DSCF	0.1791	0.1591	0.1660	0.1681*
gr/ACF	0.0920	0.0832	0.0860	0.0871*
lb/hr	11.99	10.38	12.09	11.49
lb/ton feed	11.61	7.62	9.65	9.63
lb/million BTU	0.481	0.315	0.394	0.397
Emission Factor[a] - lb/ton	1.07A	0.711A	0.886A	0.889A

Standard conditions: 70°F; 29.92 in.Hg.
(a) 'A' is the ash content expressed as weight percent
* Weighted averages
** Averaged over Runs 2 & 3

SET 1498 01 0575

TABLE 4 SUMMARY OF PARTICULATE RESULTS - BOILER # 2
(Metric Units)

Run Number:	1	2	3	Average
Date	3/26/75	3/26/75	3/26/75	
Volume of gas sampled - Nm^3	1.293	1.272	1.763	1.443
Percent Moisture by Volume	3.6	3.3	3.3	3.4
Average Stack Temp. - °C	271	264	269	268
Average Stack Velocity - m/sec	7.19	6.88	7.76	7.28
Stack Volumetric Flow Rate - Nm^3/min.	221.1	215.4	240.5	225.7
Stack Volumetric Flow Rate - m^3/min.	430.4	412.1	464.5	435.7
Percent Isokinetic	103.6	103.6	102.5	103.2
Percent Excess Air	162.5	87.7	99.2	93.5**
Coal Feed Rate - Mton/hr	0.937	1.236	1.137	1.103
Coal Calorific Value - kcal/kg	6707.6	6722.6	6800.4	6743.5
Coal Ash Content - weight %	10.85	10.71	10.89	10.82
Particulate - probe, cyclone & filter catch				
mg	496.2	445.7	608.0	516.6
mg/Nm^3	379.4	348.9	346.2	357.9*
mg/m^3	194.9	182.4	179.2	185.4*
kg/hr	5.03	4.51	5.00	4.85
kg/Mton feed	5.38	3.66	4.40	4.48
kg/million kcal	0.800	0.543	0.647	0.663
Emission Factor[(a)] - kg/Mton	0.496A	0.342A	0.494A	0.414A
Particulate - total catch				
mg	535.9	464.9	667.2	556.0
mg/Nm^3	409.8	364.0	379.8	384.6*
mg/m^3	210.5	190.4	196.8	199.3*
kg/hr	5.44	4.71	5.48	5.21
kg/Mton feed	5.81	3.81	4.83	4.82
kg/million kcal	0.866	0.567	0.709	0.714
Emission Factor[(a)] - kg/Mton	0.535A	0.356A	0.444A	0.445A

Standard Conditions: 21.1°C and 76 mm Hg.
(a) 'A' is the ash content expressed as weight percent
* Weighted averages.
** Averaged over Runs 2 & 3

TABLE 5 SUMMARY OF NITROGEN OXIDES EMISSIONS - BOILER #1

	Test Time	NO_x Sampled @	NO_x ppm	NO_x (as NO_2) lb/hr	NO_x (as NO_2) lb/million BTU	NO_x (as NO_2) lb/ton feed
Run 1	0824-0937	0900	165.2	9.68	0.380	9.00
		0940	152.0	8.91	0.350	8.29
Run 2	1056-1202	1055	96.6	5.83	0.247	5.91
		1138	109.4	6.61	0.280	6.70
Run 3	1405-1541	1430	139.6	8.20	0.382	9.10
		1510	215.5	12.66	0.589	14.07
Average			146.4	8.65	0.371	9.96

TABLE 6 SUMMARY OF NITROGEN OXIDES EMISSIONS - BOILER #2

	Test Time	NO_x Sampled @	NO_x ppm	NO_x (as NO_2) lb/hr	NO_x (as NO_2) lb/million BTU	NO_x (as NO_2) lb/ton feed
Run 1	0847-0954	0853	165.4	9.26	0.372	8.96
		0955	87.6	4.91	0.197	4.75
Run 2	1101-1207	1108	192.7	10.51	0.319	7.72
		1143	195.4	10.66	0.324	7.83
Run 3	1420-1542	1428	128.9	7.85	0.256	6.26
		1516	166.0	10.11	0.330	8.07
Average			156.0	8.88	0.300	7.27

SCOTT ENVIRONMENTAL TECHNOLOGY, INC.

3.0 PROCESS DESCRIPTION & OPERATION

The power plant at the Shippensburg State College campus in Shippensburg, Pennsylvania is comprised of three independently operated anthracite coal-fired boilers. All three boilers are rated at 25,000 lb/hr of steam and are fired by Keeler travelling grate furnaces (see Figure 1). Boilers #1 and #2 exhaust into fly ash hoppers and through induced draft fans directly to the atmosphere. Boiler #3 has a Whirlex cyclone installed before the fan. No tests were conducted on Boiler #3. All three boilers vent to the atmosphere through identical conical stacks located on the roof of the power plant building. The diameter of the stacks at the test location is 44.75 inches.

During testing, the coal feed rate and steam flow rate were monitored. The coal feed rate was monitored on weighing scales which measure the amount of coal dumped into the boiler hoppers. Steam flow rate was monitored on integrating counters as well as on circular recording charts. Tables 7 and 8 depict the coal feed rates and steam flow rates during testing of Boilers #2 and #3.

TABLE 7 PROCESS CONDITIONS

Shippensburg State College - Boiler #1

Run	Time	Coal Feed Rate (lb/hr)	Steam Flow Counter (lb/hr) Integrating Factor = 322	Steam Flow Chart (lbs/hr)
1	0814		962575	20000
	0850		962606	19500
	0912		962624	19500
	0946		962658.5	19800
	Average:	2149	17535	19700
2	1050		962711	17000
	1114		962730	18500
	1149		962760	17600
	1203		962771	17000
	Average:	1972	15880	17525
3	1404		962869	15800
	1436		962896	19500
	1518		962933	19000
	1543		962955	18800
	Average:	1800	16783	18275

TABLE 8 PROCESS CONDITIONS

Shippensburg State College - Boiler #2

Run	Time	Coal Feed Rate (lb/hr)	Steam Flow Counter (lb/hr) Integrating Factor = 322	Steam Flow Chart (lbs/hr)
	0821		766179	20500
1	0900		766213	17500
	0931		766242	23000
	1003		766272	21000
	Average:	2066	17615	20500
	1051		766308	16500
2	1120		766333	21000
	1150		766359	18600
	1205		766372	18500
	Average:	2723	16709	18650
	1412		766471	19000
3	1451		766505	18800
	1525		766534	18500
	1544		766550	20000
	Average:	2506	16590	19075

4.0 LOCATION OF SAMPLING POINTS

Boilers #1 and #2 are identical in size, rating and structural configuration. Both boilers vent their emissions through similar duct work and conical stacks located about 25 feet apart on the roof of the power plant building. The test location was available at a point 46" upstream from the conical section and 64" from the mouth of the stack. Sixteen points were traversed through two 3" ID ports located 90° apart. Figure 1 illustrates the test plane location and duct cross-section for Boilers #1 and #2.

FIGURE 1 SAMPLE PLANE LOCATION
BOILERS #1 & #2

Shippensburg State College
Shippensburg, PA

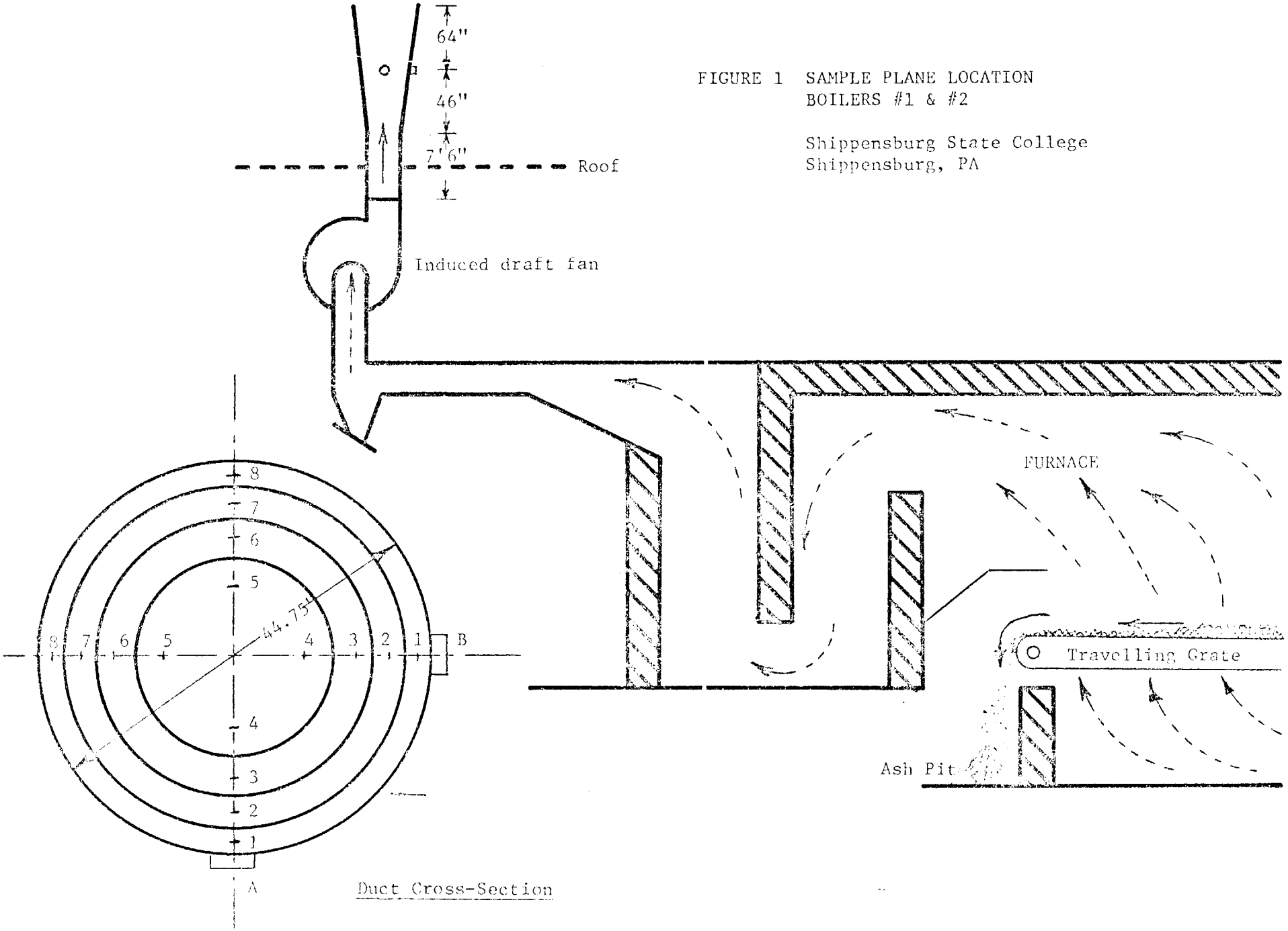

5.0 SAMPLING AND ANALYTICAL PROCEDURES

The sampling and analytical procedures for particulate emissions were done in accordance with EPA Method 5, "Determination of Particulate Emissions from Stationary Sources," as published in the Federal Register, Volume 36, No. 247, Tuesday, December 23, 1971. The only modification to this procedure was the retention of impinger catches for particulate gravimetric analysis.

Briefly, the method consisted of withdrawing a sample isokinetically from the stack through a heated probe into a filter and impinger train as shown in Figure 4. The sample volume is measured with a dry gas meter and isokinetic conditions were maintained by monitoring the stack gas velocity. After testing was completed, the train was thoroughly washed including the probe. A water and acetone wash were used and collected in separate containers. These washings were evaporated, dried and weighed along with the filter and summed to obtain the total weight of particulate matter collected.

Nitrogen Oxide emissions were sampled according to EPA Method 7, "Determination of Nitrogen Oxide Emissions from Stationary Sources". A two liter round bottomed flask was filled with 25 ml of absorbing solution and evacuated to about 28 inches of mercury. The flask was then attached to a heated glass lined probe containing a glass-wool filter, and the lines purged prior to extracting a gas sample for about fifteen seconds. After collecting a sample, the flask was shaken for about five minutes and set aside for at least sixteen hours. Final flask pressure was then monitored and the sample analyzed in the laboratory for NO_x concentration.

SET 1498 01 0575

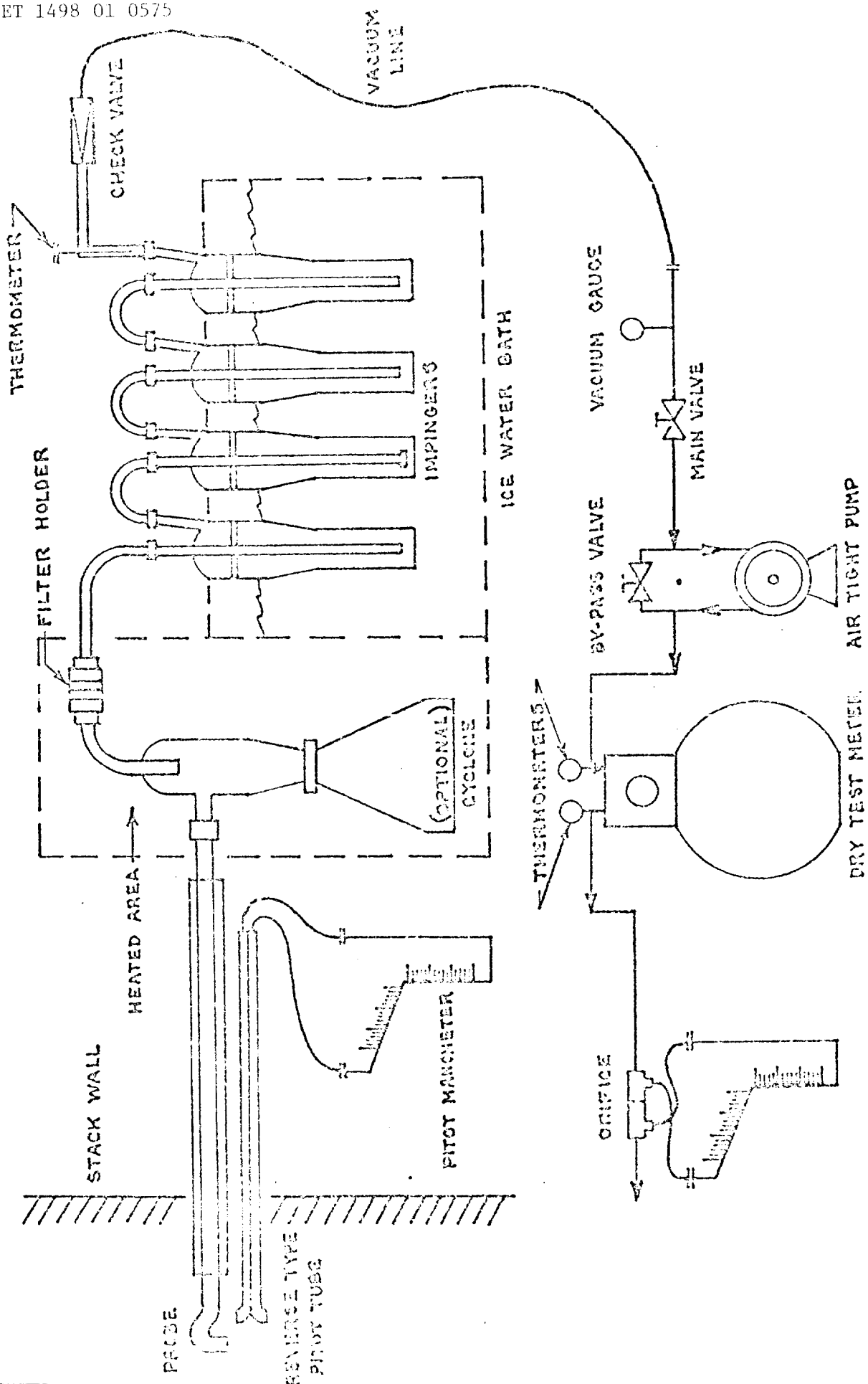

FIG. 4 PARTICULATE SAMPLING TRAIN