Note: This is a reference cited in *AP 42, Compilation of Air Pollutant Emission Factors, Volume I Stationary Point and Area Sources.* AP42 is located on the EPA web site at www.epa.gov/ttn/chief/ap42/

The file name refers to the reference number, the AP42 chapter and section. The file name "ref02_c01s02.pdf" would mean the reference is from AP42 chapter 1 section 2. The reference maybe from a previous version of the section and no longer cited. The primary source should always be checked.

AP42 Section:	1.1
Reference:	53
Title:	Field Chemical Emissions Monitoring Report: Site 122. Final Report, Task 1 Third Draft. EPRI RP9028-10. Southern Research Institute, Birmingham, Alabama. May, 1995. (EPRI Report)

EPRI

Final Report

FIELD CHEMICAL EMISSIONS MONITORING PROJECT: SITE 122

EPRI Project RP9028-10

June 1995

Prepared For:

Electric Power Research Institute
3412 Hillview Avenue
Palo Alto, California 94304

Prepared by:
Southern Research Institute
P.O. Box 55305
Birmingham, Alabama 35255

ABSTRACT

This report describes the results of a project to measure certain chemical emissions at the coal-fired steam plant known as PISCES Site 122. The investigation at Site 122 is a recent example of work in the program known as Field Chemical Emissions Monitoring (FCEM), which has been undertaken in the past by the Electric Power Research Institute (EPRI) and is now being sponsored by EPRI and individual utilities on a joint basis. This investigation was funded jointly by EPRI and the utility owning Site 122.

The three units of Site 122 are fired with an Eastern bituminous coal. Unit 1 was the subject of this investigation; like the other two units, Unit 1 operates with a boiler of the cyclone type, and it controls emissions with a cold-side electrostatic precipitator (ESP). The unit controls only emissions of particulate matter, with a cold-side ESP. It does not have any feature for controlling either sulfur or nitrogen oxides.

The emission measurements were concerned with the following components of the flue gas:

1) Trace metals

2) Acid gases

3) Aldehydes

4) Volatile organic compounds

5) Dioxins and furans

The first two types of emissions were measured at both the inlet and outlet of the ESP; mercury was also measured in the stack. Acid gases refer to compounds derived from nonmetals in the coal: fluorine, chlorine, sulfur, and phosphorus. The last three types of emissions (all organic compounds) were measured only at the ESP outlet.

Water and various solids in process streams (coal, bottom ash, and ESP-collected ash) were also sampled and analyzed for trace metals and the nonmetals that produce acid gases.

Analyses of flue gas streams at the inlet and outlet of the ESP indicate that with two exceptions the trace metals are controlled to the same degree, approximately, as the total particulate matter — about 93-94%. The level of control, however, is uncertain because

of the lack of accuracy in the data. Two trace metals not controlled as effectively as the balance occur to a significant degree in the vapor state; these elements are mercury and selenium. A substantial fraction of nearly each metal, in addition to that removed in the ESP, is discharged with the bottom ash or slag, which represents roughly 75% of the mass of ash in the coal.

The acid gases HF, HCl, and SO_2 escape essentially without control, in the gas exiting the plant through the stack. The fourth acid gas, H_3PO_4, on the other hand, is chemically neutralized by the ash, and the resulting phosphate is discharged primarily in the ash.

Neither aldehydes nor dioxins and furans occur at significant concentrations. Formaldehyde, for example, was found below a concentration of 1.0 $\mu g/Nm^3$. Dioxins and furans that contain the critical 2,3,7,8-tetrachloro substitution (which gives rise to acute toxicity) were present at or below a concentration of 0.03 $\mu g/Nm^3$. Benzene and toluene were found in the gas exiting the ESP at apparent concentrations of 12 and 3 $\mu g/Nm^3$. (Reference conditions for expressing gas concentrations are temperature, 0 °C; pressure, 1 atm; and O_2 concentration, 3%.)

CONTENTS

Section		Page
	Summary	S-1
1	Introduction	1-1
2	Site Description	2-1
	2.1 Facility Information	2-1
	2.2 Sampling Locations	2-6
	2.2.1 Process streams	2-6
	2.2.2 Flue gas streams	2-7
3	Results	3-1
	3.1 Sampling Schedule	3-1
	3.2 Data Treatment	3-1
	3.3 Coal	3-3
	3.3.1 Ultimate and proximate analyses	3-3
	3.3.2 Yields of fly ash and combustion gases	3-3
	3.3.3 Concentrations of trace metals	3-6
	3.4 Combustion Gases and Fly Ash	3-6
	3.5 Air Toxics at the ESP Inlet	3-9
	3.5.1 Trace metals	3-9
	3.5.2 Acid gases	3-14
	3.6 Air Toxics at the ESP Outlet	3-16
	3.6.1 Trace metals	3-16
	3.6.2 Acid gases	3-19
	3.6.3 Organic compounds	3-19
	3.7 Mercury at the Stack	3-23
	3.8 Emissions	3-27
4	Data Evaluation	4-1
	4.1 Process Operation	4-1
	4.2 Sample Collection	4-1
	4.3 Material Balances	4-6
	4.3.1 Trace metals	4-6
	4.3.2 Nonmetals	4-9
	4.4 Analytical Quality Control Results	4-11
	4.4.1 Trace metals	4-11
	4.4.2 Anions	4-21

CONTENTS (Concluded)

Section | Page

4.4.3 Aldehydes 4-21
4.4.4 Volatile organic compounds 4-21
4.4.5 Dioxins and furans 4-23

5 References 5-1

APPENDICES
A. Glossary of Technical Terms
B. Examples of Calculations
C. Sampling and Analytical Procedures
D. Process Stream Flow Rates and Characterization Data
E. Blank Data for Metals
F. Analytical Data on Inorganic Species (Trace Metals and Anions)
G. Analytical Data on Organic Species (Aldehydes, Volatile Organics, Dioxins, and Furans)
H. Plume Simulation Sampling (Description of Condensibles Air Dilution Train)
I. Analytical Data Not Used in Calculations: NAA Data for a Supplemental List of Metals

TABLES

Number		Page
1.1	FCEM Substances Investigated at Site 122	1-2
2.1	Features of Site 122	2-2
3.1	Analysis of Coal as Fired	3-4
3.2	Calculated Combustion Products of Coal	3-5
3.3	Unit Load, Coal Consumption Rate, and Related Quantities	3-7
3.4	Concentrations of Major Flue Gases	3-8
3.5	Data Regarding Suspended Particulate Matter	3-8
3.6	Flow Rates of Flue Gas and Fly Ash	3-10
3.7	Concentrations of Metals at the ESP Inlet	3-11
3.8	Concentrations of Metals in Solids in the Suspended State at the ESP Inlet and in the Hoppers of the ESP	3-13
3.9	Acid Gases at the ESP Inlet	3-15
3.10	Concentrations of Metals at the ESP Outlet	3-17
3.11	Concentrations of Metals in Solids in the Suspended State at the ESP Inlet and Outlet	3-18
3.12	Acid Gases at the ESP Outlet	3-20
3.13	Concentrations of Benzene and Toluene at the ESP Outlet	3-22
3.14	ESP Outlet Concentrations of Dioxins and Furans with 2,3,7,8 Substitution	3-24
3.15	ESP Outlet Concentrations of Dioxins and Furans by Group	3-25
3.16	Stack and Plume Concentrations of Mercury Vapor	3-28

TABLES (Continued)

Number		Page
3.17	Concentrations of Substances Estimated for the Stack at the Actual O_2 Concentration of Approximately 10%	3-29
3.18	Emissions in the Stack Flue Gas	3-30
4.1	Process Operational Data from Computerized Acquisition (Date: May 4, 1993)	4-2
4.2	Process Operational Data from Computerized Acquisition (Date: May 5, 1993)	4-3
4.3	Process Operational Data from Computerized Acquisition (Date: May 6, 1993)	4-4
4.4	Recovery of Trace Metals from the Coal in the Slag and the Flue Gas at the ESP Inlet	4-8
4.5	Recovery of Trace Metals from the Coal in Ash Collected in the ESP and Entrained at the ESP Outlet	4-10
4.6	Analytical Results for Standard Reference Materials	4-12
4.7	QA/QC Data from the First Analytical Series at Galbraith Laboratories	4-13
4.8	QA/QC Data from the Second Analytical Series at Galbraith Laboratories	4-14
4.9	QA/QC Data from Analyses of Multiple Metals Train Samples at Triangle Laboratories	4-15
4.10	QA/QC Data from Analyses of Process Solids at Triangle Laboratories	4-18
B.1	Calculation of Concentrations of Components of the Combustion Gas from Coal	B-4
C.1	Sampling Methods for Flue Gas Streams	C-3
C.2	Types of Samples Collected from Gas Streams in Different Locations	C-4
C.3	Analytical Methods for Coal	C-5

TABLES (Continued)

Number		Page
C.4	Methods of Analysis of Trace Metals by Selected Laboratories	C-6
C.5	Aldehydes and Ketones Identified by High Performance Liquid Chromatography	C-7
C.6	Volatile Organic Compounds Identifiable in Samples from VOST (Analysis at Southern Research Institute)	C-8
C.7	Volatile Organic Compounds Identifiable in Samples from VOST (Analysis at Lancaster Laboratories)	C-10
C.8	Dioxins and Furans Identifiable in Samples from the Modified Method 5 Sampling Train	C-11
D.1	Process Stream Flow Rates and Characterization Data	D-3
E.1	Comparison of Metal Amounts in the Sample and the Blank in One Run at the ESP Inlet (May 4, 1993)	E-3
E.2	Comparison of Metal Amounts in the Sample and the Blank in One Run at the ESP Outlet (May 4, 1993)	E-4
F.1	Metal and Anion Concentrations in Gas Streams Concentrations in $\mu g/Nm^3$ (3% O_2, 1 atm, 273.15 K)	F-3
F.2	Analyses of Coal Samples for Trace Metals	F-6
F.3	Analyses of Slag Samples for Trace Metals	F-7
F.4	Average Trace Metal Concentrations in the Slag	F-8
F.5	Trace Metal Concentrations in Water Streams	F-9
F.6	Analyses of ESP Ash Samples for Trace Metals	F-10
F.7	Average Trace Metal Concentrations in ESP-Collected Ash	F-11
F.8	Anion Concentrations in Solids	F-12
F.9	Acid Gas Concentrations Equivalent to Anion Concentrations in Fly Ash at the ESP Inlet	F-12

TABLES (Concluded)

Number		Page
G.1	Observed Quantities of Aldehydes and Ketones	G-3
G.2	Synapsis of Data on Benzene and Toluene	G-4
G.3	Observed Quantities of Volatile Organic Compounds in VOST Samples Analyzed at Southern Research Institute	G-5
G.4	Quantities of Volatile Organic Compounds in VOST Samples Analyzed at Lancaster Laboratories	G-6
G.5	Observed Quantities of Individual Dioxins and Furans	G-9
G.6	Observed Quantities of Groups of Dioxins and Furans	G-10
I.1	Supplemental Data from NAA at the University of Missouri-Columbia	I-3

FIGURES

Number		Page
2.1	Sampling Locations	2-4
2.2	Electrical Sectionalization of A and B Electrical Precipitators	2-5
H.1	Schematic of Condensibles Air Dilution Train	H-4

Section 1

INTRODUCTION

This report discusses an investigation of certain inorganic and organic substances that are found in the process streams and emissions of a coal-burning electric power plant. The specific plant under consideration is PISCES Site 122. This investigation was jointly sponsored by the owning utility and the Electric Power Research Institute (EPRI); it was administered by EPRI under RP9028-10. The investigation was part of EPRI's Field Chemical Emissions Monitoring (FCEM) Project, which provides data for determining the fate and control of the types of substances investigated at Site 122.

Southern Research Institute (SRI) served as the principal research contractor. Several commercial laboratories and one university laboratory provided assistance in sample analysis under purchase order from SRI. Sampling at the power plant was coordinated with another study dealing specifically with mercury, which was being undertaken by a different organization under direct contract with the utility.

FCEM investigations are concerned with process streams and emissions in electric power plants of different configurations with respect to fuel type, firing method, and emission control. The investigation at Site 122 dealt with a plant burning bituminous coal in a cyclone boiler and controlling emissions only of a particulate nature, by use of an electrostatic precipitator (ESP). The feature of this plant that is encountered on an infrequent basis is the cyclone boiler. In comparison with more common wall and tangential firing, cyclone firing uses a coarse grade of coal, and it produces a much hotter combustion zone. A significant consequence of the high combustion temperatures is the emission of an unusually high concentration of nitrogen oxides (at Site 122, 900 ppmv of NO_x in the stack). Offsetting the higher concentration of emitted NO_x is the relatively low concentration of emitted particulate matter. The rule of thumb for a cyclone-fired boiler is that ash from the coal is discharged with a ratio of bottom ash to fly ash of 80:20, which is an inversion of the usual ratio of bottom ash to fly ash of 20:80 with wall or tangential firing. There are certain very likely consequences of the unusual feature of cyclone firing on the substances of interest in the FCEM Project, such as relatively low emissions of the trace metals that are not volatile and are thus found mainly in the particulate state, or relatively low emissions of organic compounds that ordinarily survive the combustion process.

The substances of interest at Site 122 are listed in Table 1-1. This is a list of substances developed specifically for study at the site; the list is shorter in some respects and longer in other respects from the lists of target materials in other FCEM investigations. The inorganic substances given in the table all originate in the coal primarily, in a variety of chemical compounds. The inorganic substances classified as metals can be identified by conventional chemical analysis only as the elements themselves, not as compounds. All

Table 1.1 FCEM Substances Investigated at Site 122	
Inorganic substances – metals[a]	
Arsenic	Lead
Barium	Manganese
Beryllium	Mercury[c]
Cadmium	Nickel
Chromium	Selenium
Cobalt	Vanadium
Inorganic substances – nonmetals[a]	
Fluorine	Sulfur
Chlorine	Phosphorus
Organic compounds[b]	
Aldehydes	
Volatiles Benzene, toluene, and other aromatic hydrocarbons	
Dioxins and furans	

[a]Sampled at the ESP inlet duct and the ESP outlet duct.
[b]Sampled at the ESP outlet duct only.
[c]Also sampled at the stack.

are regarded as trace substances. The inorganic substances identified as nonmetals also originate in the coal. These nonmetals produce anionic species in solids and water or acid gases in the combustion gas. The organic compounds, in contrast to the inorganics, are most likely to occur not as components of the coal as fired but as products of chemical reactions associated with combustion or other postcombustion processes.

Most of the FCEM target substances listed in Table 1-1 are to be found among the 189 hazardous air pollutants (HAPs) listed in Title III of the Clean Air Act Amendments of 1990. That legislation requires the U.S. Environmental Protection Agency (EPA) to compile data on the emissions of these HAPs (also known as "air toxics") and determine whether regulations are required.

The results of this investigation do not necessarily reflect typical operation of the plant. Operating data that were obtained and samples that were analyzed to show compositions of process streams and emissions were collected during the first week of May 1993. The emissions were measured on only one of the two ESPs (the B unit) that operate in parallel. The specific coal burned at Site 122 at the time of this investigation was stockpiled specifically for this investigation in order to maintain a steady coal supply. As far as specific emission rates are concerned, the results of this investigation apply only to a specific coal and not necessarily to the full range of coals at the site.

The sampling and analytical methods employed in this investigation were typical of those used in other FCEM investigations. For example, trace metals were collected in EPA's Multiple Metals Train (described in pending Method 29) (1), and they were analyzed by Inductively Coupled Argon Plasma Emission Spectroscopy (ICP) and associated Atomic Absorption Spectroscopy (AAS) methods. These methods are described in Chapter 3.3 of Volume I-A, SW-846 (2).

The quality of the data differs from one category of samples to another. An overview of the data quality is given by the following remarks:

- ***Metals.*** For solids in bulk form (coal, bottom ash or slag, and fly ash removed from the ESP hoppers), the data are of dependable quality. This is due in large measure to the analyses of these samples in five different laboratories, which provided an increased level of assurance of data reliability. Unfortunately, for solids removed from the gas streams at the inlet and outlet of the ESP, there is more reason for doubting reliability. The samples from the gas ducts were analyzed in only one laboratory, whose data are not consistent with material balance and are not consistent with data from other laboratories. One of the earmarks of doubtful quality is the highly variable metal concentrations in a given duct from day to day, despite data from other sources suggesting that conditions did not change appreciably. Another sign of doubtful data quality is the serious departure of some of the trace metals from material balance.

- ***Acid gases.*** The concentrations of HF, HCl, and SO_2 calculated for the ESP outlet duct from the collected amounts of the corresponding anions represent 90 to 120% of

the amounts of the nonmetals fluorine, chlorine, and sulfur present in the coal. Very little H_3PO_4, on the other hand, was found in the gas stream; thus, phosphorus in the coal appears mainly in the ash remaining from combustion.

- ***Organic compounds.*** Concentrations of aldehydes at the ESP outlet were negligible; that is, they were evidently lower than 1.0 $\mu g/Nm^3$. Although this seems to be a dependable conclusion, the repeatability of the data was not satisfying. Concentrations of benzene and toluene were approximately 12 $\mu g/Nm^3$ and 3 $\mu g/Nm^3$, respectively. Sampling media prepared and analyzed in two different laboratories were in essential accord with respect to these volatile aromatic hydrocarbons. Dioxins and furans were essentially undetected. Several of these compounds are reported to be present at very low concentrations, <0.05 $\mu g/Nm^3$. Each, however, was detected at a level that is below the level where identification can be regarded as unequivocal.

Section 2 of this report describes the test site in general terms and identifies the sampling locations. Section 3 presents the results of the measurements and analyses in summary fashion. Section 4 gives supporting information in various categories, including the matters of data quality and material balance. The appendices are used to present data in more detail than can be found in Section 3; their contents are listed on page x.

Section 2

SITE DESCRIPTION

2.1 Facility Information

Site 122 is located on a waterway with access to a major river, which provides coal shipments by barge. The plant was constructed during the 1950s with a cyclone boiler. It is operated with a cold-side electrostatic precipitator as the only means of controlling emissions. It has a nominal power production capacity of 275 MW. The plant is fired with bituminous coal and emits combustion gas through an independent stack. Essential details about Site 122 are listed in Table 2.1.

The investigation described in this report was conducted during the first week of May 1993. For this period, arrangements had been made for a specific bituminous coal to be available for continuous use. The fuel is from the Illinois No. 5 Seam in Saline County, Illinois. The analyses of coal samples collected during this investigation are presented in detail in Section 3; highlights of the properties of the coal in the form received are listed below:

Moisture	8.4%
Ash	8.5%
Sulfur	2.0%
Calorific value	12,300 Btu/lb

Site 122 has seven cyclone burners, each rated to burn coal at the rate of 14 tons/hr. The rated gross output of the boiler is 273 MW at a steam flow of 2 million lb/hr. The rated net output is 253 MW. During the period of this investigation, involving daylight hours only, the average gross power production was 248 MW. Power production was reduced at night to about 150 MW.

The heat rate performance of Site 122 during 1993 was as follows:

Steam cycle heat rate	7919 Btu/kWhr
Gross heat rate	8702 Btu/kWhr
Net heat rate	9682 Btu/kWhr

Site 122 has dual ESPs that each treat one-half of the combustion gas from the boiler. During this investigation, the calculated rate of gas flow from the boiler, based on the coal composition and expressed for dry gas at 3% O_2, was approximately

Table 2.1 Features of Site 122	
Maximum gross electrical output (MW)	275
Particulate emission limits (lb/10^6 Btu)[a]	0.1375
SO_2 emission limits (lb/10^6 Btu)[a]	4.0
Air pollution controls	Cold-side ESP
Boiler type	Cyclone
Boiler additives	None
NO_x control	None
Fuel type	Bituminous coal
Fuel sulfur content (% dry)	2.0[b]
Fuel ash content (% dry)	8.5[b]
Fuel heating value (Btu/lb, dry)	13,300[b]
Fly ash disposal	Pond
Bottom ash disposal	Pond
Bottom ash sluice water source	River
Cooling water system	Once through
Cooling water source	River

[a]Limits imposed by the county.
[b]Mean values measured during sampling.

11,000 Nm^3/min; the actual rates measured at the inlet and the outlet of the B precipitator (the one measured in this investigation) were approximately half this value and thus in reasonable agreement with the expected 50:50 split between the two precipitators. The averages of the measured flow rates of gas at the actual O_2 concentrations (substantially higher than 3%) were as follows:

ESP inlet (B side)	14,000 m^3/min, 8.0% O_2
ESP outlet (B side)	15,000 m^3/min, 9.8% O_2

An elevation view of the section of Site 122 that was involved in flue gas sampling during this investigation are presented in Figure 2.1. This is a schematic drawing; it is not meant to show accurate detail. It will be noted that the ID fans at the outlet of the ESP are located upstream from the sampling ports in the outlet duct. Consequently, the gas was sampled at the inlet of the ESP at a negative pressure (about -10 in. H_2O) and at the outlet at a positive pressure (approximately 2 in. H_2O). The temperatures of the flue gas at the three sampling locations were typically as follows:

ESP inlet (B side)	285 °F
ESP outlet (B side)	312 °F
Stack	305 °F

The higher temperature at the ESP outlet is attributed to the compression of gas from the ID fans.

Electrode collecting area in the ESP of Site 122 has a total value of 253,440 ft^2. This provides a specific collecting area (SCA) of approximately 250 ft^2/1000 acfm. The ESP has operated for a good many years and its collecting efficiency is not high in comparison with later ESPs, which have been built to satisfy more stringent emission standards. The mass efficiency observed during the first week of May 1993 was about 93-94%; however, with the relatively low dust concentration evolved from the cyclone boiler (about 2.5 g/Nm^3 or 1.1 gr/scf), the ESP is able to satisfy an emission requirement of 0.12 lb/10^6 Btu.

The electrical sectionalization of the Site 122 dual ESPs is shown in Figure 2.2. Average values of secondary operating voltage (kV) and current density ($\mu A/ft^2$) during the week of testing are listed at the top of page 2-5. The current densities are unusually low for an ESP operating on ash from a medium-sulfur coal, which should cause no limitation in performance from high resistivity. The differences in current density from one side of Field 1 or 2 to the other side are puzzling; likewise, the erratic variation in current density from Field 1 to Field 4 is unusual.

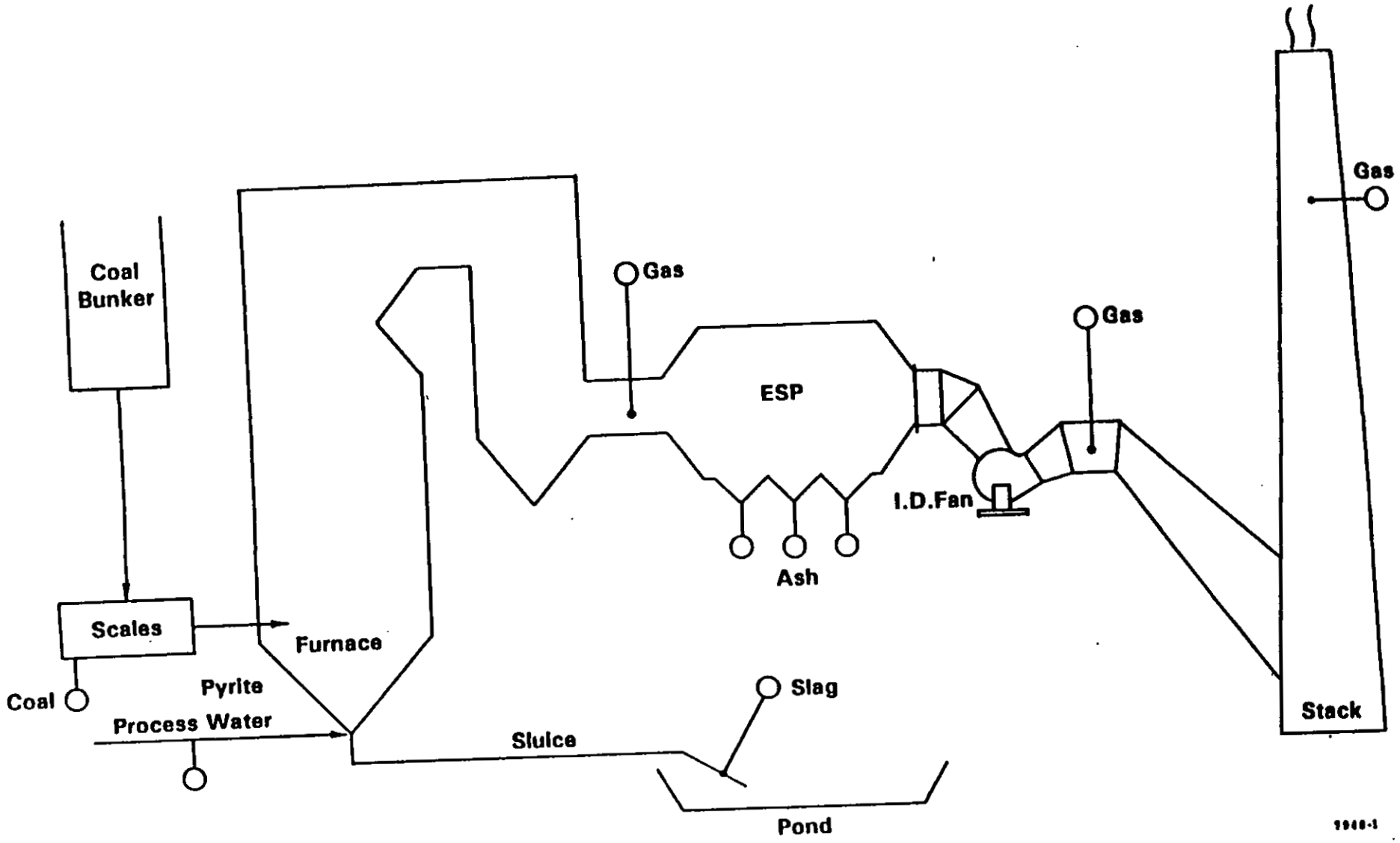

Figure 2.1 Sampling locations (samples indicated by small circles).

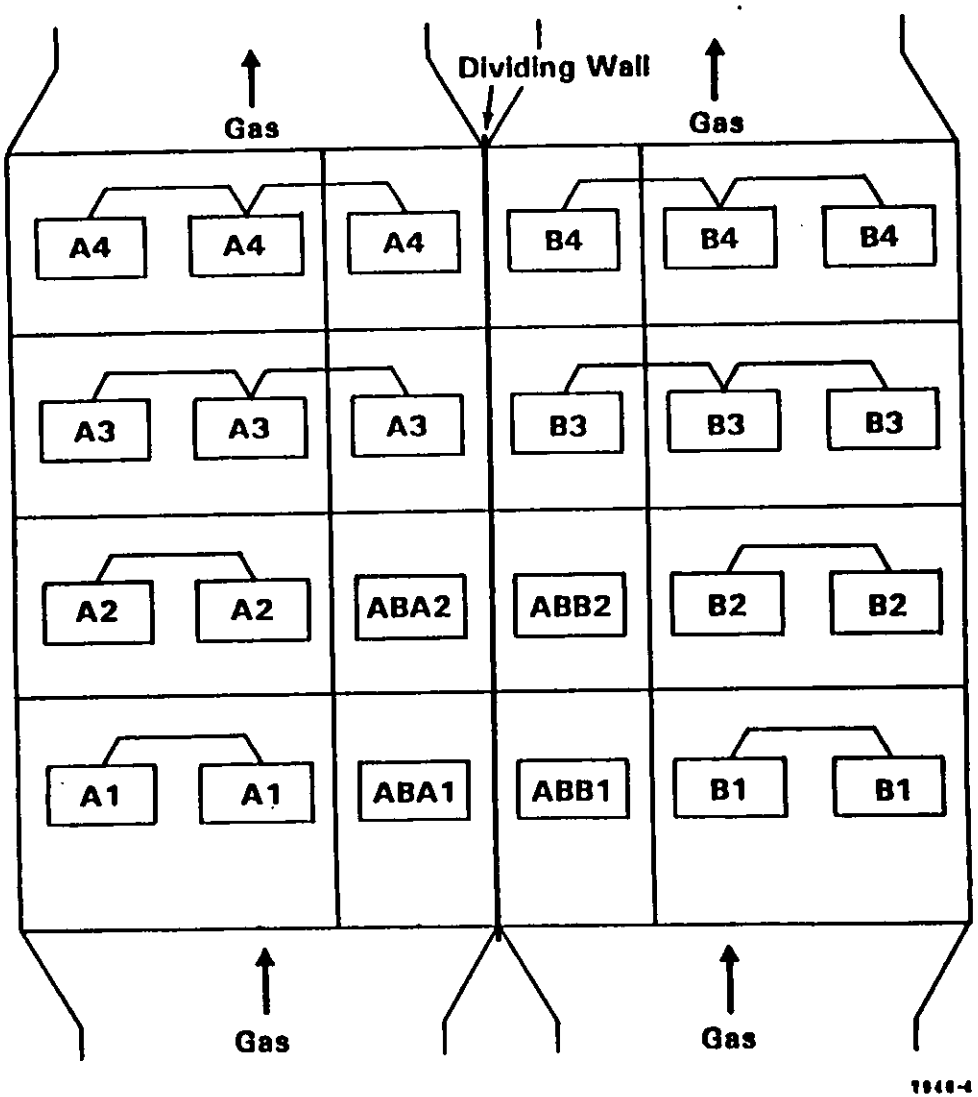

Figure 2.2 Electrical sectionalization of A and B electrostatic precipitators.

Secondary Voltages and Current Densities

		May 4		May 5		May 6	
Field	TR	kV	$\mu A/ft^2$	kV	$\mu A/ft^2$	kV	$\mu A/ft^2$
1	1ABB1	56.3	12	54.7	11	53.9	11
	B1	54.1	4	56.9	6	54.6	5
2	1ABB2	49.8	15	49.8	13	50.3	12
	B2	48.8	30	51.5	27	50.4	32
3	1B3	43.4	16	44.2	18	44.4	15
4	1B4	32.9	17	33.0	18	33.6	17

2.2 Sampling Locations

2.2.1 Process streams

The process streams of concern were the following:

- Coal as fired. Sampled at intervals during each test day with a scoop inserted into the streams feeding the seven coal scales for the individual cyclone burners.

- Slag or bottom ash. Sampled at intervals along with the transport water from the stream pouring into the ash pond.

- ESP ash. Sampled at intervals by opening hoppers in the inlet and outlet rows beneath the B side of the ESP.

- River water used for sluicing the slag or bottom ash was sampled from a tap on the inlet supply line. Water containing the slag was recovered at the pipe filling the ash pond, as stated above.

Daily composites were made from the individual samples at each sampling location; these composites were the samples chemically analyzed. In the case of the ESP ash, the ash from the inlet and outlet hopper rows was composited for each day in proportions approximating the relative masses collected in the inlet and outlet ESP sections. The overall ESP efficiency was about 93% or the penetration was approximately 7%. The relative mass of ash collected in each of the four electrical sections was assumed to be governed by the Deutsch relation for equal areas by section: $P = p^4$, where $P = 0.07$, the overall penetration as a fraction, and $p = 0.514$, the fractional penetration in each of the four sections of the ESP. Thus, the calculated fraction of the ash entering in each section that was collected in that section is as follows:

Section 1	1.000 x (1 - 0.514) = 0.486
Section 2	(1 - 0.486) x (1 - 0.514) = 0.250
Section 3	(1 - 0.486 - 0.250) x (1 - 0.514) = 0.128
Section 4	(1 - 0.486 - 0.250 - 0.128) x (1 - 0.514) = 0.066
Total =	0.486 + 0.250 + 0.128 + 0.066 = 0.930

The inlet row of hoppers receives ash collected in the first two sections while the outlet row receives ash collected in the last two sections. Thus, the mass ratio of the inlet deposit to that of the outlet deposit is approximately:

$$(0.486 + 0.250)/(0.128 + 0.066) = 3.79$$

Alternatively, the fractions of the total ash collected that is found in the inlet and outlet fields are 0.791 and 0.209. These are the proportions of ash from the two hopper locations that were blended to prepare a daily composite for analysis.

2.2.2 Flue gas streams

The sampling of gas streams by SRI personnel was designed to provide samples of the following:

ESP inlet	trace metals acidic gases ("anions")
ESP outlet	trace metals acidic gases aldehydes volatile organic compounds dioxins and furans
Stack	mercury, after dilution and cooling in a device for simulating processes in the plume (This device is described in Appendix H.)

The trace metals of concern were the following:

Arsenic	Lead
Barium	Manganese
Beryllium	Mercury
Cadmium	Nickel
Chromium	Selenium
Cobalt	Vanadium

All of the metals were collected simultaneously by use of EPA's Multiple Metals Train (Method 29, intended for eventual publication in 40 CFR). This method provides samples of both particulate matter and vapors (1).

As indicated above, mercury is one of the metals that is determined when EPA Method 29 is used for sampling, as at the ESP inlet and outlet ducts. Sampling for mercury in the diluted stack gas, however, was performed by the use of traps containing two types of solid sorbents, in the method developed by Nicolas Bloom (3). Further direct sampling for mercury at the stack and in the plume (from a sampling apparatus mounted in a helicopter) was performed by personnel of Brooks Rand, Ltd., of Seattle, who worked under a separate contract with the utility operating Site 122.

The acid gases of concern were HF, HCl, SO_2, and H_3PO_4. They were collected by use of a Modified Method 5 Train, in which the absorbing solution in the impingers is an aqueous mixture of sodium carbonate, sodium bicarbonate, and hydrogen peroxide.

The flue gas at the outlet of the ESP was sampled for aldehydes (and selected ketones) by a method similar to that in Method 0011, which has been proposed for incorporation in SW-846 (1). Sampling was performed by use of a Modified Method 5 Train in which two impingers in series contained an aqueous solution of 2,4-dinitrophenylhydrazine and hydrochloric acid. DNPH reacts with aldehydes to produce stable hydrazones, which are responsible for the retention of the volatile compounds in aqueous solution.

Volatile organics were collected at the ESP outlet with EPA's Volatile Organics Sampling Train (VOST). This apparatus is described under Method 0030 in SW-846 (2). The notable compounds in the group of volatile compounds collected in this train are aromatic hydrocarbons, such as benzene and toluene. The analytes are captured on solid sorbents (the polymeric sorbent Tenax and charcoal) and in water condensed from the vapor in the flue gas.

Dioxins and furans were collected at the ESP outlet by use of the Modified Method 5 Train, which incorporates a sampling cartridge of the resin XAD in addition to the filter and water-filled impingers. The Modified Method 5 Train is described in SW-846 as Method 0010 (2).

Section 3

RESULTS

3.1 Sampling Schedule

The schedule of sampling was intended to provide a complete set of samples of the types described above each day for three successive days. This plan was satisfied, on the dates May 4, 5, and 6, except with respect to diluted mercury at the stack. No sample of mercury was obtained on May 4; moreover, the available time on May 5 and 6 permitted completion of only two sampling experiments with the stack gas, one on each day. One blank experiment with the dilution device was completed, however, on May 6.

The daily time allocated to sampling was restricted to some degree by the plant's requirement for sootblowing. The initial arrangement was that sootblowing would be completed daily by 0900 hours and possibly resumed as early as 1600 hours, with as little as seven hours available for sampling. Resumption of sampling in the evening, after the late afternoon sootblowing, could not be scheduled because a change in unit load was certain to occur late in the day. As matters worked out, the period available for sampling was usually longer than seven hours.

Sampling while sootblowing was in progress was avoided. This was not because the effect of sootblowing on emissions was not of interest but because sootblowing could not be continued long enough at any given time to permit a uniform effect on the various types of samples being collected. The choice was to permit an irregular overlap between sootblowing and sampling or, alternatively, to avoid sootblowing during sampling altogether. The latter choice was considered necessary and was adopted.

3.2 Data Treatment

The analytical data in this report were obtained in different laboratories, as follows:

- Proximate and ultimate analysis of coal — Commercial Testing and Engineering Company
- Metals in coal — various laboratories as listed in Section 3.3.3
- Metals in bottom ash and ESP ash — various laboratories as listed in Appendix F
- Trace metals in the gas streams at the ESP inlet and outlet — Triangle Laboratories
- Acid gases at the ESP inlet and outlet — Southern Research Institute
- Aldehydes — Southern Research Institute

- Volatile organic compounds — both at Southern Research and at Lancaster Laboratories

- Dioxins and furans — Southern Research

Concentrations throughout this report for species in a gas stream are given in the units $\mu g/Nm^3$. This convention is based on a reference temperature of 0 °C (273.15 K) and a pressure of 1 atm. It is always for dry gas. Another key factor about the reference state is that the assumed O_2 concentration is always 3% by volume. The volume of flue gas sampled at the actual O_2 concentration was corrected to the value at the reference state by multiplying the volume sampled by the factor (20.9 - % O_2) /17.9. Correction of all concentrations to a fixed O_2 concentration permitted direct comparisons with minimized error due to inleakage and dilution with air.

Concentrations of certain species in the gas phase are also expressed in the units percent by volume or parts per million by volume. Except for water vapor, these concentrations are on the dry basis for the same reference state as that described in the preceding paragraph.

Certain practices employed in the presentation of data in this report are as follows:

- Sample concentrations were corrected for blank values (field blanks). The net values are listed in this report. (One exception occurs in data on volatile organics, for which this correction was not made explicitly, but instead both sample and blank values are listed.)

- When justified by a relatively large population of data, results that appeared to be outliers (4) were rejected in computing averages and standard deviations.

- When there was need to combine data that included "non-detects," the non-detects were equated to one-half of the detection limit. Thus, for example, the sum of 10 and <1.0 is said to be 10.5, and the average of 10, 5, and <7.2 is 6.2.

- The convention used in computing material balances of metals was based on the following approximation:

$$E_c / y = xE_f + (1-x)E_s$$

where E_c, and E_f, and E_s are the weight concentrations of a given element in coal, fly ash, and slag, or bottom ash;

y is the weight fraction of ash in the coal;

x and (1 - x) are the weight proportions of fly ash and slag, respectively, which are assumed to represent 100% of the coal ash.

- The practice used in computing material balances of nonmetals (halides, sulfur, and phosphorus) was in actuality the computation of "recovery," which is an expression of the percentage of each nonmetal in the coal that is accounted for by the measured concentration of the corresponding acid gas (HF, HCl, SO_2, or H_3PO_4).

3.3 Coal

3.3.1 Ultimate and proximate analyses

The composites of daily samples of coal were submitted to Commercial Testing & Engineering Company (CT&E) for proximate and ultimate analyses. Data reported by CT&E are presented in Table 3.1. All of the concentrations in this table are for coal before drying. Included in the analysis are the concentrations of four nonmetallic elements that produce acid gases of interest: fluorine, chlorine, sulfur, and phosphorus.

The concentrations of the trace elements of concern are included in Table 3.1. The discussion of the data on metals is deferred to Section 3.3.3.

3.3.2 Yields of fly ash and combustion gases

Calculations of the products of combustion with an excess of air giving 3% by volume of O_2 in the flue gas produced the results listed in Table 3.2. Among the results of interest are the following:

Volume of flue gas per 100 grams of coal	0.81-0.82 Nm^3
Maximum concentration of fly ash, assuming total entrainment of the ash in the coal in the offgases	10.3-10.6 g/Nm^3

Concentration of minor combustion gases, assuming total evolution in the flue gas --

SO_2	ca. 1700 ppmv
HCl	ca. 180 ppmv
HF	ca. 6.6 ppmv
H_3PO_4	ca. 17 ppmv

(There is no experience known to the author for anticipating 100% evolution of phosphorus as the vapor H_3PO_4, although the volatility of the acid could sustain this degree of gas evolution.)

Data on net power generation rate and coal consumption were provided by computer records at the plant. Coal consumption was recorded as a percentage of a fixed rate,

Table 3.1
Analysis of Coal as Fired[a]

	May 4	May 5	May 6	Mean	95% CI
Moisture, %	8.46	8.51	8.22	8.40	0.38
Ash, %	8.39	8.60	8.63	8.54	0.32
Volatile, %	32.83	32.68	32.49	32.67	0.42
Fixed carbon, %	50.32	50.21	50.66	50.40	0.58
Btu/lb	12356	12358	12266	12327	130
Carbon, %	68.59	68.89	68.69	68.72	0.38
Hydrogen, %	4.33	4.56	4.50	4.46	0.30
Nitrogen, %	1.59	1.66	1.59	1.61	0.10
Sulfur, %	2.00	1.99	1.99	1.99	0.01
Oxygen, %	6.64	5.79	6.38	6.26	1.12
Chlorine, %	0.23	0.23	0.25	0.24	0.03
Fluorine, %	0.0046	0.0046	0.0046	0.0046	0.0000
Phosphorus, %	0.021	0.018	0.020	0.020	0.003
Arsenic, μg/g	11.2	11.6	11.7	11.5	0.7
Barium, μg/g	30.1	33.3	34.6	32.7	5.8
Beryllium, μg/g	1.7	0.63	1.0	1.1	1.4
Cadmium, μg/g	0.98	0.53	1.08	0.86	0.73
Chromium, μg/g	9.63	11.1	13.3	11.3	4.6
Cobalt, μg/g	3.51	3.81	4.60	3.97	0.56
Lead, μg/g	20.2	25.2	30.9	25.4	13.3
Manganese, μg/g	41.3	29.6	37.6	36.2	14.9
Mercury, μg/g	0.070	0.070	0.098	0.079	0.040
Nickel, μg/g	9.40	14.1	15.9	13.1	8.3
Selenium, μg/g	1.19	1.51	2.00	1.57	1.01
Vanadium, μg/g	25.6	18.4	26.7	23.6	11.2

[a]Data for trace metals are means and confidence intervals based on data from several laboratories. See Appendix F, Table F.2.

Table 3.2
Calculated Combustion Products of Coal
(Based on 100 g of coal as fired)

	May 4	May 5	May 6
Moles of products			
CO_2	5.7106	5.7356	5.7189
H_2O	2.1478	2.2619	2.2321
N_2	0.0568	0.0593	0.0568
SO_2	0.0624	0.0621	0.0621
HCl	0.00648	0.00648	0.00704
HF	0.000241	0.000241	0.000241
H_3PO_4	0.000678	0.000583	0.000641
Moles of dry gas, total, at 3% O_2	36.1542	36.6648	36.4215
Volume of dry gas, Nm^3 total, at 3% O_2	0.8103	0.8217	0.8162
Calculated composition of flue gas at 3% O_2			
Fly ash,* g/Nm^3	10.354	10.466	10.574
CO_2, % by volume	15.80	15.65	15.70
SO_2, ppmv	1726	1694	1705
HCl, ppmv	179	177	193
HF, ppmv	6.7	6.6	6.6
H_3PO_4, ppmv	18.7	15.9	17.6

*This fly ash concentration is entirely hypothetical. It is derived from the assumption that all of the coal ash is entrained in the combustion gas.

280,000 lb/hr (apparently a hypothetical value, since it exceeds the maximum rate at which the plant can operate). The computer provided hourly readings of each parameter; the nine or eleven consecutive readings that embraced the period daily sampling operations were averaged to obtain representative data for each day. These averages are presented in Table 3.3. The following derived quantities are also listed: 1) absolute coal feed rate in lb/hr or kg/min, 2) rate of heat input from the coal in Btu/hr (based on the calorific values for the coal in Table 3.1), 3) heat rate in Btu/kWhr, and 4) flue-gas evolution rate (based on the ratio of flue gas volume at 3% O_2 to coal mass, as given in Table 3.2).

3.3.3 Concentrations of trace metals

Composites of the daily coal samples were ultimately analyzed in five different laboratories: Southern Research Institute, Galbraith Laboratories, Triangle Laboratories, Brooks Rand, and the Research Reactor Center of the University of Missouri-Columbia. The first four of these laboratories used ICP and AAS methods as described in Chapter 3.3 of Volume I-A, SW-846 (2). The last-named laboratory used instrumental neutron activation.

Each of the individual daily metal concentrations in Table 3.1 is the average from the results obtained in different laboratories, as listed in Appendix F, Table F.2. Certain outliers were eliminated in the calculation of averages; these outliers are identified in the appendix. The mean concentrations and 95% confidence limits in Table 3.1 are based on the three daily concentrations listed in this table.

3.4 Combustion Gases and Fly Ash

The concentrations of CO_2 and O_2 were measured with an Orsat apparatus. The concentration of water vapor was calculated from the volume of condensate collected in impingers and the weight of water adsorbed on the silica gel in the Multiple Metals Train. Concentrations of suspended particulate matter were calculated by determining the total weight of solids deposited on the filter in the Multiple Metals Train and deposited in the probe and filter housing ahead of the filter itself. The solids not directly associated with the filter were recovered from rinses with acetone and nitric acid; recovery was by filtration of the rinses with quartz-fiber filters.

Table 3.4 presents the results of determinations of CO_2, O_2, and water vapor. Concentrations of O_2, SO_2, and NO_x were recorded from data supplied by Continuous Emission Monitors (CEMs) installed by the plant at the stack. Typical CEM data for the stack were as follows:

O_2	9 % by volume
SO_2	1000 ppmv
NO_x	900 ppmv

Table 3.3
Unit Load, Coal Consumption Rate, and Related Quantities

	May 4	May 5	May 6	Mean	95% CI
Unit load, gross, MW rate	248	249	248	248	2
Fuel rate, %, of 280,000 lb/hr	64.86	64.26	63.81	64.31	1.31
Fuel rate, lb/hr	181,600	179,900	178,800	180,000	3,500
Fuel rate, kg/min	1,373	1,360	1,351	1,361	27
Fuel heating rate, Btu/hr	2.244×10^9	2.224×10^9	2.191×10^9	2.220×10^9	0.066×10^9
Heat rate, gross, Btu/kWhr	9,050	8,930	8,840	8,940	260
Flue gas evolution rate, Nm^3/min (both ESPs)					
Calculated	11,125	11,180	11,030	11,110	190
Observed, inlet*	12,670	12,640	11,710	12,340	1,360
Observed, outlet	10,740	11,240	11,550	11,180	1,020

*The "observed" inlet flow rate – actually, the product of measured gas velocity and duct cross-sectional area – is less accurate than the corresponding outlet value, because uncertainties in the inlet duct geometry. Information provided by the utility months after the testing was completed shows that within the inlet ducts to the ESP there are blockages against gas flow that make the actual cross-sectional area less than that indicated by outside dimensions.

Table 3.4
Concentrations of Major Flue Gases

	May 4	May 5	May 6	Mean	95% CI
ESP inlet[a]					
CO_2, %	11.5	11.4	10.4	11.1	1.5
O_2, %	7.5	7.8	8.6	8.0	1.4
H_2O, %	8.2	7.0	7.3	7.5	1.5
ESP outlet[a]					
CO_2, %	9.0	8.3	7.8	8.4	1.5
O_2, %	10.0	9.9	9.4	9.8	0.8
H_2O, %	6.7	7.4	7.1	7.1	0.9

[a]The concentrations of CO_2 and O_2 are for dry flue gas.

Table 3.5
Data Regarding Suspended Particulate Matter

	May 4	May 5	May 6	Mean	95% CI
ESP inlet concn, g/Nm^3	2.494	3.021	2.874	2.796	0.676
ESP outlet concn, g/Nm^3	0.1798	0.1851	0.1771	0.1807	0.0101
Apparent ESP efficiency,[a] %	92.8	93.9	93.8	93.5	1.5
Emission rate,[a] lb/10^6 Btu	0.118	0.123	0.118	0.120	0.007
Apparent ash entrainment,[b] %	24.1	28.9	27.2	26.7	6.0

[a]The data include an indeterminate contribution from condensed particulate matter, probably condensed sulfuric acid in the main. A coal with 2% sulfur, like the one at Site 122, could easily produce 10 ppmv of sulfuric acid vapor, which could condense in the metals train as 0.065 g/Nm^3 of particulate (one third of that reported).
[b]The percentage of the maximum possible ash concentration (Table 3.2).

These values for O_2 and SO_2 are consistent with the data obtained by SRI and presented later in this report. The determination of NO_x was not included in any SRI measurements, and thus the CEM value was not confirmed. This high value for NO_x, of course, is a reflection of the very high combustion temperatures in a cyclone boiler.

Table 3.5 gives the concentrations of suspended solids based on data from the Multiple Metals Train. This table also includes values of certain quantities calculated from the concentrations of particulate matter. One of these quantities is the mass efficiency of the ESP; the values are approximately 93-94%. The value of the emission rate is about 0.12 lb/MMBtu or 52 μg/kJ. Finally, there is a comparison between the observed concentration at the ESP inlet and the calculated concentration based on entrainment in the total amount of ash in the coal (from Table 3.2). This comparison indicates that the ratios of fly ash to bottom ash on successive sampling days were 24/76, 29/71, and 27/73, whereas the ratio usually cited for a cyclone boiler is 20/80. As will be shown, assignment of values to the ratio of fly ash to bottom ash was an important step in computing mass balances for elements in the coal and in the discharge streams from the boiler.

The mass efficiency of 93-94% is low for an ESP having an SCA of 250 ft^2/1000 acfm and presumably collecting an ash with no resistivity limitation. The low efficiency, coupled with the anomalous current densities pointed out on page 2-3, suggests the existence of some type of mechanical problem within the ESP.

Table 3.6 compares the observed gas flow rates and fly ash concentrations with those predicted from the composition and rate of combustion of the coal. The upper part of the table lists the actual flow rates and fly ash concentrations at the indicated O_2 concentrations and gas temperatures. The lower part of the table gives the predicted emissions from the coal and the observed gas flow rates and fly ash concentrations at standard conditions (3% O_2, 0 °C, and 1 atm). The flow rates were in the range 101 to 114% of the predicted values. They were in better agreement at the ESP outlet than at the ESP inlet. This was probably due to the fact that the geometry of the duct was much easier to define at the outlet; thus, the flow rate (the product of the cross-section and the average gas velocity) was calculated with greater accuracy at the outlet. The inlet concentrations of fly ash were the basis of evaluating the partition ratio between fly ash and bottom ash, as discussed above; the outlet concentrations led to the calculations of ESP efficiency, also discussed above.

3.5 Air Toxics at the ESP Inlet

3.5.1 Trace metals

Data on the measured concentrations of the trace metals at the ESP inlet are given in Table 3.7. The concentrations in the front and back halves of the train are interpreted as concentrations in the particulate and vapor states, respectively.

Table 3.6
Flow Rates of Flue Gas and Fly Ash
(Comparison of measured and calculated values for both ESPs)

	May 4	May 5	May 6
MEASUREMENTS[a]			
1) ESP inlet			
gas flow rate, m^3/min (actual)	28,760	28,580	28,360
ash concentration, g/m^3 (actual)	1.099	1.336	1.187
O_2 concentration, %	7.5	7.8	8.6
gas temperature, °F	290	285	282
2) ESP outlet			
gas flow rate, m^3/min (actual)	29,520	30,740	30,020
ash concentration, g/m^3 (actual)	0.0654	0.0677	0.0681
O_2 concentration, %	10.0	9.9	9.4
gas temperature, °F	311	313	311
CALCULATIONS			
1) Products of combustion			
gas flow rate, Nm^3/min (3% O_2)	11,125	11,180	11,030
ash concentration,[b] g/Nm^3 (3% O_2)	10.354	10.466	10.574
2) ESP inlet (corrected to reference)			
gas flow rate, Nm^3/min (3% O_2)	12,670	12,640	11,710
ash concentration, g/Nm^3 (3% O_2)	2.494	3.021	2.874
gas flow rate, % of calcd	113	113	106
3) ESP outlet (corrected to reference)			
gas flow rate, Nm^3/min (3% O_2)	10,740	11,240	11,550
ash concentration, g/Nm^3 (3% O_2)	0.1798	0.1851	0.1771
gas flow rate, % of calcd	96	101	105

[a]All measured values are from ESP B; flow rates were doubled as estimates for the two ESPs.
[b]The maximum possible ash concentration (Table 3.2).

Table 3.7
Concentrations of Metals at the ESP Inlet[a]
(Data in μg/Nm³)

Metal	May 4, 1993			May 5, 1993			May 6, 1993			Average, 95% CI		
	Particulate (train front half)	Vapor (train back half)	Total	Particulate (train front half)	Vapor (train back half)	Total	Particulate (train front half)	Vapor (train back half)	Total	Particulate (train front half)	Vapor (train back half)	Total
Arsenic	1594	<1	1595	2239	<1	2239	3829	0.09	3829	2550 ± 2860	<1	2550 ± 2860
Barium	3358	1.36	3359	2787	0.9	2788	5114	0.03	5114	3750 ± 3010	0.76 ± 1.66	3750 ± 3010
Beryllium	117	<1	117	96.6	<1	96.6	199	0.01	199	138 ± 134	<1	138 ± 134
Cadmium	137	0.98	138	119	0.56	120	261	0.03	261	172 ± 191	0.52 ± 1.19	172 ± 191
Chromium	2419	1.03	2420	2253	1.1	2254	3378	0.79	3379	2680 ± 1515	4.0 ± 13.4	2680 ± 1515
Cobalt	806	<1	806	691	<1	691	1316	0.04	1316	940 ± 820	<1	940 ± 820
Lead	5500	<1	5500	5156	2.4	5158	10578	0.08	10578	7080 ± 7590	<1	7080 ± 7590
Manganese	2389	2.39	2391	2194	See note[b]	2194	4209	See note[b]	4209	2930 ± 2760	2.4[c]	2930 ± 2760
Mercury	0.13	48.9	49.0	<1	41.6	42.1	<1	25.3	25.8	0.4 ± 0.5	38.6 ± 30.0	39.0 ± 30.0[d]
Nickel	2977	0.98	2978	2746	0.82	2747	4674	0.03	4674	3470 ± 2610	0.61 ± 1.27	3470 ± 2610
Selenium	62.5	40.6	103	3.82	133	137	6.05	178	184	24 ± 82	117 ± 174	141 ± 102
Vanadium	3443	0.98	3444	2861	0.74	2862	5053	0.03	5053	3780 ± 2810	0.58 ± 1.22	3780 ± 2810

[a]Data for dry gas containing 3% O_2 at 273.15 K and 1 atm. Corrected to actual O_2 concentration (about 8%) by multiplying each metal concentration by the factor 0.721.
[b]Not listed because actual result suggested contamination by permanganate.
[c]Only one experiment gave a credible result. Two of the back-half peroxide impingers appeared to be contaminated with solution from the permanganate impingers.
[d]This result cannot be accurate. It exceeds the level of mercury provided by the coal by a factor of four.

One of the most noteworthy items of information derived by comparing the front and back half concentrations is confirmation that both mercury and selenium were largely in the vapor state, as expected. Virtually 100% of the mercury and about 82% of the selenium penetrated the filter in the front half of the train and were absorbed in the peroxide and permanganate impingers behind the filter. There is nothing surprising in this result; the significance of the result is in the sense of confirming the expected behavior of these two relatively volatile elements.

Arsenic, in contrast to mercury and selenium, showed no evidence of volatility, despite oft-cited references to its volatility. Volatility of arsenic is possible through occurrence of the trivalent oxide, As_2O_3. Most of the information known to the author, however, suggests that arsenic occurs in the pentavalent state in a flue gas environment, being stabilized in the pentavalent state as a calcium arsenate (5).

Only mercury was determined in the permanganate impinger. The data in Table 3.7 do not show how the total amount of mercury in the back half of the sampling train was divided between the peroxide and the permanganate. The actual division ranged widely; the ratios of peroxide mercury to permanganate mercury in the back half were 19/81, 45/55, and 94/6 in separate experiments. The data from this study, then, do not permit any systematic speciation of mercury based on the concept that divalent mercury vapor will be absorbed in the peroxide and the elemental mercury in the permanganate.

The conclusions presented above on the partitioning of selected elements between the particulate and vapor states do not rest upon the absolute accuracy of the concentrations but upon the relative concentrations in the two halves of the sampling train. The conclusions are consistent with the relationships expected.

The data suffer from marked day-to-day variability, as easily seen by comparing the mean concentrations with the 95% confidence intervals. The means are typically smaller than the confidence intervals. It is possible that the variability is due to actual variations in the gas stream sampled or to flaws in the samping procedure. It is the author's opinion, however, that the variability is due mainly to difficulties in the analytical laboratory. The concentration data do not permit reasonable degrees of material balance to be demonstrated, as discussed subsequently in greater detail in Section 4.3. Another perspective on the data is obtained from Table 3.8, which compares the concentrations of the individual metals on the mass-fraction basis (in the units $\mu g/g$) in the suspended state at the ESP inlet and in the hoppers of the ESP (data from Table F.7, Appendix F). The concentrations are generally two to four times higher in the suspended ash. In fact, the only exceptions occur with mercury and selenium.

The positive bias in the data can be illustrated even for mercury in the vapor state. The concentrations of this element in the coal ranged from 0.070 to 0.098 $\mu g/g$ and had a mean value of 0.079 $\mu g/g$ (Table 3.1). The volume of flue gas per unit weight of coal averaged 0.008160 Nm^3/g for the reference state used throughout this report (Table 3.2).

Table 3.8
Concentrations of Metals in Solids in the Suspended State at the ESP Inlet and in the Hoppers of the ESP
(Data in μg/g)

Metal	Suspended particulate[a]	Hoppers[b]
Arsenic	904	320
Barium	1350	427
Beryllium	49	15
Cadmium	62	19
Chromium	971	265
Cobalt	337	77
Lead	2530	568
Manganese	1558	291
Mercury	<0.3	0.17
Nickel	1243	246
Selenium	8	19
Vanadium	1362	415

[a]Average of daily ratios of metal concentrations in particulate matter ($\mu g/Nm^3$) to total particulate concentration (g/Nm^3)(Tables 3.5 and 3.7).
[b]Average from Table F.7 in Appendix F.

Thus, with mercury evolved completely in the vapor state, the expected concentration was about 10 $\mu g/Nm^3$. The mean vapor concentration of 39 $\mu g/Nm^3$ in Table 3.7 is clearly in error.

3.5.2 Acid gases

The results of measurements of acid gases at the ESP inlet are given in Table 3.9. At the top of the table, the results are the concentrations expressed as the quantities of anions in unit volume of flue gas (units, mg/Nm^3). In the lower part of the table, the equivalent concentrations of the corresponding acid gases are given.

Obviously, the reproducibility of the results was quite poor. In general, the calculated recoveries of the elements in the coal are quite low. The ranges of acid concentrations found and the ranges of concentrations expected from analyses of the coal are as follows:

	Observed, ppmv	Expected, ppmv
HF	1.1-3.7	6.6-6.7
HCl	15-141	177-193
SO_2	850-1210	1690-1730

The concentration of H_3PO_4 equivalent to the phosphorus in the coal lies in the range 16-19 ppmv; actual concentrations of this acid at these levels were not literally expected, however, because of the anticipation that most of the phosphorus would appear as phosphate in the fly ash.

Solids on the filter from the sampling train for acid gases were analyzed for the anions in samples prepared by dissolving the solids in fused NaOH. The results were used to calculate equivalent concentrations of the acid gases (the complete data for the solids appear in Appendix F). These were the equivalent acid concentrations:

	Concn, ppmv	Percent of element in coal accounted for
HF	<3	<45
HCl	0.5-1.3	0.3-0.8
SO_2	35-48	2.0-2.8
H_3PO_4	3.0-3.8	17-21

Solids, then, accounted for negligible fractions of the elements not found as gases, except possibly for fluorine. No conclusive statement can be made for fluorine because of insufficient analytical sensitivity for this element in solids.

Even if allowance is made for the fact that only about 25% of the total ash was entrained in the flue gas (the same concentration in solids being assumed for the slag or bottom

Table 3.9
Acid Gases at the ESP Inlet[a]

	May 4	May 5	May 6	Mean	95% CI
Observed anion concn, mg/Nm^3					
Fluoride	0.960	3.2	2.3	2.1	2.8
Chloride	23.4	224	31.3	86	300
Sulfate	3650	5170	4720	4510	1940
Phosphate	<1.6	<1.7	<1.9	<1.9	--
Calculated acid concn, ppmv					
HF	1.13	3.73	2.11	2.3	3.3
HCl	15	141	20	58	178
SO_2	850	1210	1100	1050	460
H_3PO_4	<0.23	<0.24	<0.27	<0.27	--

[a]Data for dry gas at 273.15 K and 1 atm containing 3% O_2. Corrected to actual O_2 concentration (about 8%) by multiplying each listed concentration by the factor 0.721.

ash), the solids do not account for much of the chlorine or sulfur in the coal. The conclusion is different for phosphate, however, for which the solids account for roughly all of the phosphorus in the coal.

The data for HF, HCl, and SO_2 at the ESP inlet show quite unacceptable agreement with the values expected from the coal analysis. Evidently, there was some interference with satisfactory analysis at the ESP inlet.

3.6 Air Toxics at the ESP Outlet

3.6.1 Trace metals

Data on the trace metals at the ESP outlet are given in the same format in Table 3.10 as the preceding data at the inlet. The same general conclusions about metal volatilities from data for the halves of the sampling train apply. The data on mercury as summarized in this table are misleading, as the footnote indicates. A more reliable value is to be found in Section 3.7, based on data from a different sampling method. The approximate value in that section for the vapor, as determined at the stack, is 12 $\mu g/Nm^3$; not much more is to be expected in the particulate, because of the high volatility of mercury.

The summary data on selenium indicate, as do the data for this element at the ESP inlet, that the element is present as vapor to a large degree.

Table 3.11 compares metal concentrations on the basis of weight fraction in the particulate matter at the ESP inlet and ESP outlet. With just three exceptions (arsenic, mercury, and selenium), the concentration listed are higher at the outlet than the inlet. This contrast is the reverse of that normally found, which reflects generally higher concentrations as particle size decreases (or as particle specific surface area increases). The unrealistic contrast in Table 3.11 for most of the metals probably is further testimony to the inaccuracy of the inlet data (discussed previously in Section 3.5.1).

Despite the probable inaccuracy of the inlet data, the tabulation below has been prepared to show outlet metal concentrations as percentages of inlet concentrations:

Metal	Percentage	Metal	Percentage
Arsenic	13.2	Lead	3.8
Barium	2.8	Manganese	10.6
Beryllium	4.2	Mercury	25.5
Cadmium	3.1	Nickel	3.1
Chromium	5.6	Selenium	71.3
Cobalt	4.2	Vanadium	5.9

Table 3.10
Concentrations of Metals at the ESP Outlet[a]
(Data in μg/Nm³)

Metal	May 4, 1993			May 5, 1993			May 6, 1993			Average, 95% CI		
	Particulate (train front half)	Vapor (train back half)	Total	Particulate (train front half)	Vapor (train back half)	Total	Particulate (train front half)	Vapor (train back half)	Total	Particulate (train front half)	Vapor (train back half)	Total
Arsenic	87.8	<1	88	400	<1	400	520	1.9	522	336 ± 554	<1	337 ± 556
Barium	8.6	1.2	9.8	134	1.3	135	168	1.1	169	104 ± 209	1.2 ± 0.3	105 ± 209
Beryllium	4.7	<1	5.2	6.9	<1	7.4	5.8	0.01	5.8	5.8 ± 2.7	<1	6.1 ± 2.7
Cadmium	3.3	1.4	4.7	7.1	0.48	7.6	4.1	0.03	4.1	4.8 ± 5.0	0.6 ± 1.7	5.5 ± 4.7
Chromium	78.8	1.7	80.5	179	1.4	180	191	2.9	194	150 ± 154	2.0 ± 2.0	152 ± 154
Cobalt	36.8	<1	37.5	35.7	<1	36.2	44.9	0.07	45.0	39.1 ± 12.4	<1	39.6 ± 11.9
Lead	140	<1	140	377	<1	377	302	0.12	302	273 ± 500	<1	273 ± 300
Manganese	455	3.3	458	395	2.5	3.97	74.4	See note[b]	74.4	308 ± 509	2.9 ± 1.5[c]	310 ± 512
Mercury	2.7	23.9	26.6	2.3	1.7	4.0	<1	<1	<1	1.8 ± 3.0	8.7 ± 32.8	10.4 ± 35.2
Nickel	51.5	<1	52.0	129	<1	129	138	1.2	139	106 ± 119	0.7 ± 1.0	107 ± 119
Selenium	23.4	0.15	23.5	69.8	95.5	165	61.7	52.4	114	51.6 ± 61.6	49.4 ± 118.5	101 ± 179
Vanadium	99.6	0.93	100.5	239	<1	239	334	0.04	334	224 ± 293	0.5 ± 1.0	224 ± 291

[a]Data for dry gas containing 3% O_2 at 273.15 K and 1 atm. Corrected to actual O_2 concentration (about 10%) by multiplying each metal concentration by the factor 0.609. Data at 10% O_2 are listed in Table 3.16.
[b]Not listed because actual result suggested contamination by permanganate.
[c]Based on two experiments, not three.
[d]These data on mercury, although presented here in a straightforward manner, are obviously inconsistent when considered as the average compared against highly variable daily results in the three preceding tables and thus should not be used. A more meaningful value for the vapor and for the total is 12 μg/Nm³ (see Section 3.7).

Table 3.11
Concentrations of Metals in Solids in the Suspended State at the ESP Inlet and Outlet
(Data in μg/g)

Metal	ESP inlet[a]	ESP outlet[b]
Arsenic	904	1700
Barium	1350	560
Beryllium	49	23
Cadmium	62	21
Chromium	971	682
Cobalt	337	149
Lead	2530	1250
Manganese	1558	851
Mercury	<0.3	5
Nickel	1243	492
Selenium	8	242
Vanadium	1362	1060

[a]Data from Table 3.8.
[b]Computed in the same way as the data at the inlet from Table 3.8.

With the exception of mercury, these percentages provide the only direct indication of metal penetration through the ESP. The range is from 3.1% penetration by nickel to 71.3% by selenium. The high penetration of selenium is attributable to the occurrence of this element in the vapor state. For the remaining 12 elements, the average penetration is 5.6%. In comparison, the average penetration of the total particulate matter (Table 3.5) is 6.5%. There is the likelihood that the trace-metal penetration is higher, not lower, than total particulate penetration, because there is the likelihood that trace-metal concentrations on the weight basis will be higher in the smaller particles that have the greater penetration of the ESP.

For mercury, the most appropriate conclusion is that the penetration of the ESP was total. The alternate data for mercury vapor at the state indicate that the concentration was 12 $\mu g/Nm^3$. This is 20% higher than the value calculated from the coal composition. The significant implication is that the observed mercury vapor concentration in the stack is, within experimental error, the same as the maximum concentration that the coal could produce.

3.6.2 Acid gases

The results of measurements of acid gases at the ESP outlet are given in Table 3.12. This table has the same format as the corresponding table for the ESP inlet. The reproducibility of the results at the outlet is far superior to the reproducibility at the inlet, and the calculated recoveries of three of the elements (all but phosphorus) in the coal are much improved. The ranges of HF, HCl, and SO_2 concentrations at the ESP outlet and the ranges of concentrations expected from analyses of the coal are as follows:

	Observed, ppmv	Expected, ppmv
HF	6.4-7.1	6.6-6.7
HCl	212-224	177-193
SO_2	1590-1680	1690-1730

Obviously, as stated previously, there must have been interference in the determination of acid gases at the ESP inlet, because there is no plausible mechanism by which the gases could have arisen at the outlet if they were in some other form at the inlet.

3.6.3 Organic compounds

Aldehydes. The samples collected on May 4 and 5 gave no signal for any aldehyde compound, except acetaldehyde. This compound was found at similar concentrations in the reagent blank and thus cannot be attributed to the flue gas as a source. The limit of detection of each aldehyde is about 0.5 μg; the volume of gas sampled in each instance was about 0.4 Nm^3. Thus, the concentrations of the undetected compounds were no higher than 1.2 $\mu g/Nm^3$.

Table 3.12
Acid Gases at the ESP Outlet[a]

	May 4	May 5	May 6	Mean	95% CI
Observed anion concn, mg/Nm^3					
Fluoride	5.99	5.92	5.44	5.78	0.74
Chloride	336	344	354	345	22
Sulfate	7210	6990	6810	7000	500
Phosphate	<1.6	<1.3	<1.7	<1.7	--
Calculated acid concn, ppmv					
HF	7.07	6.99	6.42	6.83	0.88
HCl	212	217	224	218	15
SO_2	1680	1630	1590	1630	110
H_3PO_4	<0.22	<0.19	<0.25	<0.25	--

[a]Data for dry gas at 273.15 K and 1 atm containing 3% O_2. Corrected to actual O_2 concentration (about 10%) by multiplying each listed concentration by the factor 0.609.

The sample collected on May 6 gave very different results. Each of the compounds below was detected at the approximate concentration listed:

Formaldehyde	5 $\mu g/Nm^3$
Acrolein	7 $\mu g/Nm^3$
2-Butanone	8 $\mu g/Nm^3$
Benzaldehyde	100 $\mu g/Nm^3$

(The third compound is a ketone rather than an aldehyde, but it is one of the compounds in the ketone class that is captured in the reagent used for aldehydes.) The results on the final test day are quite different from those on the first two days, but there is no objective basis for overlooking the results for the third day. Nevertheless, they are believed to reflect contamination from a source that cannot now be identified. Unfortunately, no sample of the reagent used on May 6 was retained for analysis. However, recent experience has shown that some commercial samples of DNPH are quite impure for use in this method and not adequately purified by the routine extraction method that is used with the prepared sampling solution. Thus, reagent contamination is presumed to have occurred.

Volatile organic compounds. Two separate sets of Tenax and Tenax/charcoal sampling tubes were prepared and analyzed. One set of tubes was prepared and analyzed at Southern Research Institute; the other set was processed before and after sampling by Lancaster Laboratories of Lancaster, PA. Analysis was by GC/MS (low resolution).

The analytical results are centered on aromatic hydrocarbons, as discussed in the next paragraph. There were other analytes detected, however, on a frequent basis. The other analytes in the results at SRI were acetone and carbon disulfide, which are believed to have been contaminants introduced inadvertently in the laboratory. At Lancaster, methylene chloride, another common laboratory solvent, was an evident contaminant in the Tenax tubes. Also at Lancaster, the occurrence of other compounds was more frequent in the Tenax/charcoal tubes; methylene chloride and chloroform occurred routinely, and other halogen-containing compounds occurred less frequently. None of these compounds can be ruled out as components of the flue gas sampled, but they are regarded as far more likely to have occurred as the result of laboratory contamination.

Table 3.13 summarizes the results on benzene and toluene, which were the volatile compounds of primary interest. Both compounds were always present in the samples in amounts well above the detection limit (about 5 ng). The average of daily concentrations is about 20 $\mu g/Nm^3$ for benzene and 6 $\mu g/Nm^3$ for toluene. The actual concentrations may be somewhat lower because the data in the table were not corrected for blanks. The reason is that blank amounts varied widely and in some instances exceeded the corresponding sample amounts.

Further information on the results for benzene and toluene in individual samples and blanks is given in Table G.2 in Appendix G. The results of an alternate mathematical treatment in which the amount of analyte found is assumed to be a linear function of the

Table 3.13
Concentrations of Benzene and Toluene at the ESP Outlet[a]

Analyte	Concentration; μg/Nm³			Mean	95% CI
	May 4	May 5	May 6		
Benzene	12.9 24.8 37.5	16.6 20.0 22.8 27.9 16.1	14.2 10.9 21.3		
	25.1	20.7	15.5	20.4	11.9
Toluene	3.4 5.6 13.2	6.1 11.6 5.7 5.8 2.9	4.9 4.6 6.5		
	7.4	6.4	5.3	6.4	2.6

[a]Data include means and 95% confidence intervals for daily samples. Background concentrations were not used for correction.

sample volume. The linear regression analysis produces values of the blank that are probably too high to be realistic, and it produces substantially lower indicated concentrations of benzene (12.6 $\mu g/Nm^3$) and toluene (1.1 $\mu g/Nm^3$).

Details on other analytes that were sometimes detected are given in Table G.3 in Appendix G.

Studies performed by SRI nearly a year after the Site 122 investigation was completed showed that the probes then used for sampling volatile organics can produce false indications that these compounds are present in the gas stream. Specifically, the heating tape in the annulus between the liner and the shell can evolve compounds such as benzene and toluene. The compounds from this source are particularly likely to contaminate the gas sample if the duct being sampled is under negative pressure. The ESP outlet duct at the site was at elevated pressure, and thus contaminants from the probe are considered relatively unlikely at Site 122. Nevertheless, they may have been present.

Dioxins and furans. The 2,3,7,8-chlorine-substituted congeners that are responsible for acute toxicity are listed in Table 3.14. The apparent concentrations of the congeners at the outlet of the ESP are also listed. Most of the compounds were not detected; the highest concentration of any congener was approximately 0.03 $\mu g/Nm^3$.

The total concentrations of dioxins and furans classified only as to the total number of chlorine substituents, not as to location of the substituents, are listed in Table 3.15.

3.7 Mercury at the Stack

Previous tables (in Sections 3.5.1 and 3.6.1) presented data on the concentrations of mercury at the ESP inlet and outlet based on samples collected with the Multiple Metals Train. This section deals with samples at the stack that were collected with solid sorbents of the type developed by Nicolas Bloom (3), who was on the staff of Brooks Rand, Ltd., of Seattle, WA, at the time these sorbents were first described. Brooks Rand was responsible for sampling at the stack and simultaneously in the plume, from a helicopter, while SRI undertook to collect stack samples by use of a simulation device for the cooling and diluting of stack gas that occurs in the plume. This dilution apparatus is described in Appendix H. All of the samples of mercury from the stack, with or without dilution, and those also from the plume were analyzed by Brooks Rand, using the method of atomic fluorescence spectroscopy. (Brooks Rand's participation in this study took place through a separate contractual arrangement with the utility operating Site 122.)

Samples of mercury in the dilution apparatus that were subjected to analysis came from two locations: 1) a filter located beyond the chamber where the stack gas had been diluted by a factor of 10:1 and cooled to approximately 90 °F (with a stream of filtered and chilled ambient air) and 2) a set of sorption tubes located beyond the filter. All of the stack gas and all of the dilution air, with a combined volume of about 18 m^3, passed

Table 3.14
ESP Outlet Concentrations of Dioxins and Furans with 2,3,7,8 Substitution

	Concentration, μg/Nm³		
	May 4	May 5	May 6
Tetra substitutions			
2,3,7,8 TCDF	<0.001	<0.001	<0.001
2,3,7,8 TCDD	<0.001	<0.001	<0.001
Penta substitutions			
1,2,3,7,8 PeCDF	<0.002	<0.002	<0.002
2,3,4,7,8 PeCDF	<0.002	<0.002	0.002
1,2,3,7,8 PeCDD	<0.002	<0.002	<0.002
Hexa substitutions			
1,2,3,4,7,8 HxCDF	<0.002	<0.002	<0.002
1,2,3,6,7,8 HxCDF	<0.002	<0.002	0.002
1,2,3,7,8,9 HxCDF	<0.002	<0.002	0.002
2,3,4,6,7,8 HxCDF	0.026	0.011	0.021
1,2,3,4,7,8 HxCDD	<0.002	<0.002	<0.002
1,2,3,6,7,8 HxCDD	<0.002	<0.002	<0.002
1,2,3,7,8,9 HxCDD	<0.002	<0.002	<0.002
Hepta substitutions			
1,2,3,4,6,7,8 HpCDF	<0.002	<0.002	<0.002
1,2,3,4,7,8,9 HpCDF	<0.002	<0.002	<0.002
1,2,3,4,6,7,8 HpCDD	<0.002	<0.002	0.005
OCDF	<0.004	<0.004	<0.004
OCDD	<0.004	<0.004	<0.004

Table 3.15
ESP Outlet Concentrations of Dioxins and Furans by Group

	Concentration, μg/Nm³		
	May 4	May 5	May 6
TCDF	0.005	<0.005	0.012
TCDD	0.024	0.021	<0.005
PeCDF	0.007	0.017	0.007
PeCDD	<0.005	<0.005	<0.005
HxCDF	0.011	0.018	0.024
HxCDD	<0.005	<0.005	0.012
HpCDF	<0.005	<0.005	0.055
HpCDD	<0.005	<0.005	0.005
OCDF	<0.010	<0.010	<0.010
OCDD	<0.010	<0.010	<0.010

through the filter. Only about 0.09 m^3 of the filtered mixture, on the other hand, passed through the sorption tubes. Each set of sorption tubes consisted of a tandem pair with soda lime for collecting oxidized mercury and a second tandem pair, located behind the first pair, for collecting elemental mercury. A sample of mercury from ambient air alone was also collected for use in a blank correction.

Although the stack gas had been cooled from 280 to 90 °F before reaching the filter in the diluter, less than 1% of the mercury from the stack was retained on the filter. This was the expected result because the maximum expected concentration of mercury in the stack would not reach its dew point until cooled much below 90 °F (the approximate dew point is even below -40 °F). (Based on the mercury content of the coal, the expected mercury concentration in the stack was about 10 $\mu g/Nm^3$.)

Two sampling runs with the stack gas were completed successfully, one on May 5 and one on May 6. (The difficulty in providing electrical power on the stack sampling level prevented completion of the first run on May 4.) The total concentrations of mercury, calculated for the stack gas before dilution using the results from analyses of both types of sampling traps, was approximately 6.4 $\mu g/Nm^3$. This value is substantially below the value predicted from the coal analysis. The concentration was evidently not reduced to the low level observed, however, by loss of mercury on the filter of the dilution device, in view of the fact that less than 1% of the mercury recovered was on the filter. The mercury that was not accounted for may have been deposited on the walls of the dilution chamber. Rinsings of the walls were not analyzed unfortunately. In retrospect, these rinsings may have contained some of the mercury not accounted for.

The analysis of the soda lime and carbon traps gave the distribution of mercury as oxidized, divalent mercury, or Hg(II), and elemental mercury, or Hg(0). The mercury collected on the soda lime is reported as divalent mercury and that from the iodated carbon as the element. Approximately 30-35% of the total mercury apparently occurred in the divalent state, and the balance occurred as the element.

Richard Brooks has made available to SRI the results of direct sampling of mercury in the stack as well as the results of sampling from the plume in a helicopter. Table 3.16 summarizes the results obtained by the two organizations. The striking feature of these results is that the concentration of elemental mercury was essentially the same when corrected for dilution, regardless of sampling location or technique, whereas the concentration of divalent mercury appeared to be reduced in both the simulated plume and in the actual plume. Obviously loss of divalent mercury without a compensating increase in elemental mercury is inconsistent with the conservation of matter. The phenomenon that caused the apparent disappearance of divalent mercury is not currently known. The utility staff member responsible for Brooks Rand's work has speculated that the loss in the plume is associated with non-isokinetic sampling. Whether this has now been proven is not known by the present author.

An additional observation from the data in Table 3.16 is that the total concentration of mercury in the undiluted stack gas, 12 $\mu g/Nm^3$, is approximately 20% higher than the expected value based on the coal analysis.

3.8 Emissions

Previous tables have all expressed concentrations with 3% O_2 as the part of the definition of the reference state. Table 3.17 gives the estimated stack concentrations with 10% as the assumed O_2 concentration (this is the approximate average of O_2 in the stack).

Estimated stack emissions are presented in Table 3.18. They are given in the units 1) $\mu g/MJ$ and 2) $lb/10^{12}$ Btu. These emission values are based on the ESP outlet metal concentrations in Table 3.10 (except for the mercury value in the stack reported by Brooks Rand for the undiluted gas in Table 3.16), the outlet data for nonmetals in Table 3.12, and the summary data for outlet concentrations of organic compounds in the text and in Tables 3.13 and 3.14.

Each chemical substance emitted is given in the units $\mu g/Nm^3$. Table 3.2 indicates that the volume of gas from 1 g of coal is, on the average, 0.00816 Nm^3. Table 3.1 shows that the average calorific value is 12,327 Btu/lb or 28,653 J/g. Hence,

$$1\ \mu g/Nm^3 = 1\ \mu g/Nm^3 \times 0.00816\ Nm^3/g \times 1\ g/28{,}653\ J$$

$$= 2.85 \times 10^{-7}\ \mu g/J$$

$$= 0.285\ \mu g/MJ$$

$$= 0.622\ lb/10^{12}\ Btu$$

Table 3.16
Stack and Plume Concentrations of Mercury Vapor

	$\mu g/Nm^3$ (3% O_2)		
	Elemental	**Divalent**	**Total**
Stack, direct sampling (Brooks Rand)	4.6 (36%)	7.8 (64%)	12.4
Stack, simulated plume cooling/dilution (Southern Research)	4.4 (68%)	2.0 (32%)	6.4
Plume, helicopter (Brooks Rand)	ca. 4 (100%)	0 (0%)	ca. 4

NOTE: Elemental mercury as a percentage of total mercury increased (apparently) but remained fixed absolutely (at constant 3% O_2).

Table 3.17
Concentrations of Substances Estimated for the Stack at the Actual O_2 Concentration of Approximately 10%

Substance	Concentration, $\mu g/Nm^3$
TRACE METALS	
Arsenic	205
Barium	64
Beryllium	3.7
Cadmium	3.3
Chromium	93
Cobalt	24
Lead	166
Manganese	189
Mercury[a]	7.6[a]
Nickel	65
Selenium	62
Vanadium	136
NONMETALS	
Fluorine	3520
Chlorine	630,000
Sulfur	1,420,000
ORGANICS	
Formaldehyde	<0.7
Benzene	12.4
Toluene	3.9
Dioxin or furan[b]	<0.02

[a]Based on data of Brooks Rand.
[b]With 2,3,7,8 substitution of chlorine.

Table 3.18 Emissions in the Stack Flue Gas		
	μg/MJ	lb/10^{12} Btu
TRACE METALS		
Arsenic	96	220
Barium	30	69
Beryllium	1.7	4.0
Cadmium	1.6	3.6
Chromium	43	100
Cobalt	11	26
Lead	78	180
Manganese	88	205
Mercury[a]	3.5	8.2
Nickel	30	71
Selenium	29	67
Vanadium	64	148
NONMETALS		
Fluorine	1.6×10^3	3.8×10^3
Chlorine	9.8×10^4	2.3×10^5
Sulfur	6.6×10^5	1.5×10^6
ORGANICS		
Formaldehyde	<0.3	0.7
Benzene	3.4	7.8
Toluene	0.8	1.9
Dioxin or furan[b]	<0.01	<0.03

[a]Based on data of Brooks Rand.
[b]With 2,3,7,8 chlorine substitution.

Section 4

DATA EVALUATION

4.1 Process Operation

A prerequisite to successful evaluation of air toxics emissions on three successive days was the stability of the plant operation. Certain information regarding the stability of conditions from day to day was given in Section 3. Key among the parameters discussed in that part of the report was the stability of the coal composition, the coal firing rate, the unit load, and the composition of flue gas with regard to the major components. The data on each of these parameters indicated that the desired stability of operation was achieved.

The data cited previously on unit load and coal firing rate were obtained from the computerized data acquisition system of the plant. Additional data bearing on the stability of process operation (air flow rate, steam flow rate, steam temperature, and steam pressure) were also obtained from that system. The data from the computer acquisition system are presented in Tables 4.1, 4.2, and 4.3. These data are essentially for 1-hr intervals during 24-hr daily operation. The information related to the daylight hours during which sampling occurred are set apart; they are presented with the values of averages and standard deviations.

4.2 Sample Collection

The methods used to collect the samples from the gas streams are listed in detail in Appendix C. The information given in the appendix includes specifications on whether sampling was performed on the basis of traversing or sampling at a single point. Traversing was the method of choice for trace metals at both the inlet and outlet of the ESP and for dioxins and furans at the outlet. Otherwise, single-point sampling was utilized; it included acid gases at both the inlet and outlet of the ESP, aldehydes and volatile organics at the outlet, and mercury vapor at the stack.

The proximity of sampling rates for metals to those required for precisely isokinetic sampling is indicated by the following tabulation:

Location	Date	Percent of isokinetic rate
ESP inlet	May 4	103
	May 5	101
	May 6	97
ESP outlet	May 4	94
	May 5	96
	May 6	97

Table 4.1
Process Operational Data from Computerized Acquisition
(Date: May 4, 1993)

Time	Unit load, MW	Coal feed % of 280,000 lb/hr	Air flow, thousands of lb/hr	Steam flow, millions of lb/hr	Steam temp, °F	Steam pressure, lb/in.^{2}
07:32:55 AM	252.957	65.672	1980.281	1.870	1022.641	2383.063
08:32:55 AM	248.863	66.109	1999.688	1.829	1024.531	2398.063
09:06:08 AM	243.875	68.867	2130.813	1.791	1035.719	2398.063
10:06:08 AM	248.863	64.742	1938.219	1.826	1022.953	2404.813
11:06:08 AM	248.965	64.965	1977.781	1.826	1024.344	2397.313
12:06:08 PM	249.563	65.102	1993.563	1.828	1026.063	2404.063
01:06:08 PM	249.203	65.127	1989.594	1.826	1026.031	2402.688
02:06:08 PM	248.664	64.672	1981.375	1.817	1024.906	2401.813
03:06:08 PM	248.266	65.266	1978.656	1.816	1024.375	2397.313
04:06:08 PM	249.164	65.152	1983.375	1.816	1025.344	2404.063
05:06:08 PM	239.180	63.869	1948.094	1.754	1026.844	2289.500
avg	247.734	64.862	1973.832	1.814	1025.108	2387.696
std	3.298	1.320	52.345	0.023	3.508	35.238
06:06:08 PM	180.238	46.853	1459.813	1.282	988.344	2395.938
07:06:08 PM	179.742	47.863	1489.906	1.283	1010.594	2401.188
08:06:08 PM	179.887	46.999	1494.469	1.282	1023.797	2403.313
09:06:08 PM	214.523	53.866	1734.250	1.547	1020.625	2416.000
10:06:08 PM	208.234	54.897	1656.781	1.505	1024.531	2417.500
11:06:08 PM	195.906	53.003	1625.719	1.417	1024.313	2409.438

Table 4.2
Process Operational Data from Computerized Acquisition
(Date: May 5, 1993)

Time	Unit load, MW	Coal feed % of 280,000 lb/hr	Air flow, thousands of lb/hr	Steam flow, millions of lb/hr	Steam temp, °F	Steam pressure, lb/in.^{2}
12:00:00 AM	154.828	38.008	1214.563	1.107	986.719	2426.500
01:00:00 AM	151.336	38.776	1211.563	1.093	943.531	2412.250
02:00:00 AM	151.836	39.991	1267.156	1.102	972.250	2411.500
03:00:00 AM	152.594	39.656	1291.219	1.108	977.734	2404.188
04:00:00 AM	148.801	39.264	1251.188	1.078	977.891	2401.938
05:00:00 AM	150.039	39.590	1263.906	1.082	973.766	2395.063
06:00:00 AM	234.191	60.716	1810.625	1.727	1015.203	2397.313
07:00:00 AM	238.781	61.482	1886.125	1.753	1026.156	2402.563
08:00:00 AM	247.867	64.168	1978.375	1.821	1024.906	2398.063
09:00:00 AM	248.863	63.738	1990.313	1.826	1024.031	2400.313
09:06:08 AM	248.664	65.053	1998.531	1.825	1025.250	2396.563
10:06:08 AM	247.105	64.801	2021.500	1.814	1028.594	2395.188
11:06:08 AM	248.602	64.746	2009.219	1.831	1025.219	2397.438
12:06:08 PM	248.367	64.766	2033.656	1.822	1026.781	2399.563
01:06:08 PM	251.797	59.569	1896.594	1.836	1031.563	2443.125
02:06:08 PM	249.266	64.959	2041.375	1.823	1025.031	2398.063
03:06:08 PM	249.664	64.803	2033.656	1.820	1025.438	2400.313
04:06:08 PM	250.762	64.764	2037.781	1.827	1026.188	2418.250
05:06:08 PM	250.461	64.748	2053.750	1.822	1022.813	2423.500
06:06:08 PM	249.004	64.434	2019.781	1.817	1025.938	2422.875
avg	249.369	64.264	2014.584	1.824	1026.282	2409.488
std	1.284	1.572	42.190	0.006	2.239	15.536
07:06:08 PM	209.035	55.134	1664.750	1.507	1024.969	2417.500
08:06:08 PM	213.824	56.585	1705.938	1.540	1032.000	2419.000
09:06:08 PM	206.039	54.221	1662.688	1.487	1026.531	2429.500
10:06:08 PM	202.047	54.163	1661.875	1.463	1023.906	2418.250
11:06:08 PM	250.461	64.738	1971.750	1.832	1022.656	2420.500

Table 4.3
Process Operational Data from Computerized Acquisition
(Date: May 6, 1993)

Time	Unit load, MW	Coal feed % of 280,000 lb/hr	Air flow, thousands of lb/hr	Steam flow, millions of lb/hr	Steam temp, °F	Steam pressure, lb/in.^{2}
12:00:00 AM	249.063	63.222	2052.313	1.823	1024.281	2417.500
01:00:00 AM	225.750	58.201	1776.500	1.642	1024.781	2411.688
02:00:00 AM	249.863	64.527	1953.313	1.830	1023.328	2412.250
03:00:00 AM	219.262	56.917	1714.438	1.586	1024.344	2417.688
04:00:00 AM	247.367	64.871	1965.406	1.823	1023.578	2392.813
05:00:00 AM	223.211	59.933	1807.156	1.627	1027.781	2424.250
06:00:00 AM	255.152	64.992	2005.875	1.875	1025.969	2417.500
07:00:00 AM	210.680	53.957	1625.594	1.527	1030.000	2415.438
08:00:00 AM	207.938	55.538	1673.281	1.508	1017.984	2421.250
09:00:00 AM	249.164	64.002	1979.688	1.825	1023.781	2423.500
09:06:08 AM	245.070	64.096	2042.719	1.797	1023.781	2422.000
10:06:08 AM	249.164	63.630	1972.688	1.823	1023.375	2429.500
11:06:08 AM	243.375	60.813	1878.656	1.777	1023.328	2416.000
12:06:08 PM	249.164	63.789	1977.969	1.821	1024.250	2428.000
01:06:08 PM	248.965	64.076	1992.094	1.821	1023.828	2419.000
02:06:08 PM	249.762	64.438	1999.094	1.823	1025.063	2419.750
03:06:08 PM	249.762	64.283	2001.844	1.827	1023.766	2419.000
04:06:08 PM	249.266	64.346	2008.750	1.824	1025.688	2419.000
05:06:08 PM	249.863	64.203	1993.813	1.826	1024.031	2424.250
06:06:08 PM	249.563	64.391	2011.625	1.824	1024.344	2420.500
avg	248.395	63.807	1987.925	1.816	1024.145	2421.700
std	2.140	1.028	40.791	0.015	0.702	4.083
07:06:08 PM	169.902	43.938	1437.188	1.232	1015.344	2341.125
08:06:08 PM	168.105	44.432	1450.875	1.237	993.531	2337.438
09:06:08 PM	168.504	46.265	1489.875	1.291	990.984	2329.188
10:06:08 PM	170.102	44.704	1465.219	1.239	1005.813	2347.125
11:06:08 PM	198.902	52.969	1576.500	1.444	1024.281	2411.688

The test plan called for the sampling of acid gases to be done by use of a traversing protocol. However, the high SO_2 concentrations would have led to depletion of the reagents before a traverse could have been completed and necessitate replenishment of the reagents. Moreover, the time allowed each day for sampling without interruption by sootblowing made it very difficult to schedule the time required for the traversing mode. Therefore, a decision was made to use single point sampling for the acid gases work. This left the possibility open that stratification might result in a bias at the ESP inlet where the duct was at a significantly negative pressure. However, such was not the case at the ESP outlet. The latter was downstream of the fans so the gases would have been well mixed, and the duct pressure was positive, making dilution from leakage impossible for that sampling location.

Particulate emissions from the unit tested were controlled by two ESPs operating in parallel. The flue gas from the boiler divided into two streams, nominally having the same flow rates, upstream of the ESPs; the gas streams recombined in the stack. The costs and logistics involved with sampling both ESPs made it impractical to sample both of the ESP inlets and outlets, so one of the two was selected and all sampling but that done at the stack took place around the single ESP.

The sampling locations at both the ESP inlet and the ESP outlet were less than ideal with respect to upstream and downstream disturbances. Each location was provided with 4-in. pipe-size sampling ports. At the ESP inlet, the sampling was done through nine vertical ports installed in the top of the transition to the ESP inlet face. At this location, the duct was flared outward and divided by flow distribution (turning) vanes into three channels of more or less equal widths, each with three ports. The spacing of the ports was not uniform; thus, the traverses at that location were done "by the book" as nearly as possible using a 36-point traverse (four points per port, times nine ports), but the traverses did not conform completely to the standard traverse pattern. At the ESP outlet, there were horizontal ports in a vertical line down one side of the duct; a 40-point traverse was used there (five points per port, times eight ports).

All sampling was done with glass-lined probes and glass nozzles. The sampling trains used for the single-point sampling at the ESP outlet were conventional Method 5 trains with close-coupled filter ovens and reagent-impinger cases. The latter setup could not be used at the ESP inlet where the sampling entry was vertical, nor could it be used for the traversing methods at the ESP outlet. In the latter cases, small ovens were attached to the probes and 25-ft. long Teflon umbilical lines were used to carry the filtered sample gases to the impingers. These Teflon umbilicals were prepared for each run in the same manner as the impinger glassware and any material deposited in them was recovered like that in the first impinger and was combined with the latter.

Key components of the sampling equipment (pitot tubes, thermocouples, orifice meters, dry gas meters, and sampling nozzles) were calibrated before use in the field, and the calibrations were rechecked after sampling was complete. The results of these calibrations are on file at SRI. The field data for all the sampling runs were thoroughly documented. Each run was done within the allowable tolerances for leak rates. All

sampling runs which called for the traversing approach to sampling were done within 90 to 110% of the isokinetic rates, as indicated above. One particulate/metals traversing run failed the post-test leak check rather badly at the ESP outlet. The samples from the latter were discarded and the run was repeated. Similarly, one sampling run had to be repeated at the ESP inlet when the high negative pressure in the duct caused the filter to be ruptured during a traverse. Sufficient data were collected using standard sampling and analytical methods to ensure acceptable data completeness and the comparability of the measurements.

4.3 Material Balances

4.3.1 Trace metals

One exercise performed with respect to material balances of the trace metals was based on the premise that the amount of each metal in the coal would be found in two waste streams: 1) the slag or bottom ash sluiced to the ash pond and 2) the fly ash entrained at the inlet of the ESP. In principle, the three streams (coal, slag, and inlet fly ash) should provide a balance except for minor errors due to the water used for sluicing of the slag or due to fly ash deposits at locations preceding the ESP, such as economizer hoppers. (The analysis of the water indicates that it had no significant influence; the economizer ash was not sampled but should account for a small removal of fly ash compared to that in the main gas stream.)

No provision was made for measurement of the flow rate of slag from the furnace to the ash pond. Hence, the issue of material balances was addressed on the following basis (where arsenic is used as an example of all 12 trace metals of interest):

> One gram of coal contained 11.2 μg of arsenic (the concentration on May 4 was 11.2 μg/g).
>
> One gram of coal produced a total of 0.0839 g of ash (the concentration of ash in the coal on May 4 was 8.39%).
>
> The fraction of the ash from the coal that was entrained as fly ash at the ESP inlet was 0.241 (see Table 3.5). Hence, 1 gram of coal produced 0.0839 x 0.241 = 0.0202 g of fly ash at the ESP inlet.
>
> The amount of slag produced from 1 gram of coal was the difference between the total and the amount of fly ash: 0.0839 - 0.0202 = 0.0637 g.
>
> The slag contained arsenic at a concentration of 1.6 μg/g (see Table F.4, Appendix F). The slag from 1 gram of coal then contained 1.6 x 0.0637 = 0.102 μg of arsenic, which was 0.91% of the arsenic in 1 gram of coal.
>
> The gas stream at the ESP inlet contained arsenic at a concentration of 1595 $\mu g/Nm^3$ (Table 3.7) and fly ash at a concentration of 2.494 g/Nm^3

(Table 3.6). Thus, the mass ratio of arsenic to fly ash was 640 $\mu g/g$. The amount of arsenic in the gas stream produced by 1 gram of coal is given by 640 x 0.0202 = 12.9 μg, which is 115% of the arsenic in 1 gram of coal.

Of the arsenic in the coal, 116% was accounted for by the arsenic in the slag and the fly ash at the ESP inlet. (Parenthetically, the data indicate that virtually all of the arsenic left the boiler with the combustion gas, and hardly any exited in the slag.)

Table 4.4 shows the results of mass balance calculations based on the premise that the slag and the fly ash at the ESP inlet should account for all of each element that occurred in the coal. (As a matter of fact, the assumption was that the flue gas at the ESP inlet, not just the fly ash, contained all of the metal not found in the slag, since the combination of element amounts in the fly ash and the vapor state were combined in the calculations). The table lists daily recoveries of each metal, relative to the coal: 1) in the slag, 2) in the flue gas at the ESP inlet, and 3) in combination. The overwhelming impression from this table is the total recoveries were far too high to be acceptable. Only 4 of the 36 values are below 100%; for some of the metals, the amounts reported exceed those in the coal by several factors. A second impression is that errors in the analysis of the flue gas, not the slag, was the factor mainly responsible for the positive bias in total recovery.

An alternate consideration of material balances of the trace metals assumed that the amount of each element in the coal not found in the slag would be found in the combination of fly ash deposited in the ESP and fly ash (plus vapor) entrained at the ESP outlet. There was a possibility that the positive bias evident in most of the data for the ESP inlet concentrations would not occur in data based on analyses of the collected ash and outlet ash. The calculations for this second approach are again illustrated by actual data for arsenic, as follows:

The ESP ash contained arsenic at a concentration of 312 $\mu g/g$ on May 4. This ash represented 92.8% of the ash entering the ESP at a concentration of 2.494 g/Nm^3 (Table 3.5). The arsenic in the ESP ash thus was equivalent to a concentration in the gas stream of 312 x 0.928 x 2.494 = 722 $\mu g/Nm^3$.

The measured arsenic concentration at the ESP outlet was 87.8 $\mu g/Nm^3$ (Table 3.10). Thus, the total arsenic in the ESP and in the outlet gas stream can be represented by the concentration 722 + 87.8 = 810 $\mu g/Nm^3$.

The amount of arsenic in the two locations can be expressed as a ratio to the mass of fly ash entrained from the boiler (2.494 g/Nm^3): 810 $\mu g/Nm^3$ divided by 2.494 g/Nm^3 = 325 $\mu g/g$. As calculated previously, 1 gram of coal yields 0.0202 g of fly ash. Thus, the amount of arsenic accounted for in the ESP and the outlet gas stream is 325 x 0.0202 = 6.56 μg.

Table 4.4
Recovery of Trace Metals from the Coal in the Slag and the Flue Gas at the ESP Inlet

	Recovery %, slag			Recovery %, flue gas			Recovery %, total		
	May 4	May 5	May 6	May 4	May 5	May 6	May 4	May 5	May 6
As	0.9	0.5	1.2	115	159	268	116	160	269
Ba	76	48	53	90	69	121	167	117	174
Be	28	54	48	56	127	163	84	181	211
Cd	81	78	45	115	187	197	195	265	243
Cr	79	60	39	204	167	208	282	228	246
Co	55	40	43	186	149	234	241	190	277
Pb	47	31	27	474	301	544	521	333	571
Mn	6.1	5.9	7.2	96	708	164	102	713	171
Hg	4.6	4.4	3.2	567	490	210	572	494	213
Ni	60	74	75	58	76	102	118	150	177
Se	15	12	9.2	70	75	75	85	87	85
V	39	41	34	109	128	155	148	169	189

This amount of arsenic is 59% of the arsenic in the coal. Combined with that previously identified with the slag, 60% of the arsenic in the coal is accounted for. This figure is to be contrasted with the figure of 116% based on fly ash at the ESP inlet.

Table 4.5 summarizes the results of material balance calculations based on the second analytical approach. These results are far more acceptable than those based on the flue gas at the ESP inlet. The worst of the data are for mercury, which was clearly not determined acceptably by use of the Multiple Metals Train. The dominant factor in the recovery of most of the metals in and beyond the ESP was collection of ash in the ESP. The following tabulation gives the average fraction of the total collected in the ESP:

Arsenic	0.75	Lead	0.85
Barium	0.92	Manganese	0.61
Beryllium	0.87	Mercury	0.07
Cadmium	0.89	Nickel	0.86
Chromium	0.82	Selenium	0.66
Cobalt	0.77	Vanadium	0.84

4.3.2 Nonmetals

Section 3 points out that the data on acid gases at the ESP inlet were of unreliable quality and suggested, on the other hand, that the data at the ESP outlet were more credible. The results at the outlet (expressed in ppmv) are compared in the following tabulation with predicted values based on the concentrations of the nonmetals in the coal:

	May 4		May 5		May 6	
	Obsd	Calcd	Obsd	Calcd	Obsd	Calcd
HF	7.1	6.7	7.0	6.6	6.4	6.6
HCl	212	179	217	177	224	193
SO_2	1680	1726	1630	1694	1590	1705
H_3PO_4	<0.22	18.7	<0.19	15.9	<0.25	17.6

The average recoveries based on these data are:

- HF, 103%. Within experimental error, the recovery is 100%. Essentially all of the fluorine from the coal was found in the gas phase.

- HCl, 119%. The excess in the experimental results calls into question whether the coal analyses may be in error. Regardless, most of the chlorine from the coal is discharged in the gas phase.

Table 4.5
Recovery of Trace Metals from the Coal in Ash Collected in the ESP and Entrained at the ESP Outlet

	Recovery %, slag			Recovery %, ESP ash and flue gas			Recovery %, total		
	May 4	May 5	May 6	May 4	May 5	May 6	May 4	May 5	May 6
As	0.9	0.5	1.2	59	99	93	59	99	94
Ba	76	48	53	26	37	29	102	84	82
Be	28	54	48	20	65	39	48	119	87
Cd	81	78	45	39	97	40	120	176	86
Cr	79	60	39	58	70	56	136	130	95
Co	55	40	43	52	51	46	106	92	88
Pb	47	31	27	130	110	96	177	141	124
Mn	6.1	5.9	7.2	47	--[a]	--[a]	53	--[a]	--[a]
Hg	4.6	4.4	3.2	311	51	-0.9	316	55	2.3
Ni	60	74	75	12	23	17	72	96	92
Se	15	12	9.2	45	116	69	60	128	79
V	39	41	34	33	65	44	72	106	77

[a]Not reported because of evidence of permanganate contamination in the peroxide impinger.

- SO_2, 96%. Again, the nonmetal is primarily discharged in the gas phase. The balance of the sulfur, or a substantial part of it, is found as sulfate in the fly ash.

- H_3PO_4, <1%. Phosphorus, unlike the halogens and sulfur, is discharged mainly in the ash. The acid has a significant volatility, but this property is evidently overridden by the acid-base reaction between the acid and base in the ash.

4.4 Analytical Quality Control Results

4.4.1 Trace metals

Analysis of SRMs from NIST. Each of the laboratories used Standard Reference Materials (SRMs) from the National Institute of Standards and Technology (NIST) as part of the QA/QC methodology. Two of the reference materials employed were SRM 1632b for bituminous coal and SRM 1633a for fly ash. The reported results of analyses of these materials are presented in Table 4.6. The SRMs were analyzed by the same methods as those listed for samples in Appendix C.

Analysis of other reference materials, spikes, and blanks. Galbraith analyzed samples in two separate series. All of the samples in either series were process solids (coal, slag, or ESP ash). The results of the analyses of the QA/QC samples are given in Tables 4.7 and 4.8. The QA/QC samples included spikes and blanks and certain NIST reference materials different from the SRMs of coal and fly ash. One series of analyses was dominated by so-called "blank spikes" and solutions prepared from SRMs. The other series included "matrix spikes" for nearly every element (that is, a solution prepared from a sample and then spiked after original analysis with the analyte in question).

QA/QC data from Triangle Laboratories are presented in Tables 4.9 and 4.10. The tables present separately the data for samples from the Multiple Metals Train and process solids. For the train samples, duplicates and 5- or 10-fold dilutions were analyzed. The results are reported as RPD (relative percent difference) or "<IDL", which is shorthand for an analytical result that was less than five times the instrument detection limit and thus not reliable. Four kinds of solutions were used in the analysis of duplicates and diluted samples. First were the solutions prepared from the front half of an ESP inlet sample; next there was the corresponding front half solution from an ESP outlet sample; finally there were the back half of a blank train and the back half of an ESP inlet sample. Replication gave satisfactory results for the front half at the inlet but rarely for the other instances, mainly because of the low concentrations of analyte being determined. For the process solids, a duplicate of a coal preparation was analyzed, and a diluted solution prepared from a slag sample was analyzed.

Tables 4.9 and 4.10 also show that Triangle measured recovery of each analyte in a spiked blank solution and checked the blank solution itself. Finally, before and after each set of sample solutions was analyzed, checks on apparent analyte concentrations were made with two interference check solutions. One of the solutions contained the

Table 4.6
Analytical Results for Standard Reference Materials[a]
(Data are percent recovery)

	SRM 1632b (coal)		SRM 1633a (fly ash)		
	U. of Mo.	Brooks Rand	Galbraith	Triangle	SRI
Arsenic	96	91	126	107	
Barium	85		88	75	87
Beryllium			81	93	
Cadmium			92	1140	64
Chromium	104		81	89	78
Cobalt	102		97	233	73
Lead			94	82	119
Manganese	97		87	88	77
Mercury	104	100	100		
Nickel	121		92	89	74
Selenium	60	92	48	70	
Vanadium	98		91	96	89

[a]Blanks indicated metals not reported by the laboratory in question.

Table 4.7
QA/QC Data from the First Analytical Series at Galbraith Laboratories
(Related to process solids)

Analyte	Control std.	Ref. concn	Obsd. concn.
Arsenic	Blank spike Blank spike	2.00 μg/mL	1.88 μg/mL 2.06 μg/mL
	Method blank Method blank		-0.0003 μg/ml -0.0007 μg/ml
	NIST SRM 2704 Method blank	23.4 μg/g	45 μg/g -0.006 μg/mL
Barium	NIST SRM 2704 Method blank	414 μg/g	400 μg/g 0.01 μg/mL
Beryllium	Blank spike Method blank	2.0 μg/mL	2.2 μg/mL 0.002 μg/mL
Cadmium	NIST SRM 2704 NIST SRM 2704	2.60 μg/mL	2.44 μg/mL 2.44 μg/mL
	NIST SRM 1643c	12.2 μg/mL	11.7 μg/mL
	Method blank Method blank		0.04 μg/mL -0.01 μg/mL
Chromium	Blank spike Method blank	10.0 μg/mL	10.9 μg/mL 0.46 μg/mL
	NIST SRM 2704 Method blank	135 μg/g	134 μg/g 0.033 μg/mL
Cobalt	NIST SRM 2704 Method blank	14.0 μg/g	18.3 μg/g 0.05 μg/mL
Lead	NIST SRM 2704 Method blank	161 μg/g	166 μg/g 0.00 μg/mL
Manganese	NIST SRM 2704 Method blank	555 μg/g	529 μg/g 0.05 μg/mL
Mercury	NIST SRM 1643c Method blank	1.47 μg/mL	1.46 μg/mL 0.00 μg/mL
	NIST SRM 1643c Method blank	1.47 μg/mL	1.46 μg/mL 0.0001 μg/mL
Nickel	NIST SRM 2704 Method blank	44.1 μg/g	97.0 μg/g 0.032 μg/mL
Selenium	Method blank Blank spike Method blank	2.00 μg/mL	0.00 μg/mL 2.02 μg/mL -0.25 μg/mL
Vanadium	NIST SRM 2704 Method blank	95 μg/g	89 μg/g 0.005 μg/mL

Table 4.8
QA/QC Data from Second Analytical Series at Galbraith Laboratories
(Related to process solids)

Analyte	Control std.	Ref. concn.	Obsd. concn.
Arsenic	Matrix spike Blank spike	2.01 μg/mL 2.00 μg/mL	2.01 μg/mL 1.95 μg/mL
Barium	Matrix spike Blank spike Method blank	2.00 μg/mL 2.00 μg/mL	2.28 μg/mL 2.16 μg/mL 0.028 μg/mL
Beryllium	Matrix spike Blank spike Method blank	2.00 μg/mL 2.00 μg/mL	2.40 μg/mL 2.02 μg/mL 0.036 μg/mL
Cadmium	Matrix spike Blank spike Method blank	2.00 μg/mL 2.00 μg/mL	2.64 μg/mL 2.19 μg/mL 0.019 μg/mL
Chromium	Matrix spike Blank spike Method blank	2.00 μg/mL 2.00 μg/mL	2.33 μg/mL 2.00 μg/mL 0.1 μg/mL
Cobalt	Matrix spike Blank spike Method blank	2.00 μg/mL 2.00 μg/mL	2.51 μg/mL 2.16 μg/mL 0.039 μg/mL
Lead	Matrix spike Blank spike Method blank	2.00 μg/mL 4.00 μg/mL	2.44 μg/mL 3.90 μg/mL 0.022 μg/mL
Manganese	Matrix spike Blank spike Method blank	2.00 μg/mL 2.00 μg/mL	2.47 μg/mL 2.21 μg/mL 0.003 μg/mL
Mercury	NIST SRM 8408 Method blank	100 μg/g	106 μg/g -0.013 μg/mL
Nickel	Matrix spike Blank spike Method blank	2.00 μg/mL 2.00 μg/mL	2.34 μg/mL 2.03 μg/mL 0.003 μg/mL
Selenium	Blank spike Method blank	2.00 μg/mL	1.89 μg/mL 0.0015 μg/mL
Vanadium	Matrix spike Blank spike Method blank	2.00 μg/mL 2.00 μg/mL	2.37 μg/mL 2.20 μg/mL 0.025 μg/mL

Table 4.9
QA/QC Data from Analyses of Multiple Metal Train Samples
at Triangle Laboratories

	Sample[a]			Blank spike[b]		Interference check[b,c]	
	Type	Duplicate	Dilution	Exptd.	Found	Without analyte	With analyte
As	Inlet/FH	RPD 6.4%		1000	1075	-36	
	Outlet/FH		RPD 62%	0	-30		
	Blk/BH	<IDL		5000	5455		
	Inlet/BH		<IDL	0	-38		
				5000	5349	-40	
Ba	Inlet/FH	RPD 5.5%		1000	994	5	470
	Outlet/FH		RPD 99%	0	3		
	Blk/BH	<IDL		5000	5113		
	Inlet/BH		<IDL	0	4		
				5000	5075		
				0	3		
				5000	5095		
				0	4	5	467
Be	Inlet/FH	RPD 1.3%		400	394	0.7	453
	Outlet/FH		<IDL	0	0.3		
	Blk/BH	<IDL		2000	2037		
	Inlet/BH		<IDL	0	0.8		
				2000	1955		
				0	0.6		
				2000	2013		
				0	0.3		
				2000	2020		
				0	0.3	0.9	455
Cd	Inlet/FH	RPD 1.5%		500	475	19	845
	Outlet/FH		<IDL	0	3		
	Blk/BH	<IDL		2500	2419		
	Inlet/BH		<IDL	0	3		
				2500	2391		
				0	3		
				2500	2436		
				0	3		
				2500	2406		
				0	1	20	849

Table 4.9 Continued
QA/QC Data from Analyses of Multiple Metal Train Samples
at Triangle Laboratories

	Sample[a]			Blank spike[b]		Interference check[b,c]	
	Type	Duplicate	Dilution	Exptd.	Found	Without analyte	With analyte
Co	Inlet/FH	RPD 3.1%		1000	997	15	438
	Outlet/FH		<IDL	0	2		
	Blk/BH	<IDL		5000	5140		
	Inlet/BH		<IDL	0	-2		
				5000	5051		
				0	0		
				5000	5117		
				0	1	13	433
Cr	Inlet/FH	RPD 1.8%		1000	1002	-1.2	443
	Outlet/FH		RPD 84%	0	0.6		
	Blk/BH	<IDL		5000	5150		
	Inlet/BH		<IDL	0	-0.2		
				5000	5140		
				0	-0.2		
				5000	5193		
				0	-0.8	-0.2	438
Mn	Inlet/FH	RPD 0.1%		1000	980	13	463
	Outlet/FH		RPD 51%	0	0.4		
	Blk/BH	<IDL		5000	5116		
	Inlet/BH		<IDL	0	0.9		
				5000	5242		
				0	0.9		
				5000	5143		
				0	0.6		
				5000	5139		
				0	0.7	13	467
Ni	Inlet/FH	RPD 1.4%		1000	1017	-0.7	882
	Outlet/FH		RPD 85%	0	1.3		
	Blk/BH	<IDL		5000	5269		
	Inlet/BH		<IDL	0	-0.9		
				5000	5321		
				0	-1.9		
				5000	5298		
				0	0.4	-2	884

Table 4.9 Concluded
QA/QC Data from Analyses of Multiple Metal Train Samples
at Triangle Laboratories

	Sample[a]			Blank spike[b]		Interference check[b,c]	
	Type	Duplicate	Dilution	Exptd.	Found	Without analyte	With analyte
Pb	Inlet/FH	RPD 3.8%		1000	940	-194	795
	Outlet/FH		RPD 45%	0	4		
	Blk/BH	<IDL		5000	4899		
	Inlet/BH		<IDL	0	2		
				5000	4910		
				0	15		
				5000	4941		
				0	-1		
				5000	4874		
				0	-5	-170	784
V	Inlet/FH	RPD 5.2%		1000	1006	3	463
	Outlet/FH		RPD 99%	0	8		
	Blk/BH	<IDL		5000	5259		
	Inlet/BH		<IDL	0	10		
				5000	5216		
				0	7		
				5000	5192		
				0	8	2	454

[a]Notation <IDL means that the value obtained by analysis was less than five times the instrument detection limit.
[b]Concentration in μg/L.
[c]Metal concentration in μg/L. Reference value for analytes when present are found in the following list:

Ba	500	Co	500	Ni	1000
Be	500	Cr	500	Pb	1000
Cd	1000	Mn	500	V	500

Table 4.10
QA/QC Data from Analyses of Process Solids at Triangle Laboratories

	Sample[a]			Blank spike[b]		Interference check[b,c]	
	Type	Duplicate	Dilution	Exptd.	Found	Without analyte	With analyte
As				50.0	48.8		
				0	-0.8		
				50.0	52.1		
				0	0.6		
				50	48.6		
				0	-1.4		
				50	48.7		
				0	-1.7		
Ba	Coal	RPD 4.2%		1000	978	40.5	491
	Slag		RPD 4.1%	0	-3		
				5000	4892		
				0	-2		
				5000	4883		
				0	-2		
				5000	5095	41	487
Be	Coal	RPD 3.2%		400	388	-0.03	494
	Slag		<IDL	0	-0.3		
	Inlet/FH	<IDL		2000	1923		
	Inlet/FH		<IDL	0	-0.3		
				2000	1862		
				0	-0.1	-0.3	470
Cd	Coal	<IDL		500	471	18	965
	Slag		<IDL	0	-1.8		
				2500	2317		
				0	-3	18	913
Co	Coal	RPD 12.8%		1000	911	179	529
	Slag		<IDL	0	10		
				5000	4576		
				0	-7		
				5000	4622		
				0	-4	160	532

Table 4.10 Continued
QA/QC Data from Analyses of Process Solids at Triangle Laboratories

	Sample[a]			Blank spike[b]		Interference check[b,c]	
	Type	Duplicate	Dilution	Exptd.	Found	Without analyte	With analyte
Cr	Coal	RPD 0.4%		1000	976	-0.3	489
	Slag		RPD 5.9%	0	4.5		
				5000	4776		
				0	2.6		
				5000	4703		
				0	2		
				5000	4693		
				0	2	2	477
Mn	Coal	RPD 0.2%		1000	974	8.5	501
	Slag		RPD 7.1%	0	-2.2		
				5000	4796		
				0	-2		
				5000	4748		
				0	-2		
				5000	5143	7.6	502
Ni	Coal	RPD 2.1%		1000	985	1.8	1002
	Slag		<IDL	0	1.5		
				5000	4726		
				0	3.8		
				5000	4731		
				0	2.5		
Pb	Coal	RPD 4.0%		1000	956	-138	973
	Slag		<IDL	0	4		
				5000	4705		
				0	10		
				5000	4656		
				0	15	-201	956

Table 4.10 Concluded
QA/QC Data from Analyses of Process Solids at Triangle Laboratories

	Sample[a]			Blank spike[b]		Interference check[b,c]	
	Type	Duplicate	Dilution	Exptd.	Found	Without analyte	With analyte
Se				50	49.3		
				0	-1.4		
				50	47.6		
				0	-0.6		
				50	51.2		
				0	-1		
V	Coal	RPD 1.8%		1000	989	-5.8	493
	Slag		RPD 4.1%	0	-1.5		
				5000	4873		
				0	0.8		
				5000	4889		
				0	-0.8		
				5000	5192	-5.4	490
				0	8		

[a]Notation RPD means relative percent deviation. Notation <IDL means that the value obtained by analysis was less than five times the instrument detection limit.
[b]Concentration in $\mu g/L$.
[c]Metal concentration in $\mu g/L$. Reference value for analytes when present are found in the following list:

Ba	500	Co	500	Ni	1000
Be	500	Cr	500	Pb	1000
Cd	1000	Mn	500	V	500

metals possibly responsible for interference but was free of the analyte in question; the second solution contained the analyte at a concentration not yet specified.

4.4.2 Anions

The principal QA/QC procedures with respect to anions, whether derived from acid gases in flue gas sampling or incorporated in solids, were to determine the recovery of spikes in the solutions being analyzed. Normally, spikes were added at twice and five times the measured concentrations of the given analytes. Recoveries were in the range 90-110%.

4.4.3 Aldehydes

QA/QC measures for the analysis of aldehydes consisted of analyses of reagent blanks and analyses of impinger solutions from a blank train. Data on the reagent blanks are given in Appendix G. Analyses of the blank train yielded results that were similar to those for the reagent blanks.

4.4.4 Volatile organic compounds

Both laboratories that participated in the analysis of volatile organics were prepared to identify a number of compounds in addition to those aromatic hydrocarbons previously discussed, which were of primary interest. Table C.6 in Appendix C lists the so-called target compounds in the SRI analysis; Table C.7 gives the similar list of target compounds in the analysis performed at Lancaster Laboratories.

Preliminary identification of each compound was based on the computer response to the principal ion observed by mass spectroscopy at the chromatographic retention time of that compound (for benzene, mass 78). Preliminary results on this basis were then confirmed or discarded on the basis of an examination of the entire mass spectrum associated with the retention time. If sufficient agreement between the authentic mass spectrum of the compound and the compound evolved from the chromatographic column was not obtained, the tentative identification was discarded.

The nominal detection limits of the compounds that were subject to identification are included in the tables in Appendix G. For most of the compounds, the value is 5 ng, which corresponds to a concentration in the smallest volume of flue gas sampled of 1 $\mu g/Nm^3$. This is a quite conservative value of the detection limit. Efforts to define the detection limits more rigorously, by the procedure described in 40 CFR Part 136, indicate that typically the detection limit may be of the order of 0.5 ng.

The procedures with respect to QA/QC in the analysis of volatile organic compounds in the flue gas were essentially three-fold: 1) to determine the amounts of measurable compounds in blanks, 2) to determine the extent of recovery of certain spiking compounds, called surrogates, and 3) to determine the repeatability of analyte concentrations in multiple measurements.

Laboratory method blanks consisted of Tenax and Tenax/charcoal sampling tubes that had been prepared for use but retained in the laboratory. Field blanks were among the samples brought back to the laboratory from the field; each field blank consisted of the three components from the VOST (the two sorbent tubes and condensate), which were generated simply by performing a leak check with the assembled apparatus at the duct sampling platform. The practice with respect to field blanks was to collect one blank each time that samples from the flue gas were collected. Trip blanks are sorbent tubes that were prepared as though they would be used in the field but that were merely transported to and from the field and never removed from the sealed containers.

Generally speaking, the laboratory blanks were found to contain undetectable amounts of the aromatic hydrocarbons or, for that matter, any of target compounds. There was one recorded exception: in one laboratory blank analyzed at Lancaster, 5 ng of benzene was detected. This would have produced a sample concentration of just 1 $\mu g/Nm^3$ in the smallest volume of flue gas sampled — a relatively insignificant concentration in the comparison with most of the actual concentrations measured. Despite the near absence of target compounds in the laboratory blanks, there were always some unidentified compounds. The amounts of these unknowns, however, were limited to about 25 ng.

The data for aromatic hydrocarbons in field blanks are included in Table G.2, Appendix G, with the data for these compounds in actual flue-gas samples. For benzene in individual sampling tubes of Tenax, the blank values were 6 ng or less; for this compound in Tenax/charcoal, the maximum value was 17 ng. For toluene in Tenax, the maximum was 27 ng; for toluene in Tenax/charcoal, the only large value of 104 ng was encountered. The effect of the blank values was taken into account in the linear regressions that led to the reported representative concentrations of the two analytes.

To assess the probable recoveries of the analytes of interest, the actual recoveries of selected spiking compounds, referred to as surrogates, were determined. These compounds were clearly distinguishable in most instances because they were isotopically labeled; the only unlabeled surrogate was 4-bromofluorobenzene, a compound not expected in the flue gas sampled. The results on the recoveries of the surrogates are tabulated at the end of this paragraph. These results are consistent with the requirements of SW-846 Method 8290. Other quality control data of interest are the recoveries of surrogate compounds injected onto each sampling tube just before analysis was started; the recoveries were as follows:

	SRI	Lancaster
Amount of surrogate spike, ng	250	50
Amount of spike recovered, %		
Tenax		
1,2-dichloroethane-d_4	106 ± 3	
1,2-dichloroethane-d_5		94 ± 6
toluene-d_8	125 ± 15	104 ± 25
4-bromofluorobenzene	69 ± 43	99 ± 26
Tenax/charcoal		
1,2-dichloroethane-d_4	107 ± 3	
1,2-dichloroethane-d_5		83 ± 25
toluene-d_8	115 ± 2	90 ± 18
4-bromofluorobenzene	109 ± 5	82 ± 32

The recoveries of spikes of these surrogates in laboratory water, simulating condensates from VOST, were at levels comparable to those listed above.

4.4.5 Dioxins and furans

Three classes of isotopically labeled compounds were used for QA/QC measures in the sampling and analysis of dioxins and furans:

- Surrogate. Before the XAD sampling resin was sent to the field, it was fortified with an isotopically labeled surrogate standard: the compound 2,3,7,8-TCDD, with all substituents bearing the label chlorine-37. This compound was included in the sample analysis; it served the purpose of showing how well compounds in the gas sample could survive all the steps in sampling and analysis.

- Internal standards. Prior to the extraction of the resin in the laboratory, subsequent to field sampling, 14 internal standards were added. These were all compounds labeled with carbon-13. They consisted of both dioxins and furans; they included isomers of the compounds to be expected in a natural environment with four, five, six, seven, and eight chlorine substituents. The degrees of recoveries of these internal standards indicated how well compounds from the source sampled survived the laboratory analytical steps. The internal standards also provided response factors that are used in evaluating concentrations of the compounds collected in the field.

- Recovery standards. The 2,3,7,8-TCDD and 1,2,3,7,8,9-HxCDD compounds with carbon-13 labels (compounds different from those used as internal standards) were added to an extract just before it was subjected to GC/MS analysis. These standards provided the basis for assigning recovery levels to the surrogate and the internal standards.

In the three samples drawn from the gas duct at the ESP outlet, the surrogate recoveries were as follows:

May 4	22%
May 5	25%
May 6	20%

These were all below the minimum of 40% considered adequate. It was, of course, not practical to repeat the sampling in an effort to meet the minimum recovery desired. The interpretation of the data on samples evidently in the sample stream is that the actual concentrations may have been somewhat higher than reported, but even then the concentrations would be below nominal detection limits and below levels of practical concern.

Recoveries of the internal standards were nearer the acceptable range of 40-120%. Approximately two-thirds of the 14 compounds were recovered within the specified limits with each field sample. Once again, there was not a practical recourse to accepting results outside the specified range, but at the same time the small amounts of sample compounds identified made this shortcoming acceptable.

The identification and quantification of compounds were based on the following criteria:

1) The GC retention time had to be within -1 to +3 s of the corresponding isotopically labeled compound.

2) The M and M+2 peaks, or the M+2 and M+4 peaks from a compound had to maximize within 2 s.

3) The ratio of the selected pair of peaks specified above had to be within the range specified in Method 8290 of SW-846.

Section 5

REFERENCES

1. U.S. Environmental Protection Agency. Methods Manual for Compliance with BIF Regulations, EPA/530-SW-010, December 1990.

2. U.S. Environmental Protection Agency. Test Methods for Evaluating Solid Waste, EPA/SW-846, Third Edition, November 1986 (Revision 1, July 1992).

3. N. S. Bloom. "Mercury Speciation in Flue Gas: Overcoming the Analytical Difficulties," paper presented at conference entitled Managing Hazardous Air Pollutants: State of the Art, Washington, DC, November 4-6, 1991.

4. W. J. Dixon. "Processing Data for Others," Biometrics 9, No. 1, p. 8 (1953).

5. G. P. Huffman, F. E. Huggins, N. Shah, and J. Zhao. "Speciation of Critical Elements in Coal and Combustion Ash by XAFS Spectroscopy," presented at Trace Elements Workshop: Trace Element Transformations in Coal-Fired Power Systems, Scottsdale, AZ, April 19-22, 1993.

APPENDICES

A. GLOSSARY OF TECHNICAL TERMS

B. EXAMPLES OF CALCULATIONS

C. SAMPLING AND ANALYTICAL PROCEDURES

D. PROCESS STREAM FLOW RATES AND CHARACTERIZATION DATA

E. BLANK DATA FOR METALS

F. ANALYTICAL DATA USED IN CALCULATIONS: INORGANIC SPECIES (Trace Metals and Anions)

G. ANALYTICAL DATA USED IN CALCULATIONS: ORGANIC SPECIES (Aldehydes, Volatile Organics, Dioxins, and Furans)

H. PLUME SIMULATION SAMPLING (Description of Condensibles Air Dilution Train)

I. ANALYTICAL DATA NOT USED IN CALCULATIONS: NAA Data for a Supplemental List of Metals

APPENDIX A

GLOSSARY OF TECHNICAL TERMS

GLOSSARY OF TECHNICAL TERMS

AAS	atomic absorption spectoscopy
acfm	actual cubic feet per minute
Btu	British thermal unit
CADT	Condensibles Air Dilution System (device for plume simulation)
CI	Confidence interval
CT&E	Commercial Testing & Engineering Company
CVAAS	cold-vapor AAS
CVAFS	cold-vapor atomic fluorescence spectroscopy
DNPH	2,4-Dinitrophenylhydrazine
EPRI	Electric Power Research Institute
ESP	electrostatic precipitator
FCEM	Field Chemical Emissions Monitoring
g	gram
gal	gallon
GC	gas chromatography
GC/MS	gas chromatography/mass spectroscopy
GFAAS	graphite furnace AAS
HpCDD(F)	Heptachlorodibenzodioxin (furan)
HPLC	High performance liquid chromatography
HxCDD(F)	Hexachlorodibenzodioxin (furan)
IC	ion chromatography
ICP	inductively coupled argon plasma emission spectroscopy
ID	induced draft (type of fan)
IDL	instrument detection limit
INAA	instrumental neutron activation analysis (in this report, the same as NAA)
J	joule
L	liter
lb	pound
mg	milligram
mL	milliliter
MMBtu	million Btu
MS	mass spectrometry
M29	Method 29 (EPA method for metals sampling and analysis)
NAA	neutron activation analysis
ND	not detected
NIST	National Institute of Science and Technology
Nm^3	normal cubic meter (gas volume at 273.15 K and 1 atm, for an O_2 concentration of 3% by volume)
OCDD(F)	Octachlorodibenzodioxin (furan)
PAH	Polycyclic aromatic hydrocarbon
PeCDD(F)	Pentachlorodibenzodioxin (furan)
pg	picogram
PISCES	Power Plant Integrated Systems: Chemical Emission Studies

GLOSSARY OF TECHNICAL TERMS (concluded)

ppb	ppb (by weight, in a solid)
ppm	ppm (by weight, in a solid)
ppmv	parts per million by volume (in flue gas)
QA/QC	Quality Assurance/Quality Control
RPD	relative percent deviation
SCA	specific collecting area (of an ESP), in ft^2/1000 acfm
SIE	selective ion electrode
SRI	Southern Research Institute
SRM	Standard Reference Material
SW 846	EPA publication detailing sampling and analytical procedures for various substances, including so-called air toxics
TCDD(F)	Tetrachlorodibenzodioxin (furan)
VOST	Volatile Organic Sampling Train
W	watt
XAD	Resin for adsorbing organic vapors
μg	micrograms
μg/g	micrograms per gram
$\mu g/Nm^3$	micrograms per normal cubic meter

APPENDIX B

EXAMPLES OF CALCULATIONS

EXAMPLES OF CALCULATIONS

Composition of Combustion Gas from Coal

Table B.1 illustrates the calculation of the concentrations of selected components of the combustion gas from coal. The example uses a hypothetical ultimate analysis and shows for combustion gas containing 3% O_2 the expected concentrations of SO_2, HCl, and HF if the corresponding nonmetallic elements are completely converted to these gases. The example also shows the maximum possible concentration of fly ash, assuming a coal with 10% ash, for the selected reference temperature. This theoretical concentration serves as the reference for calculating the proportions of bottom ash and fly ash, for a given determined concentration of fly ash.

Material Balance

Calculations of material balance are illustrated in Section 4.3.1.

Emission Factors

Calculation of emission factors is illustrated in Section 3.9.

Table B.1
Calculation of Concentrations of Components of the Combustion Gas from Coal
(Assumes 100 g coal and just enough air to leave a balance of 3% O_2)

Coal constituent			Moles of O_2 required	Combustion gas	Moles of product	Moles of dry gas
Element	%	Moles				
Carbon	60	4.9954	4.9954	CO_2	4.9954	4.9954
Hydrogen	4	3.9683	0.9921	H_2O	1.9841	0
Nitrogen	1	0.0714	0	N_2	0.0357	0.0357
Sulfur	3	0.0936	0.0936	SO_2	0.0936	0.0936
Oxygen	10	0.6250	-0.6250	--	--	--
Chlorine	0.1	0.0028	0	HCl	0.0028	0.0028
Fluorine	0.01	0.0005	0	HF	0.0005	0.0005
	Total		5.9875			5.1280

Moles N_2 supplied in air to burn coal with a residue of 0% O_2

$= 5.9875\ (79.1/20.9) = 22.6608$

Total moles of gas with a residue of 0% O_2

$= 5.1280 + 22.6608 = 27.7888$

Total moles of gas with sufficient combustion air to leave a residue of 3% O_2

$27.7888\ (20.9/\{20.9-3.0\}) = 32.4461$

Total volume of gas =

$32.4461\ (RT) = 727.181$ liters at $T = 273.15$ K and $P = 1$ atm

Thus, volume per 100 g coal = 0.7272 Nm^3

Concentrations summarized:

SO_2	0.0936/32.4461 = 0.00288 (2880 ppmv)
HCl	0.0028/32.4461 = 0.000086 (86 ppmv)
HF	0.0005/32.4461 = 0.000018 (18 ppmv)
Ash	Theoretical maximum with 100% entrainment, for 10% ash in coal, 10/0.7804 = 12.81 g/Nm^3

APPENDIX C

SAMPLING AND ANALYTICAL PROCEDURES

Table C.1
Sampling Methods for Flue Gas Streams

Type of sample	Sampling method	Sampling media
Multiple metals	Multiple Metals Train. Described in EPA Method 29 to be published in 40 CFR Part 60.	For particulate matter: 1) Filter For vapors: 2) Impingers containing H_2O_2 and HNO_3 3) Impingers containing $KMnO_4$ and H_2SO_4
Acid gases	Method 5 train equipped with alkaline impinger solutions.	Impingers containing a buffer mixture of $NaHCO_3$ /Na_2CO_3 and H_2O_2.
Aldehydes	Method 5 train equipped with an appropriate absorbing solution.	Impingers containing an acidified solution of 2,4-dinitrophenyl-hydrazine.
Volatile organics	Volatile Organic Sampling Train. SW-846 Method 0030.	1) Tenax sorption tube 2) Tenax/charcoal sorption tube 3) Condensate of flue gas moisture.
Dioxins, furans	Modified Method 5 Sampling Train. SW-846 Method 0010.	1) Filter 2) XAD resin 3) Impingers containing water.
Mercury vapor	Train with solid sorbents, described by Bloom.	1) Two soda lime traps in tandem, followed by 2) Two iodated carbon traps in tandem.

Table C.2
Types of Samples Collected from Gas Streams in Different Locations

Location	Types of samples	Sampling mode
ESP inlet	Multiple metals	Traverse
	Anions	Single point
ESP outlet	Multiple metals	Traverse
	Anions	Single point
	Aldehydes	Single point
	Volatile organics	Single point
	Dioxins, furans	Traverse
Stack	Mercury vapor	Single point (with simulated plume dilution and cooling).

Table C.3
Analytical Methods for Coal[a]

Parameter	Method
Proximate analysis	ASTM D3172
Ash	ASTM D3174
Moisture	ASTM D3173
Volatile matter	ASTM D3175
Ultimate analysis	ASTM D3176
Carbon	ASTM D5373
Hydrogen	ASTM D5373
Nitrogen	ASTM D5373
Sulfur	ASTM D4239
Chlorine	ASTM D4208
Fluorine	ASTM D3761
Calorific value	ASTM D2015

[a]Procedures employed by Commercial Testing and Engineering Company for the parameters listed. Trace metals were determined in other laboratories (see Table B.2).

Table C.4
Methods of Analysis of Trace Metals by Selected Laboratories[a]

	Galbraith	Triangle	SRI
As	GFAAS	GFAAS	--
Ba	ICP	ICP	ICP
Be	ICP	ICP	--
Cd	GFAAS	ICP	GFAAS
Cr	ICP	ICP	ICP
Co	ICP	ICP	ICP
Hg	CVAAS	CVAAS	--
Mn	ICP	ICP	ICP
Ni	ICP	ICP	ICP
Pb	GFAAS	ICP	GFAAS
Se	GFAAS	GFAAS	--
V	ICP	ICP	ICP

[a]Not listed are 1) the University of Missouri (neutron activation analysis) and 2) Brooks Rand (GFAAS for arsenic and selenium and cold-vapor atomic fluorescence for mercury).

Table C.5
Aldehydes and Ketones Identified by High Performance Liquid Chromatography

Compound	Structure
Formaldehyde	$CH_2 = 0$
Acetaldehyde	$CH_3\text{-}CH_2 = 0$
Acrolein	$CH_2 = CH\text{-}CH = 0$
Acetone	$(CH_3)_2\text{-}C = 0$
Crotonaldehyde	$CH_3CH = CHCH = 0$
2-Butanone	$CH_3C(= 0)\ CH_2CH_3$
Benzaldehyde	$C_6H_5\text{-}CH = 0$
n-Pentanal	$CH_3(CH_2)_3\text{-}C = 0$
m-Tolualdehyde	$CH_3C_6H_4\text{-}CH = 0$
n-Hexanal	$CH_3(CH_2)_4CH = 0$

*The detection limit of each compound is approximately 0.5 μg.

Table C.6
Volatile Organic Compounds Identifiable in Samples from VOST (Analysis at Southern Research Institute)[a]

Compound	Detection limit, ng
Chloromethane	5
Vinyl chloride	5
Bromomethane	10
Chloroethane	10
1,1-Dichloroethene	5
Acetone	10
Methyl iodide	5
Carbon disulfide	20
Methylene chloride	5
trans-1,2-Dichloroethene	5
1,1-Dichloroethane	5
2-Butanone	20
Chloroform	5
1,1,1-Trichloroethane	10
Carbon tetrachloride	5
Benzene	5
1,2-Dichloroethane	5
Trichloroethene	5
1,2-Dichloropropane	5
Bromodichloromethane	5

Table C.6 Continued
Volatile Organic Compounds Identifiable in Samples from VOST (Analysis at Southern Research Institute)[a]

Compound	Detection limit, ng
cis-1,3-Dichloropropene	5
2-Hexanone	5
Toluene	5
trans-1,3-Dichloropropene	5
1,1,2-Trichloroethane	5
Tetrachloroethene	5
4-Methyl-2-pentanone	5
Dibromochloromethane	5
Ethylbenzene	5
m- & p-Xylene	5
o-Xylene	5
Styrene	5
Bromoform	5
1,1,2,2-Tetrachloroethane	5

[a]Analysis by GC/MS (low resolution).

Table C.7
Volatile Organic Compounds Identifiable in Samples from VOST (Analysis at Lancaster Laboratories)[a]

Compound	Detection limit, ng
Trichlorofluoromethane	5
1,1-Dichloroethene	5
Methylene chloride	5
1,1-Dichloroethane	5
cis-1,2-Dichloroethene	5
Chloroform	5
1,1,1-Trichloroethane	5
Carbon tetrachloride	5
1,2-Dichloroethane	5
Benzene	5
Trichloroethene	5
1,2-Dichloropropane	5
cis-1,3-Dichloropropene	5
Toluene	5
trans-1,3-Dichloropropene	5
1,1,2-Trichloroethane	5
Tetrachloroethene	5
Chlorobenzene	5
Ethyl Benzene	5
m/p-Xylene	5
o-Xylene	5
Styrene	5
1,1,2,2-Tetrachloroethane	5

[a]Analysis by GC/MS (low resolution).

Table C.8
Dioxins and Furans Identifiable in Samples from the Modified Method 5 Sampling Train[a]

Compound[b]	Detection limit, pg
2,3,7,8-TCDD	20
2,3,7,8-TCDF	20
1,2,3,7,8-PeCDD	100
1,2,3,7,8-PeCDF	100
2,3,4,7,8-PeCDF	100
1,2,3,4,7,8-HxCDD	100
1,2,3,4,7,8-HxCDF	100
1,2,3,6,7,8-HxCDD	100
1,2,3,6,7,8-HxCDF	100
1,2,3,7,8,9-HxCDD	100
1,2,3,7,8,9-HxCDF	100
2,3,4,6,7,8-HxCDF	100
1,2,3,4,7,8,9-HpCDD	100
1,2,3,4,7,8,9-HpCDF	100
1,2,3,4,6,7,8-HpCDD	100
1,2,3,4,6,7,8-HpCDF	100
OCDD	200
OCDF	200

[a]Analysis by GC/MS (high resolution).
[b]T=tetra Hp=hepta
Pe=penta O=octa
Hx=hexa
DD=dibenzodioxin
DF=dibenzofuran

APPENDIX D

PROCESS STREAM FLOW RATES AND CHARACTERIZATION DATA

Table D.1
Process Stream Flow Rates and Characterization Data

	Units	08/17/93 Run 1	08/18/93 Run 2	08/19/93 Run 3	Average	Measured (M) or Calculated (C)
Stream						
Coal	lb/hr	181600	179900	178800	180100	M
Coal ash	lb/hr	15200	15400	15400	15300	M
Unit load	MW	248	249	248	248	M
Bottom ash	lb/hr	11600	11000	11200	11300	C
Collected fly ash	lb/hr	3340	4130	3940	3800	C
ESP Inlet Gas						
Flow Rate	Nm^3/min	12670	12640	11710	12340	M
Particulate load	g/Nm^3	2.494	3.021	2.874	2.796	M
Ash	g/min	31600	38180	33650	34480	C
Moisture	%	8.2	7.0	7.3	7.5	M
Oxygen	%	7.5	7.8	8.6	8.0	M
Temperature	°F	290	285	282	286	M
ESP Outlet						
Flow Rate	Nm^3/min	10740	11240	11550	11180	M
Particulate load	g/Nm^3	0.1798	0.1851	0.1771	0.1807	M
Ash	g/min	1930	2080	2050	2020	C
Moisture	%	6.7	7.4	7.1	7.1	M
Oxygen	%	9.0	8.3	7.8	8.4	M
Temperature	°F	311	313	311	312	M

APPENDIX E

BLANK DATA FOR METALS

(Blank Data for Organics
are Included in Appendix G)

Table E.1
Comparison of Metal Amounts in the Sample and the Blank in One Run at the ESP Inlet
(May 4, 1993)

Metal	Phase	Sample quantity, µg	Blank quantity, µg	Blank as % of sample
Arsenic	solid	1790	32.8	1.8
	gas	2.3	2.4	104
Barium	solid	3800	101	2.7
	gas	2.1	0.6	28
Beryllium	solid	129	0.49	0.38
	gas	0.11	0.12	109
Cadmium	solid	157	5.3	3.4
	gas	1.4	0.4	29
Chromium	solid	2700	35.5	1.3
	gas	1.7	0.6	35
Cobalt	solid	892	4.3	0.48
	gas	0.85	0.90	106
Lead	solid	6070	12.3	0.20
	gas	1.4	1.5	107
Manganese	solid	2640	9.0	0.34
	gas	3.2	0.6	19
Mercury	solid	0.86	0.72	84
	gas	58.3	4.3	7.4
Nickel	solid	3310	31.1	0.94
	gas	1.7	0.6	35
Selenium	solid	69.0	0.25	0.36
	gas	45.9	1.2	2.6
Vanadium	solid	3800	8.3	0.22
	gas	1.7	0.6	35

Table E.2
Comparison of Metal Amounts in the Sample and the Blank in One Run at the ESP Outlet
(May 4, 1993)

Metal	Phase	Sample quantity, µg	Blank quantity, µg	Blank as % of sample
Arsenic	solid	135	32.8	24
	gas	2.3	2.4	104
Barium	solid	111	101	91
	gas	2.0	0.6	30
Beryllium	solid	6	0.49	8.2
	gas	0.12	0.12	100
Cadmium	solid	9.2	5.3	58
	gas	2.0	0.4	20
Chromium	solid	127	35.5	28
	gas	2.6	0.6	23
Cobalt	solid	47	4.3	9.1
	gas	0.9	0.9	100
Lead	solid	175	12.3	7.0
	gas	1.5	1.5	100
Manganese	solid	538	9.0	1.7
	gas	4.5	0.6	13
Mercury	solid	3.8	0.72	19
	gas	32.1	4.3	13
Nickel	solid	91	31.1	34
	gas	0.6	0.6	100
Selenium	solid	27.5	0.25	0.91
	gas	1.4	1.2	86
Vanadium	solid	124	8.3	6.7
	gas	1.7	0.6	35

APPENDIX F

ANALYTICAL DATA ON INORGANIC SPECIES (TRACE METALS AND ANIONS)

Table F-1 (Page 1 of 3)
Metal and Anion Concentrations in Gas Streams
Concentrations in $\mu g/Nm^3$ (3% O_2, 1 atm, 273.15 K)

	State	Analysis	Run 1		Run 2		Run 3	
			Sol./gas	Total	Sol./gas	Total	Sol./gas	Total
ESP Inlet								
As	solid	GFAAS	1594		2239		3829	
	gas	GFAAS	<1	1595	<1	2239	0.09	3829
Ba	solid	ICP	3358		2787		5114	
	gas	ICP	1.36	3359	0.9	2788	0.03	5114
Be	solid	ICP	117		96.6		199	
	gas	ICP	<1	117	<1	96.6	0.01	199
Cd	solid	GFAAS	137		119		261	
	gas	GFAAS	0.98	138	0.56	120	0.03	261
Cr	solid	ICP	2419		2253		3378	
	gas	ICP	1.03	2420	1.1	2254	0.79	3379
Co	solid	ICP	806		691		1316	
	gas	ICP	<1	806	<1	691	0.04	1316
Pb	solid	ICP	5500		5156		10578	
	gas	ICP	<1	5500	2.4	5158	0.08	10578
Mn	solid	ICP	2389		2194		4209	
	gas	ICP	2.39	2391	--[a]	2194	--[a]	4209
Hg	solid	CVAAS	0.13		<1		<1	
	gas	CVAAS	48.9	49.0	41.6	42.1	25.3	25.8
Ni	solid	ICP	2977		2746		4674	
	gas	ICP	0.98	2978	0.82	2747	0.03	4674
Se	solid	GFAAS	62.5		3.82		6.05	
	gas	GFAAS	40.6	103	133	137	178	184
V	solid	ICP	3443		2861		5053	
	gas	ICP	0.98	3444	0.74	2862	0.03	5053

[a]Outlier (see page 3-17).

Table F-1 (Page 2 of 3)
Metal and Anion Concentrations in Gas Streams
Concentrations in $\mu g/Nm^3$ (3% O_2, 1 atm, 273.15 K)

			Run 1		Run 2		Run 3	
	State	Analysis	Sol./gas	Total	Sol./gas	Total	Sol./gas	Total
F^-	gas	SIE	960	–	3170	–	2260	–
Cl^-	gas	IC	23400	–	224000	–	31300	–
SO_4^{-2}	gas	IC	3650000	–	5170000	–	4720000	–
PO_4^{-3}	gas	IC	<1600	–	<1700	–	<1900	–
ESP Outlet								
As	solid	GFAAS	87.8		400		520	
	gas	GFAAS	<1	88	<1	400	1.9	522
Ba	solid	ICP	8.6		134		168	
	gas	ICP	1.2	9.8	1.3	135	1.1	169
Be	solid	ICP	4.7		6.9		5.8	
	gas	ICP	<1	5.2	<1	7.4	0.01	5.8
Cd	solid	GFAAS	3.3		7.1		4.1	
	gas	GFAAS	1.4	4.7	0.48	7.6	0.03	4.1
Cr	solid	ICP	78.8		179		191	
	gas	ICP	1.7	80.5	1.4	180	2.9	194
Co	solid	ICP	36.8		35.7		44.9	
	gas	ICP	<1	37.5	<1	36.2	0.07	45.0
Pb	solid	ICP	140		377		302	
	gas	ICP	<1	140	<1	377	0.12	302
Mn	solid	ICP	455		395		74.4	
	gas	ICP	3.3	458	2.5	3.97	–[a]	74.4
Hg	solid	CVAAS	2.7		2.3		<1	
	gas	CVAAS	239	26.6	1.7	4.0	<1	<1

[a]Outlier (see page 3-17).

Table F-1 (Page 3 of 3)
Metal and Anion Concentrations in Gas Streams
Concentrations in $\mu g/Nm^3$ (3% O_2, 1 atm, 273.15 K)

			Run 1		Run 2		Run 3	
	State	Analysis	Sol./gas	Total	Sol./gas	Total	Sol./gas	Total
Ni	solid	ICP	51.5		129		138	
	gas	ICP	<1	52.0	<1	129	1.2	139
Se	solid	GFAAS	23.4		69.8		61.7	
	gas	GFAAS	0.15	23.5	95.5	165	52.4	114
V	solid	ICP	99.6		239		334	
	gas	ICP	0.93	100.5	<1	239	0.04	334
F^-	gas	SIE	5990	--	5920	--	5440	--
Cl^-	gas	IC	336000	--	344000	--	354000	--
SO_4^{-2}	gas	IC	7210000	--	6990000	--	6810000	--
PO_4^{-3}	gas	IC	<1600	--	<1300	--	<1700	--

Table F.2
Analyses of Coal Samples for Trace Metals[a,b]
(Data in μg/g)

	U.Mo.			Galbraith			Triangle			SRI		
	May 4	May 5	May 6	May 4	May 5	May 6	May 4	May 5	May 6	May 4	May 5	May 6
As	11.2	13.0	12.5	8.7	11.8	13.8	9.17	12.3	9.33			
Ba	27	22	29	34.2	31.8	36.6	(73.7)	(454)	(46.2)	29.1	25.0	26.5
Be				0.85	<1.0	0.83	2.48	0.768	1.23			
Cd				0.49	<0.1	<0.49	2.20	<1.90	1.70	<1.0	1.19	1.29
Co	4.39	4.47	4.75	4.2	4.4	4.9	(75.1)	(12.6)	(28.7)	2.00	2.56	4.18
Cr	12.6	12.9	13.5	6.3	12.0	7.3	(265)	(10.0)	(20.2)	9.96	9.45	12.3
Hg	0.066	0.065	0.073	<0.10	<0.10	0.10	0.085	0.083	0.103			
Mn	38.2	36.2	37.4	38.3	23.8	41.6	(77.1)	29.6	42.4	11.5	24.4	29.0
Ni	12	21	18	11.3	14.2	9.5	(34.8)	12.7	17.1	4.90	8.59	19.0
Pb				25.1	27.6	30.3	(124)	19.5	36.6	15.3	28.6	25.8
Se	1.39	1.48	1.39	(<2.7)	(<6.0)	4.9	(<0.982)	(<0.949)	(<0.719)			
V	23	18	27	22.8	20.1	25.3	44.2	17.1	27.8	12.4		

[a]Brooks Rand		May 4	May 5	May 6
	As	15.6	9.28	11.2
	Hg	0.078	0.083	0.114
	Se	1.51	1.08	1.36

[b]Data in parentheses rejected as outliers.

Table F.3
Analyses of Slag Samples for Trace Metals[a]
(Data in μg/g)

	U. Mo.			Galbraith			Triangle			SRI		
	May 4	May 5	May 6	May 4	May 5	May 6	May 4	May 5	May 6	May 4	May 5	May 6
As	1.8	0.8	1.7	(113)	(58.4)	(90.6)	1.35	1.14	2.63			
Ba	371	312	320	386	254	367	326	311	(6970)	173	167	189
Be				8.2	4.4	7.7	6.98	6.88	(145)			
Cd				19.5	<0.1	<5.0	12.5	14.0	(392)	5.33	6.34	7.78
Co	31.9	33.2	32.9	44.0	26.6	43.5	(114)	(121)	(3570)	14.3	15.4	17.4
Cr	124	123	117	125.5	100	60	107	108	(2110)	58.0	58.0	69.0
Hg	<0.065	<0.065	<0.065	<0.10	<0.1	<0.10	0.064	0.215	0.104			
Mn	486	516	538	476.6	300	543	376	398	(9490)	208	214	271
Ni	55	107	68	101.4	64.4	91	79.9	77.4	(2770)	43.4	41.8	49.6
Pb				25.6	16.4	27	13.4	<2.99	(569)	87.4	32.2	43.6
Se	2.86	3.04	2.94	<2.0	NR	<2.0	<0.833	<0.998	<0.975			
V	172	166	151	203.5	103	186	155	140	(2950)	89.6	85.9	95.5

[a]Data in parentheses rejected as outliers.

Table F.4
Average Trace Metal Concentrations in the Slag[a]
(Data in μg/g)

	May 4	May 5	May 6
Arsenic	1.6 ± 0.3	1.0 ± 0.2	2.2 ± 0.7
Barium	361 ± 31	261 ± 68	292 ± 92
Beryllium	7.6 ± 0.9	5.6 ± 1.8	7.7[b]
Cadmium	12.4 ± 7.1	6.8 ± 7.0	7.8[b]
Chromium	119 ± 10	110 ± 12	82 ± 31
Cobalt	30.1 ± 14.9	25.1 ± 9.0	31.3 ± 13.1
Lead	19.5 ± 8.6	24.3 ± 11.2	35.3 ± 11.7
Manganese	387 ± 129	357 ± 130	451 ± 156
Mercury	<0.1	<0.1	<0.1
Nickel	69.9 ± 25.9	72.6 ± 27.2	69.5 ± 20.7
Selenium	2.86	3.04	2.94
Vanadium	155 ± 48	124 ± 36	144 ± 46

[a]Averages and standard deviations derived from data in Table F.3.
[b]Only one reported concentration for beryllium or cadmium on May 6 in the Appendix is consistent with the average result on the preceding sampling days. Hence, the single result without a standard deviation is presented.

Table F.5
Trace Metal Concentrations
in Water Streams
Associated with Bottom Ash Sluicing
(Data in mg/L)

	Make-up water	Discharge water
Arsenic	<0.033	<0.033
Barium	0.082	0.070
Beryllium	<0.004	<0.004
Cadmium	<0.013	<0.013
Chromium	<0.033	<0.033
Cobalt	<0.022	<0.022
Lead	0.053	<0.044
Manganese	0.173	0.107
Mercury	0.102	N/A
Nickel	<0.022	0.023
Selenium	<0.033	<0.033
Vanadium	<0.022	<0.022

Table F.6
Analyses of ESP Ash Samples for Trace Metals[a]
(Data in μg/g)

	U. Mo.			Galbraith			Triangle			SRI		
	May 4	May 5	May 6	May 4	May 5	May 6	May 4	May 5	May 6	May 4	May 5	May 6
As	323	339	323	259	338	242	355	368	339			
Ba	348	525	365	470	475	455	403	421	383			
Be				17.4	14.8	17.1	14.4	15.1	13.6			
Cd				4.9	4.0	2.7	18.4	19.4	18.3			
Co	71.7	70.5	69.8	90.2	71.8	87	(160)	(162)	(161)			
Cr	270	281	278	275.7	273	287	238	246	235			
Hg	0.269	0.180	0.584	(<0.10)	(<0.10)	(<0.10)	0.079	0.110	0.244			
Mn	325	325	288	330.5	254	329	256	257	254			
Ni	230	234	233	286.2	269	276	238	229	217			
Pb				625	466	588	559	591	581			
Se	18.2	16.8	20.7	7.5	2.3	6.8	76.8	19.4	16.0			
V	397	452	396	481	431	472	362	401	348			

[a]Data in parentheses rejected as outliers.

Table F.7
Average Trace Metal Concentrations
in ESP-Collected Ash[a]
(Data in μg/g)

	May 4	May 5	May 6
Arsenic	312 ± 49	348 ± 17	301 ± 52
Barium	407 ± 61	474 ± 52	401 ± 48
Beryllium	15.9 ± 2.1	15.0 ± 0.2	15.4 ± 2.5
Cadmium	18.4	19.4	18.3
Chromium	261 ± 20	267 ± 18	267 ± 28
Cobalt	81.0 ± 13.1	71.1 ± 0.9	78.4 ± 12.2
Lead	592 ± 47	528 ± 88	584 ± 5
Manganese	304 ± 42	279 ± 40	290 ± 38
Mercury	0.12 ± 0.13	0.11 ± 0.07	0.29 ± 0.27
Nickel	251 ± 30	244 ± 22	242 ± 30
Selenium	18.2	16.8	20.7
Vanadium	413 ± 61	428 ± 26	405 ± 62

[a]Averages and standard deviations derived from data in Table F.6.

Table F.8
Anion Concentrations in Solids
(Data in μg/g)

		May 4	May 5	May 6
Slag	Sulfate	500	400	<400
	Chloride	400	200	335
	Fluoride	600	100	<1000
	Phosphate	900	1000	1320
ESP ash	Sulfate	--	28600	28100
	Chloride	200	287	240
	Fluoride	300	<1000	<900
	Phosphate	2100	4765	4567
Fly ash[a]	Sulfate	73800	67700	52800
	Chloride	301	544	704
	Fluoride	<700	600	<500
	Phosphate	5120	5370	4460

[a]Fly ash collected at the inlet of the ESP.

Table F.9
Acid Gas Concentrations Equivalent to Anion Concentrations in Fly Ash at the ESP Inlet

Acid gas	Concn, ppmv		
	May 4	May 5	May 6
SO_2	42.9	47.8	35.5
HCl	0.5	1.0	1.3
HF	<3.3	2.14	<1.8
H_3PO_4	2.9	3.7	2.9

APPENDIX G

ANALYTICAL DATA ON ORGANIC SPECIES (ALDEHYDES, VOLATILE ORGANICS, DIOXINS, AND FURANS)

Table G.1
Observed Quantities of Aldehydes and Ketones[a]
(Amounts in micrograms)

Compound	May 4		May 5		May 6
	Blank	Sample	Blank	Sample	Sample
Formaldehyde	0.669	ND	0.633	ND	2.09
Acetaldehyde	1.04	0.786	1.15	ND	0.473
Acrolein	ND	ND	ND	ND	2.88
Acetone	5.42	ND	5.22	ND	0.342
Crotonaldehyde	ND	ND	ND	ND	ND
2-Butanone	0.452	ND	0.452	ND	3.48
Benzaldehyde	ND	ND	ND	ND	37.7
Pentanal	2.08	ND	1.41	ND	ND
m-Tolualdehyde	ND	ND	ND	ND	3.61
Hexanal	ND	ND	ND	ND	ND
Nm^3 (3%)		0.401		0.407	0.406

[a]ND = No signal; gas volume sampled, ca. 0.4 Nm^3.

Table G.2
Synopsis of Data on Benzene and Toluene

Date	Expt.	Sample volume, L[a]	Laboratory[b]	Quantity of analyte, ng			
				Benzene[d]		Toluene[d]	
				T[c]	T/C[c]	T[c]	T/C[c]
May 4	1	12.5	S	135	26	42	<5
	2	6.29	S	55	101	11	24
	3	3.04	S	84	30	24	16
	4	0 (FB)	S	<5	<5	<5	<5
May 5	5	6.76	S	86	26	31	10
	6	6.19	L	54	70	14	58
	8	5.92	L	85	50	24	10
	9	3.12	L	58	29	12	6
	11	12.1	L	118	77	25	10
	12	0 (FB)	L	<5	7	27	7
May 6	13	13.7	L	117	78	56	11
	14	9.03	S	58	40	30	12
	15	6.66	L	111	31	43	<5
	16	0 (FB)	L	6	17	<5	104
-	-	0 (TB)	L	5	<5	<5	<5

[a]For dry gas at 1 atm, 3% O_2, 273.15 K; FB=field blank, TB=trip blank.
[b]S=Southern Research, L=Lancaster.
[c]T=Tenax, T/C=Tenax/charcoal.
[d]Results by linear regression:
Benzene Amount = 28.6 + 12.6 volume; concentration = 12.6 $\mu g/Nm^3$
Toluene Amount = 35.2 ± 1.13 volume; concentration = 1.1 $\mu g/Nm^3$

Table G.3
Observed Quantities of Volatile Organic Compounds in VOST Samples
Analyzed at Southern Research Institute
(Quantities in nanograms)
(Blanks mean compounds not detected)

	Date: May 4 Gas volume: 12.5 L		Date: May 4 Gas volume: 6.29 L		Date: May 4 Gas volume: 3.04 L	
	T	TC	T	TC	T	TC
Bromomethane				43.8		
Acetone						
Carbon disulfide	30.1	50.9				
Benzene	135	26.5	55.2	101	83.5	30.3
Toluene	41.9		11.5	23.8	15.8	
m- & p-xylene				15.4		
	Date: May 4 Gas volume: 0 (Field blank)		**Date: May 5 Gas volume: 6.76 L**		**Date: May 6 Gas volume: 9.03 L**	
	T	TC	T	TC	T	TC
Acetone	(No compound detected)	(No compound detected)	126			
Carbon disulfide						43.1
Benzene			85.7	26.0	57.8	39.8
Toluene			31.1	10.2	30.3	12.4

Table G.4
Quantities of Volatile Organic Compounds in VOST Samples Analyzed at Lancaster Laboratories
(Quantities in nanograms)
(Blanks mean compounds not detected)

	Date: May 5 Gas volume: 12.1 L		Date: May 5 Gas volume: 0 (Field blank)		Date: May 6 Gas volume: 13.7 L	
	T	TC	T	TC	T	TC
Trichlorofluoromethane			7			5
Methylene chloride	6	11	10	5		6
cis-1,2-Dichloroethene						
Chloroform				13		
1,1,1-Trichloroethane						
1,2-Dichloroethane						
Benzene	118	77		27	117	78
Toluene	25	10	7	7	56	11
Ethyl Benzene					6	
m/p-Xylene	12				15	
Styrene	5					
1,1,2,2-Tetrachloroethane						

Table G.4 (Continued)
Quantities of Volatile Organic Compounds in VOST Samples Analyzed at Lancaster Laboratories
(Quantities in nanograms)
(Blanks mean compounds not detected)

	Date: May 5 Gas volume: 6.19 L		Date: May 5 Gas volume: 5.92 L		Date: May 5 Gas volume: 3.12 L	
	T	TC	T	TC	T	TC
Trichlorofluoromethane		205				
Methylene chloride		95	8	8	8	7
cis-1,2-Dichloroethene				7		
Chloroform		11		11		10
1,1,1-Trichloroethane		25				
1,2-Dichloroethane					6	
Benzene	54	70	85	50	58	29
Toluene	14	58	24	10	12	6
m/p-Xylene		7	11	6	13	
1,1,2,2-Tetrachloroethane		15			27	6

Table G.4 (Concluded)
Quantities of Volatile Organic Compounds in VOST Samples Analyzed at Lancaster Laboratories
(Quantities in nanograms)
(Blanks mean compounds not detected)

	Date: May 6 Gas volume: 6.66 L		Date: May 6 Gas volume: 0 (Field blank)		Date: May 4-6 Gas volume: 0 (Trip blank)	
	T	TC	T	TC	T	TC
Trichlorofluoromethane	9			76		
Methylene chloride	20	10	18	42		
Chloroform		9		5		
1,1,1-Trichloroethane				8		
Benzene	111	31	6	17	5	
Toluene	43		104			
m/p-Xylene	13					
Styrene	6					

Table G.5
Observed Quantities of Individual Dioxins and Furans[a]
(Amounts in picograms)

Compound	Trip blank	Field blank	Sample May 4	Sample May 5	Sample May 6
2,3,7,8-TCDD	ND	ND	5	ND	ND
2,3,7,8-TCDF	ND	ND	ND	ND	ND
1,2,3,7,8-PeCDD	ND	ND	ND	ND	ND
1,2,3,7,8-PeCDF	ND	ND	ND	ND	ND
2,3,4,7,8-PeCDF	ND	ND	ND	ND	5
1,2,3,4,7,8-HxCDD	ND	ND	ND	ND	ND
1,2,3,4,7,8-HxCDF	ND	ND	ND	ND	ND
1,2,3,6,7,8-HxCDD	ND	ND	ND	ND	ND
1,2,3,6,7,8-HxCDF	ND	ND	ND	ND	5
1,2,3,7,8,9-HxCDD	ND	ND	ND	ND	ND
1,2,3,7,8,9-HxCDF	ND	ND	ND	ND	ND
2,3,4,6,7,8-HxCDF	ND	ND	43	20	39
1,2,3,4,7,8,9-HpCDF	ND	ND	ND	ND	ND
1,2,3,4,6,7,8-HpCDD	ND	ND	ND	ND	10
1,2,3,4,6,7,8-HpCDF	ND	37	ND	ND	59
OCDD	ND	ND	ND	ND	ND
OCDF	ND	ND	ND	ND	ND

[a]Gas volume sampled, ca. 2 Nm^3.

Table G.6
Observed Quantities of Groups of Dioxins and Furans[a]
(Amounts in picograms)

Group	Trip blank	Field blank	Sample		
			May 4	May 5	May 6
TCDD	ND	ND	48.8	41.7	ND
TCDF	ND	ND	10.9	ND	25.5
PeCDD	ND	ND	14.9	34.4	13.3.
PeCDF	ND	ND	14.9	34.4	13.3
HxCDD	ND	ND	ND	ND	25.2
HxCDF	ND	ND	21.6	37.5	47.9
HpCDD	ND	ND	ND	ND	10.4
HpCDF	ND	68.7	ND	ND	109
OCDD	ND	ND	ND	ND	ND
OCDF	ND	ND	ND	ND	ND

[a]Gas volume sampled, ca. 2 Nm^3.

APPENDIX H

PLUME SIMULATION SAMPLING
(DESCRIPTION OF CONDENSIBLES AIR DILUTION TRAIN)

PLUME SIMULATION SAMPLING
(DESCRIPTION OF CONDENSIBLES AIR DILUTION TRAIN)

Sampling both without dilution (by Brooks Rand) and with dilution (by SRI) was performed at the stack. Sampling with dilution lowers both the flue gas concentrations and the gas temperature, thus simulating the two important changes that occur in the plume as stack gas emerges into the atmosphere. These processes will cause condensation of certain vaporous substances or, alternatively, may cause adsorption of these substances on pre-existing particulate matter. The net effect, whether there is homogeneous or heterogeneous condensation, is the transfer of vapors to particulate of small particle size.

Sulfuric acid vapor is the primary condensible substance in flue gas other than water vapor. If flue gas exits a stack at a typical temperature, 150 °C, it may contain up to 75 ppm of H_2SO_4 vapor; when the gas is cooled, however, the vapor will essentially disappear and the corresponding amount of acid will be found as a fine aerosol mist. There is also evidence that certain metal vapors will condense and be concentrated on small aerosol particles. This has been demonstrated for arsenic and selenium, for example, with a dilution sampler of the type to be described in the following paragraphs. It has not been demonstrated for mercury, on the other hand, which is a far more volatile metal. Certainly, the increase of metal concentrations on fine particulate matter in the plume from a stack is to be expected; there is compelling evidence that this phenomenon occurs before the gases reach the exit from the stack, while the flue gas is being cooled on passage from the boiler to the base of the stack. A continuation and amplification of the process in the plume must occur. The corresponding condensation of certain organic matter is to be expected also.

During the last 15 years, SRI developed several sampling trains incorporating dilution and cooling for purposes similar to those of present concern. The most recent dilution train was developed for widespread measurement of condensibles; it is called the CADT (Condensibles Air Dilution Train). It is illustrated in Figure H.4. It was designed and built for EPA under the scenario that in-stack total particulate matter (or PM_{10}) is a material separate from condensibles. For condensibles measurement with the CADT, process gas is conveyed to the dilution chamber through an in-stack filter, Method 5 probe, and heated sample flow-measuring orifice. Process gas is diluted in rapid mixing with filtered, cooled ambient air to obtain a final gas mixture near 20 °C. A residence time of 2 to 3 sec, sufficient for condensation, is provided prior to collection of condensed particulate matter on a quartz filter, 150 mm in diameter. Tests indicated that condensation on walls of the dilution chamber is low (<10%); nevertheless, the chamber walls are warmed to 27 °C to reduce gradients toward the walls that may add to diffusion. The criteria of practical operation and precise measurements, which are needed for formal emission measurement methodology, were of primary concern in design of the CADT. Although losses of particulate passing through the CADT have not

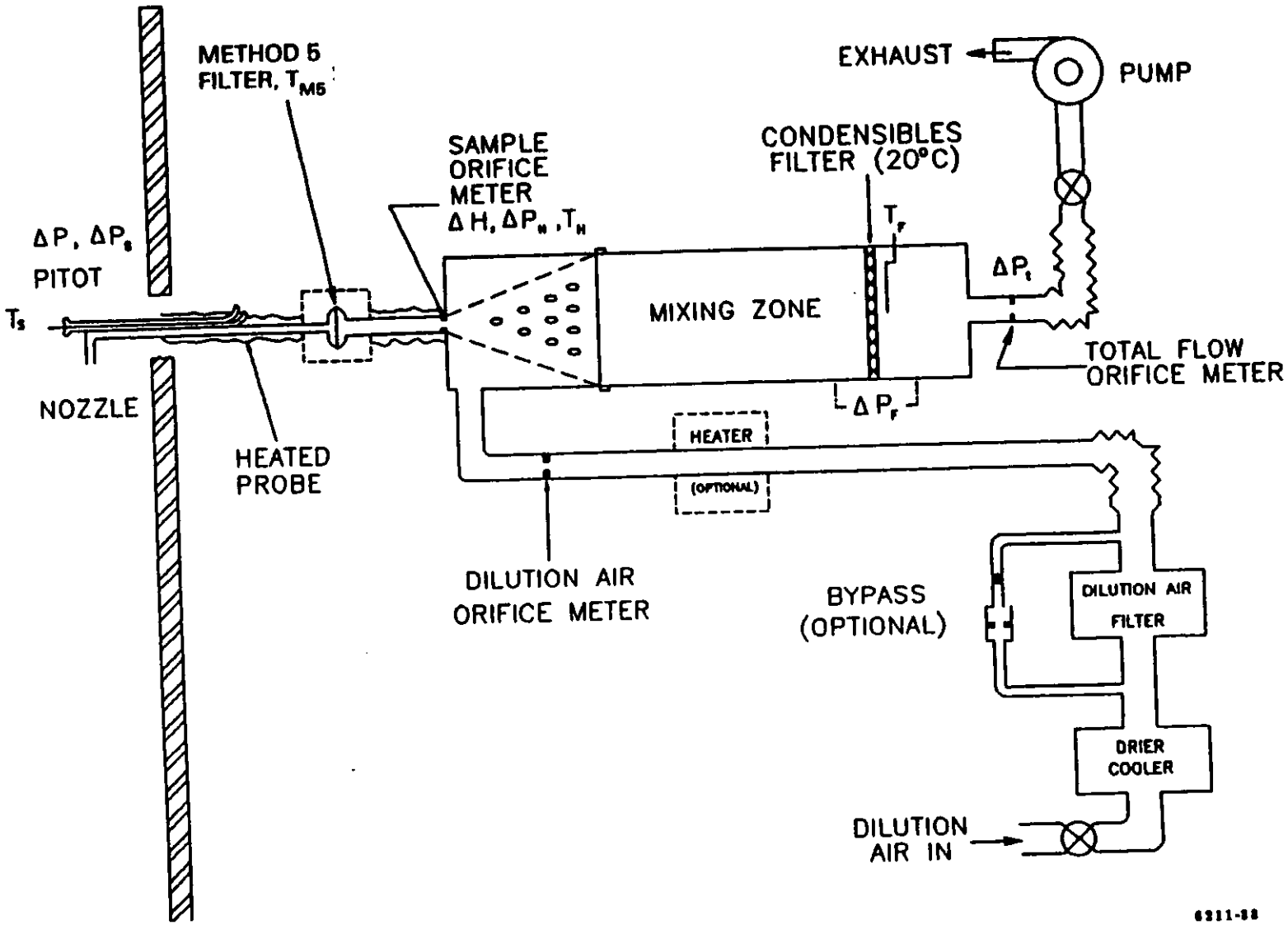

Figure H.1 Schematic of Condensibles Air Dilution Train.

been specifically measured, it is believed that particles smaller than 5 μm would reach the condensibles filter with high efficiency and that this size fraction is the more important. Details of CADT operation are given in the following paragraphs.

Description and Operation of the CADT

The condensible air dilution train is illustrated in Figure E.1. The portion of the sampling train from the nozzle up to and including the Method 5 filter is identical to the Method 5 train. The in-stack portion may be replaced by probes specified for Method 17 or the Constant Sampling Rate (CSR) approach for PM_{10}. Sample flow and dilution air flow are established by the pump at the exhaust end of the CADT and regulated with valves in the dilution air inlet and the exhaust branches. Sample gas is passed to the sample orifice meter through a heated glass tube. The sample orifice meter is located at the apex of the perforated diluter cone where dilution gas is injected to rapidly mix with the sample gas. The diluted sample then passes through the mixing zone to the filter for condensibles where condensed particulate matter is collected. Gas passing this filter then passes through the total flow orifice meter and flow control valves before being exhausted through the pump.

The sample orifice meter, diluter cone, the housing of the cone, and all internal surfaces downstream to the diluter exit are coated with Teflon. The sample orifice meter is fabricated from stainless steel, and all components of the diluter are fabricated from aluminum. The overall weight of the diluter cylinder is about 15 kg, its length is 85 cm, and the outside diameter, including flanges and insulation, is 23 cm.

The dilution air consists of ambient air conditioned by cooling in an ice bath condenser, passing through a column of silica gel, passing through a bed of activated charcoal, and being filtered through an absolute filter. The temperature of the dilution air must be controlled at less than 20 °C to obtain the desired temperature of the total diluted gas (sample gas and dilution air). Insulation of the dilution air conduit serves to prevent overheating of the dilution air during warm weather. A heater is included on the dilution air conduit to warm the dilution air in cold weather. The purpose of the bypass around the dilution air filter in the illustration is to permit passage of a small fraction of particles from the ambient air to pass into the diluter if needed as condensation nuclei.

Dilution Factor and Flow Rates.

While the dilution approach is attractive conceptually because it simulates a source/ambient interface more nearly than other approaches, its major procedural advantage is that sufficient dilution prevents condensation of large quantities of water vapor from the stack gas. For a specified sampling rate, the amount of dilution is limited by sizes and costs of the train components that are reasonable. The gas flow rate of the cyclone identified for PM_{10} measurements is limited to about 0.5 scfm to obtain a particle cut size at 10 μm, and limiting the sampling rate with a Method 5 train to less than about 0.5 scfm is reasonable. Pumps with a loaded capacity of 10 scfm (which is about 20 times the PM_{10} flow rate value) are practical for source sampling. These factors led to

selection of 20 for the maximum volume dilution factor. This dilution factor is high enough to avoid condensation of water for moisture contents up to 35%, higher than moisture contents of most sources including many with wet scrubbers. At Site 122 the selected target dilution factor was 10, giving sample and total diluted gas flow rates for the CADT of 0.5 and 5 scfm, respectively. This dilution factor was selected to maximize the detection limits for the analytes without severely compromising the effect of dilution cooling on condensation or causing problems from the condensation of moisture.

Dilution and Mixing Zone.

The geometry of the diluter cone is a 50% scale-up of one used extensively to extract flue gas for measurement of size distribution. The 82 dilution air jets are designed for high, small-scale turbulence and low net swirl to produce a flat velocity distribution at the cone exit. The length of the cone is 23 cm, and its exit diameter is 15.2 cm. The inside diameter of the mixing zone is 15.2 cm, and its length is 48.9 cm. The primary criterion for selecting these dimensions was to provide residence time in the range 1.5 to 2 sec, previously recommended in the literature survey performed at SRI, at a total diluted gas flow rate of 10 scfm.

Sample Orifice Meter (sample gas flow rate and volume).

The sample gas temperature from the probe up to and including the orifice disc of the sample orifice meter is maintained at 120 °C to prevent condensation of moisture in the sample gas. The orifice meter serves the same purpose as that used in Method 5, the monitoring of sample flow rate required to maintain isokinetic sampling. In addition, it serves the purpose of the dry gas meter in Method 5; the total sample gas volume is measured at this point, before dilution of the sample. Calibration of the orifice meter is performed in the same manner as in Method 5 (with a wet test meter installed upstream of the orifice meter and a leak check to verify that gas flow through the wet test meter and orifice meter is the same). Sample gas volume is measured in the CADT through digital electronic integration of the signal from a differential pressure transducer across the orifice.

APPENDIX I

ANALYTICAL DATA NOT USED IN CALCULATIONS: NAA DATA FOR A SUPPLEMENTAL LIST OF METALS

Table I.1
Supplemental Data from NAA at the
University of Missouri-Columbia

	Coal			Slag			ESP ash		
	5/4	5/5	5/6	5/4	5/5	5/6	5/4	5/5	5/6
Al	9700	10400	9700	108800	110500	110300	100400	102300	9810
Ca	3400	2900	3100	40500	41600	43800	21200	22300	22500
Ce	12.4	12.7	13.2	125	125	127	143	149	143
Cs	0.87	0.87	0.95	5.63	5.04	5.34	14.2	15.5	14.7
Dy	0.73	0.74	0.81	7.94	7.98	7.80	10.9	11.4	10.7
Eu	0.20	0.21	0.21	2.02	2.03	2.00	2.44	2.66	2.50
Fe	11600	12600	12600	112000	121000	119000	142000	146000	144000
Hf	0.61	0.63	0.64	5.68	5.85	5.90	7.04	7.19	6.91
K	2000	2000	1800	16700	14600	14600	23800	23700	21900
La	6.36	6.64	6.67	66.3	66.1	66.0	67.8	70.0	69.6
Lu	0.073	0.075	0.074	0.643	0.591	0.556	0.99	1.15	0.98
Mo	1.3	1.3	1.4	5.5	5.2	4.1	46.2	58.4	44.9
Na	400	400	400	2800	2600	2600	5500	5500	5300
Nd	4.67	10.6	5.88	57.0	56.2	54.1	55.1	56.1	54.9
Rb	12.4	12.2	12.8	97.9	98.0	100.2	186	190	187
Sb	0.56	0.57	0.58	0.99	0.57	0.67	18.7	22.2	18.4
Sm	1.02	1.06	1.05	10.2	10.3	10.3	12.2	12.5	12.1
Sr	53	48	39	397	421	346	655	731	794
Ta	0.15	0.14	0.16	1.12	1.09	1.07	1.96	1.98	1.97
Tb	0.12	0.12	0.08	0.84	0.80	0.84	1.15	1.34	1.09
Th	1.64	1.62	1.68	14.8	14.3	14.1	20.4	21.4	19.9
Ti	600	500	500	5000	5400	5100	7900	8300	7800
U	0.56	0.60	0.61	5.54	4.31	4.07	14.6	17.1	14.0
Yb	0.47	0.49	0.47	4.65	4.82	4.66	5.40	5.84	5.65
Zn	28	23	27	80	60	69	918	881	857
Zr	27	21	25	171	171	185	239	217	238

SUMMARY

This report discusses an investigation of the emissions of certain hazardous air pollutants at PISCES Site 122. This plant is a coal-burning electricity generating facility. The investigation was jointly sponsored by the owning utility and the Electric Power Research Institute (EPRI). The study was performed at Southern Research Institute (SRI) and administered by EPRI under RP9028-10 as part of EPRI's Field Chemical Emissions Monitoring (FCEM) Project. One of the main purposes of this Project is to measure at a variety of electric power stations the emissions of those hazardous substances or "air toxics" that are enumerated in the 1990 amendments to the Clean Air Act.

Distinguishing features of Site 122 are 1) the use of an Eastern bituminous coal as fuel, 2) the firing of the coal in a boiler of the cyclone type, 3) the control of emissions with a cold-side electrostatic precipitator (ESP), and 4) the absence of any mechanism for controlling the emission of the gaseous oxides of sulfur and nitrogen. The coal contains ash and sulfur at concentrations of approximately 10% and 2%, respectively. The cyclone furnace operates at a very high temperature and, as a consequence, produces an exceptionally high concentration of nitrogen oxides. The ESP has operated several decades; it does not provide the very high degree of removal of fly ash that larger ESPs of a later vintage provide. Nevertheless, the ESP is able to control particulate emissions to an acceptable level, which is due in part to the fact that the ash concentration being controlled is moderated by the cyclone boiler. Cyclone boilers typically discharge a large fraction of the ash in the coal as bottom ash and thus emit a correspondingly small fraction of the ash as fly ash.

The classes of emissions investigated at Site 122 were as follows:

- Trace metals that occur as impurities in the coal (12 metals: arsenic, barium, beryllium, cadmium, chromium, cobalt, lead, manganese, mercury, nickel, selenium, and vanadium).

- Acid gases that are produced from nonmetal impurities in the coal (HF, HCl, SO_2, and H_3PO_4).

- Certain organic compounds that may be present as residues from the coal, which are not completely burned or which may be produced by processes that occur after the combustion gas leaves the boiler.

— Aldehydes.

— So-called "volatile" organic compounds, which include benzene, toluene, and other aromatic hydrocarbons as substances of particular interest. (Classification of these compounds stems from a difference in the method of collection. Some aldehydes are just as volatile as these compounds.)

— Perchlorinated dibenzodioxins and dibenzofurans, which have low volatilities but high toxicities when they contain chlorine substituents simultaneously at the 2,3,7,8 structural positions.

Emissions of the above substances may very well be related to the characteristics enumerated for Site 122. The high boiler temperature can vaporize trace elements that otherwise might not be vaporized; consequently, the distribution of these elements between the vapor and particulate states or between particles of different sizes may be different from that resulting from wall or tangential firing. The oxidation of organic compounds normally found in the coal may be made more complete and their emissions reduced. On the other hand, the high concentration of nitrogen oxides may affect the state of the organic compounds that are present. The control of emissions in the ESP is likely to involve only substances incorporated somehow in the particulate state; thus, the degree of control of toxic substances in solids will be governed approximately by the efficiency of the ESP for controlling particulate matter generally.

Gaseous emissions were collected at three locations for analysis: the inlet to one side of the twin ESP units, the outlet from the same side of the ESP, and the stack. The trace metals and acid gases were sampled before and after the ESP; mercury additionally was sampled at the stack. The three classes of organics were sampled only at the outlet of the ESP. Certain process solids were also sampled for analysis; these were the coal, bottom ash (slag), and fly ash collected in the ESP. One task of the project was to attempt material balances for the metals and nonmetals — that is, to show that the discharged material in the plant accounts for the entering material. Constructing material balances is a very practical way of ensuring data quality as well as visualizing the proportions of inlet and outlet streams in the plant.

Sampling and analysis were conducted in the main according to established methodology, principally with origins at the U.S. Environmental Protection Agency. Sampling and analysis of mercury in the stack were the most innovative techniques employed. SRI sampled mercury vapor from the stack with a device simulating the dilution and cooling of flue gas in the plume; meanwhile, another research organization under a separate contractual arrangement sampled mercury in the stack directly (without dilution) and also in the plume from a sampling platform in a helicopter. Analysis permitted the relative amounts of mercury as vapor in the divalent and element states to be reported.

The trace metals are discharged largely in three streams: 1) the bottom ash from the boiler, 2) the fly ash collected in the ESP, and 3) the uncollected ash and the vapors that enter the stack and then the atmosphere. On the basis of total mass, the bottom ash represents about 75% of the ash in the coal; it is discharged in an aqueous slurry that is pumped to an ash pond. The fly ash caught in the ESP, plus the ash that remained entrained in the flue gas in the stack, accounts for most of the remaining ash in the coal, or about 25% of the total. Between the bottom ash, on one hand, and fly ash and flue gas, on the other hand, there is significant partitioning of trace metals on the basis of volatility. The more volatile metals are present at lower concentrations in the bottom ash and higher concentrations in the fly ash. One example is arsenic, which is found at a negligible concentration in the bottom ash but is found at a high concentration in the fly ash.

Two trace metals were controlled either not at all or only to a limited degree because of their occurrence in the vapor state. One of these metals was mercury; the other was selenium. From the aspect of direct comparison of total metal concentrations at the ESP inlet and outlet, the remaining trace metals seemed to be controlled by electrostatic precipitation to the same degree approximately as the total ash.

Recovery of the nonmetallic elements in the form of acid gases at the ESP inlet was poor. Recovery of fluorine, chlorine, and sulfur, but not phosphorus, at the ESP outlet, on the other hand, was excellent. The conclusion (as expected) is that the two halogens and sulfur are emitted to the stack as acid gases, whereas the phosphorus is captured by the ash in the form of phosphate.

Material balance calculations indicate, as indirectly stated above, that the data on nonmetals in the coal and in the flue gas entering the stack were in satisfactory balance. Insofar as the trace metals are concerned, a reasonable balance is shown between the coal on one hand and the combination of bottom ash, ESP-collected ash, and ESP outlet flue gas on the other hand. The balance based on coal versus the combination of bottom ash and ESP inlet flue gas, on the other hand, is quite poor; the poor balance here is the basis for the above assertion that most of the ESP inlet concentrations of trace metals are in error (they are too high). Unfortunately, no reason for the consistently erroneous data, with positive bias, can be offered.

Aldehydes were not systematically detected at the ESP outlet; thus, their concentrations are reported as less that 1.0 $\mu g/Nm^3$ (less than about 1 part per billion by weight). Benzene and toluene appeared to occur at this location at concentrations of 12 and 3 $\mu g/Nm^3$, respectively. The dioxins and furans were detected at levels that cannot be reliably quantified; as far as those isomers containing the critical 2,3,7,8-tetrachloro substitution is concerned, the concentrations are reported as 0.03 $\mu g/Nm^3$ or less. (Reference conditions for expressing gas concentrations are temperature, 0 °C; pressure, 1 atm; and O_2 concentration, 3%.)