August 2014

Emissions Estimation Protocol for Petroleum Refineries

Draft Version 3

Submitted to:

Office of Air Quality Planning and Standards
U.S. Environmental Protection Agency
Research Triangle Park, NC 27711

Submitted by:

RTI International
3040 Cornwallis Road
Research Triangle Park, NC 27709-2194

[This page intentionally left blank.]

Table of Contents

1. Introduction 1-1
   1.1 Completeness 1-1
   1.2 Data Quality 1-10
   1.3 Calculations and Significant Digits 1-10

2. Equipment Leaks 2-1
   2.1 Methodology Rank 1 for Equipment Leaks 2-2
   2.2 Methodology Rank 2 for Equipment Leaks 2-3
      2.2.1 Speciating Equipment Leak Emissions 2-5
      2.2.2 Calculating Hourly and Annual Equipment Leak Emissions 2-7
   2.3 Methodology Rank 3 for Equipment Leaks 2-10
      2.3.1 Speciating Equipment Leak Emissions 2-12
      2.3.2 Calculating Hourly and Annual Equipment Leak Emissions 2-12
   2.4 Methodology Ranks 4 and 5 for Equipment Leaks 2-13
      2.4.1 Speciating Equipment Leak Emissions 2-14
      2.4.2 Calculating Hourly and Annual Equipment Leak Emissions 2-17

3. Storage Tanks 3-1
   3.1 Methodology Rank 1 for Storage Tanks 3-1
   3.2 Methodology Rank 2 for Storage Tanks 3-2
   3.3 Methodology Rank 3 for Storage Tanks 3-4

4. Stationary Combustion Sources 4-1
   4.1 Methodology Rank 1 for Stationary Combustion Sources 4-2
   4.2 Methodology Rank 2 for Stationary Combustion Sources 4-5
   4.3 Methodology Rank 3A for Stationary Combustion Sources 4-9
   4.4 Methodology Rank 3B for Stationary Combustion Sources 4-10
   4.5 Methodology Rank 4 for Stationary Combustion Sources 4-11
      4.5.1 Default Emission Factors for Process Heaters 4-12
      4.5.2 Default Emission Factor for Internal Combustion Engines 4-18
      4.5.3 Default Emission Factors for Combustion Turbines 4-18

5. Process Vents 5-1
   5.1 Catalytic Cracking Units 5-1
      5.1.1 Methodology Ranks 1 and 2 for Catalytic Cracking Units 5-2
      5.1.2 Methodology Ranks 3 and 4 for Catalytic Cracking Units 5-2
      5.1.3 Methodology Rank 5A for CCU Metal HAP Emissions Estimates 5-7
      5.1.4 Methodology Rank 5B for Catalytic Cracking Units 5-10
   5.2 Fluid Coking Units 5-11
      5.2.1 Methodology Ranks 1 and 2 for Fluid Coking Units 5-12
      5.2.2 Methodology Ranks 3 and 4 for Fluid Coking Units 5-12
      5.2.3 Methodology Rank 5 for Fluid Coking Units 5-12
   5.3 Delayed Coking Units 5-12
      5.3.1 Methodology Ranks 1 and 2 for Delayed Coking Units 5-14
      5.3.2 Methodology Rank 3 for Delayed Coking Units 5-14
      5.3.3 Methodology Rank 4 for Delayed Coking Units 5-16
      5.3.4 Methodology Rank 5 for Delayed Coking Units 5-17
   5.4 Catalytic Reforming Units 5-17
      5.4.1 Emissions Estimation Methodology for Catalytic Reforming Units 5-18
   5.5 Sulfur Recovery Plants 5-19

5.5.1 Methodology Ranks 1 and 2 for Sulfur Recovery Plants 5-20
5.5.2 Methodology Ranks 3 and 4 for Sulfur Recovery Plants 5-20
5.5.3 Methodology Rank 5 for Sulfur Recovery Plants 5-21
5.6 Other Miscellaneous Process Vents 5-21
5.6.1 Hydrogen Plant Vents 5-22
5.6.2 Asphalt Plant Vents 5-22
5.6.3 Coke Calcining 5-24
5.6.4 Blowdown Systems 5-27
5.6.5 Vacuum Producing Systems 5-27

6. Flares 6-1
6.1 Methodology Rank 1 for Flares 6-2
6.2 Methodology Rank 2 for Flares 6-3
6.3 Methodology Rank 3 for Flares 6-4
6.4 Methodology Rank 4 for Flares 6-6
6.5 Methodology Ranks 5 and 6 for Flares 6-7

7. Wastewater Collection and Treatment Systems 7-1
7.1 Methodology Rank 1 for Wastewater Treatment Units 7-2
7.2 Methodology Rank 2 for Wastewater Treatment Units 7-2
7.2.1 Wastewater Collection Systems 7-3
7.2.2 Primary Weirs 7-5
7.2.3 Oil-Water Separators 7-5
7.2.4 Dissolved Air Flotation Units 7-6
7.2.5 Equalization Tanks 7-6
7.2.6 Biological Treatment Units 7-6
7.2.7 Polishing Ponds 7-8
7.2.8 Site-Specific Factors 7-8
7.2.9 Model Validation 7-9
7.3 Methodology Rank 3 for Uncovered Units 7-9
7.3.1 Engineering Estimates Based on Wastewater Treatment Plant Load 7-9
7.3.2 Engineering Estimates Based on Process Capacities 7-9

8. Cooling Towers 8-1
8.1 Methodology Ranks 1 and 2 for Cooling Towers 8-2
8.2 Methodology Rank 3 for Cooling Towers 8-8
8.3 Methodology Rank 4 for Cooling Towers 8-10
8.4 Methodology Rank 5 for Cooling Towers 8-11
8.4.1 VOC and Volatile Organic HAP 8-12
8.4.2 Particulate Matter Emissions 8-13
8.4.3 Non-volatile Organic HAP Emissions 8-16
8.4.4 Chlorine Emissions 8-16

9. Loading Operations 9-1
9.1 Data Available on Product Composition and Properties 9-2
9.2 Methodology Rank 1 for Loading Operations 9-2
9.3 Methodology Ranks 2 and 3 for Loading operations 9-3
9.4 Methodology Rank 4 for Loading operations 9-4
9.4.1 AP-42 Emission Factors for “Product” or “Total Hydrocarbon” Emissions 9-5
9.4.2 Estimate Uncontrolled Emissions and Speciate 9-6
9.4.3 Capture Efficiency 9-6
9.4.4 Overall Control Efficiency 9-7

10. Fugitive Dust Sources 10-1

11. Startup and Shutdown 11-1
    11.1 Gaseous Process Vessel Depressurization and Purging 11-1
    11.2 Liquid Process Vessel Depressurization and Purging 11-2

12. Malfunctions/Upsets 12-1
    12.1 Control Device Malfunctions 12-2
    12.2 Vessel Overpressurization 12-3
    12.3 Spills 12-6

13. References 13-1

Appendix A Average Stream Compositions A-1

Appendix B Wastewater Treatment System Equations B-2

Appendix C Primer for TANKS Model Users C-1

Appendix D Emission Factors from Air Toxic Emission Factors for Combustion Sources Using Petroleum Based Fuels – Final Report, Volume 2 – Development of Emission Factors Using CARB Approach D-1

List of Figures

Figure 2-1. Illustration of alternative methods to determine equipment leak emissions from routine monitoring data. 2-8
Figure 7-1. Typical refinery wastewater treatment system. 7-1
Figure 7-2. Typical refinery wastewater collection system process drainage areas. 7-4
Figure 7-3. Simplified drawing of a constituent mass balance in a biological treatment unit. 7-7

List of Tables

Table 1-1. Summary of Pollutants and Emission Sources Inclusion in a Petroleum Refinery's Emission Inventory 1-3
Table 2-1. Summary of Equipment Leak Emission Estimates 2-2
Table 2-2. Equipment Leak Rate for Petroleum and SOCMI Equipment Components[a] 2-4
Table 2-3. Screening Ranges Emission Factors[a] 2-11
Table 2-4. Median Equipment Leak Component Counts for Small Model Processes[a] 2-15
Table 2-5. Median Equipment Leak Component Counts for Large Model Processes[a] 2-16
Table 2-6. Refinery and SOCMI Average Component Emission Factors[a] 2-17
Table 2-7. Concentration of HAP in Refinery Process Unit Streamsa 2-18
Table 3-1. Summary of Typical Hierarchy of Storage Tank Emission Estimates 3-1
Table 3-2. Default Control Efficiencies for Different VOC Control Devices 3-4
Table 3-3. Default Emissions Factors for Petroleum Refinery Storage Tanks 3-5
Table 4-1. Summary of Typical Hierarchy of Stationary Combustion Source Emission Estimates 4-2
Table 4-2. Molar Exhaust Volumes and Molar Heat Content of Refinery Fuel Gas Constituents 4-5
Table 4-3. Summary of Emission Factors for Boilers and Process Heaters Firing Various Fuels 4-13
Table 4-4. Summary of Emission Factors for Internal Combustion Engines Firing Various Fuels[a] 4-19
Table 4-5. Summary of Emission Factors for Combustion Turbines Firing Various Fuels[a] 4-23
Table 5-1. Summary of Typical Hierarchy of Process Vent Emissions Estimates 5-1
Table 5-2. Default Size Distribution for Filterable PM from CCU 5-6
Table 5-3. Default Ratio of Metal HAP Composition of CCU Finesa 5-8
Table 5-4. Organic HAP Emissions Factors for CCU Catalyst Regenerator Vent 5-10
Table 5-5. Emissions Factors for Delayed Coking Unit Decoking Operations 5-16
Table 5-6. Emissions Factors for CRU Catalyst Regeneration Vent 5-19
Table 5-7. Emissions Factors for Sulfur Recovery Plants 5-21
Table 5-8. Emission Factors for Asphalt Blowing (U.S. EPA, 1995a) 5-23
Table 5-9. Asphalt Blowing – Nonmethane Volatile Organic Compounds Speciationa 5-23
Table 5-10. Summary of Emissions Factors for Controlled Asphalt Blowing 5-24
Table 5-11. Summary of Emissions Factors for Controlled Coke Calcining 5-25
Table 5-12. Default Emissions Factors for Blowdown Systems 5-27
Table 5-13. Default Emissions Factor for Vacuum Producing Systems 5-28
Table 6-1. Summary of Flare Emissions Estimate Methodologies 6-2
Table 6-2. Flare Energy Consumption-Based Emission Factorsa 6-5
Table 6-3. Emission Factors for Soot from Flares 6-5
Table 6-4. Flare General Emission Factorsa 6-8
Table 7-1. Summary of Wastewater Treatment Emission Estimates 7-2
Table 7-2. Critical Inputs and Chemical Properties Specific to Wastewater Collection System PDA Air Emission Calculations 7-5
Table 7-3. Critical Inputs, Variables, and Chemical Properties Specific to Primary Weir Air Emission Calculations 7-5

Table 7-4. Critical Inputs, Variables, and Chemical Properties Specific to Oil-Water Separators Air Emission Calculations 7-5
Table 7-5. Critical Inputs, Variables, and Chemical Properties Specific to DAF Air Emission Calculations 7-6
Table 7-6. Critical Inputs, Variables, and Chemical Properties Specific to Equalization Tank Air Emission Calculations....7-6
Table 7-7. Critical Inputs, Variables, and Chemical Properties Specific to Biological Treatment Unit Air Emission Calculations 7-8
Table 7-8. Model Process Unit Characteristics for Petroleum Refinery Wastewater[a]....7-10
Table 7-9. Refinery Wastewater Contaminant Concentrations as a Ratio to Benzene 7-10
Table 7-10. Default Mass Emission Factors for Refinery Wastewater Collection and Treatment Systems 7-11
Table 8-1. Summary of Cooling Tower Emissions Estimation Methodologies 8-2
Table 8-2. Data Requirements for VOC or Speciated VOC Emissions, Methodology Ranks 1 and 2 8-3
Table 8-3. Data Requirements for Speciated Compound Emissions, Methodology Rank 3 8-9
Table 8-4. Data Requirements for Speciated Compound Emissions, Methodology Rank 4 8-11
Table 8-5. Methodology Rank 5 Default Emission Factors....8-11
Table 8-6. Data Requirements for VOC or Speciated VOC Emissions, Methodology Rank 5....8-12
Table 9-1. Summary of Loading operations Emission Estimates 9-2
Table 9-2. Data Requirements for VOC or Speciated Emissions, Methodology Rank 1 or 2....9-3
Table 9-3. Saturation Factors[a]....9-5
Table 9-4. VOC Emission Factors for Marine Vessel Loading of Gasoline at Marine Terminals[a]....9-6
Table 9-5. Capture Efficiencies for Vapor Collection Systems[a]....9-7
Table 9-6. Sample Calculation Methodology Rank 4—Summary of Emissions (When Property Data Are Not Available)....9-10
Table 10-1. Default Values for Fugitive Dust Emission Estimates 10-1
Table 12-1. Control Device Efficiency and Multiplier Factors for Control Device Malfunctions....12-2

[This page intentionally left blank.]

List of Acronyms and Abbreviations

µg/L	micrograms per liter
acfm	actual cubic feet per minute
API	American Petroleum Institute
atm	atmosphere
atm/in. of Hg	atmospheres per inch of mercury
bbl/cd	barrels per calendar day
bbl/sd	barrels per stream day
bbl/hr	barrels per hour
BID	Background Information Document
BOX test	Batch test with oxygen addition (a type of aerated reactor test specified in Appendix C to 40 CFR Part 63)
Btu/mol	British thermal units per mole
Btu/scf	British thermal units per standard cubic feet
BWON	Benzene Waste Operations NESHAP
CARB	California Air Resources Board
CCU	catalytic cracking unit
CEMS	continuous emission monitoring system
CERMS	continuous emission rate monitoring system
CFR	Code of Federal Regulations
CH_4	methane
Cl_2	chlorine
CO	carbon monoxide
COS	carbonyl sulfide
Cr^{+6}	hexavalent chromium
CRU	catalytic reforming unit
CS_2	carbon disulfide
DAF	dissolved air flotation
DIAL	Differential Absorption Light Detection and Ranging
DNF	dissolved nitrogen flotation
dscf/MMBtu	dry standard cubic feet per million British thermal unit
dscf/mol	dry standard cubic feet per mole
dscfm	dry standard cubic feet per minute
E-cat	equilibrium catalyst
EPA	U.S. Environmental Protection Agency
ESP	electrostatic precipitator
FCCU	fluid catalytic cracking unit
FCU	fluid coking unit
FID	flame ionization detection
g/hr	grams per hour

g/mol	grams per mole
gal/bbl	gallons of wastewater per barrel of capacity at a given process unit
GC	gas chromatograph
GC/MS	gas chromatography/mass spectrometry
GHG	greenhouse gases
H_2S	hydrogen sulfide
HAP	hazardous air pollutants
HCl	hydrogen chloride
hepta-CDD	heptachloro-dibenzo-p-dioxin
Hg	Mercury
hr/yr	hours per year
IAF	induced air flotation
ICR	information collection request
in.	Inches
kg TOC/hr	kilograms of TOC per hour
kg/hr	kilograms per hour
kg/hr/source	kilograms per hour per source
kg/kg-mol	kilogram per kilogram mole
kg/yr	kilograms per year
kPa	kilopascals
lb/dscf	pounds per dry standard cubic foot
lb/lb-mol	pounds per pound mole
lb/lton	pounds per long ton
lb/Mgal	pounds per thousand gallons
lb/MMbbl	pounds per million barrels
lb/MMBtu	pounds per million British thermal unit
lb/MMcf	pounds per million cubic feet
lb/ton	pounds per ton
lb/ton coke	pounds per ton of petroleum coke
LDAR	leak detection and repair
LIDAR	Light Detection and Ranging
m^3/day	cubic meters per day
m^3/min	cubic meters per minute
MACT	Maximum Achievable Control Technology
mg/kg	milligrams per kilogram
min/hr	minutes per hour
mL/min	milliliters per minute
mL-atm/mol-K	milliliters-atmospheres per mole-Kelvin
MMBtu/scf	million British thermal units per standard cubic foot
MW	molecular weight
Ni	Nickel

NMOC	nonmethane organic compounds
NMVOC	nonmethane volatile organic compounds
NO	nitric oxide
NO_2	nitrogen dioxide
NO_x	nitrogen oxides
NSPS	new source performance standards
O_2	Oxygen
OCDD	octachloro-dibenzo-p-dioxin
OCDF	octachloro-dibenzo-furan
OVA	organic vapor analyzer
PAH	polycyclic aromatic hydrocarbons
PCB	polychlorinated biphenyls
PM	particulate matter
PM_{10}	PM emissions that are 10 µm in diameter or less
PM_{10}-FIL	filterable (or front-half catch) portion of the PM emissions that are 10 µm in diameter or less
PM_{10}-PRI	"primary" PM emissions that are 10 µm in diameter or less
$PM_{2.5}$	PM emissions that are 2.5 µm in diameter or less
$PM_{2.5}$-FIL	filterable (or front-half catch) portion of the PM emissions that are 2.5 µm in diameter or less
$PM_{2.5}$-PRI	"primary" PM emissions that are 2.5 µm in diameter or less
PM-CON	condensable PM (or back-half catch)
POM	polycyclic organic matter
POTW	publicly owned treatment works
ppmv	parts per million by volume
ppmw	parts per million by weight
psi	pounds per square inch
psia	pounds per square inch absolute
psig	pounds per square inch gauge
QA	quality assurance
QC	quality control
scf/kg-mol	standard cubic feet per kilogram mole
scf/lb-mol	standard cubic feet per pound mole
SCR	selective catalytic reduction
SNCR	selective non-catalytic reduction
SO_2	sulfur dioxide
SRU	sulfur recovery unit
SSM	startup, shutdown, or malfunction
SV	screening value
TCCU	thermal catalytic cracking unit
TCDD	tetrachlorodibenzo-p-dioxin

TDS	total dissolved solids
TEQ	toxic equivalents
THC	total hydrocarbons
TOC	total organic compounds
tons/hr	tons per hour
tons/kg	tons per kilogram
tons/yr	tons per year
VOC	volatile organic compounds
vol%	volume percent
WebFIRE	Internet version of the Factor Information Retrieval (FIRE) data system
WF	weight fraction
WSPA	Western States Petroleum Association
wt%	weight percent
°C	degrees Celsius
°F	degrees Fahrenheit
°R	degrees Rankine

1. Introduction

This Refinery Emissions Protocol document is intended to provide guidance and instructions to petroleum refinery owners and operators and to federal, state, and local agencies for the purpose of improving emission inventories for the petroleum refining industry. This document presents a hierarchy of emission measurement or estimation methods for various petroleum refinery emission sources and provides a listing of pollutants for which emissions are anticipated for each source type.

For each emission source, the various emission measurement or estimation methods specific to that source are ranked in order of preference, with "Methodology Rank 1" being the preferred method, followed by "Methodology Rank 2," and so on. Refinery owners and operators and other inventory developers are requested to use the highest ranked method (with Methodology Rank 1 being the highest) ***for which data are available***. Methodology Ranks 1 or 2 generally rely on continuous emission measurements. When continuous measurement data are not available, engineering calculations or site-specific emission factors (Methodology Ranks 3 and 4) are specified; these methods generally need periodic, site-specific measurements. When site-specific measurement or test data are not available, default emission factors (Methodology Rank 5) are provided.

In the development of this Refinery Emissions Protocol document, U.S. Environmental Protection Agency (EPA) reviewed available source test data to verify or refine existing emission factors and develop new emission factors for sources that currently do not have default emission factors. EPA also provided guidance on characterizing and quantifying emissions associated with start-up, shut-down, and malfunction events. The "peer review draft version" (Version 1) of the Refinery Emissions Protocol document was posted on the EPA Web site (http://www.epa.gov/ttn/chief/efpac/esttools.html) on January 7, 2010, for initial public comment. Public comments were received from three different commenters. A special version of this Refinery Emissions Protocol document was then developed specific to the EPA's 2011 information collection request (ICR) for the petroleum refining industry (Version 2). This "version" (Version 3) of the Refinery Emissions Protocol document provides updates to certain emissions factors and methodologies developed using the additional test data collected as part of the 2011 ICR. While efforts have been made to coordinate the revisions of this Refinery Emissions Protocol document with the updates to the emissions factors in AP-42 (U.S. EPA, 1995a) and WebFIRE (the internet version of the Factor Information Retrieval (FIRE) data system), this Refinery Emissions Protocol document may include additional methodologies and emissions factors that are not included in AP-42, particularly for hazardous air pollutants (HAP). The EPA website (http://www.epa.gov/ttn/chief/efpac/esttools.html) should be checked prior to preparing an emissions inventory to ensure the most recent Refinery Emissions Protocol document is used.

1.1 Completeness

Emission estimates should be provided for each emission source at the refinery, including ancillary sources and non-refinery process units. While this Refinery Emissions Protocol document attempts to identify and provide methodologies for each emission source at a typical petroleum refinery, there may be certain sources located at the refinery that are not specifically addressed within the Refinery Emissions Protocol document. Additionally, there are sources included in this Refinery Emissions Protocol document for which no emission data are available to provide default (Methodology Rank 5) methods. It is the EPA's policy that emission estimates should be provided for every emissions source known to be present at a facility, even when emissions factors are not specifically included in AP-42 or this Refinery Emissions Protocol document (U.S. EPA, 1995a).

Similarly, emission estimates should be provided for each pollutant (except for greenhouse gases [GHGs], which are required to be reported under the *Mandatory Greenhouse Gas Emissions Reporting Rule* [Final Rule, 74 FR 56260]) emitted from a given emission source. **Table 1-1** provides a listing of the pollutants

expected to be emitted by various sources described in this protocol document. Filled circles indicate compound/emission source pairings for which emissions are expected to occur and for which emissions estimates should be developed. Hollow circles indicate pairings for which data may be reported (if the chemical is present or if data are available to speciate to that extent), but the inventory can be deemed complete without these estimates. In general, overall VOC emission measurement methods via EPA Methods 25, 25A-E, or 305 are preferred for reporting VOC emissions. Speciated VOC emissions should also be reported when that data are available; however, speciation of VOC emissions is not required. While emission estimates are desirable for every compound/emission source pairing where there is a filled circle in **Table 1-1**, nothing in this Refinery Emissions Protocol document should be construed to require additional sampling or analyses in order to provide these emissions estimates. Rather available data, supplemented with engineering analyses (following the guidance provided in this Protocol, where applicable), may be used to provide the desired speciation.

Some criteria pollutants, such as PM_{10} or $PM_{2.5}$ have special reporting nomenclatures to indicate the fraction of the particulate matter (PM) emissions that are filterable or condensable (see PM Emission Inventory Nomenclature text box). Other criteria pollutants, such as nitrogen dioxide (NO_2), are often determined or regulated as a combination of chemicals. For example, nitrogen oxides (NO_x), is the sum of NO_2 and nitric oxide (NO) emissions. The inclusion of these additional nomenclatures or groupings in **Table 1-1** is not intended to suggest that these compounds are criteria pollutants, but that these "pollutants" should be included in the refinery emission inventory.

PM Emission Inventory Nomenclature

PM emissions inventories have their own nomenclature and structure. A complete PM emissions inventory includes the following components:

- PM_{10}-PRI: "Primary" PM emissions that are 10 µm in diameter or less. PM_{10}-PRI = PM_{10}-FIL + PM-CON.
- PM_{10}-FIL: Filterable (or front-half catch) portion of the PM emissions that are 10 µm in diameter or less.
- PM-CON: Condensable PM (or back-half catch). All condensable PM is assumed to be less than 2.5 microns (µm) in diameter ($PM_{2.5}$).
- $PM_{2.5}$-PRI: "Primary" PM emissions that are 2.5 µm in diameter or less. $PM_{2.5}$-PRI = PM_{25}-FIL + PM-CON.
- $PM_{2.5}$-FIL: Filterable (or front-half catch) portion of the PM emissions that are 2.5 µm in diameter or less.

Although a complete PM emissions inventory includes PM emissions that are 10 µm in diameter or less, some measurement methods also collect PM particles that are greater than 10 µm in diameter. The following nomenclature is used to designate PM emissions that include PM greater than 10 µm in diameter:

- PM-PRI: "Primary" PM emissions of any particle size. PM-PRI = PM-FIL + PM-CON.
- PM-FIL: Filterable (or front-half catch) portion of the PM emissions of any particle size.

Table 1-1. Summary of Pollutants and Emission Sources Inclusion in a Petroleum Refinery's Emission Inventory

CAS Number or Pollutant Code	Substance	Equipment Leaks	Storage Tanks	Stationary Combustion	Process Vents										Flares	Wastewater	Cooling Towers	Product Loading	Fugitive Dust Sources	Startup/Shutdown	Malfunctions
					Catalytic Cracking Unit	Fluid Coking Unit	Delayed Coking Unit	Catalytic Reforming Unit	Sulfur Recovery Plants	Hydrogen Plant	Asphalt Plant	Coke Calcining	Blowdown Systems	Vacuum Systems							
Criteria Pollutants																					
630-08-0	Carbon monoxide			●	●	●				●		●			●					○	○
7439-92-1	Lead			●	●	●						○							○	○	○
PM10-PRI	Particulate matter (PM) ≤ 10 micrometers (µm)			●	●	●	●				●	●			●		●		●	○	○
PM10-FIL	Filterable PM ≤ 10 µm			●	●	●	●				●	●			●		●		●	○	○
PM25-PRI	PM ≤ 2.5 µm			●	●	●	●				●	●			●		●		●	○	○
PM25-FIL	Filterable PM ≤ 2.5 µm			●	●	●	●				●	●			●		●		●	○	○
PM-CON	Condensable PM			●	●	●	●				●	●			●		●		○	○	○
10102-44-0	Nitrogen dioxide			●	●	●			●			●			●					○	○
NO_X	Nitrogen oxides			●	●	●			●			●			●					○	○
7446-09-5	Sulfur dioxide			●	●	●			●			●			●					●	●
VOC	Volatile organic compounds	●	●	●	●	●	●	●		●	●	●	●	●	●	●	●	●		●	●
Specific VOC Constituents (Compounds listed below plus those listed under "Volatile Organic HAPs")																					
74-85-1	Ethylene	○	○	○	○	○	○	○		○	○	○	○	○	○	○	○	○		○	○
74-86-2	Acetylene	○	○	○	○	○	○	○		○	○	○	○	○	○	○	○	○		○	○
74-98-6	Propane	○	○	○	○	○	○	○		○	○	○	○	○	○	○	○	○		○	○
115-07-1	Propylene	○	○	○	○	○	○	○		○	○	○	○	○	○	○	○	○		○	○
463-49-0	Propadiene	○	○	○	○	○	○	○		○	○	○	○	○	○	○	○	○		○	○
106-97-8	n-Butane	○	○	○	○	○	○	○		○	○	○	○	○	○	○	○	○		○	○
75-28-5	Isobutane	○	○	○	○	○	○	○		○	○	○	○	○	○	○	○	○		○	○
106-98-9	1-Butene	○	○	○	○	○	○	○		○	○	○	○	○	○	○	○	○		○	○
107-01-7	2-Butene	○	○	○	○	○	○	○		○	○	○	○	○	○	○	○	○		○	○
115-11-7	Isobutene	○	○	○	○	○	○	○		○	○	○	○	○	○	○	○	○		○	○

(continued)

Table 1-1. Summary of Pollutants and Emission Sources Inclusion in a Petroleum Refinery's Emission Inventory (continued)

CAS Number or Pollutant Code	Substance	Equipment Leaks	Storage Tanks	Stationary Combustion	Process Vents										Flares	Wastewater	Cooling Towers	Product Loading	Fugitive Dust Sources	Startup/Shutdown	Malfunctions
					Catalytic Cracking Unit	Fluid Coking Unit	Delayed Coking Unit	Catalytic Reforming Unit	Sulfur Recovery Plants	Hydrogen Plant	Asphalt Plant	Coke Calcining	Blowdown Systems	Vacuum Systems							
590-19-2	1,2-Butadiene	○	○	○	○	○	○	○		○	○	○	○	○	○	○	○	○		○	○
109-66-0	n-pentane	○	○	○	○	○	○	○		○	○	○	○	○	○	○	○	○		○	○
78-78-4	2-Methylbutane	○	○	○	○	○	○	○		○	○	○	○	○	○	○	○	○		○	○
287-92-3	Cyclopentane	○	○	○	○	○	○	○		○	○	○	○	○	○	○	○	○		○	○
591-95-7	1,2-Pentadiene	○	○	○	○	○	○	○		○	○	○	○	○	○	○	○	○		○	○
1574-41-0	1-cis-3-Pentadiene	○	○	○	○	○	○	○		○	○	○	○	○	○	○	○	○		○	○
2004-70-8	1-trans-3-Pentadiene	○	○	○	○	○	○	○		○	○	○	○	○	○	○	○	○		○	○
591-93-5	1,4-Pentadiene	○	○	○	○	○	○	○		○	○	○	○	○	○	○	○	○		○	○
591-96-8	2,3-Pentadiene	○	○	○	○	○	○	○		○	○	○	○	○	○	○	○	○		○	○
598-25-4	3-Methyl-1,2-butadiene	○	○	○	○	○	○	○		○	○	○	○	○	○	○	○	○		○	○
78-79-5	2-Methyl-1,3-butadiene	○	○	○	○	○	○	○		○	○	○	○	○	○	○	○	○		○	○
542-92-7	Cyclopentadiene	○	○	○	○	○	○	○		○	○	○	○	○	○	○	○	○		○	○
110-82-7	Cyclohexane	○	○	○	○	○	○	○		○	○	○	○	○	○	○	○	○		○	○
108-87-2	Methylcylcohexane	○	○	○	○	○	○	○		○	○	○	○	○	○	○	○	○		○	○
142-82-5	Heptane (and isomers)	○	○	○	○	○	○	○		○	○	○	○	○	○	○	○	○		○	○
111-65-9	Octane (and isomers)	○	○	○	○	○	○	○		○	○	○	○	○	○	○	○	○		○	○
78-93-3	Methyl ethyl ketone	○	○	○	○	○	○	○		○	○	○	○	○	○	○	○	○		○	○
25551-13-7	Trimethylbenzene(s)	○	○	○	○	○	○	○		○	○	○	○	○	○	○	○	○		○	○
Hazardous Air Pollutants (HAPs)																					
Volatile Organic HAPs																					
75-07-0	Acetaldehyde	○	○	●	●	●	●	●	○	●	●	●	○	○	●	○	○	○		○	○
107-02-8	Acrolein	○	○	●	●	●	●	●	○	○	○	●	○	○	●	○	○	○		○	○
62-53-3	Analine	○	○	●	●	●	●	●	○	○	○	●	○	○	●	○	○	○		○	○
71-43-2	Benzene	●	●	●	●	●	●	●		●	●	●	●	●	●	●	●	●		●	●
74-83-9	Bromomethane	○	○													○	○				
106-99-0	1,3-Butadiene	●	●	●	●	●	●	●		●	●	●	●	●	●	●	●	●		●	●
75-00-3	Chloroethane	○	○					○								○	○				

(continued)

Table 1-1. Summary of Pollutants and Emission Sources Inclusion in a Petroleum Refinery's Emission Inventory (continued)

CAS Number or Pollutant Code	Substance	Equipment Leaks	Storage Tanks	Stationary Combustion	Process Vents										Flares	Wastewater	Cooling Towers	Product Loading	Fugitive Dust Sources	Startup/Shutdown	Malfunctions
					Catalytic Cracking Unit	Fluid Coking Unit	Delayed Coking Unit	Catalytic Reforming Unit	Sulfur Recovery Plants	Hydrogen Plant	Asphalt Plant	Coke Calcining	Blowdown Systems	Vacuum Systems							
67-66-3	Chloroform	○	○					●								○	○				
74-87-3	Chloromethane	○	○					○								○	○				
98-82-8	Cumene	●	●	●	●	●	●	●		●	●	●	●	●	●	●	●	●		●	●
106-93-4	1,2-Dibromoethane	○	○					○								○	○	○			
106-46-7	1,4-Dichlorobenzene	○	○	○				○								○	○				
75-34-3	1,1-Dichloroethane	○	○					○								○	○				
107-06-2	1,2-Dichloroethane	○	○					○								○	○				
75-35-4	1,1-Dichloroethylene	○	○					●								○	○				
78-87-5	1,2-Dichloropropane	○	○					○								○	○				
542-75-6	1,3-Dichloropropene	○	○					○								○	○				
111-42-2	Diethanolamine	●	●						●							○	○			○	○
100-41-4	Ethylbenzene	●	●	●	●	●	●	●		●	●	●	●	●	●	●	●	●		●	●
50-00-0	Formaldehyde	○	○	●	●	●	●	●		●	●	●	○	○	●	○	○	○		●	●
67-72-1	Hexachloroethane	○	○					○								○					
110-54-3	n-Hexane	●	●	●	●	●	●	●		●	●	●	●	●	●	●	●	●		●	●
67-56-1	Methanol									●	●					○	○				
108-10-1	Methyl isobutyl ketone	●	●	●	●	●	●	●		●	●	●	●	●	●	●	●	●		●	●
1634-04-4	Methyl tert-butyl ether	○	○	○	○	○	○	○		○	○	○	○	○	○	○	○	○		○	○
100-42-5	Styrene	●	●	●	●	●	●	●		●	●	●	●	●	●	●	●	●		●	●
79-34-5	1,1,2,2-Tetrachloroethane	○	○					●								○	○				
127-18-4	Tetrachloroethylene	○	○					●								○	○				
108-88-3	Toluene	●	●	●	●	●	●	●		●	●	●	●	●	●	●	●	●		●	●
79-00-5	1,1,2-Trichloroethane	○	○					●								○	○				
79-01-6	Trichloroethylene	○	○					●								○	○				
121-44-8	Triethylamine	●	●						●							○	○			○	○
540-84-1	2,2,4-Trimethylpentane	●	●	●	●	●	●	●		●	●	●	●	●	●	●	●	●		●	●
593-60-2	Vinyl bromide	○	○					○								○	○				

(continued)

Table 1-1. Summary of Pollutants and Emission Sources Inclusion in a Petroleum Refinery's Emission Inventory (continued)

CAS Number or Pollutant Code	Substance	Equipment Leaks	Storage Tanks	Stationary Combustion	Process Vents										Flares	Wastewater	Cooling Towers	Product Loading	Fugitive Dust Sources	Startup/Shutdown	Malfunctions
					Catalytic Cracking Unit	Fluid Coking Unit	Delayed Coking Unit	Catalytic Reforming Unit	Sulfur Recovery Plants	Hydrogen Plant	Asphalt Plant	Coke Calcining	Blowdown Systems	Vacuum Systems							
75-01-4	Vinyl chloride	○	○					●								○	○				
95-47-6	o-Xylene	●	●	●	●	●	●	●		●	●	●	●	●	●	●	●	●		●	●
108-38-3	m-Xylene	●	●	●	●	●	●	●		●	●	●	●	●	●	●	●	●		●	●
106-42-3	p-Xylene	●	●	●	●	●	●	●		●	●	●	●	●	●	●	●	●		●	●
1330-20-7	Xylenes (total)	●	●	●	●	●	●	●		●	●	●	●	●	●	●	●	●		●	●
Semi-volatile and Non-volatile Organic HAPs (except dioxins, furans, and polychlorinated biphenyls [PCBs])																					
83-32-9	Acenaphthene [POM]	●	○	●	●	●	●	●	○	○	●	●	○	●	●	●	●	○	○	●	●
208-96-8	Acenaphthylene [POM]	●	○	●	●	●	●	●	○	○	●	●	○	●	●	●	●	○	○	●	●
120-12-7	Anthracene [POM]	●	○	●	●	●	●	●	○	○	●	●	○	●	●	●	●	○	○	●	●
56-55-3	Benzo(a)anthracene [POM]	●	○	●	●	●	●	●	○	○	●	●	○	●	●	●	●	○	○	●	●
50-32-8	Benzo(a)pyrene [POM]	●	○	●	●	●	●	●	○	○	●	●	○	●	●	●	●	○	○	●	●
205-99-2	Benzo(b)fluoranthene[POM]	●	○	●	●	●	●	●	○	○	●	●	○	●	●	●	●	○	○	●	●
192-97-2	Benzo(e)pyrene [POM]	●	○	●	●	●	●	●	○	○	●	●	○	●	●	●	●	○	○	●	●
191-24-2	Benzo(g,h,i)perylene[POM]	●	○	●	●	●	●	●	○	○	●	●	○	●	●	●	●	○	○	●	●
207-08-9	Benzo(k)fluoranthene[POM]	●	○	●	●	●	●	●	○	○	●	●	○	●	●	●	●	○	○	●	●
92-52-4	Biphenyl [POM]	●	○	●	●	●	●	●	○	○	●	●	○	●	●	●	●	○	○	●	●
117-81-7	Bis(2-ethyl hexyl) phthalate			○	●	●					○										
91-58-7	2-Chloronaphthalene[POM]	●	○	●	●	●	●	●	○	○	●	●	○	●	●	●	●	○	○	●	●
108-39-4	m-Cresol	●	●	●	●	●	●	●	○	○	●	●	○	●	●	●	●	●		●	●
95-48-7	o-Cresol	●	●	●	●	●	●	●	○	○	●	●	○	●	●	●	●	●		●	●
106-44-5	p-Cresol	●	●	●	●	●	●	●	○	○	●	●	○	●	●	●	●	●		●	●
1319-77-3	Cresols (total)	●	●	●	●	●	●	●	○	○	●	●	○	●	●	●	●	●		●	●
218-01-9	Chrysene [POM]	●	○	●	●	●	●	●	○	○	●	●	○	●	●	●	●	○	○	●	●
53-70-3	Dibenz(a,h) anthracene[POM]	●	○	●	●	●	●	●	○	○	●	●	○	●	●	●	●	○	○	●	●
84-74-2	di-n-Butyl phthalate			○	●	●					○										
84-66-2	Diethyl-phthalate			○	●	●					○										

(continued)

Table 1-1. Summary of Pollutants and Emission Sources Inclusion in a Petroleum Refinery's Emission Inventory (continued)

CAS Number or Pollutant Code	Substance	Equipment Leaks	Storage Tanks	Stationary Combustion	Process Vents										Flares	Wastewater	Cooling Towers	Product Loading	Fugitive Dust Sources	Startup/Shutdown	Malfunctions
					Catalytic Cracking Unit	Fluid Coking Unit	Delayed Coking Unit	Catalytic Reforming Unit	Sulfur Recovery Plants	Hydrogen Plant	Asphalt Plant	Coke Calcining	Blowdown Systems	Vacuum Systems							
57-97-6	7,12-Dimethylbenz(a) anthracene [POM]	●	○	●	●	●	●	●	○	○	●	●	○	●	●	●	●	○	○	●	●
206-44-0	Fluoranthene [POM]	●	○	●	●	●	●	●	○	○	●	●	○	●	●	●	●	○	○	●	●
86-73-7	Fluorene [POM]	●	○	●	●	●	●	●	○	○	●	●	○	●	●	●	●	○	○	●	●
193-39-5	Indeno(1,2,3-cd) pyrene [POM]	●	○	●	●	●	●	●	○	○	●	●	○	●	●	●	●	○	○	●	●
56-49-5	3-Methylchloranthrene [POM]	●	○	●	●	●	●	●	○	○	●	●	○	●	●	●	●	○	○	●	●
91-57-6	2-Methylnaphthalene [POM]	●	○	●	●	●	●	●	○	○	●	●	○	●	●	●	●	○	○	●	●
218-01-9	Chrysene [POM]	●	○	●	●	●	●	●	○	○	●	●	○	●	●	●	●	○	○	●	●
91-20-3	Naphthalene [POM]	●	●	●	●	●	●	●	○	○	●	●	○	●	●	●	●	●	○	●	●
198-55-0	Perylene [POM]	●	○	●	●	●	●	●	○	○	●	●	○	●	●	●	●	○	○	●	●
85-01-8	Phenanthrene [POM]	●	○	●	●	●	●	●	○	○	●	●	○	●	●	●	●	○	○	●	●
108-95-2	Phenol	●	●	●	●	●	●	●	○	○	●	●	○	●	●	●	●	●		●	●
129-00-0	Pyrene [POM]	●	○	●	●	●	●	●	○	○	●	●	○	●	●	●	●	○	○	●	●
Dioxins/Furans/PCBs																					
1746-01-6	Dioxin: 4D 2378[j]			●	●	●	●	●			○	○							○		
40321-76-4	Dioxin: 5D 12378[j]			○	○	○	○	○			○	○							○		
39227-28-6	Dioxin: 6D 123478[j]			○	○	○	○	○			○	○							○		
57653-85-7	Dioxin: 6D 123678[j]			○	○	○	○	○			○	○							○		
19408-74-3	Dioxin: 6D 123789[j]			○	○	○	○	○			○	○							○		
35822-46-9	Dioxin: 7D 1234678[j]			○	○	○	○	○			○	○							○		
3268-87-9	Dioxin: 8D[j]			○	○	○	○	○			○	○							○		
132-64-9	Dibenzofurans			●	●	●	●	●			○	○							○		
51207-31-9	Furan: 4F 2378[k]			○	○	○	○	○			○	○							○		
57117-41-6	Furan: 5F 12378[k]			○	○	○	○	○			○	○							○		
57117-31-4	Furan: 5F 23478[k]			○	○	○	○	○			○	○							○		
70648-26-9	Furan: 6F 123478[k]			○	○	○	○	○			○	○							○		
57117-44-9	Furan: 6F 123678[k]			○	○	○	○	○			○	○							○		

(continued)

Table 1-1. Summary of Pollutants and Emission Sources Inclusion in a Petroleum Refinery's Emission Inventory (continued)

CAS Number or Pollutant Code	Substance	Equipment Leaks	Storage Tanks	Stationary Combustion	Process Vents										Flares	Wastewater	Cooling Towers	Product Loading	Fugitive Dust Sources	Startup/Shutdown	Malfunctions
					Catalytic Cracking Unit	Fluid Coking Unit	Delayed Coking Unit	Catalytic Reforming Unit	Sulfur Recovery Plants	Hydrogen Plant	Asphalt Plant	Coke Calcining	Blowdown Systems	Vacuum Systems							
72918-21-9	Furan: 6F 123789[k]			○	○	○	○	○			○	○							○		
60851-34-5	Furan: 6F 234678[k]			○	○	○	○	○			○	○							○		
67562-39-4	Furan: 7F 1234678[k]			○	○	○	○	○			○	○							○		
55673-89-7	Furan: 7F 1234789[k]			○	○	○	○	○			○	○							○		
39001-02-0	Furan: 8F[k]			○	○	○	○	○			○	○							○		
1336-36-3	Polychlorinated biphenyls (total)			●	●	●	●	●			○	○							○		
Metal HAPs																					
7440-36-0	Antimony			●	●	●						○							○	○	○
7440-38-2	Arsenic			●	●	●						○							○	○	○
7440-41-7	Beryllium			●	●	●						○							○	○	○
7440-43-9	Cadmium			●	●	●						○							○	○	○
18540-29-9	Chromium (hexavalent)			●	●	●						○							○	○	○
7440-47-3	Chromium (total)			●	●	●						○							○	○	○
7440-48-4	Cobalt			●	●	●						○							○	○	○
7439-92-1	Lead			●	●	●						○							○	○	○
7439-96-5	Manganese			●	●	●						○							○	○	○
7439-97-6	Mercury			●	●	●						○							○	○	○
7440-02-0	Nickel			●	●	●						○							○	○	○
7782-49-2	Selenium			●	●	●						○							○	○	○
Other Inorganic HAPs																					
75-15-0	Carbon disulfide			○	○	○	○		●	○	○	○	○	○	○	○				○	○
463-58-1	Carbonyl sulfide			○	○	○	○		●	○	○	○	○	○	○	○				○	○
7782-50-5	Chlorine							●									●				
7647-01-0	Hydrogen chloride			○	○	○	○		●	○	○	○	○	○	○	○				○	○
74-90-8	Hydrogen cyanide (& cyanide compounds)			●	●	●	●	○	○	●	●	●	○	○	●	○	○	○		●	●
7664-39-3	Hydrogen fluoride	○	○														○				

(continued)

Table 1-1. Summary of Pollutants and Emission Sources Inclusion in a Petroleum Refinery's Emission Inventory (continued)

CAS Number or Pollutant Code	Substance	Equipment Leaks	Storage Tanks	Stationary Combustion	Process Vents										Flares	Wastewater	Cooling Towers	Product Loading	Fugitive Dust Sources	Startup/Shutdown	Malfunctions
					Catalytic Cracking Unit	Fluid Coking Unit	Delayed Coking Unit	Catalytic Reforming Unit	Sulfur Recovery Plants	Hydrogen Plant	Asphalt Plant	Coke Calcining	Blowdown Systems	Vacuum Systems							
7723-14-0	Phosphorus				○	○													○		
Other Compounds of Interest																					
7664-41-7	Ammonia	○	○	○	●	●						○				○	○				
74-84-0	Ethane	○	○							○	○		○	○	○	○	○	○		○	○
7783-06-4	Hydrogen sulfide	●		○	○	○	○		●		●	○	○	○	●	○				○	○
7440-39-3	Barium			○	○	○													○		
7440-50-8	Copper			○	○	○													○		
7439-98-7	Molybdenum			○	○	○													○		
7440-62-2	Vanadium			○	●	●													○		
7440-66-6	Zinc			○	○	○													○		

● Designates compound/source pairings for which emission estimates should be developed.

○ Designates compound/source pairings for which emission estimates may be developed depending on the available data.

POM Designates compounds that meet the HAP definition of polycyclic organic matter (POM).

j The listed HAP is 2,3,7,8-Tetrachlorodibenzo-p-dioxin (2378-TCDD); other dioxin isomers are listed because they can be used to calculate a 2378 TCDD toxicity equivalence. Abbreviations used in the table are as follows: 4D 2378 = 2,3,7,8-Tetrachlorodibenzo-p-dioxin; 5D 12378 = 1,2,3,7,8-Pentachlorodibenzo-p-dioxin; 6D 123478 = 1,2,3,4,7,8-Hexachlorodibenzo-p-dioxin; 6D 123678 = 1,2,3,6,7,8-Hexachlorodibenzo-p-dioxin; 6D 123789 = 1,2,3,7,8,9-Hexachlorodibenzo-p-dioxin; 7D 1234678 = 1,2,3,4,6,7,8-Heptachlorodibenzo-p-dioxin; 8D = Octachlorodibenzo-p-dioxin.

k The listed HAP is dibenzofurans. Abbreviations used in the table are as follows: 4F 2378 = 2,3,7,8-Tetrachlorodibenzofuran; 5F 12378 = 1,2,3,7,8-Pentachlorodibenzofuran; 5F 23478 = 2,3,4,7,8-Pentachlorodibenzofuran; 6F 123478 = 1,2,3,4,7,8-Hexachlorodibenzofuran; 6F 123678 = 1,2,3,6,7,8-Hexachlorodibenzofuran; 6F 123789 = 1,2,3,7,8,9-Hexachlorodibenzofuran; 6F 234678 = 2,3,4,6,7,8-Hexachlorodibenzofuran; 7F 1234678 = 1,2,3,4,6,7,8-Heptachlorodibenzofuran; 7F 1234789 = 1,2,3,4,7,8,9-Heptachlorodibenzofuran; 8F = Octachlorodibenzofuran

Carbon dioxide, methane (CH_4), and nitrous oxide are GHGs expected to be emitted from petroleum refineries, but are not listed in this table. The *Mandatory Greenhouse Gas Emissions Reporting Rule* (74 FR 56260) requires detailed GHG emission reporting from a variety of industry sectors and emission sources, including petroleum refineries and stationary combustion sources (40 *Code of Federal Regulations* [CFR] Part 98, Subparts Y and C, respectively). Consequently, this Refinery Emissions Protocol document focuses primarily on criteria and toxic air pollutants (i.e., the pollutants listed in **Table 1-1**). Emission estimates for GHG will be calculated and reported according to the methodologies and requirements in the GHG reporting rule. Note that the "tiers" used in 40 CFR Part 98 Subpart C are listed in opposite order from the "ranks" used in this Refinery Emissions Protocol document. That is, the Tier 4 method for stationary combustion sources is equivalent to Methodology Rank 1 for combustion sources in this protocol document; the Tier 3 method is equivalent to Methodology Rank 2, and so on.

While **Table 1-1** is intended to provide a comprehensive list of pollutants for each emission source for which emission estimates should be provided, there may be pollutants released from some sources for

which we have little or no information. If there is credible information that emissions of other pollutants are released from a given emission source (e.g., from a source test that was conducted on a particular process unit), then emission estimates for these additional pollutants should also be provided for that process unit, even if **Table 1-1** does not include a bullet for that pollutant/emission source combination.

1.2 Data Quality

The consistent use of standardized methods and procedures is essential in the compilation of reliable emission inventories. Quality assurance (QA) and quality control (QC) of an emission inventory are accomplished through a set of procedures that ensure the quality and reliability of data collection and analysis. These procedures include the use of appropriate emission estimation techniques, applicable and reasonable assumptions, accuracy/logic checks of computer models, and checks of calculations and data reliability. Depending upon the technical approach used to estimate emissions, a checklist with all of the particular data needs should be prepared to verify that each piece of information is used accurately and appropriately.

Appropriate metadata (data about the data) should be maintained to assist data users with assessing the accuracy of the reported emissions. QA/QC and other metadata records should also be maintained to allow verification of the reported emissions, although this information does not need to be reported unless specifically requested. For measured emissions, these metadata include manufacturer's design specifications for accuracy, initial calibrations, periodic calibration checks, and other QA/QC procedures used to ensure the accuracy of the measurement device(s). For source tests used to develop site-specific emission factors, the metadata include results of field and laboratory blanks, duplicate analyses, method detection limits, isokinetic and cyclonic flow checks (if applicable), and key process operating data (e.g., throughput, temperature, material processed). For some pollutants, there may be different methods by which the emissions can be determined. For example, VOC emissions may be determined using a "total organics" method (e.g., using EPA Method 25, 25A through 25E, or 305) and subtracting any non-VOCs present or by speciating individual VOCs and summing the emissions of these compounds to determine the overall VOC emissions. When reporting VOC emissions, therefore, it should be clearly indicated how the emissions were determined. If the emissions are determined as TOC or from a TOC measurement, it must be indicated how the emission are being reported, i.e., "as methane" (or "as" whatever compound was used to calibrate the total organic analyzer). These metadata assist users of the inventory data and help to ensure that the inventory data are correctly used when performing subsequent analyses.

1.3 Calculations and Significant Digits

The methodology ranking presented in this Refinery Emissions Protocol document is designed to highlight and promote those methods that are expected to yield the most accurate emission data. We recognize that the Methodology Rank 5 methodologies may only provide emission estimates that are within a factor of 2 or 3 from the actual emission rate. Nonetheless, the emission factors presented in this document are generally presented with two significant digits. The two significant digits should not be construed as an expectation that these emission factors are more accurate. The emission factors are provided with two significant digits because it is recommended that all calculations be performed carrying at least one additional significant digit to minimize round-off errors. The emissions calculated using default emission factors may be rounded to one significant digit when reporting the emissions, but at least two significant digits should be carried in the calculations. For methodologies that may have uncertainties in the range of ±10 percent, at least three significant digits should be carried when performing the calculations, even though the final emission estimate may only warrant two significant digits.

2. Equipment Leaks

Equipment leaks are small emission sources that occur throughout the process area of the refinery from various equipment components and connections that develop leaks that allow process fluids to escape into the atmosphere. Leaks are typically identified using EPA Method 21 (via an organic vapor analyzer [OVA]) or using optical leak imaging techniques; other remote sensing techniques can also be used to identify leaks. Although direct measurement methods provide the most accurate means of quantifying equipment leak emissions, few, if any, refineries have or will implement direct measurement of equipment leak emissions. Instead, mass emissions for several types of equipment can be estimated using correlation equations that relate mass emissions to leak concentrations that are obtained using an OVA. In the absence of concentration measurements, mass emissions can also be estimated using the number of equipment components and emission factors. Typically, these procedures estimate either total organic compound (TOC) or non-methane organic compound mass emissions. To estimate either total VOC or constituent-specific emissions, the process streams being monitored must be characterized at least to the point of identifying the typical VOC concentration.

The most common optical leak imaging technique at this time uses passive infrared spectral imaging at a wavelength that is strongly absorbed by the gas of interest to produce a real-time video image of the emission plume. Although this technology is very useful for quickly and easily identifying the presence of leaks, particularly large leaks, it has not yet been developed to the point of being able to quantify emissions. Therefore, it must be combined with other techniques as described below to quantify emissions. Other remote sensing techniques include Differential Absorption Light Detection and Ranging (LIDAR) and Solar Occultation Flux. These techniques measure either the volumetric or mass concentrations of a compound or mixture of compounds in a vertical cut through a plume. Combining these data with wind speed can be used to estimate mass flux. However, these remote sensing techniques are not yet approved by EPA as a method of quantifying emissions from equipment leaks or any other sources. Furthermore, because the measurement is conducted some distance downwind from a source, the techniques alone are not practical for identifying specific leaking equipment components. When appropriate, we will update this document to include methodologies for any optical leak imaging or other remote sensing techniques that develop to the point of being able to quantify equipment leak emissions.

Table 2-1 summarizes the hierarchy of equipment leak emission estimation techniques. The methods are ranked in terms of anticipated accuracy. Within a given measurement method (or rank), there may be alternative methods for determining the constituent-specific emissions; these compositional analysis methods are also provided in order of accuracy. It is anticipated that each refinery will use a mixture of different methods. For example, Methodology Rank 2a for equipment leaks may be used for certain components and Methodology Rank 2b for equipment leaks may be used for other components that are monitored using Method 21, depending on the availability of equipment-specific or process-specific concentration profiles for a given component or group of components. Additionally, Methodology Ranks 4 or 5 for equipment leaks may be used to estimate emissions from other components that are not routinely monitored.

The remainder of this section provides additional details and guidance regarding the ways to implement these methods. Most of the methods outlined in this section are based on the revised equipment leak protocol developed specifically for the petroleum refinery industry. For more information regarding the way in which the correlations were developed, please refer to EPA's document, *Protocol for Equipment Leak Emission Estimates* (U.S. EPA, 1995b).

For heavy liquid leaks (e.g., fuel oil, heavy gas oil, residual fuel oil, bitumen) that create a pool or puddle of liquid, emissions from the accumulated liquid pool should be estimated using the methods for spills in Section 12, *Malfunctions*, of this Refinery Emissions Protocol document in addition to using the methods

presented in this section to estimate the emissions that occur at the leaking component. The spill methodology is needed in these cases for several reasons. First, for some refinery heavy liquids, the low volatility of heavy liquids will result in a relatively low OVA reading using EPA Method 21, even with large visible leaks, so that the equipment leak methodologies are expected to understate the potential emissions from the pooled material. Second, emissions from the pooled material will be dominated by the more volatile components of the heavy liquid, and the spill methodology will more accurately assess the speciated emissions from the pooled material. Finally, the spill methodology will better account for the dimensions and duration of the liquid pool, which can be affected by the clean-up measures used.

Table 2-1. Summary of Equipment Leak Emission Estimates

Rank	Measurement Method	Correlation Equations or Emission Factor	Compositional Analysis Data[a]
1	Direct measurement (high-volume sampler or bagging)	Not necessary	Speciation of collected gas samples
2	EPA Method 21	Correlation equation	a) Process-specific, equipment-specific concentrations b) Process-specific average concentrations c) Refinery average stream concentrations
3	EPA Method 21	Default screening ranges factors	
4	No monitoring; facility-specific component counts	Default average emission factors	a) Process-specific, service-specific concentrations b) Process-specific average concentrations c) Refinery average stream concentrations d) Default process compositions
5	No monitoring; default model process component counts	Default average emission factors	

[a] The letters represent ranking sublevels. For example, rank 2a consists of using the correlation equation to estimate total VOC emissions and using process-specific and equipment-specific process fluid concentration data to estimate speciated emissions.

2.1 Methodology Rank 1 for Equipment Leaks

There are two primary quantitative leak measurement methods: the bagging method and high-volume sampling. Typically, EPA Method 21 would be used to initially screen and identify leaking components, and then one of these methods would be used to quantify the mass emission rate of the leak. Direct leak rate measurement, using either of these techniques, is accurate within ±15 percent (U.S. EPA, 2003).

In the bagging method, the leaking component or leak opening is enclosed in a “bag” or tent. An inert carrier gas (e.g., nitrogen) is conveyed through the bag at a known flow rate. Once the carrier gas attains equilibrium, a gas sample is collected from the bag, and the TOC concentration of the sample is measured. That collected gas can also be analyzed for individual compound concentrations. The mass emission rate is calculated from the measured concentrations of the bag sample and the flow rate of the carrier gas. Although bagging techniques are useful for the direct measurement of larger leaks, bagging may not be possible for equipment components that are inaccessible, unusually shaped, or very large, and it is a relatively slow process (i.e., only two or three samples per hour).

High-volume samplers are essentially vacuums that capture all of the emissions from a leaking component to accurately quantify leak emission rates. Leak emissions and a large-volume sample of the air around the leaking component are pulled into the instrument through a vacuum sampling hose. High-volume samplers are equipped with dual hydrocarbon detectors, which measure the concentration of hydrocarbon gas in the captured sample and the concentration of ambient hydrocarbon gas. Sample

measurements are corrected for the ambient hydrocarbon concentration, and a mass leak rate is calculated by multiplying the flow rate of the measured sample by the difference between the ambient gas concentration and the gas concentration in the measured sample. Chemical speciation of the leak, using vacuum canisters or similar methods, can be used to apportion the TOC emission rate to individual constituents. High-volume samplers measure leak rates up to 0.23 cubic meters per minute (m^3/min), which is a rate equivalent to 330 cubic meters per day (m^3/day), and can be used to quantify 10 to 20 sources per hour. Leak rates greater than 0.23 m^3/min must be measured using bagging techniques (U.S. EPA, 2003).

While bagging or high-volume sampling are more accurate than other equipment leak emission estimate methods, they are time consuming and impractical for routine screening of the large number of equipment components present at a refinery. However, some directed inspection and maintenance programs use, for example, optical imaging techniques to identify leaking components and then use high-volume sampling to quantitate the limited number of leaks identified. While these methods are more common at oil and gas production operations, they could also be applied at some refineries for certain sources. As the emission rate measured by the high-volume sampler (or bagging method) will be more accurate for that specific leak than emission estimates developed using any of the lower-ranked methodologies, the high-volume sampling (or bagging) results should be used for that specific leak if high-volume sampling (or bagging) is conducted.

2.2 Methodology Rank 2 for Equipment Leaks

Most leak detection and repair (LDAR) programs require periodic monitoring using EPA Method 21 to identify leaking components. The preferred methodology for estimating equipment leak emission rates directly from EPA Method 21 data (i.e., Methodology Rank 2 for equipment leaks) is to use the screening value correlations in the right column of **Table 2-2** (U.S. EPA, 1995b) for each individual component as screened via EPA Method 21. When a screening value of zero is registered, the default zero value in the second column in **Table 2-2** is used to estimate TOC emissions. If the monitoring instrument measures concentrations only up to 10,000 parts per million by volume (ppmv) or 100,000 ppmv, then the applicable values for pegged emission rates in **Table 2-2** are used to estimate emissions. **Table 2-2** includes screening value correlations for both the petroleum industry (applicable for petroleum refinery operations, marketing terminals, and oil and gas production) and the synthetic organic chemical manufacturing industry (SOCMI). Generally, most petroleum refineries will use the petroleum industry correlations; however, the SOCMI correlations are provided here for convenience because some refineries may also have chemical manufacturing processes that must be included in the facility's emission inventory.

Many refineries or monitoring specialists use software programs that directly record the TOC reading (or screening value) for each component. Many of these software programs will directly calculate the TOC emissions for each component using the screening value correlations and will even calculate component-specific emission rates when composition data are entered for the components. The TOC rates calculated by the correlation equation (and the default zero and pegged emission rate values) include non-VOC organic compounds, primarily methane and ethane. The uncertainty of the correlations for any single measurement may be as much as a factor of 3 higher or a factor of 10 lower than the actual emissions for that component, but when summed over thousands of components, the uncertainty in the cumulative total emissions is expected to be much less. For example, based on Monte Carlo simulations of 100 leaking components and using an uncertainty of plus or minus a factor of 10, the uncertainty in the cumulative emissions is approximately plus or minus a factor of 1.4. The advantage of Methodology Rank 2 for equipment leaks is that it is not based on a presupposed distribution of equipment leaks, as are the lower ranked methodologies. Consequently, Methodology Rank 2 for equipment leaks is much more accurate than any of the lower ranked equipment leak emission estimation methods.

Table 2-2. Equipment Leak Rate for Petroleum and SOCMI Equipment Components[a]

Equipment Type (All Services)	Default Zero Emission Rate (kg/hr/source)	Pegged Emission Rates (kg/hr/source)		Correlation Equation[b] (kg/hr/source)
		10,000 ppmv	100,000 ppmv	
Leak Rates for Petroleum Industry (Refinery, Marketing Terminals, and Oil and Gas Production)				
Valve	7.8E-06	0.064	0.14	$2.29E\text{-}06 \times SV^{0.746}$
Pump	2.4E-05	0.074	0.16	$5.03E\text{-}05 \times SV^{0.610}$
Other[c]	4.0E-06	0.073	0.11	$1.36E\text{-}05 \times SV^{0.589}$
Connector	7.5E-06	0.028	0.030	$1.53E\text{-}06 \times SV^{0.735}$
Flange	3.1E-07	0.085	0.084	$4.61E\text{-}06 \times SV^{0.703}$
Open-ended line	2.0E-06	0.030	0.079	$2.20E\text{-}06 \times SV^{0.704}$
Leak Rates for Synthetic Organic Chemical Manufacturing Industry (SOCMI)				
Gas valve	6.6E-07	0.024	0.11	$1.87E\text{-}06 \times SV^{0.873}$
Light liquid valve	4.9E-07	0.036	0.15	$6.41E\text{-}06 \times SV^{0.797}$
Light liquid pump[d]	7.5E-06	0.14	0.62	$1.90E\text{-}05 \times SV^{0.824}$
Connector	6.1E-07	0.044	0.22	$3.05E\text{-}06 \times SV^{0.885}$

Note: kg/hr/source = kilograms TOC per hour per source

[a] Data reported in U.S. EPA, 1995b.

[b] SV is the screening value (SV, ppmv) measured by the monitoring device.

[c] The "other" equipment type was developed from instruments, loading arms, pressure relief devices, stuffing boxes, vents, compressors, dump lever arms, diaphragms, drains, hatches, meters, and polished rods. This "other" equipment type should be applied to any equipment other than connectors, flanges, open-ended lines, pumps, or valves.

[d] The light liquid pump factors can also be applied to compressors, pressure relief valves, agitators, and heavy liquid pumps.

When an optical gas imaging camera is used to identify leaks, the emissions can be quantified under Methodology Rank 2 (or Methodology Rank 1 for certain components) only if both of the following conditions are met: (1) the equipment is monitored in accordance with the procedures in §63.11(e), and (2) all leaks identified by the camera are monitored before repair using Method 21 or are measured using high-volume sampling or bagging methods. For equipment found to be leaking when monitoring with the camera, either the subsequent Method 21 screening values in the applicable correlation equation should be used to estimate the emissions (Methodology Rank 2) or the leak rake rates measured via the high-volume sampling or bagging method (Methodology Rank 1) should be used, as applicable. For all equipment not found to be leaking when monitoring with the camera, emissions should be estimated using the screening values obtained when conducting the annual Method 21 monitoring required by §63.11(d)(7) in the applicable correlation equations.

Example 2-1: Calculation for Methodology Rank 2 for Equipment Leaks

A refinery catalytic reforming unit (CRU) operating 8,000 hours per year (hr/yr) has 600 valves. To keep the example simple, assume Method 21 monitoring registers the screening value readings in the following table, and assume the average weight percents of methane and ethane in all streams are known or estimated to be equal to 3 percent and 1 percent of the TOC, respectively. Also assume the TOC content of each stream is 100 percent. Using Methodology Rank 2b for equipment leaks (correlation approach), what is the cumulative hourly VOC emission rate from the valves in this process unit at the time the monitoring is conducted?

To calculate the emissions, the default zero value for valves on **Table 2-2** (7.8E-06) is used to estimate the TOC emissions from the 580 valves with a screening value of 0 ppmv. The pegged emission rate for valves in **Table 2-2** (0.140) is used to estimate the TOC emission rate for the two valves with pegged readings. The correlation equation for valves in **Table 2-2** (2.29E-06 x SV^0.746) is used to estimate the emissions for each of the valves with a measured screening value. In each case, the calculated TOC emissions are multiplied by (100-4)/100 to calculate the VOC emissions.

Number of Valves	Method 21 Screening Value, ppmv	Emissions, kg/hr	
		TOC	VOC
580	0	0.00452	0.00434
5	200	0.00012	0.00011
5	400	0.00020	0.00019
2	1,500	0.00054	0.00051
2	7,000	0.00169	0.00162
2	20,000	0.00370	0.00355
2	50,000	0.00733	0.00704
2	Pegged at 100,000	0.28000	0.26880
	Total	0.30	0.29

2.2.1 Speciating Equipment Leak Emissions

In developing constituent-specific emission estimates, the composition of the process stream in contact with the equipment is used to estimate the speciated equipment leak emissions. To the extent that compositional data are available for individual process streams, each equipment component associated with that process stream should be tagged with the average composition of that process stream (Methodology Rank 2a for equipment leaks). Although an ideal situation would be if chemical speciation data were available for each equipment component (i.e., each process stream associated with each equipment component), in many cases, this level of detail may not be available. Alternatively, average compositional data may be determined for all streams in a specific process unit, for groups of streams in different portions of a process unit, or for groups of streams in a particular service type in a process unit. Under this approach, all equipment associated with the applicable group of streams would be tagged with the same concentration profile (Methodology Rank 2b for equipment leaks). For example, an average composition could be determined for all gas streams, all light liquid streams, and all heavy liquid streams at a given refinery process unit (resulting in three composition profiles per unit). Alternatively, an overall average composition could be determined for all streams (regardless of the type of service) for that process unit (resulting in one composition profile per unit). As a last resort, a single, overall average

process stream composition can be estimated on a refinery-wide basis (e.g., one concentration profile for the entire refinery, which is Methodology Rank 2c for equipment leaks). Methodology Rank 2c for equipment leak emissions is very easy to implement in that the TOC emissions can be aggregated for all components first, and then the chemical-specific emissions can be calculated from the cumulative TOC emissions. However, this method greatly reduces the accuracy of the chemical-specific emission rates. With the automated software programs that are now available for logging equipment leak readings and calculating equipment leak emissions, most refineries should be able to implement Methodology Rank 2a or 2b for equipment leaks.

The correlation equations for equipment leaks provided in **Table 2-2** provide emissions in terms of TOC (including methane and ethane). To calculate the emission rate for VOC (i.e., to exclude methane and ethane), use Equation 2-1.

$$E_{VOC} = E_{TOC} \times (WF_{VOC}/WF_{TOC}) \qquad \text{(Eq. 2-1)}$$

where:

E_{VOC} = Emission rate of VOC for a specific type of equipment (kilograms per year [kg/yr])
E_{TOC} = Emission rate of TOC for a specific type of equipment (kg/yr)
WF_{VOC} = Average weight fraction of VOC in the stream (typically TOC minus methane and ethane)
WF_{TOC} = Average weight fraction of TOC in the stream.

Table 1-1 in Section 1, *Introduction*, lists the specific organic compounds that should be included in an inventory of equipment leak emissions. Either of the following equations (Equation 2-2a or Equation 2-2b) is used to speciate emissions for specific organic compounds from a single equipment piece:

$$E_i = E_{TOC} \times (WF_i/WF_{TOC}) \qquad \text{(Eq. 2-2a)}$$

$$E_i = E_{VOC} \times (WF_i/WF_{VOC}) \qquad \text{(Eq. 2-2b)}$$

where:

E_i = Mass emissions of organic chemical “i” from the equipment (kg/yr)
WF_i = Concentration of organic chemical “i” in the equipment (weight fraction).

Example 2-2: Calculation for Speciating Equipment Leak Emissions

For Example 2-1, the measured composition of the process stream associated with one of the valves (Methodology Rank 2a) for which a screening value of 7,000 ppmv was obtained is:

Hexane	10 wt%
Toluene	8 wt%
Benzene	2 wt%
Other volatile organic compounds (VOCs)	60 wt%
Methane and ethane	4 wt%
Nitrogen	10 wt%
Water	5 wt%
Hydrogen	1 wt%

The TOC weight fraction is calculated as the sum of all of the organic compounds. The VOC weight fraction is the sum of all of the organic compounds, minus methane and ethane, as shown in the following equation:

$$WF_{VOC} = (\%Hexane + \%Toluene + \%Benzene + \%\ Other\ VOC)/100\%$$

$$= (10 + 8 + 2 + 60)/100 = 0.80$$

From Example 2-1, the valve's VOC emission rate was 0.81 grams per hour (g/hr). Equation 2-1 is used to attribute these emissions to individual components as follows:

$$E_{Hexane} = 0.81 \times (0.1/0.8) = 0.10 \text{ g/hr}$$
$$E_{Toluene} = 0.81 \times (0.08/0.8) = 0.08 \text{ g/hr}$$
$$E_{Benzene} = 0.81 \times (0.02/0.8) = 0.02 \text{ g/hr}$$
$$E_{OtherVOC} = 0.81 \times (0.60/0.8) = 0.61 \text{ g/hr}$$

2.2.2 Calculating Hourly and Annual Equipment Leak Emissions

The emissions estimated based on EPA Method 21 measurement data (i.e., Methodology Rank 2 for equipment leaks) represent the emission rate at the time when the measurements were made (i.e., hourly emission estimates). Thus, the direct emission rate calculated based on the monitored screening values should be used for the hourly emission estimate. If the components are monitored multiple times per year, the hourly emissions for each process unit should be calculated for each monitoring period (as the summation of the emissions of all components for that process unit), and the monitoring period resulting in the highest overall emission rate is to be reported as the hourly emission rate for that unit. There may be components that are monitored at different frequencies; for example, pumps may be monitored monthly, while valves are monitored either quarterly or semi-annually. In general, the hourly emissions for the process unit should only be calculated for the periods where a significant number of the components are monitored (in the example, quarterly or semi-annually). One should not take the highest hourly emission rate for each individual component, regardless of when it was monitored during the year, and then sum the maximum value for the individual components because this will tend to overstate the actual hourly emission rate from the process unit.

The first time an LDAR program is implemented, the emission estimates from the component screening measurements should be used as the emission rate for the facility (or an individual component or set of components) for all periods prior to the screening measurements (i.e., the portions of the inventory year prior to the screening measurements). However, most equipment components at a refinery are expected to be monitored for leaks on a routine basis (i.e., monthly, quarterly, or semiannually) as part of an ongoing LDAR program. Leaks greater than a certain threshold are required to be repaired within certain time frames (although many LDAR programs allow some repairs to be delayed). After repairs are made, the

repaired components should be re-screened to verify that the leak has been repaired and to provide a new starting emission rate for that component. During the next routine monitoring period, new screening values will be determined for each component, providing new instantaneous emission rate estimates for each component. The variations in component emissions during the year need to be accounted for when developing annual emission estimates for equipment components that are routinely monitored. **Figure 2-1** illustrates the three acceptable methods for estimating annual emissions from routinely (monthly, quarterly, semiannually) monitored equipment components.

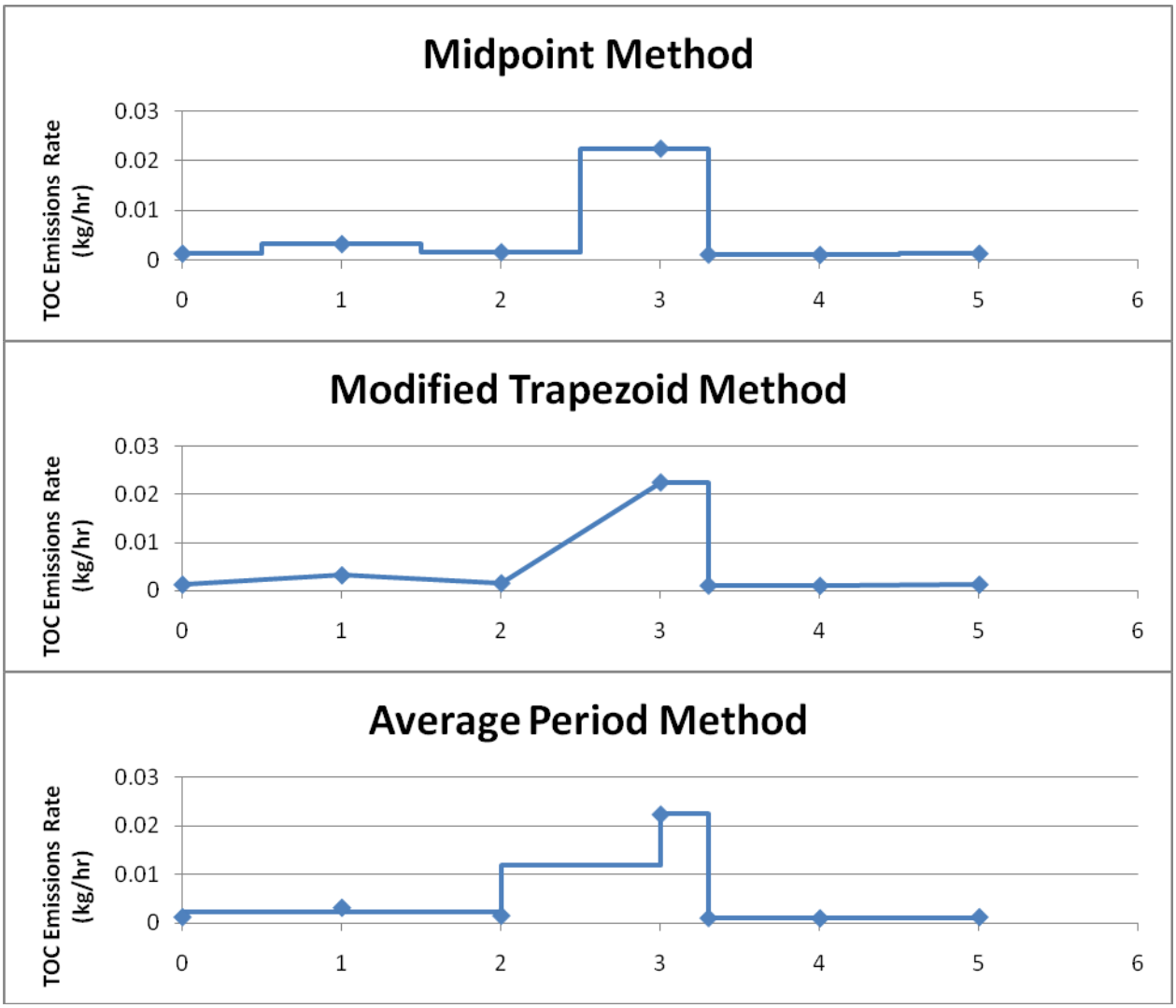

Figure 2-1. Illustration of alternative methods to determine equipment leak emissions from routine monitoring data.

The mid-period method assumes that the initial reading represents the emission rate for the first half of the period between monitoring events and that the subsequent reading represents the emission rate for the second half of the period between monitoring events. When a leak is detected for subsequent repair, the "leak" monitor reading is used from the time the leak is detected to the time it is repaired (i.e., re-screened). The modified trapezoid method assumes that the mass leak rate changes linearly between any two monitoring points, except for periods between leak detection and repair; the leak monitor reading is used from the time the leak is detected to the time it is repaired (i.e., re-screened). The average period method uses the arithmetic average emission rate of two adjacent instantaneous emission rate estimates

(except for periods between leak detection and repair) for the emission rates between the measurement periods. As in the mid-period and modified trapezoid method, the average period method uses the leak monitor reading from the time the leak is detected to the time it is repaired (i.e., re-screened). In all of these alternatives, it is important that the emission rate be determined for each component and each monitoring event before extrapolating the emissions to the intervening periods. It is invalid to average the monitored screening values first and then to calculate the emission rate based on the average screening value.

Mathematically, the calculated emissions for periods wholly within the inventory year will be identical regardless of the alternative selected. Provided that one can elect the "inventory year period" to start and end with a monitoring event, then the method selected is immaterial. The only difference in the annual emissions determined using the three alternative methods for routinely monitored components will occur if emissions must be determined for a specific time period (e.g., a calendar year), and the emissions determined for an intervening interval (between monitoring events at the end of one year and start of the next year) must be parsed between the two years. While there can be differences in the annual emissions calculated using these different methods for a particular component, these differences will tend to cancel out when emissions are summed over a large number of components. Therefore, it is only important that there is consistency in the application of the selected method (i.e., all components use the mid-period method or all components use the modified trapezoid method or all components use the average period method).

If the equipment is taken out of service (e.g., no process fluid is in the piping at the location of the specific component), the emission rate for that component can be assumed to be zero for the time period the equipment in out of service. If the process unit is not operating, but fluid remains in the components, then no correction for operating hours should be made. There can be some differences in the emissions calculated for the operating periods between monitoring intervals when the components are out of service, but these differences are expected to be small. Again, consistency in the application of the selected method is of key importance.

When emission inventories are required for a set calendar year, there are also some practical matters to consider when selecting an annual estimation method for components, especially when components are monitored semiannually or less often. The midpoint method has the advantage of not relying on the subsequent year's first semiannual monitoring if the last semiannual monitoring event for the inventory year occurred in October or later. If the last semiannual monitoring event for the inventory year occurred prior to October, then the subsequent year's first semiannual monitoring would likely occur in March or earlier, so that the inventory could be developed in a timely fashion, even if the subsequent year's monitoring data are needed to complete the inventory for the current year. Similarly, for annual component monitoring, the midpoint method would not require the subsequent year's monitoring results if monitoring occurred in July or later. On the other hand, the application of either the modified trapezoid method or the average period method requires the subsequent year's monitoring data, regardless of when that monitoring event occurs; the modified trapezoid method is further complicated in that interpolation is required to correctly account for emissions between two inventory years. If allowed, an "equipment leak year" (like a fiscal year) could be established based on the typical timing of the monitoring events, so that the emissions for that equipment leak year can be determined based entirely on whole monitoring periods.

Example 2-3: Calculation for Annual Emissions Using the Midpoint Method

The following monitoring data for a pump were recorded (Columns 1 and 2). The correlation equation from **Table 2-2** for pumps is used (i.e., $5.03E\text{-}05 \times SV^{0.610}$) to calculate the emissions rate in Column 3 when the OVA reading is greater than zero, and the default zero rate is used when the OVA reading is zero. The hours between intervals were calculated; half of the hours were assigned to the first reading, and half were assigned to the second reading, except for periods before repair, which were assigned the "leak" emission rate.

1 Date and Time	2 OVA Reading (ppm)	3 TOC Emission Rate (kg/hr)	4 Hours[a]	5 TOC Emissions (kg/period)
January 2, 8:00 a.m.	200	1.27E-3	32+372	0.51
February 2, 8:00 a.m.	300	1.63E-3	372+336	1.15
March 2, 8:00 a.m.	280	1.56E-3	336+372	1.10
April 2, 8:00 a.m.	22,000	2.24E-2	372+74	9.99
April 5, 10:00 a.m.[b]	150	1.07E-3	323	0.35
May 2, 8:00 a.m.	140	1.02E-3	323+372	0.71
June 2, 8:00 a.m.	200	1.27E-3	372+360	0.93
July 2, 8:00 a.m.	180	1.19E-3	360+372	0.87
August 2, 8:00 a.m.	500	2.23E-3	372+372	1.66
September 2, 8:00 a.m.	45,000	3.47E-2	372+241	21.27
September 12, 9:00 a.m.[b]	0	2.4E-5	239.5	0.006
October 2, 8:00 a.m.	0	2.4E-5	239.5+372	0.015
November 2, 8:00 a.m.	0	2.4E-5	372+360	0.018
December 2, 8:00 a.m.	200	1.27E-3	360+372	0.93
January 2, 8:00 a.m.	250	1.46E-3	372-32	0.50
Annual Totals			8,760	40.0 kg/yr

[a] Each emission rate applies over half of the hours since the previous screening and over half of the hours until the next screening. For example, the results from the July 2 measurement apply to half of the hours since the June 2 measurement and to half of the hours before the next measurement on August 2. The July 2 measurements occur 30 days (720 hours) after the June 2 measurement and 31 days (744 hours) before the August 2 measurements. Therefore, the July 2 results apply to 732 hours during the year (720/2 + 744/2 = 732).

[b] Indicates special Method 21 measurement reading to verify repair.

2.3 Methodology Rank 3 for Equipment Leaks

In some older LDAR programs, the only information that is recorded is whether a leak was found. For these LDAR programs, leaks were defined as screening value readings greater than 10,000 ppmv. In these cases, generally the available data are the number of components of each type at the plant and the number of components of each type found with TOC readings less than 10,000 ppmv and the number of components of each type with TOC readings greater than or equal to 10,000 ppmv. Methodology Rank 3 for equipment leaks estimates the emission rate using these data and the screening ranges emission factors in AP-42 (U.S. EPA, 1995b). **Table 2-3** provides the screening ranges emission factors for refinery and SOCMI sources; see AP-42 for additional screening ranges emission factors for marketing terminals or oil and gas production operations if these sources are also part of the facility. If the number of components and the number of leakers are recorded by process, then this provides a more accurate method for using

process-specific compositional data to estimate constituent-specific emission rates (Methodology Ranks 3a and 3b). Alternatively, the average percentage of leakers facility-wide can be used, and these data can be coupled with process-specific component counts to estimate emissions by process (Methodology Rank 3c).

Table 2-3. Screening Ranges Emission Factors[a]

Equipment type	Service	Refinery Factors[b]		SOCMI Factors[c]	
		≥10,000 ppmv emission factor (kg/hr/ source)[b]	<10,000 ppmv emission factor (kg/hr/ source)[b]	≥10,000 ppmv emission factor (kg/hr/ source)[c]	<10,000 ppmv emission factor (kg/hr/ source)[c]
Valves	Gas	0.2626	0.0006	0.0782	0.000131
	Light liquid	0.0852	0.0017	0.0892	0.000165
	Heavy liquid	0.00023	0.00023	0.00023	0.00023
Pump and agitator seals	Light liquid	0.437	0.0120	0.243	0.00187
	Heavy liquid	0.3885	0.0135	0.216	0.0210
Compressor seals	All	1.608	0.0894	1.608	0.0894
Pressure relief valves	All	1.691	0.0447	1.691	0.0447
Connectors	All	0.0375	0.00006	0.113	0.000081
Open-ended lines	All	0.01195	0.00150	0.01195	0.00150

[a] Data reported in U.S. EPA, 1995b.
[b] These factors are for non-methane organic compound emissions.
[c] These factors are for total organic compound emissions.

The uncertainty of the leak rates calculated using the screening ranges emission factors for any single measurement may be a factor of 10 or more. Although this methodology is intended to account for reduced emissions gained by an LDAR program, the underlying default leak rates are based on the distribution of leaks prior to the implementation of an LDAR program. This method is expected to be biased high for facilities that have implemented an LDAR program, especially an LDAR program with leak action levels less than 10,000 ppmv. First, the implementation of any LDAR program is expected to alter not only the prevalence of leaks, but the relative magnitude of leaks above the action level (i.e., the average component leak rate for components with screening values of 10,000 ppmv or more). Furthermore, if an LDAR program uses a 1,000 ppmv leak action level, the relative magnitude and number of leaks with screening values between 1,000 ppmv and 10,000 ppmv is expected to be much less than for facilities that use a 10,000 ppmv screening level or do not have an LDAR program. The distribution of leaks is also affected by the monitoring frequency, so components that are monitored quarterly are expected to have a different leak frequency distribution than components that are monitored annually. As such, the emissions estimated using Methodology Rank 3 for equipment leaks is expected to be an upper-range emission estimate of equipment leak emissions. The accuracy of this method is dependent on the level of LDAR program used; the more frequent the monitoring and the lower the leak action level is, the more likely this method will be to significantly overestimate emissions (by as much as a factor of 10 to 50, based on data from Lev-On et al. [2007]).

The leak/no-leak factors presented by Lev-On et al. (2007) were evaluated for facilities that use an optical gas imaging camera to identify leaks as a potential Methodology Rank 3 for equipment leaks. However, for the same reasons the screening ranges emission factors presented in **Table 2-3** are expected to overestimate actual emissions for facilities that have implemented a stringent LDAR program, the leak/no-leak factors presented by Lev-On et al. (2007) are expected to underestimate the emissions from

facilities that only use an optical gas imaging camera. The leak/no-leak factors presented by Lev-On et al. (2007) are based on a distribution of leaks for refineries that used quarterly monitoring with a leak definition of 1,000 ppmv. Most optical gas imaging cameras have leak detection sensitivities much higher than this level. As such, the distribution of leaks by screening range is expected to be much different than the baseline distribution used to develop the leak/no-leak factors for optical imaging cameras. Until leak/no-leak factors are available for a more representative distribution of leaks, there is no acceptable Methodology Rank 3 for quantifying emissions using an optical gas imaging camera.

2.3.1 Speciating Equipment Leak Emissions

The refinery screening ranges emission factors are for non-methane organic compound emissions. To apply the refinery screening ranges emission factor approach, use Equation 2-3 to calculate the total annual TOC emissions per type of equipment for which Methodology Rank 3 is used. Note: Equation 2-3 should be applied separately to groups of equipment in streams with significantly different methane weight fractions. The SOCMI screening ranges emission factors are presented in terms of TOC, so Equation 2-3 does not apply to the SOCMI factors. For both refinery and SOCMI screening ranges emission factors, use Equations 2-1 and 2-2a or 2-2b (presented previously in Section 2.2.1) to calculate the VOC and specific compound emissions, respectively.

$$E_{TOC} = \left(\left[F_G \times \left(\frac{WF_{TOC}}{WF_{TOC} - WF_m} \right) \times N_G \right] + \left[F_L \times \left(\frac{WF_{TOC}}{WF_{TOC} - WF_m} \right) \times N_L \right] \right) \qquad \text{(Eq. 2-3)}$$

where:

E_{TOC} = Emission rate of TOC for a specific type of equipment (kg/hr)
F_G = Applicable emission factor for specific type of equipment type with screening values greater than or equal to 10,000 ppmv (kg/hr/source)
F_L = Applicable emission factor for specific type of equipment with screening values less than 10,000 ppmv (kg/hr/source)
WF_{TOC} = Average weight fraction of TOC in the stream
WF_m = Average weight fraction of methane in the stream
N_G = Equipment count (specific equipment type) for sources with screening values greater than or equal to 10,000 ppmv
N_L = Equipment count (specific equipment type) for sources with screening values less than 10,000 ppmv.

2.3.2 Calculating Hourly and Annual Equipment Leak Emissions

Typically, facilities that use Methodology Rank 3 have limited data. The instantaneous emission rate measured during a given monitoring event is used directly as the hourly emission rate for the process unit at that time. If the facility monitors annually, the instantaneous emission rate calculated for a given process or facility is used directly as the hourly emission rate for the process unit. The annual emissions for the process unit are calculated using the hourly emission rate and annual operating hours of the process equipment as shown in Equation 2-4. If more than one monitoring event occurs during the year, the instantaneous (hourly) emission rates calculated for each monitoring period are calculated and the highest value is reported for the hourly emissions. The annual emissions are calculated as the average of the calculated instantaneous emission rates multiplied by the operating hours of the equipment.

$$E_{TOC,annual} = E_{TOC} \times H \qquad \text{(Eq. 2-4)}$$

where:

$E_{TOC,annual}$ = Annual emission rate of TOC for a specific type of equipment (kilograms per year [kg/yr])
E_{TOC} = Emission rate of TOC for a specific type of equipment (kg/hr)
H = Operating hours per year (hr/yr).

Example 2-4: Calculation for Methodology Rank 3 for Equipment Leaks

For the valves in the same reforming unit described in Example 2-1, what is the cumulative hourly VOC emission rate when Methodology Rank 3 is used? What are the annual VOC emissions? Assume that the distribution of valves in gas, light liquid, and heavy liquid service is as shown in the table below, and assume that the valves were monitored once during the year.

To calculate hourly TOC emissions for valves in gas service with screening values less than 10,000 ppmv, use the second half of Equation 2-3.

$$E_{TOC} = [F_L \times (WF_{TOC}/(WF_{TOC} - WF_m)) \times N_L]$$
$$= [0.0006 \times (100/(100\text{-}3)) \times 236]$$
$$= 0.146 \text{ kg TOC/hr}$$

Use the same procedure to calculate emissions for valves in light liquid service and heavy liquid service of 0.514 kilograms of TOC per hour (kg TOC/hr) and 0.015 kg TOC/hr, respectively. Thus, the total TOC emissions for all valves with screening values less than 10,000 ppmv are 0.675 kg/hr. Use Equation 2-1 to calculate the VOC emissions from these valves.

$$E_{VOC} = E_{TOC} \times (WF_{VOC}/WF_{TOC})$$
$$= 0.675 \times (100\text{-}4)/100$$
$$= 0.648 \text{ kg VOC/hr}$$

Use the same procedure with the first half of Equation 2-3 to estimate TOC emissions of 1.076 kg/hr from the valves with screening values equal to or greater than 10,000 ppmv, and apply Equation 2-1 to calculate VOC emissions of 1.033 kg/hr. Total annual emissions are calculated to be 13,400 kg VOC/yr (1.68 kg/hr x 8,000 hr/yr).

Screening Value, ppmv	Number of Valves by Type of Service			Emission Factors, kg/hr/source			TOC Emissions, kg/hr	VOC Emissions, kg/hr
	Gas	Light Liquid	Heavy Liquid	Gas	Light Liquid	Heavy Liquid		
<10,000	236	293	65	0.0006	0.0017	0.00023	0.675	0.648
≥10,000	3	3	0	0.2626	0.0852	0.00023	1.076	1.033
								1.68

2.4 Methodology Ranks 4 and 5 for Equipment Leaks

Methodology Ranks 4 and 5 for equipment leaks should be used only for components that are not being routinely monitored for leaks. For refineries, this might be processes that have low hazardous air pollutant (HAP) and low VOC content, or it might be specific types of components that are either classified as unsafe to monitor (e.g., certain pumps and valves) or are not subject to the monitoring requirements (e.g.,

connectors) in the new source performance standards (NSPS) or Petroleum Refinery Maximum Achievable Control Technology (MACT) I rules. Facility- or process-specific component counts (Methodology Rank 4 for equipment leaks) should be used when these data are available. Methodology Rank 4 is preferred over default component counts (Methodology Rank 5 for equipment leaks) because these defaults may not account for facility-specific factors (e.g., control of pressure relief valves).

Default component counts (Methodology Rank 5 for equipment leaks) are dependent on the size of the refinery and the process units present. The median (default) equipment component counts for small refineries (those less than 50,000 barrels per calendar day [bbl/cd])[1] and large refineries (greater than 50,000 bbl/cd) as presented in EPA's document, *Locating and Estimating Air Emissions from Sources of Benzene* (U.S. EPA, 1998a), are presented in **Tables 2-4 and 2-5**, respectively.

For both Methodology Ranks 4 and 5 for equipment leaks, default emission factors per component for uncontrolled or unmonitored components must be used. It is assumed that these components are not monitored because emissions from monitored components should be estimated using a higher ranked methodology (Methodology Rank 1, 2, or 3 for equipment leaks). The default emission factor per component for uncontrolled or unmonitored components is provided in EPA's document, *Protocol for Equipment Leak Emission Estimates* (U.S. EPA, 1995b). These emission factors for refinery and SOCMI components are summarized in **Table 2-6**.

2.4.1 Speciating Equipment Leak Emissions

The emission factors for refinery components in **Table 2-6** were developed to estimate emissions of non-methane organic compounds (NMOCs). Therefore, to estimate VOC emissions, the emission factor must be multiplied by the ratio of the VOC-to-NMOC weight fractions. Additionally, the emission factors apply specifically to streams that are 100 percent TOC. To calculate VOC emissions from equipment in contact with a stream that contains both organic compounds and other compounds, such as nitrogen or water vapor, the emission factor must be multiplied by the TOC weight fraction in the stream. As a result, TOC, methane, and ethane weight fractions must be known or estimated in order to calculate the VOC emissions as shown in Equation 2-5.

$$E_{VOC} = FA \times \left(\frac{WF_{TOC} - WF_{ethane} - WF_{methane}}{WF_{TOC} - WF_{methane}} \right) \times WF_{TOC} \times N \qquad \text{(Eq. 2-5)}$$

where:

E_{VOC} = Emission rate of VOC from all equipment in the stream of a given equipment type (kg/hr)
FA = Applicable average non-methane organic compounds emission factor for the equipment type (kg/hr/source)
WF_{TOC} = Average weight fraction of TOC in the stream
WF_{ethane} = Average weight fraction of ethane in the stream
$WF_{methane}$ = Average weight fraction of methane in the stream
N = Number of pieces of equipment of the applicable equipment type in the stream.

[1] Barrels per calendar day is the amount of crude that a refinery can process under usual operating conditions and is expressed in terms of actual capacity during a 24-hour period (i.e., actual annual capacity divided by 365 days). The other typical capacity measure, barrels per stream day (bbls/sd), is the maximum number of barrels of crude that a refinery can process within a 24-hour period when running at full capacity.

Table 2-4. Median Equipment Leak Component Counts for Small Model Processes[a]

Process Unit	Valves			Pumps		Compressors	Pressure Relief Valves			Flanges			Open-Ended Lines	Sampling Connections
	Gas	Light Liquid	Heavy Liquid	Light Liquid	Heavy Liquid		Gas	Light Liquid	Heavy Liquid	Gas	Light Liquid	Heavy Liquid		
Crude distillation	75	251	216	8	8	2	6	6	5	164	555	454	39	10
Alkylation (sulfuric acid)	278	582	34	18	10	1	12	15	4	705	1,296	785	20	16
Alkylation (HF)	102	402	62	13	3	2	12	13	0	300	1,200	468	26	8
Catalytic reforming	138	234	293	8	5	3	5	3	3	345	566	732	27	6
Hydrocracking	300	375	306	12	9	2	9	4	4	1,038	892	623	25	10
Hydrotreating/hydrorefining	100	208	218	5	5	2	5	3	5	290	456	538	20	6
Catalytic cracking	186	375	450	13	14	2	8	8	7	490	943	938	8	8
Thermal cracking (visbreaking)	206	197	0	7	0	0	4	0	0	515	405	0	0	4
Thermal cracking (coking)	148	174	277	9	8	2	7	16	13	260	322	459	13	8
Hydrogen plant	168	41	0	3	0	2	4	2	0	304	78	0	8	4
Asphalt plant	120	334	250	5	8	2	5	10	9	187	476	900	16	6
Product blending	67	205	202	6	11	1	10	6	22	230	398	341	33	14
Sulfur plant	58	96	127	6	6	3	3	88	15	165	240	345	50	3
Vacuum distillation	54	26	84	6	6	2	2	5	2	105	121	230	16	4
Full-range distillation	157	313	118	7	4	2	5	4	6	171	481	210	20	6
Isomerization	270	352	64	9	2	2	7	10	1	432	971	243	7	8
Polymerization	224	563	15	12	0	1	10	5	3	150	450	27	5	7
MEK dewaxing	145	1,208	200	35	39	3	10	14	4	452	1,486	2,645	19	17
Other lube oil processes	153	242	201	7	5	2	5	5	5	167	307	249	60	6

[a] Process component counts as presented in EPA's document, *Locating and Estimating Air Emissions from Sources of Benzene* (U.S. EPA, 1998a), for refineries with crude capacities less than 50,000 bbl/cd.

Table 2-5. Median Equipment Leak Component Counts for Large Model Processes[a]

Process Unit	Valves			Pumps		Compressors	Pressure Relief Valves			Flanges			Open-Ended Lines	Sampling Connections
	Gas	Light Liquid	Heavy Liquid	Light Liquid	Heavy Liquid		Gas	Light Liquid	Heavy Liquid	Gas	Light Liquid	Heavy Liquid		
Crude distillation	204	440	498	15	14	2	7	5	12	549	982	1,046	75	9
Alkylation (sulfuric acid)	192	597	0	21	0	2	13	4	0	491	1,328	600	35	6
Alkylation (HF)	104	624	128	13	8	1	9	11	1	330	1,300	180	40	14
Catalytic reforming	310	383	84	12	2	3	8	11	0	653	842	132	48	9
Hydrocracking	290	651	308	22	12	2	10	12	0	418	1,361	507	329	28
Hydrotreating/hydrorefining	224	253	200	7	6	2	9	4	8	439	581	481	49	8
Catalytic cracking	277	282	445	12	12	2	11	9	13	593	747	890	59	15
Thermal cracking (visbreaking)	110	246	130	7	6	1	6	3	15	277	563	468	30	7
Thermal cracking (coking)	190	309	250	12	11	1	8	5	10	627	748	791	100	10
Hydrogen plant	301	58	0	7	360	3	4	139	0	162	148	0	59	21
Asphalt plant	76	43	0	4	0	0	3	7	0	90	90	0	24	24
Product blending	75	419	186	10	10	2	9	16	6	227	664	473	24	8
Sulfur plant	100	125	110	8	3	1	4	4	4	280	460	179	22	7
Vacuum distillation	229	108	447	2	12	1	5	1	4	473	136	1,072	0	7
Full-range distillation	160	561	73	14	2	2	7	8	2	562	1,386	288	54	6
Isomerization	164	300	78	9	5	2	15	5	2	300	540	265	36	7
Polymerization	129	351	82	6	2	0	7	12	28	404	575	170	17	9
MEK dewaxing	419	1,075	130	29	10	4	33	6	18	1,676	3,870	468	0	7
Other lube oil processes	109	188	375	5	16	3	8	6	20	180	187	1,260	18	9

[a] Process component counts as presented in EPA's document, *Locating and Estimating Air Emissions from Sources of Benzene* (U.S. EPA, 1998a), for refineries with crude capacities greater than 50,000 bbl/cd.

Table 2-6. Refinery and SOCMI Average Component Emission Factors[a]

Equipment Type	Service	Refinery Emission Factor (kg/hr/source)[b]	SOCMI Emission Factor (kg/hr/source)[c]
Valves	Gas	0.0268	0.00597
	Light liquid	0.0109	0.00403
	Heavy liquid	0.00023	0.00023
Pump seals[d]	Light liquid	0.114	0.0199
	Heavy liquid	0.021	0.00862
Compressor seals	Gas	0.636	0.228
Pressure relief valves	Gas	0.16	0.104
Connectors	All	0.00025	0.00183
Open-ended lines	All	0.0023	0.0017
Sampling connections	All	0.0150	0.0150

Note: kg/hr/source = kilograms per hour per source
[a] Source: U.S. EPA, 1995b.
[b] The refinery emission factors are for non-methane organic compound emission rates.
[c] The SOCMI emission factors are for TOC (including methane).
[d] The light liquid pump seal factor can be used to estimate the leak rate from agitator seals.

If a process stream contains no ethane, the non-methane organic fraction is equal to the VOC fraction, which means the emission factor can be used without the correction ratio noted above, and the equation simplifies to Equation 2-6:

$$E_{VOC} = FA \times WF_{TOC} \times N \qquad \text{(Eq. 2-6)}$$

Two guidelines when correcting the "FA" term when applied to refineries are as follows:

- The correction should only be applied to equipment containing a mixture of organics and methane.
- The maximum correction for the methane weight fraction should not be greater than 0.10, even if the equipment contains greater than 10 weight percent of methane. (This reflects the fact that the equipment for which the average refinery emission factors in **Table 2-6** were developed typically contained 10 weight percent or less of methane).

When using Methodology Ranks 4 and 5, speciated emissions are calculated using the same procedures described in Section 2.2.1 of this document. Preferably, facility- or process-specific compositional analyses would be available to develop constituent-specific emission estimates. When facility-specific data are not available, average stream compositions presented in **Table 2-7** should be used. The average stream compositions presented in **Table 2-7** were calculated based on the Petroleum Environmental Research Forum (PERF) refinery process stream speciation study (API, 2002).

2.4.2 Calculating Hourly and Annual Equipment Leak Emissions

Equations 2-5 and 2-6 provide the hourly emission rate. Because the components for which Methodology Ranks 4 or 5 for equipment leaks is applicable are not monitored, there are no additional considerations other than operating hours of the equipment (as seen in Equation 2-4) to convert the hourly emission estimate into an annual value.

Example 2-5: Calculation of Equipment Leak Emissions Using Refinery Average Emission Factors

At a refinery, assume there are 100 gas valves in a stream that, on average, contains 80 weight percent non-methane organic compounds, 10 weight percent water vapor, 10 weight percent methane, and no ethane (thus, the TOC weight percent would be 90). If the process operates 8,000 hours per year, what are the hourly and annual VOC emissions from the 100 gas valves?

Because the process stream contains no ethane, the average hourly VOC emissions from the gas valves in the stream can be calculated using the applicable emission factor from **Table 2-5** and Equation 2-6.

$$E_{VOC} = FA \times WF_{TOC} \times N$$
$$= 0.0268 \text{ kg NMOC/hr/gas valve} \times 0.9 \times 100 \text{ gas valves}$$
$$= 2.412 \text{ kg VOC/hr}$$

The annual emissions from the valves in the stream are calculated using Equation 2-4 (with E_{TOC} replaced by E_{VOC}).

$$E_{VOC,\ annual} = E_{VOC} \times H$$

$$= 2.412 \text{ kg VOC/hr} \times 8{,}000 \text{ hr/yr}$$

Table 2-7. Concentration of HAP in Refinery Process Unit Streams[a]

Process Unit	Average Weight Percent of Compound in Process Unit Stream										
	1,3-Butadiene	n-Hexane	2,2,4-Trimethyl pentane	Benzene	Toluene	Xylenes (total)	Ethylbenzene	Cumene	1,2,4-trimethyl benzene	Naphthalene	Biphenyl
Crude/Atmospheric distillation	0.01	4.3	0.05	0.9	1.7	2.0	0.63	0.12	0.63	0.25	0.06
Vacuum distillation	-	0.01	0.003	0.003	0.04	0.04	0.02	-	0.02	0.12	0.09
Coking	0.04	2.5	0.75	0.42	1.3	1.3	1.3	0.12	0.7	0.28	-
Hydrocracking	0.025	1.9	1.0	1.3	2.7	2.7	0.7	0.09	1.3	0.20	-
Catalytic cracking/FCCU	0.012	1.0	0.3	1.0	3.3	4.9	1.1	0.10	1.9	0.72	0.43
Catalytic reforming/CRU	0.009	2.8	0.25	6.3	17.4	17.6	3.9	0.42	5.9	0.87	-
Hydrotreating/ Hydrode sulfurization	-	1.9	-	0.37	1.7	1.9	0.37	0.07	0.4	0.25	0.22
Alkylation	0.22	1.6	25	0.03	2.0	0.08	-	-	-	-	-
Isomerization	-	3.2	0.01	0.5	0.6	0.15	-	-	-	-	-
Polymerization	-	0.5	0.7	1.2	-	1.8	1.2	0.09	-	-	-

[a] Source: API, 2002.

3. Storage Tanks

Storage tanks (which are also sometimes referred to as storage vessels) are used in refineries for storing and dispensing various liquids used in the refining process. These various liquids are typically organic liquids, also known as petroleum liquids, which are a mixture of hydrocarbons, such as gasoline and crude oil. Depending on the specific design and construction of the tank and the characteristics of the petroleum liquids, storage tanks may emit significant levels of VOC and HAP during typical operation, venting, and tank filling or dispensing.

The basic designs for storage tanks include horizontal and vertical fixed-roof tanks, external floating roof tanks, internal floating roof tanks, and domed external floating roof tanks. Chapter 7.1 (Organic Liquid Storage Tanks) of EPA's *Compilation of Air Pollutant Emission Factors* (AP-42) provides detailed descriptions of the characteristics specific to each tank type (U.S. EPA, 1995a [some sections were updated in 2006]).

The emission estimation methods for storage tanks are presented in **Table 3-1**. These methods are ranked according to anticipated accuracy. There are three primary estimation methods: (1) direct measurement, (2) tank-specific modeling, and (3) default tank emission factors. Direct measurements can only be taken from storage tanks that are covered and vented to a control device. Tank-specific modeling can be accomplished with emission equations, such as those presented in AP-42 or by computer-based models designed to implement these equations (e.g., TANKS v4.09D; U.S. EPA, 2006). Most refinery owners and operators will have sufficient data to use the tank-specific modeling approach and this method should be used for most refinery storage vessels. In rare cases when tank-specific data are not available, engineering estimates can be made using actual or estimated production quantities and default emission factors. For the purposes of the refinery ICR, all storage tank emission estimates should be developed using Methodology Ranks 1 or 2.

Table 3-1. Summary of Typical Hierarchy of Storage Tank Emission Estimates

Rank	Methodology Description	Application	Data Requirements
1	Direct measurement	Covered and vented storage tanks	Constituent concentration and flow rate
2	Tank-specific modeling	All petroleum liquid storage tanks	Tank type, tank dimensions, stored liquid properties and constituent concentrations, tank condition/fitting information, throughput
3a	Default tank modeling	Common petroleum liquid storage tanks	Site-specific crude throughput, specific product production rates
3b	Default tank modeling	Common petroleum liquid storage tanks	Crude throughput and production capacities (from the U.S. Energy Information Administration or other similar source)

3.1 Methodology Rank 1 for Storage Tanks

Emissions from fixed-roof storage tanks may be purged (e.g., tanks under a nitrogen blanket) and vented to a control device; these emissions can be directly measured at the outlet of the control device using the direct measurement methods for process vents or combustion sources as described in Sections 4, *Stationary Combustion Sources*, and 5, *Process Vents*, of this Refinery Emissions Protocol document. It is likely that the control device will serve a group of tanks; it is acceptable to report the cumulative emissions from the group of storage tanks if this is the case.

For some control devices, such as flares, thermal oxidizers, or carbon adsorption systems, it may be possible to measure the concentration of the gas upstream of the control device and estimate the emissions using an assumed control device efficiency (for more details on these types of methods, see the discussion at the end of Section 3.2 below; Section 4, *Stationary Combustion Sources*; and/or Section 6, *Flares*). This method is also recommended as a means to estimate storage tank emissions when the emissions from the storage tank(s) are routed to a control device that also serves other refinery emission sources. In this case, the concentration and flow rate of the storage tank off-gas can be measured prior to combining the stream with other non–storage tank emissions. The resulting constituent mass flow rates can be corrected for the control device efficiency using the methods described in Chapter 6 (*Flares*) to estimate the emissions associated with the storage tank(s) that are released to the atmosphere.

There are other direct measurement methods that have been used to measure emissions from storage tanks even when the emissions from the tank are not vented (i.e., DIAL [Differential Absorption LIDAR] techniques); however, these methods do not provide continuous monitoring and have additional limitations (requiring consistent wind direction, etc.). Therefore, at the present time they are not recommended as primary techniques for annual emission estimation.

If direct measurement methods are used, emissions from the tank during degassing, cleaning, or drained idle periods may or may not be included, depending on how these gases are vented. If these gases are routed to the same control device as used during normal operations, the measured emissions will account for these periods. If these emissions are not monitored using direct measurement methods, the emissions from the tank during degassing and cleaning should be estimated separately using the methods provided in Section 11, *Startup and Shutdown*, of this Emissions Protocol Document.

3.2 Methodology Rank 2 for Storage Tanks

Except for the limited number of storage tanks whose emissions are collected and controlled external to the storage tank, EPA recommends that the emission estimation procedures detailed in Chapter 7.1 of AP-42 (U.S. EPA, 1995a) be used to calculate air pollutant emissions from organic liquid storage tanks. There are many tools available, such as TANKS v4.09D emission estimation software that can be used to perform the necessary calculations. TANKS v4.09D software can be downloaded for free at: http://www.epa.gov/ttn/chief/software/tanks/index.html under the *How to Get TANKS 4.09D* link. Because TANKS v4.09D is widely used, Appendix C of this Refinery Emissions Protocol document provides tips and insights on using the TANKS program.

Key things to consider when estimating emissions from storage tanks (whether using the AP-42 equations directly or when using TANKS v4.09D or other software packages) include:

1. Each tank should be modeled individually using site-specific conditions. There may be instances in which a set of tanks have identical properties and materials and very similar throughputs so that the emissions from a single storage tank can be modeled and used as the emissions for each tank in the set. However, this approach should be limited to situations where the tanks, contents, and throughputs are effectively identical. In all other cases, it is recommended that individual tank data be entered into the TANKS program (or other similar software), and the emission results for individual tanks be reported.
2. Each tank should be modeled based on the vapor pressure and composition of the material stored in the tank. The TANKS model has default vapor pressure and composition for certain streams; however, these defaults should not be used unless the default parameters have been specifically evaluated and determined to adequately represent the stored liquid. For example, it is possible that a specific gasoline default stream (where different defaults are available for different Reid vapor pressures) will match well the gasoline stored in certain tanks, but it is less likely that the single crude oil default in TANKS will match the crude oil stored in the crude oil tanks.

3. For the internal floating roof tank, the external floating roof tank, and the domed external floating roof tank, the tank fittings should be selected to represent the specific characteristics of each individual storage tank. You should not use the "default" fitting settings when using TANKS v4.09D, particularly for the type and control for guide poles. The default fitting settings should be reviewed and revised to properly account for the number and control status of the specific tank's fittings.
4. The storage tanks should be modeled using monthly parameters, including average monthly measured tank liquid temperatures, when available. In TANKS, selecting the city will set the meteorological data that will be used in the calculations. Even if you select the monthly calculation option, the liquid temperature remains at the annual average. As such, the TANKS program will not adequately account for the monthly variations in emissions. Also, for intermediate process tanks with floating roofs that store liquids that are generally warmer than ambient temperature, TANKS will underestimate the emissions.[1] Therefore, for storage tanks with throughputs that vary significantly with the seasons and floating roof tanks that store warm process fluids, the equations in Chapter 7.1 of AP-42 should be used directly to more accurately estimate the annual emissions.
5. Special calculations should be performed to account for tank roof landings, tank degassing, and tank cleaning, and these estimates should be included in the final annual emissions reported for each tank. The TANKS model does not currently contain algorithms for estimating emissions from tank roof landings. These emissions should be estimated separately for each landing event using the methods provided in Section 7.1.3.2.2 of the 2006 update of Section 7.1 of AP-42. Tank degassing emissions can be calculated using the liquid heal method described in Section 11, *Startup and Shutdown*, of this Refinery Emissions Protocol document.
6. Emission estimates should be calculated and reported for individual pollutants. The TANKS program typically provides total hydrocarbon emission estimates, but can also provide estimates for individual pollutants.
7. Maximum hourly average emission rates for each tank should be calculated based on the reasonable worst-case (high emission rate) situation for a given storage tank, which will generally correspond to the emissions while the tank is actively filling. Factors that should be considered are the volatility of the material stored, the filling rate, the bulk liquid and ambient air temperature, and the wind speed. Higher emissions will occur when these parameters are at their highest values. Note that the TANKS program is primarily designed to estimate long-term, annual average emissions and cannot be easily manipulated to estimate the maximum hourly emission rate. Also note that the maximum hourly average emission rate should not be based on the tank's degassing emission estimate.

For fixed-roof tanks that are vented to a control device, but for which flow and composition data are not measured (i.e., data are not available to use Methodology Rank 1for storage tanks), the pre-control emissions from the fixed-roof storage tanks can be estimated using the appropriate equations for fixed-roof storage tanks presented in Chapter 7.1 of AP-42 (U.S. EPA, 1995a). The post-control device emissions are then estimated from the pre-control emission estimates and the efficiency of the control device using **Equation 3-1**.

[1] The TANKS program includes an algorithm for calculating emissions from heated tanks, but it is only applicable to tanks with horizontal or vertical fixed roofs.

$$E_i = E_{unc,i} \times \left(1 - \frac{CD_{eff}}{100\%}\right) \quad \text{(Eq. 3-1)}$$

where:

E_i = Emission rate of pollutant "i" (tons/yr)
$E_{unc,i}$ = Projected emission rate of pollutant "i" assuming storage tank or unit does not have an add-on control device (tons/yr)
$CD_{eff,i}$ = Control device efficiency F_{eff} for pollutant "i" (weight percent). See **Table 3-2** for default control efficiencies for various control devices.

Table 3-2. Default Control Efficiencies for Different VOC Control Devices

Control Device	Pollutants	Control Device Efficiency
Refrigerated Condenser	All VOC constituents	Variable based on constituents and operating temperature[a]
Thermal oxidizer	All VOC constituents	98%
Catalytic oxidizer	All VOC constituents	98%
Carbon adsorption	VOC constituents other than those listed in table note b	95%
	Constituents listed in table note b	0%

[a] The control efficiency of a condenser should be determined based on the operating conditions of the condenser and composition of the vent stream following the methods *Methods for Estimating Air Emissions from Chemical Manufacturing Facilities* (EIIP, 2007, Section 4.2.3)

[b] The following compounds have extremely low adsorptive capacities on activated carbon: acetaldehyde, acetonitrile, acetylene, bromomethane, chloroethane, chloromethane, ethylene, formaldehyde, methanol, and vinyl chloride.

3.3 Methodology Rank 3 for Storage Tanks

Refinery owners and operators are expected to have tank-specific information and should use Methodology Rank 2 for storage tanks; however, state and local agency staff may not have access to this information. When tank-specific information is not available, default emissions factors can be used. The emissions factors presented in this section are primarily based on model external floating roof tanks for various petroleum refinery liquids (e.g., crude oil, gasoline, jet fuel). These default emissions factors required assumptions regarding the typical fitting controls and the average composition of crude oil, gasoline, and other products at the refinery. The heavy distillate and aromatics emissions factors were developed based on the permit applications, which were generally based on TANKS modeling. The reported emissions, which were normalized by production capacity, were then averaged across a limited number of storage tanks to develop the default emissions factors that are provided in **Table 3-3**. Additional details regarding the assumptions used to develop these emissions factors are found in two publications (i.e., RTI, 2002; Lucas, 2007). These emission factors typically provide emission estimates within a factor of 2 of tank-specific modeling approach, but will be less accurate if most of the tanks are internal floating roof tanks and/or external floating roof tanks with domed covers.

Table 3-3. Default Emissions Factors for Petroleum Refinery Storage Tanks

CAS Number	Chemical Name	Emissions Factors for Petroleum Liquid Storage Tanks (lb/MMbbl)				
		Crude Oil	Gasoline and Other Light Distillates	Diesel Fuel and Other Middle Distillates	Asphalt, Lube Oils, and Heavy Distillates	Aromatics
71432	Benzene	10.	70.	54	40	[a]
108883	Toluene	7.5	180	100	29	[a]
1330207	Xylene	6.2	140	70	26	[a]
100414	Ethylbenzene	1.6	31	18	5.3	
100425	Styrene	0	66	0		
98828	Cumene	0.5	15	10	0.4	
95636	1,2,4-Trimethyl benzene	0.7	0	0	5.9	
1634044	Methyl tertiary-butyl ether	0	310	0	0	
106990	1,3 Butadiene	0	1.8	0	0	
110543	Hexane	84	420	480	13	
540841	2,2,4-Trimethylpentane	3.4	140	22	0	
78933	Methyl ethyl ketone		0.3	0.33	0	
108101	Methyl isobutyl ketone		320	320	0	
67561	Methanol		3.8	3.8	0	
108952	Phenol	0.9	0.9	0.67	0	
1319773	Cresol	0.6	13	0.19	0	
91203	Naphthalene	0.6	7.6	4	5.77	
91576	2-Methyl naphthalene		3.5	3.5	0	
92524	Biphenyl	0.2	0.17	0	0.7	
POM	Polycyclic organic matter/ polynuclear aromatics/PAH		0	0	17	
120127	Anthracene		0.24	0.24	0	
218019	Chrysene		0.21	0.21	0	
86737	Fluorene		0.36	0.36	0	
85018	Phenanthrene		1.5	1.5	0	
129000	Pyrene		0.39	0.39	0	
	Sum VOC	1,350	8,800	5,300	120	15,000

Note: lb/MMbbl = pounds per million barrels
[a] Use "Sum VOC" emissions factor and apply it to the production of each aromatic produced.

When facility-specific production data are available, these data should be used with the default emissions factors to estimate emissions. When these data are not available, crude distillation capacity and production capacities, as presented in the *Refinery Capacity Report 2009* (EIA, 2009), can be used to estimate these production rates as follows:

- The crude oil processing rate can be assumed to be the atmospheric crude oil distillation capacity. If a refinery does not have atmospheric crude distillation columns, then the sum of the vacuum distillation and coking capacities can be used as the crude oil processing rate.

- The aromatics production capacity is provided in the *Refinery Capacity Report 2009* (EIA, 2009); however, the specific aromatics produced cannot be determined. As a default assumption, equal production of benzene, toluene, and xylenes can be assumed.
- Heavy distillate production can be estimated as the sum of lube oil production, asphalt production, and coke production.
- Light distillate production can be estimated as 60% of the difference of the crude oil processing rate minus the aromatics and heavy distillate production (0.6 × [Crude − Aromatics − Heavy]).
- Middle distillate production can be estimated as 40% of the difference of the crude oil processing rate minus the aromatics and heavy distillate production (0.4 × [Crude − Aromatics − Heavy]).

4. Stationary Combustion Sources

Petroleum refineries include numerous stationary combustion sources, the most common of which are process heaters, boilers, internal combustion engines, and combustion turbines. These combustion sources are vent (point) sources that occur throughout the process area of the refinery. The size of the vent stack varies with the size of the source (typically measured in terms of the rate that fuel is burned). Process heaters are used to indirectly preheat feedstock or process fluids for a given process, to reheat intermediates of a process, or to heat distillation columns (the latter are often termed "reboilers"). These emission sources are typically localized at or near the process requiring the heater (or reboiler). Boilers are used to generate steam for various refinery operations and to raise the temperature of feedstocks and process streams. The primary fuel for nearly all petroleum refinery process heaters and boilers is refinery fuel gas, which is a mixture of uncondensed overhead gases from distillation columns (also referred to as "still gas") and natural gas. Still gas is produced from a variety of refinery process units, including atmospheric crude oil distillation units, fluid catalytic cracking units, catalytic reforming units, fluid and delayed coking units, and hydrocracking units. Other fuels, such as natural gas only, fuel oil, and residual oil, are also used. Internal combustion engines have a variety of uses, including powering fire suppression systems, and supplying emergency back-up power. Internal combustion engines generally combust natural gas, gasoline, or diesel fuel oil. Combustion turbines are used for cogeneration, and typically combust natural gas or refinery fuel gas.

In addition to refinery fuel gas, some petroleum refineries also produce petroleum coke. The petroleum coke produced by a coking unit is generally referred to as green petroleum coke or fuel grade coke. Some refineries may use green petroleum coke as fuel in boilers to produce steam or electricity. Green petroleum coke is expected to contain relatively high concentrations of sulfur and metals when compared with other fuels used at a refinery. Green petroleum coke may be purified in a calcining unit for use in industrial applications, most often as anode material in the manufacture of aluminum. Consequently, calcined petroleum coke is often referred to as anode grade coke. Emissions from coke calcining are described in more detail in Section 5.6.3, *Coke Calcining*, of this Refinery Emissions Protocol document. Alternatively, green petroleum coke may be gasified with steam and either air or oxygen (O_2) to form a low (using air) to medium (using O_2) heating value synthesis gas (or syngas) for subsequent use as a fuel gas. There are no direct emissions from the coke gasification process; emissions from the combustion of syngas can be estimated using the methods provided in this section.

Table 4-1 summarizes the hierarchy of emission estimation methods for stationary combustion sources. Each refinery may use a combination of different methods, such as Methodology Rank 1 for criteria pollutants such as sulfur dioxide (SO_2) and NO_x, and Methodology Rank 2 or 3 to estimate emissions of organic or metal compounds. Different methodologies may be used for each combustion source for each pollutant based on the type of monitoring data available for each source (e.g., Methodology Rank 1 may be used for estimating NO_x emissions for one combustion source for which continuous emission monitoring systems (CEMS) data are available, while Methodology Rank 4 may be used to estimate NO_x emissions for another combustion source at the same facility where no CEMS data or emission test data are available). It is also important to note that the selection of Methodology Rank 3A or Methodology Rank 3B will depend on factors such as whether the pollutant being estimated has a reduced form (e.g., reduced sulfur compounds form SO_2 when oxidized) that can be continuously monitored, the variability of the combustion source, and the date of the most recent stack test. The remainder of this section provides additional detail and guidance regarding the implementation of these methods.

A complete inventory for combustion sources will include emission estimates for PM, SO_2, NO_x, VOCs,[1] and carbon monoxide (CO). Depending on the fuel combusted, a complete inventory will also include

[1] Total hydrocarbon [THC] may be estimated as a surrogate for VOC.

emission estimates for hydrogen sulfide; metals, including but not limited to arsenic, chromium, mercury, lead, and selenium; organic compounds, including but not limited to benzene, formaldehyde, 1,3-butadiene, and naphthalene and other polycyclic organic matter; and dioxins and furans. It is important to note that this list is not exhaustive; if there is evidence that a combustion source at a refinery emits a pollutant (e.g., site-specific emission test data for an additional compound or a relevant emission factor for an additional compound), an emission estimate should be included in a complete inventory, even if that pollutant is not specifically identified in this document.

Table 4-1. Summary of Typical Hierarchy of Stationary Combustion Source Emission Estimates

Rank	Measurement Method	Additional Data Needed
1	Direct measurement (continuous emission monitoring systems [CEMS]) for both flow rate and gas composition	▪ Pressure, temperature, and moisture content (depending on the monitoring system)
2	Direct measurement (CEMS) for gas composition Use of F factors	▪ Fuel usage ▪ Heat content of fuel (depending on units of source-specific emission factors)
3A	Fuel analysis/mass balance	▪ Fuel usage ▪ Assumed destruction efficiency
3B	Source-specific stack testing to calculate source-specific emission correlations or factors	▪ Fuel usage ▪ Heat content of fuel (depending on units of source-specific emission factors)
4	Default emission factors	▪ Fuel usage

There are many sources that describe emission methodologies for combustion sources, particularly boilers and internal combustion sources, including Chapter 2 in the *Emission Inventory Improvement Program Technical Report Series* (ERG, 2001), *2008 Emissions Inventory Guidelines* (TCEQ, 2009), and *A Customized Approach for Quantifying Emissions for the Electric Power Generation Sector in Mexico* (The United States–Mexico Foundation for Science, 2008). These documents include many examples and sample calculations for liquid and solid fuels and should be consulted for more information if needed. In addition, the American Petroleum Institute (API) has posted a *Compendium of Greenhouse Gas Emissions Methodologies* for the Oil and Natural Gas Industry on their Web site. While this document is focused on estimating GHG emissions, it contains information on how to estimate combustion gas flows and how to estimate emissions from various types of combustion sources, and it includes useful conversion factor discussions and examples.

4.1 Methodology Rank 1 for Stationary Combustion Sources

Many stationary combustion sources will have a CEMS for NO_x and/or SO_2. A CEMS is a comprehensive unit that continually determines gaseous or PM concentrations or emission rates using pollutant analyzer measurements and a conversion equation, graph, or computer program to produce results in the desired units. A CEMS that includes a flow rate monitor, which is needed to determine mass emission rates, such as those needed for an emission inventory, is also referred to as a continuous emission rate monitoring system (CERMS). The CEMS or CERMS continually determines the flow rate of the exhaust gas, analyzes the composition or specific pollutant concentration in the exhaust gas, and records the results. There are two main types of CEMS: in-situ and extractive. An in-situ CEMS measures and analyzes the emissions directly in a stack. There is less sample loss associated with the in-situ CEMS compared to the extractive CEMS because the sample lines of an extractive system can leak, freeze, or clog, or pollutants can be lost because of adsorption, scrubbing effects, or condensation. In an extractive CEMS, the sample gas is extracted from the gas stream and transported to a gas analyzer for the measurement of the contaminant concentration. Because an extractive CEMS is located outside the stack, the sampling

instruments are not affected by stack conditions, maintenance and replacement are generally simpler, and the cost is lower than with an in-situ CEMS, although extra costs are incurred for the sampling and conditioning system for an extractive CEMS (Levelton Consultants, 2005).

The pollutant concentration recorded by a CEMS is generally on a concentration basis, such as parts per million. The CEMS may also include a diluent monitor (e.g., O_2) for correcting the concentrations to a fixed excess air concentration. For in-situ CEMS, these measurements are made at stack conditions so that the concentrations would be determined on a "wet basis." That is, the concentrations are based on the total amount of gas, including water vapor. For extractive CEMS, the gas is often conditioned to remove water vapor before analysis, so the concentrations are commonly determined on a "dry basis." Gas flow measurements are made at stack conditions, so the flow rate will be in terms of actual gas volume on a wet basis. If the gas composition is determined on a dry basis, then a moisture content measurement is needed to convert the flow rate to a dry basis (or convert the composition to a wet basis) so that both measurements are on the same basis, and many gas flow monitors contain temperature and pressure monitors to allow conversion of the flow to standard conditions for this purpose. It is important to note that care must be taken to ensure that the gas and flow measurements are made on the same basis and in the same terms as the permitted limits, if applicable, or that appropriate ancillary measurements are made to perform the necessary unit conversions.

The following general equation (Equation 4-1) is used for determining a mass emission rate from CEMS:

$$E_i = \sum_{n=1}^{N}\left((Q)_n \times \left[1-(f_{H20})_n\right] \times \frac{(C_i)_n}{100\%} \times \frac{MW_i}{MVC} \times \left(\frac{T_o}{T_n}\right) \times \left(\frac{P_n}{P_o}\right) \times M_N \times K \right) \qquad \text{(Eq. 4-1)}$$

where:

E_i = Emission rate of pollutant "i" (tons per year [tons/yr]).
N = Number of measurement periods per year (e.g., for hourly measurements, N = 8,760).
n = Index for measurement period.
$(Q)_n$ = Volumetric flow rate for measurement period "*n*" (actual cubic feet per minute [acfm]). If the flow rate meter automatically corrects for temperature and pressure, then replace "$T_o \div T_n \times P_n \div P_o$" with "1." If the pollutant concentration is determined on a dry basis and the flow rate meter automatically corrects for moisture content, replace the term $[1-(f_{H20})_n]$ with 1.
$(f_{H2O})_n$ = Moisture content of exhaust gas during measurement period "*n*," volumetric basis (cubic feet water per cubic feet exhaust gas).
$(C_i)_n$ = Concentration of pollutant "i" in the exhaust gas for measurement period "*n*" (volume %, dry basis). If the pollutant concentration is determined on a wet basis, then replace the term $[1-(f_{H20})_n]$ with 1.
MW_i = Molecular weight of pollutant "i" (kilogram per kilogram mole [kg/kg-mol]).
MVC = Molar volume conversion factor = 849.5 standard cubic feet per kilogram mole (scf/kg-mol) at 68°F (528°R) and 1 atmosphere (atm).
T_o = Temperature at "standard conditions" (528 °R).
T_n = Temperature at which flow is measured during measurement period "n" (°R).
P_n = Average pressure at which flow is measured during measurement period "n" (atm).
P_o = Average pressure at "standard conditions" (1 atm).
M_N = Minutes per measurement period (minutes per measurement period "n"). This term can be calculated by dividing 525,600 minutes per year (min/yr) by the number of measurement periods per year ("N").
K = Conversion factor = 2.2046/2,000 (tons per kilogram [tons/kg] = 0.0011023 tons/kg.

A CEMS records multiple measurements per hour; the frequency depends on the pollutant being measured and the type of CEMS. For example, a CEMS monitoring benzene concentration using gas chromatography may only sample and record a measurement every 15 minutes, while a CEMS monitoring SO_2 concentration may record a measurement every minute. These individual measurements can be used to calculate annual emissions in two ways. The most common method is for the CEMS to average the measurements within each hour and develop 8,760 hourly average concentrations and flow rates that can be summed. Example 4-1 demonstrates the calculation of NO_x emissions for 1 hour for a combustion unit firing refinery fuel gas based on an hourly average concentration and flow rate. This method is best suited for measurements that are fairly consistent and stable over the course of an hour. The other method is to determine the emission rate for each recorded measurement based on the concentration and flow rate for that measurement. In other words, if the CEMS records measurements every minute, then the emission rate is determined per minute and hourly emissions are determined by summing the 60 applicable emission rates; if the CEMS records measurements every 5 minutes, then the emission rate is determined for each 5-minute interval and hourly emissions are determined by summing the 12 applicable emission rates. This method may be more accurate than hourly averages if the combustion source's flow rate varies significantly within an hour.

Example 4-1: Calculation of NO_x Emissions Using a CEMS

The following example shows the calculation for 1 hour (60 minutes); the total emissions during any period (i.e., day, month, quarter, or year) may be calculated as the sum of the hourly emissions determined by the CEMS. In terms of Equation 4-1, "i" is NO_x and the index for the period in this example is 1, so the result "E" is in tons per hour.

Calculate hourly NO_X emissions for a 150 million British thermal units per hour (MMBtu/hr) unit burning refinery fuel gas given that the following data have been collected:

- The hourly average NO_x concentration calculated by the CEMS for this hour is 60 parts per million by volume (ppmv), wet basis
- The hourly average flow rate calculated by the CEMS for this hour is 500,000 acfm, wet basis
- The unit operated at standard conditions for the full hour.

Equation 4-1 should be used to calculate the hourly emissions:

$$E_{NOx} = \sum_{n=1}^{N}\left((Q)_n \times \left[1-(f_{H20})_n\right] \times \frac{(C_{NOx})_n}{100\%} \times \frac{MW_{NOx}}{MVC} \times \frac{T_o}{T_n} \times \frac{P_n}{P_o} \times M_N \times K \right)$$

$$= 500{,}000 \times 1 \times (60 \div 1{,}000{,}000) \times 46.01 \div 849.5 \times 1 \times 1 \times 60 \times 0.0011023$$
$$= 0.1075 \text{ tons per hour (tons/hr).}$$

Rounded to two significant figures, the hourly emissions are 0.11 tons/hr.

If the combustion source did not operate the entire hour, multiply the hourly emissions by the fraction of the hour that the unit operated (e.g., if the unit operated for 30 minutes, then emissions for this hour would be 0.1075 tons/hr × 0.5 = 0.054 tons/hr).

If the combustion source operated steadily and continuously for an entire year and the emission rate remained perfectly constant over that year, annual emissions would be 0.1075 tons/hr × 8,760 hours per year (hr/yr) = 940 tons/yr.

4.2 Methodology Rank 2 for Stationary Combustion Sources

Because the emission standards for stationary combustion sources are often provided on a concentration basis or on a mass per heating–value basis, many stationary combustion sources will have a CEMS for pollutant concentrations, but may not directly measure exhaust gas flow. In these cases, fairly accurate exhaust gas flow rates can be calculated from the refinery fuel gas composition and fuel flow measurements. This method is commonly referred to as the "F factor" method, and procedures for conducting a fuel analysis and calculating estimated emissions are described in EPA Method 19 (40 CFR Part 60, Appendix A-7).

EPA Method 19 includes many equations that can be used to calculate emissions depending on moisture measurements and whether pollutant concentrations and O_2 or CO_2 content are measured on a wet or dry basis, and each equation uses one of three different types of F factors. The calculation of the different F factors is described in Section 12.3.2 of Method 19. In lieu of this calculation, Table 19-2 of EPA Method 19 includes default F factors for some common types of fuel that could be used; however, F factors for refinery fuel gas are not included in Table 19-2.

Refinery fuel gas generally includes many different components; therefore, one equation that can be used to calculate the F factor in this situation is an adapted version of Equation 19-16 in EPA Method 19 for multiple fuels. In Equation 4-2, the dry F factor, F_d, is calculated assuming both the pollutant concentration and the O_2 content are measured on a dry basis:

$$F_d = K \times \left(\frac{\sum_{i=1}^{n} \left(X_i \times MEV_i \right)}{\sum_{i=1}^{n} \left(X_i \times MHC_i \right)} \right) \qquad \text{(Eq. 4-2)}$$

where:

F_d = Volume of combustion components resulting from stoichiometric combustion per unit of heat content (dry standard cubic feet per million British thermal unit [dscf/MMBtu])
K = Conversion factor, 10^6 (Btu/MMBtu)
n = Number of fuels or fuel components
i = Index for fuels or fuel components
X_i = Mole or volume fraction of each component in the refinery fuel gas
MEV_i = Molar exhaust volume (dry standard cubic feet per mole [dscf/mol])
MHC_i = Molar heat content (British thermal units per mole [Btu/mol])

Table 4-2 includes values for the molar exhaust volume and molar heat content for common constituents of refinery fuel gas. It is important to note that these calculations are based on the higher heating value of the fuel gas (referred to as gross calorific value in EPA Method 19).

Table 4-2. Molar Exhaust Volumes and Molar Heat Content of Refinery Fuel Gas Constituents

Constituent	MEV[a] (dscf/mol)	MHC[b] (Btu/mol)
Methane (CH_4)	7.28	842
Ethane (C_2H_6)	12.94	1,475
Hydrogen (H_2)	1.61	269
Ethene (C_2H_4)	11.34	1,335

(continued)

Table 4-2. Molar Exhaust Volumes and Molar Heat Content of Refinery Fuel Gas Constituents (continued)

Constituent	MEV[a] (dscf/g-mol)	MHC[b] (Btu/g-mol)
Propane (C_3H_8)	18.61	2,100
Propene (C_3H_6)	17.01	1,947
Butane (C_4H_{10})	24.28	2,717
Butene (C_4H_8)	22.67	2,558
Inerts	0.85	0

[a] MEV = molar exhaust volume (dry standard cubic feet per gram-mole [dscf/g-mol])
[b] MHC = molar heat content (Btu per gram-mole [Btu/g-mol]); higher heating value basis

The F factor can be used to calculate emissions in one of two ways. In the first option, the F factor, the amount of fuel combusted, and the heat content of the fuel can be used to calculate the volumetric flow rate of the exhaust gas, $(Q)_n$, using the following equation.

$$Q_n = F_d \times Q_f \times HHV \times \frac{20.9}{(20.9 - \%O_{2d})} \qquad \text{(Eq. 4-3)}$$

where:

Q_n = Volumetric flow rate for measurement period "n" (dry standard cubic feet per minute [dscfm])
F_d = Volume of combustion components per unit of heat content (dscf/MMBtu)
Q_f = Volumetric flow rate of fuel (dscfm)
HHV = Higher heating value of fuel (million British thermal units per standard cubic foot [MMBtu/scf])
$\%O_{2d}$ = Concentration of O_2 on a dry basis (percent)

Once the volumetric flow rate is known, emissions can be calculated using Equation 4-1 as in Methodology Rank 1 for stationary combustion sources. It is important to note that when using the F factor method as indicated here, the exhaust gas flow rate will be in units of dry standard cubic feet per minute, so the temperature and pressure correction terms are not needed. A moisture correction term is not needed when the concentration measurement is also made on a dry basis. If the concentration measurements are made on a wet basis, then they must be corrected to a dry basis by dividing by the $[1-(f_{H20})_n]$ term.

In the second option, the F factor can be used to calculate an emission factor (Equation 4-4) that can then be multiplied by the higher heating value of the fuel to estimate emissions (Equation 4-5).

$$EF_i = C_d F_d \frac{20.9}{(20.9 - \%O_{2d})} \qquad \text{(Eq. 4-4)}$$

where:

EF_i = Emission rate of pollutant (pounds per million British thermal unit [lb/MMBtu])
C_d = Pollutant concentration, dry basis (pounds per standard cubic foot [lb/dscf])
F_d = Volume of combustion components per unit of heat content (dscf/MMBtu)
$\%O_{2d}$ = Concentration of O_2 on a dry basis (percent)

$$E_i = EF_i \times (60 \times Q_f) \times HHV \qquad \text{(Eq. 4-5)}$$

where:

E_i = Emissions of pollutant "i" (pounds per hour [lb/hr])
EF_i = Emission rate of pollutant (lb/MMBtu)
Q_f = Volumetric flow rate of fuel (dscfm)
60 = Conversion factor, minutes per hour
HHV = Higher heating value of fuel (MMBtu/scf)

Example 4-2 demonstrates the calculation of an F factor based on a fuel analysis for refinery fuel gas. Examples 4-3 and 4-4 demonstrate the first and second options, respectively, to estimate emissions using the F factor. As previously mentioned, if the result of a calculation is an hourly emission estimate, then the calculation process should be repeated for each hour in the year, or 8,760 times. For example, the hourly pollutant and O_2 concentrations from the CEMS should be used in Equation 4-4 to calculate an emission factor for each hour in the year. That emission factor and the hourly measurements of the fuel flow rate should then be used in Equation 4-5 to determine the hourly emissions for each hour in the year. The sum of all of those hourly emission estimates is the annual emission estimate.

Example 4-2: Calculation of Fuel-Specific F Factor

The CEMS measures SO_2 and O_2 content on a dry basis, so in lieu of using a default F factor, the facility can use fuel analysis results and Equation 4-2 to calculate an F_d factor (scf/MMBtu). The F_d factor is calculated at standard conditions of 20°C (68°F) and 29.92 inches of mercury.

The fuel analysis revealed the following mole fractions:

Methane	0.44	Propene	0.03
Ethane	0.04	Butane	0.17
Hydrogen	0.06	Butene	0.01
Ethene	0.01	Inerts	0.04
Propane	0.2		

Equation 4-2 is used to calculate F_d as follows:

$$F_d = K \times [(X_{CH_4} \times MEV_{CH_4}) + (X_{C_2H_6} \times MEV_{C_2H_6}) + (X_{H_2} \times MEV_{H_2}) + (X_{C_2H_4} \times MEV_{C_2H_4}) + (X_{C_3H_8} \times MEV_{C_3H_8}) + (X_{C_3H_6} \times MEV_{C_3H_6}) + (X_{C_4H_{10}} \times MEV_{C_4H_{10}}) + (X_{C_4H_8} \times MEV_{C_4H_8}) + (X_{inerts} \times MEV_{inerts})] \div [(X_{CH_4} \times MHC_{CH_4}) + (X_{C_2H_6} \times MHC_{C_2H_6}) + (X_{H_2} \times MHC_{H_2}) + (X_{C_2H_4} \times MHC_{C_2H_4}) + (X_{C_3H_8} \times MHC_{C_3H_8}) + (X_{C_3H_6} \times MHC_{C_3H_6}) + (X_{C_4H_{10}} \times MHC_{C_4H_{10}}) + (X_{C_4H_8} \times MHC_{C_4H_8}) + (X_{inerts} \times MHC_{inerts})]$$

F_d = $10^6 \times [(0.44 \times 7.28) + (0.04 \times 12.94) + (0.06 \times 1.61) + (0.01 \times 11.34) + (0.2 \times 18.61) + (0.03 \times 17.01) + (0.17 \times 24.28) + (0.01 \times 22.67) + (0.04 \times 0.85)] \div [(0.44 \times 842) + (0.04 \times 1475) + (0.06 \times 269) + (0.01 \times 1335) + (0.2 \times 2100) + (0.03 \times 1947) + (0.17 \times 2717) + (0.01 \times 2558) + (0.04 \times 0)]$
= $10^6 \times 12.55 \div 1425$
= 8,809 dscf/MMBtu

Example 4-3: Calculation of Exhaust Flow Rate from F Factor

From Example 4-2, the F factor is 8,809 dscf/MMBtu. The measured SO_2 concentration is 20 ppmv (dry basis), the measured O_2 concentration is 6% (dry basis), the higher heating value is 1,300 Btu/scf, and the fuel flow rate is 500 dscfm. Equation 4-3 should be used to calculate the exhaust flow rate from F factor as follows:

$$Q_n = F_d \times Q_f \times HHV \times \frac{20.9}{(20.9 - \%O_{2d})}$$

$$Q_n = (8{,}809) \times (500) \times (1{,}300 \div 10^6 \text{ [Btu/MMBtu]}) \times (20.9 \div (20.9 - 6))$$

$$Q_n = 8{,}031 \text{ dscfm}$$

Use this value of Q_n in Equation 4-1 without the temperature, pressure, and moisture correction terms to estimate hourly emissions as follows:

$$E_{SO_2} = (Q)_n \times \left[1 - (f_{H20})_n\right] \times \frac{(C_i)_n}{100\%} \times \frac{MW_i}{MVC} \times M_N \times K$$

$$E_{SO_2} = 8{,}031 \times 1 \times (20 \div 1{,}000{,}000) \times 64.06 \div 849.5 \times 60 \times 2.2046 = 1.6 \text{ lb/hr}$$

Example 4-4: Calculation of Emissions Factor from F Factor

Given the same measurements as Example 4-3, calculate hourly SO_2 emissions.

First, the following equation should be used to convert the concentration to the correct units (from Table 19-1 of EPA Method 19, multiply the SO_2 concentration in ppm by 1.660×10^{-7} to convert to lb/scf [see also Equation 4-7 of this section]):

$$C_d = 20 \text{ ppm} \times (1.660 \times 10^{-7}) \text{ lb/scf/ppm}$$

$$C_d = 3.322 \times 10^{-6} \text{ lb/scf}$$

Second, Equation 4-4 should be used to calculate the emission factor:

$$EF_{SO_2} = C_d F_d \frac{20.9}{(20.9 - \%O_{2d})}$$

$$EF_{SO_2} = (3.322 \times 10^{-6}) \times (8{,}809) \times (20.9 \div (20.9 - 6))$$

$$EF_{SO_2} = 0.041 \text{ lb/MMBtu}$$

Finally, Equation 4-5 should be used to calculate the hourly emissions (the fuel flow rate is 500 dscfm, or 30,000 dscf/hr [500 dscfm × 60 minutes per hour (min/hr)])

$$E_{SO_2} = EF_{SO_2} \times Q_f \times HHV$$

$$E_{SO_2} = (0.041) \times (30{,}000) \times (1{,}300 \div 10^6 \text{ [Btu/MMBtu]})$$

$$E_{SO_2} = 1.6 \text{ lb/hr}$$

If the combustion source operated steadily and continuously for an entire year and the emission rate remained perfectly constant over that year, then the annual emissions would be 1.6 lb/hr × 8,760 hr/yr ÷ 2,000 lb/ton = 7.0 tons/yr.

4.3 Methodology Rank 3A for Stationary Combustion Sources

Fuel analysis can be used to predict emissions of pollutants such as SO_2 by examining the compounds in the fuel being combusted. Given a known concentration of a compound, either a pollutant or pollutant precursor (e.g., hydrogen sulfide [H_2S] or other reduced sulfur compounds for purposes of estimating SO_2 emissions), emissions of the pollutant can be calculated by assuming that all of that compound is emitted (e.g., all of the reduced sulfur is oxidized to SO_2). Alternatively, if some of the compound is not combusted (i.e., is in a different physical or chemical state such as ash or unburned hydrocarbons), then based on the laws of mass conservation, less than 100% of the pollutant is emitted as air emissions (ERG, 2001). In this case, it may be possible to determine the emissions actually resulting from combustion by considering the uncombusted compounds in a mass balance analysis.

As mentioned in the introduction to Section 4, Methodology Rank 3A for stationary combustion sources is considered a more accurate method of emission estimation than Methodology Rank 3B for stationary combustion sources for certain pollutants, namely SO_2, particularly if the concentration of the compound of interest in the fuel and the fuel flow rate are continuously measured. This may also be the case if the available source tests are not recent or if the combustion unit's operation varies significantly enough that there are concerns about the accuracy of applying an emission factor developed at one set of operating conditions. For example, a test of NO_x emissions from a process heater performed at high capacity may not apply when the process heater is firing at a lower rate. As the heater firing rate decreases, the operator increases the oxygen content to ensure stable operation, and this increase in oxygen content may lead to higher concentrations of NO_x.

Equation 4-6 is a general equation used to determine a mass emission estimate from fuel analysis data for gaseous fuels (for fuel analysis of liquid and solid fuels, see the documents referenced in the introduction to Section 4).

$$E_i = (Q_f)(C_f)\left(\frac{MW_i}{MW_f}\right) \qquad \text{(Eq. 4-6)}$$

where (assuming gaseous fuel):

E_i = Emission estimate of pollutant "i" (lb/hr)
Q_f = Fuel flow rate (scf/hr)
C_f = Content of pollutant in fuel (lb/scf)
MW_i = Molecular weight of pollutant emitted (pounds per pound mole [lb/lb-mol])
MW_f = Molecular weight of pollutant in the fuel (lb/lb-mol)

As previously explained, to calculate yearly emissions, this type of calculation must be repeated for each hour in the year, or 8,760 times. Also, as described in Example 4-1, if the combustion source did not operate for part of an hour, then the emission estimates for that hour should be multiplied by the fraction of the hour that it did operate.

If the compound concentration is measured in parts per million or as a percentage rather than pounds per cubic feet, then Equation 4-7 will be needed. Equation 4-7 provides a methodology for calculating compound-specific conversion factors such as the values shown in Table 19-1 of EPA Method 19 for NO_x and SO_2.

$$C_f = \frac{(C_c)\times(MW_i)}{K \times 385.3} \qquad \text{(Eq. 4-7)}$$

where:

C_f = Content of pollutant in fuel (lb/scf)
C_c = Volumetric concentration of pollutant in fuel (ppm or percentage)
MW_i = Molecular weight of pollutant "i" emitted (lb/lb-mole)
K = Conversion constant: 10^6 if units of C_c are ppm; 10^2 if units of C_c are a percentage
385.3 = Conversion constant for ideal gases (standard cubic feet per pound mole [scf/lb-mol])

Example 4-5: Fuel Analysis

Calculate hourly emissions from a combustion source burning refinery fuel gas given:

- Fuel flow rate = 500 dscfm, or 30,000 dscf/hr (500 dscfm × 60 min/hr)
- Sulfur content of the fuel = 160 ppm
- Molecular weight of sulfur = 32 lb/lb-mole; molecular weight of SO_2 = 64 lb/lb-mole

Convert the concentration of sulfur in the fuel to the correct units using Equation 4-7:

$$C_f = \frac{(C_c) \times (MW_S)}{K \times 385.3}$$

$$C_f = (160) \times (32) \div (10^6) \div (385.3)$$

$$C_f = 1.33 \times 10^{-5} \text{ lb/scf}$$

Then, use Equation 4-6 to calculate the hourly mass emissions:

$$E_{SO_2} = (Q_f)(C_f)\left(\frac{MW_{SO_2}}{MW_S}\right)$$

$$E_{SO_2} = (30{,}000) \times (1.33 \times 10^{-5}) \times (64) \div (32)$$

$$E_{SO_2} = 0.80 \text{ lbs } SO_2\text{/hr}$$

If the combustion source operated steadily and continuously for an entire year and the emissions rate remained perfectly constant over that year, then the annual emissions would be 0.80 lbs/hr × 8,760 hr/yr ÷ 2,000 pounds per ton (lb/ton) = 3.5 tons/yr.

4.4 Methodology Rank 3B for Stationary Combustion Sources

Source testing can provide useful data for developing site-specific emission correlations or emission factors. Source testing provides a measurement of the emissions at a particular point in time, and most tests are performed at conditions representative of normal operation, in which case the emission measurement can provide an estimate of emissions at similar operating conditions. Emission factors are developed by dividing the emission rate by a process parameter such as fuel usage. It is important to note that this methodology will be less reliable when the unit is operating at conditions other than those tested.

Generally, one source test consisting of three runs is performed at a specific set of conditions, and the results for each run can be averaged to determine an emission factor that is assumed to apply at all heat input rates. Example 4-5 demonstrates a sample emission factor calculation based on one test with three test runs. Section 5.1.2 of this document, *Methodology Ranks 3 and 4 for Catalytic Cracking Units*, also provides details on calculating one emission factor based on three test runs. That section also includes a

detailed description of the ways in which source tests and analyses for PM may need to be handled differently than other pollutants.

Example 4-6: Site-Specific Emissions Factor

During the most recent source test, three test runs were conducted to determine the NO_x emission rate for a 50 MMBtu/hr process heater. The NO_x emissions rate measured during the source tests were 1.92, 1.51, and 1.76 lbs/hr for tests 1, 2, and 3, respectively. The process heater was firing at 95% capacity during all three test runs.

First, calculate the appropriate emissions factor for each individual run, and then average the emissions factors with the following calculations:

- Run 1: Emissions/throughput = 1.92 [lbs/hr] ÷ (50 × 0.95) [MMBtu/hr] = 0.040 lbs NO_x/MMBtu
- Run 2: Emissions/throughput = 1.51 [lbs/hr] ÷ (50 × 0.95) [MMBtu/hr] = 0.032 lbs NO_x/MMBtu
- Run 3: Emissions/throughput = 1.76 [lbs/hr] ÷ (50 × 0.95) [MMBtu/hr] = 0.037 lbs NO_x/MMBtu
- Average: Emissions/throughput = (0.040 + 0.032 + 0.037) ÷ 3 = 0.036 lbs NO_x/MMBtu

A more complex methodology for developing a correlation rather than one emission factor is provided in Section 2.1.2 of *A Customized Approach for Quantifying Emissions for the Electric Power Generation Sector in Mexico* (The United States–Mexico Foundation for Science, 2008). Section 2.1.2 provides a detailed explanation of a methodology for developing a correlation between NO_x emissions and heat input to the source (fuel use multiplied by heat content of fuel) that is based on EPA's *Optional NO_x Emissions Estimation Protocol for Gas-Fired Peaking Units and Oil-Fired Peaking Units* (40 CFR Part 75, Appendix E). This methodology allows the operator to account for lower mass emissions per heat input for lower operating loads. The methodology calls for stack measurements at three load levels, ideally 50%, 75%, and 100% firing rates. The test results at each firing rate are used to calculate an emission factor in units of mass per heat input (or mass per amount of fuel combusted, assuming a constant heat content of fuel). Following the development of this correlation, hourly emissions can be calculated based on hourly measurements of fuel combusted and calculations of the heat content of the fuel (or constant heating value of the fuel). Section 2.1.2 also includes a detailed set of sample calculations in Exhibit 2.1-3 to demonstrate this procedure.

4.5 Methodology Rank 4 for Stationary Combustion Sources

When direct emission monitoring or site-specific emission factors are not available, then default emission factors may be the only way to estimate emissions. The EPA has developed emission factors for various types of combustion sources, which are compiled in AP-42. Emission factors for process heaters, boilers, and other types of external combustion sources are included Chapter 1 of the *Compilation of Air Pollutant Emission Factors*. *Volume 1: Stationary Point and Area Sources*, and emission factors for internal combustion sources (including engines and combustion turbines) are presented in Chapter 3 of this same document (U.S. EPA, 1995a). It is important to note that AP-42 does not include emission factors for all fuels (notably refinery fuel gas and coke). The emission factors in AP-42 are the recommended default emission factors, and AP-42 should be consulted to obtain the appropriate emission factors for criteria pollutants such as SO_2, NO_x, PM, and CO.

In addition, the American Petroleum Institute (API), in conjunction with the Western States Petroleum Association (WSPA), has conducted emission source tests of combustion sources and has compiled

emission factors that may be used for refinery combustion sources if AP-42 does not include an applicable emission factor (Hansell and England, 1998). Separate emission factors were developed for different combustion sources based on the type of source and fuel used. Appendix D presents the full data analysis summary for combustion sources of interest as presented in Hansell and England's Appendices A and B (1998), including the California Air Resources Board (CARB) emission factor rating; the mean, median, maximum, and minimum emission factors; number of tests analyzed; standard deviation; uncertainty; and percent of test run results at or above the detection limit.

The following tables present the recommended emission factors for a variety of metals and organic compounds. The emission factors in these tables are either the applicable emission factors as presented in AP-42 or the mean emission factors compiled by Hansell and England (1998). (Additional details on the rating and quality of these emission factors are located in the original document for AP-42 emission factors and in Appendix D for the emission factors compiled by Hansell and England (1998).) Emission factors for boilers and process heaters using various fuels are presented in **Table 4-3**. Emission factors for reciprocating internal combustion engines using a variety of fuels are presented in **Table 4-4**. Emission factors for combustion turbines using a variety of fuels are presented in **Table 4-5**.

To use any of these emission factors appropriately, the refinery must monitor or keep records of the amount of fuel combusted or the heat input.

It is important to note that the bold italic emission factor values in **Tables 4-3 through 4-5** from Hansell and England (1998) are based on method detection limits and are likely biased high. Additional data are needed to develop accurate emission factors for the compounds that were below the method detection limits (RTI, 2002). The footnotes to **Tables 4-3 through 4-5** explain any differences if a recommended emission factor is derived from another emission factor.

It is also important to note that this document does not include emission factors for refinery combustion sources combusting either green or calcined petroleum coke. In addition, while emissions from the combustion of syngas (gas produced by coke gasification) can be estimated using the methods provided in this section, this document does not include emission factors for syngas as a fuel. Emission factors for these fuels will need to be developed from future emission testing and analysis.

4.5.1 Default Emission Factors for Process Heaters

The emissions from boilers and process heaters were dependent on the fuel type: gas (i.e., natural gas or refinery gas), crude oil/pipeline oil, residual (No. 6) fuel oil, and distillate (No. 2) fuel oil. No distinctions in HAP emission factors were made for criteria pollutant controls, such as selective catalytic reduction (SCR), or selective non-catalytic reduction (SNCR). **Table 4-3** presents a summary of emission factors for boilers and process heaters.

Table 4-3. Summary of Emission Factors for Boilers and Process Heaters Firing Various Fuels

CAS Number	Substance	Emission Factor for Fuel Type [a]			
		External Combustion, Natural Gas/Refinery Gas (lb/MMBtu) [b]	External Combustion, Crude Oil/Pipeline Oil (lb/MMBtu) [b]	External Combustion, Residual Fuel Oil (No. 6 Oil) (lb/MMBtu) [b]	External Combustion, Distillate Fuel Oil (No. 2 Oil) (lb/MMBtu) [i]
83-32-9	Acenaphthene	2.4E-09	1.7E-07	1.4E-07 [f]	--
208-96-8	Acenaphthylene	6.5E-09	2.3E-08	1.7E-09 [f]	--
75-07-0	Acetaldehyde	1.2E-05	1.1E-05	7.0E-06	--
107-02-8	Acrolein	1.7E-05	***3.3E-06***	--	--
120-12-7	Anthracene	4.7E-09	3.7E-08	8.1E-09 [f]	--
7440-36-0	Antimony	5.2E-07	--	3.5E-05 [h]	--
7440-38-2	Arsenic	2.0E-07 [c]	6.7E-06	8.8E-06 [h]	4E-06
7440-39-3	Barium	4.3E-06 [c]	--	1.7E-05 [h]	--
71-43-2	Benzene	2.1E-06 [d]	4.1E-06	1.4E-06 [f]	--
56-55-3	Benzo(a)anthracene	2.2E-08	3.2E-08	2.7E-08 [f]	--
50-32-8	Benzo(a)pyrene	5.7E-08	1.4E-08	***1.4E-09***	--
205-99-2	Benzo(b)fluoranthene	2.7E-08	5.5E-09	9.9E-09 [f, g]	--
192-97-2	Benzo(e)pyrene	--	3.9E-09	***5.8E-09***	--
191-24-2	Benzo(g,h,i)perylene	1.3E-09	1.9E-08	1.5E-08 [f]	--
207-08-9	Benzo(k)fluoranthene	1.7E-08	2.3E-10	9.9E-09 [f, g]	--
7440-41-7	Beryllium	1.3E-07	1.9E-06	1.9E-07 [h]	3E-06
106-99-0	1,3-Butadiene	--	***1.4E-04***	--	--
106-97-8	Butane	2.1E-03 [d]	--	--	--
7440-43-9	Cadmium	1.1E-06 [c]	2.2E-06	2.7E-06 [h]	3E-06
16887-00-6	Chloride	--	--	2.3E-03 [h]	--
67-66-3	Chloroform	--	***6.0E-05***	***3.4E-05***	--

(continued)

Table 4-3. Summary of Emission Factors for Boilers and Process Heaters Firing Various Fuels (continued)

CAS Number	Substance	Emission Factor for Fuel Type [a]			
		External Combustion, Natural Gas/Refinery Gas (lb/MMBtu) [b]	External Combustion, Crude Oil/Pipeline Oil (lb/MMBtu) [b]	External Combustion, Residual Fuel Oil (No. 6 Oil) (lb/MMBtu) [b]	External Combustion, Distillate Fuel Oil (No. 2 Oil) (lb/MMBtu) [i]
91-58-7	2-Chloronaphthalene	--	8.2E-08	***1.5E-10***	--
18540-29-9	Chromium (hexavalent)	2.8E-07 [l]	1.1E-06	1.7E-06 [h]	--
7440-47-3	Chromium (total)	1.4E-06 [c]	8.7E-06	5.6E-06 [h]	3E-06
218-01-9	Chrysene	1.6E-09	7.5E-08	1.6E-08 [f]	--
7440-48-4	Cobalt	8.2E-08 [c]	--	4.0E-05 [h]	--
7440-50-8	Copper	8.3E-07 [c]	9.5E-06	1.2E-05 [h]	6E-06
53-70-3	Dibenz(a,h)anthracene	1.2E-09 [d]	1.2E-08	1.1E-08 [f]	--
25321-22-6	Dichlorobenzene	1.2E-06 [d]	--	--	--
57-97-6	7,12-Dimethylbenz(a) anthracene	***1.6E-08*** [d]	--	--	--
1746-01-6	Dioxin: 4D 2378[j]	--	***3.5E-12***	***4.3E-12***	--
40321-76-4	Dioxin: 5D 12378[j]	--	***1.7E-11***	***2.5E-12***	--
39227-28-6	Dioxin: 6D 123478[j]	--	***1.5E-11***	***2.5E-12***	--
57653-85-7	Dioxin: 6D 123678[j]	--	2.1E-11	2.5E-12	--
19408-74-3	Dioxin: 6D 123789[j]	--	3.3E-11	2.5E-12	--
35822-46-9	Dioxin: 7D 1234678[j]	--	9.3E-11	2.1E-11	--
3268-87-9	Dioxin: 8D[j]	--	3.3E-10	2.1E-11 [f]	--
74-84-0	Ethane	3.0E-03 [d]	--	--	--
100-41-4	Ethylbenzene	1.6E-05	--	4.2E-07 [f]	--
206-44-0	Fluoranthene	2.9E-09 [d]	6.9E-08	3.2E-08 [f]	--
86-73-7	Fluorene	2.7E-09 [d]	2.0E-07	3.0E-08 [f]	--

(continued)

Table 4-3. Summary of Emission Factors for Boilers and Process Heaters Firing Various Fuels (continued)

CAS Number	Substance	Emission Factor for Fuel Type [a]			
		External Combustion, Natural Gas/Refinery Gas (lb/MMBtu) [b]	External Combustion, Crude Oil/Pipeline Oil (lb/MMBtu) [b]	External Combustion, Residual Fuel Oil (No. 6 Oil) (lb/MMBtu) [b]	External Combustion, Distillate Fuel Oil (No. 2 Oil) (lb/MMBtu) [i]
16984-48-8	Fluoride	--	--	2.5E-04 [h]	--
50-00-0	Formaldehyde	7.4E-05 [d]	1.1E-05	2.2E-04 [f]	--
51207-31-9	Furan: 4F 2378[k]	--	6.2E-10	5.5E-12	--
57117-41-6	Furan: 5F 12378[k]	--	***6.0E-11***	***3.1E-12***	--
57117-31-4	Furan: 5F 23478[k]	--	***1.1E-10***	***3.1E-12***	--
70648-26-9	Furan: 6F 123478[k]	--	1.3E-10	2.5E-12	--
57117-44-9	Furan: 6F 123678[k]	--	4.3E-11	1.9E-12	--
72918-21-9	Furan: 6F 123789[k]	--	***3.5E-12***	***2.5E-12***	--
60851-34-5	Furan: 6F 234678[k]	--	6.1E-11	3.7E-12	--
67562-39-4	Furan: 7F 1234678[k]	--	1.4E-10	9.8E-12	--
55673-89-7	Furan: 7F 1234789[k]	--	***8.3E-12***	***3.2E-12***	--
39001-02-0	Furan: 8F[k]	--	7.3E-11	4.9E-11	--
110-54-3	Hexane	1.8E-03 [d]	--	--	--
7783-06-4	Hydrogen sulfide	8.5E-05	--	--	--
193-39-5	Indeno(1,2,3-cd)pyrene	7.1E-08	1.9E-08	1.4E-08 [f]	--
7439-92-1	Lead	4.9E-07 [e]	1.9E-06	1.0E-05 [h]	9E-06
7439-96-5	Manganese	3.7E-07 [c]	1.8E-05	2.0E-05 [h]	6E-06
7439-97-6	Mercury	2.5E-07 [c]	1.0E-05	7.5E-07 [h]	3E-06
56-49-5	3-Methylchloranthrene	***1.8E-09*** [d]	--	--	--
91-57-6	2-Methylnaphthalene	2.4E-08 [d]	2.5E-07	7.4E-08	--
7439-98-7	Molybdenum	1.1E-06 [c]	--	5.2E-06 [h]	--

(continued)

Table 4-3. Summary of Emission Factors for Boilers and Process Heaters Firing Various Fuels (continued)

CAS Number	Substance	Emission Factor for Fuel Type [a]			
		External Combustion, Natural Gas/Refinery Gas (lb/MMBtu) [b]	External Combustion, Crude Oil/Pipeline Oil (lb/MMBtu) [b]	External Combustion, Residual Fuel Oil (No. 6 Oil) (lb/MMBtu) [b]	External Combustion, Distillate Fuel Oil (No. 2 Oil) (lb/MMBtu) [i]
91-20-3	Naphthalene	6.0E-07 [d]	5.5E-06	7.5E-06 [f]	--
7440-02-0	Nickel	2.1E-06 [c]	2.4E-03	5.6E-04 [h]	3E-06
109-66-0	Pentane	2.5E-03	--	--	--
198-55-0	Perylene	--	5.2E-10	***7.4E-10***	--
85-01-8	Phenanthrene	1.7E-08 [d]	1.7E-07	7.0E-08 [f]	--
108-95-2	Phenol	4.0E-06	--	--	--
7723-14-0	Phosphorus	***6.4E-07***	1.8E-04	6.3E-05 [h]	--
74-98-6	Propane	1.6E-03 [d]	--	--	--
115-07-1	Propylene	1.5E-04	***4.4E-05***	--	--
129-00-0	Pyrene	4.9E-09 [d]	1.2E-07	2.8E-08 [f]	--
7782-49-2	Selenium	8.8E-07	7.9E-06	4.5E-06 [h]	1.5E-05
71-55-6	1,1,1-Trichloroethane	--	--	1.6E-06 [f]	--
108-88-3	Toluene	3.3E-06 [d]	3.5E-05	4.1E-05 [f]	--
7440-62-2	Vanadium	2.3E-06 [c]	--	2.1E-04 [h]	--
95-47-6	Xylene (o)	--	--	7.3E-06 [f]	--
1330-20-7	Xylene (total)	2.5E-05	***2.9E-06***	--	--
7440-66-6	Zinc	2.8E-05 [c]	4.2E-04	1.9E-04 [h]	4E-06

(continued)

Table 4-3. Summary of Emission Factors for Boilers and Process Heaters Firing Various Fuels (continued)

Note: lb/MMBtu = pounds per million British thermal units

[a] Bold italic values indicate that all test runs were below detection limit; underlined values indicate that 75% or more of the test runs were below the detection limit.

[b] Source: Hansell and England, 1998, unless otherwise specified.

[c] Source: U.S. EPA, 1995a, AP-42 Section 1.4, Table 1.4-4. Emission factors were provided for natural gas combustion sources. Values converted from lb/10^6 scf to lb/MMBtu by dividing by 1,020 MMBtu/10^6 scf.

[d] Source: U.S. EPA, 1995a, AP-42 Section 1.4, Table 1.4-3. Emission factors were provided for natural gas combustion sources. Values converted from lb/10^6 scf to lb/MMBtu by dividing by 1,020 MMBtu/10^6 scf.

[e] Source: U.S. EPA, 1995a, AP-42 Section 1.4, Table 1.4-2. Emission factors were provided for natural gas combustion sources. Values converted from lb/10^6 scf to lb/MMBtu by dividing by 1,020 MMBtu/10^6 scf.

[f] Source: U.S. EPA, 1995a, AP-42 Section 1.3, Table 1.3-9. Emission factors were provided specifically for residual oil (No. 6 oil) fired boilers. Values converted from lb/10^3 Gal to lb/MMBtu by dividing by 150 MMBtu/10^3 Gal.

[g] Emission factor includes both benzo(b)fluoranthene and benzo(k)fluoranthene.

[h] Source: U.S. EPA, 1995a, AP-42 Section 1.3, Table 1.3-11. Emission factors were provided specifically for residual oil (No. 6 oil) fired boilers. Values converted from lb/10^3 Gal to lb/MMBtu by dividing by 150 MMBtu/10^3 Gal.

[i] Source: U.S. EPA, 1995a, AP-42 Section 1.3, Table 1.3-10. Emission factors were provided specifically for distillate oil-fired boilers. Values converted from lb/10^{12} Btu to lb/MMBtu by dividing by 10^6.

[j] 4D 2378 = 2,3,7,8-Tetrachlorodibenzo-p-dioxin; 5D 12378 = 1,2,3,7,8-Pentachlorodibenzo-p-dioxin; 6D 123478 = 1,2,3,4,7,8-Hexachlorodibenzo-p-dioxin; 6D 123678 = 1,2,3,6,7,8-Hexachlorodibenzo-p-dioxin; 6D 123789 = 1,2,3,7,8,9-Hexachlorodibenzo-p-dioxin; 7D 1234678 = 1,2,3,4,6,7,8-Heptachlorodibenzo-p-dioxin; 8D = Octachlorodibenzo-p-dioxin.

[k] 4F 2378 = 2,3,7,8-Tetrachlorodibenzofuran; 5F 12378 = 1,2,3,7,8-Pentachlorodibenzofuran; 5F 23478 = 2,3,4,7,8-Pentachlorodibenzofuran; 6F 123478 = 1,2,3,4,7,8-Hexachlorodibenzofuran; 6F 123678 = 1,2,3,6,7,8-Hexachlorodibenzofuran; 6F 123789 = 1,2,3,7,8,9-Hexachlorodibenzofuran; 6F 234678 = 2,3,4,6,7,8-Hexachlorodibenzofuran; 7F 1234678 = 1,2,3,4,6,7,8-Heptachlorodibenzofuran; 7F 1234789 = 1,2,3,4,7,8,9-Heptachlorodibenzofuran; 8F = Octachlorodibenzofuran.

[l] Hexavalent chromium was not detected. Twenty percent of the total chromium emission factor is assumed for the hexavalent chromium emission factor. The hexavalent chromium emission factors for gas turbines are between 10 and 15 percent of the total chromium emission factor, and the hexavalent chromium emission factor for boilers firing fuel oil is about 30 percent of the total chromium emission factor (based on detection limits, which are expected to overstate hexavalent chromium emissions), so 20 percent is a conservative (reasonable high-end) estimate for hexavalent chromium emissions from refinery fuel gas.

4.5.2 Default Emission Factor for Internal Combustion Engines

The emissions from reciprocating internal combustion engines were dependent on: (1) the type of fuel used (diesel fuel, or gas [field gas, or natural gas]), (2) the type of engine used (two-stroke versus four-stroke engines), and (3) the fuel-to-air ratio. As shown in **Table 4-4**, high air rates (or lean fuel mixtures) tend to have higher emissions of acetaldehyde and formaldehyde, whereas lean gas mixtures tend to have higher emissions of benzene, toluene, and xylenes.

4.5.3 Default Emission Factors for Combustion Turbines

The emissions from combustion turbines were dependent on (1) the type of fuel used (e.g., distillate fuel oil, or gas [refinery fuel gas, liquefied petroleum gas, or natural gas]), and (2) the presence or absence of duct burners. No distinctions in HAP emission factors were made for criteria pollutant controls, such as selective catalytic reduction (SCR), or carbon monoxide oxidation catalyst. **Table 4-5** presents a summary of emission factors for combustion turbines.

Table 4-4. Summary of Emission Factors for Internal Combustion Engines Firing Various Fuels

CAS Number	Substance	Emission Factor for Engine and Fuel Type					
		Diesel, O_2 < 13% (lb/MMBtu) [a,b]	Diesel, O_2 > 13% (lb/MMBtu) [a,b]	Diesel, O_2 not specified (lb/MMBtu) [c]	Natural Gas/Field Gas, Lean (2-Stroke) (lb/MMBtu) [d]	Natural Gas/Field Gas, Lean (4-Stroke) (lb/MMBtu) [e]	Natural Gas/Field Gas, Rich (4-Stroke) (lb/MMBtu) [j]
83-32-9	Acenaphthene	4.5E-06	1.4E-06	< 1.4E-06 [f]	1.3E-06 [g]	1.3E-06 [h]	-- [i]
208-96-8	Acenaphthylene	9.0E-06	5.1E-06	< 5.1E-06 [f]	3.2E-06 [g]	5.5E-06 [h]	-- [i]
75-07-0	Acetaldehyde	2.4E-05	7.6E-04	7.7E-04	7.8E-03	8.4E-03	2.8E-03
107-02-8	Acrolein	7.6E-06	9.4E-05	< 9.3E-05	7.8E-03	5.1E-03	2.6E-03
120-12-7	Anthracene	1.2E-06	1.9E-06	1.9E-06 [f]	7.2E-07 [g]	2.4E-07 [a,h]	-- [i]
100-52-7	Benzaldehyde	--	9.0E-05	--	--	--	--
71-43-2	Benzene	7.1E-04	8.8E-04	9.3E-04	1.9E-03	4.4E-04	1.6E-03
56-55-3	Benzo(a)anthracene	6.1E-07	1.7E-06	1.7E-06 [f]	3.4E-07 [g]	7.4E-08 [a,h]	-- [i]
50-32-8	Benzo(a)pyrene	2.5E-07	***1.0E-08***	< 1.9E-07 [f]	5.7E-09 [g]	3.4E-08 [a,h]	-- [i]
205-99-2	Benzo(b)fluoranthene	1.1E-06	1.9E-07	< 9.9E-08 [f]	8.5E-09 [g]	1.7E-07 [h]	-- [i]
192-97-2	Benzo(e)pyrene	--	--	--	2.3E-08 [g]	4.2E-07 [h]	-- [i]
191-24-2	Benzo(g,h,i)perylene	5.4E-07	4.1E-07	< 4.9E-07 [f]	2.5E-08 [g]	4.1E-07 [h]	-- [i]
207-08-9	Benzo(k)fluoranthene	2.1E-07	3.0E-07	< 1.6E-07 [f]	4.3E-09 [g]	5.0E-07 [a,h]	-- [i]
92-52-4	Biphenyl	--	--	--	4.0E-06	2.1E-04	--
106-99-0	1,3-Butadiene	--	***3.9E-05***	< 3.9E-05	8.2E-04	2.7E-04	6.6E-04
106-97-8	Butane	--	--	--	4.8E-03	5.4E-04	--
	Butyr/Isobutyraldehyde	--	--	--	4.4E-04	1.0E-04	4.9E-05
56-23-5	Carbon tetrachloride	--	--	--	6.1E-05	< 3.7E-05	< 1.8E-05
108-90-7	Chlorobenzene	--	--	--	4.4E-05	< 3.0E-05	< 1.3E-05
75-00-3	Chloroethane	--	--	--	--	1.9E-06	--

(continued)

Table 4-4. Summary of Emission Factors for Internal Combustion Engines Firing Various Fuels (continued)

CAS Number	Substance	Emission Factor for Engine and Fuel Type					
		Diesel, O_2 < 13% (lb/MMBtu) [a,b]	Diesel, O_2 > 13% (lb/MMBtu) [a,b]	Diesel, O_2 not specified (lb/MMBtu) [c]	Natural Gas/Field Gas, Lean (2-Stroke) (lb/MMBtu) [d]	Natural Gas/Field Gas, Lean (4-Stroke) (lb/MMBtu) [e]	Natural Gas/Field Gas, Rich (4-Stroke) (lb/MMBtu) [j]
67-66-3	Chloroform	--	--	--	4.7E-05	< 2.9E-05	< 1.4E-05
218-01-9	Chrysene	1.5E-06	3.5E-07	3.5E-07 [f]	6.7E-07 [g]	6.9E-07 [h]	-- [i]
110-82-7	Cyclohexane	--	--	--	3.1E-04	--	--
287-92-3	Cyclopentane	--	--	--	9.5E-05	2.3E-04	--
53-70-3	Dibenz(a,h)anthracene	***3.4E-07***	4.1E-07	< 5.8E-07 [f]	-- [g]	1.0E-08 [a,h]	-- [i]
75-34-3	1,1-Dichloroethane	--	--	--	3.9E-05	< 2.4E-05	< 1.1E-05
107-06-2	1,2-Dichloroethane	--	--	--	4.2E-05	< 2.4E-05	< 1.1E-05
78-87-5	1,2-Dichloropropane	--	--	--	4.5E-05	< 2.7E-05	< 1.3E-05
542-75-6	1,3-Dichloropropene	--	--	--	4.4E-05	< 2.6E-05	< 1.3E-05
74-84-0	Ethane	--	--	--	7.1E-02	1.1E-01	7.0E-02
100-41-4	Ethylbenzene	--	--	--	1.1E-04	4.0E-05	< 2.5E-05
106-93-4	Ethylene dibromide	--	--	--	7.3E-05	< 4.4E-05	< 2.1E-05
206-44-0	Fluoranthene	3.9E-06	7.6E-06	7.6E-06 [f]	3.6E-07 [g]	1.1E-06 [h]	-- [i]
86-73-7	Fluorene	1.2E-05	2.9E-05	2.9E-05 [f]	1.7E-06 [g]	5.7E-06 [h]	-- [i]
50-00-0	Formaldehyde	7.7E-05	1.2E-03	1.2E-03	5.5E-02	5.3E-02	2.1E-02
110-54-3	n-Hexane	--	--	--	4.5E-04	1.1E-03	--
193-39-5	Indeno(1,2,3-cd)pyrene	4.0E-07	2.7E-07	< 3.8E-07 [f]	9.9E-09 [g]	1.1E-07 [a,h]	-- [i]
75-28-5	Isobutane	--	--	--	3.8E-03	--	--
67-56-1	Methanol	--	--	--	2.5E-03	2.5E-03	3.1E-03
108-87-2	Methylcyclohexane	--	--	--	3.4E-04	1.2E-03	--

(continued)

Table 4-4. Summary of Emission Factors for Internal Combustion Engines Firing Various Fuels (continued)

CAS Number	Substance	Emission Factor for Engine and Fuel Type					
		Diesel, O_2 < 13% (lb/MMBtu) [a,b]	Diesel, O_2 > 13% (lb/MMBtu) [a,b]	Diesel, O_2 not specified (lb/MMBtu) [c]	Natural Gas/Field Gas, Lean (2-Stroke) (lb/MMBtu) [d]	Natural Gas/Field Gas, Lean (4-Stroke) (lb/MMBtu) [e]	Natural Gas/Field Gas, Rich (4-Stroke) (lb/MMBtu) [j]
75-09-2	Methylene chloride	--	--	--	1.5E-04	2.0E-05	4.1E-05
91-57-6	2-Methylnaphthalene	--	--	--	2.1E-05 [g]	3.3E-05 [h]	-- [i]
91-20-3	Naphthalene	1.3E-04	8.5E-05	8.5E-05 [f]	9.6E-05 [g]	7.4E-05 [h]	< 9.7E-05 [i]
111-84-2	n-Nonane	--	--	--	3.1E-05	1.1E-04	--
111-65-9	n-Octane	--	--	--	7.4E-05	3.5E-04	--
109-66-0	n-Pentane	--	--	--	1.5E-03	2.6E-03	--
198-55-0	Perylene	--	--	--	5.0E-09 [g]	-- [h]	-- [i]
85-01-8	Phenanthrene	4.0E-05	2.9E-05	2.9E-05 [f]	3.5E-06 [g]	1.0E-05 [h]	-- [i]
108-95-2	Phenol	--	--	--	4.2E-05	2.4E-05	--
74-98-6	Propane	--	--	--	2.9E-02	4.2E-02	--
115-07-1	Propylene	2.7E-03	2.6E-03	2.6E-03	2.4E-02 [a]	1.7E-02 [a]	2.0E-02 [a]
129-00-0	Pyrene	3.6E-06	4.8E-06	4.8E-06 [f]	5.8E-07 [g]	1.4E-06 [h]	-- [i]
100-42-5	Styrene	--	--	--	5.5E-05	< 2.4E-05	< 1.2E-05
79-34-5	1,1,2,2-Tetrachloroethane	--	--	--	6.6E-05	< 4.0E-05	2.5E-05
108-88-3	Toluene	2.6E-04	4.0E-04	4.1E-04	9.6E-04	4.1E-04	5.6E-04
79-00-5	1,1,2-Trichloroethane	--	--	--	5.3E-05	< 3.2E-05	< 1.5E-05
526-73-8	1,2,3-Trimethylbenzene	--	--	--	3.5E-05	2.3E-05	--
95-63-6	1,2,4-Trimethylbenzene	--	--	--	1.1E-04	1.4E-05	--
108-67-8	1,3,5-Trimethylbenzene	--	--	--	1.8E-05	3.4E-05	--
540-84-1	2,2,4-Trimethylpentane	--	--	--	8.5E-04	2.5E-04	--

(continued)

Table 4-4. Summary of Emission Factors for Internal Combustion Engines Firing Various Fuels (continued)

CAS Number	Substance	Emission Factor for Engine and Fuel Type					
		Diesel, O_2 < 13% (lb/MMBtu) [a,b]	Diesel, O_2 > 13% (lb/MMBtu) [a,b]	Diesel, O_2 not specified (lb/MMBtu) [c]	Natural Gas/Field Gas, Lean (2-Stroke) (lb/MMBtu) [d]	Natural Gas/Field Gas, Lean (4-Stroke) (lb/MMBtu) [e]	Natural Gas/Field Gas, Rich (4-Stroke) (lb/MMBtu) [j]
75-01-4	Vinyl chloride	--	--	--	2.5E-05	1.5E-05	< 7.2E-06
108-38-3, 106-42-3	Xylene (m,p)	--	1.5E-04	--	5.8E-04 [a]	1.4E-04 [a]	4.7E-04 [a]
95-47-6	Xylene (o)	--	***1.5E-04***	--	2.7E-04 [a]	5.9E-05 [a]	2.3E-04 [a]
1330-20-7	Xylene (total)	1.9E-04	2.6E-04	2.9E-04	2.7E-04	1.8E-04	2.0E-04

Note: lb/MMBtu = pounds per million British thermal units

[a] Source: Hansell and England, 1998.

[b] Bold italic values indicate that all test runs were below detection limit.

[c] Source: U.S. EPA, 1995a, AP-42 Section 3.3, Table 3.3-2. Emission factors are for uncontrolled sources. Emission factors preceded with a less than symbol are based on method detection limits. Note that these emission factors are for diesel engines up to 600 hp. Emission factors for diesel engines greater than 600 hp can be found in AP-42 Section 3.4.

[d] Source: U.S. EPA, 1995a, AP-42 Section 3.2, Table 3.2-1. Emission factors are for uncontrolled sources.

[e] Source: U.S. EPA, 1995a, AP-42 Section 3.2, Table 3.2-2. Emission factors are for uncontrolled sources. Emission factors preceded with a less than symbol are based on method detection limits.

[f] The emission factor for total polycyclic aromatic hydrocarbons (PAH) in U.S. EPA, 1995a, Table 3.3-2 is 1.7E-04 lb/MMBtu.

[g] The emission factor for total PAH in U.S. EPA, 1995a, Table 3.2-1 is 1.3E-04 lb/MMBtu.

[h] The emission factor for total PAH in U.S. EPA, 1995a, Table 3.2-2 is 2.7E-05 lb/MMBtu.

[i] The emission factor for total PAH in U.S. EPA, 1995a, Table 3.2-3 is 1.4E-04 lb/MMBtu.

[j] Source: U.S. EPA, 1995a, AP-42 Section 3.2, Table 3.2-3. Emission factors are for uncontrolled sources. Emission factors preceded with a less than symbol are based on method detection limits.

Table 4-5. Summary of Emission Factors for Combustion Turbines Firing Various Fuels[a]

CAS Number	Substance	Emission Factors for Combustion Turbine and Fuel Type [a, b]			
		Distillate Oil, Type not specified (lb/MMBtu) [c]	Natural Gas, Type not specified (lb/MMBtu) [d]	Natural Gas/Refinery Fuel Gas/Liquefied Petroleum Gas, Duct Burners (lb/MMBtu)	Natural Gas/Refinery Fuel Gas/Liquefied Petroleum Gas, No Duct Burners (lb/MMBtu)
83-32-9	Acenaphthene	-- [e]	-- [f]	2.2E-08	3.3E-09
208-96-8	Acenaphthylene	-- [e]	-- [f]	1.1E-08	2.9E-09
75-07-0	Acetaldehyde	--	4.0E-05	4.1E-06	2.7E-05
107-02-8	Acrolein	--	6.4E-06	--	***1.7E-05***
120-12-7	Anthracene	-- [e]	-- [f]	2.5E-08	3.4E-08
7440-38-2	Arsenic	< 1.1E-05	--	--	--
71-43-2	Benzene	5.5E-05	1.2E-05	--	--
56-55-3	Benzo(a)anthracene	-- [e]	-- [f]	1.5E-08	2.8E-09
50-32-8	Benzo(a)pyrene	-- [e]	-- [f]	--	--
205-99-2	Benzo(b)fluoranthene	-- [e]	-- [f]	2.5E-08	3.3E-09
191-24-2	Benzo(g,h,i)perylene	-- [e]	-- [f]	--	1.9E-09
207-08-9	Benzo(k)fluoranthene	-- [e]	-- [f]	--	2.3E-09
7440-41-7	Beryllium	< 3.1E-07	--	--	--
106-99-0	1,3-Butadiene	< 1.6E-05	< 4.3E-07	--	--
7440-43-9	Cadmium	4.8E-06	--	2.9E-06	5.3E-06
18540-29-9	Chromium (hexavalent)	2.2E-06 [g]	--	***7.0E-06***	***1.5E-06***
7440-47-3	Chromium (total)	1.1E-05	--	5.0E-05	1.3E-05
218-01-9	Chrysene	-- [e]	-- [f]	1.1E-07	4.9E-09
7440-50-8	Copper	--	--	1.2E-05	4.1E-05
53-70-3	Dibenz(a,h)anthracene	-- [e]	-- [f]	--	--

(continued)

Table 4-5. Summary of Emission Factors for Combustion Turbines Firing Various Fuels[a] (continued)

CAS Number	Substance	Emission Factors for Combustion Turbine and Fuel Type [a, b]			
		Distillate Oil, Type not specified (lb/MMBtu) [c]	Natural Gas, Type not specified (lb/MMBtu) [d]	Natural Gas/Refinery Fuel Gas/Liquefied Petroleum Gas, Duct Burners (lb/MMBtu)	Natural Gas/Refinery Fuel Gas/Liquefied Petroleum Gas, No Duct Burners (lb/MMBtu)
100-41-4	Ethylbenzene	--	3.2E-05	--	--
206-44-0	Fluoranthene	-- [e]	-- [f]	9.9E-08	1.2E-08
86-73-7	Fluorene	-- [e]	-- [f]	1.8E-07	1.5E-08
50-00-0	Formaldehyde	2.8E-04	7.1E-04	3.1E-03	3.1E-04
7783-06-4	Hydrogen sulfide	--	--	--	--
193-39-5	Indeno(1,2,3-cd)pyrene	-- [e]	-- [f]	--	1.8E-09
7439-92-1	Lead	1.4E-05	--	***3.6E-05***	2.8E-05
7439-96-5	Manganese	7.9E-04	--	4.8E-05	1.3E-04
7439-97-6	Mercury	1.2E-06	--	4.4E-06	1.5E-05
91-20-3	Naphthalene	3.5E-05 [e]	1.3E-06 [f]	3.7E-05	7.3E-07
7440-02-0	Nickel	< 4.6E-06	--	7.7E-05	1.7E-04
85-01-8	Phenanthrene	-- [e]	-- [f]	6.4E-07	6.5E-08
108-95-2	Phenol	--	--	2.2E-05	6.7E-06
115-07-1	Propylene	--	--	--	1.6E-03
129-00-0	Pyrene	-- [e]	-- [f]	1.2E-07	2.3E-08
7782-49-2	Selenium	< 2.5E-05	--	--	--
108-88-3	Toluene	--	1.3E-04	***1.6E-04***	3.1E-04
1330-20-7	Xylene (total)	--	6.4E-05	***3.7E-04***	7.7E-04
7440-66-6	Zinc	--	--	1.2E-04	5.0E-03

(continued)

Table 4-5. Summary of Emission Factors for Combustion Turbines Firing Various Fuels[a] (continued)

Note: lb/MMBtu = pounds per million British thermal units

[a] Source: Hansell and England, 1998, Volume 1, unless otherwise specified.

[b] Bold italic values indicate that all test runs were below detection limit.

[c] Source: U.S. EPA, 1995a, Section 3.1, Table 3.1-4 and Table 3.1-5. Emission factors are based on an average distillate oil heating value (HHV) of 139 MMBtu/10^3 gal.

[d] Source: U.S. EPA, 1995a, Section 3.1, Table 3.1-3. Emission factors are based on an average natural gas heating value (HHV) of 1,020 Btu/scf at 60°F.

[e] The emission factor for total polycyclic aromatic hydrocarbons (PAH) is 4.0E-05 lb/MMBtu.

[f] The emission factor for total PAH is 2.2E-06 lb/MMBtu.

[g] Hexavalent chromium is assumed to be twenty percent of the total chromium emission factor for the hexavalent chromium emission factor. The hexavalent chromium emission factors for boilers firing fuel oil is about 30 percent of the total chromium emission factor (based on detection limits, which are expected to overstate hexavalent chromium emissions) and 18 percent of the total chromium for oil-fired utilities (U.S. EPA, 1998c), so 20 percent is expected to be a reasonable approximation for hexavalent chromium emissions from distillate oil-fired combustion turbines.

[This page intentionally left blank.]

5. Process Vents

There are a variety of processes and equipment at petroleum refineries that may release pollutants directly into the atmosphere through process vents. Many of these process vents may be controlled using a flare, thermal incinerator, or other air pollution control techniques. This section describes the key process vents and emissions estimation procedures considering controls. At some facilities, the process gases may be routed to the refinery's fuel gas system rather than directly to a control device to the atmosphere. These gases would then be combusted with the fuel gas in either a stationary combustion unit (process heater or boiler) or in a flare. As such, emissions from these gases are expected to be included in the emissions estimated for stationary combustion sources (see Section 4) or for flares (see Section 6). The methods in this section should be used for process vent gases other than those recovered into the refinery's fuel gas system. Particularly, this section provides methods for estimating the emissions associated with catalytic cracking units (CCUs), coking units, CRUs, sulfur recovery plants, and other process vents (e.g., from hydrogen (H_2) plants, asphalt blowing stills, coke calcining units, blowdown system, and vacuum generating units).

Table 5-1 summarizes the general hierarchy of process vent emissions measurement or estimation methods, which are ranked in terms of anticipated accuracy. Within a given measurement method (or rank), there may be alternative methods for determining the constituent-specific emissions. Methodology Ranks 1 and 2 for process vents (i.e., the use of CEMS) have been previously described in Section 4, *Stationary Combustion Sources*. Although Section 5 will note these methods, where applicable, for individual process vents, Section 4 should be reviewed for sample calculations and other important considerations when using CEMS to determine mass emissions rates.

Table 5-1. Summary of Typical Hierarchy of Process Vent Emissions Estimates

Rank	Flow Estimate Method	Compositional Analysis Data
1	Continuous flow meter	Continuous gas composition analyzer
2	Engineering estimates (e.g., F factor)	Continuous gas composition analyzer
3	Continuous flow meter or engineering estimates	Occasional grab samples
4	Measured process rates	Site-specific emissions factor based on source test
5	Measured process rates	Default emissions factors

5.1 Catalytic Cracking Units

The CCU catalyst regenerator vent is often the single largest emissions vent at the refinery. The CCU is a catalytic process used to upgrade (crack) heavy distillates to form lighter, more useful distillates such as heating oils or gasoline. The CCU system consists of a reactor, a catalyst regenerator (commonly referred to as the "regenerator"), vent gas process equipment for energy recovery and emissions control, and an exhaust stack. Nearly all refinery CCU systems operate as fluidized-bed reactors and use air or oil gas flow to transport the very small catalyst particles between the CCU reactor and regenerator. These fluidized CCU systems are commonly referred to as fluid catalytic cracking units (FCCU). There are two or three refineries that use larger catalyst pellets in moving bed-type reactor system, which is commonly referred to as a thermal catalytic cracking unit (TCCU). Nearly all of the available emissions data are specific to FCCU, although data for PM, SO_2 and NO_X emissions are available for one TCCU. The emissions from the TCCU, when normalized on the basis of the coke burn-off rate, are similar to those of a similarly operated (uncontrolled) FCCU. Consequently, while the emissions inventory methods presented in this section are based primarily on FCCU operation and emissions data, these emissions inventory methods should be used for TCCU systems unless direct emissions data are available.

The CCU catalyst regenerator vent releases a wide variety of pollutants, including PM, SO_2, NO_x, carbon monoxide (CO), VOC, metal HAP, organic HAP, and ammonia. As a by-product of the cracking reactions, coke is deposited on the catalyst particles. The coke reduces the activity of the catalyst, and the spent catalyst that is returned from the CCU reactor is regenerated continuously by burning off coke in the CCU catalyst regenerator. There are two basic types of CCU regenerators: complete combustion regenerators and partial combustion regenerators. In a complete combustion regenerator, the regenerator is typically operated at approximately 1,200°F to 1,400°F with excess O_2 and low levels (< 500 ppmv) of CO in the exhaust flue gas. In a partial (or incomplete) combustion regenerator, the regenerator is typically operated at approximately 1,000°F to 1,200°F under O_2-limited conditions and relatively high levels (1% to 5%) of CO. Prior to exiting the regenerator, catalyst particles entrained with the flue gases are initially removed by internal cyclone separators and returned to the regenerator catalyst bed for recirculation to the reactor.

On a routine basis, a small portion of the circulating catalyst, commonly referred to as equilibrium catalyst (E-cat), is removed from the system and fresh catalyst is added to maintain catalyst activity and replace catalyst lost or removed from the system. Various other additives may also be included with the catalyst additions to reduce NO_x or SO_2 emissions or promote complete combustion (thereby reducing CO emissions). Although the CCU vent is the primary emissions source associated with the CCU, fugitive dust emissions associated with handling the fresh catalyst or spent E-cat should also be calculated and included in the emissions inventory for CCU systems.

After the flue gas exits the CCU regenerator, a variety of energy recovery or emissions control systems may be used to reduce pollutant releases. For a complete combustion CCU, a waste heat boiler is often used to recover the latent heat of the flue gas. The energy recovery system also serves to cool the flue gas prior to PM or other add-on control systems. The most common control systems for CCU are electrostatic precipitators (ESP) or wet scrubbers. For a partial combustion CCU, the first control system is typically a CO boiler used to combust the CO in the flue gas to CO_2 and recover the heat of combustion and latent heat of the flue gas (typically by producing steam).

5.1.1 Methodology Ranks 1 and 2 for Catalytic Cracking Units

For SO_2, NO_x, CO, and VOC, it is anticipated that many CCUs will have CEMS for measuring the composition of these pollutants in the exhaust gas. Although few CCUs are expected to have PM CEMS, if PM CEMS are used, these measurements would are also qualify as Methodology Rank 1 or 2 for CCUs even though some "PM augmentation" will be needed as described in **Sections 5.1.2.1** and **5.1.2.2**. Similarly, if CEMS are used for specific HAPs, these measurements should be used and reported as Methodology Rank 1 or 2 for CCUs. Gas flow rate may be directly monitored, but in many cases, the exhaust flow rate will be calculated based on air blast rates and composition monitors (similar to F factors based on coke burn-off rates). Equations in 40 CFR Part 63 Subpart UUU can be used to estimate flow rates based on gas composition analyzers that are typically used to monitor the regenerator combustion parameters. When CEMS or direct-flow monitors are present, these data should be used to calculate annual pollutant emissions.

5.1.2 Methodology Ranks 3 and 4 for Catalytic Cracking Units

For VOC, PM, and specific HAP, it is anticipated that many refineries will have performed source tests of their CCUs. Generally, testing will be conducted infrequently so the testing results represent an emissions rate at a given point in time and production level. Rather than assuming that the mass emissions rate measured during the test occurs continuously for all process operating hours, the resulting source test data are most appropriately used for developing a site-specific emissions factor. This type of emissions factor is the measured emissions rate (lb/hr) divided by the processing rate (throughput per hr). Generally, the emissions from the CCU catalyst regenerator vent are best correlated with coke burn-off rates; however, if CCU feed and operating conditions do not vary significantly, then throughput-based emissions factors

may be used. If multiple tests have been conducted on the CCU and no significant modifications have been made on the CCU or its control system, then an arithmetic average of the emission factors should be used to estimate annual average emissions. If modifications have been made on the CCU or its control system, the most recently performed source test should be used to develop the site-specific emissions factor. To estimate maximum hourly emissions, the highest emission factor developed from the individual runs should be used along with the maximum capacity (or coke burn-off rate) of the CCU.

Example 5-1: Development of Site-Specific Emissions Factor

A source test was performed to determine the PM emissions rate from a CCU. Three test runs were conducted; the PM emissions rates measured during the three test runs were 20.2, 25.1, and 17.6 lb/hr for tests 1, 2, and 3, respectively. The processing rates during the three runs were 1,600; 1,700; and 1,500 barrels per hour (bbl/hr) and the coke burn-off rates were 25,000; 29,000; and 23,000 lb/hr for tests 1, 2, and 3, respectively. An appropriate emissions factor for the CCU can be developed to project annual emissions.

First, the emissions factor for each individual run should be calculated, and then the emissions factors should be averaged. Emissions factors can be assessed using different normalizing factors, such as throughput and coke burn-off rates, as follows:

- Run 1: Emissions/throughput = 20.2 (lb/hr) ÷ 1,600 (bbls/hr) = 0.0126 lb/bbl = 12.6 pounds per thousands of barrels (lb/Mbbl)

  Emissions/coke burn-off = 20.2 (lb/hr) ÷ 25 (1,000 lb/hr) = 0.808 lb/1,000 lbs coke burn-off
- Run 2: Emissions/throughput = 25.1 (lb/hr) ÷ 1.7 (Mbbl/hr) = 14.8 lb/Mbbl

  Emissions/coke burn-off = 25.1 (lb/hr) ÷ 29 (1,000 lb/hr) = 0.866 lb/1,000 lbs coke burn-off
- Run 3: Emissions/throughput = 17.6 (lb/hr) ÷ 1.5 (Mbbl/hr) = 11.7 lb/Mbbl

  Emissions/coke burn-off = 17.6 (lb/hr) ÷ 23 (1,000 lb/hr) = 0.765 lb/1,000 lbs coke burn-off
- Average: Emissions/throughput = (12.6 + 14.8 + 11.7) ÷ 3 = 13.0 lb/Mbbl

  Emissions/coke burn-off = (0.808 + 0.866 + 0.765) ÷ 3 = 0.813 lb/1,000 lb coke burn-off

There are a variety of ways to determine which emissions factor is most appropriate. One method is to compare the range of the test runs compared to the three-run average. For the throughput-based emissions factors, the highest single-run emissions factor is 14% (100% × [14.8 − 13] ÷ 13) higher than the average, and the lowest single-run emissions factor is 10% lower than the average. For the coke burn-off rate emissions factors, the highest single-run emissions factor is 6.5% (100% × [0.866 − 0.813] ÷ 0.813) higher than the average, and the lowest single-run emissions factor is 5.9% lower than the average. The smaller range for the coke burn-off emissions factors (as a percentage of the average) suggests that normalizing the emissions by coke burn-off accounts for more of the differences in the observed emissions than does throughput. Consequently, the average coke burn-off emissions factor would be preferred to the throughput-based emissions factor in this example.

The highest individual run emission factor, 0.866 lb/1,000 lbs coke burn-off in this example, would be used, along with the maximum hourly coke burn-off rate during the year, to estimate the maximum hourly emission rate from this CCU.

Although site-specific emissions factors can be developed for PM, VOC, organic HAP species, or metal HAP species using source test data, there are some unique nomenclature and reporting practices for PM emissions that deserve additional guidance. Additionally, a quasi Methodology Rank 4 for CCU metal

HAP emissions estimates based on a site-specific PM emissions rate has been developed and requires additional explanation. The following subsections discuss additional guidance on providing a complete PM emissions estimate and on estimating metal HAP emissions from PM source test information.

5.1.2.1 PM Emissions Inventory and Test Method Considerations

PM emissions inventories have their own nomenclature and structure. To correctly report PM emissions, an understanding of the reporting nomenclature and the PM testing methods is needed. This subsection provides guidance and background information regarding PM emissions, with a focus on the PM test methods, particularly those methods commonly used when testing the CCU vent.

PM Emissions Inventory Nomenclature

A complete PM emissions inventory includes the following components:

- PM_{10}-PRI: "Primary" PM emissions that are 10 µm in diameter or less. PM_{10}-PRI = PM_{10}-FIL + PM-CON.
- PM_{10}-FIL: Filterable (or front-half catch) portion of the PM emissions that are 10 µm in diameter or less.
- PM-CON: Condensable PM (or back-half catch). All condensable PM is assumed to be less than 2.5 microns (µm) in diameter ($PM_{2.5}$).
- $PM_{2.5}$-PRI: "Primary" PM emissions that are 2.5 µm in diameter or less. $PM_{2.5}$-PRI = PM_{25}-FIL + PM-CON.
- $PM_{2.5}$-FIL: Filterable (or front-half catch) portion of the PM emissions that are 2.5 µm in diameter or less.

Although a complete PM emissions inventory includes PM emissions that are 10 µm in diameter or less, some measurement methods also collect PM particles that are greater than 10 µm in diameter. The following nomenclature is used to designate PM emissions that include PM greater than 10 µm in diameter:

- PM-PRI: "Primary" PM emissions of any particle size. PM-PRI = PM-FIL + PM-CON.
- PM-FIL: Filterable (or front-half catch) portion of the PM emissions of any particle size.

EPA Methods 5, 5B, and 5F are the most commonly used test methods for measuring PM emissions from CCUs. A typical Method 5 sampling train consists of a sampling probe, a heated line and filter, and a series of impingers that are kept in an ice bath. Method 5, 5B, or 5F sampling measures PM that is contained in the sampling probe and filter, which is often referred to as the "front-half" or "filterable" PM catch. PM that condenses in the impinger section of the sampling train is often referred to as the "back half" catch or the "condensable" PM.

One of the main differences between EPA Methods 5, 5B, and 5F is that the sampling line and filter are maintained at 250°F for Method 5 compared to 325°F for Methods 5B and 5F. Although generally not used for the CCU, there are other EPA test methods for PM. EPA Method 17 is similar to Method 5, except that the filter in the Method 17 sampling probe is within the stack so that the "filterable" PM content is measured at the stack temperature. EPA Method 201 is similar to Method 17, except that there is also a cyclone or other sizing device to remove particles greater than 10 µm in diameter prior to the filter so that Method 201 determines PM_{10}-FIL directly. EPA Method 201A, formerly EPA Other Test Method 27 (OTM 27), is similar to EPA Method 201 sampling at stack temperature, but uses a series of cylones to filter out, in succession, particles greater than 10 µm and 2.5 µm in diameter. The particle catch from the second cyclone can be used to determine the PM emissions that are less than 10 µm in diameter but greater than 2.5 µm in diameter. The "filterable" catch from EPAMethod 201A is a direct measure of $PM_{2.5}$-FIL. Therefore, EPA Method 201A provides a means to directly determine PM-FIL, PM_{10}-FIL, and $PM_{2.5}$-FIL. PM CEMS, if used, generally measure only the filterable PM (i.e., PM-FIL).

Any of the Method 5, 17, or 201 variant methods describe only the procedures to determine the front-half or filterable PM catch. EPA Method 202, formerly EPA Other Test Method 28 (OTM 28), uses a dry condensing chamber followed by liquid impingers and specifies the procedures to determine the mass of condensable PM (i.e., PM-CON). Although Method 202 generally references the use of Method 17 (or 201 or 201A) sampling trains, it may also be used in conjunction with EPA Methods 5, 5B, or 5F. As the

filter temperature in Method 5 is different from Methods 5B or 5F and also likely different from the filter temperature when using Method 17, the fraction of PM that is filterable versus condensable, which is a function of the sampling temperature, will also vary depending on the PM sampling method used. Because most of the data available for CCU were collected using EPA Methods 5B or 5F, the condensable PM default emissions factor is most suitable to filterable data collected using Methods 5B or 5F, but may also be used in conjunction with Method 5 sampling data. If Method 202 is used, then the "back-half catch" can be considered PM-CON for the purposes of inventory reporting, regardless of the PM filterable sampling method (i.e., sampling temperature) with which it is paired.

PM fine versus CCU fine

Fine particles that escape from the CCU regenerator are often referred to as "fines" or "FCCU fines" by refinery personnel. In this Refinery Emissions Protocol document, fine particles that escape from the CCU regenerator are referred to as "CCU fines." Please note that CCU fines are not equivalent to "PM fines," which refers to particles that have a diameter of 2.5 µm or less. Generally, we use "$PM_{2.5}$" to denote particles that have a diameter of 2.5 µm or less. As noted in Table 5-2, only a fraction of the "CCU fines" are "PM fines."

To summarize, PM CEMS and EPA Methods 5 (including 5B or 5F) and 17 provide a measure of PM-FIL; EPA Method 201 provides a measure of PM-FIL and PM_{10}-FIL; and EPA Method 201A provides a measure of PM-FIL, PM_{10}-FIL, and $PM_{2.5}$-FIL. EPA Method 202 provides a measure of PM-CON. One important caveat to this is that, in Method 5F, ammonia sulfate particulates are determined and subtracted from the total PM catch to determine the non-sulfate PM emissions. Although the non-sulfate PM value may be used for compliance purposes (for the Petroleum Refinery NSPS or for Refinery MACT II), emissions reported for the inventory should include the total filterable PM catch. That is, the total PM catch before subtracting the sulfate PM emissions should be used to determine PM-FIL for the purposes of reporting for the emissions inventory. The sulfate particulate PM should be considered to be 100% PM fine (i.e., $PM_{2.5}$). Additional guidance on typical CCU particle size distributions is provided in the following subsection.

5.1.2.2 PM Size Distribution Estimates for Catalytic Cracking Units

AP-42 does not contain PM size distribution data for uncontrolled CCU PM emissions, but it does contain typical control device default control efficiencies for different types of PM emissions control devices. A limited number of particle size distribution studies were available in the docket to the Refinery MACT 2 rule (40 CFR Part 63 Subpart UUU; Docket No. A-97-36, Item No. IV-D-19, Attachments 3, 6, and 9). From these data, the mass fraction of total filterable PM (front-half catch) that is less than 2.5 and 10 µm in diameter were determined and representative values are provided in **Table 5-2**. Table 5-2 also provides PM size distribution default values for controlled CCU. The default distribution factors for controlled CCU are based on the uncontrolled PM distributions and the control device default control efficiencies from AP-42. Because the projected size distribution of PM from different control devices was similar, one single set of distribution factors for controlled CCU are provided for controlled units. Control devices considered include tertiary cyclones, wet scrubbers, venturi scrubbers, ESP, and fabric filters. All PM-CON is assumed to be less than 2.5 µm. The size distribution data guidance presented here is specific to FCCU. Facilities operating a TCCU should use site-specific size distribution data if available; otherwise, the default factors in Table 5-2 for a CCU with no post-regenerator PM control device should be used to project PM emissions by particle size.

Table 5-2. Default Size Distribution for Filterable PM from CCU

Source Description	Fraction PM-FIL Less Than 2.5 µm	Fraction PM-FIL Less Than 10 µm
CCU, no post-regenerator PM control device	0.30	0.50
CCU, with post-regenerator PM control device (tertiary cyclone, wet scrubber, ESP, or fabric filter)	0.80	0.97

Example 5-2: PM Emissions Inventory Calculations

The following information is available for a 50,000 barrels/calendar day (bbl/cd) CCU controlled with an ESP. On average, the CCU burned 36,000 pounds of coke per hour and operated for 8,700 hours in the reporting year. During the most recent source test using EPA Method 5F, the CCU had non-sulfate PM emissions of 0.7 pound per 1,000 pounds of coke burn-off and PM emissions (including sulfates) of 0.9 pound per 1,000 pounds of coke burn-off. The "back-half" catch was also analyzed and was determined to be 0.45 pounds per 1,000 pounds of coke burn-off.

PM-FIL = 0.9 (lb/1,000 lb coke burn-off) × 36 (1,000 lb of coke burn-off per hour) × 8,700 (operating hours per year)

= 281,880 lb = 140.9 tons/yr

PM-CON = 0.45 (lb/1,000 lb of coke burn-off) × 36 (1,000 lb of coke burn-off/hr) × 8,700 (operating hours/yr)

= 140,940 lb = 70.5 tons/yr

PM-PRI = PM-FIL + PM-CON = 140.9 + 70.5 = 211.4 tons/yr

For Method 5F, special consideration is made for the sulfate PM, because all of this PM is expected to be less than 2.5 µm. For Method 5 or 5B, PM_{10}-FIL = (fraction < 10 µm from **Table 5-2**) × PM-FIL. For Method 5F, PM_{10}-FIL = (fraction < 10 µm from **Table 5-2**) × PMnon-sulfate + PMsulfate. Similar consideration is needed for the $PM_{2.5}$-FIL calculation. Because the CCU is controlled, the appropriate fractions from **Table 5-2** are 0.97 for the PM_{10}-FIL calculation and 0.80 for the $PM_{2.5}$-FIL calculation.

PMnon-sulfate = 0.7 (lb/1,000 lb coke burn-off) × 36 (1,000 lb coke burn/hr) × 8,700 (hr/yr)

= 219,240 lb = 109.6 tons/yr

PMsulfate = PM-FIL – PMnon-sulfates = 140.9 – 109.6 = 31.3 tons/yr

PM_{10}-FIL = fraction < 10 µm from **Table 5-2**] × PMnon-sulfate + PMsulfate

= 0.97 × 109.6 + 31.3 = 137.6 tons/yr

PM_{10}-PRI = PM_{10}-FIL + PM-CON = 137.6 + 70.5 = 208.1 tons/yr

$PM_{2.5}$-FIL = (fraction < 2.5 µm from **Table 5-2**) × PMnon-sulfate + PMsulfate

= 0.8 × 109.6 + 31.3 = 119.0 tons/yr

$PM_{2.5}$-PRI = $PM_{2.5}$-FIL + PM-CON = 119.0 +70.5 = 189.5 tons/yr

5.1.3 Methodology Rank 5A for CCU Metal HAP Emissions Estimates

During CCU processing, metals deposit on the catalyst particles and slowly deactivate the catalyst. Also during processing, the catalyst particles may slowly break into finer particles, which can no longer be recovered by the CCU regenerator internal cyclones. To maintain the desired catalyst activity, a portion of the recirculating catalyst (i.e., E-cat) is regularly withdrawn from the process and new (fresh) catalyst is added. New catalyst particles often have irregularities (spurs) that break off during catalyst recirculation. Consequently, the CCU fines that escape from the CCU regenerator typically have a slightly higher proportion of fresh catalyst than does the E-cat. This is significant because fresh catalyst will have less metal deposits than a catalyst that has been recirculating for days or weeks. Available paired observations of E-cat and CCU fines data indicate that the metal HAP concentration on the CCU fines are consistently lower than on the E-cat, supporting the hypothesis that the CCU fines contain a higher fraction of fresh catalyst than does the E-cat.

If metal HAP emissions tests are performed, then site-specific metal HAP emissions factors should be determined (using the methods provided in Section 5.1.2, *Methodology Ranks 3 and 4 for Catalytic Cracking Units*,) and used directly to assess metal HAP emissions rates as a Rank 4 method. However, few facilities are expected to have performed metal HAP speciation emissions tests for their CCU. On the other hand, nearly all facilities have their equilibrium catalyst (i.e., the catalyst within the CCU, commonly referred to as "E-cat") tested regularly for certain metal contaminants to monitor catalyst activity and replacement needs. Some facilities also have their CCU fines tested occasionally for metal HAP concentrations.

If a facility has a site-specific PM emissions factor, then either CCU fines or E-cat analysis can be used as a means to calculate a site-specific HAP emissions rate using the methodology described in this section. This Methodology Rank 5A for CCU metal HAP emissions estimates is expected to be more representative than a default emissions factor, but not as good as a directly measured HAP-specific emissions factor. This method involves using the site-specific (non-sulfate, if available) PM emissions rate, and estimating the concentration of metal HAP on the emitted PM based on the concentration of metal HAP on the CCU fines or E-cat using the procedures provided in this section. This method is not applicable for mercury (Hg) because it assumes the metals are associated with the catalyst particles and are not in the vapor phase.

If metal HAP concentrations of CCU fines are available, then these data should be used (preferentially to E-cat data) to estimate the metal HAP concentration of the emitted PM. It is assumed that the emitted PM has the same metal HAP concentration as the CCU fines. If metal HAP concentrations for CCU fines are not available, then the metal HAP composition of the emitted PM can be estimated as 80% of the E-cat concentration.

It is expected that CCU fine or E-cat concentration data will be available for nickel (Ni) and vanadium because these are the primary metals that poison CCU catalyst activity, but concentration data may be available for other metals as well. **Table 5-3** lists metal HAP generally present in CCU fines. If the concentrations of these metal HAP are not determined for the CCU fines or E-cat, then they should be estimated using the measured Ni concentration and the concentration ratios for these other metal HAP as provided in Table 5-3.

Equation 5-1 is a basic equation used to calculate annual metal HAP emissions based on the annual PM emissions rate and CCU fines metal HAP concentrations.

$$E_i = PM\text{–}FIL \times \frac{C_i}{1{,}000{,}000 \text{ mg/kg}} \qquad \text{(Eq. 5-1)}$$

where:

E_i = Emissions rate of metal HAP "i" (tons/yr)
PM-FIL = Filterable PM emissions rate from site-specific PM emissions factor; if EPA Method 5F is used, then use PMnon-sulfate rather than PM-FIL (ton/yr)
C_i = Concentration of metal HAP "i" on the CCU fines (milligrams per kilogram [mg/kg])
= $0.8 \times C_{E\text{-}cat,i}$, if only E-cat concentration are available
= $C_{Nickel} \times$ (factor from Table 5-3), if other metal HAP concentrations are not available

Note that $E_i = E_{Nickel} \times$ (factor from **Table 5-3**) when other metal HAP concentration data are not available. If vanadium concentrations are available but nickel concentrations are not, the nickel concentration should be calculated by dividing the vanadium concentration by the default ratio for vanadium in Table 5-3, and the calculated nickel concentrations and the default ratios in Table 5-3 then used to project the concentrations of other metal HAPs.

Table 5-3. Default Ratio of Metal HAP Composition of CCU Fines[a]

Metal HAP	Ratio of Metal HAP to Nickel Concentration
Antimony	0.065
Arsenic	0.010
Beryllium	0.003
Cadmium	0.013
Chromium (total)[b]	0.25[b]
Cobalt	0.052
Lead	0.08
Manganese	0.13
Nickel	1.00
Selenium	0.025[c]
Vanadium[d]	1.32
Zinc[d]	0.74

[a] Concentration ratios are based on average electrostatic precipitator dust analyses across six refineries.
[b] Limited data are available to assess the amount for hexavalent chromium that is present, if any. If site specific data are not available, it is recommended that a default value of 10 percent of the total chromium emissions be used to estimate the hexavalent chromium emissions associated with the CCU.
[c] Selenium was highly variable, being significant for some units and below the detection limit for several others. Consequently, this value is highly uncertain.
[d] Vanadium and zinc are not HAPs, but are included here (and in Table 1-1) as other pollutants of interest.

Example 5-3: Methodology Rank 5A for Metal HAP Emissions Estimates

Following the previous example, PMnon-sulfate emissions were calculated to be 109.6 tons/yr. If only Ni concentration for E-cat is available, what are the metal HAP emissions if the average Ni E-cat concentration is 1,200 mg/kg?

The concentration of Ni on the emitted PM is calculated based on the E-cat concentration as follows:

$C_{Nickel} = 0.8 \times 1{,}200 = 960$ mg/kg

The following equation should be used to calculate the emissions rate of Ni from the PM emissions rate on estimated Ni concentration:

$E_{Nickel} = 109.6$ tons/yr × (960 mg/kg) ÷ (1,000,000 mg/kg) = 0.105 tons/yr

The following equations should be used to estimate the emissions rate of other metal HAP from the emissions rate of Ni:

$E_{Antimony} = 0.105$ tons/yr × 0.065 = 0.0068 tons/yr

$E_{Arsenic} = 0.105$ tons/yr × 0.010 = 0.00105 tons/yr

$E_{Beryllium} = 0.105$ tons/yr × 0.003 = 0.0003 tons/yr

$E_{Cadmium} = 0.105$ tons/yr × 0.013 = 0.0014 tons/yr

$E_{Chromium} = 0.105$ tons/yr × 0.25 = 0.026 tons/yr

$E_{Cobalt} = 0.105$ tons/yr × 0.052 = 0.0055 tons/yr

$E_{Lead} = 0.105$ tons/yr × 0.08 = 0.0084 tons/yr

$E_{Manganese} = 0.105$ tons/yr × 0.13 = 0.014 tons/yr

$E_{Selenium} = 0.105$ tons/yr × 0.025 = 0.0026 tons/yr

$E_{Vanadium} = 0.105$ tons/yr × 1.32 = 0.14 tons/yr

$E_{Zinc} = 0.105$ tons/yr × 0.74 = 0.088 tons/yr

Although total chromium emissions have been found above detectable concentrations in the CCU regenerator vent, very few tests have been performed to determine Cr^{+6} emissions. The few tests that have been performed have not found Cr^{+6} above detection limits, but the detection limits have been comparable to the detected total chromium emissions. Emissions of Cr^{+6} from coal-fired power plants indicated that Cr^{+6} emissions were 11 percent of the total chromium emissions (U.S. EPA, 1998c). Based on these limited data, it is recommended that, for the CCU vent, Cr^{+6} emissions be estimated as 10% of the total chromium emissions. Thus, in the example calculation provided, Cr^{+6} emissions would be estimated to be 0.0026 tons/yr.

Emissions of Hg should be estimated for the CCU; however, Hg emissions are not expected to be correlated with the PM emissions because very little, if any, of the Hg emissions are expected to be particulate bound. Mercury emissions are more likely correlated with the CCU throughput or coke burn-off rate. Thus, Hg emissions should be estimated independently of other HAP metals. If Hg emissions data are available based on source test data for the site, then the source test data can be used, as a Methodology Rank 4 for metal HAP emissions estimates, to develop a site-specific emissions factor. Otherwise, Hg emissions should be estimated using a default (Rank 5B) emissions factor rather than using this Rank 5A method.

5.1.4 Methodology Rank 5B for Catalytic Cracking Units

For most organic HAP (e.g., formaldehyde, benzene, benzo[a]pyrene, dioxin/furans) and other pollutants such as hydrogen cyanide and Hg, default emissions factors may be all that are available. When direct emissions monitoring or site-specific emissions factors are not available, then the default emissions factors presented in **Table 5-4** should be used to calculate the emissions from the CCU regenerator vent. Note that all CCU are considered "controlled for organics" if they meet the 500 ppmv CO emissions limit.

Table 5-4. Organic HAP Emissions Factors for CCU Catalyst Regenerator Vent

CAS No.	Compound	Emissions Factor (lb/MMbbl)[a]	Emissions Factor (lb/klb coke burn-off)[b]
Volatile Organics			
75-07-0	Acetaldehyde	20	0.0013
67-64-1	Acetone	2.4	1.6E-4
107-02-8	Acrolein	1.0	6.6E-5
71-43-2	Benzene	18	1.1E-3
74-83-9	Bromomethane	2.1	1.4E-4
106-99-0	1,3-Butadiene	0.033	2.0E-6
100-41-4	Ethylbenzene	0.24	1.6E-5
50-00-0	Formaldehyde	260	0.016
75-09-2	Methylene chloride	6.7	4.4E-4
108-95-2	Phenol	8.7	5.7E-4
108-88-3	Toluene	3.5	2.1E-4
75-69-4	Trichlorofluoromethane	2.4	1.6E-4
1330-20-7	Xylene	3.2	2.1E-4
Semivolatile and Nonvolatile Organics(excluding dioxin/furans)			
83-32-9	Acenaphthene	0.0033	2.2E-7
208-96-8	Acenaphthylene	0.13	7.8E-6
120-12-7	Anthracene	0.10	6.7E-6
56-55-3	Benzo(a)anthracene	0.00052	3.8E-8
50-32-8	Benzo(a)pyrene	0.011	7.1E-7
205-99-2	Benzo(b)fluoranthene	0.0035	2.4E-7
192-97-2	Benzo(e)pyrene	0.00045	3.3E-8
191-24-2	Benzo(g,h,i)perylene	0.0046	3.1E-7
207-08-9	Benzo(k)fluoranthene	0.0026	1.8E-7
218-01-9	Chrysene	0.0033	2.3E-7
53-70-3	Dibenz(a,h)anthracene	0.0042	2.8E-7
206-44-0	Fluoranthene	0.093	6.1E-6
86-73-7	Fluorene	0.037	2.4E-6
193-39-5	Indeno(1,2,3-cd)pyrene	0.0044	3.0E-7
91-57-6	2-Methylnaphthalene	0.026	1.8E-6
91-20-3	Naphthalene	1.0	7.0E-5
85-01-8	Phenanthrene	0.24	1.6E-5
129-00-0	Pyrene	0.0031	2.2E-7

(continued)

Table 5-4. Organic HAP Emissions Factors for CCU Catalyst Regenerator Vent (continued)

CAS No.	Compound	Emissions Factor (lb/MMbbl)[a]	Emissions Factor (lb/klb coke burn-off)[b]
Dioxins/Furans			
57117-31-4	Pentachlorodibenzofurans	5.5E-07	3.2E-11
57117-44-9	Hexachlorodibenzofuran	1.1E-06	6.3E-11
35822-46-9	Heptachlorodibenzo-p-dioxin	9.4E-07	5.6E-11
Inorganics			
7664-41-7	Ammonia	13,000	0.57
75-15-0	Carbon disulfide	0.56	3.7E-5
7647-01-0	Hydrogen chloride	1,800	0.11
74-90-8	Hydrogen cyanide	8,000	0.50
7439-97-6	Mercury	0.094[c]	6.0E-6[c]

[a] Emissions factors for CCU controlled for organics in pounds per million barrels of CCU feed.
[b] Emissions factors for CCU controlled for organics in pounds per thousand pounds of coke burn-off.
[c] Total mercury emissions factor. Elemental mercury emissions are approximately 80 percent of total mercury emissions and divalent (oxidized plus particulate) mercury emissions are approximately 20 percent of total mercury emissions.

The emission factors presented in Table 5-4 are based on the emission data collected to support the Refinery MACT 2 rule. While there appear to be slight differences in how outlier and non-detect values were handled, the emission factors in Table 5-4 agree well with the average emission factors developed by Bertrand and Siegell (2002).

Based on the lack of data for PAH and furan emissions, the emissions estimates for these compounds have high uncertainties, likely an order-of-magnitude either high or low. The California Air Resources Board (CARB), with EPA's support, conducted an emissions source test at a complete combustion FCCU (without a post-combustion device). The only dioxin isomer detected in all runs was octachloro-dibenzo-p-dioxin (OCDD); octachloro-dibenzo-furan (OCDF) and heptachloro-dibenzo-p-dioxin (hepta-CDD) were detected in one run. All dioxin/furan quantities that were detected were detected at levels below the method quantitation limit for the analysis. All polychlorinated biphenyls (PCBs) isomers were below detection limits. This additional source test was not included in the development of the Petroleum Refinery MACT II emissions factors, but it confirms low emissions of dioxins/furans and PCBs from the CCU catalyst regenerator vent.

5.2 Fluid Coking Units

Coking units use heat to thermally crack heavy hydrocarbon streams to form lighter, more useful distillates such as heating oils or gasoline. There are three basic types of coking units: traditional fluid coking units, flexicoking units, and delayed coking units. Traditional fluid coking units are one of the largest vent emissions sources at a refinery, being comparable to emissions from the CCU regenerator. However, there are only a handful of traditional fluid coking units currently in operation in the United States. Flexicoking units, which are also rare, do not have a direct atmospheric vent. Instead, these units produce a low heating value syngas that can be subsequently used as fuel in process heaters or boilers. Emissions from the combustion of flexicoking syngas should be determined using the methods described in Section 4, *Stationary Combustion Sources*. Nearly all new coking units being built at refineries are delayed coking units, which are discussed further in Section 5.3.

Fluid coking units have several similarities to a CCU. The coking unit contains a burner section and a reactor section. In the burner section, heat for the coking reaction is supplied by burning a portion of the coke that is produced. In the reactor, fine coke particles are produced as a result of the thermal cracking process. Prior to exiting the coking unit, coke particles entrained with the flue gases are removed by internal cyclone separators and recovered as a product, with a portion of the produced coke recycled to the burner section. The coke burner is operated with limited air—enough to combust the diverted coke (to provide heat for the coking reaction)—but limited enough to prevent O_2 from getting into the reactor section. The exhaust gas from the coking unit burner has high levels of CO, which is typically combusted in a CO boiler to recover the latent heat of the CO. The CO boiler also acts to combust any organics entrained in the flue gas. The gas may then be further processed to remove PM or SO_2 in the flue gas. The fluid coking unit vent releases a wide variety of pollutants, including PM, SO_2, NO_x, CO, VOC, metal HAP, organic HAP, and ammonia.

Special considerations should be taken to estimate the amount of total sulfur compounds present in fuel gas generated from the fluid coking unit. Coking units have been found to produce appreciable quantities of methyl mercaptans and other reduced sulfur compounds that are not as efficiently removed from sour gas as is H_2S. Consequently, SO_2 emissions from fuel gas combustion devices receiving fuel gas generated from a fluid coking unit should account for this additional sulfur that is not measured by H_2S monitors (see Section 4, *Stationary Combustion Sources*, for further details).

Note also that fluid coking units, in particular, may have significant fugitive PM emissions from the handling of the produced coke. Methodologies for these fugitive PM emissions are described in Section 10, *Fugitive Dust Sources*.

5.2.1 Methodology Ranks 1 and 2 for Fluid Coking Units

For SO_2, NO_x, CO, and CO_2, it is anticipated that most units will have CEMS for measuring the composition of the exhaust gas. Gas flow rate may be directly monitored, but in many cases, the exhaust flow rate will be calculated based on air blast rates and composition monitors (similar to F factors).

5.2.2 Methodology Ranks 3 and 4 for Fluid Coking Units

Source tests should be available for PM (and perhaps SO_2 and NO_x, if not continuously monitored) so that site-specific emissions factors should be available. It is anticipated that the pollutant emissions will primarily be a function of the coke burn rates; however, limited data are available to assess this hypothesis.

5.2.3 Methodology Rank 5 for Fluid Coking Units

We do not have data to provide default emissions factors for fluid coking units.

5.3 Delayed Coking Units

Coking units use heat to thermally crack heavy hydrocarbon streams to form lighter, more useful distillates such as heating oils or gasoline. Most of the coking units in operation within the United States are delayed coking units. Unlike most other refinery operations that are continuous, delayed coking units are operated in a semi-batch system. Most delayed coking units consist of a large process heater, typically two coking drums, a single product distillation column, and coke cutting equipment. The process heater heats the heavy feed oil to near cracking temperatures, and then the oil is fed to one of the coking drums. As the cracking reactions occur, coke is produced in the drum and begins to fill the drum with sponge-like solid coke material. Once filled, the feed is diverted to the second coke drum. The full coke drum is cooled by slowly adding water to the vessel, which quickly turns to steam, and the steam helps to cool and purge organics in the coke matrix. After the coke drum is sufficiently cooled, the drum is opened and the coke is removed from the vessel using high-pressure water. Once the coke is cut out of the drum, the

drum is closed, and prepared to go back online. A single coke drum is typically on-line receiving oil for 14 to 18 hours and then off-line for cooling and decoking for 14 to 18 hours, so a complete cycle time is approximately 28 to 36 hours.

During the reaction process, the delayed coking unit is a closed system. When the coke drum is taken off-line, the initial steaming process gas is also recovered through the unit's product distillation column. As the steaming cycle continues, the gas is sent to a blowdown system to recover the liquids. The gas is typically sent to a flare, a flare gas recovery system, or the refinery's gas plant for further processing/recovery. Near the end of the steaming process, a vent is opened to allow the remaining steam and vapors to be released into the atmosphere prior to draining and opening the drum. This atmospheric vent is commonly referred to as the delayed coking unit steam vent. Emissions from the delayed coking unit steam vent are primarily CH_4 and ethane, but include a variety of volatile and semi-volatile organics.

Although Section 5 primarily addresses the process vent emissions from a given source, fugitive emissions are also released from the delayed coking unit when the coke drum is drained, opened and the coke is cut from the drum. During the draining process, hot water (and potentially super-heated water) is discharged from the coke drum to an open drainage pit, where steam and organic contaminants are released from the draining water. Some facilities begin draining immediately upon opening the atmospheric vent while others wait for the steam released during the venting process to subside before draining the coke drum. Draining the coke drum early in the venting cycle reduces the amount of emissions that are released from the vent but increases the amount of emissions released in the drainage area. Because the emissions from the delayed coking unit steam vent is dependent on the timing of water draining and because a complete emissions inventory is desired, the calculation methodologies and emission factors presented in this section for organic constituents are intended to account for the emissions from the entire decoking process operations (venting, draining, drum opening, and coke cutting). If emissions are estimated based on site-specific measurements or tests conducted only on the coke drum steam vent, then a separate analysis should be conducted to estimate the emissions during the draining and coke cutting processes as discussed in Section 5.3.3, *Methodology Rank 4 for Delayed Coking Units*.

PM emissions from the coke cutting operations and subsequent coke storage and handling facilities should be estimated using the methodologies described in Section 10, *Fugitive Dust Sources*. The cutting water will absorb some hydrocarbons, so this water will also become a source of organic emissions; therefore, organic emissions from impoundments, ponds, or open tanks used to store the cutting liquids should be estimated using the methodologies described in Section 7.2.5, *Equalization Tanks*. That is, the organic emissions methodology presented in this section are expected to include the emissions that occur during the active draining process as liquid drops from the coke drum vessel and is diverted to the coke pit. Subsequent emissions from the water stored in the coke pit or other vessels is not considered in the methodologies presented in this section. The appropriate methods presented in Section 7 of this Refinery Emissions Protocol document should be used to estimate the emissions from these ancillary sources.

As with fluid coking units, special considerations should be taken to estimate the amount of total sulfur compounds that are present in fuel gas generated from delayed coking units. Coking units have been found to produce appreciable quantities of methyl mercaptans and other reduced sulfur compounds that are not efficiently removed from the sour gas as H_2S. Consequently, SO_2 emissions from fuel gas combustion devices receiving fuel gas generated from a delayed coking unit should account for this additional sulfur that is not measured by H_2S monitors (for more detail, see Section 4, *Stationary Combustion Sources*).

5.3.1 Methodology Ranks 1 and 2 for Delayed Coking Units

Delayed coking units vent periodically and only for relatively short periods of time during depressurization of the unit after the coking cycle. As such, delayed coking units are not expected to use CEMS. If CEMS are used, Methodology Rank 1 for process vents could be used, but then additional calculations must be performed to estimate the emissions from the active draining process and coke cutting process as discussed in Section 5.3.3, *Methodology Rank 4 for Delayed Coking Units*. The gas flow rate cannot be estimated using F factors, so Methodology Rank 2 for process vents is not applicable to the delayed coking unit vent.

5.3.2 Methodology Rank 3 for Delayed Coking Units

A number of source tests have recently been performed on delayed coking unit vents. Pollutant emissions from the delayed coking unit steam vent are well correlated with steam generation rates and a heat balance can be used to estimate the total amount of steam generated (Coburn, 2013). This approach, as presented in this section, estimates the combined emissions from the delayed coking unit steam vent and the active draining process. If a refinery begins draining soon after venting is initiated, a larger portion of the emissions will be released in the drainage area below the delayed coking unit as compared to a refinery that waits for some time period (30 minutes to several hours) prior to draining. For inventory purposes, it is not necessary to attempt to differentiate the emissions between the different emissions release points; one can attribute all of the emissions to the delayed coking unit steam vent stack.

The mass of steam generated and released per decoking cycle can be estimated as follows:

$$M_{steam} = \frac{\left(1 - f_{ConvLoss}\right) \times \left(M_{water} \times C_{p,water} + M_{coke} \times C_{p,coke}\right)}{\Delta H_{vap}} \times \frac{\times \left(T_{overhead} - 212\right)}{2} \qquad \text{(Eq. 5-2)}$$

Where:

M_{steam} = Mass of steam generated and released per decoking cycle (pounds per cycle; lbs/cycle).

$f_{ConvLoss}$ = fraction of total heat loss that is due to convective heat loss from sides of the coke drum vessel (unitless). Use the default value of 0.10.

M_{water} = Mass of water in the coke drum vessel prior to at the end of the cooling cycle prior to atmospheric venting (lbs/cycle).

$C_{p,water}$ = Heat capacity of water (British thermal units per pound per degree Fahrenheit; Btu/lb/°F). Use the default value of 1.0 Btu/lb/°F.

M_{coke} = Typical dry mass of coke in the delayed coking unit vessel at the end of the coking cycle (lbs/cycle).

$C_{p,coke}$ = Heat capacity of petroleum coke (Btu/lb/°F). Use the default value of 0.265 Btu/lb/°F.

$T_{overhead}$ = Temperature of the delayed coking unit vessel overhead line measured as near the coke drum vessel as practical just prior to venting the atmosphere (°F). If the temperature of the delayed coking unit vessel overhead line is less than 216 °F, use $T_{overhead}$ = 216 °F

212 = Temperature at which steam generation is assumed to stop (°F). .

ΔH_{vap} = Heat of vaporization of water (British thermal units per pound; Btu/lb). Use the default value of 960 Btu/lb.

The typical dry mass of coke in the coke drum vessel can be calculated based on coke production quantities per cycle. Alternatively, it can be estimated based on the typical coke drum outage as follows:

$$M_{coke} = \rho_{bulk} \times \left(\left(H_{drum} - H_{outage} \right) \times \frac{\pi \times D^2}{4} \right) \qquad \text{(Eq. 5-3)}$$

Where:

ρ_{bulk} = Bulk coke bed density pounds per cubic feet; lb/ft^3). Use the default value 42.2 lbs/ft^3.

H_{drum} = Internal height of coking unit vessel (feet; ft).

H_{outage} = Typical distance from the top of the coking unit vessel and the top of the coke bed (i.e., coke drum outage) at the end of the coking cycle (ft).

D = Diameter of coking unit vessel (ft).

The mass of water in the coke drum vessel can be calculated based on the typical water height in the coke drum while accounting for the volume of coke particles present. Assuming the water completely covers the coke bed, the mass of water in the coke drum can be estimated as follows:

$$M_{water} = \rho_{water} \times \left(\left(H_{water} \right) \times \frac{\pi \times D^2}{4} - \frac{M_{coke}}{\rho_{particle}} \right) \qquad \text{(Eq. 5-4)}$$

Where:

ρ_{water} = Density of water at the coke drum temperature (lb/ft^3). The default value for the density of water at 220 ºF is 59.5 lbs/ft^3

H_{water} = Typical distance from the bottom of the coking unit vessel to the top of the water level at the end of the cooling cycle just prior to atmospheric venting (ft).

$\rho_{particle}$ = Particle density of petroleum coke (lb/ft^3). Use the default value 84.3 lbs/ft^3.

The annual mass emissions of a pollutant can be estimated using Equation 5-5 and the emission factors presented in **Table 5-5** that are provided in units of pounds per 1,000 pounds (lbs/1000 lb) steam. Typically, all coking drums for a given DCU will have similar size and operational characteristics, so Equation 5-5 can be applied once considering all decoking events for the DCU. If the coke drums have different sizes or operating characteristics, Equation 5-5 should be used separately for each coke drum.

$$E_i = M_{steam} \times EmF_{DCU,i} \times N \times 0.001 \qquad \text{(Eq. 5-5)}$$

Where:

E_i = Annual emissions of pollutant "i" (pound per year; lb/yr).

$EmF_{DCU,i}$ = Emissions factor for delayed coking units for pollutant "i" in Table 5-5 that are provided in units of pounds per 1,000 pounds (lbs/1000 lb) steam.

N = Cumulative number of decoking (venting) cycles.

0.001 = Conversion factor (number of "1000 pounds" per pound).

5.3.3 Methodology Rank 4 for Delayed Coking Units

For facilities that have performed source tests, site-specific emissions factors can be developed and used. However, as noted previously, the emissions released from the vent are highly dependent on the timing of the coke drum draining relative to the inititiation of venting. If draining during the source test was initated sooner than 1 hour after the start of venting, then a separate analysis should be conducted to estimate the emissions from the draining process. The draining emissions can be estimated using the methodologies described in Section 7.2.1, *Primary Weirs* (to model the initial drop and cascading of water to the drainage pit); however, the Henry's law constants used for the calculation should be adjusted to the temperature of the drain water. The temperature adjustment input for the weirs model in RWET does not adjust the Henry's law constant and appropriate Henry's law constants for the average temperature of the drained water should be entered into the site-specific properties section of the Chemical Properties sheet to properly account for the high temperature of the drain water. Temperature dependent Henry's law constants can be determined using the data and methods presented by Sander (1999). Although the precise increase is constituent specific, in the absence of temperature-specific Henry's law coefficients, the Henry's law constant for compounds in the drain water can be estimated to be 10 times greater than the Henry's law constant reported at 25 ºC.

Emissions from opening and decoking the coke drum can be estimated using the methods presented in Section 11.1, *Gaseous Process Vessel Depressurization and Purging* provided that the coke drum contents are sufficiently cooled so that minimal additional steam generation occurs during the coke cutting process. If significant quantities of steam are generated during the coke cutting process, the method in Section 11.1 will underestimate the total emissions. Default volume fractions of pollutants in the coke drum gas for use with Equation 11-1 are provided in Table 5-5.

Table 5-5. Emissions Factors for Delayed Coking Unit Decoking Operations

CAS No.	Compound	Emissions Factor for Methodology Rank 3 for Delayed Coking Units (lb/1,000 lb steam)	Volume Fraction for Use in Equation 11-1 for Coke Drum Opening and Coke Cutting (scf/scf of coke drum gas)	Emissions Factor for Methodology Rank 5 for Delayed Coking Units (lb/cycle)[a]
106-99-0	Methane	7.9	1.8E-2	250
74-84-0	Ethane	1.7	2.0E-3	53
VOC	Nonmethane/nonethane VOC	1.7	1.4E-3 [b]	55
71-43-2	Benzene	0.032	1.5E-5	0.65
108-88-3	Toluene	0.12	4.7E-5	4.9
100-41-4	Ethylbenzene	0.011	3.7E-6	0.085
1330-20-7	Xylene	0.089	3.0E-5	0.67
108-95-2	Phenol	0.0009	3.4E-7	0.046
1319-77-3	Cresols (total)	0.001	3.3E-7	0.077
120-12-7	Anthracene	0.002	4.0E-7	0.072
86-73-7	Fluorene	0.002	4.3E-7	0.081
91-57-6	2-Methylnaphthalene	0.028	7.1E-6	1.3
91-20-3	Naphthalene	0.014	3.9E-6	0.75
85-01-8	Phenanthrene	0.005	1.0E-6	0.21

[a] Emissions are in pounds per emissions event or per cycle considering a single coke drum.
[b] Concentration of VOC reported as propane.

5.3.4 Methodology Rank 5 for Delayed Coking Units

Source test data are available for five delayed coking units (SCAQMD, 2004a, 2004b, 2004c, and 2004d; URS Corporation, 2008). From these data, average concentrations and emissions factors were developed (see Table 5-5). While the emissions are expected to be higher for units that start to depressurize at higher coke drum pressures, the emissions were also dependent on the time steaming occurred prior to depressurization and the temperature of the drum (how much additional steam was generated after the steam vent was opened. Due to the complexities of the delayed coking unit steam vent and the limited test data available, correlations to account for different process variables (venting pressure, drum temperature and steaming time prior to venting) are not currently available, and the default emissions factors in Table 5-5 should be used when site-specific measurement or test data are not available.

5.4 Catalytic Reforming Units

The CRU is a series of catalytic reactors that turn naphtha into high-octane gasoline. There are no direct atmospheric vents from the naphtha-reforming process, but the catalyst activity slowly diminishes with time and the catalyst must be regenerated. There are three basic types of CRU catalyst regeneration operations: continuous, cyclic, and semi-regenerative. Continuous CRU catalyst regenerators operate continuously with a small slip stream of catalyst being re-circulated between the CRU and the regenerator. In cyclic CRU, there is essentially an extra CRU reactor. When regeneration is needed, one reactor is cycled offline and regenerated. The regeneration of the offline reactor is a batch process. When complete, the reactor is returned to service, and the next reactor is cycled offline and regenerated. This process continues until all reactors are regenerated. In a cyclic CRU, regeneration may occur for 1,000 to 4,000 hours per year. The semi-regenerative CRU operates without regeneration for 8 to 18 months, then the entire unit is brought offline, and the entire unit is regenerated. The overall regeneration cycle typically takes 1 to 2 weeks.

During regeneration, there are several potential atmospheric vents. Although the location of the emission points might vary depending on whether catalyst regeneration is continuous, cyclic, or semi-regenerative, there are three times or locations during the regeneration process that emissions can occur regardless of the regenerator type. For continuous regeneration, venting occurs from three distinct vents as follows: (1) the initial depressurization and purge vent; (2) the coke burn pressure control vent; and (3) the final catalyst purge vent. For cyclic and semi-regenerative units, the initial depressurization and purge vent is often a distinct release point, but the coke burn and final catalyst purge emissions are commonly released at different times during the regeneration cycle from a single atmospheric vent.

The initial depressurization and purge cycle removes the hydrocarbons from the catalyst prior to CRU catalyst regeneration. The vent gases from this initial purge may have high levels of organic HAP such as benzene, toluene, xylene, and hexane. The gases generated from the initial depressurization and purge cycles are typically vented to the refinery fuel gas system or directly to a combustion device (e.g., flare or process heater). The coke burn cycle is typically the largest (in terms of gas volume) emissions source of the overall catalyst regeneration cycle. The primary HAP contained in the CRU coke burn vent are hydrogen chloride (HCl) and chlorine (Cl_2), which are produced when the water formed during combustion leaches chloride atoms from the CRU catalyst. The final purge and reduction cycle removes O_2 and any remaining chlorination agent from the system and reduces the catalyst prior to returning the CRU catalyst to the reforming process or bringing the unit back online. The vent gases from this final purge may have low levels of the chlorinating agent (usually an organic HAP such as trichloroethene or perchloroethene) and residual HCl or Cl_2 remaining in the system. The final purge gases are typically vented into the atmosphere or to the refinery fuel gas system depending on the O_2 content of the purge gases (safety considerations restrict the venting of O_2-containing gases to the refinery fuel gas system).

5.4.1 Emissions Estimation Methodology for Catalytic Reforming Units

Few data are available to characterize the emissions from the CRU catalyst regeneration vent because venting is infrequent, the vent flow rates are slow and usually variable, and the vents have small diameters. All of these factors make traditional source testing difficult. Most of the available data are for HCl and Cl_2 emissions from uncontrolled coke burn vents (20 data points are available for HCl emissions; 10 data points are available for Cl_2). A few data points were available for a limited number of organic chemicals. These data are compiled in the Background Information Document (BID) for the proposed Petroleum Refinery MACT II rule (U.S. EPA, 1998b). During the Petroleum Refinery MACT II project, CARB, with funding assistance from EPA, conducted a source test of a continuous CRU catalyst regenerator coke-burn vent for dioxins/furans, PCBs, and PAHs. The results from this source test, which were not available at the time for inclusion into the Petroleum Refinery MACT II BID, were used to develop emissions factors for these compounds. Additionally, a VOC emissions factor was developed based on test data submitted in response to the EPA's 2011 ICR. The resulting emissions factors for the coke burn emissions are presented in **Table 5-6**. These emissions factors are normalized by the CRU process throughput and are assumed to apply equally for all types of CRU regenerators.

The most prevalent control device used in association with the coke-burn vent is a wet scrubber. The dioxin/furan emissions source tests and the volatile organics were performed on a system controlled by a wet scrubber. Because of the limited solubilities of these chemicals and the scrubbing medium recirculation rate used for wet scrubbers on this vent stream, the scrubber is assumed to have limited effectiveness at reducing the emissions of these chemicals. Therefore, the same emissions factor is recommended for these chemicals for both controlled and uncontrolled CRU. Wet scrubbers are used to reduce the emissions of HCl and Cl_2. The wet scrubbers used for these vents were characterized into two classes: single-stage scrubbers and multiple-stage scrubbers. Single-stage scrubbers are estimated to reduce HCl and Cl_2 emissions by 92%, and the multiple-stage scrubbers are estimated to reduce HCl and Cl_2 emissions by 97%.

As most emissions from the purge cycles are vented to the refinery fuel gas system or a flare, emissions from this source were not covered separately in this section; these emissions are presumably included in the refinery fuel gas combustion sources (process heaters and boilers) or flares emissions estimates. No data are available to characterize the small portion of venting that occurs directly into the atmosphere from these purge cycles, but these emissions should be characterized and reported in the inventory.

Table 5-6. Emissions Factors for CRU Catalyst Regeneration Vent

CAS No.	Chemical Name	Emissions Factor (lb/1,000 bbl)[a]
1746-01-6	Dioxin toxic equivalents (TEQ)[b]	5.7E-09
1336-36-3	Total polychlorinated biphenyls[c]	2.6E-06
91-20-3	Naphthalene	3.5E-05
91-57-6	2-Methylnaphthalene	1.3E-06
208-96-8	Acenaphthylene	3.0E-08
83-32-9	Acenaphthene	4.3E-08
86-73-7	Fluorene	2.0E-07
85-01-8	Phenanthrene	6.1E-07
120-12-7	Anthracene	9.1E-08
206-44-0	Fluoranthene	1.0E-07
129-00-0	Pyrene	1.5E-08
56-55-3	Benzo(a)anthracene	9.0E-10
218-01-9	Chrysene	2.9E-09
205-99-2	Benzo(b)fluoranthene	1.5E-09
207-08-9	Benzo(k)fluoranthene	7.5E-10
192-97-2	Benzo(e)pyrene	2.9E-09
193-39-5	Indeno(1,2,3-c,d)pyrene	1.7E-09
53-70-3	Dibenzo(a,h)anthracene	7.8E-10
191-24-2	Benzo(g,h,i)perylene	4.0E-09
71-43-2	Benzene	0.004
108-88-3	Toluene	0.0096
1330-20-7	Xylene	0.007
VOC	Volatile organic compounds	0.40
7647-01-0	Hydrogen chloride	4.2[d]
7782-50-5	Chlorine	0.23[d]

Notes for Table 5-6.

[a] Emissions factor in pounds pollutant emitted per 1,000 barrels of catalytic reforming unit process capacity.

[b] Dioxin TEQ = toxic equivalents to 2,3,7,8-tetrachloro-dibenzo-p-dioxin used for risk analysis; specific dioxin/furan isomer emissions data are available.

[c] Sum total of all chlorinated biphenyl emissions factors; data were available for each class of chlorinated biphenyls (e.g., mono-, di-, tri-..., decachlorobiphenyl).

[d] Emissions factor for uncontrolled coke burn vent; controlled emissions should be estimated based on the efficiency of the control device for these pollutants. Single-stage scrubbers (including direct caustic injection) are estimated to reduce HCl and Cl_2 emissions by 92%, and the multiple-stage scrubbers are estimated to reduce HCl and Cl_2 emissions by 97%

5.5 Sulfur Recovery Plants

All crude oils contain some sulfur compound impurities. Sulfur compounds in crude oil are converted to H_2S in the cracking and hydrotreating processes of the refinery. The H_2S in the generated gas streams is removed from the process vapors using amine scrubbers. The amine scrubbing solution is subsequently heated to release the H_2S to form an H_2S rich “acid gas” that is treated in the sulfur recovery plant to yield

high-purity sulfur that is then sold as product. Most sulfur recovery plants use the Claus reaction and are commonly referred to as Claus units or Claus sulfur recovery plants. There are a couple of other types of sulfur recovery plants at smaller refineries, but all larger sulfur recovery plants employ Claus units. The exhaust gas from the sulfur recovery unit (SRU) is commonly referred to as "tail gas." The sulfur recovery plant consists of one or more SRU operated in parallel and may also contain one or more catalytic tail gas treatment units and/or a thermal oxidizer to combust the tail gas.

The primary HAP components of the final sulfur plant vent are carbonyl sulfide (COS) and carbon disulfide (CS_2). These HAP components are by-products of the SRU and tail gas treatment unit (TGTU) reactions; COS may also be a product of incomplete combustion from a thermal oxidizer. Unreacted H_2S may also be released during the process. Sulfur recovery plant vents are commonly controlled by a thermal oxider to oxidize unreacted H_2S or H_2S in sweep gas from the sulfur pits to SO_2. Some sulfur recovery plants use reducing controls and thus emit H_2S rather than SO_2. The sulfur plant sour gas feed may also contain small amounts of light organics. Therefore, it is important to account for the hydrocarbons in the sulfur recovery plant feed when estimating emissions from the sulfur recovery plant, particularly from Lo-Cat® or other sulfur recovery plants that may have atmospheric vents without thermal destruction.

When the sulfur recovery plant is in operation, the sulfur plant vent flow rate is fairly small so that the SO_2 emissions from the sulfur recovery plant are also relatively small. If the sulfur recovery plant must be taken offline due to an upset or malfunction, the sour gas may be temporarily directed to a backup sulfur recovery unit or directed to a flare or the thermal oxidizer. If the sour gas in these cases is sent to a flare or thermal oxidizer, the SO_2 emissions can be very large. As such, it is critical to include accurate accounting of SO_2 emissions during startup, shutdown, or malfunction (SSM) events associated with the sulfur recovery plant.

5.5.1 Methodology Ranks 1 and 2 for Sulfur Recovery Plants

It is anticipated that most sulfur recovery plants, particularly Claus sulfur recovery plants, will have continuous SO_2 concentration monitors. When continuous flow monitors are also in place, mass emissions rates can be calculated using the CEMS method previously described in Section 4, *Stationary Combustion Sources*. Unlike combustion sources, however, there is not an F factor method to project the vent flow rate. If the flow rate and H_2S concentration of the feed to the sulfur recovery plant, the air or oxygen feed rates to the sulfur plant burner (used to convert one-third of the H_2S to SO_2), and the quantity of sulfur recovered are known, then calculations to determine/quantify emissions can be made, but the calculations are not trivial. As such, there is not a simple Rank 2 method that can be provided for sulfur recovery plants. Non-Claus sulfur recovery plants may monitor H_2S or reduced sulfur compound concentrations instead of SO_2. Again, H_2S emissions estimates should be provided for sulfur recovery plants.

5.5.2 Methodology Ranks 3 and 4 for Sulfur Recovery Plants

Emissions estimates can be made from inlet flow measurements and assumed recovery efficiencies. For most Claus units, especially those with tail gas treatment/recovery units, a mass balance approach for sulfur is expected to yield emissions estimates with high uncertainties (e.g., when two large numbers are subtracted so that the difference is only a few percentages of the original values, the uncertainties in the original values may be as large as the difference). A three-stage Claus unit is expected to have sulfur recovery efficiencies of 95% to 97%. Combining a three-stage Claus unit with a tail gas treatment unit, sulfur recovery efficiencies are expected to be 99.7% to 99.9%. With these types of recovery efficiencies, the mass balance approach (i.e., calculating SO_2 or other sulfur compound emissions from the difference of the sulfur feed rate to the SRU and the sulfur produced) will have significant uncertainty. Consequently, measurement of the mass feed rate of sulfur to the sulfur recovery plant and an assumed sulfur recovery efficiency (based on the number of Claus reactors in series and the presence or absence of

a tail gas treatment unit) are likely to be more accurate than using a mass balance approach when calculating sulfur compound emissions from the sulfur recovery plant. A similar approach can be used to calculate CO_2 emissions from the sulfur recovery plant, particularly in systems controlled with a flare or thermal oxidizer. Because nearly all of the CO_2 or hydrocarbons introduced to the sulfur recovery plant will exit as CO_2, measuring inlet C content and flow rate of gases to the sulfur recovery plant can be used to accurately estimate CO_2 emissions.

Given the high uncertainty expected in engineering/mass-balance calculations for sulfur recovery plants, site-specific emissions factors may be as or more useful than using an engineering/mass-balance approach for calculating emissions from sulfur recovery plants, particularly sulfur compound emissions. Site-specific emissions factors are also recommended for reductive tail gas treatment units not followed by an incinerator and for non-Claus sulfur recovery plants. Evaluation of light hydrocarbons should be addressed in these systems. For example, Lo-Cat® systems use an oxidation tank in which H_2S is chemically oxidize to SO_2. Any light hydrocarbons entrained in the sour gas are expected to be released in the vent from the oxidation tank. The emissions from this oxidation tank should be characterized and reported for the sulfur recovery plant.

5.5.3 Methodology Rank 5 for Sulfur Recovery Plants

The Petroleum Refinery MACT II BID (U.S. EPA, 1998b) presents a range of total sulfur HAP compounds emissions factors for SRU controlled by an incinerator. Based on the data presented and additional concentration data submitted by the National Petrochemical and Refiners Association, it was assumed that 75% of the sulfur HAP emitted was COS and 25% was CS_2. The controlled emissions factors are based on summary data reported for five SRUs. Emissions of uncontrolled sulfur HAP were estimated assuming a control efficiency of 98% (so that uncontrolled emissions are 50 times higher than controlled emissions). The resulting emissions factors are presented in **Table 5-7**. Data collected as part of the EPA's 2011 ICR for petroleum refineries was reviewed to develop some criteria pollutant emissions factors for sulfur recovery plants. These factors are also presented in Table 5-7.

Table 5-7. Emissions Factors for Sulfur Recovery Plants

CAS No.	Compound Name	Controlled SRU Emissions Factor (lb/lton)[a]	Uncontrolled SRU Emissions Factor (lb/lton)[a]
630-08-0	Carbon monoxide	1.6	
NOx	Nitrogen oxides	0.21	
VOC	Volatile organic compunds	0.053	2.63[b]
43-58-1	Carbonyl sulfide	0.12	5.85[b]
75-15-0	Carbon disulfide	0.040	2.00[b]

Note: lb/lton = pounds per long ton
[a] Emissions factor in pounds of HAP per long-ton of sulfur produced.
[b] Values estimated as 50 times the controlled SRU emissions factor.

5.6 Other Miscellaneous Process Vents

There are many other process vents at a refinery; however, there are limited data for these vents, so default emissions factors are not available. For these process vents, this section provides a brief description of the process, the vent source, and the primary pollutants associated with the process vent. For all of these sources, the general hierarchy of methods as presented in **Table 5-1** in the introduction to this chapter is applicable. For atmospheric vents associated with continuous monitoring systems, the flow rate and composition of the purged gases should be well characterized and emission estimates can be developed using Methodology Rank 1 for process vents. For other process vents, measurement data may not be available. Engineering or model estimates can be used to estimate the uncontrolled emissions. If

the emissions are subsequently controlled, the actual emissions can be estimated based on the efficiency of the control device. The purpose of this section is to provide default emission factors for Methodology Rank 5 for these particular process vents.

5.6.1 Hydrogen Plant Vents

Steam CH_4 reforming is the primary means by which H_2 is produced at a petroleum refinery. Refinery fuel gas is typically used as the feedstock to the H_2 plant. The feedstock is combined with steam in a reactor at high temperatures (750°C to 800°C) to produce a mixture of H_2 and CO. The SMR reaction is endothermic, meaning the reaction requires heat in order to proceed. Therefore, additional natural gas (i.e., natural gas in addition to that used to produce hydrogen) must be supplied to the SMR furnace to provide the necessary heat for the SMR reaction. A water–gas shift (WGS) reaction is then conducted in a second series of catalytic reactors to convert the CO and steam to CO_2 and H_2. Finally, the CO_2 is removed from the H_2 product using either a liquid absorption, membrane filtration, or pressure swing absorption (PSA). There are various H_2 plant vents depending on the configuration of the H_2 plant. The primary vent from the H_2 plant is from the SMR furnace. The PSA off-gas vent is often fed to the SMR furnace, so the PSA off-gas will be combusted and emitted along with combustion furnace emissions from the SMR furnace stack. For units that use liquid adsorption, there is typically a separate high CO_2 vent stack from the regeneration of the adsorption liquid (unless the CO_2 is captured as a byproduct). Condensed water from the water-gas shift reactors is often returned to the boiler feed water system after stripping or deaerating the CO_2 from the water. The deaerator vent typically contains methanol and hydrocarbons; however, no default emission factors are available at this time for the hydrogen plant vent deaerator vent. The deaerator vent may also be directed to the SMR furnace for hydrocarbon emissions control. After review of data obtained from the EPA's 2011 ICR, a NOx emissions factor of 0.081 lb/MMBtu was developed for the SMR furnace.

5.6.2 Asphalt Plant Vents

Asphalt blowing is used for polymerizing and stabilizing asphalt to improve its weathering characteristics. Air-blown asphalts are used in the production of asphalt roofing products and certain road asphalts. Air blowing of asphalt may be conducted at petroleum refineries, asphalt processing plants, and asphalt roofing plants. Asphalt blowing involves the oxidation of asphalt flux by bubbling air through liquid asphalt flux at 260°C (500°F) for 1 hour to 10 hours. The amount of time depends on the desired characteristics of the product, such as the softening point and the penetration rate. Shorter periods are typically used for road asphalt; longer periods are used for roofing asphalt. Asphalt blowing results in an exothermic reaction that requires cooling. The emissions from a blowing still are primarily organic particulate with a fairly high concentration of gaseous hydrocarbon and polycyclic organic matter. The blowing still gas is commonly controlled with a wet scrubber to remove sour gas, entrained oil, particulates, and condensable organics and/or a thermal oxidizer to combust the hydrocarbons and sour gas to CO_2 and SO_2.

Overall PM and TOC emissions factors for asphalt blowing are provided in Section 11.2 of AP-42 (U.S. EPA, 1995a); these emission factors are also presented here in **Table 5-8**.

Tumbore (1998) provided an additional summary and evaluation of emissions from controlled asphalt blowing. Some key findings from this review were:

- The AP-42 emission factors ignore emissions of SO_2, which are usually the largest emissions from the process. For gas fired control systems, H_2S resulting from the asphalt blowing reaction accounted for 70 to 80 % of the SO_2 emissions, with the remainder attributable to entrained or condensed oil.
- The AP-42 emission factors ignore emissions of HCl, which are important when ferric chloride is used as a catalyst in the process.

Table 5-8. Emission Factors for Asphalt Blowing (U.S. EPA, 1995a)

Operation	Filterable PM[a]	TOC[b]
	Emission Factor (Data Quality Rating) (lb/ton asphalt processed)	
Uncontrolled		
Saturant asphalt [c]	6.6 (E)	1.3 (E)
Coating asphalt [d]	24 (E)	3.4 (E)
Controlled		
Saturant asphalt [c]	0.27 (D)	0.0043 (D)
Coating asphalt [d]	0.81 (D)	0.017 (D)

[a] Filterable (front-half) particulate matter catch using EPA Method 5A sampling at 108°F.
[b] Total organic compounds measured using EPA Method 25A.
[c] Saturant blow of 1.5 hours.
[d] Coating blow of 4.5 hours.

Tumbore (1998) provided an additional summary and evaluation of emissions from controlled asphalt blowing. Some key findings from this review were:

- The AP-42 emission factors ignore emissions of SO_2, which are usually the largest emissions from the process. For gas fired control systems, H_2S resulting from the asphalt blowing reaction accounted for 70 to 80 % of the SO_2 emissions, with the remainder attributable to entrained or condensed oil.
- The AP-42 emission factors ignore emissions of HCl, which are important when ferric chloride is used as a catalyst in the process.

The *Emission Inventory Guidebook 2006* (EMEP/CORINAIR, 2006) provides the following speciation profile for organic emissions from asphalt blowing (see **Table 5-9**). Although not specified, it is assumed that this speciation profile in **Table 5-9** represents uncontrolled asphalt blowing emissions.

Table 5-9. Asphalt Blowing – Nonmethane Volatile Organic Compounds Speciation[a]

Compound	% Weight
Ethane	6.0
Propane	18.8
Butanes	30.5
Pentanes	17.2
Hexanes	8.4
Heptanes	9.8
Octanes	7.4
Cycloparaffins	1.9
Benzene	0.1

[a] As reported by EMEP/CORINAIR, 2006.

In addition, API and the Western States Petroleum Association (WSPA) conducted emissions source tests of petroleum refining sources and have compiled emissions factors for controlled asphalt blowing (Hansell and England, 1998). The average emissions factors are presented in **Table 5-10**. These factors are recommended for estimating speciated emissions from controlled asphalt blowing units.

Table 5-10. Summary of Emissions Factors for Controlled Asphalt Blowing

CAS Number	Substance	Mean Emissions Factor[a]			
		With Blow Cycle and Thermal Oxidizer (lb/MMcf)[b]	With Blow Cycle and Thermal Oxidizer (lb/MMBtu)[b]	Without Blow Cycle and with Thermal Oxidizer (lb/MMcf)[b]	Without Blow Cycle and with Thermal Oxidizer (lb/MMBtu)[b]
75-07-0	Acetaldehyde	1.8E-03	1.67E-06	4.3E-03	4.1E-06
7440-28-2	Arsenic	***1.3E-02***	***1.2E-05***	***1.2E-02***	***1.1E-05***
71-43-2	Benzene	***3.2E-01***	***3.0E-04***	***2.8E-01***	***2.6E-04***
7440-41-7	Beryllium	***2.6E-03***	***2.5E-06***	***2.3E-03***	***2.2E-06***
7440-43-9	Cadmium	***5.3E-03***	***4.9E-06***	***4.7E-03***	***4.4E-06***
18540-29-9	Chromium (hexavalent)	3.2E-03	3.0E-06	***3.3E-03***	***3.1E-06***
7440-47-3	Chromium (total)	4.2E-02	3.9E-05	***1.4E-02***	***1.3E-05***
7440-50-8	Copper	4.8E-02	4.5E-05	3.8E-02	3.6E-05
100-41-4	Ethylbenzene	***8.6E-01***	***8.1E-04***	***7.6E-01***	***7.2E-04***
50-00-0	Formaldehyde	3.6E-03	3.3E-06	1.3E-02	1.2E-05
7647-01-0	Hydrogen chloride	2.2E-03	2.1E-06	8.2E-04	7.7E-07
7783-06-4	Hydrogen sulfide	***2.1E+00***	***2.0E-03***	***1.8E+00***	***1.7E-03***
7439-92-1	Lead	***5.3E-02***	***4.9E-05***	***4.7E-02***	***4.4E-05***
7439-96-5	Manganese	1.2E-01	1.2E-04	2.1E-01	2.0E-04
7439-97-6	Mercury	9.1E-03	8.5E-06	8.5E-03	8.0E-06
7440-02-0	Nickel	***6.7E-02***	***6.3E-05***	***6.0E-02***	***5.7E-05***
108-95-2	Phenol	7.6E-02	7.1E-05	4.6E-02	4.4E-05
7782-49-2	Selenium	***1.3E-02***	***1.2E-05***	***1.2E-02***	***1.1E-05***
1330-20-7	Xylene (total)	***8.6E-01***	***8.1E-04***	***7.6E-01***	***7.2E-04***
7440-66-6	Zinc	8.4E-01	7.9E-04	5.4E-01	5.0E-04

Note: lb/MMcf = pounds per million cubic feet asphalt fumes, lb/MMBtu = pounds per million British thermal units
[a] Bold italic values indicate that all test runs were below detection limit.
[b] Source: Hansell and England, 1998.

5.6.3 Coke Calcining

Coke calcining is one of the processes tested by API and WSPA for which emissions factors were developed (Hansell and England, 1998). The average emissions factors for a coke calcining unit controlled with a spray dryer and fabric filter are presented in **Table 5-11**.

Table 5-11. Summary of Emissions Factors for Controlled Coke Calcining

CAS Number	Substance	Mean Emissions Factor[a]	
		lb/ton coke[b]	lb/MMBtu[b]
83-32-9	Acenaphthene	1.5E-08	4.4E-08
208-96-8	Acenaphthylene	1.8E-08	5.6E-08
75-07-0	Acetaldehyde	1.0E-03	3.1E-03
107-02-8	Acrolein	***3.4E-04***	***1.0E-03***
120-12-7	Anthracene	1.8E-08	5.4E-08
7440-36-0	Antimony	4.6E-05	1.4E-04
7440-28-2	Arsenic	***4.7E-06***	***1.5E-05***
7440-39-3	Barium	2.0E-05	6.1E-05
71-43-2	Benzene	3.2E-04	1.0E-03
56-55-3	Benzo(a)anthracene	8.7E-09	2.6E-08
50-32-8	Benzo(a)pyrene	***8.1E-09***	***2.4E-08***
205-99-2	Benzo(b)fluoranthene	***8.1E-09***	***2.4E-08***
191-24-2	Benzo(g,h,i)perylene	***8.1E-09***	***2.4E-08***
207-08-9	Benzo(k)fluoranthene	***8.1E-09***	***2.4E-08***
7440-41-7	Beryllium	1.9E-06	6.0E-06
7440-43-9	Cadmium	***9.3E-06***	2.9E-05
18540-29-9	Chromium (hexavalent)	6.3E-07	2.1E-06
7440-47-3	Chromium (total)	2.1E-05	6.9E-05
218-01-9	Chrysene	1.3E-08	3.7E-08
7440-50-8	Copper	***9.3E-06***	***2.9E-05***
53-70-3	Dibenz(a,h)anthracene	***8.1E-09***	***2.4E-08***
1746-01-6	Dioxin:4D 2378	***1.1E-11***	***3.7E-11***
	Dioxin:4D Other	1.4E-10	4.4E-10
40321-76-4	Dioxin:5D 12378	***9.6E-12***	***2.9E-11***
	Dioxin:5D Other	8.5E-11	2.7E-10
39227-28-6	Dioxin:6D 123478	9.9E-12	3.5E-11
57653-85-7	Dioxin:6D 123678	1.4E-11	4.4E-11
19408-74-3	Dioxin:6D 123789	1.3E-11	4.2E-11
	Dioxin:6D Other	6.4E-11	2.1E-10
35822-46-9	Dioxin:7D 1234678	1.4E-10	4.2E-10
	Dioxin:7D Other	1.3E-10	4.1E-10
3268-87-9	Dioxin:8D	1.8E-09	5.3E-09
206-44-0	Fluoranthene	3.6E-08	1.1E-07
86-73-7	Fluorene	5.6E-08	1.7E-07
51207-31-9	Furan:4F 2378	1.3E-11	4.2E-11

(continued)

Table 5-11. Summary of Emissions Factors for Controlled Coke Calcining (continued)

CAS Number	Substance	Mean Emissions Factor[a]	
		lb/ton coke[b]	lb/MMBtu[b]
	Furan:4F Other	1.4E-10	4.4E-10
57117-41-6	Furan:5F 12378	1.4E-11	4.4E-11
57117-31-4	Furan:5F 23478	1.3E-11	4.1E-11
	Furan:5F Other	1.2E-10	3.8E-10
70648-26-9	Furan:6F 123478	2.4E-11	7.9E-11
57117-44-9	Furan:6F 123678	2.2E-11	7.1E-11
72918-21-9	Furan:6F 123789	9.2E-12	3.0E-11
60851-34-5	Furan:6F 234678	2.0E-11	6.5E-11
	Furan:6F Other	1.5E-10	4.8E-10
67562-39-4	Furan:7F 1234678	1.5E-10	4.8E-10
55673-89-7	Furan:7F 1234789	2.6E-11	8.0E-11
	Furan:7F Other	5.2E-11	1.8E-10
39001-02-0	Furan:8F	1.5E-10	4.1E-10
193-39-5	Indeno(1,2,3-cd)pyrene	***8.1E-09***	***2.4E-08***
7439-92-1	Lead	6.2E-05	1.9E-04
7439-96-5	Manganese	4.6E-05	1.4E-04
7439-97-6	Mercury	4.6E-05	1.5E-04
91-20-3	Naphthalene	2.4E-06	7.3E-06
7440-02-0	Nickel	9.1E-05	2.9E-04
85-01-8	Phenanthrene	1.9E-07	5.7E-07
7723-14-0	Phosphorus	***4.7E-04***	***1.5E-03***
129-00-0	Pyrene	2.7E-08	7.9E-08
7782-49-2	Selenium	***4.7E-06***	***1.5E-05***
108-88-3	Toluene	5.3E-05	1.6E-04
1330-20-7	Xylene (m,p)	3.1E-05	8.9E-05
95-47-6	Xylene (o)	***4.5E-05***	***1.3E-04***
7440-66-6	Zinc	1.2E-04	3.7E-04

Note: lb/ton coke = pounds per ton of petroleum coke, lb/MMBtu = pounds per million British thermal units

Abbreviations: 4D 2378 = 2,3,7,8-Tetrachlorodibenzo-p-dioxin; 5D 12378 = 1,2,3,7,8-Pentachlorodibenzo-p-dioxin; 6D 123478 = 1,2,3,4,7,8-Hexachlorodibenzo-p-dioxin; 6D 123678 = 1,2,3,6,7,8-Hexachlorodibenzo-p-dioxin; 6D 123789 = 1,2,3,7,8,9-Hexachlorodibenzo-p-dioxin; 7D 1234678 = 1,2,3,4,6,7,8-Heptachlorodibenzo-p-dioxin; 8D = Octachlorodibenzo-p-dioxin; 4F 2378 = 2,3,7,8-Tetrachlorodibenzofuran; 5F 12378 = 1,2,3,7,8-Pentachlorodibenzofuran; 5F 23478 = 2,3,4,7,8-Pentachlorodibenzofuran; 6F 123478 = 1,2,3,4,7,8-Hexachlorodibenzofuran; 6F 123678 = 1,2,3,6,7,8-Hexachlorodibenzofuran; 6F 123789 = 1,2,3,7,8,9-Hexachlorodibenzofuran; 6F 234678 = 2,3,4,6,7,8-Hexachlorodibenzofuran; 7F 1234678 = 1,2,3,4,6,7,8-Heptachlorodibenzofuran; 7F 1234789 = 1,2,3,4,7,8,9-Heptachlorodibenzofuran; 8F = Octachlorodibenzofuran.

[a] Emissions factors provided are for coke calcining controlled with a spray dryer and fabric filter. Bold italic values indicate that all test runs were below detection limit; underlined values indicate that more than 75% of the test runs were below the detection limit.

[b] Source: Hansell and England, 1998.

5.6.4 Blowdown Systems

Blowdown systems are used during depressurization processes to recover liquids entrained in a process gas stream. The remaining uncondensed gases may be compressed and recovered for use as fuel gas or they may be vented to a thermal destruction device (thermal oxidizer or flare). Either of these scenarios would be considered a "controlled" blowdown system. In an "uncontrolled" blowdown system, the uncondensed gases are vented directly to the atmosphere. For blowdown gases that are recovered as fuel gas, the emissions from these gases would be accounted for in the emissions projected for stationary combustion devices (see Section 4). For blowdown gases that are vented to a flare, the emissions from these gases would be accounted for in the emissions projected for flares if Methodology Rank 1, 2, 3, or 4 for flares is used (see Section 6).

AP-42 (U.S. EPA, 1995a) contains default emission factors for uncontrolled blowdown systems as well as blowdown systems that recover the vapors for destruction in a flare. For systems controlled by a flare, the measurement methodologies provided in Section 6, *Flares*, should be used preferentially over these default emission factors, but these factors may provide an estimate of the portion of the flare's emissions originating from blowdown gases. The AP-42 default emission factors for blowdown systems are provided in **Table 5-12**. For blowdown gases that are vented to control device other than a flare, use the methodologies for direct process vent measurement provided in this section, if appropriate data are available. If appropriate data are not available, use the emission factors for "blowdown systems with vapor recovery and flaring" in **Table 5-12** for blowdown vents controlled with a thermal oxidizer, catalytic oxidizer, or similar combustion control system; for other control systems, use the uncontrolled blowdown default THC emissions factor provided in **Table 5-12** and adjust for the efficiency of the control device using the default control efficiencies provided in **Table 3-2** (Section 3, *Storage Tanks*).

Table 5-12. Default Emissions Factors for Blowdown Systems

Process Description	Pollutant	Emissions Factor[a] (lb/10^3 barrel of refinery feed)	Rating
Uncontrolled blowdown	Total hydrocarbons[b]	580	C
Blowdown System with vapor recovery and flaring	Carbon monoxide	4.3	C
	Nitrogen oxides	19	C
	Sulfur dioxide	27	C
	Total hydrocarbons[b]	0.8	C

[a] Source: U.S. EPA, 1995a.
[b] Total hydrocarbon may be estimated as a surrogate for VOC. (Overall, less than 1 weight % of total hydrocarbon emissions is methane.)

5.6.5 Vacuum Producing Systems

Vacuum producing systems include reciprocating, rotary or centrifugal blowers or compressors, or any jet ejector or device that takes suction from a pressure below atmospheric and discharges against atmospheric pressure. Depending on the vacuum producing system design, gases from the system may be released directly to the atmosphere or may be condensed, to the extent possible, using a condenser. The condensed liquid is gathered in a "hot well" or "accumulator" and the uncondensed gases are discharged to a control device or directly to the atmosphere. The vacuum producing system associated with the vacuum distillation of crude oil is typically the largest vacuum producing system at a petroleum refinery; vacuum producing systems may also be used to evacuate reactor vessels or vacuum trucks. AP-42 provides a total hydrocarbon emission factor for the vacuum distillation column condenser, which is provided in **Table 5-13**. Speciation of the gases can be estimated based on the composition in the condensed liquids

and assuming the gases are saturated (in equilibrium) with the condensed liquid. If the emissions are controlled, a control device efficiency correction can be used to estimate the controlled emissions.

Table 5-13. Default Emissions Factor for Vacuum Producing Systems

Process Description	Pollutant	Emissions Factor[a] (lb/10^3 barrel of vacuum feed)	Rating
Vacuum producing system on vacuum distillation column, uncontrolled	Total hydrocarbons[b]	50	C

[a] Source: U.S. EPA, 1995a.

[b] Total hydrocarbon may be estimated as a surrogate for VOC. (Overall, less than 1 weight % of total hydrocarbon emissions is methane.)

6. Flares

Flares are point sources used at petroleum refineries to destroy organic compounds in excess refinery fuel gas, purged products, or waste gases released during startups, shutdowns, and malfunctions. Most flares have a natural gas pilot flame and use the fuel value of the gas routed to the flare to sustain combustion. If the heating value of the flare gas falls below certain values (for steam or air assisted flares, typically 300 British thermal units per standard cubic feet [Btu/scf]), then natural gas may be added to the flare gas to maintain the appropriate heating value for good combustion. Emissions from flares consist of a fraction of the hydrocarbons in the flare gas (e.g., CH_4, CO, VOC, and specific organic HAP) that are not combusted in the flare; SO_2 resulting from the oxidation of sulfur compound impurities, such as H_2S, in the gas stream; and CO_2 from the combustion process. Flares are also expected to produce NO_x emissions and may produce PM (soot) if combustion conditions are not adequate. A complete emissions inventory will include estimates for all these compounds (the specific organic HAP will vary based on the composition of the gas being flared).

Accurate estimates of emissions from flares are difficult to obtain because they do not lend themselves to conventional emissions-testing techniques, and only a few attempts have been made to characterize flare emissions. Therefore, to date, there are limited direct emissions test data for flares. Recent developments in testing protocols, such as the DIAL technique, provide a direct emissions measurement technique for flares. However, DIAL measurements provide only a snapshot in time. Unless the flow and composition of the flare gas is highly stable, inaccuracies build as these measurements are extrapolated to annual emission rates. Continuous monitoring of the gas stream prior to combustion in the flare is generally the most accurate means of assessing flare emissions. One difficulty with this approach is that flare gas composition and flow are highly variable, and the monitors are calibrated to detect compositions or flows within a certain range or span, so if the flow or composition is outside the instrument's range, then inaccuracies in the measurement data result. In addition, because the monitors are evaluating the stream of gas going to the flare, assumptions must be made regarding flare efficiency to determine the emissions following combustion. Engineering calculations are another methodology that can be used to assess certain release events. For example, if a pressure relief valve on a tank opens, then the volume of gas released can be calculated based on the pressure inside the tank, the pressure outside the tank, the cross-sectional area of the valve opening, and the duration the valve is open (see Section 12, *Malfunctions/Upsets*, in this Refinery Emissions Protocol document. Product knowledge of the tank liquid composition can be used to calculate the equilibrium vapor space composition, which is assumed to be the composition of the gas vented. Some emission factors are available, but these have high uncertainty. EPA concludes that direct measurement methods are best used to develop site- or flare-specific emission factors or to verify the combustion efficiency of a specific flare under certain conditions; however, they are not particularly useful in developing an emissions inventory for flares.

Table 6-1 summarizes the hierarchy of flare emissions estimation techniques. Within a given measurement method (or rank), there may be alternative methods for determining the constituent-specific emissions; these compositional analysis methods are provided in order of accuracy. Each refinery will likely use a mixture of different methods. For example, Methodology Rank 1 for flares may be used for events that are directly monitored and are fairly routine releases, but Methodology Rank 4 for flares may have to be used to estimate emissions for unusual events. The remainder of this section provides additional detail and guidance regarding the implementation of these methods.

Table 6-1. Summary of Flare Emissions Estimate Methodologies

Rank	Measurement Method	Additional Data Needed
1	Continuous composition monitoring (or manual sampling at least once every 3 hours during flaring events) and continuous flow rate monitoring of the gas sent to the flare	▪ Combustion efficiency (based on results of a direct measurement test, if available, or a default assumption)
2	Continuous flow rate monitoring and daily or weekly compositional analysis	▪ Representative sample (grab or integrated) ▪ Assumed combustion efficiency
3	Continuous flow rate and heating value monitoring	▪ Emission factors based on heating value
4	Engineering calculations	▪ Process knowledge of units connected to flare (e.g., volume, composition of process streams) ▪ Temperature and pressure monitoring data or other process operating data as needed ▪ Assumed combustion efficiency
5	Emission factors based on energy consumption	▪ Flow estimates (not continuous) ▪ Heat value estimates (not continuous)
6	Default emission factors based on refinery or process throughput	▪ Refinery or process throughput

6.1 Methodology Rank 1 for Flares

Methodology Rank 1 for flares includes continuously measuring composition and flow of gas sent to the flare. For flares that do not have routine flow, manual sampling of the flare gas at least once every 3 hours during each flaring event is also considered Methodology Rank 1 for flares. For a flare, the most likely pollutants to be estimated using Methodology Rank 1 are SO_2 and total hydrocarbons (or VOC). For example, a reduced sulfur or total sulfur monitor can be used to characterize the sulfur content of the gas being combusted in the flare. Similarly, monitoring of the total hydrocarbon, VOC, or specific organic HAP content in the flare gas can be used to assess the emissions of these pollutants. However, because these monitors measure the concentrations in the gas sent to the flare rather than the gas exiting the flare, the other piece of information needed to estimate emissions from the flare is the flare efficiency (F_{eff}). For the example of sulfur content above, the portion of the sulfur that is oxidized to SO_2 emissions during the combustion of the flare gas will be dependent on the combustion efficiency. For emissions of compounds that are emitted as a result of incomplete combustion, such as reduced sulfur compounds and uncombusted hydrocarbons, one minus the assumed flare efficiency ($1-F_{eff}$) is used to estimate the emission rate.

As noted above, direct measurement methods are available and can be used to confirm the efficiency of a flare. If efficiency information is available for a specific flare at a refinery under certain conditions, that information should be used to estimate emissions for that flare where appropriate. For other flares, Section 13.5 of *Compilation of Air Pollutant Emission Factors* notes that the flare combustion efficiency for properly operated flares is at least 96.5%, which is equivalent to a destruction efficiency of 98% (U.S. EPA, 1995a). It is important to note that only flares that operate consistent with the criteria of 40 CFR 60.18 should be assumed to be "properly operating" and achieving 98% destruction efficiency. It should also be noted that recent efforts to better characterize flare emissions include efforts to determine whether this combustion efficiency continues to be appropriate for properly operated flares. At this time, sufficient data have not yet been collected and evaluated to support revising this efficiency estimate.

Most gas composition monitors measure the concentration on a volume basis (and generally on a dry basis), although some will provide the concentration on a mass basis. Most flow monitors measure

volumetric flow rate in actual cubic feet. Many flow monitoring systems are equipped with temperature and pressure monitors to automatically convert the flow to standard conditions. If the gas composition is determined on a dry basis, which is typical for extractive monitoring systems, then it is important to also correct the flow to be on a dry basis. The total volumetric flow of the pollutant can be converted to a mass emission rate using the molecular weight of the pollutant and/or the ideal gas law, as appropriate. An emissions estimate can be calculated using Equation 6-1, which is a variation of Equation 4-1 for CEMS:

$$E_i = \sum_{n=1}^{N}\left((Q)_n \times \left[1-(f_{H20})_n\right] \times \left(\frac{T_o}{T_n}\right) \times \left(\frac{P_n}{P_o}\right) \times K_{eff} \times \frac{(C_i)_n}{100\%} \times \frac{MW_i}{MVC} \times K \right) \qquad \text{(Eq. 6-1)}$$

where:

E_i = Emission rate of pollutant "i" (tons per year [tons/yr] or tons per event [tons/event]).
N = Number of measurement periods per year or per event (e.g., for hourly measurements, N = 8,760 to calculate annual emissions).
n = Index for measurement period.
$(Q)_n$ = Volume of gas sent to the flare for measurement period "*n*" (actual cubic feet [acf]). If the flow rate meter automatically corrects for temperature and pressure, then replace "$(T)_o \div (T)_n \times (P)_n \div (P)_o$" with "1." If the pollutant concentration is determined on a dry basis and the flow rate meter automatically corrects for moisture content, replace the term $[1-(f_{H20})_n]$ with 1.
$(f_{H2O})_n$ = Moisture content of exhaust gas during measurement period "n," volumetric basis (cubic feet water per cubic feet exhaust gas).
T_o = Temperature at "standard conditions" (520 °R or 528 °R).
T_n = Temperature at which flow is measured during measurement period "n" (°R).
P_n = Average pressure at which flow is measured during measurement period "n" (atm).
P_o = Average pressure at "standard conditions" (1 atm).
K_{eff} = Factor to account for the efficiency of the flare. K_{eff} is equal to the flare efficiency F_{eff} for pollutants created by combustion, such as SO_2. K_{eff} is equal to one minus the flare efficiency $(1 - F_{eff})$ for pollutants in uncombusted gas, such as VOC, reduced sulfur, and specific HAP.
$(C_i)_n$ = Concentration of pollutant "i" or the appropriate precursor to pollutant "i" in the gas sent to the flare for measurement period "n" (volume %, dry basis). If the pollutant concentration is determined on a wet basis, then replace the term $[1-(f_{H20})_n]$ with 1.
MW_i = Molecular weight of pollutant "i" (kilogram per kilogram mole [kg/kg-mol]).
MVC = Molar volume conversion factor (standard cubic feet per kilogram mole [scf/kg-mol])
= 836.6 scf/kg-mol at "standard conditions" of 60°F (520°R) and 1 atmosphere (atm)
= 849.5 scf/kg-mol at "standard conditions" of 68°F (528°R) and 1 atm.
K = Conversion factor = 2.2046/2,000 (tons per kilogram [tons/kg] = 0.0011023 tons/kg.

As explained in Section 4-1, a continuous monitor records multiple measurements per hour, and the individual measurements can be used to calculate annual emissions in two ways. For a flare, the selection of an hourly average approach or heavier reliance on individual measurements will depend on the duration of the flare's operation (particularly for flares that operate only intermittently) and the process unit generating the gas being flared.

6.2 Methodology Rank 2 for Flares

Methodology Rank 2 for flares includes continuous monitoring of flare gas flow as in Methodology Rank 1 for flares and routine (daily or weekly) sampling and analysis to determine the composition of the flare gas. Methodology Rank 2 also includes determining composition by continuously monitoring a "surrogate" component, and then using sampling or other data to periodically check a correlation between

the surrogate and the pollutant. For a flare, the most likely pollutants to be estimated using Methodology Rank 2 for flares are SO_2 and specific HAP. A continuous monitor for H_2S can be used to estimate SO_2 emissions similar to the process described for Methodology Rank 1, but because H_2S is only one of several sulfur compounds potentially present in the flare gas, it is important to periodically characterize the total sulfur content of the gas so as not to underestimate SO_2 emissions from the flare. For example, periodic sampling of the flare gas can be performed to determine the total sulfur content of the flare gas, which can be used in conjunction with the H_2S monitoring data to determine an average total sulfur-to-H_2S ratio of the flare gas. This average total sulfur-to-H_2S ratio, expressed in SO_2 equivalence, can be used to adjust the H_2S concentration measured by the continuous monitor to provide a more accurate and complete assessment of SO_2 emissions from the flare. Similarly, sampling can be used to determine the relative concentration of specific HAP present in the flare gas. These sampling data can be used in conjunction with total hydrocarbon monitoring data to estimate HAP emissions from the flare. As with the Methodology Rank 1 for flares, the generation or destruction of pollutants in the flare will depend on the flare combustion efficiency. As mentioned previously, the current default flare combustion efficiency for properly operating flares is 96.5 %, which correlates to a destruction efficiency of 98% (U.S. EPA, 1995a).

6.3 Methodology Rank 3 for Flares

Methodology Rank 3 for flares includes continuous monitoring of flare gas flow as in Methodology Rank 1 for flares, continuous monitoring of the heating value of the fuel, and emission factors based on the heating value. The most likely pollutants estimated using Methodology Rank 3 for flares are CO, NO_x, VOC. A general equation for Methodology Rank 3 for flares is as follows:

$$E_i = \sum_{n=1}^{N} \left(Q_{std,n} \times LHV_n \times EF_i \right) \qquad \text{(Eq. 6-2)}$$

where:

E_i = Emission rate of pollutant "i" (lbs/yr or lbs/event).
N = Number of measurement periods per year or per event (e.g., for hourly measurements, N = 8,760 to calculate annual emissions).
n = Index for measurement period.
$Q_{std,n}$ = Volume of gas sent to the flare for measurement period "n" (scfm). If the flow meter does not output flow at "standard conditions," the $Q_{std,n}$ can be calculated using the first four terms within the summation of Equation 6-1. Note: the "standard conditions" used for the volume of gas must match the "standard conditions" at which the heating value of the gas is determined.
LHV_n = Heating value of gas being flared during measurement period "n" on a lower heating value (LHV) basis (MMBtu/scf). (Heating value for flares is usually determined on a lower (net) heating value (LHV) basis whereas heating value for process heaters and boilers are usually determined on a higher heating value basis.)
EF_i = Emission factor for pollutant "i" (lb/MMBtu).

Values for "EF_i" are presented in **Tables 6-2** and **6-3** below. It is important to note that both sets of emission factors are intended for use with properly operating flares meeting the criteria of 40 CFR 60.18; therefore, the flare efficiency is already included in these emission factors. It is also important to note that the number of components for which emission factors are available is limited because these emission factors are based on general combustion characteristics and limited emission tests. For example, the emission factors for NO_x are generally based on the amount of nitrogen in the air during combustion, so if there are constituents containing nitrogen in the fuel gas, such as ammonia, additional calculations are

needed to account for all NO_x emissions (based on Methodology Rank 2 for flares, particularly if flow rate is monitored continuously.)

The emission factors in Table 6-2 are values being proposed for Section 13.5 of EPA's *Compilation of Air Pollutant Emission Factors* (U.S. EPA, 1995a, also known as AP-42) based on recent testing of flare performance using passive Fourier transform infrared spectroscopyspectroscopy and DIAL, as well as considering data from previous EPA testing on flares. These emission factors should be used with LHV heat content measurements.

Table 6-2. Flare Energy Consumption-Based Emission Factors[a]

Pollutant	Emission Factor[a] (lb/10^6 Btu, LHV basis)	Representativeness
Volatile organic carbon	0.55	Moderately
Carbon monoxide (CAS No. 630-08-0)	0.34	Moderately
Nitrogen oxides	2.9	Moderately

[a] Proposed emissions factors for Section 13.5 of EPA's AP-42 (U.S. EPA, 1995a)

Additional emission factors for soot (i.e., PM) are also provided AP-42; however, the soot factors provided in units of concentration in the flare exhaust stream. These factors have been converted to heating value-based factors to allow calculation of soot (PM) emissions using Equation 6-2. To calculate the soot (PM) emissions from flares, each measurement period would be assigned a flare operation category based on the amount of smoke generated by the flare during that measurement period, so the appropriate emission factor could be applied. It should be assumed that all flare soot is fine PM ($PM_{2.5}$-FIL).

Table 6-3. Emission Factors for Soot from Flares

Flare Operation	Emission Factor[a] (µg/L in exhaust)	Emission Factor[b] (lb/MMBtu, LHV basis)
Nonsmoking flares	0	0.0
Lightly smoking flares	40	0.027
Average smoking flares	177	0.12
Heavily smoking flares	274	0.19

[a] Source: U.S. EPA, 1995a; reported as micrograms per liter (µg/L) in flare exhaust.
[b] Calculated from concentration using F-factor method on a dry basis, assuming 3% O_2 in exhaust gas stream.

Example 6-1: Calculation of CO Emissions from a Flare with Continuous Monitors for Flow Rate and Heating Value

Calculate hourly emissions from a refinery flare given:

- The flaring event is from one source at the refinery and lasts several hours, so emissions can be estimated using the hourly average flow rate and heat content measurements
- The average flow rate to the flare during a certain hour is 250 scfm
- The higher heating value of the flow to the flare during that hour is 1200 Btu/scf, or 1.2E-03 MMBtu/scf (1200 Btu/scf × 1E-06Btu/MMBtu)

Calculate hourly emissions using Equation 6-2:

$$E_{CO} = \sum_{n=1}^{N} \left(HV_n \times FR_n \times M_N \times EF_{CO} \right)$$

$$E_{CO} = (1.2E\text{-}03) \times (250) \times (60) \times (0.34)$$

$$E_{CO} = 6.1 \text{ lbs/hr}$$

If the flaring event lasts 3 hours, and the flow rate and heat content remained perfectly constant over those 3 hours, then the total emissions for that flaring event would be 6.1 lbs/hr × 3 hours = 18.3 lbs. Annual emissions for the flare would be calculated as the sum of emissions estimates for all events.

6.4 Methodology Rank 4 for Flares

Methodology Rank 4 for flares includes a variety of estimation methods based on engineering calculations. Estimates of nearly all pollutants from flares can be calculated using this rank based on process knowledge of units connected to the flare, including process unit volume, process stream compositions, temperature, and pressure. Any of this information used in conjunction with periodic sampling also constitutes Methodology Rank 4. The specific methods used will vary based on the ways in which the flare is used and the units the flare serves. Estimating emissions from flares with routine flow, such as those used for controlling blowdown from delayed coking units or other routine discharges, may rely on key process operating parameters that can be defined in advance. For process upsets or malfunctions, the estimation methods used may be very event-focused and are likely to rely on engineering judgment as much as actual monitoring data. Estimation methods may also be needed from flares with monitoring systems when an upset or malfunction causes the concentration or flow to exceed the calibrated span of the monitor. A few examples are described in this section, but many others are possible, given the complexity of refineries and differences between them. When emissions are estimated using Methodology Rank 4 for flares, a description of the methodology, assumptions, and specific pieces of data should be recorded and kept for future reference, both to document the emissions calculation methodology and to ensure consistency from one estimate to the next for a particular process.

For routine or planned releases from flares not equipped with a continuous monitor, the refiner should know the quantity and composition of the gas being released. If the gas is excess fuel gas that has been amine-treated and mixed in a central drum, then the H_2S concentration of the gas being flared should be the same as the concentration going to any fuel gas combustion device (e.g., process heater, boiler) at the refinery. (As noted previously, it is important to note that H_2S may not be the only reduced sulfur compound contributing to SO_2 emissions.) Alternatively, if a fuel gas combustion device has an instrument for measuring SO_2 emissions, then the SO_2 emissions from the flare can be calculated based on

the quantities of gas being combusted in the fuel gas combustion device and the flare. If the efficiency of that fuel gas combustion device and the flare are not the same, then an efficiency correction may be needed. (This method would account for all sulfur from the flare since SO_2 emissions would be measured directly.) As another example, if a refiner is emptying a tank and combusting the vapors, VOC and HAP emissions can be calculated based on the composition of the tank contents and the size of the tank.

For emergency flares and flares with flare gas recovery systems (or otherwise equipped with water seals intended to prevent gases from going to the flare during normal operations), an alternative method of estimating flow rate for non-routine flaring events is to monitor the pressure drop across the flare water seal drum. A limited number of flow measurements can be made at different flare gas and water seal differential pressures (or water heights) to develop a flow rate correlation with the measured pressure drop. The water seal differential pressure or water height is routinely measured to determine the flow to the flare. Alternatively, the pressure in the flare line can also be monitored using a direct pressure monitor installed at the final liquid knock-out drum prior to the water seal. Concentrations of specific compounds are estimated by sampling and analysis of the flare gases (preferred, if possible) or calculations based on the composition of the gases in the process unit(s) contributing to the flaring event. Emissions are then calculated using those concentrations, the calculated flow rate, and an assumed flare efficiency. Some refiners that use this method for flares with a flare gas recovery system also monitor the recovery system to ensure that gases are not sent to the flare during normal operation.

6.5 Methodology Ranks 5 and 6 for Flares

As previously mentioned, flares are difficult to test, so only a few emission factors have been developed for flares. Available emission factors for flares were provided in Tables 6-2 and 6-3 for use with continuous flow and heat content monitoring. Methodology Rank 5 for flares consists of using these same emission factors, but with estimates of the flow rate and heating content of the flare gas rather than direct measurement of these values. The total VOC emission factor could be used with knowledge of the components in the flare gas to estimate HAP emissions.

Methodology Rank 6 for flares includes emission factors for HAP that were developed for the *Petroleum Refinery Source Characterization and Emission Model for Residual Risk Assessment* (RTI, 2002) based on the State of Louisiana's title V permit applications data. The original emission factors presented in RTI's document (2002) were based on arithmetic averages. However, the arithmetic average is occasionally skewed by one high estimate. The log-mean average emission factors from the State of Louisiana's title V permit applications data were calculated and are provided in **Table 6-4**. These emission factors yield a cumulative emission estimate from all flares (not per flare) for the refinery based on the total refinery crude capacity in barrels per calendar day (bbl/cd). It is uncertain how the permit application estimates were developed and whether these estimates include SSM events, but it is likely that these factors would not include emissions released during significant SSM events. As such, these emission factors are very general and are not recommended unless no other information is available. Refineries are expected to have more source-specific information for estimating flare emissions, but these factors may be used for the purposes of modeling or for general emissions estimates.

The application of these emission factors is straightforward, using Equation 6-3.

$$E_i = Cap \times EF_i \qquad \text{(Eq. 6-3)}$$

where:

E_i = Mass emissions per year of pollutant "i" (tons/yr)
Cap = Crude capacity of refinery (bbl/cd)
EF_i = Emission factor for pollutant "i" (tons/yr/bbl/cd)

Table 6-4. Flare General Emission Factors[a]

CAS Number	Component	Emission Factor (tons/yr/bbl/cd)
71-43-2	Benzene	9 E-06
108-88-3	Toluene	7 E-06
1330-20-7	Xylene	6 E-06
1634-04-4	Methyl tertiary-butyl ether	3 E-06
110-54-3	Hexane	1 E-05
50-00-0	Formaldehyde	1 E-06
100-41-4	Ethylbenzene	2 E-07
106-99-0	1,3-Butadiene	7 E-06

[a] Source: Log-mean average from State of Louisiana's title V permit applications data

Example 6-2 shows the calculation of emissions from flares at a refinery with a given crude capacity.

Example 6-2: Emissions Factor

Given that a refinery has a crude capacity of 100,000 bbl/cd crude capacity, the annual emissions of benzene (C_6H_6) emissions can be calculated from flares at the refinery as follows:

$$E_{C_6H_6} = Cap \times EF_{C_6H_6}$$

$$E_{C6H6} = (100{,}000) \times (9E\text{-}06)$$

$$E_{C6H6} = 0.9 \text{ tons/yr}$$

7. Wastewater Collection and Treatment Systems

Industrial wastewater collection and treatment operations range from simple pre-treatment operations that discharge to publicly owned treatment works (POTW) to full-scale wastewater treatment systems. Full-scale treatment systems include the collection of process and/or storm water that is treated to a quality that is acceptable for discharge to a receiving water body or for re-use.

Wastewater collection systems differ among facilities, but they generally include drains, manholes, trenches, lift stations, sumps, junction boxes, and weirs. As water passes through each of these system components, emissions may occur by volatilization of organic compounds at the water/air interface.

The overall objectives of wastewater treatment at refineries are to: (1) equalize flow and pollutant load by buffering flow surges in large tanks, (2) separate free and emulsified oils and solids from the wastewater by oil/water separators and flotation unit operations (e.g., dissolved air flotation [DAF], induced air flotation [IAF], dissolved nitrogen flotation [DNF]), and (3) oxidize organic molecules and remove or transform nutrients through biodegradation. **Figure 7-1** shows a typical full-scale refinery wastewater treatment scheme.

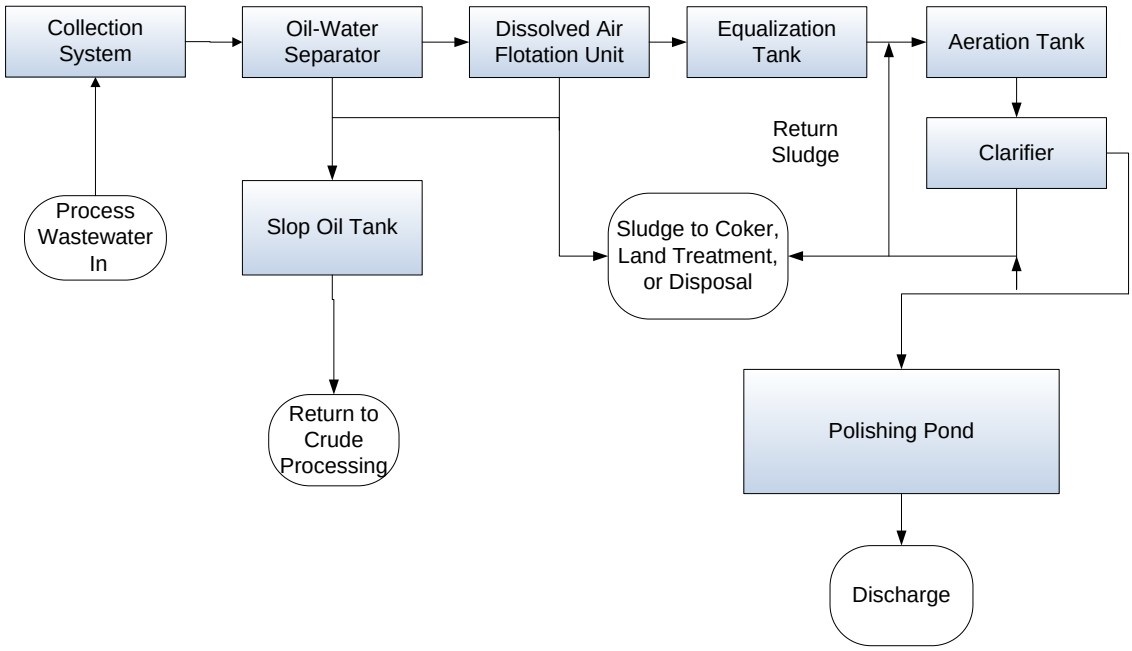

Figure 7-1. Typical refinery wastewater treatment system.

Tanks or treatment units upstream of any benzene removal or destruction systems (e.g., stream strippers, enhanced biodegradation units) at most petroleum refineries are regulated under BWON (Benzene Waste Operations NESHAP) and thus should be covered and vented to appropriate control devices. Equalization tanks, oil/water separators, and flotation units typically fall into this category; however, in the event these units are not covered because they do not contain high benzene quantities, emission estimation methods are presented in this Refinery Emissions Protocol document. Biological treatment units are typically the first uncovered process in the wastewater treatment system and thus the first air emission source.

Table 7-1 lists the emission estimation methods for wastewater treatment systems. The methods are ranked according to anticipated reliability. There are three primary estimation methods: (1) direct measurement, (2) predictive modeling, and (3) engineering estimates. Direct measurements can only be

taken from process units that are covered and vented to a control device. Predictive modeling can be accomplished using analytical equations, such as those presented in AP-42, by using computer-based fate and transport models (e.g., WATER9, TOXCHEM), or by using the simplified refinery wastewater emission tool (RWET) presented in this Refinery Emissions Protocol document. Engineering estimates can be made using emission factors based on crude throughput or wastewater load.

Table 7-1. Summary of Wastewater Treatment Emission Estimates

Rank	Measurement Method	Application	Data Requirements
1	Direct measurement	Covered and vented units	▪ Constituent load and speciation of collected gas samples
2a	Predictive modeling with site-specific factors and biodegradation rates followed by validation	Uncovered units	▪ Constituent load and speciation of process wastewaters ▪ Site-specific biodegradation rates ▪ Model validation by a direct measurement method
2b	Predictive modeling with site-specific factors and biodegradation rates	Uncovered units	▪ Constituent load and speciation of process wastewaters ▪ Site-specific biodegradation rates
2c	Predictive modeling with site-specific factors	Uncovered units	▪ Constituent load and speciation of process wastewaters
3a	Engineering estimates based on wastewater treatment plant load	Uncovered units	▪ Constituent load and speciation of process wastewaters
3b	Engineering estimates based on crude throughput	Uncovered units	▪ Crude throughput

7.1 Methodology Rank 1 for Wastewater Treatment Units

Emissions from covered and vented wastewater treatment units and drainage system components can be directly measured using CEMS or periodic sampling; emission inventory estimates for these vented sources can be developed using the methods summarized in Section 4, *Stationary Combustion Sources*, and Section 5, *Process Vents*, of this Refinery Emissions Protocol document.

Although there are direct measurement methods for uncovered units (i.e., off gas collectors and open path optical methods such as DIAL), these methods do not provide continuous monitoring data. Therefore, these methods are not recommended as primary techniques for emission estimations, but are reasonable for predictive modeling validation.

7.2 Methodology Rank 2 for Wastewater Treatment Units

Air emission estimation modeling techniques use mathematical equations to predict the fate and transport of specific constituents in wastewater. This section describes some key wastewater treatment units and the applicable methods for estimating the emissions from these units. Wastewater collection systems are considered an initial wastewater treatment unit to account for the emissions.

AP-42 presents a variety of emissions equations for estimating air emissions from various waste water treatment systems (U.S. EPA, 1995a). There are various computer-based fate and transport models (e.g., WATER9 and TOXCHEM), that implement these equations for specific wastewater treatment units and that support the development of system-wide wastewater collection and treatment emissions estimates. Although successful use of the available predictive models has been demonstrated, reporting facilities have expressed concerns regarding complexity, user friendliness, and accuracy; therefore, a simplistic refinery wastewater emission tool (RWET) has been developed as part of this document to address these issues and provide more accurate comparisons among refineries. RWET was designed to help the user

identify critical model inputs for each process unit, recognize variables and constants that may be site-specific, and calculate air emissions and constituent effluent concentrations. Additionally, constituent effluent concentrations from a treatment unit can be used as inputs for the next downstream unit when processes are linked in a series (e.g., oil-water separator effluent data equals input data for the DAF unit).

The "Critical Inputs" section of the refinery wastewater emission tool includes data that is required to estimate air emissions from the specific process unit. The "Variables with Default Values" section includes inputs that may be site-specific or unknown to the user. Default values are taken from AP-42, but they can be changed if more accurate data are known or determined. The Chemical Properties sheet contains the best available chemical, physical, and biodegradation information on the 30 organic HAP listed in the Petroleum Refinery MACT I. However, if more accurate or site-specific data are available, then these data can be inserted in the Site-Specific Table on the Chemical Properties sheet, and the model will override the default values. Detailed instructions for use and application are provided in the refinery wastewater emission tool.

Since reliable variables to estimate emissions for all volatile organic compounds (VOC) are not available, air emission estimates for compounds not listed in the MACT I can be made using surrogate compounds. Butane is the surrogate compound used for $C_2 – C_4$ VOC and octane for $C_4 – C_9$ in the refinery wastewater emission tool. Air emission estimates for compounds not listed and considered non-volatile (e.g., > C_9 and Henry's law constant > 10^{-3} atm-m^3/gmol) can be made using the Compound A, B, or C rows in the tool. The following list of chemical, physical, and biological degradation properties for each compound are required to reliably estimate air emissions:

1. Molecular weight
2. Vapor pressure
3. Henry's law constant
4. Diffusivity in water
5. Diffusivity in air
6. Octanol-water partitioning coefficient
7. Maximum biorate constant
8. Half saturation biorate constant

The calculations used in RWET and variable definitions are based on those presented in AP-42 and on peer-reviewed journals and are presented in detail in Appendix B, *Wastewater Treatment System Equations*, of this Refinery Emissions Protocol document. RWET is available for free at the following EPA website: http://www.epa.gov/ttn/chief/efpac/esttools.html.

7.2.1 Wastewater Collection Systems

Wastewater collection systems are complex networks of various components that drain large surface areas. These complexities make accurately estimating air emissions a very challenging task. RWET utilizes process drainage areas (PDAs), shown schematically in **Figure 7-2**, to more-easily estimate air emissions. Rather than summing all of the drains and other components within the processing area, model drainage systems are developed for each PDA. The model drainage components are based on the typical (or reasonable worst-case) components that an individual waste stream will experience. In the top drainage area of **Figure 7-2**, an individual waste stream would experience typically two drains (or, for a worst-case assessment, three drains), one junction box, one manhole cover, and a lift station. For the lower drainage area of **Figure 7-2**, an individual waste stream in this area would experience typically two drains (or, for a worst-case assessment, three drains), a length of open trench (from either the middle or

furthest most drain for the typical or worst-case assessment, respectively), one sump, and a lift station. Each of the model drainage system components may be identified as either controlled or uncontrolled. Components meeting the requirements for controlled drainage components in BWON are considered controlled components. The drainage components do not necessarily have to be subject to BWON to be considered controlled, only that the specified controls are used (e.g., water seals for drains, gasketed manhole covers, or drainage systems vented to a control device).

For each PDA, the wastewater generation rate and pollutant concentration at the point of generation (POG) are needed to determine the pollutant load to the system. Model drainage components, constituent load, and control efficiencies are then utilized within RWET to estimate air emissions for a given PDA. The emissions from each PDA are then combined to obtain the total for the wastewater collection system. More details of this method are presented in Appendix B, *Wastewater Treatment System Equations*. **Table 7-2** lists the critical inputs, variables with default values, and chemical properties specific to wastewater collection system PDAs.

As previously stated, RWET utilizes model drainage system components to ease the complexity of estimating air emissions from collection systems. However, if system components (e.g., lift stations, junction boxes, and sumps) vary greatly from those described in the Best Available Control Technology/ Lowest Achievable Emission Rate (BACT/LAER), site-specific air emissions can be determined from the procedures described in Appendix B, *Wastewater Treatment System Equations*.

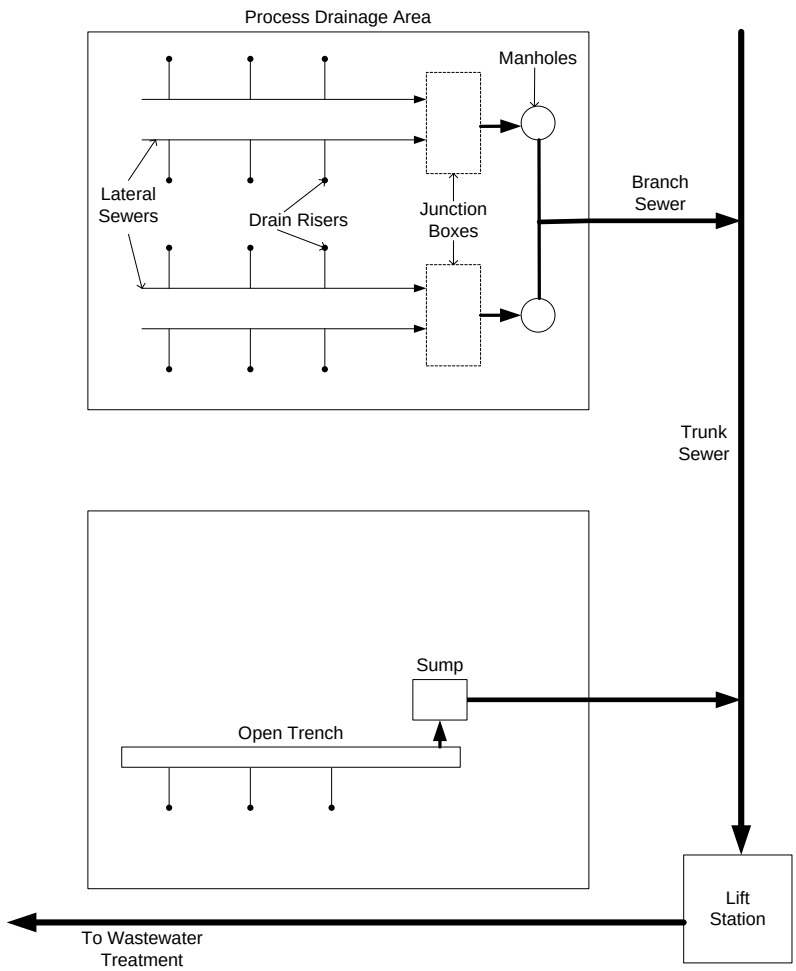

Figure 7-2. Typical refinery wastewater collection system process drainage areas.

Table 7-2. Critical Inputs and Chemical Properties Specific to Wastewater Collection System PDA Air Emission Calculations

Critical Inputs	Variables with Default Values	Chemical Properties
Number of drains	Controlled / Uncontrolled	Henry's Law Constant (H)
Linear meters of open trench	Control Efficiency	
Number of manholes		
Number of junction boxes		
Number of lift stations		
Number of sumps		
Wastewater flow rate (Q)		
Constituent concentration at POG (C_0)		

7.2.2 Primary Weirs

Weirs can serve as open-channel dams and utilized in settling basins to discharge cleaner effluent. As previously stated, these components of the wastewater collection system are typically covered and vented; therefore, open-air emission estimations are not required. However, if the treatment units are uncovered, then the refinery wastewater emission tool can be used to estimate air emissions. **Table 7-3** lists the critical inputs, variables with default values, and chemical properties specific to weirs.

Table 7-3. Critical Inputs, Variables, and Chemical Properties Specific to Primary Weir Air Emission Calculations

Critical Inputs	Variables with Default Values	Chemical Properties
Wastewater flow rate (Q)	Diffusivity of oxygen in water ($D_{O2,w}$)	Diffusivity of constituent in water (D_w)
Constituent influent concentration (C_0)		Henry's Law Constant (H)
Weir height (h)		

7.2.3 Oil-Water Separators

An oil-water separator is a treatment unit designed to separate oil and suspended solids from wastewater. As previously mentioned, these treatment units are typically covered and vented; therefore, open-air emission estimations are not required. However, if the treatment units are uncovered, then the refinery wastewater emission tool can be used to estimate air emissions. **Table 7-4** lists the critical inputs, variables with default values, and chemical properties specific to oil-water separators.

If an oil-water separator is covered except for the effluent weir, air emissions can be calculated by using the methods described in Section 7.2.3 (primary weirs) and the associated sheet in RWET.

Table 7-4. Critical Inputs, Variables, and Chemical Properties Specific to Oil-Water Separators Air Emission Calculations

Critical Inputs	Variables with Default Values	Chemical Properties
Surface area (A)	Flow of oil (Q_{oil})	Diffusivity of constituent in air (D_a)
Oil layer thickness (O_{layer})	Density of oil (ρ_{oil})	Octanol–water partitioning coefficient (Kow)
Total pressure (P_0)	Molecular weight of oil (MW_{oil})	Vapor pressure of constituent (P*)
Wastewater flow rate (Q)	Density of air (ρ_{air})	
Constituent influent concentration (C_0)	Molecular weight of air (MW_{air})	
Wind speed (U_{10})	Viscosity of air (μ_a)	
	Fraction of volume that is oil (FO)	

7.2.4 Dissolved Air Flotation Units

DAF is a wastewater treatment unit that uses bubble flotation to remove suspended oil and solids from water. As previously mentioned, these treatment units are typically covered and vented to control devices. However, if the treatment units are uncovered, then the refinery wastewater emission tool can be used to estimate air emissions. **Table 7-5** lists the critical inputs, variables with default values, and chemical properties specific to DAF units.

Table 7-5. Critical Inputs, Variables, and Chemical Properties Specific to DAF Air Emission Calculations

Critical Inputs	Variables with Default Values	Chemical Properties
Surface area (A)	Viscosity of water (μ_L)	Diffusivity of constituent in air (D_a)
Temperature (T)	Density of water (ρ_L)	Diffusivity of constituent in water (D_w)
Total pressure (P_0)	Molecular weight of water (MW_L)	Henry's law constant (H)
Wastewater flow rate (Q)	Density of air (ρ_{air})	
Constituent influent concentration (C_0)	Molecular weight of air (MW_{air})	
Diffused air flow rate (Q_a)	Viscosity of air (μ_a)	
Wind speed (U_{10})		

7.2.5 Equalization Tanks

Equalization tanks dampen variations in wastewater flow rate and pollutant load to lessen negative impacts on downstream processes. As previously mentioned, these tanks are commonly covered and vented to control devices; however, if the treatment units are uncovered, then the refinery wastewater emission tool can be used to estimate air emissions. **Table 7-6** lists the critical inputs, variables with default values, and chemical properties specific to equalization tanks.

Table 7-6. Critical Inputs, Variables, and Chemical Properties Specific to Equalization Tank Air Emission Calculations

Critical Inputs	Variables with Default Values	Chemical Properties
Surface area (A)	Density of water (ρ_L)	Diffusivity of constituent in air (D_a)
Temperature (T)	Viscosity of water (μ_L)	Diffusivity of constituent in water (D_w)
Total pressure (P_0)	Density of air (ρ_{air})	Henry's law constant
Wastewater flow rate (Q)	Molecular weight of air (MW_{air})	
Constituent influent concentration (C_0)	Viscosity of air (μ_a)	
Wastewater depth (D)	Rotational speed of impeller (w)	
Total power to aerators (P_{tot})	Quiescent surface area (A_Q)	
Number of aerators (N_l)	Oxygen transfer correction factor (O_t)	
Turbulent surface area (A_T)	Oxygen transfer rating to surface area (J)	
Wind speed (U_{10})	Impeller diameter (d)	

7.2.6 Biological Treatment Units

Biological treatment is an effective process to reduce, remove, or transform organic constituents and nutrients typically found in refinery wastewater to an acceptable form or concentration prior to discharge or re-use. However, biological treatment units are complex and vary greatly in design, operation, and

treatment efficiency, resulting in units that are difficult to characterize. Multiple fate and transport mechanisms are often involved in the ultimate removal of a specific compound. As seen in **Figure 7-3**, biodegradation, volatilization, adsorption, hydrolysis, and photo degradation are common mechanisms in wastewater treatment that may compete against each other. Additionally, biological systems are dynamic in nature, resulting in shifts in the dominant fate mechanism. Therefore, it is important to obtain and use site-specific variables when estimating emissions to obtain accurate results.

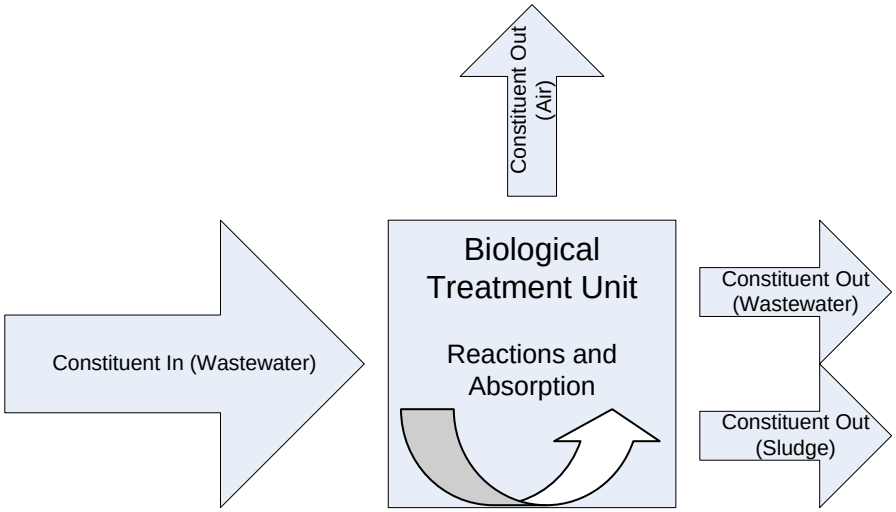

Figure 7-3. Simplified drawing of a constituent mass balance in a biological treatment unit.

The two primary classes of biological treatment units are suspended-growth and attached-growth systems. Suspended-growth systems maintain the biomass (flocs) in suspension by mechanical or aeration devices where biodegradation occurs. Examples of suspended-growth systems include activated sludge, aerated lagoons, sequencing batch reactors, and membrane bioreactors. Attached-growth systems establish biofilms on fixed surfaces where biochemical reactions occur. Examples of attached-growth systems include trickling filters, rotating biological contactors, and fluidized-bed reactors. Regardless of the type of biological treatment used, the biochemical reactions are generally the same, with the oxidation of organic compounds and ammonia forming new cells, CO_2, and water.

To maintain the health of the microorganisms and ensure adequate biologically mediated oxidation of the organic compounds and ammonia, O_2 must be introduced into the system. There are two basic methods for aerating wastewater: (1) introducing air or pure O_2 into the wastewater through diffusers or other devices, and (2) agitating the water to increase surface area and promote the gaseous exchange with the atmosphere. However, the mechanisms that increase dissolved oxygen concentration in the water also increase the emission rate of organic constituents through increased volatilization. The volatilization rate can be affected by the wastewater surface area, turbulence, and temperature; hydraulic retention; water depth; concentration and physical properties of the organic constituents (e.g., volatility, diffusivity, inhibitory mechanisms); and atmospheric conditions.

As previously mentioned, the biological treatment unit will most likely be the first uncovered process in the wastewater treatment system and potentially the greatest source of air emissions. **Table 7-7** lists the critical inputs, variables with default values, and chemical properties specific to biological treatment unit air emission calculations.

Table 7-7. Critical Inputs, Variables, and Chemical Properties Specific to Biological Treatment Unit Air Emission Calculations

Critical Inputs	Variables with Default Values	Chemical Properties
Surface area (A)	Density of water (ρ_L)	Diffusivity of constituent in air (D_a)
Temperature (T)	Viscosity of water (μ_L)	Diffusivity of constituent in water (D_w)
Total pressure (P_0)	Density of air (ρ_{air})	Henry's law constant
Wastewater flow rate (Q)	Molecular weight of air (MW_{air})	Maximum biodegradation rate constant (K_{max})
Constituent influent concentration ($C_{0,X}$)	Viscosity of air (μ_a)	Half saturation biorate constant (K_s)
Wastewater depth (D)	Weight fraction of the total carbon in biomass (f_{OC})	Octanol-water partitioning coefficient (K_{ow})
Total power to aerators (P_{tot})	Quiescent surface area (A_Q)	
Number of aerators (N_I)	Oxygen transfer correction factor (O_t)	
Mixed liquor volatile suspended solids (C_{MLVSS})	Oxygen transfer rating to surface area (J)	
Influent BOD concentration ($C_{0,BOD}$)	Impeller diameter (d)	
Wind speed (U_{10})	Rotational speed of impeller (w)	
Turbulent surface area (A_T)	Biomass volatile suspended solids yield from influent biochemical oxygen demand (Y)	
Wasted sludge flow rate (Q_w)		

7.2.7 Polishing Ponds

Although air emissions downstream of biological treatment should be minimal, ineffective treatment, constituent slugs, or hydraulic surges may lead to HAP contamination of tertiary treatment processes (i.e., polishing ponds). If air emission estimates are needed for polishing ponds, then the equalization tank sheet of the refinery wastewater emission tool can be used. Although polishing ponds may function as a plug-flow reactor, the assumption can be made that volatilization is the major constituent fate mechanism. If the polishing pond is aerated and has significant active biomass (> 40 milligrams per liter [mg/L] volatile suspended solids), the biological treatment sheet of the model may be used.

7.2.8 Site-Specific Factors

There has been tremendous effort to compile default values for specific variables to estimate air emissions; however, site-specific data provide the most accurate results. The factors that can have the most dramatic impact on air emissions from a biological treatment unit are the ones impacting biodegradation. Compound-specific biodegradation rate constants (i.e., k_0 and k_1) and the half-saturation concentration (i.e., K_S) can be determined by using the aerated reactor test (BOX test). The empirically derived values can then be used in a predictive model for more accurate results than can be developed when default biodegradation rate constant values are use. The methods used to determine the fraction of organic constituent biodegraded are provided in 40 CFR Part 63, Appendix C (also available at: http://www.epa.gov/EPA-AIR/2004/June/Day-30/a14826.htm).

Although these methods have been successfully used to estimate biodegradation rates, there are concerns. Specifically, it is argued that dosing the bioreactor with only one constituent of interest yields inaccurate biodegradation rates compared to those dosed with a mixture of compounds commonly encountered by the microorganisms. Preferential biodegradation, degradation by-products, and co-metabolism are

important factors to consider when determining biodegradation rates that are not addressed in the recommended methods. Yerushalmi and Guiot (1998) reported biodegradation rates of benzene and toluene that were 62.9 and 16.4 times greater, respectively, when used as the sole substrate, versus a mixture of organic compounds. It is recommended that the constituent of interest be dosed in the appropriate ratio with organic compounds found in the real-world system (as described in Appendix C). Additionally, the methods do not distinguish between biodegradation, hydrolysis, and adsorption. Rather, the results of the BOX test are a summation of the three primary fate mechanisms common to aerated bioreactors. This fact is important to consider when assessing all the fate mechanisms involved in compound degradation.

7.2.9 Model Validation

To ensure that predictive model outputs are accurate, validation studies can be conducted to support the results. This task is accomplished by secondary direct or in-direct measurement techniques such as offgas collectors, DIAL, concentration-profile methods. Direct measurements are taken of a modeled process unit, and the results are compared. Favorable comparisons are indicative of accurate predictive modeling, whereas poor comparisons could be the result of incorrect assumptions or errors in the model. If corrective actions are necessary, a review of the constants and site-specific variables should be conducted.

7.3 Methodology Rank 3 for Uncovered Units

7.3.1 Engineering Estimates Based on Wastewater Treatment Plant Load

If a facility only has benzene wastewater concentration data, then this method can be used to estimate the unknown HAP concentrations for use in the predictive modeling methods in Section 7.2, *Methodology Rank 2 for Uncovered Units*. The wastewater generation rates, benzene concentrations, and total HAP concentrations presented in **Table 7-8** (U.S. EPA, 1998a) were combined with the total U.S. refinery processing and production capacities reported by EIA (2009) to calculate an average wastewater mixture to determine an average benzene and total HAP concentration of refinery wastewater. These data were evaluated using the average petroleum stream composition provided in Appendix B, *Wastewater Treatment System Equations*, of this Refinery Emissions Protocol document and an evaluation of the log octanol water partition coefficient to help speciate the total HAP concentration before and after oil removal. The results of this analysis (see **Table 7-9**) are relative concentrations of key pollutants as a ratio of the benzene concentration. If the benzene concentration of the refinery wastewater is known, then the concentration of other organics in the wastewater can be estimated using the ratios in **Table 7-9**.

7.3.2 Engineering Estimates Based on Process Capacities

Facilities that do not have any of the required data to estimate air emissions (e.g., for proposed units) can use the factors in **Table 7-8** to estimate wastewater generation rates and benzene concentrations to the wastewater treatment system. Either the factors in **Table 7-8** can be used to estimate the total organic HAP concentration, or the factors in **Table 7-9** can be used to estimate the specific HAP (and total HAP) concentrations of the wastewater. The generated data can then be used to estimate specific constituent wastewater loads (see Section 7.3.1, *Engineering Estimates Based on Wastewater Treatment Plant Load*) and used in the predictive modeling methods in Section 7.2, *Methodology Rank 2 for Uncovered Units*. If the wastewater treatment system design is unknown, then the default emission factors in **Table 7-10** can be used to estimate the fraction of the total constituent load to the wastewater treatment system (calculated using the factors in **Tables 7-8** and **7-9**) that is expected to be released into the atmosphere.

Table 7-8. Model Process Unit Characteristics for Petroleum Refinery Wastewater[a]

Process Unit	Average Flow Factor[b] (gal/bbl)	Average Benzene Concentration[c] (ppmw)	Average Organic HAP Concentration (ppmw)
Crude distillation	2.9	21	140
Alkylation unit	6	3	6.9
Catalytic reforming	1.5	106	238
Hydrocracking unit	2.6	14	72
Hydrotreating/hydrorefining	2.6	6.3	32
Catalytic cracking	2.4	13	165
Thermal cracking/coking	5.9	40	75
Thermal cracking/visbreaking	7.1	40	75
Hydrogen plant	80[d]	62	278
Asphalt plant	8.6	40	75
Product blending	2.9	24	1,810
Sulfur plant	9.7[e]	0.8	3.4
Vacuum distillation	3	12	53
Full range distillation	4.5	12	65
Isomerization	1.5	33	117
Polymerization	3.5	0.01	0.04
MEK dewaxing units	0.011	0.1	27
Lube oil/specialty processing unit	2.5	40	75
Tank drawdown	0.02	188	840

Note: gal/bbl = gallons of wastewater per barrel of capacity at a given process unit, ppmw = parts per million by weight

[a] Source: U.S. EPA, 1998.

[b] All flow factors were derived from Clean Air Act Section 114 questionnaire responses

[c] Average concentration in the wastewater

[d] This flow factor is given in gallons per million cubic feet (gal/MM ft^3) of gas production

[e] This flow factor is given in gal/ton of sulfur

Table 7-9. Refinery Wastewater Contaminant Concentrations as a Ratio to Benzene

CAS No.	HAP	Mass Concentration Ratio of Compounds to the Concentration of Benzene	
		Inlet to Oil-Water Separator or DAF Unit	Inlet to Biological Treatment Unit (After Oil-Water Separator)
540841	2,2,4-Trimethylpentane	1.97	0.022
71432	Benzene	1.00	1.00
92524	Biphenyl	0.034	0.0005
1319773	Cresols	0.25	0.38
98828	Cumene	0.37	0.013
100414	Ethylbenzene	0.88	0.086
110543	Hexane	3.50	0.047

(continued)

Table 7-9. Refinery Wastewater Contaminant Concentrations as a Ratio to Benzene (continued)

CAS No.	HAP	Mass Concentration Ratio of Compounds to the Concentration of Benzene	
		Inlet to Oil-Water Separator or DAF Unit	Inlet to Biological Treatment Unit (After Oil-Water Separator)
1634044	Methyl tertiary-butyl ether	0.58	0.98
91203	Naphthalene	0.29	0.02
108952	Phenol	0.18	0.80
100425	Styrene	0.58	0.09
108883	Toluene	3.3	0.80
1330207	Xylene	3.6	0.33
106990	1,3-Butadiene	0.0006	0.0027
VOC	Total VOCs	81	17

Table 7-10. Default Mass Emission Factors for Refinery Wastewater Collection and Treatment Systems

CAS No.	HAP	Mass Fraction of Compound Emitted from Wastewater Collection and Treatment System Based on Total Wastewater Loading	
		Open Wastewater Collection and Treatment System	BWON-Compliant Wastewater Collection and Treatment System
106990	1,3-Butadiene	0.91	0.75
540841	2,2,4-Trimethylpentane	0.95	0.55
71432	Benzene	0.65	0.25
92524	Biphenyl	0.34	0.031
1319773	Cresols	0.002	0.000
98828	Cumene	0.68	0.24
100414	Ethylbenzene	0.66	0.22
110543	Hexane	0.97	0.55
1634044	Methyl tertiary-butyl ether	0.45	0.091
91203	Naphthalene	0.41	0.098
108952	Phenol	0.000	0.000
100425	Styrene	0.81	0.64
108883	Toluene	0.66	0.19
1330207	Xylene	0.64	0.21
VOC	Total VOCs (using butane)	0.94	0.60

Example 7-1. Methodology Rank 3 for Wastewater

A refinery has the following processing and production rates. The average annual emissions of hexane, benzene, toluene, and xylene can be estimated from the wastewater collection and treatment system for a BWON-compliant refinery.

Process Unit or Operation	Average Throughput (bbl/cd)
Atmospheric distillation	100,000
Vacuum distillation	50,000
Catalytic reforming	20,000
Catalytic cracking	40,000
Alkylation	10,000
Product blending	60,000
Total crude and product tank throughput	180,000

Use the factors in **Table 7-8** and the density of water (ρ_{water} = 8.34 lb/gal) to estimate the total wastewater flow rate and benzene loading rate.

Process Unit or Operation	(A) Average Throughput (bbl/cd)	(B) Wastewater Flow Factor (gal/bbl)	(C) = A×B Wastewater Flow (gal/cd)	(D) Benzene Concentration (ppmw)	(E) = C×ρ×D/10^6 Benzene Mass Flow (lb/cd)
Atmospheric distillation	100,000	2.9	290,000	21	50.8
Vacuum distillation	50,000	3	150,000	12	15.0
Catalytic reforming	20,000	1.5	30,000	106	26.5
Catalytic cracking	40,000	2.4	96,000	13	10.4
Alkylation	10,000	6	60,000	3	1.5
Product blending	60,000	2.9	174,000	24	34.8
Tank drawdown	180,000	0.02	3,600	188	5.6
Totals			**803,600**		**144.7**

Use the factors in **Table 7-9** to estimate the mass loading rate of other compounds and the BWON-compliant emission factors in **Table 7-10** to estimate the annual emissions.

Compound	(A) Mass Ratio from Table 7-9	(B) = A×144.7 Mass Flow (lb/cd)	(C) Emission Factor from Table 7-10	(D) = B×C×365/2000 Annual Emissions (tons/yr)
Hexane	3.5	506.5	0.55	51
Benzene	1.0	144.7	0.25	6.6
Toluene	3.34	483.3	0.19	17
Xylene	3.57	516.6	0.21	20

8. Cooling Towers

Cooling water is used in refineries in heat exchange systems and condensers to cool or condense various product streams. The cooling water for a closed-loop recirculation system may be sent to a cooling tower, where it is cooled to near ambient temperature for reuse, and then is returned to the process or to refrigeration units for additional cooling. The cooling water for a once-through system may be cooled and sent to a receiving waterbody. This section focuses on cooling towers because these are used predominately in the petroleum refining industry. Some refineries use once-through cooling systems (emission estimates for once-through cooling systems can be estimated using essentially the same techniques used for cooling towers).

Organic HAP and VOC are picked up by cooling water when leaks occur in heat exchangers or condensers. Product on the high-pressure side leaks through cracks in the exchanger and contaminates the water. Organic HAP, VOC, PM_{10}, and chlorine are subsequently emitted from the water into the atmosphere due to stripping (i.e., active air and water contact) in the cooling tower and drift loss. Large emissions on the order of tons per year can occur for low levels of contamination or concentration because refineries use large volumes of cooling water. Generally, CH_4 or other GHGs are not significant pollutants for cooling towers; however, if the cooling water is used on a high CH_4 process stream, then CH_4 emissions can be calculated using the same methods presented in this section for calculating volatile hydrocarbon emissions from cooling towers. The cooling tower emission estimates require information on the cooling water flow rate and the composition of the process stream in the heat exchanger or in the condenser or refrigeration units. These emission estimates are also dependent on the type of heat exchange monitoring system used.

Table 8-1 summarizes the hierarchy of cooling tower emission estimation techniques. The methods are ranked in terms of anticipated reliability. Within a given measurement method (or rank), there may be alternative methods for determining the constituent-specific emissions; these compositional analysis methods are also provided in order of reliability. Multiple methods are provided for volatile organic HAP and VOC, while one method is provided for PM_{10}, chlorine, and heavy organic HAP. Cooling towers may service more than one process and have multiple cooling water return lines. The monitoring performed on different cooling water return lines may differ for return lines leading to a single cooling tower. The methods described in this section can be applied to individual return lines (if the flow rate of each line is known) so that the total emissions from a cooling tower may be calculated as the sum of the emissions estimated for each return line. Different return lines to a single cooling tower may use different rank methodologies based on difference in the monitoring conducted on the individual return lines.

The remainder of this section provides additional detail and guidance regarding the implementation of these methods. In general, annual emissions from cooling towers should account for the full operating time of the cooling tower on an annual basis. Annual cooling tower emissions can be estimated using the measured concentrations for each monitoring period (whether the measured concentration constitutes a leak or not) and summing emissions over all monitoring periods or can be estimated using emission factors for the full annual operating time of the cooling tower. Hourly emissions should be estimated based on the highest hourly emission rate for the cooling tower; when default emission factors are used, the hourly emissions should be determined based on the highest recirculation rate experienced for that year.

Table 8-1. Summary of Cooling Tower Emissions Estimation Methodologies

Rank	Measurement Method or Emission Factor	Compositional Analysis Data
1	▪ Air stripping simulation using Appendix P, Modified El Paso method (speciated VOC) [a] ▪ Water recirculation rate	▪ Speciation of collected gas samples with EPA TO-14 or TO-15 methods, with EPA Method 18, or with a portable (not handheld) gas chromatograph/flame ionization detector
2	▪ Air stripping simulation using Appendix P, Modified El Paso method[a], using a flame ionization detection analyzer (total VOC) ▪ Water recirculation rate	▪ Process-specific, service-specific concentrations ▪ Process-specific average concentrations ▪ Site-specific refinery average stream concentrations ▪ Default process compositions
3	▪ Direct water measurement by EPA Method 8260B[b] before and after exposure to the atmosphere (e.g., at the cooling tower return line and at the outlet of cooling tower) ▪ Water recirculation rate	▪ Speciation of collected water samples
4	▪ Direct water measurement by EPA Method 8260B[b] before exposure to the atmosphere (e.g., at the heat exchanger exit line, or at the cooling tower return line) ▪ Water recirculation rate	▪ Speciation of collected water samples
5	▪ AP-42 emission factor for VOC, PM_{10}, and chlorine ▪ Water recirculation rate OR ▪ Material balance	▪ Process-specific, service-specific concentrations ▪ Process-specific average concentrations ▪ Site-specific refinery average stream concentrations ▪ Default process compositions

[a] Source: TCEQ, 2003.
[b] Source: U.S. EPA, 1996.

8.1 Methodology Ranks 1 and 2 for Cooling Towers

The El Paso method (TCEQ, 2003) uses a flow-through system for air stripping a sample of water and analyzing the stripped gases for VOC using a flame ionization detection (FID) analyzer. This method measures the quantity of easily strippable components from the cooling water that have boiling points below 140°F. In this method, a continuous stream of cooling water is transferred via a pipe or flexible tubing to an air-stripping column apparatus. Air flowing countercurrent to the cooling water in the apparatus strips VOC and organic HAP from the water. Concentrations of pollutants in the air exiting the stripping column are measured, along with the air and water flow rates to the apparatus, to allow estimation of the concentrations of strippable VOC in the cooling water. At the apparatus air outlet, the concentrations may be measured using an on-site FID analyzer to determine the total strippable VOC (Methodology Rank 2 for cooling towers) or an on-site portable gas chromatograph (GC); (Methodology Rank 1 for cooling towers), or the concentrations may be measured by collecting samples in sample canisters for off-site laboratory analysis for speciation of air contaminants (Compendium Method TO-14A, Compendium Method TO-15, or Method 18 [which are all Rank 1 methods]).

The data necessary to implement Methodology Ranks 1 and 2 for cooling towers include speciated air-stripped compounds concentration, operating parameters of the air-stripping apparatus, and the cooling water flow rate. **Table 8-2** summarizes the data requirements for Methodology Ranks 1 and 2.

Table 8-2. Data Requirements for VOC or Speciated VOC Emissions, Methodology Ranks 1 and 2

Rank	Data That Must Be Collected	The Way in Which Data Are Obtained
Rank 1—speciated VOC emissions	▪ Speciated air-strippable VOC concentration measured in the stripped air (ppmv)	▪ Periodic Appendix P testing results using an air-stripping column apparatus, followed by TO-14A, TO-15, EPA Method 18, or GC/FID
	▪ Sample water flow rate of the apparatus, stripping air flow rate of the apparatus, pressure in the air-stripping column apparatus chamber, and the temperature of stripping chamber	▪ Measurements during Appendix P testing
	▪ Cooling water flow recirculation rates (gal/min)	▪ Continuous measurements from pump flow rate curves, rotameters, or similar methods
	▪ Length of time of the monitoring period (hours)	▪ Assume the measured concentration has occurred for half of the time period since the last sampling date; if a leak occurs, then add the time period it takes to repair the leak
Rank 2—VOC emissions	▪ Air strippable VOC concentration measured in the stripped air (ppmv)	▪ Periodic Appendix P testing results using an air stripping column apparatus, followed by FID
	▪ Sample water flow rate of the apparatus, stripping air flow rate of the apparatus, pressure in the air-stripping column apparatus chamber, and temperature of stripping chamber	▪ Measurements during Appendix P testing
	▪ Cooling water flow recirculation rates (gal/min)	▪ Continuous measurements from pump flow rate curves, rotameters, or similar methods
	▪ Length of time of the monitoring period (hours)	▪ From dates of monitoring events

For cooling towers servicing process streams with multiple components, it is best to determine speciated compounds for air-strippable compounds from the cooling water. For cooling towers servicing process streams with single components, using the FID analyzer is likely adequate. Equation 8-1 should be used to calculate the concentration of the air-strippable components in the cooling water from the concentration detected in the stripped air outlet:

$$C_{Water,i} = \frac{C_{Air,i} * MW * P * PC * b_{stripairflow}}{R * (T + 273) * a_{samplewaterflow} * \rho_{Water}} \qquad \text{(Eq. 8-1)}$$

where:

$C_{Water,i}$ = Concentration of air strippable compound "i" in the water matrix (parts per million by weight [ppmw])
$C_{Air,i}$ = Concentration of compound "i" in the stripped air (parts per million by volume [ppmv])
MW = Molecular weight of the compound (grams per mole [g/mol])
P = Pressure in the air-stripping column apparatus chamber (inches [in.] of Hg)
PC = Pressure conversion factor (0.03342 atmospheres per inch [atm/in.] of Hg)
$b_{stripairflow}$ = Stripping air flow rate of apparatus (milliliters per minute [mL/min])
R = Universal gas constant (82.054 milliliters-atmospheres per mole-Kelvin [mL-atm/mol-K])
T = Stripping chamber temperature (°C)

$a_{samplewaterflow}$ = Sample water flow rate of apparatus (mL/min)
ρ_{Water}= Density of the sample cooling water (g/mL).

When using the El Paso method (TCEQ, 2003), the calculated concentration of the compounds in the water matrix represents the concentration that was stripped and does not represent the total concentration of the compounds in the water matrix prior to stripping. As such, this calculated water concentration is referred to as the "strippable pollutant concentration" in the cooling water. In general, when estimating the total VOC based on the FID analyzer, use the molecular weight (MW) of the calibration gas. Typically, CH_4 is used for the calibration, so the MW for CH_4 (16 g/mol) would be used to estimate the total VOC concentration in the water and the emission rate (reported "as CH_4"). Even when a different calibration gas is used, one may need to use the MW for CH_4 in the event a leak threshold is defined in units of ppmw or ppmv as CH_4.

In general, when the process stream is a single component, then the concentration on a CH_4 basis from the FID can be converted to specific compounds that are expected to be leaking by accounting for C. For a multi-component process stream, it is better to determine speciated compounds using a portable GC/FID, TO-14A, TO-15, or Method 18. For portable GC results, in addition to calibration with a standard compound (CH_4 or propane), the response factor of the unit should be determined for typical compounds expected in the air-stripped stream. For speciated compound results from an off-site laboratory, the concentration in the water for specific compounds can be estimated using the MW for the respective compound (e.g., benzene MW is 78 g/mol). These speciated concentrations (calculated using the compound-specific MW) should be used when estimating emissions for the purposes of an emissions inventory. However, it is important to note that for specific regulatory purposes, these concentrations must be converted to a CH_4 basis (using the MW of CH_4) for comparison to a leak definition threshold that is on an "as CH_4" basis, as shown below in Example 8-1.

Example 8-1: How to Compare Speciated Concentration Results with Leak Definitions That Are Defined as Methane

A facility conducts El Paso monitoring that provides speciated results, but, for regulatory purposes, these concentrations must be converted to a CH_4 basis for comparison to a leak definition for the stripping air that is on a CH_4 basis.

Given: Speciated El Paso monitoring found hexane concentration in the stripped air of 5 ppmv. What is the concentration "as methane?"

In this example, hexane concentration in the stripped air is 5 ppmv. The following equation should be used to convert this concentration to CH_4 basis:

$$5\text{ ppmv Hexane} = \left(\frac{5\text{ mole } C_6H_{14}}{10^6\text{ mole air}} * \frac{6\text{ mole C}}{1\text{ mole } C_6H_{14}} * \frac{1\text{ mole } CH_4}{1\text{ mole C}} \right) = 30\text{ ppmv as } CH_4$$

If the leak definition is 6.2 ppmv as CH_4, then a leak has been detected because the hexane concentration is equivalent to 30 ppmv as CH_4.

Equation 8-2 should be used to estimate emissions for air strippable total VOC from the cooling water:

$$E_i = \frac{C_{Water,i}}{10^6\ \text{ppm}} \times Flow_{CoolingWater} \times 60\frac{\text{min}}{\text{hr}} \times 8.34\frac{\text{lb}}{\text{gal}} \times H_{Year} \times \frac{1\,\text{ton}}{2000\,\text{lb}} \qquad \text{(Eq. 8-2)}$$

where:

E_i	=	Emissions of air strippable pollutant "i" from the cooling water (tons)
$Flow_{CoolingWater}$	=	Flow rate of cooling water (gallons per minute [gal/min])
60	=	Unit conversion for minutes per year (min/yr)
8.34	=	Density of water in pounds per gallon (lb/gal)
1/2000	=	Unit conversion for tons per pound (tons/lb)
H_{Year}	=	Length of time of the monitoring period or the length of time a leak occurs (hr)

When $C_{air,i}$ is based on total VOC results from an FID analyzer (Methodology Rank 2 for cooling towers), pollutant "i" is simply VOC.

When $C_{air,i}$ is based on GC analysis results for individual species (Methodology Rank 1 for cooling towers) or based on site-specific or default species composition data (Methodology Rank 2 for cooling towers), pollutant "i" will be the individual pollutant.

If monitoring or sampling events occur regularly or periodically (i.e., quarterly or monthly), then concentration measurements for consecutive monitoring events can be used to estimate the average emission rate during the intervening period by assigning each concentration measurement to half of the time period between monitoring/sampling events. If significant concentrations of organics are detected in the cooling water (i.e., a "leak" is detected), then the measured concentration is also attributed to the time span from when the leak was discovered until the time when it was repaired. This method is analogous to the "midpoint" method used to annualize equipment leak emissions when periodic monitoring is used. As with equipment leaks, the "modified trapezoid" or "average period" methods could also be used to annualize emissions from cooling towers when periodic monitoring of the cooling water is performed (see Section 2.2.2, *Calculating Annual Average Equipment Leak Emissions*, in this Refinery Emissions Protocol for additional details).

When monitoring or sampling is not conducted regularly or periodically, any measured concentration should be used to calculate the average emission rate from the cooling tower, assuming the concentration is constant for the entire year. In this situation, if the concentration measurement suggests a leak that is subsequently repaired, then use the initially determined "leak" concentration for the entire reporting year up to the time when the leak was repaired.

Example 8-2: Calculation for Methodology Rank 1 for Cooling Towers

Given: A cooling tower with a water recirculation rate of 32,000 gal/min is monitored quarterly using speciated El Paso monitoring. A hexane concentration in the stripped air of 5.0 ppmv is detected during the second quarterly monitoring event, indicating a "leak." The properties of the El Paso stripping column during this monitoring event were as follows: pressure =29.9 in. of Hg; strippable air flow in the apparatus = 2,500 mL/min; temperature = 32°C; sample water flow rate in the apparatus = 125 mL/min. The leak repair took 45 days from the monitoring event to complete. Assuming all other monitoring events found no detectible concentrations of hexane, what are the annual emissions of hexane?

Solution: First use Equation 8-1 to calculate the concentration of air strippable compound in the water as follows.

$$C_{WaterSpecies} = \frac{5.0\,ppmv * 86.17\frac{g}{mole} * 29.9in.Hg * 0.03342\frac{atm}{in.Hg} * 2500\frac{ml}{\min}}{82.054\frac{ml-atm}{mole-K} * (32+273) * 125\frac{ml}{\min} * 1\frac{g}{ml}} = 0.34\,ppmwHexane$$

Thus, the 5 ppmv hexane concentration in the air stream translates to 0.34 ppmw "strippable" hexane in the cooling water.

Next, the emissions must be estimated for the period between the first and second quarterly monitoring events. The exact timing of the monitoring events should be recorded and used, but from the information given (quarterly monitoring), we assume the monitoring events occur 91 days (2,184 hours) apart. One can use either the midpoint, modified trapezoid, or average period emission rate. Using the modified trapezoid or average period method and noting the effective water concentration of the first monitoring event is 0 ppmv hexane, the emissions between the first and second monitoring event is:

$$E_{i,1} = \frac{(0.34-0)/2}{10^6} * 32{,}000\frac{\text{gal}}{\text{min}} * 60\frac{\text{min}}{\text{hr}} * 8.34\frac{\text{lb}}{\text{gal}} * 2{,}184\text{ hr} * \frac{1\text{ton}}{2000\text{lb}} = 2.97\text{ ton Hexane}$$

Similarly, the emissions for the period from the second quarterly monitoring event and the leak repair is estimated. This period is given as 45 days (or 1,080 hours).

$$E_{i,2} = \frac{0.34}{10^6} * 32{,}000\frac{\text{gal}}{\text{min}} * 60\frac{\text{min}}{\text{hr}} * 8.34\frac{\text{lb}}{\text{gal}} * 1{,}080\text{ hr} * \frac{1\text{ton}}{2000\text{lb}} = 2.94\text{ ton Hexane}$$

As these are the only measurable emissions for the year, the annual emissions would be calculated as $E_i = E_{i,1} + E_{i,2}$ = 2.97+2.94 = 5.91 tons, which is 5.9 tons when rounded to two significant figures.

Note: The advantage of the midpoint method is that it uses the same leak concentration for the period between the leak being detected and repaired as the "half" period prior to the monitoring event. Consequently, the time period from the monitoring event and leak repair can be added to the "half" period prior to the monitoring event (91 days÷2 = 1,092 hrs) to calculate a total duration of the leak and calculate the cumulative emissions in one step as follows:

$$E_i = \frac{0.34}{10^6} * 32{,}000\frac{\text{gal}}{\text{min}} * 60\frac{\text{min}}{\text{hr}} * 8.34\frac{\text{lb}}{\text{gal}} * (1{,}092 + 1{,}080)\text{ hr} * \frac{1\text{ton}}{2000\text{lb}} = 5.9\text{ ton Hexane}$$

Example 8-3: Calculation for VOC Emissions Using Methodology Rank 2 for Cooling Towers

Given: The cooling tower with a water recirculation rate of 25,000 gal/min is monitored quarterly using El Paso stripping column (same stripping column properties as in **Example 8-2**) and a VOC concentration in the stripped air of 14 ppmv (as CH_4) is measured on February 1, 2009. The leak was repaired on March 4, 2009 (31 days later). All previous and subsequent monitoring events found VOC concentration in the stripped air of 1 ppmv. What is the annual emissions of VOC from this cooling tower in 2009? If the process fluid contains 10 wt% benzene and a total light (strippable) organic content of 80%, what is the annual emissions of benzene from this cooling tower in 2009?

Solution: Equation 8-1 is used to calculate the concentration of air strippable VOC in the water as CH_4. The water concentration corresponding to the stripping air concentration of 14 ppmv is:

$$C_{Water,VOC} = \frac{14\ ppmv * 16.04 \frac{g}{mole} * 29.9\ in.Hg * 0.03342 \frac{atm}{in.Hg} * 2500 \frac{ml}{\min}}{82.054 \frac{ml - atm}{mole - K} * (32 + 273) * 125 \frac{ml}{\min} * 1 \frac{g}{ml}} = 0.179 \text{ ppmw VOC as } CH_4$$

In the same manner, the water concentration corresponding to the stripping air concentration of 1 ppmv is: 0.0128 ppmw as CH_4 (0.179/14).

Because the leak was identified during the first quarterly monitoring event, the method used to estimate emissions between monitoring intervals (i.e., the midpoint, modified trapezoid, or average period method) will yield slightly different results for 2009, although the total emissions across both 2008 and 2009 will be identical. The modified trapezoid method is the most complicated, requiring interpolation to determine the effective leak rate on January 1, 2009, before the emissions between Januaruy 1 and February 1 can be calculated. We generally recommend the midpoint method due to its ease of use, but the same method should be used for all cooling towers and all inventory years.

Using the midpoint method, the water concentration of 0.179 ppmw as CH_4 is present for 62 days (or 1,488 hour) in 2009 (from Jan. 1 to March 4, 2009). The emissions during this period are:

$$E_{VOC,1} = \frac{0.179}{10^6} * 25{,}000 \frac{gal}{\min} * 60 \frac{\min}{hr} * 8.34 \frac{lb}{gal} * 1{,}488 hr * \frac{1 ton}{2000 lb} = 1.67 \text{ ton VOC}$$

For the remainder of the year (8760 – 1488 = 7,272 hrs), the emissions are:

$$E_{VOC,2} = \frac{0.0128}{10^6} * 25{,}000 \frac{gal}{\min} * 60 \frac{\min}{hr} * 8.34 \frac{lb}{gal} * 7{,}272 hr * \frac{1 ton}{2000 lb} = 0.58 \text{ ton VOC}$$

Therefore, the 2009 VOC emissions from this cooling tower are 1.67 + 0.58 = 2.25 tons VOC.

Example 8-4: Calculation for Speciated HAP Emissions using Methodology Rank 2 for Cooling Towers

Given: The cooling tower in **Example 8-3** serves a process unit whose process fluid contains 10 wt% benzene and a total light (strippable) organic content of 80%. What is the annual emissions of benzene from this cooling tower in 2009?

Solution: In **Example 8-3**, theVOC emissions were calculated to be 2.25 tons in 2009. To determine the mass emissions of benzene, the mass of benzene per mass of VOC stripped in the El Paso column must be calculated. In this example, 80 percent of the process fluid is expected to be strippable organics. The remaining 20 percent may be either inorganic compounds, like H_2 or N_2 that are stripped but are not detected by the organic analyzer, or heavier organics that do not strip appreciably in the stripping column. While more detailed calculations could be performed for compounds that may marginally strip, for the purposes of speciating volatile emissions, it is assumed these non-volatile compounds are not stripped. Benzene represents 10% of the total mass of fluid leaking into the cooling water. Since the total strippable organic content of fluid leaking into the cooling water is 80 percent, the mass fraction of benzene per mass of strippable VOC is 0.1/0.8 or 0.125.

Therefore, benzene is expected to contribute 12.5 percent of the total strippable VOC concentration or 0.28 tons benzene (0.125 tons benzene per ton VOC × 2.25 tons VOC).

8.2 Methodology Rank 3 for Cooling Towers

Methodology Rank 3 is used to estimate emissions from cooling towers and involves using a mass balance approach based on sampling the cooling water before and after the cooling tower. Although Methodology Rank 3 has the potential to be as appropriately reliable as Methodology Ranks 1 or 2 for large leakers, Rank 3 suffers from detection limit issues with water sampling techniques. Consequently, this monitoring approach will not detect the smaller leaks that could significantly contribute to VOC or HAP emissions.

Cooling water typically has low concentrations of components and large volumes of flow rate, so direct water sampling typically requires analysis for low-level concentrations. A common method used for cooling water sampling is Method 8260B. In this method, the sample is introduced into a gas chromatography/mass spectrometry (GC/MS) system, the GC column is temperature programmed to separate the components, and the components are detected with MS. The results from the method are the concentrations of components in the cooling water. Typically, two cooling water samples are taken to estimate the emissions: one sample before and one sample after the cooling water has been exposed to the atmosphere. The change in the component concentration of the cooling water multiplied by the cooling water recirculation rate provides the quantity emitted into the atmosphere for the duration of the leak.

The data necessary to implement Methodology Rank 3 for cooling towers include speciated compounds concentration in the cooling water and the cooling water flow rate. **Table 8-3** summarizes the data requirements of Methodology Rank 3.

Table 8-3. Data Requirements for Speciated Compound Emissions, Methodology Rank 3

Rank	Data That Must Be Collected	The Way in Which Data Are Obtained
Rank 3—speciated emissions	▪ Speciated compounds concentration measured in the inlet cooling tower return line (ppmw)	▪ Periodic sampling results using Method 8260B, including a measurement prior to exposure to the atmosphere
	▪ Speciated compounds concentration measured in the outlet cooling water (ppmw)	▪ Periodic sampling results using Method 8260B, including a measurement after exposure to the atmosphere
	▪ Cooling water flow recirculation rates (gal/min)	▪ Continuous measurements from pump flow rate curves, rotameters, or similar methods
	▪ Length of time of the monitoring period (hours)	▪ Assume the measured concentration has occurred for half of the time period since the last sampling date; if a leak occurs, then add the time period it takes to repair the leak

The change in the component concentration in the cooling water before and after being exposed to the atmosphere is used, along with the cooling water recirculation rate, to estimate the emissions from the cooling water. The following equation (Equation 8-3) can be used to calculate the emissions of components from the cooling water. It is important to note that it is assumed that the water make-up rates offset any drift loss and blowdown loss; therefore, flow "in" to a cooling tower is the same as flow "out" and can be determined based on the water recirculation flow rate, regardless of where this measurement takes place.

$$E_i = \frac{\left(C_{i,In} - C_{i,Out}\right)}{10^6} \times Flow_{CoolingWater} \times 8.34 \frac{\text{lb}}{\text{gal}} \times 60 \frac{\text{min}}{\text{hr}} \times H_{Year} \times \frac{1\,\text{ton}}{2000\,\text{lb}} \qquad \text{(Eq. 8-3)}$$

where:

$C_{i,In}$ = Concentration of component "i" in the cooling water prior to exposure to the atmosphere (ppmw)

$C_{i,Out}$ = Concentration of component "i" in the cooling water after exposure to the atmosphere (ppmw)

As shown in Equation 8-4, the total emissions from the cooling water are the sum of all component species emitted and can be summed specifically for VOC or organic HAP:

$$E_{Total} = \sum_{i=1}^{n} E_i \qquad \text{(Eq. 8-4)}$$

Example 8-5: Calculation for Methodology Rank 3 for Cooling Towers

Given: Concentrations for total xylenes in the cooling water are determined semi-annually. During the first measurement event the concentration of xylene in the cooling water return line before exposure to the atmosphere was 0.220 ppmw and 0.080 ppmw in the cooling water flow to the heat exchanger after exposure to the atmosphere. Sampling during the second monitoring event showed xylene concentrations of 0.320 ppmw before and 0.100 ppmw after exposure to the atmosphere in the cooling tower. The cooling water recirculation rate averages 55,000 gal/min with a maximum recirculation rate of 65,000 gal/min. The cooling tower operated for 8,000 hours during the year. What are the annual and maximum hourly emissions of xylene from the cooling tower?

Solution: For monitoring that occurs semi-annually or less often attributing the emissions between monitoring events and the calendar year can be cumbersome. As no leak repair was conducted, it can be assumed that these two measurement are equally representative for the year. The average hourly emission rate of xylene is calculated using Equation 8-3 for each of the monitoring events as follows:

$$E_{i,1} = \frac{(0.22 - 0.08)}{10^6} \times 55{,}000 \frac{\text{gal}}{\text{min}} \times 8.34 \frac{\text{lb}}{\text{gal}} \times 60 \frac{\text{min}}{\text{hr}} = 3.85 \text{ lb/hr}$$

$$E_{i,2} = \frac{(0.32 - 0.10)}{10^6} \times 55{,}000 \frac{\text{gal}}{\text{min}} \times 8.34 \frac{\text{lb}}{\text{gal}} \times 60 \frac{\text{min}}{\text{hr}} = 6.05 \text{ lb/hr}$$

The average hourly emissions rate during the year can be calculated as the arithmetic average of these two hourly estimates, which is 4.95 lb/hr [(3.85+6.05)/2]. The annual emissions are then calculated based on the operating hours as: 4.95 lb/hr × 8,000 hours × 1 ton/2,000 lbs = 19.8 tons of xylene.

The maximum hourly emissions of xylene are calculated using they highest net measurement concentration and the maximum recirculation rate as follows.

$$E_{i,\max} = \frac{(0.32 - 0.10)}{10^6} \times 65{,}000 \frac{\text{gal}}{\text{min}} \times 8.34 \frac{\text{lb}}{\text{gal}} \times 60 \frac{\text{min}}{\text{hr}} = 7.16 \text{ lb/hr}$$

8.3 Methodology Rank 4 for Cooling Towers

Methodology Rank 4, similar to Methodology Rank 3, uses direct cooling water samples for analysis of VOC and HAP contained in the cooling water, and a water sample is taken and sent for laboratory analysis. Under Methodology Rank 4 for cooling towers, only one sample is taken of the cooling water prior to being exposed to the atmosphere to estimate emissions. In this method, it is assumed that 100% of the compound is emitted at the cooling tower. As such, this methodology will likely overestimate the cooling water emissions, and would be a conservative (i.e., resulting in greatest emissions) estimate.

The data necessary to implement Methodology Rank 4 for cooling towers include speciated compounds concentration in the cooling water and the cooling water flow rate. **Table 8-4** summarizes the data requirements of Methodology Rank 4.

Table 8-4. Data Requirements for Speciated Compound Emissions, Methodology Rank 4

Rank	Data That Must Be Collected	The Way in Which Data Are Obtained
Rank 4—speciated emissions	▪ Speciated compounds concentration measured in the inlet cooling tower return line (ppmw)	▪ Periodic sampling results using Method 8260B, including a measurement prior to exposure to the atmosphere
	▪ Cooling water flow recirculation rates (gal/min)	▪ Continuous measurements from pump flow rate curves, rotameters, or similar methods
	▪ Length of time of the monitoring period (hours)	▪ Assume the measured concentration has occurred for half of the time period since the last sampling date; if a leak occurs, then add the time period it takes to repair the leak

The component concentration in the cooling water before being exposed to the atmosphere is used with the cooling water flow rate to estimate the emissions from the cooling water. The following equation (Equation 8-5) should be used to calculate the emissions of components from the cooling water:

$$E_i = \frac{(C_{i,In})}{10^6} \times Flow_{CoolingWater} \times 8.34 \frac{\text{lb}}{\text{gal}} \times 60 \frac{\text{min}}{\text{hr}} \times H_{Year} \times \frac{1\,\text{ton}}{2000\,\text{lb}} \qquad \text{(Eq. 8-5)}$$

where:

$C_{i,In}$ = Concentration of component "i" in the cooling water prior to exposure to the atmosphere (ppmw)

Equation 8-5 is equivalent to Equation 8-3 with $C_{i,Out}$ set equal to zero. Thus, the calculations performed for Methodology Rank 4 for cooling towers is essentially identical to those for Methodology Rank 3 for cooling towers. Equation 8-4 can be used to calculate the total VOC or total organic HAP emissions from the cooling water.

8.4 Methodology Rank 5 for Cooling Towers

Methodology Rank 5 for cooling towers uses emission factors from AP-42 (U.S. EPA, 1995a; Sections 5.1 and 13.4). The AP-42 emission factors approved for use in Methodology Rank 5 for cooling towers are summarized in **Table 8-5**. The remainder of this section describes the use of these emission factors for different classes of pollutants.

Table 8-5. Methodology Rank 5 Default Emission Factors

Type of Cooling Tower	VOC Emission Factor (lbs/MMgal) [a]	Drift Factor (lbs/MMgal) [a]	PM_{10} Emission Factor (lbs/MMgal) [b]
Induced draft, counter flow	6.0	1,700	31.5
Induced draft, cross flow	6.0	1,700	40.8
Unspecified draft or flow type	6.0	1,700	35.0
Natural draft	6.0	73	No data

[a] Source: U.S. EPA, 1995a; presented in units of pounds per million gallons (lb/MMgal) of recirculation.
[b] Source: U.S. EPA, 1995a; calculated as the product of the drift factor from Table 13.4-1 and the total dissolved solids concentration in Table 13.4-2.

8.4.1 VOC and Volatile Organic HAP

Methodology Rank 5 for volatile organics from cooling towers uses the uncontrolled VOC emission factor given in AP-42 (U.S. EPA, 1995a; Section 5.1) of 6 pounds of total VOC per million gallons of water (MM gal) (equivalent to a concentration in the water of 0.7 ppmw). The controlled emission factor provided in AP-42 should not be used. The controlled emission factor only applies to refineries that directly monitor for hydrocarbons (and organic HAP) and repair leaks when they occur, in which case the refineries would have monitoring data to conduct emission estimates under Methodology Ranks 1, 2, 3, or 4 for cooling towers.

To estimate HAP emissions, refineries should use site-specific information on the composition of process streams cooled in heat exchangers and condensers if available. Process-specific concentrations, process-specific average concentrations, or site-specific refinery average stream concentrations should be used when available. If these data are not available, then the default average refinery process stream compositions given in Appendix A, *Average Stream Compositions*, **Table A-1**, may be used to speciate the VOC and generate HAP emissions estimates.

The data necessary to implement the Methodology Rank 5 for cooling towers include the AP-42 uncontrolled VOC emission factor, the cooling water flow rate, and the process stream composition. **Table 8-6** summarizes the data requirements of Methodology Rank 5.

Table 8-6. Data Requirements for VOC or Speciated VOC Emissions, Methodology Rank 5

Rank	Data That Must Be Collected	The Way in Which Data Are Obtained
Rank 5—estimated speciated emissions	▪ AP-42 uncontrolled emission factor for cooling towers of 6 pounds of VOC per million gallons of water	▪ Not applicable
	▪ Process stream composition data	▪ Measurement/sampling of process stream composition, engineering knowledge of process composition, or default average composition for the industry
	▪ Cooling water flow recirculation rates (gal/min)	▪ Continuous measurements from pump flow rate curves, rotameters, or similar methods
	▪ Operating hours (hours)	▪ Use operating hours of cooling tower or assume continuous operation (8,760 hr/yr, non-leap year)

The following equation (Equation 8-6) should be used to estimate VOC emissions:

$$E_{VOC} = EF_{Unc} \times Flow_{CoolingWater} \times 60 \frac{\text{min}}{\text{hr}} \times H_{Year} \times \frac{1\,\text{ton}}{2000\,\text{lb}} \qquad \text{(Eq. 8-6)}$$

where:

EF_{Unc} = Uncontrolled emission factor for cooling towers from AP-42 (Section 5.1)
= 6.0 pounds of VOC per 10^6 gallons of cooling water (lb/MMgal).

The following equation (Equation 8-7) should be used to estimate the emissions for a particular species component:

$$E_i = EF_{Unc} \times WtFrac_i \times Flow_{CoolingWater} \times 60 \frac{\text{min}}{\text{hr}} \times H_{Year} \times \frac{1\,\text{ton}}{2000\,\text{lb}} \qquad \text{(Eq. 8-7)}$$

where:

$WtFrac_i$ = Approximate weight fraction of component *i* in the cooling water

Example 8-6: Calculation for Methodology Rank 5 for Cooling Towers

Given: An unmonitored cooling tower with a water recirculation rate of 25,000 gal/min is servicing a heat exchanger cooling a reformulated gasoline stream. Estimate the annual VOC and HAP emissions from this cooling tower.

Solution: Equation 8-6 should be used to calculate the annual emissions of VOC, E_{VOC}:

$$E_{VOC} = \frac{6\text{ lb VOC}}{10^6\text{ gal}} \times 25{,}000\frac{\text{gal}}{\text{min}} \times 60\frac{\text{min}}{\text{hr}} \times 8{,}760hr \times \frac{1\text{ton}}{2000\text{ lb}} = 39.4\text{ ton VOC}$$

Without site-specific stream composition, use the default concentrations for reformulated gasoline in Appendix A, *Average Stream Compositions*, and use Equation 8-7 to estimate the emissions for each HAP component in the gasoline stream. For example, to calculate the annual emissions of benzene, the liquid composition for benzene is 0.7 wt%. Using this concentration in Equation 8-7 yields:

$$E_i = \frac{6\text{ lb VOC}}{10^6\text{ gal}} \times 0.007 \times 25{,}000\frac{\text{gal}}{\text{min}} \times 60\frac{\text{min}}{\text{hr}} \times 8{,}760hr \times \frac{1\text{ton}}{2000\text{ lb}} = 0.28\text{ ton Benzene}$$

Similarly, emissions of other consistuents are estimated as follows:

- Cumene of 0.19% by weight; emissions are 0.075 ton
- Ethylbenzene of 1.26% by weight; emissions are 0.50 ton
- Hexane of 1.36% by weight; emissions are 0.54 ton
- Naphthalene of 0.21% by weight; emissions are 0.083 ton
- Toluene of 7.0% by weight; emissions are 2.8 ton
- 2,2,4-Trimethylpentane of 1.1% by weight; emissions are 0.43 ton
- Xylene of 7.3% by weight; emissions are 2.9 ton

The total HAP emissions for this cooling tower are calculated by summing the emissions of the individual HAP; the total annual HAP emissions for this cooling tower are 7.6 tons.

8.4.2 Particulate Matter Emissions

Methodology Rank 5 for cooling towers uses the total liquid drift emission factors given in AP-42 (U.S. EPA, 1995a; Section 13.4), which are also provided for convenience in **Table 5-5**, and the total dissolved solids (TDS) weight fraction to estimate PM_{10} emissions. It is conservatively assumed that all TDS are in the PM_{10} size range.

Site-specific TDS concentration in the cooling water should be used when available (Methodology Rank 5A for PM from cooling towers). When direct TDS monitoring is not conducted, AP-42 (U.S. EPA, 1995a) recommends that the TDS be estimated from TDS concentration of the makeup water times the "cycles of concentration ratio" of a monitored parameter (Methodology Rank 5B for PM from cooling towers). The cycles of concentration ratio is the concentration of a monitored parameter (such as conductivity, calcium, chlorides, or phosphate) in the cooling tower recirculating water divided by the concentration of that measured parameter in the makeup water. Alternatively, Methodology Rank 5B for PM from cooling towers can use a direct correlationof a monitored parameter to TDS concentration. For

example, it is commonly suggested that the Equation 8-8 be used to estimate TDS concentration from conductivity measurements.

$$\text{TDS (ppmw)} = CF_{TDS} \times Conductivity\ (\mu\,\text{mho/cm})) \qquad \text{(Eq. 8-8)}$$

where:

TDS	=	Total dissolved solids concentration of the cooling water (ppmw)
Conductivity	=	Conductivity of cooling water (micromho per centimeter [µmho/cm]).
CF_{TDS}	=	Correlation factor to convert conductivity to TDS concentration (ppmw per µmho/cm)
	=	0.5 to 1.0; default is 0.67 (see http://www.appslabs.com.au/salinity.htm)

The correlation factor is dependent on the specific electrolytes present and the total concentration of electrolytes. At low conductivity (<1,000 µmho/cm), CF_{TDS} = 0.5. The correction factor increases with increasing TDS concentrations. A site-specific correction factor or curve should be used based on paired measurements over the range of typical measured conductivity values. Otherwise, the default correction factor of 0.67 should be used.

Once the the TDS weight fraction is determented, the PM_{10} emissions corresponding to the TDS measurement value is calculated using Equation 8-9.

$$E_{PM10} = EF_{Drift} \times WtFrac_{TDS} \times Flow_{CoolingWater} \times 60\frac{\text{min}}{\text{hr}} \times H_{Period} \times \frac{1\,\text{ton}}{2000\,\text{lb}} \qquad \text{(Eq. 8-9)}$$

where:

E_{PM10}	=	Emissions of PM_{10} during the measurement period (tons or tons per period)
$WtFrac_{TDS}$	=	Weight fraction of TDS (Note, 1,000 ppmw = 0.001 wt fraction)
H_{Period}	=	Number of hours associated with the monitored TDS concentration (hrs).

If no data are available to estimate TDS concentration in the cooling water, then the default average PM_{10} emission factors provided in **Table 8-5** (which are based in the TDS fraction from AP-42, Table 13.4-2) should be used. These default PM_{10} emission factors represent Methodology Rank 5C for PM from cooling towers. Emissions of PM_{10} are calculated using Equation 8-10, which is essentially identical to the calculation for total VOC emissions.

$$E_{PM10} = EF_{PM10} \times Flow_{CoolingWater} \times 60\frac{\text{min}}{\text{hr}} \times H_{Year} \times \frac{1\,\text{ton}}{2000\,\text{lb}} \qquad \text{(Eq. 8-10)}$$

where:

EF_{PM10}	=	Default emission factor for PM_{10} from cooling towers from **Table 8-5**.

Example 8-7: Calculation for Annual PM Emissions Using Methodology Rank 5B for PM from Cooling Towers

Given: A cooling tower with a water recirculation rate of 25,000 gal/min is sampled monthly for TDS. What are the annual emissions of PM_{10}? If the highest recirculation rate is 30,000 gal/min, what is the maximum hourly PM_{10} emissions rate?

Solution: Using the site-specific TDS fraction, the operating hours associated with each TDS concentration period can be determined using the midpoint method as shown in the following table (Column 3). Equation 8-9 is applied to each concentration period to calculate the emissions of PM_{10} for that period (Column 4). The sum of the emissions in Column 4 yields a total annual emissions of 22.7 tons (or 23 tons rounded to 2 significant digits).

1 Date	2 TDS Concentration (ppmw)	3 Hours Assigned to TDS Concentration	4 Emissions (tons for concentration period)
Jan 10 (startup Jan 1)	360	240+300=540	0.25
February 4	520	300+336=636	0.33
March 4	780	336+372=708	0.70
April 4	1,100	372+360=732	1.03
May 4	1,260	360+372=732	1.18
June 4	2,300	372+360=732	2.15
July 4	3,500	360+372=732	3.27
August 4	5,500	372+372=744	5.22
September 4	4,600	372+360=732	4.29
October 4	1,700	360+372=732	1.59
November 4	2,100	372+624=996	2.67
December (shutdown Dec 1 - not operating in December)	0	744	0.00
Total		8,760	22.7 ton

The maximum TDS concentration (5,500 ppmw) and the maximum cooling water recirculation rate of 30,000 gal/min is used in Equation 8-9 to calculate the maximum hourly PM_{10} emissions rate as follows:

$$E_{PM10} = \frac{1{,}700 \text{ lb drift}}{10^6 \text{ gal}} \times \frac{5{,}500 \text{ lb TDS}}{10^6 \text{ lb water}} \times 25{,}000 \frac{\text{gal}}{\text{min}} \times 60 \frac{\text{min}}{\text{hr}} = 14 \text{ lbs/hr } PM_{10}$$

Example 8-8: Calculation Using Methodology Rank 5C for PM from Cooling Towers

Given: A forced draft, cross-flow cooling tower with a water recirculation rate of 25,000 gal/min in service all year. No TDS concentration data are available. What are the annual emissions of PM_{10} emissions?

Solution: Since no TDS measurement data are available, use the default PM_{10} emission factors from **Table 8-5**. The appropriate emission factor for a forced draft, cross-flow cooling tower is 40.8 lb/MMgal. The cooling tower was operated all year (8760 hours). Using Equation 8-10, the annual emissions of PM_{10}, E_{PM10}, are calculated as follows:

$$E_{PM10} = \frac{40.8 \text{ lb PM}_{10}}{10^6 \text{ gal}} \times 25{,}000 \frac{\text{gal}}{\text{min}} \times 60 \frac{\text{min}}{\text{hr}} \times 8{,}760 \text{ hr} \times \frac{1 \text{ ton}}{2000 \text{ lb}} = 268 \text{ ton PM}_{10}$$

8.4.3 Non-volatile Organic HAP Emissions

Organic compounds with low volatility, such as most POM compounds, will not be effectively stripped from the cooling water. These compounds will tend to accumulate in recirculated cooling water, and will primarily be released as drift from the cooling tower. The emissions of these compounds can be estimated from their concentration in the cooling water and the liquid drift factor in the same manner used to calculate PM_{10} emissions using Equation 8-9.

8.4.4 Chlorine Emissions

Site-specific material balance may be one method of estimating chlorine emissions. Otherwise, limited information is available regarding chlorine emission factors for cooling towers. EPA is currently reviewing available data to develop guidance for estimating chlorine emissions from cooling towers. To aid in developing that guidance, EPA is seeking additional data and suggestions for emission estimation methodologies.

9. Loading Operations

Product or commodity loading emissions occur when vapor is displaced by the product or commodity when it is loaded into tank trucks, rail cars, and marine vessels (which include both ships and barges). The vapor may contain constituents from the material previously transported and from the product currently being loaded. HAP, VOC, and GHG are emitted from loading operations. Emission from loading operations should be estimated for all materials loaded into tank trucks, rail cars, and marine vessels such as final products, intermediates, additives, or wastes. Loading operations also include loading materials into drums or containers, such as LPG container filling operations or loading waste into drums for off-site disposal.

Loading emission estimates require information on the quantity of material loaded annually, the component composition of the material loaded and the vapor pressures of the components, the loading procedure, the type of vessel being loaded, and the effectiveness of the capture system and the controls used. Emissions from gasoline loading racks are regulated under the Petroleum Refinery MACT I (40 CFR Part 63, Subpart CC) and are limited to 10 milligrams of TOCs per liter of gasoline (Subpart CC references Subpart R, which references some requirements for 40 CFR Part 60, Subpart XX). Emissions from marine vessel loading operations for crude, gasoline, and other products are also regulated under the Petroleum Refinery MACT I (Subpart CC references the Marine Vessel Loading MACT in 40 CFR Part 63, Subpart Y) and are subject to a 97% emission-reduction requirement for existing sources and 98% emission-reduction requirement for new sources.

Emissions from loading operations may be reduced by using submerged loading or bottom loading. Additionally, emissions from loading operations may be captured and controlled using a vapor collection system and an add-on air pollution control device. Vapor balancing may be used as an alternative to add-on controls to reduce emissions from loading operations. If an add-on air pollution control device or a vapor balance system is used to capture and control emissions, then capture and control efficiencies should be included in the emission estimate.

Control devices used for loading operations typically include thermal or catalytic incinerators, adsorption systems, scrubbers, and flares. Vapor balancing systems are allowed as an option or an alternative for marine vessel loading operations under Subpart CC of the Petroleum Refinery MACT I. For loading racks subject to gasoline loading requirements, typically an EPA Method 25A or 25B performance test is conducted on the control device to collect outlet TOC concentration data and determine an outlet emission factor based on the volume of gasoline loaded (i.e., meet the less than 10 milligrams of total hydrocarbon per liter gasoline loaded [mg/L]). For marine vessel loading subject to requirements under Subpart CC MACT I, typically, a Method 25 performance test is conducted on the control devices to collect inlet and outlet TOC concentration data and determine a control efficiency.

Table 9-1 summarizes the hierarchy of loading operation emission estimation techniques. Within a given measurement method (or rank), there may be alternative methods for determining the constituent-specific emissions; these compositional analysis methods are also provided in order of accuracy. Methodology Ranks 1, 2, and 3 for loading operations only apply loading operations that are controlled; uncontrolled loading operations must estimate their emissions using Methodology Ranks 4 for loading operations. The remainder of this section provides additional details and guidance regarding the ways in which to implement these methods.

Table 9-1. Summary of Loading operations Emission Estimates

Rank	Measurement Method or Emission Factor	Compositional Analysis Data
1A	Direct measurement (CEMS) for both flow rate and gas composition	▪ Pressure, temperature, and moisture content (depending on the monitoring system)
1B	Direct measurement (CEMS) for both flow rate and THC	▪ Process-specific, service-specific concentrations based on measurement data
2	Direct measurement by EPA Method 18 (site-specific emission factor) and loading rate	▪ Not applicable
3	Direct measurement by EPA Method 25, Method 25A, or Method 25B (site-specific emission factor) and loading rates	▪ Process-specific, service-specific concentrations ▪ Process-specific average concentrations ▪ Site-specific refinery average stream concentrations ▪ Default process compositions
4	AP-42 emission factor (default emission factor) and loading rates	▪ Process-specific, service-specific concentrations ▪ Process-specific average concentrations ▪ Site-specific refinery average stream concentrations ▪ Default process compositions

9.1 Data Available on Product Composition and Properties

To speciate the emissions into VOC or HAP, facilities should use site-specific information on the composition of the material loaded if available (for more information, see Section 9.3.2, *Estimate Controlled or Uncontrolled Emissions and Speciate).* Data are often available on the product or commodity composition, sometimes for both the liquid and vapor phases and sometimes only for the liquid phase. Material-specific or site-specific concentrations should be used when available. If material-specific or site-specific data are not available, then the default average compositions for refinery process and product streams presented in **Table A-1** of Appendix A, *Average Stream Compositions*, may be used to speciate and generate VOC and HAP emission factors.

Other properties such as the MW of the liquid, the MW of the vapor, and the vapor pressure of a multicomponent product or commodity are also often available. When these data are not readily available at the refinery, data from various references can be used or can be calculated using basic principles. For instance, property data are available in AP-42, Section 7.1 (*Organic Liquid Storage Tanks*), in Table 7.1-2 for various petroleum fuels and in Table 7.1-3 for various petrochemicals (U.S. EPA, 1995a).

If the weight composition of a commodity is available but other property data are not, estimates can be made. Appendix A presents equations that may be used for calculating estimates of the liquid vapor pressure, the molecular weight of the vapor, and the weight fraction of the vapor given a known liquid component composition.

9.2 Methodology Rank 1 for Loading Operations

For pollutants such as THC, it is anticipated that some loading operations may have CEMS for measuring the composition and the gas flow rate of the emissions from loading operations. If such monitors are present, the methods in Section 4.1, *Methodology Rank 1 for Stationary Combustion Sources*, should be used to calculate emissions. Although it is unlikely that CEMS are used that can provide emissions for speciated organic compounds, if a facility monitors THC and has sampled the organic vapors to determine specific organic compound concentrations, then speciation profile developed from the sampling data can be used with the CEMS data for THC. The THC emissions would be reported as Methodology Rank 1A for loading operations and the speciated organic emissions would be reported as Methodology Rank 1B for loading operations.

9.3 Methodology Ranks 2 and 3 for Loading operations

Performance testing conducted at the refinery may be used to develop site-specific emission factors with emission data correlated to throughput. These site-specific emission factors may be used with throughput data to estimate the annual loading emissions.

For gasoline loading activities regulated under Petroleum Refinery MACT I (40 CFR Part 63, Subpart CC and Subpart R), refineries have conducted periodic EPA Method 18, Method 25A, or Method 25B testing for speciated hydrocarbons or for outlet nonmethane organic compounds (NMOC); determined the flow rate based on EPA Method 2A or 2B testing; and measured and recorded the gasoline loading throughput during the testing. The outlet test results on a mass basis are correlated with the gasoline throughput during the test to demonstrate that the refinery is meeting the 10 mg/L gasoline emission limitation. The test data could also be used to estimate the speciated hydrocarbons, total hydrocarbon, CH_4, NMOC, or VOC loading emissions into the atmosphere based on the mass emissions per volume loaded factor developed during the performance test and the annual quantity of that product loaded. It is important to note that when NMOC is used, a CH_4 emission factor may also be developed. Additional information about speciation of the gasoline or product either as site-specific information or as defaults may be used to estimate individual species component emissions.

For marine vessel loading regulated under the Marine Vessel Loading MACT (40 CFR Part 63, Subpart CC and Subpart Y), refineries have conducted EPA Method 2, 2A, 2C, or 2D flow rate testing and have conducted EPA Method 25 or 25A testing on the inlet and outlet streams of the control device to determine control device efficiency. The Marine Vessel Loading MACT requires initial performance testing of the control device, but it does not require ongoing or periodic testing. The outlet test data, along with the recorded product throughput during the testing, could also be used to estimate the total hydrocarbon, CH_4, NMOC, or VOC loading emissions per volume loaded factor. This factor and the annual loading data of the product can be used to estimate emissions. It is important to note that when NMOC is used, a CH_4 emission factor may also be developed. Additional information on speciation of the gasoline or product either as site-specific information or as defaults may be used to estimate individual species component emissions.

The data necessary to implement Methodology Ranks 2 and 3 for loading operations include the emission rate or emission factor (either speciated by component or as total hydrocarbon, CH_4, NMOC, or VOC) and throughput data of the products loaded. **Table 9-2** summarizes the data requirements of Methodology Ranks 2 and 3.

Table 9-2. Data Requirements for VOC or Speciated Emissions, Methodology Rank 1 or 2

Rank	Data That Must Be Collected	The Way in Which Data Are Obtained
Rank 2—speciated emissions	▪ Speciated component emission factor for a product (milligrams per liter [mg/L] or lb/gal)	▪ Periodic EPA Method 18 testing results
	▪ Throughput data by product over the time period of interest (gallons or liters)	▪ Volume flow rate measurements determined by flow meter or pump rates, gallons, or liters
Rank 3—VOC or total hydrocarbon emissions	▪ Total hydrocarbon or VOC emission factor for a product (mg/liter or lb/gal)	▪ Periodic EPA Method 25 or 25A testing results ▪ Spectiaion profile from measurement data or from process knowledge
	▪ Throughput data by product over the time period of interest (gallons or liters)	▪ Volume flow rate measurements determined by flow meter or pump rates, gallons, or liters

Equation 9-1 should be used to estimate the emissions of each product using emission rates or emission factors developed from testing.

$$E_{Li} = ER_{Li} \times Thruput \qquad \text{(Eq. 9-1)}$$

where:

E_{Li} = Emissions of component species "i" (lbs)
ER_{Li} = Emission rate of component species "i" (lb/gal)
Thruput = Throughput of product (gallons)

When ER_{Li} is based on total hydrocarbon, NMOC, or VOC, pollutant "i" is simply the total hydrocarbon, NMOC, or VOC. When ER_{Li} is based on single pollutant, pollutant "i" will be the individual pollutant. When ER_{Li} is based on total hydrocarbon, NMOC, or VOC (i.e., Method 25, 25A, or 25B testing), additional calculations are necessary to estimate individual pollutant emissions. To estimate the emissions of each pollutant, multiply Equation 9-1 for E_{Li} by the vapor weight fraction of the component "i", as shown in Equation 9-2.

$$E_{LSpecies} = ER_{Li} \times Thruput \times Wtfrac_{Species} \qquad \text{(Eq. 9-2)}$$

where:

$E_{LSpecies}$ = Emissions of component species "i" (lbs)
$Wtfrac_{Species}$ = Vapor weight fraction of component species "i" (fraction by weight)

If the vapor weight fraction of the components are not know, then these concentrations can be calculated from the product knowledge, i.e., the composition of compounds in the liquid. Appendix A, *Average Stream Compositions*, presents the methodology for calculating the vapor phase concentration based on the liquid-phase composition and the system temperature and pressure. It is important to characterize even low levels of the most volatile compounds in the liquid, because even low levels of the most volatile compounds can significantly affect the vapor phase concentration. An example calculation is provided in **Example A-1** of Appendix A.

9.4 Methodology Rank 4 for Loading operations

The emission estimating methodology for loading operations is given in AP-42 (U.S. EPA, 1995a); these methodologies are for loading operations that are vented directly to the atmosphere. Equations are provided in this section for estimating controlled emissions from the "uncontrolled" emissions based on the capture and control efficiency. In section 5.2 of AP-42, commodities are categorized into crude loading, gasoline loading, and what is termed "other products" (i.e., not crude or gasoline). In the AP-42 methodology, there is one equation that is used for tanker trucks and rail cars for crude, gasoline, and other commodity products and for marine vessels for other commodity products (but not for crude or gasoline). In addition, Table 5.2-2 in AP-42 presents other emission factors that are used for marine vessels for gasoline. These equations provide the emissions for the "product" or "total hydrocarbon," whether that product has multiple component species (e.g., gasoline) or whether that product is a single species (e.g., toluene). Depending on the commodity being loaded, the emission factor (EF_L) could be used for gasoline emissions, crude emissions, or other product emissions. The AP-42 methodology for gasoline and other products is summarized in the following sections. It is not expected that refineries will be loading crude for transport, but if so, the refiner should consult AP-42 for the emission estimation methodology.

9.4.1 AP-42 Emission Factors for "Product" or "Total Hydrocarbon" Emissions

9.4.1.1 Tanker Trucks and Railcars (Any Commodity) and Marine Vessels (Products Other than Gasoline and Crude Oil)

Equation 9-3 should be used to estimate the uncontrolled emission factor or the emission rate for the product loaded, in terms of total hydrocarbon or the product:

$$ER_L = 12.46 \times \frac{S \times P \times MW_{Vap}}{T} \qquad \text{(Eq. 9-3)}$$

where:

ER_L = Loading emission factor or emission rate for the product (or total hydrocarbon) loaded (in lb per 10^3 gallons of liquid loaded)
S = Saturation factor (see **Table 9-3**)
P = True vapor pressure of liquid loaded (pounds per square inch absolute [psia])[1]
MW_{Vap} = Molecular weight of vapors (lb/mol)
T = Temperature of bulk liquid loaded (°R; °F + 460)

Table 9-3. Saturation Factors[a]

Type of Tanker Loaded	Loading Scenario	Saturation Factor
▪ Tank trucks ▪ Rail cars ▪ Any commodity	▪ Submerged loading ▪ Dedicated normal service	0.60
	▪ Submerged loading ▪ Dedicated vapor balance service	1.00
	▪ Splash loading ▪ Dedicated normal service	1.45
	▪ Splash loading ▪ Dedicated vapor balance service	1.00
▪ Marine vessels ▪ Other products (only)	▪ Submerged loading ▪ Ships	0.2
	▪ Submerged loading ▪ Barges	0.5

[a] Source: U.S. EPA, 1995.

9.4.1.2 Marine Vessels (Gasoline)

Section 5.2, Table 5.2-2, of AP-42 provides VOC emission factors for marine vessels loading gasoline at marine terminals based on measurements of gasoline loading losses from ships and barges. Those emission factors are presented in **Table 9-4**. (Table 5.2-2 of AP-42 also includes emission factors in units of mg/L.) AP-42 does not provide ratings for these emission factors.

[1] True vapor pressure is defined as the equilibrium partial pressure exerted by a volatile organic liquid as a function of temperature. It differs from the Reid vapor pressure, which is defined as the absolute vapor pressure exerted by a liquid at 100°F and is a common measure of the volatility of petroleum liquids. For a pure component at 100°F, the true vapor pressure is equivalent to the Reid vapor pressure.

Table 9-4. VOC Emission Factors for Marine Vessel Loading of Gasoline at Marine Terminals[a]

Vessel Tank Condition	Previous Cargo	Ships and Ocean Barges (lb/10^3 gal)	Barges (lb/10^3 gal)
Uncleaned	Volatile[c]	2.6	3.9
Ballasted	Volatile	1.7	Not applicable
Cleaned	Volatile	1.5	No data
Gas-freed	Volatile	0.7	No data
Any condition	Nonvolatile	0.7	No data
Gas-freed	Any cargo	No data	2.0
Typical overall situation[d]	Any cargo	1.8	3.4

[a] Source: U.S. EPA, 1995a. The emission factors for VOC (which excludes methane and ethane) may be used to estimate total organic emissions (i.e., including methane and ethane) because methane and ethane constitute a negligible fraction of the components in gasoline.

[b] Ocean barges (tank compartment depth about 40 ft) exhibit emission levels similar to tank ships. Shallow draft barges (compartment depth 10 to 12 ft) exhibit higher emission levels.

[c] Volatile cargoes are those with a true vapor pressure greater than 10 kilopascals (kPa) (1.5 psia).

[d] Based on observation that 41% of tested ship compartments were uncleaned, 11% ballasted, 24% cleaned, and 24% gas-freed. For barges, 76% were uncleaned.

9.4.2 Estimate Uncontrolled Emissions and Speciate

Using the emission factor developed or identified from the methods previously discussed, the emissions can be estimated based on Equation 9-4:

$$E_L = ER_L \times Thruput \qquad \text{(Eq. 9-4)}$$

where:

E_L = Uncontrolled emissions (lb) of commodity
ER_L = Loading emission rate (lb/10^3 gal of liquid loaded)
Thruput = Throughput of commodity (gallons)

As previously discussed, depending on the commodity being loaded, the emission rate ER_L could be for gasoline, crude, or other product. Also as previously discussed, to speciate the emissions for specific components, the composition or concentration data available (i.e., product-specific, product-specific average, site-specific product, or default averages) can be used as shown in Equation 9-5.

$$E_{LSpecies} = ER_L \times Thruput \times Wtfrac_{Species} \qquad \text{(Eq. 9-5)}$$

where:

$E_{LSpecies}$ = Emissions (lb) of the component species "i"
$Wtfrac_{Species}$ = Weight fraction of component species "i" in the vapor (fraction)

9.4.3 Capture Efficiency

If an add-on air pollution control device or vapor balance system is used to capture and control emissions, then capture and control efficiencies should be included in the emission estimate. The capture efficiency is the portion of the total emissions that is captured by the vapor collection system. The effectiveness of the vapor collection system, or capture system, is dependent on the leak tightness of the truck tank, rail car, or marine vessel; the condition of the connection from the tanker or vessel collection header equipment to the vapor collection system; the leak tightness of the terminal's vapor collection system; and the control device. For gasoline loading racks subject to Subpart CC, refineries are required to confirm

and document the vapor tightness of the vehicles being loaded. For loading racks subject to gasoline loading requirements, an annual pressure and vacuum certification is required on the tanker truck (e.g., using EPA Method 27 in 40 CFR Part 60), a leak test using EPA Method 21 from 40 CFR Part 60 may be performed on the tanker truck, and a leak check using EPA Method 21 may be conducted on the terminal's vapor collection system. In addition, the type of loading conducted (i.e., atmospheric, pressurized) and type of connection from the tank headspace to the vapor collection system and to the control device are factors. Typical capture efficiencies assumed for vapor collection procedures and systems are shown in **Table 9-5**. Capture efficiency for the vapor collection system can be applied based on the leak check conducted for the tanker truck, rail car, and marine vessel.

Table 9-5. Capture Efficiencies for Vapor Collection Systems[a]

Loading Characteristics and Leak Check Frequency for Tankers	Capture Efficiencies
▪ No leak check on tanker	65%
▪ No leak check on tanker ▪ Maintain minimum positive pressure below +3 to +5 inches of water	85%
▪ Annual leak check on tanker per 40 CFR Part 60, Subpart XX (nongasoline)	95%
▪ Semi-annual leak check on tanker per 40 CFR Part 60, Subpart XX (nongasoline)	97.5%
▪ Annual leak check on tanker per 40 CFR Part 60, Subpart XX (gasoline)	98.7%
▪ Vacuum loading, maintaining vacuum less than −1.5 inches of water ▪ Hard-piped bolted, flanged connection from tanker to the vapor collection system	100%
▪ Pressure tank that is U.S. Department of Transportation certified ▪ Hard-piped bolted, flanged connection from tanker to the vapor collection system	100%

Note: Use latest available version if updates to this document have occurred since the cited version.
[a] Source: TCEQ, 2000.

9.4.4 Overall Control Efficiency

The overall control efficiency represents the portion of the total captured emissions that are removed from the emission stream by the add-on air pollution control device. The control efficiency determined for the control device should be applied based on performance testing, if available, or based on design efficiency and operating parameters.

To estimate controlled emissions from loading, use Equations 9-6 and 9-7 to apply the capture efficiency and the control efficiency to the uncontrolled emissions:

$$E_{Cont} = ER_L \times Thruput \times \left[(1 - Capture) + \left(Capture \times (1 - CE)\right)\right] \quad (9\text{-}6)$$

$$E_{ContSpecies} = ER_L \times Thruput \times Wtfrac_{Species} \times (1 - Capture) \times (1 - CE) \quad (9\text{-}7)$$

where:

Capture = Capture efficiency of the vapor collection system (fraction)
CE = Control efficiency of the add-on air pollution control device (fraction)

Example 9-1: Calculation for Rank 4—When Property Data Are Not Available

Calculate the VOC and HAP emissions for submerged loading of reformulated gasoline into dedicated-service gasoline transport tank trucks (each with a volume of 8,000 gallons) based on the following information:

The refinery loads 210 tank trucks per year, with 100 tank trucks loading gasoline at a bulk temperature of 90°F, 55 loading at a bulk temperature of 77°F, and 55 loading at a bulk temperature of 40°F. Liquid composition or vapor-phase property data are not available,so the property data for liquid composition of reformulated gasoline in Appendix A are used (see **Tables A-1** and **Table A-2)**.

First, the vapor pressure of reformulated gasoline and MW_{VAP} must be calculated. In this example, the weight fraction of the vapor is estimated separately for each loading temperature following the calculation methodology presented in Appendix A (see Example A-1 and **Table A-2**). The vapor pressure for each constituent is determined at the three loading temperatures using Antoine's equation and Antoine's coefficients, such as those provided in Table 7.1-5 of AP-42 (U.S. EPA, 1995a).

From Example A-1 in Appendix A, at 77°F, the total system vapor pressure is 4.77 psia and the MW of the vapor, $MW_{GasolineVAP}$, is 67.49 lb/lb-mol. Similar calculations for loading gasoline with bulk temperatures of 90°F and 40°F reveal the following (see Appendix A for further details):

Temperature	Vapor Pressure	$MW_{GasolineVAP}$
90°F	6.13 psia	68.08 lb/lb-mol
77°F	4.77 psia	67.49 lb/lb-mol
40°F	2.17 psia	65.79 lb/lb-mol

Example 9-1 (continued): Calculation for Rank 4—When Property Data Are Not Available

The emissions rates at each temperature are calculated using Equation 9-3:

$$ER_{Gasoline90} = 12.46 \frac{0.60 \times 6.13\text{psia} \times 68.08 \frac{\text{lb}}{\text{lb-mole}}}{(90°\text{F} + 460)°\text{R}} = 5.673 \text{ lb/}10^3 \text{ gal}$$

$$ER_{Gasoline77} = 12.46 \frac{0.60 \times 4.77\text{psia} \times 67.49 \frac{\text{lb}}{\text{lb-mole}}}{(77°\text{F} + 460)°\text{R}} = 4.482 \text{ lb/}10^3 \text{ gal}$$

$$ER_{Gasoline40} = 12.46 \frac{0.60 \times 2.17\text{psia} \times 65.79 \frac{\text{lb}}{\text{lb-mole}}}{(40°\text{F} + 460)°\text{R}} = 2.135 \text{ lb/}10^3 \text{ gal}$$

The emissions at each temperature are then calculated using Equation 9-4:

$$E_{Gasoline90} = \frac{5.673 \text{ lb}}{1{,}000 \text{ gal}} \times \left(8{,}000 \frac{\text{gal}}{\text{truck}} \times 100 \text{ trucks}\right) = 4{,}538 \text{ lb gasoline}$$

$$E_{Gasoline77} = \frac{4.482 \text{ lb}}{1{,}000 \text{ gal}} \times \left(8{,}000 \frac{\text{gal}}{\text{truck}} \times 55 \text{ trucks}\right) = 1{,}972 \text{ lb gasoline}$$

$$E_{Gasoline40} = \frac{2.135 \text{ lb}}{1{,}000 \text{ gal}} \times \left(8{,}000 \frac{\text{gal}}{\text{truck}} \times 55 \text{ trucks}\right) = 939 \text{ lb gasoline}$$

The individual VOC or HAP species at each bulk temperature can be estimated using the calculated gasoline vapor weight fraction for each species in Equation 9-5:

$$E_{LSpecies} = EF_L \times Thruput \times Wtfrac_{Species} = E_{gasoline} \times Wtfrac_{Species}$$

See **Table 9-6** for the emission estimate summary for individual HAP species.

Finally, total emissions are estimated by summing the emission estimates for each of the three bulk temperatures. Total gasoline emissions (VOC) are 7,449 lb (4,538 lb + 1,972 lb + 939 lb), or 3.7 tons (7,449 lb ÷ 2,000 lb/ton).

Similarly, total emissions of each of the individual HAP species are estimated by summing the emission estimates for each of the three bulk temperatures. The results are presented in **Table 9-6**.

Table 9-6. Sample Calculation Methodology Rank 4—Summary of Emissions (When Property Data Are Not Available)

CAS Number	Component "i"	At 40°F Gasoline, Vapor, wt%	At 40°F $E_{Gasoline}$ = 939 lb $E_{LSpecies}$ "i" (lb)	At 77°F Gasoline, Vapor, wt%	At 77°F $E_{Gasoline}$ = 1,972 lb $E_{LSpecies}$ "i" (lb)	At 90°F Gasoline, Vapor, wt%	At 90°F $E_{Gasoline}$ = 4,538 lb $E_{LSpecies}$ "i" (lb)	Sum Total Annual Emissions (lb)
71-43-2	Benzene	0.33	3.14	0.42	8.24	0.45	20.22	31.60
110-54-3	Hexane	0.96	9.05	1.13	22.30	1.18	53.64	84.99
108-88-3	Toluene	0.77	7.23	1.09	21.55	1.21	55.01	83.80
1330-20-7	Xylene	0.22	2.02	0.35	6.93	0.41	18.46	27.41
100-41-4	Ethylbenzene	0.04	0.38	0.07	1.30	0.08	3.45	5.13
540-84-1	2,2,4-Trimethylpentane	0.23	2.15	0.30	5.87	0.32	14.58	22.59
98-82-8	Cumene	0.0027	0.025	0.0048	0.094	0.0057	0.26	0.38
91-20-3	Naphthalene	0.0001	0.001	0.0003	0.006	0.0004	0.018	0.025
	Total HAP		**24.0**		**66.3**		**165.6**	**255.9**

10. Fugitive Dust Sources

There are three main sources of fugitive dust (or PM) at a petroleum refinery: roads (paved and unpaved); fluid catalytic cracking catalyst handling; and petroleum coke storage and handling. Petroleum refineries may also operate a landfill or land application unit, which would also be a source of fugitive PM emissions. There are no direct emission measurement methodologies commonly employed for fugitive dust sources. Fugitive dust sources are described in Chapter 13 of AP-42 (U.S. EPA, 1995a). Unfortunately, none of the default factors for the fugitive dust emission correlations are specific to petroleum refineries. **Table 10-1** provides recommended default values for the correlations based on a review of the available data. The methodologies are detailed in Chapter 13 of AP-42 and basic guidance for applying the methodologies are provided below.

- For paved roads, Equation 1 of Section 13.2.1.3 of AP-42 (U.S. EPA, 1995a) should be used with the silt loading recommended in **Table 10-1**; values for all other equation variables are provided in Section 13.2.1.3.
- For unpaved roads, Equation 1a and 1b of Section 13.2.2.2 of AP-42 (U.S. EPA, 1995a) should be used with the silt content recommended in **Table 10-1**; values for all other equation variables are provided in Section 13.2.2.2.
- For handling of FCCU catalyst or petroleum coke, use Equation 1 of Section 13.2.4.3 of AP-42 (U.S. EPA, 1995a) with the moisture content recommended in **Table 10-1**; values for all other equation variables are provided in Section 13.2.4.3.

Table 10-1. Default Values for Fugitive Dust Emission Estimates

Source/Variable Description	Potential Range Value	Recommended Value
Paved road : silt loading, g/m^2	0.4[a] – 120[b]	10
Unpaved road : silt content %	1.8 – 25.2[c]	7
FCCU catalyst “drops”: silt content %		50[d]
FCCU catalyst “drops”: moisture content %		8[e]
FCU or calcined coke “drops”: silt content %		5[e]
FCU coke or calcined “drops”: moisture content %		8[e]
Delayed coking unit coke “drops”: silt content %		5[e]
Delayed coking unit coke “drops”: moisture content %		10[f]
Flexicoking or petroleum coke ash: silt content %		13[g]
Flexicoking or petroleum coke ash: moisture content %		7[g]

[a] Based on low average daily traffic (ADT) public road factor in Table 13.2.1-3 in AP-42.
[b] Based in asphalt batching industrial facility factor in Table 13.2.1-4 in AP-42.
[c] Based on range for industrial sites in Table 13.2.2-3 in AP-42.
[d] Assumed based on median particle size of FCCU catalyst and equilibrium catalyst (E-cat) of 65 µm.
[e] Values for coke breeze assumed to apply.
[f] Value suggested as typical by industry representatives (API/NPRA, 2010).
[g] Values for flue dust assumed to apply.

The methodologies outlined in Chapter 13 provide means of estimating PM_{10} and $PM_{2.5}$ emissions. These emissions are all filterable PM so that PM10-PRI = PM10-FIL and PM25-PRI = PM25-FIL. For FCCU catalyst handling emissions and for petroleum coke handling activities, emission estimates should also be provided for metal HAP emissions. Concentrations of specific metal HAP are commonly determined for the FCCU equilibrium catalyst; these concentrations can be used times the PM_{10} emission rate to

determine the metal HAP emission rate from FCCU catalyst and E-cat handling (external from the FCCU). **Table 5-3** provides concentration ratios of various metal HAP to nickel on CCU fines. These concentration ratios can be used to augment the FCCU catalyst and E-cat metal HAP emission estimates when only nickel concentrations are routinely determined. Compositional analysis of petroleum coke material or ash should also be determined so that the metal HAP emissions from petroleum coke or ash handling can be reported.

11. Startup and Shutdown

Except for the CEMS-based measurements (i.e., Methodology Rank 1), most of the emission estimation methods provided in this Refinery Emissions Protocol document characterize the emissions during normal operating conditions. However, during startup and shutdown, the process operations are not normal. During startup, the reactor temperatures may not be sufficient for the necessary reactions to occur or the process flow rate may be well below typical operating conditions. Under these conditions, processes that do not typically have atmospheric emissions may have significant emissions. While most control devices will operate well at lower vent rates, some control devices, such as venturi scrubbers, require a minimum flow for effective operation. During startup and shutdown, the emission characteristics of the processes may be significantly different than those during normal operations. When the emission estimation methodology relies on normal operating conditions (e.g., most site-specific and default emission factors), it is important to specifically estimate the emissions during startup and shutdown and include these emissions in the facility's annual emission totals. During shutdown, the process vessels need to be degassed and purged.

Process unit startup and shutdown of one process unit may also affect the emission characteristics of other units, particularly with respect to the fuel gas system. When a hydrotreater or hydrocracking unit is shutdown, this often leads to excess hydrogen being added to the fuel gas. This leads to higher NO_x emissions from process heaters. When certain energy intensive units, such as catalytic reforming units, are shutdown, the refinery may have excess fuel gas, which is subsequently flared. Depending on the methods used to estimate emissions from combustion sources and flares, these fuel gas fluctuations may already be fully accounted within the inventories for combustion sources and flares. However, if default estimates (or site-specific estimates based on source tests conducted under typical operating conditions) are used, then emissions during these significant fuel gas fluctuation events should be estimated and the emissions included in the annual emission values.

It is beyond the scope of this protocol document to provide methods of estimating emissions during all startup or shutdown events. However, the primary emission event during startup or shutdown is expected to be vessel depressurization and purging (or degassing). Methods are provided in this section to account for these events are described in this section.

11.1 Gaseous Process Vessel Depressurization and Purging

Process vessel depressurization for gaseous processes can be estimated using **Equation 11-1**. This equation assumes ideal gas law; for gases that do not follow ideal gas law, compressibility factors can be included. The equation includes a void fraction term to account for inert material, such as packing material, distillation trays, and certain catalyst particles, that reduce the gaseous space. This equation may underestimate the emissions if the solid material in the vessel may adsorb certain gas constituents (e.g., petroleum coke or activated carbon), that can desorb at lower pressures and temperatures.

$$E_i = \left(\frac{(P_V + 14.7)}{14.7} \times \frac{528°\text{R}}{T_V} \times [V_V \times f_{void}] \times \frac{MW_i}{MVC} \times MF_i \right) \qquad \text{(Eq. 11-1)}$$

where:

E_i = Emissions of pollutant "i" during depressurization event (lbs/event).
P_V = Gauge pressure of the vessel when depressurization gases are first routed to the atmosphere (pounds per square inch gauge, psig).
14.7 = Assumed atmospheric pressure (pounds per square inch, psi).
T_V = Absolute temperature of the vessel when depressurization gases are first routed to the atmosphere (degrees Rankine, °R).

528 = "Standard" temperature used in the calculation (°R).
V_V = Volume of the vessel (cubic feet, ft^3).
f_{void} = Volumetric void fraction of vessel. Use 1 unless packing material or trays are present in the vessel.
MW_i = Molecular weight of pollutant "i" (lb/lb-mole).
MVC = Molar volume conversion factor (385.3 scf/ lb-mole).
MF_i = Volume fraction of pollutant "i" in vessel gas (scf pollutant i/scf of gas).

Typically, depressurization and purging occurs initially to the refinery fuel gas system or a flare or similar control device. Combustion of gases purged to the refinery fuel gas system (either directly or via a flare gas recovery system) should be accounted for under stationary combustion source emissions regardless of the methodology used for stationary combustion sources. Depending on the methodology used to estimate the emissions from the flare, these gas flows may or may not be included in the flare emission estimates. If the flow rate and composition or heating value of the flare gas is measured (Methodology Ranks 1, 2 or 3 for flares), special calculations are not needed because episodic releases to the flare, such as those from depressurization and purging events, are adequately accounted for. If the flare emission methodology does not account for these flows (e.g., default factors in Methodology Rank 6 for flares), Equation 11-1 can be used to estimate the mass of gas sent to the flare or other control device (using initial depressurization temperatures and pressures) and these mass rates can be adjusted by the flare or control device efficiency to estimate the emissions during the controlled venting period. The use of Equation 11-1 is illustrated in **Example 11-1**, G*aseous Depressurization Calculation*.

11.2 Liquid Process Vessel Depressurization and Purging

For vessels that contain liquids, depressurization and purging emissions can be estimated based on the "heel" or fraction of the liquid that remains in the vessel prior to purging. This method assumes that the mass of liquid remaining in the tank will overwhelm the quantity of contaminants in the headspace. For systems operating with very volatile material (such as butane in gasoline), it may be necessary to consider the initial gaseous emissions for the most volatile components (using Equation 11-1) as well as the liquid heel. A heel fraction may be between 0.1 and 1 percent, depending on the viscosity of the liquid, the surface area of internals within the vessel, and the location of the drainage port or pump line (higher viscosities, higher internal surface areas, and higher drainage port locations will increase the heel fraction). Using the heel method, it is assumed the entire liquid heel is eventually volatilized. Knowledge of the process stream can be used to speciate the emissions. Again, some of the heel may be purged to a flare or other control device and a control efficiency for this portion is warranted, but some fraction will also be purged directly to the atmosphere. **Example 11-2**, *Liquid Heel Emissions Calculation*, illustrates this methodology.

Example 11-1: Gaseous Depressurization Calculation

A catalytic reforming unit is depressurized and purged to a flare. After the purge sequence, no liquid materials are assumed to be present. The reactor is then depressurized and purged to the atmosphere. The total volume of the reactor vessels are 20,000 ft^3 and the catalyst occupies 40% of the total reactor volume. The temperature and pressure of the vessel when first purged to the atmosphere are 250°C and 10 psig, respectively. The composition of the gas is in the reactor vessel after the flare purge is:

Benzene = 1.2 vol%
Hexane = 0.5 vol%
Toluene = 1.4 vol%
Xylenes = 0.8 vol%
Other VOC = 2.1 vol%
Nitrogen = 94 vol%

For use in Equation 10-1, the reactor vessel temperature must be converted to °R: 250°C = 250×9/5 + 32 = 482°F = 482+460 = 942°R.

The void fraction is the volume fraction not occupied by catalyst particles: 1-0.4 = 0.6.

The molecular weight of the constituents listed range from 78 to 106 lb/lb-mol. It is assumed the "other VOC" has similar molecular weight so a molecular weight for this unspecified material is estimated from, the weighted average molecular weight of the known organic constituents: MolWt "other VOC" = (1.2×78+0.5×86+1.4×92+0.8×106)/4.9 = 90 lb/lb-mol.

Using benzene as the example, substituting into Equation 11-1 yields:

$$E_i = \left(\frac{(10+14.7)}{14.7} \times \frac{528°\text{R}}{942} \times [20000 \times 0.6] \times \frac{78}{385.3} \times 0.01 \right) = 27.5\,\text{lbs} = 0.014\,\text{tons}$$

Similarly, the emissions of other organic constituents are estimated to be:

Benzene = 27.5 lbs/event
Hexane = 12.6 lbs/event
Toluene = 37.8 lbs/event
Xylenes = 24.9 lbs/event
Other VOC = 55.4 lbs/event

The total VOC is the sum of these emissions, which is 158 lbs/event or 0.079 tons/event. If this event occurred twice during the year, the annual emission would be 0.16 tons VOC/yr.

Example 11-2: Liquid Heel Emissions Calculation

Problem: Using the same catalytic reforming unit as in Example 11-1, estimate the emissions from depressurizing and purging the reactor vessels using the "heel" approach. Assume 90 percent of the heel is purged to the flare.

Solution: As there is high internal surface area, the heel is assumed to be 0.5% of the liquid volume. The maximum liquid volume is 20,000 ft^3 × (1-0.4) = 12,000 ft^3, so the volume of liquid in the reactor is estimated to be 60 ft^3 (12,000 × 0.005).

Appendix A contains average composition of various process fluids. Reformate composition is given as:

Benzene = 4.6 wt%
Hexane = 3.9 wt%
Toluene = 14.5 wt%
Xylenes = 13.8 wt%
Other VOC = 63.2 wt%

To calculate the potential mass emissions, a mass of liquid remaining must be calculated. Using a specific gravity of 0.8 for reformate, the mass of liquid remaining is estimated to be: 60 ft^3 × 0.8 × 62.4 lb/ft^3 (density of water) = 3,000 lbs.

Given 90 percent of the heel liquid is removed while purging to the flare, then 2,700 lbs of material is sent to the flare and 300 lbs are purged directly to the atmosphere. Assuming a 98 percent destruction efficiency for the flare, the uncombusted emissions from the flare are estimated to be 54 lbs [2700×(1-0.98)].

Therefore, a total of 354 lbs of organic material (VOC) is estimated to be emitted considering emissions from both the flare and atmospheric purging.

Emissions of specific constituents are calculated based on the mass composition in the liquid:

Benzene = 354 ×0.046 = 16 lbs/event
Hexane = 354 ×0.039 = 14 lbs/event
Toluene = 354 ×0.145 = 51 lbs/event
Xylenes = 354 ×0.138 = 49 lbs/event
Other VOC = 354 ×0.632 = 224 lbs/event.

12. Malfunctions/Upsets

Malfunctions or upsets may occur either within the process unit or to a control device used to reduce a source's emissions. During malfunction/upset events (hereafter simply referred to as malfunction events), emissions may be significantly higher than the emissions that occur under normal operating conditions. Except for the CEMS-based measurements (i.e., Methodology Rank 1), most of the emissions estimation methods provided in this Refinery Emissions Protocol document characterize the emissions during normal operating conditions. As such, emissions during malfunction events must be accounted for separately for each malfunction event and these malfunction/upset emissions must be added to the normal process emissions to accurately estimate annual emissions.

Because of the myriad of potential malfunction events that could occur, it is impossible to provide specific guidance for all possible malfunction scenarios. However, because malfunction events are important to both annual and short-term emissions, the duration and emissions associated with each malfunction event should be recorded, and these emissions should be included in the annual emissions reported in response to the ICR.

The following list provides specific events for which malfunction/upset emissions estimates should be made to accurately account for these emissions. Again, this is not intended to be an exhaustive list, but rather representative examples. In some malfunction events, such as pressure relief valve opening to a flare during a system over-pressurization event, the emissions during the malfunction event may be adequately accounted for by the flare emission methodology (i.e., when using continuous monitoring of gases is sent to a flare), but in other cases it may not (i.e., when using default factors). As such, emissions inventory developers will need to evaluate the malfunction events in light of their inventory methods to determine if it is appropriate to use special malfunction emission calculations. Emission estimates should be provided for the following malfunction events:

1. Any instance when a control device is bypassed or is not functioning properly.
2. Any instance when the amine scrubbing system and/or sulfur recovery plant is offline or not operating at normal efficiencies (generally affecting SO_2 emission estimates from combustion sources, flares, and/or sulfur recovery plants).
3. Instances of over-steaming a flare (steam-to-gas ratios exceeding 4) or instances where the flare operating conditions do not satisfy 40 CFR 60.18 (i.e., inadequate BTU content, exit velocities exceeding limits). Eighty percent flare destruction efficiencies should be used during periods of over-steaming; 93 percent flare destruction efficiencies should be used during periods when the flare operating conditions do not satisfy 40 CFR 60.18.
4. Any instance when a spill or similar emergency release occurs.

Leaks identified as part of a LDAR work practice (for equipment leaks or cooling towers) are not considered malfunction events, and these emissions are covered using the methodologies presented in Section 2, *Equipment Leaks*, and Section 8, *Cooling Towers*, of this Refinery Emissions Protocol document. Note, however, the methodology for spills presented in this section can be used for estimating emissions from equipment leaks that result in liquid puddles. As noted in Section 3, *Storage Tanks*, of this Refinery Emissions Protocol document, specific calculations should be made for tank roof landings. The emissions from tank roof landings are independent of the cause of the landing (intentional or unintentional), so there is no need to distinguish between landings that occur as a result of a "malfunction event" or for another reason.

There are three types of malfunction events considered in this section: control device malfunctions; process vessel overpressurization; and spills.

12.1 Control Device Malfunctions

When a control device is used to reduce the emissions from a particular source, the site-specific emission factors or other methodologies provided in this Refinery Emissions Protocol document account for these controls when the equipment is operating normally. However, when control systems are not operating normally or or bypassed the emissions may be orders of magnitude more than when these emissions are controlled. If a control device that normally achieves 99% control efficiency is offline for 3 days, then the emissions during these 3 days would equal the annual emissions projected for the controlled emission source.

When there is a malfunction with a control device, the emissions from the source can be estimated based on the uncontrolled emission factor or by adjusting the controlled emissions based on the control device's efficiency. It is important to note that the control device efficiency is often different for different pollutants. A wet scrubber on an FCCU may be 95% efficient at reducing SO_2 emissions, 90% efficient for PM and metal HAPs, but has no real impact on VOC or NO_X emissions. Similarly, oversteaming a flare that causes poor combustion efficiency will increase VOC and reduced sulfur emissions but reduce NO_X and SO_2 emissions. **Table 12-1** provides default control efficiencies and correction factors for certain control device malfunctions. If site-specific emission data are available for the controlled emissions, then the "uncontrolled" emissions during the control device malfunction or bypass can be estimated using Equation 12-1.

$$E_{unc,i} = E_{cont,i} \times EM_{cont,i} \times t \qquad \text{(Eq. 12-1)}$$

where:

$E_{unc,i}$ = Uncontrolled emissions estimate from control device malfunction or bypass for pollutant "i" (kg/event)
$E_{cont,i}$ = Controlled emission rate of pollutant "i" from measurement data or site-specific emission test data (kg/hr)
$EM_{cont,i}$ = Controlled emission multiplier for pollutant "i" based on the source on control device from Table 12-1
t = Duration of the event (hr/event).

Table 12-1. Control Device Efficiency and Multiplier Factors for Control Device Malfunctions

Source/Control Device Description[a]	Pollutant Class[b]	Control Device Efficiency[c] (%)	Controlled Emission Multiplier[d]
FCCU or FCU/wet scrubber	PM, metal HAP	92	12.5
	SO_2	95	20
FCCU or FCU/ESP	PM, Metal HAP	92	12.5
	SO_2, NO_X, VOC, organic HAP, CO	0	1
FCCU or FCU/cyclone	PM, Metal HAP	85	6.7
FCCU or FCU/CO boiler	CO, VOC, most organic HAP	98%	50
	NO_X, PAH, Formaldehyde	-100%	0.5
FCCU or FCU/SCR	NO_X	92	12.5
FCCU or FCU/SNCR	NO_X	60%	1.7

(continued)

Table 12-1. Control Device Efficiency and Multiplier Factors for Control Device Malfunctions (continued)

Source/Control Device Description[a]	Pollutant Class[b]	Control Device Efficiency[c] (%)	Controlled Emission Multiplier[d]
Sulfur plant malfunction with sour gas sent to flare	SO_2	96 – 99.8%	25 - 500
	H_2S	0 – 98%	1– 50
Tail gas treatment malfunction with tail gas sent to flare	SO_2	95%	20
	H_2S	0 – 95%	1 – 20

[a] Abbreviations:
FCCU = fluid catalytic cracking unit
FCU = fluid coking unit
ESP = electrostatic precipitator
CO boiler = carbon monoxide boiler
SCR = selective catalytic reduction
SNCR = selective non-catalytic reduction

[b] Pollutant class. Only pollutants affected by the control device are listed. For other pollutants, assume the control device efficiency is 0% and the controlled emission multiplier is 1.

[c] Control device efficiency. A negative number indicates a control device that may increase the emissions of a particular pollutant.

[d] Controlled emission multiplier. Factor used to escalate the controlled emission factor to account for periods of control device malfunction = 1/(1-control device efficiency).

12.2 Vessel Overpressurization

Process malfunctions often result in temperature or pressure excursions that must be released from the vessel to prevent a catastrophic failure. Generally, these emergency releases will be sent to a flare. Depending on the methodology used to estimate the emissions from the flare, these gas flows may be included in the flare emission estimates (e.g., when measuring flare gas volumes and composition). If the flare emission methodology does not account for these flows (e.g., default factors) or if the flow rate during the event exceeds the range of the flow meter installed on the flare gas line, then the methods provided in this section should be used.

For discharges through a pressure relief valve or similar discharge of a compressible fluid, the flow velocity through the valve, pipe, or other restriction is limited to the speed of sound or Mach 1. Discharges that are limited by the speed of sound are termed “choked” or “sonic,” and discharges that are less than Mach 1 are termed “unchoked” or “subsonic.” For a pressure relief valve, the outlet pressure is typically known, being either atmospheric pressure (14.7 psia) or atmospheric pressure plus the back-pressure of the flare system or other control device. To determine if the flow is choked, first use Equation 12-2 to determine the critical vessel pressure for sonic flow conditions.

$$P_{vessel}° = P_{out}\left(\frac{k+1}{2}\right)^{k/(k-1)} \qquad \text{(Eq. 12-2)}$$

where:

$P_{vessel}°$ = Critical vessel pressure for sonic flow conditions (atm)
P_{out} = Outlet pressure of vent or discharge piping (atm)
k = Ratio of the specific heat at constant pressure to the specific heat at constant volume, C_p/C_v (dimensionless); see **Table 12-2** for values of k for different gases.

Table 12-2. Values of k for Various Gases[a]

Compound	k	Compound	k
Methane	1.30	Air	1.40
Natural gas (methane/ethane)	1.27	Hydrogen	1.40
Ethane	1.22	Nitrogen	1.40
Ethylene	1.20	Oxygen	1.40
Propane	1.14	Carbon monoxide	1.40
n-Butane or Iso-butane	1.11	Carbon dioxide	1.28
Pentane	1.09	Hydrogen sulfide	1.32
Hexane or Cyclohexane	1.08	Sulfur dioxide	1.26
Benzene	1.10		

[a] $k = C_p/C_v$ = ratio of the specific heat at constant pressure to the specific heat at constant volume

If the actual vessel pressure is less than the critical vessel pressure, $P_{vessel}°$, calculated from Equation 12-2, then the flow will be subsonic (unchoked). For subsonic flow, first calculate the Mach number of the discharge flow using Equation 12-3.

$$\mathrm{M} = \sqrt{\left(\frac{2}{k-1}\right) \times \left[\left(\frac{P_{vessel}}{P_{out}}\right)^{\left(\frac{k-1}{k}\right)} - 1\right]} \qquad \text{(Eq. 12-3)}$$

where:

M = Mach number of the discharge flow
P_{out} = Pressure at the discharge outlet, typically atmospheric (atm).

The mass emissions rate is then calculated using Equation 12-4.

$$E_i = C_i \times A \times \left(6.8087 \times 10^4 P_{vessel}\right) \times \sqrt{\frac{k \times MWt}{R \times T_{vessel}}} \times \frac{\mathrm{M}}{\left(1 + \frac{\mathrm{M}^2 (k-1)}{2}\right)^{\frac{k+1}{2(k-1)}}} \qquad \text{(Eq. 12-4)}$$

where:

E_i = Emission rate of pollutant "i" (lb/sec)
C_i = Concentration of pollutant "i" in the discharged gas (weight fraction)
6.8087×10^4 = Conversion factor (lb/(ft sec^2) per atm)
A = Cross-sectional area of the vent outlet (ft^2)
MWt = Molecular weight of gas discharged (lb/lb-mol)
R = Ideal gas law constant = 4.968×10^4 (lb ft^2)/(sec^2 °R lb-mol)
T_{vessel} = Temperature of gas in vessel (°R).

If the vessel pressure is greater than $P_{vessel}°$, then the flow will be choked (i.e., limited to sonic flow). Therefore, M is set to 1, and Equation 12-4 can be used (with M=1) to calculate the mass emission rate during the discharge.

If the releases are discharged to a flare or other control device (and these discharges are not otherwise measured), the calculated mass release rates determined using Equation 12-4 must then be adjusted by the control efficiency to estimate the emissions during the emergency release event.

Equation 12-4 is expressed as an instantaneous emission rate. If the vessel pressure and temperature remain fairly constant (less than 5% change) during the event, the instantaneous rate can be multiplied by the duration of the release to determine the total emissions for the event. If the vessel pressure and temperature vary, Equation 12-4 should be estimated for discrete time intervals and the emissions for each time interval determined and summed to calculate the total emissions during the event.

Example 12-1: Calculation for Emissions for Vessel Overpressurization

Given: A hydrocracking unit has a 4 inch diameter pressure relief valve set to open at 2,000 psig. The gas phase is 50 vol% H_2 and 50 vol% light (C2 through C4) hydrocarbons. If the pressure relief valve opened for 30 minutes, what are the VOC emissions from the unit during the event? Assume the vessel discharges to a flare with an average back pressure of 10 psig. The average temperature and pressure of the vessel during the event were 400 °C and 2,050 psig, respectively.

Solution: P_{out} = 10+14.7 = 24.7 psia. On a mass basis, most of the flow will be the hydrocarbons. Therefore, the k value for propane of 1.14 is selected from **Table 2-2** as representative of the gas stream. To determine if the flow is choked, first use Equation 12-2 to determine the critical vessel pressure for sonic flow conditions.

$$P_{vessel}° = P_{out}\left(\frac{k+1}{2}\right)^{k/(k-1)} = 24.7\left(\frac{1.14+1}{2}\right)^{1.14/(0.14)} = 42.9 \text{ psia}$$

The pressure of the vessel is far greater than this, so the flow is choked. Equation 2-4 is used to calculate the discharge rate by setting the Mach number is set to 1. Equation 2-4 requires the following variables in specific units.

- MWt: Using propane's molecular weight of 44 lb/lb-mol for the hydrocarbon portion, the average molecular weight of the discharge gas is: 0.5×2 + 0.5×44 = 23 lb/lb-mol.
- C_i: Using propane as the surrogate for the VOC, the weight fration of VOC is 0.5×44/23 = 0.9565 weight fraction VOC.
- A: Valve diameter = 4"/12 = 0.3333 ft. Area = $(\pi/4)\times(0.3333)^2$ = 0.08725 ft^2
- P_{vessel}: (2050+14.7)/14.7 = 140.5 atm
- T_{vessel}: (400 + 273.15)×1.8 = 1,212 °R

Plugging these values into Equation 2-4 yields:

$$E_i = 0.9565\times 0.08725\times\left(6.8087\times 10^4\times 140.5\right)\times\sqrt{\frac{1.14\times 23}{4.968\times 10^4\times 1{,}212}}\times\frac{1}{\left(1+\frac{0.14}{2}\right)^{\frac{2.14}{2(0.14)}}}$$

$$E_i = 798{,}400\times\sqrt{4.355\times 10^{-7}}\times 0.5962 = 314 \text{ lb/sec}$$

The event occurred for 1,800 sec (30 min ×60 sec/min), so the total release was 565,200 lb or 283 tons. With a flare efficiency of 98%, the emissions to the atmosphere related to this event was 5.66 tons VOC [283 × (1-0.98)].

12.3 Spills

Generally, it can be assumed that 100% of the compounds spilled are emitted into the atmosphere. For heavier liquids, the mass transfer correlations for an oil layer (K_{oil}) as provided in Appendix B, *Wastewater Treatment System Equations*, Section B.2.1, *Oil Water Separators*, can be used. Equation 12-5 can be used to estimate the emissions based on the quantity of material spilled, the area of the spill, and the time period from when the initial spill occurred to the final clean up:

$$E_i = \rho V C_{i,o}\left(1 - e^{-K_{oil} At / V}\right) \qquad \text{(Eq. 12-5)}$$

where:

E_i = Emission estimate of pollutant "i" (kg/spill event)
ρ = Density of spilled liquid (kg/m^3)
V = Volume of spilled material (m^3)
$C_{i,o}$ = Concentration of pollutant "i" in spilled fluid prior to the spill event (mass fraction; kg/kg)
K_{oil} = Mass transfer coefficient for an oil (organic) liquid (m/sec)
t = Duration of the spill (sec)
A = Area covered by the spill (m^2).

13. References

API (American Petroleum Institute). 2002. *Refinery Stream Speciation*. API Publication No. 4723. November 1.

API (American Petroleum Institute). 2009. *Compendium of Greenhouse Gas Emissions Methodologies for the Oil and Natural Gas Industry*. August 2009. Available at: http://www.api.org/ehs/climate/new/upload/2009_GHG_COMPENDIUM.pdf.

API (American Petroleum Institute) and NPRA (National Petrochemical and Refiners Association). 2010. *Review of the Emission Estimation Protocol for Petroleum Refineries.* Letter to Ms. Brenda Shine, U.S. EPA. March 31.

Bertrand R. R., and J.H. Siegell. 2002. Emission of trace compounds from catalytic cracking regenerators, Environmental Progress, 21(3)163-167. October.

Bertrand R. R., and J.H. Siegell. 2003. Emission of trace compounds from catalytic reforming units, Environmental Progress, 22(1)74-77. April.

Coburn, J. 2013. Memorandum from J. Coburn, RTI, to Brenda Shine, EPA/OAQPS/SPPD. *Impacts Estimates for Delayed Cokin Units.* September 12

Coburn, J. and M. Icenhour. 2008. Memorandum from J. Coburn and M. Icenhour, RTI, to Brenda Shine, EPA/SPPD. *Preliminary Analysis of Short-term Variability in Storage Vessels Emissions*. December 29.

EIA (U.S. Energy Information Administration). 2009. *Refinery Capacity Report 2009*. Prepared by the Energy Information Administration, Washington, DC. June 25.

EIIP (Emission Inventory Improvement Program). 2007. *Methods for Estimating Air Emissions from Chemical Manufacturing Facilities*. Volume 2, Chapter 16. Prepared by Mitchell Scientific, Inc. and RTI International. August.

EMEP/CORINAIR (European Monitoring and Evaluation Programme/COoRdination of Information on AIR emissions). 2006. *Atmospheric Emission Inventory Guidebook 2006*. Technical Report No. 11/2006. Available at: http://www.eea.europa.eu/publications/EMEPCORINAIR4.

ERG (Eastern Research Group, Inc). 2001. *Emission Inventory Improvement Program Technical Report Series*. Volume II, Chapter 2: "Preferred and Alternative Methods for Estimating Air Emissions from Boilers." Prepared for Point Sources Committee Emission Inventory Improvement Program. January.

Hansell, D., and G. England. 1998. *Air Toxic Emission Factors for Combustion Sources Using Petroleum Based Fuels, Volumes 1 and 2*. API Publication 348. Prepared by EER for S. Folwarkow, Western States Petroleum Association, Concord, CA, and K. Ritter, American Petroleum Institute, Washington, DC.

Levelton Consultants Ltd. 2005. *Emission Monitoring and Reporting Strategy – Summary and Background*. Prepared for Canadian Council of Ministers of the Environment and NFPRER Monitoring and Reporting Team.

Lev-On, M., Epperson, D., Siegell, J., and Ritter, K. (2007). Derivation of new emission factors for quantification of mass emissions when using optical gas imaging for detecting leaks. *J Air Waste Manag Assoc* 57(9):1061-1070

Lucas, B. 2007. Memorandum from B. Lucas, EPA/SPPD, to Project Docket File (EPA Docket No. EPA-HQ-OAR-2003-0146). *Storage Vessels: Control Options and Impact Estimates*. August 3, 2007. Docket Item No. EPA-HQ-OAR-2003-0146-0014.

NYSERDA (New York State Energy Research and Development Authority). 2005. Hydrogen Fact Sheet. Hydrogen Production–Steam Methane Reforming (SMR). Available at: http://www.getenergysmart.org/Files/HydrogenEducation/6HydrogenProductionSteamMethaneReforming.pdf.

Potter, T., and K. Simmons. 1998. *Composition of Petroleum Mixtures, Volume 2*. Total Petroleum Hydrocarbon Criteria Working Group Series. University of Massachusetts. Amherst, Massachusetts.

RTI (Research Triangle Institute). 2002. *Petroleum Refinery Source Characterization and Emission Model for Residual Risk Assessment*. Prepared for U.S. Environmental Protection Agency, Office of Air Quality Planning and Standards, Research Triangle Park, NC. EPA Contract No. 68-D6-0014. July.

Sander, R. 1999. *Compilationof Henry's Law Constants for Inorganic and Organic Species of Potential Importand in Environmental Chemistry*. Version 3. Max-Planck Institute of Chemistry, Mainz, Germany. April 8.

SCAQMD (South Coast Air Quality Management District). 2004a. *Source Test Report 03-194 Conducted at Chevron/Texaco Refinery, El Segundo, California—Volatile Organic Compound (VOC), Carbon Monoxide (CO), and Particulate Matter (PM) Emissions from a Coke Drum Steam Vent*. May 14.

SCAQMD (South Coast Air Quality Management District). 2004b. *Source Test Report 03-197 Conducted at Conoco-Phillips Refinery, Carson, California—Volatile Organic Compound (VOC), Carbon Monoxide (CO), and Particulate Matter (PM) Emissions From a Coke Drum Steam Vent*. July 23.

SCAQMD (South Coast Air Quality Management District). 2004c. Source Test Report 03-198 Conducted at Exxon Mobil Refinery, Torrance, California—Volatile Organic Compound (VOC), Carbon Monoxide (CO), and Particulate Matter (PM) Emissions From a Coke Drum Steam Vent. March 4.

SCAQMD (South Coast Air Quality Management District). 2004d. *Source Test Report 03-200 Conducted at Shell Oil Refinery, Wilmington, California—Volatile Organic Compound (VOC), Carbon Monoxide (CO), and Particulate Matter (PM) Emissions From a Coke Drum Steam Vent*. July 1.

TCEQ (Texas Commission on Environmental Quality). 2000. Air Permit Technical Guidance for Chemical Sources: Loading Operations.

TCEQ (Texas Commission on Environmental Quality). 2003. Source Sampling Procedures Manual, Appendix P, Cooling Tower Monitoring, Air Stripping Method (Modified El Paso Method) for Determination of Volatile Organic Compound Emissions from Water Sources. January 31.

TCEQ (Texas Commission on Environmental Quality). Air Quality Division. 2009. *2008 Emissions Inventory Guidelines*. RG-360A/08. January.

The United States – Mexico Foundation for Science. 2008. *A Customized Approach for Quantifying Emissions for the Electric Power Generation Sector in Mexico*. Prepared for: SEMARNAT and CFE. Revision 2, Revised by RTI International for U.S. Environmental Protection Agency Clean Air Markets Division and Climate Change Division. December.

Tumbore, DC. 1998. The magnitude and source of air emissions from asphalt blowing operations. *Environmental Progress 17*(1):53–59.

U.S. EPA (Environmental Protection Agency). 1995a. *Compilation of Air Pollutant Emission Factors. Volume 1: Stationary Point and Area Sources*. AP-42, Fifth Edition. Office of Air Quality Planning and Standards, Research Triangle Park, NC.

U.S. EPA (Environmental Protection Agency). 1995b. *Protocol for Equipment Leak Emission Estimates*. EPA-453/R-95-017. Office of Air Quality Planning and Standards, Research Triangle Park, NC.

U.S. EPA (Environmental Protection Agency). 1996. *Method 8260B, Volatile Organic Compounds by Gas Chromatography/Mass Spectrometry*. Revision 2, December. SW-846.

U.S. EPA (Environmental Protection Agency). 1998a. *Locating and Estimating Air Emissions from Sources of Benzene*. EPA-454/R-98-011. Office of Air Quality Planning and Standards, Research Triangle Park, NC.

U.S. EPA (Environmental Protection Agency). 1998b. *Petroleum Refineries—Background Information for Proposed Standards, Catalytic Cracking (Fluid and Other) Units, Catalytic Reforming Units, and Sulfur Recovery Units*. EPA-453/R-98-003. Washington, DC: Government Printing Office.

U.S. EPA (Environmental Protection Agency). 1998c. *Study of Hazardous Air Pollutant Emissions from Electric Utility Steam Generating Boilers—Final Report to Congress. Volume 1*. EPA-453/R-98-004a. Office of Air Quality Planning and Standards, Research Triangle Park, NC.

U.S. EPA (Environmental Protection Agency). 2006. *TANKS Emissions Estimation Software, Version 4.09D*. Office of Air Quality Planning and Standards, Technology Transfer Network, Clearinghouse for Inventories and Emissions Factors, Available at http://www.epa.gov/ttn/chief/software/tanks/index.html.

U.S. EPA (Environmental Protection Agency). 2009. *Mandatory Reporting of Greenhouse Gases* (Final Rule). *Federal Register*: 74 FR 56260. October 30.

URS Corporation. 2008. *Source Test Report of the Coker Steam Vent*. Prepared for Hovensa, LLC, St. Croix, U.S. Virgin Islands. September 8.

Yerushalmi, L., and S.R. Guiot. 1998. Kinetics of biodegradation of gasoline and its hydrocarbon constituents. *Appl Microbiol Biotechnol 49*:475−481.

[This page intentionally left blank.]

Appendix A

Average Stream Compositions

[This page intentionally left blank.]

Table A-1. Refinery Average Stream Hazardous Air Pollutant Compositions—Default Values

	Average Weight Percent of Compound in Process Unit Stream[a]											
	1,3-Butadiene 106-99-0	**n-Hexane** 110-54-3	**2,2,4-Trimethyl pentane** 540-84-1	**Benzene** 71-43-2	**Toluene** 108-88-3	**Xylenes (total)** 1330-20-7	**Ethylbenzene** 100-41-4	**Cumene** 98-82-8	**1,2,4-trimethyl benzene**[b] 95-63-6	**Naphthalene** 91-20-3	**Biphenyl** 92-52-4	**Styrene** 100-42-5
Process Units												
Atmospheric Distillation	0.01	4.28	0.05	0.86	1.7	1.97	0.63	0.12	0.63	0.25	0.06	0.001
Vacuum Distillation	-	0.007	0.004	0.004	0.043	0.020	0.024	0.001	0.020	0.12	0.09	-
Coking Unit	0.04	2.49	0.75	0.42	1.30	1.76	0.70	0.12	0.70	0.28	0.001	0.19
Cat Hydrocracker	0.03	1.86	1.04	1.27	2.72	2.67	1.02	0.09	1.33	0.20	0.001	0.19
FCCU	0.01	0.99	0.29	1.03	3.28	4.90	1.07	0.10	1.92	0.72	0.43	0.14
CRU	0.009	2.75	0.25	6.34	17.44	17.61	3.88	0.42	5.93	0.87	0.001	0.11
Hydrodesulfurization	-	1.89	0.0001	0.37	1.72	1.94	0.37	0.07	0.40	0.25	0.22	-
Alkylation	0.22	1.57	25.24	0.03	2.05	0.08	5.0E-5	5.0E-5	5.0E-5	5.0E-5	5.0E-5	0.02
Isomerization	-	3.22	0.01	0.51	0.64	0.15	-	-	-	-	-	-
Polymerization	-	0.54	0.73	1.24		1.76	1.18	0.09	-	-	-	-
Products												
Aromatics Extract - Benzene	-	-	-	99.99	0.009	0.002	-	-	-	-	-	-
Aromatics Extract - Toluene	-	-	-	0.296	95.61	3.49	2.82	-	0.3	-	-	-
Aromatics Extract - Xylenes	-	-	-	-	-	77.89	16.08	0.59	-	-	-	-
Aromatics Extract - Heavy Aromatics	-	-	-	5.7	19.36	25.03	3.56	0.965	4.94	0.314	-	-
Commercial Jet Fuel	-	1.68	0.0006	0.577	0.965	1.22	0.257	0.106	0.815	0.627	0.409	-
Conventional Gasoline	0.0009	2.22	2.94	1.4[c]	7.75	6.56	1.490	0.219	3.002	0.415	-	0.0767
Aviation Gasoline	-	2.30	-	1.01	7.69	3.37	1.2	0.103	0.5	0.695	-	-
Reformulated Gasoline	-	1.36	1.10	0.8[b]	7	7.31	1.26	0.19	2.52	0.21	-	-
Diesel Fuel	-	0.030	0.007	0.004	0.081	0.241	0.053	0.056	0.349	0.285	0.117	-
Home Heating Oil	-	-	-	-	0.108	0.300	0.095	-	0.429	0.453	0.181	-
Solvent-refined Lubes	-	-	-	-	-	-	-	-	-	-	-	-
Crude Oil	9.81E-05	1.341	0.185	0.312	0.542	0.811	0.186	0.108	0.377	0.139	0.030	

[a] Based on Petroleum Environmental Research Forum (PERF) refinery process stream speciation study (API, 2002), unless otherwise specified.
[b] 1,2,4-Trimethylbenzene is not a HAP, but it is a prevalent VOC in many refinery streams.
[c] Average benzene content of conventional and reformulated gasoline based on *Fuel Trends Resport: Gasoline 1995-2005* (U.S. EPA. Report No. EPA420-R-08-002. January 2008), corrected to weight percent using the density correction factor of 0.876/0.739 (i.e., 1.16vol%×0.876/0.739 = 1.4wt%; 0.67vol%×0.876/0.739 = 0.8wt%).

Property Calculations

If the weight composition of a commodity is available but other property data are not, estimates can be made. For example, if the liquid component mixture and the weight fraction for gasoline are known, then the vapor pressure of the liquid, the MW of vapor, and the weight fraction of the vapor can be estimated. The following steps and equations may be used for calculating these estimates:

1. From the weight fraction values in the gasoline (liquid), Equation A-1 should be used to estimate the number of moles of component "i."

$$n_i = \frac{Wtfrac_i}{MW_i} \qquad \text{(Eq. A-1)}$$

2. From moles of component "i" (liquid), Equation A-2 should be used to estimate the mole fraction of component "i" (liquid).

$$x_i = \frac{n_i}{n_T} \qquad \text{(Eq. A-2)}$$

3. Equation A-3 should be used to calculate the partial pressure of each component "i" in liquid.

$$P(i) = P \times x_i \qquad \text{(Eq. A-3)}$$

where:

P(i) = Partial pressure of component "i" (psia)
P = Vapor pressure of pure component "i" at the liquid temperature (psia)
x_i = Liquid mole fraction

4. To estimate the total pressure of the liquid, Equation A-4 should be used to estimate the average vapor pressure for the gasoline mixture by summing the partial pressure of each component "i" (liquid).

$$P_{totalVP} = \sum_{1}^{n} P_i \qquad \text{(Eq. A-4)}$$

5. From mole fraction of component "i" (liquid), Equation A-5 should be used to estimate the mole fraction of component "i" in the vapor using Raoult's law.

$$y_i = \frac{P_i}{P_{totalVP}} \qquad \text{(Eq. A-5)}$$

6. Equation A-6 should be used to estimate the MW of the gasoline vapor, MW_{VAP}, using the mole fraction of vapor (yi) and the MW of the pure component "i"(MW_i).

$$MW_{Vap} = \sum_{1}^{n} y_i \times MW_i \qquad \text{(Eq. A-6)}$$

where:

MW_{VAP} = Molecular weight of the vapor (lb/mol)
MW_i = Molecular weight of component "i" (lb/mol)

7. Equation A-7 should be used to estimate the gasoline vapor weight fractions using the gasoline vapor mole fractions and the MW_{VAP}.

$$Wtfrac_{vap} = \frac{y_i \times MW_i}{MW_{Vap}} \qquad \text{(Eq. A-7)}$$

Example A-1: Calculation of Vapor Pressure and Molecular Weight for Reformulated Gasoline Loading Example

Calculate the vapor pressure of gasoline and MW_{VAP} for submerged loading of reformulated gasoline into dedicated-service gasoline transport tank trucks (each with a volume of 8,000 gallons) based on the following information:

The refinery loads 100 tank trucks per year at a bulk temperature of 77°F. Property data are available for liquid composition of the gasoline only and are provided in **Table A-2**.

First, the vapor pressure for each constituent is determined at the loading temperature using Antoine's equation and Antoine's coefficients, such as those provided in Table 7.1-5 of AP-42 (U.S. EPA, 1995a).

Using Steps 1 through 7 from this Appendix A, the gasoline liquid mole fraction can be calculated from the weight fraction or weight percent component composition, the partial pressure of each component in liquid, and the gasoline vapor mole fraction using Raoult's law (see each calculation "step" in the columns in **Table A-2**).

- Step 1. $n_i = \frac{Wtfrac_i}{MW_i}$
- Step 2. $x_i = \frac{n_i}{n_T}$
- Step 3. $P(i) = P \times x_i$
- Step 4. $P_{totalVP} = \sum_1^n P_i$
- Step 5. $y_i = \frac{P_i}{P_{totalVP}}$
- Step 6. $MW_{Vap} = \sum_1^n y_i \times MW_i$
- Step 7. $wtfrac_{vap} = \frac{y_i \times MW_i}{MW_{Vap}}$

See **Table A-2** for the calculations of thee variables. At 77°F, the total system vapor pressure is 4.77 psia and the MW of the vapor, $MW_{GasolineVAP}$, is 67.4 lb/lb-mol.

Table A-2. Sample Calculation of Average Molecular Weight and Vapor Weight Fraction[a]

				Step 1	Step 2	Step 3	Step 4	Step 5	Step 6	Step 7
		A	B	C	D=C/A	E=D/(ΣD)	F=E*B	G=F/(ΣF)	H=G*A	G=H/(ΣH)* 100%
CAS Number	Compound	MolWt	Pvap at 77°F (psia)	Gasoline Liquid (wt%)	Gasoline Liquid (moles/100 g)	Gasoline Liquid (mole fraction)	Gasoline Partial Pressure (psia)	Gasoline Vapor (mole fraction)	MolWt Contribution Gasoline Vapor (g/mol)	Gasoline Vapor (wt%)
71-43-2	Benzene	78.11	1.840	0.80	1.02E-04	9.36E-03	1.72E-02	3.61E-03	2.82E-01	0.42
110-54-3	Hexane	86.18	2.928	1.36	1.58E-04	1.44E-02	4.22E-02	8.85E-03	7.63E-01	1.13
108-88-3	Toluene	92.14	0.550	7.0	7.60E-04	6.94E-02	3.82E-02	8.01E-03	7.38E-01	1.09
1330-20-7	Xylene	106.14	0.169	7.31	6.89E-04	6.30E-02	1.07E-02	2.23E-03	2.37E-01	0.35
100-41-4	Ethylbenzene	106.17	0.184	1.26	1.19E-04	1.08E-02	1.99E-03	4.18E-04	4.44E-02	0.07
540-84-1	2,2,4-Trimethylpentane	114.23	0.954	1.098	9.61E-05	8.79E-03	8.38E-03	1.76E-03	2.01E-01	0.30
98-82-8	Cumene	120.19	0.089	0.19	1.58E-05	1.44E-03	1.28E-04	2.68E-05	3.23E-03	0.005
91-20-3	Naphthalene	128.17	0.005	0.21	1.64E-05	1.50E-03	7.63E-06	1.60E-06	2.05E-04	0.0003
106-97-8	n-Butane	58.12	35.220	4.7	8.09E-04	7.39E-02	2.60E+00	5.46E-01	3.17E+01	46.99
72-28-5	Isobutane	58.12	13.294	1.7	2.92E-04	2.67E-02	3.55E-01	7.45E-02	4.33E+00	6.42
109-66-0	Pentane	72.15	10.285	3.9	5.41E-04	4.94E-02	5.08E-01	1.07E-01	7.69E+00	11.39
78-78-4	Isopentane	72.15	3.670	7.9	1.09E-03	1.00E-01	3.67E-01	7.70E-02	5.56E+00	8.23
	C6 surrogate	86.18	4.094	10.08	1.17E-03	1.07E-01	4.38E-01	9.18E-02	7.91E+00	11.72
	C7 surrogate	100.2	1.274	7.21	7.20E-04	6.58E-02	8.38E-02	1.76E-02	1.76E+00	2.61
	C8 surrogate	114.23	0.522	3.21	2.81E-04	2.57E-02	1.34E-02	2.81E-03	3.21E-01	0.48
	C9 surrogate	120.19	0.039	7.29	6.07E-04	5.54E-02	2.18E-03	4.57E-04	5.49E-02	0.08
	Other VOC	100.20	0.884	34.78	3.47E-03	3.17E-01	2.80E-01	5.88E-02	5.89E+00	8.73
					n_T		$P_{totalVP}$		MW_{vap}	
	Total			100	0.0109	1.00	4.77	1.00	67.49	100

[a] Weight percents for HAP based on composition provided in Table A-1; weight percent VOC from n-butane to C9 surrogate are based on *Composition of Petroleum Mixtures*, Volume 2 of the Total Hydrocabon Criteria Working Group Series. Prepared by T.L. Potter and K.E. Simmons. May 1998. ISBN 1-844-940-19-6; n-Heptane was used as the surrogate for the remaining uncharacterized fraction of the liquid gasoline ("other VOC"). Facilities should use facility-specific data for light VOC (C4 to C6 compounds) concentrations because these significantly impact the calculated vapor-phase composition.

Appendix B

Wastewater Treatment System Equations

[This page intentionally left blank.]

B. Wastewater Treatment System Equations

This appendix provides a brief presentation of the key equations needed to calculate air emissions from typical wastewater treatment units. The purpose of this appendix is to document the equations used in the simplified refinery wastewater emission tool and to correct errors found in the presentation of some of these equations as provided in Chapter 4.3 of AP-42 (EPA, 1995).

B.1 Mass Transfer Rate Equations

The overall mass transfer coefficient that determines the rate of volatilization is determined based on a two-resistance module: a liquid phase mass transfer resistance and a gas phase mass transfer resistance. The liquid and gas phase mass transfer resistances are very different for turbulent surfaces compared to quiescent (laminar flow) surfaces. Therefore, the overall mass transfer coefficient is a composite of the overall mass transfer coefficient for the turbulent surface area and the overall mass transfer coefficient for the quiescent surface area based on an area weighted average as follows:

$$K_{OL} = \frac{K_{OL,t} \times A_t + K_{OL,q} \times A_q}{A} \qquad \text{(Eq. B-1)}$$

where:

K_{OL} = Overall mass transfer coefficient (m/s)
$K_{OL,t}$ = Overall mass transfer coefficient for turbulent surface areas (m/s)
A_t = Turbulent surface area = f_{aer} A, m^2
f_{aer} = Fraction of total surface area affected by aeration
$K_{OL,q}$ = Overall mass transfer coefficient for quiescent surface areas (m/s)
A_q = Quiescent surface area = $(1-f_{aer})$ A, m^2 (Note: $A_t + A_q$ must equal A)
A = Total surface area (m^2)

The overall mass transfer coefficient for turbulent surface areas based on the two resistance module is:

$$K_{OL,t} = \left(\frac{1}{k_{l,t}} + \frac{1}{H' \times k_{g,t}} \right)^{-1} \qquad \text{(Eq. B-2)}$$

where:

$k_{l,t}$ = liquid phase mass transfer coefficient for turbulent surface areas (m/s)
H' = dimensionless Henry's law constant = H/RT_H
H = Henry's law constant (atm-m^3/mol)
R = ideal gas law constant = 0.00008205 (atm-m^3/mol-K)
T_H = temperature at which Henry's law constant was evaluated = 298 K.
$k_{g,t}$ = gas phase mass transfer coefficient for turbulent surface areas (m/s)

Similarly, the overall mass transfer coefficient for quiescent surface areas is

$$K_{OL,q} = \left(\frac{1}{k_{l,q}} + \frac{1}{H' \times k_{g,q}} \right)^{-1} \qquad \text{(Eq. B-3)}$$

where:

$k_{l,q}$ = Liquid phase mass transfer coefficient for quiescent surface areas (m/s)
$k_{g,q}$ = Gas phase mass transfer coefficient for quiescent surface areas (m/s).

The mass transfer correlations used in this module to estimate the individual mass transfer coefficients are the same as those used in the WATER9 emission model developed by EPA. The documentation of these mass transfer correlations can be accessed from EPA's Web site at http://www.epa.gov/ttn/chief/software/water/index.html. Only the basic equations are provided here. For a more detailed discussion of these mass transfer correlations, the reader is referred to Chapter 5 of the *Air Emissions Models for Waste and Wastewater* report (U.S. EPA, 1994).

B.1.1 Liquid Phase Mass Transfer Coefficient for Turbulent Surfaces

The liquid phase, turbulent surface mass transfer coefficient is calculated as follows:

$$k_{l,t} = \left(\frac{8.22 \times 10^{-3} \times J \times P_{tot} \times 1.024^{(T-20)} \times O_{cf} \times MW_l}{10.76 \times A_t \times \rho_l} \right) \left(\frac{D_{i,l}}{D_{O2,l}} \right)^{0.5} \qquad \text{(Eq. B-4)}$$

where:

J = Oxygen transfer factor (lb/h/hp)
P_{tot} = Total power to the impellers (hp)
T = Water temperature in (°C)
O_{cf} = Oxygen correction factor
MW_l = Molecular weight of liquid (water) (g/mol)
ρ_l = Density of liquid (water) ($g/cm^3 = Mg/m^3$)
$D_{i,l}$ = Diffusivity in liquid (water) (cm^2/s)
$D_{O2,l}$ = Diffusivity of oxygen in liquid (water) (cm^2/s)

B.1.2 Gas Phase Mass Transfer Coefficient for Turbulent Surfaces

The gas phase, turbulent surface mass transfer coefficient is calculated as follows:

$$k_{g,t} = 1.35 \times 10^{-7} \times \mathrm{Re}_g^{\ 1.42} \times p^{0.4} \times Sc_g^{\ 0.5} \times Fr^{-0.21} \times D_{i.a} \times MW_a \times d_{imp}^{\ -1} \qquad \text{(Eq. B-5)}$$

where:

Re_g = Gas phase Reynolds number = $(d_{imp}^2\ w\ \rho_g)/\mu_g$
ρ_g = Density of gas (air) (g/cm^3)
μ_g = Viscosity of gas (air) (g/cm-s)
p = Power number = $0.85\ (550\ P_{tot}/N_{aer})\ g_{c,2} / [(62.428\rho_l)w^3\ (d_{imp}/30.48)^5]$
$g_{c,2}$ = Gravitational constant = 32.17 lb_m-ft/s^2-lb_f = 0.03283 g_c
N_{aer} = Number of aerators
w = Rotational speed (rad/s)
Sc_g = Gas phase Schmidt number = $\mu_g/(\rho_g\ D_{i,a})$
Fr = Froud number = $[w^2\ (d_{imp}/30.48)]/\ g_{c,2}$
$D_{i,a}$ = Diffusivity of constituent in air (cm^2/s)
MW_a = Molecular weight of air (g/mol)
d_{imp} = Impeller diameter (cm)
g_c = Gravitational constant = 980 cm/s^2

B.1.3 Liquid Phase Mass Transfer Coefficient for Quiescent Surfaces

The appropriate correlation to use to estimate the liquid phase mass transfer coefficient is dependent on the wind speed and the fetch-to-depth ratio of the impoundment. The fetch is the linear distance across the treatment unit, and it is calculated from the unit's surface area, assuming a circular shape. That is,

$$F = \left(\frac{4A}{\pi}\right)^{0.5} \qquad \text{(Eq. B-6)}$$

where:

F = Fetch (m)

For wind speeds less than 3.25 m/s, the following correlation is used regardless of the fetch-to-depth ratio (F/d_{liq}):

$$k_{l,q} = 2.78 \times 10^{-6} \left(\frac{D_{i,l}}{D_{ether}}\right)^{\frac{2}{3}} \qquad \text{(Eq. B-7)}$$

where:

$k_{l,q}$ = Liquid phase, quiescent surface mass transfer coefficient (m/s)
$D_{i,l}$ = Diffusivity of constituent in liquid (water) (cm^2/s)
D_{ether} = Diffusivity of ether in water = 8.5×10^{-6} cm^2/s

For windspeeds greater than or equal to 3.25 m/s, the appropriate correlation is dependent on the fetch-to-depth ratio as follows:

$$For\ \frac{F}{d_{liq}} < 14, \qquad k_{l,q} = 1.0 \times 10^{-6} + \left(a \times 10^{-4}\right)\left(U^*\right)^b\ Sc_{liq}^{\ -0.5} \qquad \text{(Eq. B-8)}$$

where:

a = Equation constant, a = 34.1 for U* > 0.3 m/s; a = 144 for U* < 0.3 m/s
U^* = Friction velocity, m/s = $0.01U\ (6.1 + 0.63U)^{0.5}$
U = Wind speed at 10 m above the liquid surface
b = Equation constant, b = 1 for U* > 0.3 m/s; b = 2.2 for U* < 0.3 m/s
Sc_{liq} = Liquid phase Schmidt number = $\mu_l/(\rho_l\ D_{i,l})$
μ_l = Viscosity of water (g/cm-s)
ρ_l = Density of water (g/cm^3)

$$For\ 14 \le \frac{F}{d_{liq}} \le 51.2, \qquad k_{l,q} = \left[2.605 \times 10^{-9}\left(\frac{F}{d_{liq}}\right) + 1.277 \times 10^{-7}\right] U^2 \left(\frac{D_{i,l}}{D_{ether}}\right)^{\frac{2}{3}} \qquad \text{(Eq. B-9)}$$

$$For\ \frac{F}{d_{liq}} > 51.2, \qquad k_{l,q} = 2.611 \times 10^{-7}\, U^2 \left(\frac{D_{i,l}}{D_{ether}}\right)^{\frac{2}{3}} \qquad \text{(Eq. B-10)}$$

B.1.4 Gas Phase Mass Transfer Coefficient for Quiescent Surfaces

The gas phase mass transfer coefficient for quiescent surface areas is estimated as follows:

$$k_{g,q} = 4.82 \times 10^{-3} \times U^{0.78} \times Sc_g^{-0.67} \times F^{-0.11} \qquad \text{(Eq. B-11)}$$

B.2 Collection Systems and Process Units

The fraction emitted (fe) values for the collection system components are based on the models described in the EPA document titled *Industrial Wastewater Volatile Organic Compound Emissions* (U.S. EPA, 1990). Briefly, the correlation between the fraction emitted (fe) and Henry's law constant were determined. The correlation equations were then used to determine the emissions for each compound and uncontrolled collection system component.

Table B-1. Model Collection System Components and fe–Henry's Law Correlation

Collection System Component	Correlation
Drains	fe=0.035*ln(HLC)+0.4079
Trenches	fe=0.005*ln(HLC)+0.0658
Manholes	fe=0.009*ln(HLC)+0.1036
Junction Boxes	fe=0.0105*ln(HLC)+0.1416
Lift Stations	fe=0.0312*ln(HLC)+0.4163
Sumps	fe=0.0004*ln(HLC)+0.007

B.2.1 Junction Boxes and Lift Stations

Junction boxes and lift stations collect and equalize wastewater prior to pumping to the wastewater treatment system. As previously mentioned, these components should be covered the vented; however, if uncovered, the following procedure can be used to estimate air emissions:

- Step 1: Calculate the liquid phase mass transfer coefficient for turbulent surfaces ($k_{l,t}$) with Equation B-4. Alternatively, a simplified version specifically for junction boxes and lift stations that is based on default values presented in AP-42 yields:

$$k_{l,t} = \left[\frac{0.184V1.024^{(T-20)} \left(D_{i,l}\right)^{0.5}}{A_t} \right] \qquad \text{(Eq. B-12)}$$

where:

V = Unit volume (m^3)

Default values:

J = 3 (lb/h/hp)
O_{cf} = 0.83
MW_l = 18 (g/mol)
ρ_l = 1 (g/m^3)
P_{tot} = 0.0264 (hp/m^3) ×V
$D_{O2,l}$ = 2.4×10^{-5} (cm^2/s)

- Step 2: Calculate the gas phase mass transfer coefficient for quiescent surfaces ($k_{g,q}$) as described in Section B.1.4, *Gas Phase Mass Transfer Coefficient for Quiescent Surfaces*.

- Step 3: Calculate the overall mass transfer coefficient (K) with the following equation:

$$K_{OL} = \frac{\left(k_{l,t} H' k_{g,q}\right)}{\left(H' k_{g,q} + k_{l,t}\right)} \qquad \text{(Eq. B-13)}$$

- Step 4: Calculate the tank effluent concentration (C_L) with the following equation:

$$C_L(g/m^3) = \frac{QC_0}{\left(K_{OL} A + Q\right)} \qquad \text{(Eq. B-14)}$$

- Step 5: Calculate the air emissions (N) with the following equation:

$$N(g/s) = K_{OL} C_L A \qquad \text{(Eq. B-15)}$$

B.2.2 Sumps

Sumps typically collect and equalize wastewater from various collection systems prior to treatment. As previously mentioned, these components should be covered the vented; however, if uncovered, the following procedure can be used to estimate air emissions:

- Step 1: Calculate the liquid phase mass transfer coefficient for quiescent surfaces ($k_{l,q}$) as described in Section B.1.3, *Liquid Phase Mass Transfer Coefficient for Quiescent Surfaces*.
- Step 2: Calculate the gas phase mass transfer coefficient for quiescent surfaces ($k_{g,q}$) as described in Section B.1.4, *Gas Phase Mass Transfer Coefficient for Quiescent Surfaces*.
- Step 3: Calculate the overall mass transfer coefficient (K) with the following equation:

$$K_{OL} = \frac{\left(k_{l,q} H' k_{g,q}\right)}{\left(H' k_{g,q} + k_{l,q}\right)} \qquad \text{(Eq. B-16)}$$

- Step 4: Calculate the tank effluent concentration (C_L) with using Equation B-14:

- Step 5: Calculate the air emissions (N) with using Equation B-15:

B.2.3 Weirs

Weirs are typically used in wastewater collection and treatment units as dams, allowing solids to settle in the quiescent areas. The liquid phase mass transfer coefficients (k_l) is determined by Equations B-17a and 17b. The gas phase mass transfer coefficients (k_g) is determined using Equation B-18. These liquid and gas phase mass transfer coefficient equations are based on the work presented by Nakasone (1987) and Pincince (1991). Air emissions (*N*) for each pollutant are calculated using equation B-20.

$$\ln(r) = 0.042 h^{0.872} q^{0.509} \qquad \text{(Eq. B-17a)}$$

$$k_l = \frac{q}{z}\left(\frac{D_{lv}}{D_{lo}}\right)^{0.66} \ln(r) \qquad \text{(Eq. B-17b)}$$

$$k_g = 0.05\left(\frac{D_{gv}}{D_{go}}\right)^{0.66} \qquad \text{(Eq. B-18)}$$

$$K_o = \left(\frac{1}{k_l} + \frac{1}{k_g K} \right)^{-1} \quad \text{(Eq. B-19)}$$

$$N\left(\frac{\text{g}}{\text{s}}\right) = 1 - \exp\left(-\frac{K_o Z}{q}\right) Q C_o \quad \text{(Eq. B-20)}$$

where:

Q = Volumetric flow rate (m^3/s)
C_o = Initial constituent concentration (g/m^3)
h = Weir height (ft)
r = oxygen deficit ratio
q = hydraulic weir loading [$m^3/(m \cdot h)$]
Z = tailwater depth (m)
k_l = liquid-phase mass transfer coefficient (m/s)
D_{lv} = diffusion coefficient for the organic in water (cm^2/s)
D_{lo} = diffusion coefficient for air in water (cm^2/s)
k_g = gas-phase mass transfer coefficient (m/s)
D_{gv} = diffusion coefficient of the organic in air (cm^2/s)
D_{go} = diffusion coefficient of the reference material in air (cm^2/s)
K_o = overall mass transfer coefficient (m/s)
K = partition coefficient (atm-m^3/mol)
N = air emissions (g/s).

B.2.4 Oil-Water Separators (API)

An oil-water separator is a treatment unit designed to separate oil and suspended solids from wastewater. As previously mentioned, these units are typically covered and vented and thus open-air emission estimations are not required. However, if the treatment units are uncovered, then the following procedure can be used to estimate air emissions.

First, calculate the gas phase mass transfer coefficient for quiescent surfaces ($k_{g,q}$) with Equation B-11. Next, calculate the overall mass transfer coefficient for oil (K_{oil}) with the following equations:

$$K_{oil} = k_{g,q} Keq_{oil} \quad \text{(Eq. B-21)}$$

where:

$$Keq_{oil} = \frac{P^* \rho_a MW_{oil}}{\rho_{oil} MW_a P_o} \quad \text{(Eq. B-22)}$$

Air emissions are determined from the following equations:

$$N(g/s) = K_{oil} C_{L,oil} A \quad \text{(Eq. B-23)}$$

where:

$$C_{L,oil}\left(g/m^3\right) = \frac{Q_{oil} Co_{oil}}{K_{oil} A + Q_{oil}} \quad \text{(Eq. B-24)}$$

If the oil layer is > 1cm, then use this equation:

$$Co_{oil} = \frac{K_{ow}Co}{\left[1 - f_{oil} + f_{oil}K_{ow}\right]} \quad \text{(Eq. B-25)}$$

If the oil layer is < 1cm, then use this equation:

$$Co_{oil} = \frac{Co}{f_{oil}} \quad \text{(Eq. B-26)}$$

$$Q_{oil} = f_{oil}Q \quad \text{(Eq. B-27)}$$

where:

P^* = Constituent vapor pressure (mm Hg)
MW_{oil} = Molecular weight of oil (g/mol)
ρ_{oil} = Density of oil (g/m^3)
P_0 = Total pressure (atm)
Q_{oil} = Volumetric flow rate of oil (m^3/s)
Co_{oil} = Initial concentration of constituent in oil phase (g/m^3)
K_{ow} = Octanol-water partition coefficient
f_{oil} = Fraction of volume that is oil

B.2.5 Dissolved Air Flotation

DAF is a wastewater treatment unit that clarifies water by removing suspended oil and solids by bubble flotation. As previously mentioned, these treatment units are typically covered and vented to control devices. However, if the treatment units are uncovered, then the following procedure can be followed to estimate air emissions.

First, the liquid phase mass transfer coefficient for quiescent surfaces ($k_{l,q}$) can be determined by the method described in Section B.1.3, *Liquid Phase Mass Transfer Coefficient for Quiescent Surfaces*. Second, the gas phase mass transfer coefficient for quiescent surface ($k_{g,q}$) can be calculated by the method described in Section B.1.4. Third, the overall mass transfer coefficient (K_{OL}) can be determined by Equation B-1. Finally, the air emissions (N) can be calculated with the following equations:

$$N(g/s) = \left(K_{OL}A + Q_a H'\right)C_L \quad \text{(Eq. B-28)}$$

where:

$$C_L(g/m^3) = \frac{QC_0}{\left(K_{OL}A + Q + Q_a H'\right)} \quad \text{(Eq. B-29)}$$

where:

Q_a = Volumetric flow rate of diffused air (m^3/s), at conditions of 1 atmosphere and bulk liquid temperature

B.2.6 Equalization Tanks (Mixed Tank with No Biodegradation)

Equalization tanks dampen variations in wastewater flow rate and pollutant load to lessen negative impacts on downstream processes. As previously mentioned, these tanks should be covered the vented; however, if these tanks are uncovered, then the following procedure can be used to estimate air emissions:

- Step 1: Calculate the liquid phase mass transfer coefficient for turbulent surfaces ($k_{l,t}$) with Equation B-4.
- Step 2: Calculate the gas phase mass transfer coefficient for turbulent surfaces ($k_{g,t}$) with Equation B-5.
- Step 3: Calculate the liquid phase mass transfer coefficient for quiescent surfaces ($k_{l,q}$) as described in Section B.1.3, *Liquid Phase Mass Transfer Coefficient for Quiescent Surfaces*.
- Step 4: Calculate the gas phase mass transfer coefficient for quiescent surfaces ($k_{g,q}$) as described in Section B.1.4, *Gas Phase Mass Transfer Coefficient for Quiescent Surfaces*.
- Step 5: Calculate the overall mass transfer coefficient for turbulent surfaces ($K_{OL,t}$) with Equation B-2.
- Step 6: Calculate the overall mass transfer coefficient for quiescent surfaces ($K_{OL,q}$) with Equation B-3.
- Step 7: Calculate the overall mass transfer coefficient (K_{OL}) with Equation B-1.
- Step 8: Calculate the tank effluent concentration (C_L) with the following equation:

$$C_L(g/m^3) = \frac{QC_0}{(K_{OL}A + Q)} \qquad \text{(Eq. B-30)}$$

- Step 9: Calculate the air emissions (N) with the following equation:

$$N(g/s) = K_{OL}C_L A \qquad \text{(Eq. B-31)}$$

B.2.7 Biological Treatment Unit (with a Known Wasting Rate)

The determination of air emissions from biological treatment units is similar to equalization tanks with the addition of a biodegradation factor. Additionally, whereas turbulent and quiescent surface areas impact air emissions for mechanically aerated systems, the air volumetric flow rate impacts diffused aeration systems. Consequently, two slightly different methods are used to estimate air emissions.

For mechanically aerated systems, follow Steps 1 through 7 of Section B.2.5 to determine the overall mass transfer coefficient (K_{OL}).

For diffused aeration systems, first calculate the average diffused air flow rate $Q_{a,avg}$ (m^3/s):

$$Q_{a,avg} = \frac{\left[\frac{Q_a P_0}{P_0 + P_g} + Q_a\right]}{2} \qquad \text{(Eq. B-32)}$$

where:

Q_a = Volumetric flow rate of diffused air (m^3/s), at conditions of 1 atmosphere and bulk liquid temperature
P_g = Blower gauge pressure (lb/in^2, gauge)
P_0 = Atmospheric pressure (atm) × 14.696 ($lb/in^2 atm$)=(lb/in^2)

Monteith *et al*. (1996) reported the effect of turbulence, induced by diffused bubble aeration, on mass transfer at the water surface. Correlations between the mass transfer of ammonia and VOCs were established and used to determine $K_{L[NH4]}a$, $k_{l,t}a$ and $k_{g,t}a$ with the following equations:

$$K_{L[NH4]}a = 0.08 + 0.012\left(\frac{3600 \times Q_{a,avg}}{A_t}\right)^{0.4} \qquad \text{(Eq. B-33)}$$

where:

$K_{L[NH4]}a$ = Ammonium volumetric mass transfer coefficient (hr^{-1})
3600 = Conversion factor (sec/hr)
A_t = Turbulent surface area (m^2)

$$k_{l,t}a = K_{L[NH4]}a \times \left(\frac{D_{i,l}}{D_{l,NH4}}\right)^{0.5} \quad \text{(Eq. B-34)}$$

where:

$D_{l,NH4}$ = Diffusivity of Ammonium in water (6.93×10^{-5} cm^2/s)
$k_{l,t}a$ = Volumetric liquid phase mass transfer coefficient (hr^{-1})

The $k_{l,t}$ values must then be calculated from the $k_{l,t}a$ value with the following equation:

$$k_{l,t} = \frac{k_{l,t}a}{3600 \times a} \quad \text{(Eq. B-35)}$$

where:

$k_{l,t}$ = Liquid phase mass transfer coefficient (m/s)
a = Specific interfacial area based on liquid volume (m^{-1}) = A/V
V = Aeration basin volume (m^3)

Hsieh *et al*. (1992) reported the ratio of k_g/k_l ranged from 2.2 to 3.6 for diffused aeration systems. Therefore, k_g can be approximated by the following equation:

$$k_{g,t} = 3k_{l,t} \quad \text{(Eq. B-36)}$$

where:

$k_{g,t}$ = Gas phase mass transfer coefficient (m/s)

The $K_{OL,t}$, $K_{OL,q}$, and K_{OL} are then calculated by using steps by using equations B-2, B-3, and B-1.

Next, calculate the tank effluent concentration (C_L) and the emission rate (N) with the following equations.

For mechanically aerated systems:

$$N(g/s) = K_{OL}C_L A \quad \text{(Eq. B-37)}$$

For diffused aeration systems:

$$N(g/s) = (K_{OL}A + Q_a H')C_L \quad \text{(Eq. B-38)}$$

where:

$$C_L(g/m^3) = \frac{\left[-b + (b^2 - 4ac)^{0.5}\right]}{2a} \quad \text{(Eq. B-39)}$$

For mechanically aerated systems:

$$a = \frac{K_{OL}A + Q_w k_{abs} C_{WAS,VSS} + Q_e}{Q_i} \quad \text{(Eq. B-40)}$$

$$b = \frac{Ks}{Q_i}\left(K_{OL}A + Q_w k_{abs} C_{WAS,VSS} + Q_e\right) + \frac{V_{\max} C_{MLVSS} V}{Q_i} - C_0 \quad \text{(Eq. B-41)}$$

For diffused aerated systems:

$$a = \frac{K_{OL}A + Q_{a,avg}H' + Q_w k_{abs} C_{WAS,VSS} + Q_e}{Q_i} \quad \text{(Eq. B-42)}$$

$$b = \frac{Ks}{Q_i}\left(K_{OL}A + Q_{a,avg}H' + Q_w k_{abs} C_{WAS,VSS} + Q_e\right) + \frac{V_{\max} C_{MLVSS} V}{Q_i} - C_0 \quad \text{(Eq. B-43)}$$

$$c = -K_S C_0 \quad \text{(Eq. B-44)}$$

where:

Q_w = Wasted activated sludge flow rate (m^3/s)
Q_e = Effluent flow rate (m^3/s)
Q_i = Influent flow rate (m^3/s)
K_S = Half saturation biorate constant (g/m^3)
V_{max} = Maximum biorate constant (g/s-g biomass)
C_{MLVSS} = Mixed-liquor volatile suspended solids (g/m^3)
$C_{WAS,VSS}$ = Wasted sludge volatile suspended solids (g/m^3)
k_{abs} = Partition coefficient for organic contaminant (m^3/g)

where:

$$k_{abs} = 1\times10^{-6} f_{OC} K_{OC} \quad \text{(Eq. B-45)}$$

f_{OC} = Weight fraction of carbon in biomass (g C/g) (default value 0.33)
K_{OC} = Organic carbon partition coefficient (g/MgC/(g/ m^{-3})
1×10^{-6} = unit conversion (megagrams per gram, Mg/g)

where:

$$\log K_{OC} = \log K_{OW} - 0.32 \quad \text{(Eq. B-46)}$$

B.2.8 Biological Treatment Unit (with an Unknown Wasting Rate)

Air emission estimate calculations from aerated lagoons are very similar to those for activated sludge units. The difference is sludge is not wasted from the lagoon, rather it settles and accumulates on the lagoon bottom until dredging. The assumptions made in this document are: (1) at steady-state conditions the amount of sludge that settles and thus removed from the unit is equal to the biomass production rate, and (2) once the sludge and associated contaminants settle, they are considered removed from the system.

Follow the procedure in Section B.2.6 to determine the overall mass transfer coefficient (K_{OL}), the unit effluent concentration (C_L), and the emission rate (N). However, variables a, b, and c are determined by the following equations

For mechanically aerated systems:

$$a = \frac{K_{OL}A + 0.67C_{BODi}Q_i k_{abs} + Q_e}{Q_i} \quad \text{(Eq. B-47)}$$

$$b = \frac{Ks}{Q_i}\left(K_{OL}A + 0.67C_{BODi}Q_i k_{abs} + Q_e\right) + \frac{V_{\max}C_{MLVSS}V}{Q_i} - C_0 \quad \text{(Eq. B-48)}$$

For diffused aerated system:

$$a = \frac{K_{OL}A + Q_{a,avg}H' + 0.67C_{BODi}Q_i k_{abs}}{Q_i} \quad \text{(Eq. B-49)}$$

$$b = \frac{Ks}{Q_i}\left(K_{OL}A + Q_{a,avg}H' + 0.67C_{BODi}Q_i k_{abs}\right) + \frac{V_{\max}C_{MLVSS}V}{Q_i} - C_0 \quad \text{(Eq. B-50)}$$

$$c = -K_S C_0 \quad \text{(Eq. B-51)}$$

B.3 References

Hsieh, C., R. Babcock, and M. Stenstrom. 1992. *Estimating semi-volatile organic compound emission rates and oxygen transfer coefficients in diffused aeration*. Presented at the 65th Water Environment Federation Conference, New Orleans, LA, September 20–24.

Monteith, H., W. Parker, and H. Melcer. 1996. *Impact of bubble-induced surface turbulence on gas-liquid mass transfer in diffused aeration systems*. Presented at the Water Environment Federation's Annual Technical Exhibition and Conference, Dallas, TX, October 5–9.

Nakasone, H. 1987. Study of aeration at weirs and cascades. *J. Environ. Eng.113*:64.

Pincince, A.B. 1991. Transfer of oxygen and emissions of volatile organic compounds at clarifier weirs. *Res. J. Water Pollut. Control Fed.*, *63*, 114-119.

U.S. EPA (Environmental Protection Agency). 1990. *Industrial Wastewater Volatile Organic Compound Emissions—Background Information for BACT/LAER Determinations*. EPA 450/3-90-004. Office of Air Quality Planning and Standards, Research Triangle Park, NC. January.

U.S. EPA (Environmental Protection Agency). 1994. *Air Emissions Models for Waste and Wastewater*. EPA-453/R-94-080A. Office of Air Quality Planning and Standards, Research Triangle Park, NC.

U.S. EPA (Environmental Protection Agency). 1995. *Compilation of Air Pollutant Emission Factors. Volume 1: Stationary Point and Area Sources*. AP-42, Fifth Edition. Office of Air Quality Planning and Standards, Research Triangle Park, NC.

[This page intentionally left blank.]

Appendix C

Primer for TANKS Model Users

[This page intentionally left blank.]

C. Primer for TANKS Model Users

In general, EPA recommends that the emission estimation procedures detailed in Chapter 7.1 of AP-42 (U.S. EPA, 1995a) be used to calculate air pollutant emissions from organic liquid storage vessels. There are many tools available, such as TANKS v4.09D emission estimation software that can be used to perform the necessary calculations detailed in Chapter 7.1 of AP-42 (U.S. EPA, 1995a). TANKS v4.09D software can be downloaded for free at http://www.epa.gov/ttn/chief/software/tanks/index.html (under the *How to Get TANKS 4.09D* link). Because TANKS v4.09D is widely used, this appendix is included to provide tips and insights on using the TANKS program. This appendix will also highlight some potential enhancements to the modeling of storage tank emissions that may be implemented when using the AP-42 equations directly (or potentially other software packages) that are not currently afforded by TANKS v4.09D.

The calculations in the TANKS program are specific to the type of tank, and the results will be highly dependent on the type of liquid stored. Each individual storage tank should be modeled separately. There may be instances in which a set of tanks have identical properties and materials and very similar throughputs so that the emissions from a single storage tank can be modeled and used as the emissions for each tank in the set. However, this type of "model tank" analysis should be used and generally be limited to situations in which limited data are available (i.e., if throughput is only measured by product and not by individual tank, then modeling a group of identical tanks used to store that product may be necessary). For inventories developed by the petroleum refinery or storage tank operators, it is recommended that individual tank data be entered into the TANKS program (or other similar software), and the emission results for individual tanks be reported in the emission inventory. For some uses of the emission inventory data, specific emission location and source characteristics data are needed. These data become lost or less accurate when emissions from a group of tanks (e.g., those that would be assigned to the same source classification code [SCC]) are aggregated when reporting to the emission inventory.

To enter a new tank, first select the tank type from the drop-down menu labeled "Create a New Tank Record." There are five basic tank types: horizontal fixed roof tanks; vertical fixed roof tanks; external floating roof tanks; internal floating roof tanks; and domed external floating roof tanks. Next, fill out the information in the Identification, Physical Characteristics, Site Selection, Tank Contents, and Monthly Calculations tabs with the appropriate information. **Tables C-1 and C-2** show the required input by tank orientation. These inputs may either be from a drop-down list based on the TANKS database for location, tank color, and other tank-specific information or taken directly from process data. In TANKS, selecting the city will set the meteorological data that will be used in the calculations. After entering all of the requested data, the tank information can be saved by pressing the Save button at the bottom of the gray window.

Table C-1. TANKS Inputs by Tank Configuration-Tank Dimensions and Characteristics

	Horizontal Tank	Vertical Fixed-Roof Tank	Internal Floating Roof	External Floating Roof	Domed External Floating Roof
Identification number	●	●	●	●	●
Description	●	●	●	●	●
State	●	●	●	●	●
City	●	●	●	●	●
Company	●	●	●	●	●
Dimensions and Characteristics					
Shell height (feet [ft])	●	●			
Diameter (shell diameter, ft)	●		●	●	
Volume			●	●	
Maximum liquid height	●	●			
Average liquid height	●	●			
Working volume (gallons)	●	●			
Turnovers per year	●	●	●	●	
Net throughput (gallons per year [gal/yr])	●	●		●	
Is tank heated?	●	●			
Is tank underground?	●				
Self-supporting roof		●			
Number of columns		●			
Effective column diameter		●			
Roof type				●	●
Roof fitting category				●	●
Tank construction				●	●

Table C-2. TANKS Inputs by Tank Configuration-Specific Attributes, Site Selection, and Contents

	Horizontal Tank	Vertical Fixed-Roof Tank	Internal Floating Roof	External Floating Roof	Domed External Floating Roof
Tank/Shell/Roof Characteristics					
(External) shell/paint color/shade	●	●	●	●	●
(External) shell/paint shell condition	●	●	●	●	●
Internal shell condition			●		
Rim Seal					
Primary seal			●	●	●
Secondary seal			●	●	●
Deck Characteristics					
Deck type			●		
Deck fitting category			●		
Breather Vent Settings					
Vacuum setting (psig)	●	●			
Pressure setting (psig)	●	●			
Roof Characteristics					
Color/shade		●	●		
Condition		●			
Type		●			
Height (ft)		●			
Roof paint condition			●		
Site Selection					
Nearest major city	●	●	●	●	●
Daily average ambient temperature	●	●	●	●	●
Annual average maximum temperature	●	●	●	●	●
Annual average minimum temperature	●	●	●	●	●
Average wind speed	●	●	●	●	●
Annual average solar insulation factor (Btu/(ft × ft ×day)	●	●	●	●	●
Atmospheric pressure (pounds of force per square inch absolute [psia])	●	●	●	●	●
Tank Contents					
Chemical category of liquid	●	●	●	●	●
Single or multi-component liquid	●	●	●	●	●
Mixture properties, if applicable	●	●	●	●	●
Throughput by month	●	●	●	●	●

For the internal floating roof tank, the external floating roof tank, and the domed external floating roof tank, it is possible to define the fitting type to represent specific characteristics of the tanks at your facility. Using facility-specific tank information will ensure that the calculated emission estimates are as accurate as possible. The fittings information can be entered under the Physical Characteristics tab by selecting the View/Add Fittings button and providing the fitting type and status. **Table C-3** contains a list of the different fitting types and status options. Using the information provided in **Tables C-1** through **C-3**, the tanks program estimates the anticipated emissions specifically for the particular location, tank type, and process characteristics.

Once a tank is entered, you can use or import that tank as a starting point for adding new tanks. To copy data from an existing tank to a new tank, select DATA, then TANKS, and then New Record from the TANKS 4.0 main menu or by selecting the appropriate acronym from the toolbar on the main screen. Click on the Copy button at the bottom of the tank pop-up screen. Then click on the tank that you want to copy from a dropdown menu, and then select whether you want to copy just the Tank Data, just the Liquid Data, or both ("All Data"). Simply opening an existing tank and changing the name does not create a new tank record, it only renames and replaces the old record.

Because TANKS uses preloaded meteorological data, year-to-year variations in emissions will only result from differing throughput or tank service (storing different material than in previous years). If accommodated in other software packages, meteorological data that are specific to the reporting year should be used because this information will provide more accurate emission values. Studies have indicated that emissions may vary by up to 25% from year to year depending on the meteorological conditions for that year (Coburn and Icenhour, 2008). Also, if accommodated in other software packages, directly measured liquid temperatures or monthly average ambient temperatures should be used for the bulk liquid temperatures, and these values should be used to calculate monthly average emission rates. In TANKS, even when using the monthly calculations option, unfortunately the annual average liquid temperature is still used. As such, unless there are extreme differences in throughputs by month, the monthly calculation procedures used in TANKS are unlikely to significantly alter the annual emission estimates. Based on limited model analyses, monthly variations in liquid temperature may be significant and may influence the annual average emissions if monthly emissions are estimated more rigorously (i.e., by accounting for variations in bulk liquid temperature) (Coburn and Icenhour, 2008).

The TANKS program typically provides total hydrocarbon emission estimates. TANKS is also designed to calculate the individual component emissions from known mixtures and to estimate emissions from typical refined petroleum products. More than 100 organic liquids are included in the TANKS chemical database, but it is also designed to analyze other substances based on their chemical properties and the parameters shown in **Table C-4**. If you store a component or mixture in the storage tanks and have available property data (i.e. chemical database inputs), then these can be added to the TANKS program.

In addition to the analysis of individual chemicals, the TANKS program also has the capability to calculate the characteristics of defined mixtures. When the "Multiple" option is selected for the "Single- or Multi-Component Liquid" option, and "Full Speciation" is selected for the "Speciation" option, then the full chemical profile can be created using the "View/Add Components" button. Any defined chemical, including those defined using the criteria in **Table C-4**, can be included in the mixture as a component as long as the percentage of total liquid weight or relative weight is known. With the chemical components and their relative percentages and/or weights entered, the menu can be closed, and the mixture properties can be calculated by clicking on the Calculate Mixture Properties button.

Table C-3. Fitting Type and Status Option Inputs for TANKS Program

Fitting Type	Status
Access hatch (24 inches in diameter)	Bolted cover, gasketed
	Unbolted cover, gasketed
	Unbolted cover, ungasketed
Automatic gauge float well	Bolted cover, gasketed
	Unbolted cover, gasketed
	Unbolted cover, ungasketed
Column well (24 inches in diameter)	Built-up column, sliding cover, gasketed
	Built-up column, sliding cover, ungasketed
	Pipe column, flexible fabric sleeve seal
	Pipe column, sliding cover, gasketed
	Pipe column, sliding cover, ungasketed
Gauge-hatch/sample well (8 inches in diameter)	Weighted mechanical actuation, gasketed
	Weighted mechanical actuation, ungasketed
Ladder well (36 inches in diameter)	Sliding cover, gasketed
	Sliding cover, ungasketed
Rim vent (6 inches In diameter)	Weighted mechanical actuation, gasketed
	Weighted mechanical actuation, ungasketed
Roof drain (3 inches in diameter)	Open
	90% closed
Roof leg (3 inches In diameter)	Adjustable, pontoon area, ungasketed
	Adjustable, center area, ungasketed
	Adjustable, double-deck roofs
	Fixed
	Adjustable, pontoon area, gasketed
	Adjustable, pontoon area, sock
	Adjustable, center area, gasketed
	Adjustable, center area, sock
Roof leg or hanger well	Adjustable
	Fixed
Sample pipe or well (24 inches In diameter)	Slotted pipe, sliding cover, gasketed
	Slotted pipe, sliding cover, ungasketed
	Slit fabric seal 10% open
Slotted guide-pole/sample well	Sliding cover, without float, ungasketed
	Sliding cover, with float, ungasketed
	Sliding cover, without float, gasketed
	Sliding cover, with float, gasketed
	Sliding cover, with pole wiper, gasketed
	Sliding cover, with pole sleeve, gasketed
	Sliding cover, with float, wiper, gasketed
	Sliding cover, with float, sleeve, wiper, gasketed
	Sliding cover, with pole sleeve, wiper, gasketed
Stub drain (1 inch in diameter)	None listed
Unslotted guide-pole well	Sliding cover, ungasketed
	Sliding cover, gasketed
	Sliding cover, with sleeve ungasketed
	Sliding cover, with sleeve, gasketed
	Sliding cover, with wiper, gasketed
Vacuum breaker (10 inches in diameter)	Weighted mechanical actuation, gasketed
	Weighted mechanical actuation, ungasketed

Table C-4. Chemical Database Inputs for TANKS

Chemical name
CAS number (Chemical Abstracts Service number)
Category
Liquid molecular weight
Liquid density (lb/gal; ~60°F)
Vapor molecular weight
Vapor pressure at 40°F, 50°F, 60°F, 70°F, 80°F, 90°F, 100°F
Constants for Antoine's equation using °C (A, B, and C)
Constants for Antoine's equation using °K (A and B)
Reid vapor pressure (psia): Distillates and crude oil
ASTM slope: distillates only

Appendix D

Emission Factors from *Air Toxic Emission Factors for Combustion Sources Using Petroleum Based Fuels – Final Report, Volume 2 – Development of Emission Factors Using CARB Approach*

[This page intentionally left blank.]

D. Emission Factors from *Air Toxic Emission Factors for Combustion Sources Using Petroleum Based Fuels – Final Report, Volume 2 – Development of Emission Factors Using CARB Approach*

- Detect Ratio: Ratio of detected values to the sum of detected and nondetected values.
- RSD: 100 times the standard deviation divided by the arithmetic average.
- Uncertainty: 100 times the 95% confidence interval divided by the arithmetic average.

Dioxin Acronyms

4D 2378	2,3,7,8-Tetrachlorodibenzo-p-dioxin.
4D Other	Tetrachlorodibenzo-p-dioxin other.
4D Total	Tetrachlorodibenzo-p-dioxin total.
5D 12378	1,2,3,7,8-Pentachlorodibenzo-p-dioxin.
5D Other	Pentachlorodibenzo-p-dioxin other.
5D Total	Pentachlorodibenzo-p-dioxin total.
6D 123478	1,2,3,4,7,8-Hexachlorodibenzo-p-dioxin.
6D 123678	1,2,3,6,7,8-Hexachlorodibenzo-p-dioxin.
6D 123789	1,2,3,7,8,9-Hexachlorodibenzo-p-dioxin.
6D Other	Hexachlorodibenzo-p-dioxin other.
6D Total	Hexachlorodibenzo-p-dioxin.
7D 1234678	1,2,3,4,7,8-Heptachlorodibenzo-p-dioxin.
7D Other	Heptachlorodibenzo-p-dioxin other.
7D Total	Heptachlorodibenzo-p-dioxin total.
8D	Octachlorodibenzo-p-dioxin.

Furan Acronyms

4F 2378	2,3,7,8-Tetrachlorodibenzofuran.
4F Other	Tetrachlorodibenzofuran other.
4F Total	Tetrachlorodibenzofuran total.
5F 12378	1,2,3,7,8-Pentachlorodibenzofuran.
5F 23478	2,3,4,7,8-Pentachlorodibenzofuran.
5F Other	Pentachlorodibenzofuran other.
5F Total	Pentachlorodibenzofuran total.
6F 123478	1,2,3,4,7,8-Hexachlorodibenzofuran.
6F 123678	1,2,3,6,7,8-Hexachlorodibenzofuran.
6F 123789	1,2,3,7,8,9-Hexachlorodibenzofuran.
6F 234678	2,3,4,6,7,8-Hexachlorodibenzofuran.
6F Other	Hexachlorodibenzofuran other.
6F Total	Hexachlorodibenzofuran total.
7F 1234678	1,2,3,4,6,7,8-Heptachlorodibenzofuran.
7F 1234789	1,2,3,4,7,8,9-Heptachlorodibenzofuran.
7F Other	Heptachlorodibenzofuran other.
7F Total	Heptachlorodibenzofuran total.
8F	Octachlorodibenzofuran.

Table D-1a. Summary of Data for Emission Factor Development – Asphalt Blowing with Blow Cycle and a Thermal Oxidizer

Substance	CARB Rating	Emission Factor (lb/MMcf)				Tests	RSD, %	Uncer-tainty, %	Detect Ratio
		Mean	Median	Maximum	Minimum				
Acetaldehyde	C3-v-	1.78E-03	1.78E-03	1.78E-03	1.78E-03	1	0.00	0.00	1.00
Arsenic	D3-v-	1.31E-02	1.31E-02	1.31E-02	1.31E-02	1	0.00	0.00	0.00
Benzene	E3-v-	3.16E-01	3.16E-01	3.16E-01	3.16E-01	1	0.00	0.00	0.00
Beryllium	D3-v-	2.63E-03	2.63E-03	2.63E-03	2.63E-03	1	0.00	0.00	0.00
Cadmium	D3-v-	5.25E-03	5.25E-03	5.25E-03	5.25E-03	1	0.00	0.00	0.00
Chromium (Hex)	C3-v-	3.17E-03	3.17E-03	3.17E-03	3.17E-03	1	0.00	0.00	1.00
Chromium (Total)	C3-v-	4.18E-02	4.18E-02	4.18E-02	4.18E-02	1	0.00	0.00	1.00
Copper	D3-v-	4.75E-02	4.75E-02	4.75E-02	4.75E-02	1	0.00	0.00	1.00
Ethylbenzene	E3-v-	8.61E-01	8.61E-01	8.61E-01	8.61E-01	1	0.00	0.00	0.00
Formaldehyde	C3-v-	3.55E-03	3.55E-03	3.55E-03	3.55E-03	1	0.00	0.00	1.00
HCl	C3-v-	2.21E-03	2.21E-03	2.21E-03	2.21E-03	1	0.00	0.00	1.00
Hydrogen Sulfide	A3-v-	2.07E+00	2.07E+00	2.07E+00	2.07E+00	1	0.00	0.00	0.00
Lead	D3-v-	5.25E-02	5.25E-02	5.25E-02	5.25E-02	1	0.00	0.00	0.00
Manganese	D3-v-	1.23E-01	1.23E-01	1.23E-01	1.23E-01	1	0.00	0.00	1.00
Mercury	A3-v-	9.07E-03	9.07E-03	9.07E-03	9.07E-03	1	0.00	0.00	1.00
Nickel	D3-v-	6.65E-02	6.65E-02	6.65E-02	6.65E-02	1	0.00	0.00	0.00
Phenol	C3-v-	7.57E-02	7.57E-02	7.57E-02	7.57E-02	1	0.00	0.00	1.00
Selenium	D3-v-	1.31E-02	1.31E-02	1.31E-02	1.31E-02	1	0.00	0.00	0.00
Xylene (Total)	E3-v-	8.61E-01	8.61E-01	8.61E-01	8.61E-01	1	0.00	0.00	0.00
Zinc	D3-v-	8.41E-01	8.41E-01	8.41E-01	8.41E-01	1	0.00	0.00	1.00

Table D-1b. Summary of Data for Emission Factor Development – Asphalt Blowing with Blow Cycle and a Thermal Oxidizer

Substance	CARB Rating	Emission Factor (lb/MMBtu)				Tests	RSD, %	Uncer-tainty, %	Detect Ratio
		Mean	Median	Maximum	Minimum				
Acetaldehyde	C3-v-	1.67E-06	1.67E-06	1.67E-06	1.67E-06	1	0.00	0.00	1.00
Arsenic	D3-v-	1.23E-05	1.23E-05	1.23E-05	1.23E-05	1	0.00	0.00	0.00
Benzene	E3-v-	2.98E-04	2.98E-04	2.98E-04	2.98E-04	1	0.00	0.00	0.00
Beryllium	D3-v-	2.47E-06	2.47E-06	2.47E-06	2.47E-06	1	0.00	0.00	0.00
Cadmium	D3-v-	4.94E-06	4.94E-06	4.94E-06	4.94E-06	1	0.00	0.00	0.00
Chromium (Hex)	C3-v-	2.99E-06	2.99E-06	2.99E-06	2.99E-06	1	0.00	0.00	1.00
Chromium (Total)	C3-v-	3.94E-05	3.94E-05	3.94E-05	3.94E-05	1	0.00	0.00	1.00
Copper	D3-v-	4.47E-05	4.47E-05	4.47E-05	4.47E-05	1	0.00	0.00	1.00
Ethylbenzene	E3-v-	8.10E-04	8.10E-04	8.10E-04	8.10E-04	1	0.00	0.00	0.00
Formaldehyde	C3-v-	3.34E-06	3.34E-06	3.34E-06	3.34E-06	1	0.00	0.00	1.00
HCl	C3-v-	2.08E-06	2.08E-06	2.08E-06	2.08E-06	1	0.00	0.00	1.00
Hydrogen Sulfide	A3-v-	1.95E-03	1.95E-03	1.95E-03	1.95E-03	1	0.00	0.00	0.00
Lead	D3-v-	4.94E-05	4.94E-05	4.94E-05	4.94E-05	1	0.00	0.00	0.00
Manganese	D3-v-	1.16E-04	1.16E-04	1.16E-04	1.16E-04	1	0.00	0.00	1.00
Mercury	A3-v-	8.53E-06	8.53E-06	8.53E-06	8.53E-06	1	0.00	0.00	1.00
Nickel	D3-v-	6.26E-05	6.26E-05	6.26E-05	6.26E-05	1	0.00	0.00	0.00
Phenol	C3-v-	7.12E-05	7.12E-05	7.12E-05	7.12E-05	1	0.00	0.00	1.00
Selenium	D3-v-	1.23E-05	1.23E-05	1.23E-05	1.23E-05	1	0.00	0.00	0.00
Xylene (Total)	E3-v-	8.10E-04	8.10E-04	8.10E-04	8.10E-04	1	0.00	0.00	0.00
Zinc	D3-v-	7.91E-04	7.91E-04	7.91E-04	7.91E-04	1	0.00	0.00	1.00

Table D-2a. Summary of Data for Emission Factor Development – Asphalt Blowing with No Blow Cycle and a Thermal Oxidizer

Substance	CARB Rating	Emission Factor (lb/MMcf)				Tests	RSD, %	Uncer-tainty, %	Detect Ratio
		Mean	Median	Maximum	Minimum				
Acetaldehyde	C3-v-	4.32E-03	4.32E-03	4.32E-03	4.32E-03	1	0.00	0.00	1.00
Arsenic	D3-v-	1.16E-02	1.16E-02	1.16E-02	1.16E-02	1	0.00	0.00	0.00
Benzene	E3-v-	2.80E-01	2.80E-01	2.80E-01	2.80E-01	1	0.00	0.00	0.00
Beryllium	D3-v-	2.33E-03	2.33E-03	2.33E-03	2.33E-03	1	0.00	0.00	0.00
Cadmium	D3-v-	4.65E-03	4.65E-03	4.65E-03	4.65E-03	1	0.00	0.00	0.00
Chromium (Hex)	C3-v-	3.28E-03	3.28E-03	3.28E-03	3.28E-03	1	0.00	0.00	0.00
Chromium (Total)	C3-v-	1.42E-02	1.42E-02	1.42E-02	1.42E-02	1	0.00	0.00	0.00
Copper	D3-v-	3.79E-02	3.79E-02	3.79E-02	3.79E-02	1	0.00	0.00	1.00
Ethylbenzene	E3-v-	7.62E-01	7.62E-01	7.62E-01	7.62E-01	1	0.00	0.00	0.00
Formaldehyde	C3-v-	1.30E-02	1.30E-02	1.30E-02	1.30E-02	1	0.00	0.00	1.00
HCl	C3-v-	8.22E-04	8.22E-04	8.22E-04	8.22E-04	1	0.00	0.00	1.00
Hydrogen Sulfide	A3-v-	1.83E+00	1.83E+00	1.83E+00	1.83E+00	1	0.00	0.00	0.00
Lead	D3-v-	4.65E-02	4.65E-02	4.65E-02	4.65E-02	1	0.00	0.00	0.00
Manganese	D3-v-	2.07E-01	2.07E-01	2.07E-01	2.07E-01	1	0.00	0.00	1.00
Mercury	A3-v-	8.53E-03	8.53E-03	8.53E-03	8.53E-03	1	0.00	0.00	1.00
Nickel	D3-v-	6.01E-02	6.01E-02	6.01E-02	6.01E-02	1	0.00	0.00	0.00
Phenol	C3-v-	4.64E-02	4.64E-02	4.64E-02	4.64E-02	1	0.00	0.00	1.00
Selenium	D3-v-	1.16E-02	1.16E-02	1.16E-02	1.16E-02	1	0.00	0.00	0.00
Xylene (Total)	E3-v-	7.62E-01	7.62E-01	7.62E-01	7.62E-01	1	0.00	0.00	0.00
Zinc	D3-v-	5.35E-01	5.35E-01	5.35E-01	5.35E-01	1	0.00	0.00	1.00

Table D-2b. Summary of Data for Emission Factor Development – Asphalt Blowing with No Blow Cycle and a Thermal Oxidizer

Substance	CARB Rating	Emission Factor (lb/MMBtu)				Tests	RSD, %	Uncer-tainty, %	Detect Ratio
		Mean	Median	Maximum	Minimum				
Acetaldehyde	C3-v-	4.07E-06	4.07E-06	4.07E-06	4.07E-06	1	0.00	0.00	1.00
Arsenic	D3-v-	1.09E-05	1.09E-05	1.09E-05	1.09E-05	1	0.00	0.00	0.00
Benzene	E3-v-	2.64E-04	2.64E-04	2.64E-04	2.64E-04	1	0.00	0.00	0.00
Beryllium	D3-v-	2.19E-06	2.19E-06	2.19E-06	2.19E-06	1	0.00	0.00	0.00
Cadmium	D3-v-	4.37E-06	4.37E-06	4.37E-06	4.37E-06	1	0.00	0.00	0.00
Chromium (Hex)	C3-v-	3.09E-06	3.09E-06	3.09E-06	3.09E-06	1	0.00	0.00	0.00
Chromium (Total)	C3-v-	1.34E-05	1.34E-05	1.34E-05	1.34E-05	1	0.00	0.00	0.00
Copper	D3-v-	3.56E-05	3.56E-05	3.56E-05	3.56E-05	1	0.00	0.00	1.00
Ethylbenzene	E3-v-	7.17E-04	7.17E-04	7.17E-04	7.17E-04	1	0.00	0.00	0.00
Formaldehyde	C3-v-	1.22E-05	1.22E-05	1.22E-05	1.22E-05	1	0.00	0.00	1.00
HCl	C3-v-	7.74E-07	7.74E-07	7.74E-07	7.74E-07	1	0.00	0.00	1.00
Hydrogen Sulfide	A3-v-	1.73E-03	1.73E-03	1.73E-03	1.73E-03	1	0.00	0.00	0.00
Lead	D3-v-	4.38E-05	4.38E-05	4.38E-05	4.38E-05	1	0.00	0.00	0.00
Manganese	D3-v-	1.95E-04	1.95E-04	1.95E-04	1.95E-04	1	0.00	0.00	1.00
Mercury	A3-v-	8.03E-06	8.03E-06	8.03E-06	8.03E-06	1	0.00	0.00	1.00
Nickel	D3-v-	5.65E-05	5.65E-05	5.65E-05	5.65E-05	1	0.00	0.00	0.00
Phenol	C3-v-	4.37E-05	4.37E-05	4.37E-05	4.37E-05	1	0.00	0.00	1.00
Selenium	D3-v-	1.09E-05	1.09E-05	1.09E-05	1.09E-05	1	0.00	0.00	0.00
Xylene (Total)	E3-v-	7.17E-04	7.17E-04	7.17E-04	7.17E-04	1	0.00	0.00	0.00
Zinc	D3-v-	5.04E-04	5.04E-04	5.04E-04	5.04E-04	1	0.00	0.00	1.00

Table D-3a. Summary of Data for Emission Factor Development – Boilers Firing Fuel Oil

Substance	CARB Rating	Emission Factor (lb/Mgal)				Tests	RSD, %	Uncer-tainty, %	Detect Ratio
		Mean	Median	Maximum	Minimum				
Acenaphthene	B3-v0	8.93E-07	8.50E-07	1.56E-06	3.34E-07	2	67.31	53.86	0.87
Acenaphthylene	B3-v0	3.17E-07	3.28E-07	3.58E-07	2.34E-07	2	14.29	11.43	0.00
Acetaldehyde	A3-v1	1.04E-03	4.98E-04	3.35E-03	2.80E-04	2	116.00	92.82	0.75
Acrolein	A3-v0	2.17E-03	1.75E-03	3.35E-03	1.43E-03	1	47.31	53.53	0.00
Anthracene	B3-v1	3.22E-07	2.84E-07	7.42E-07	1.90E-08	2	98.99	79.20	0.94
Arsenic	B3-v0	1.44E-03	1.44E-03	1.68E-03	1.19E-03	1	17.00	19.24	0.00
Benzene	A3-v0	4.63E-03	4.67E-03	4.76E-03	4.47E-03	1	3.26	3.69	0.00
Benzo(a)anthracene	B3-v1	2.04E-07	2.21E-07	3.58E-07	2.98E-08	2	78.58	62.87	0.00
Benzo(a)pyrene	B3-v0	2.09E-07	2.24E-07	3.58E-07	4.61E-08	2	73.55	58.55	0.00
Benzo(b)fluoranthene	B3-v0	1.21E-06	1.02E-06	2.36E-06	3.34E-07	2	73.99	59.20	0.40
Benzo(e)pyrene	C3-v0	8.53E-07	1.03E-06	1.12E-06	4.11E-07	1	45.15	51.09	0.00
Benzo(g,h,i)perylene	B3-v0	9.99E-07	8.47E-07	2.20E-06	3.34E-07	2	77.58	62.08	0.00
Benzo(k)fluoranthene	B3-v1	2.08E-07	2.37E-07	3.58E-07	2.98E-08	2	76.76	61.42	0.00
Beryllium	B3-v0	6.29E-05	6.35E-05	7.03E-05	5.50E-05	1	12.22	13.83	0.00
1,3-Butadiene	B3-v1	6.17E-03	5.97E-03	1.18E-02	8.95E-04	2	93.74	75.01	0.00
Cadmium	B3-v0	8.56E-04	6.58E-04	1.26E-03	6.47E-04	1	41.15	46.57	0.00
Chloroform	A3-v0	4.69E-03	5.00E-03	5.10E-03	4.78E-03	1	3.26	3.69	0.00
2-Chloronaphthalene	C3-v0	2.27E-08	2.33E-08	2.86E-08	1.63E-08	1	27.13	30.70	0.00
Chromium (Hex)	A3-v0	1.15E-03	1.15E-03	1.21E-03	1.09E-03	1	4.95	5.60	0.00
Chromium (Total)	A3-v0	4.83E-03	5.18E-03	5.85E-03	3.45E-03	1	25.70	29.08	1.00
Chrysene	B3-v0	3.88E-06	3.26E-06	8.57E-06	1.16E-06	2	78.87	63.11	1.00
Copper	B3-v0	3.86E-03	2.02E-03	8.67E-03	8.92E-04	1	108.86	123.19	1.00
Dibenz(a,h)anthracene	B3-v1	7.06E-07	3.43E-07	2.68E-06	2.07E-07	2	136.88	109.33	0.00
Dioxin: 4D 2378	C3-v0	6.33E-10	5.71E-10	7.83E-10	5.46E-10	1	20.50	23.20	0.00
Dioxin: 5D 12378	C3-v0	3.68E-10	2.73E-10	5.71E-10	2.61E-10	1	47.67	53.94	0.00
Dioxin: 6D 123478	C3-v0	3.68E-10	2.73E-10	5.71E-10	2.61E-10	1	47.67	53.94	0.00
Dioxin: 6D 123678	C3-v0	3.68E-10	2.73E-10	5.71E-10	2.61E-10	1	47.67	53.94	0.25
Dioxin: 6D 123789	C3-v0	3.68E-10	2.73E-10	5.71E-10	2.61E-10	1	47.67	53.94	0.25
Dioxin: 7D 1234678	C3-v0	3.12E-09	2.86E-09	5.19E-09	1.30E-09	1	62.77	71.03	1.00
Dioxin: 8D	C3-v0	7.50E-08	8.28E-08	1.23E-07	1.93E-08	1	69.66	78.83	1.00
Fluoranthene	B3-v1	7.78E-06	6.18E-06	1.65E-05	9.31E-07	2	87.83	70.27	1.00
Fluorene	B3-v0	4.65E-06	4.60E-06	8.48E-06	8.93E-07	2	83.31	66.66	1.00
Formaldehyde	A3-v1	6.72E-03	7.14E-03	1.67E-02	2.83E-04	2	91.09	72.89	0.18
Furan: 4F 2378	C3-v0	8.16E-10	7.83E-10	1.09E-09	5.71E-10	1	32.18	36.42	1.00
Furan: 5F 12378	C3-v0	4.59E-10	5.46E-10	5.71E-10	2.61E-10	1	37.52	42.46	0.00
Furan: 5F 23478	C3-v0	4.59E-10	5.46E-10	5.71E-10	2.61E-10	1	37.52	42.46	0.00
Furan: 6F 123478	C3-v0	3.64E-10	2.86E-10	5.46E-10	2.61E-10	1	43.44	49.15	0.50
Furan: 6F 123678	C3-v0	2.73E-10	2.73E-10	2.86E-10	2.61E-10	1	4.51	5.10	0.33

(continued)

Table D-3a. Summary of Data for Emission Factor Development – Boilers Firing Fuel Oil (continued)

Substance	CARB Rating	Emission Factor (lb/Mgal)				Tests	RSD, %	Uncer-tainty, %	Detect Ratio
		Mean	Median	Maximum	Minimum				
Furan: 6F 123789	C3-v0	3.68E-10	2.73E-10	5.71E-10	2.61E-10	1	47.67	53.94	0.00
Furan: 6F 234678	C3-v0	5.51E-10	5.71E-10	8.20E-10	2.61E-10	1	50.85	57.54	0.50
Furan: 7F 1234678	C3-v0	1.44E-09	1.14E-09	2.09E-09	1.09E-09	1	38.89	44.01	1.00
Furan: 7F 1234789	C3-v0	4.64E-10	2.73E-10	8.57E-10	2.61E-10	1	73.43	83.10	0.00
Furan: 8F	C3-v0	7.15E-09	7.14E-09	1.04E-08	3.91E-09	1	45.27	51.23	1.00
Indeno(1,2,3-cd) pyrene	B3-v0	4.59E-07	3.55E-07	7.82E-07	2.90E-07	2	43.75	35.01	0.00
Lead	B3-v0	1.56E-03	8.59E-04	3.32E-03	4.89E-04	1	98.91	111.92	0.00
Manganese	B3-v0	5.81E-03	2.82E-03	1.22E-02	2.40E-03	1	95.34	107.89	1.00
Mercury	B3-v0	1.03E-05	9.04E-06	1.47E-05	7.19E-06	1	38.06	43.07	0.00
2-Methylnaphthalene	C3-v0	1.09E-05	1.07E-05	1.22E-05	9.76E-06	1	11.52	13.04	1.00
Naphthalene	B3-v0	6.07E-05	6.22E-05	8.12E-05	4.25E-05	2	25.60	20.48	1.00
Nickel	B3-v0	3.34E-01	3.05E-01	4.06E-01	2.90E-01	1	18.95	21.44	1.00
Perylene	C3-v0	1.09E-07	5.95E-08	2.20E-07	4.88E-08	1	87.56	99.09	0.00
Phenanthrene	B3-v0	1.10E-05	1.10E-05	1.99E-05	3.29E-06	2	57.86	46.30	1.00
Propylene	A3-v0	2.19E-02	2.21E-02	2.25E-02	2.11E-02	1	3.26	3.69	0.00
Pyrene	B3-v1	4.01E-06	2.35E-06	1.08E-05	3.53E-07	2	110.05	88.06	0.97
Selenium	B3-v0	2.88E-03	3.59E-03	3.61E-03	1.45E-03	1	43.13	48.81	0.17
Toluene	A3-v0	5.75E-03	5.79E-03	5.91E-03	5.55E-03	1	3.26	3.69	0.00
Xylene (Total)	A3-v0	1.10E-02	1.11E-02	1.14E-02	1.06E-02	1	3.26	3.69	0.00
Zinc	B3-v0	1.60E-02	8.61E-03	3.09E-02	8.56E-03	1	80.41	90.99	1.00

Table D-3b. Summary of Data for Emission Factor Development – Boilers Firing Fuel Oil

Substance	CARB Rating	Emission Factor (lb/MMBtu)				Tests	RSD, %	Uncer-tainty, %	Detect Ratio
		Mean	Median	Maximum	Minimum				
Acenaphthene	B3-v0	6.00E-09	5.71E-09	1.06E-08	2.14E-09	2	69.26	55.42	0.87
Acenaphthylene	B3-v0	2.09E-09	2.16E-09	2.29E-09	1.59E-09	2	12.32	9.86	0.00
Acetaldehyde	A3-v1	6.99E-06	3.33E-06	2.28E-05	1.79E-06	2	117.49	94.01	0.75
Acrolein	A3-v0	1.48E-05	1.19E-05	2.28E-05	9.69E-06	1	47.31	53.53	0.00
Anthracene	B3-v1	2.07E-09	1.83E-09	4.76E-09	1.29E-10	2	98.24	78.60	0.94
Arsenic	B3-v0	9.76E-06	9.76E-06	1.14E-05	8.10E-06	1	17.00	19.24	0.00
Benzene	A3-v0	3.15E-05	3.17E-05	3.24E-05	3.04E-05	1	3.26	3.69	0.00
Benzo(a)anthracene	B3-v1	1.32E-09	1.44E-09	2.29E-09	2.03E-10	2	77.09	61.68	0.00
Benzo(a)pyrene	B3-v0	1.36E-09	1.46E-09	2.29E-09	3.13E-10	2	71.84	57.48	0.00
Benzo(b)fluoranthene	B3-v0	8.11E-09	6.77E-09	1.60E-08	2.14E-09	2	75.81	60.66	0.40
Benzo(e)pyrene	C3-v0	5.80E-09	7.00E-09	7.60E-09	2.80E-09	1	45.15	51.09	0.00
Benzo(g,h,i)perylene	B3-v0	6.72E-09	5.69E-09	1.50E-08	2.14E-09	2	79.36	63.50	0.00
Benzo(k)fluoranthene	B3-v1	1.34E-09	1.55E-09	2.29E-09	2.03E-10	2	75.32	60.26	0.00
Beryllium	B3-v0	4.28E-07	4.32E-07	4.78E-07	3.74E-07	1	12.22	13.83	0.00
1,3-Butadiene	B3-v1	4.18E-05	4.04E-05	8.00E-05	5.74E-06	2	94.58	75.68	0.00
Cadmium	B3-v0	5.82E-06	4.47E-06	8.58E-06	4.40E-06	1	41.15	46.57	0.00
Chloroform	A3-v0	3.37E-05	3.40E-05	3.47E-05	3.25E-05	1	3.26	3.69	0.00
2-Chloronaphthalene	C3-v0	1.54E-10	1.58E-10	1.94E-10	1.11E-10	1	27.13	30.70	0.00
Chromium (Hex)	A3-v0	7.82E-06	7.85E-06	8.20E-06	7.43E-06	1	4.95	5.60	0.00
Chromium (Total)	A3-v0	3.28E-05	3.52E-05	3.98E-05	2.34E-05	1	25.70	29.08	1.00
Chrysene	B3-v0	2.62E-08	2.19E-08	5.83E-08	7.46E-09	2	80.59	64.48	1.00
Copper	B3-v0	2.62E-05	1.37E-05	5.89E-05	6.07E-06	1	108.86	123.19	1.00
Dibenz(a,h)anthracene	B3-v1	4.73E-09	2.20E-09	1.82E-08	1.41E-09	2	139.45	111.58	0.00
Dioxin:4D 2378	C3-v0	4.31E-12	3.88E-12	5.32E-12	3.71E-12	1	20.50	23.20	0.00
Dioxin:5D 12378	C3-v0	2.50E-12	1.86E-12	3.88E-12	1.77E-12	1	47.67	53.94	0.00
Dioxin:6D 123478	C3-v0	2.50E-12	1.86E-12	3.88E-12	1.77E-12	1	47.67	53.94	0.00
Dioxin:6D 123678	C3-v0	2.50E-12	1.86E-12	3.88E-12	1.77E-12	1	47.67	53.94	0.25
Dioxin:6D 123789	C3-v0	2.50E-12	1.86E-12	3.88E-12	1.77E-12	1	47.67	53.94	0.25
Dioxin:7D 1234678	C3-v0	2.12E-11	1.94E-11	3.53E-11	8.87E-12	1	62.77	71.03	1.00
Dioxin:8D	C3-v0	5.10E-10	5.63E-10	8.36E-10	1.31E-10	1	69.66	78.83	1.00
Fluoranthene	B3-v1	5.25E-08	4.14E-08	1.12E-07	5.97E-09	2	89.14	71.33	1.00
Fluorene	B3-v1	3.14E-08	3.10E-08	5.76E-08	5.73E-09	2	84.62	67.71	1.00
Formaldehyde	A3-v1	4.52E-05	4.72E-05	1.14E-04	1.82E-06	2	92.14	73.72	0.18
Furan:4F 2378	C3-v0	5.54E-12	5.32E-12	7.43E-12	3.88E-12	1	32.18	36.42	1.00
Furan:5F 12378	C3-v0	3.12E-12	3.71E-12	3.88E-12	1.77E-12	1	37.52	42.46	0.00
Furan:5F 23478	C3-v0	3.12E-12	3.71E-12	3.88E-12	1.77E-12	1	37.52	42.46	0.00
Furan:6F 123478	C3-v0	2.48E-12	1.94E-12	3.71E-12	1.77E-12	1	43.44	49.15	0.50
Furan:6F 123678	C3-v0	1.86E-12	1.86E-12	1.94E-12	1.77E-12	1	4.51	5.10	0.33

(continued)

Table D-3b. Summary of Data for Emission Factor Development – Boilers Firing Fuel Oil (continued)

Substance	CARB Rating	Emission Factor (lb/MMBtu)				Tests	RSD, %	Uncer-tainty, %	Detect Ratio
		Mean	Median	Maximum	Minimum				
Furan:6F 123789	C3-v0	2.50E-12	1.86E-12	3.88E-12	1.77E-12	1	47.67	53.94	0.00
Furan:6F 234678	C3-v0	3.74E-12	3.88E-12	5.57E-12	1.77E-12	1	50.85	57.54	0.50
Furan:7F 1234678	C3-v0	9.79E-12	7.76E-12	1.42E-11	7.43E-12	1	38.89	44.01	1.00
Furan:7F 1234789	C3-v0	3.15E-12	1.86E-12	5.82E-12	1.77E-12	1	73.43	83.10	0.00
Furan:8F	C3-v0	4.86E-11	4.85E-11	7.06E-11	2.66E-11	1	45.27	51.23	1.00
Indeno(1,2,3-cd)pyrene	B3-v0	3.05E-09	2.28E-09	5.32E-09	1.97E-09	2	46.19	36.96	0.00
Lead	B3-v0	1.06E-05	5.84E-06	2.26E-05	3.32E-06	1	98.91	111.92	0.00
Manganese	B3-v0	3.95E-05	1.92E-05	8.29E-05	1.63E-05	1	95.34	107.89	1.00
Mercury	B3-v0	7.02E-08	6.15E-08	1.00E-07	4.89E-08	1	38.06	43.07	0.00
2-Methylnaphthalene	C3-v0	7.40E-08	7.25E-08	8.32E-08	6.63E-08	1	11.52	13.04	1.00
Naphthalene	B3-v0	4.04E-07	4.11E-07	5.52E-07	2.73E-07	2	28.11	22.49	1.00
Nickel	B3-v0	2.27E-03	2.08E-03	2.76E-03	1.97E-03	1	18.95	21.44	1.00
Perylene	C3-v0	7.44E-10	4.05E-10	1.49E-09	3.32E-10	1	87.56	99.09	0.00
Phenanthrene	B3-v0	7.39E-08	7.35E-08	1.35E-07	2.11E-08	2	60.02	48.02	1.00
Propylene	A3-v0	1.49E-04	1.50E-04	1.53E-04	1.44E-04	1	3.26	3.69	0.00
Pyrene	B3-v1	2.72E-08	1.58E-08	7.37E-08	2.26E-09	2	110.83	88.68	0.97
Selenium	B3-v0	1.96E-05	2.44E-05	2.45E-05	9.83E-06	1	43.13	48.81	0.17
Toluene	A3-v0	3.91E-05	3.94E-05	4.02E-05	3.77E-05	1	3.26	3.69	0.00
Xylene (Total)	A3-v0	7.51E-05	7.56E-05	7.72E-05	7.24E-05	1	3.26	3.69	0.00
Zinc	B3-v0	1.09E-04	5.86E-05	2.10E-04	5.82E-05	1	80.41	90.99	1.00

Table D-4a. Summary of Data for Emission Factor Development – Boilers Firing Refinery Fuel Gas

Substance	CARB Rating	Emission Factor (lb/MMcf)				Tests	RSD, %	Uncer-tainty, %	Detect Ratio
		Mean	Median	Maximum	Minimum				
Acenaphthene	A3-v0	5.88E-06	5.75E-06	6.47E-06	5.44E-06	1	8.97	10.15	0.37
Acenaphthylene	A3-v0	2.56E-06	2.59E-06	2.59E-06	2.50E-06	1	2.04	2.31	0.00
Acetaldehyde	C1-v3	3.97E-03	2.43E-03	1.21E-02	4.92E-06	5	100.80	51.01	1.00
Anthracene	A3-v0	2.28E-05	2.50E-05	3.89E-05	4.40E-06	1	76.23	86.26	1.00
Arsenic	D3-v0	7.04E-04	7.65E-04	1.13E-03	2.11E-04	1	66.10	74.80	1.00
Benzene	C1-v2	2.06E-01	6.24E-02	1.40E+00	3.39E-03	5	180.67	88.53	0.80
Benzo(a)anthracene	A3-v0	1.83E-05	1.79E-05	2.46E-05	1.25E-05	1	33.08	37.44	1.00
Benzo(a)pyrene	A3-v0	3.42E-06	3.37E-06	4.40E-06	2.50E-06	1	27.72	31.36	0.76
Benzo(b)fluoranthene	A3-v0	6.76E-06	7.24E-06	8.28E-06	4.75E-06	1	26.90	30.44	1.00
Benzo(g,h,i)perylene	A3-v0	3.85E-06	3.89E-06	5.17E-06	2.50E-06	1	34.64	39.20	0.78
Benzo(k)fluoranthene	A3-v0	2.56E-06	2.59E-06	2.59E-06	2.50E-06	1	2.04	2.31	0.00
Beryllium	D3-v0	1.55E-04	1.55E-04	1.56E-04	1.53E-04	1	1.35	1.87	1.00
Cadmium	D3-v0	2.38E-03	2.05E-03	3.13E-03	1.98E-03	1	27.01	30.57	1.00
Chromium (Hex)	C3-v0	7.70E-03	7.56E-03	1.09E-02	4.67E-03	1	40.17	45.45	0.00
Chromium (Total)	C3-v1	1.28E-02	5.43E-03	3.08E-02	2.16E-03	1	122.51	138.63	1.00
Chrysene	A3-v0	3.42E-06	2.59E-06	5.17E-06	2.50E-06	1	44.30	50.13	0.50
Copper	D3-v0	6.30E-03	6.30E-03	7.71E-03	4.89E-03	1	31.59	43.78	1.00
Dibenz(a,h)anthracene	A3-v0	2.56E-06	2.59E-06	2.59E-06	2.50E-06	1	2.04	2.31	0.00
Fluoranthene	A3-v0	4.25E-05	3.10E-05	7.24E-05	2.40E-05	1	61.63	69.74	1.00
Fluorene	A3-v0	9.78E-06	5.75E-06	1.82E-05	5.44E-06	1	74.23	84.00	1.00
Formaldehyde	C1-v1	1.60E-02	1.41E-02	4.14E-02	3.24E-03	5	62.29	31.52	1.00
Hydrogen Sulfide	A1-v1	2.74E-01	2.37E-01	7.15E-01	5.94E-02	5	89.81	44.00	0.00
Indeno(1,2,3-cd)pyrene	A3-v0	2.56E-06	2.59E-06	2.59E-06	2.50E-06	1	2.04	2.31	0.00
Lead	D3-v0	2.42E-03	2.42E-03	2.49E-03	2.36E-03	1	3.87	5.36	1.00
Manganese	D3-v0	2.39E-03	2.39E-03	3.14E-03	1.64E-03	1	44.52	61.70	1.00
Mercury	D3-v0	3.23E-04	3.18E-04	3.82E-04	2.70E-04	1	17.33	19.60	0.00
Naphthalene	A3-v0	2.06E-04	1.94E-04	2.40E-04	1.85E-04	1	14.51	16.42	1.00
Nickel	D3-v0	5.59E-03	5.59E-03	7.03E-03	4.16E-03	1	36.33	50.35	1.00
Phenanthrene	A3-v0	5.64E-05	4.49E-05	8.80E-05	3.62E-05	1	49.24	55.72	1.00
Phenol	C2-v0	2.18E-03	8.64E-04	5.66E-03	7.28E-04	4	98.89	54.25	0.85
Pyrene	A3-v0	5.98E-05	5.17E-05	8.28E-05	4.49E-05	1	33.82	38.27	1.00
Selenium	D3-v0	2.06E-03	2.36E-03	2.83E-03	9.79E-04	1	46.79	52.94	0.16
Toluene	E2-v2	8.40E-01	8.35E-02	5.00E+00	4.14E-02	3	189.87	124.04	0.97
Zinc	D3-v2	3.42E+00	3.82E-01	9.78E+00	9.27E-02	1	161.24	182.45	1.00

Table D-4b. Summary of Data for Emission Factor Development – Boilers Firing Refinery Fuel Gas

Substance	CARB Rating	Emission Factor (lb/MMBtu)				Tests	RSD, %	Uncer-tainty, %	Detect Ratio
		Mean	Median	Maximum	Minimum				
Acenaphthene	A3-v0	4.90E-09	4.65E-09	5.46E-09	4.59E-09	1	9.89	11.20	0.37
Acenaphthylene	A3-v0	2.13E-09	2.19E-09	2.19E-09	2.02E-09	1	4.43	5.01	0.00
Acetaldehyde	C1-v3	3.01E-06	2.11E-06	1.01E-05	4.10E-09	5	95.45	48.30	1.00
Anthracene	A3-v0	1.89E-08	2.02E-08	3.28E-08	3.71E-09	1	77.14	87.30	1.00
Arsenic	D3-v0	5.88E-07	6.46E-07	9.40E-07	1.78E-07	1	65.36	73.95	1.00
Benzene	C1-v2	1.74E-04	5.03E-05	1.22E-03	2.86E-06	5	186.11	91.19	0.80
Benzo(a)anthracene	A3-v0	1.53E-08	1.51E-08	2.07E-08	1.01E-08	1	34.78	39.35	1.00
Benzo(a)pyrene	A3-v0	2.86E-09	2.84E-09	3.71E-09	2.02E-09	1	29.49	33.37	0.76
Benzo(b)fluoranthene	A3-v0	5.65E-09	6.11E-09	6.99E-09	3.84E-09	1	28.79	32.57	1.00
Benzo(g,h,i)perylene	A3-v0	3.22E-09	3.28E-09	4.36E-09	2.02E-09	1	36.33	41.11	0.78
Benzo(k)fluoranthene	A3-v0	2.13E-09	2.19E-09	2.19E-09	2.02E-09	1	4.43	5.01	0.00
Beryllium	D3-v0	1.31E-07	1.31E-07	1.32E-07	1.29E-07	1	1.35	1.87	1.00
Cadmium	D3-v0	2.00E-06	1.70E-06	2.64E-06	1.67E-06	1	27.60	31.23	1.00
Chromium (Hex)	C3-v0	6.32E-06	6.29E-06	8.78E-06	3.89E-06	1	38.70	43.79	0.00
Chromium (Total)	C3-v1	1.04E-05	4.51E-06	2.49E-05	1.80E-06	1	121.39	137.36	1.00
Chrysene	A3-v0	2.86E-09	2.19E-09	4.36E-09	2.02E-09	1	45.70	51.71	0.50
Copper	D3-v0	5.32E-06	5.32E-06	6.51E-06	4.13E-06	1	31.59	43.78	1.00
Dibenz(a,h)anthracene	A3-v0	2.13E-09	2.19E-09	2.19E-09	2.02E-09	1	4.43	5.01	0.00
Fluoranthene	A3-v0	3.56E-08	2.62E-08	6.11E-08	1.94E-08	1	62.95	71.23	1.00
Fluorene	A3-v0	8.19E-09	4.65E-09	1.53E-08	4.59E-09	1	75.53	85.46	1.00
Formaldehyde	C1-v1	1.32E-05	1.16E-05	3.62E-05	2.81E-06	5	66.84	33.82	1.00
Hydrogen Sulfide	A1-v1	2.21E-04	1.69E-04	5.93E-04	5.01E-05	5	92.80	45.47	0.00
Indeno(1,2,3-cd)pyrene	A3-v0	2.13E-09	2.19E-09	2.19E-09	2.02E-09	1	4.43	5.01	0.00
Lead	D3-v0	2.05E-06	2.05E-06	2.10E-06	1.99E-06	1	3.87	5.36	1.00
Manganese	D3-v0	2.02E-06	2.02E-06	2.65E-06	1.38E-06	1	44.52	61.70	1.00
Mercury	D3-v0	2.72E-07	2.69E-07	3.22E-07	2.24E-07	1	18.19	20.58	0.00
Naphthalene	A3-v0	1.72E-07	1.63E-07	2.03E-07	1.49E-07	1	16.13	18.25	1.00
Nickel	D3-v0	4.72E-06	4.72E-06	5.94E-06	3.51E-06	1	36.33	50.35	1.00
Phenanthrene	A3-v0	4.71E-08	3.63E-08	7.43E-08	3.06E-08	1	50.50	57.15	1.00
Phenol	C2-v0	1.83E-06	7.04E-07	4.91E-06	5.45E-07	4	99.84	56.49	0.85
Pyrene	A3-v0	5.00E-08	4.36E-08	6.99E-08	3.63E-08	1	35.35	40.00	1.00
Selenium	D3-v0	1.73E-06	1.99E-06	2.39E-06	8.11E-07	1	47.44	53.68	0.16
Toluene	E2-v2	7.23E-04	7.25E-05	4.37E-03	3.59E-05	3	193.00	126.09	0.97
Zinc	D3-v2	2.83E-03	3.22E-04	8.10E-03	7.83E-05	1	161.02	182.20	1.00

Table D-5a. Summary of Data for Emission Factor Development – Boilers Firing Refinery Fuel Gas Controlled with Selective Catalytic Reduction (NO_x)

Substance	CARB Rating	Emission Factor (lb/MMcf)				Tests	RSD, %	Uncer-tainty, %	Detect Ratio
		Mean	Median	Maximum	Minimum				
Acenaphthene	A3-v0	5.88E-06	5.75E-06	6.47E-06	5.44E-06	1	8.97	10.15	0.37
Acenaphthylene	A3-v0	2.56E-06	2.59E-06	2.59E-06	2.50E-06	1	2.04	2.31	0.00
Acetaldehyde	C1-v3	3.97E-03	2.43E-03	1.21E-02	4.92E-06	5	100.80	51.01	1.00
Anthracene	A3-v0	2.28E-05	2.50E-05	3.89E-05	4.40E-06	1	76.23	86.26	1.00
Arsenic	D3-v0	7.04E-04	7.65E-04	1.13E-03	2.11E-04	1	66.10	74.80	1.00
Benzene	C1-v2	2.06E-01	6.24E-02	1.40E+00	3.39E-03	5	180.67	88.53	0.80
Benzo(a)anthracene	A3-v0	1.83E-05	1.79E-05	2.46E-05	1.25E-05	1	33.08	37.44	1.00
Benzo(a)pyrene	A3-v0	3.42E-06	3.37E-06	4.40E-06	2.50E-06	1	27.72	31.36	0.76
Benzo(b)fluoranthene	A3-v0	6.76E-06	7.24E-06	8.28E-06	4.75E-06	1	26.90	30.44	1.00
Benzo(g,h,i)perylene	A3-v0	3.85E-06	3.89E-06	5.17E-06	2.50E-06	1	34.64	39.20	0.78
Benzo(k)fluoranthene	A3-v0	2.56E-06	2.59E-06	2.59E-06	2.50E-06	1	2.04	2.31	0.00
Beryllium	D3-v0	1.55E-04	1.55E-04	1.56E-04	1.53E-04	1	1.35	1.87	1.00
Cadmium	D3-v0	2.38E-03	2.05E-03	3.13E-03	1.98E-03	1	27.01	30.57	1.00
Chromium (Hex)	C3-v0	7.70E-03	7.56E-03	1.09E-02	4.67E-03	1	40.17	45.45	0.00
Chromium (Total)	C3-v1	1.28E-02	5.43E-03	3.08E-02	2.16E-03	1	122.51	138.63	1.00
Chrysene	A3-v0	3.42E-06	2.59E-06	5.17E-06	2.50E-06	1	44.30	50.13	0.50
Copper	D3-v0	6.30E-03	6.30E-03	7.71E-03	4.89E-03	1	31.59	43.78	1.00
Dibenz(a,h)anthracene	A3-v0	2.56E-06	2.59E-06	2.59E-06	2.50E-06	1	2.04	2.31	0.00
Fluoranthene	A3-v0	4.25E-05	3.10E-05	7.24E-05	2.40E-05	1	61.63	69.74	1.00
Fluorene	A3-v0	9.78E-06	5.75E-06	1.82E-05	5.44E-06	1	74.23	84.00	1.00
Formaldehyde	C1-v1	1.60E-02	1.41E-02	4.14E-02	3.24E-03	5	62.29	31.52	1.00
Hydrogen Sulfide	A1-v1	2.74E-01	2.37E-01	7.15E-01	5.94E-02	5	89.81	44.00	0.00
Indeno(1,2,3-cd)pyrene	A3-v0	2.56E-06	2.59E-06	2.59E-06	2.50E-06	1	2.04	2.31	0.00
Lead	D3-v0	2.42E-03	2.42E-03	2.49E-03	2.36E-03	1	3.87	5.36	1.00
Manganese	D3-v0	2.39E-03	2.39E-03	3.14E-03	1.64E-03	1	44.52	61.70	1.00
Mercury	D3-v0	3.23E-04	3.18E-04	3.82E-04	2.70E-04	1	17.33	19.60	0.00
Naphthalene	A3-v0	2.06E-04	1.94E-04	2.40E-04	1.85E-04	1	14.51	16.42	1.00
Nickel	D3-v0	5.59E-03	5.59E-03	7.03E-03	4.16E-03	1	36.33	50.35	1.00
Phenanthrene	A3-v0	5.64E-05	4.49E-05	8.80E-05	3.62E-05	1	49.24	55.72	1.00
Phenol	C2-v0	2.18E-03	8.64E-04	5.66E-03	7.28E-04	4	95.89	54.25	0.85
Pyrene	A3-v0	5.98E-05	5.17E-05	8.28E-05	4.49E-05	1	33.82	38.27	1.00
Selenium	D3-v0	2.06E-03	2.36E-03	2.83E-03	9.79E-04	1	46.79	52.94	0.16
Toluene	E2-v2	8.40E-01	8.35E-02	5.00E+00	4.14E-02	3	189.87	124.04	0.97
Zinc	D3-v2	3.42E+00	3.82E-01	9.78E+00	9.27E-02	1	161.24	182.45	1.00

Table D-5b. Summary of Data for Emission Factor Development – Boilers Firing Refinery Fuel Gas Controlled with Selective Catalytic Reduction (NO_x)

Substance	CARB Rating	Emission Factor (lb/MMBtu)				Tests	RSD, %	Uncer-tainty, %	Detect Ratio
		Mean	Median	Maximum	Minimum				
Acenaphthene	A3-v0	4.90E-09	4.65E-09	5.46E-09	4.59E-09	1	9.89	11.20	0.37
Acenaphthylene	A3-v0	2.13E-09	2.19E-09	2.19E-09	2.02E-09	1	4.43	5.01	0.00
Acetaldehyde	C1-v3	3.01E-06	2.11E-06	1.01E-05	4.10E-09	5	95.45	48.30	1.00
Anthracene	A3-v0	1.89E-08	2.02E-08	3.28E-08	3.71E-09	1	77.14	87.30	1.00
Arsenic	D3-v0	5.88E-07	6.46E-07	9.40E-07	1.78E-07	1	65.36	73.95	1.00
Benzene	C1-v2	1.74E-04	5.03E-05	1.22E-03	2.86E-06	5	186.11	91.19	0.80
Benzo(a)anthracene	A3-v0	1.53E-08	1.51E-08	2.07E-08	1.01E-08	1	34.78	39.35	1.00
Benzo(a)pyrene	A3-v0	2.86E-09	2.84E-09	3.71E-09	2.02E-09	1	29.49	33.37	0.76
Benzo(b)fluoranthene	A3-v0	5.65E-09	6.11E-09	6.99E-09	3.84E-09	1	28.79	32.57	1.00
Benzo(g,h,i)perylene	A3-v0	3.22E-09	3.28E-09	4.36E-09	2.02E-09	1	36.33	41.11	0.78
Benzo(k)fluoranthene	A3-v0	2.13E-09	2.19E-09	2.19E-09	2.02E-09	1	4.43	5.01	0.00
Beryllium	D3-v0	1.31E-07	1.31E-07	1.32E-07	1.29E-07	1	1.35	1.87	1.00
Cadmium	D3-v0	2.00E-06	1.70E-06	2.64E-06	1.67E-06	1	27.60	31.23	1.00
Chromium (Hex)	C3-v0	6.32E-06	6.29E-06	8.78E-06	3.89E-06	1	38.70	43.79	0.00
Chromium (Total)	C3-v1	1.04E-05	4.51E-06	2.49E-05	1.80E-06	1	121.39	137.36	1.00
Chrysene	A3-v0	2.86E-09	2.19E-09	4.36E-09	2.02E-09	1	45.70	51.71	0.50
Copper	D3-v0	5.32E-06	5.32E-06	6.51E-06	4.13E-06	1	31.59	43.78	1.00
Dibenz(a,h)anthracene	A3-v0	2.13E-09	2.19E-09	2.19E-09	2.02E-09	1	4.43	5.01	0.00
Fluoranthene	A3-v0	3.56E-08	2.62E-08	6.11E-08	1.94E-08	1	62.95	71.23	1.00
Fluorene	A3-v0	8.19E-09	4.65E-09	1.53E-08	4.59E-09	1	75.53	85.46	1.00
Formaldehyde	C1-v1	1.32E-05	1.16E-05	3.62E-05	2.81E-06	5	66.84	33.82	1.00
Hydrogen Sulfide	A1-v1	2.21E-04	1.69E-04	5.93E-04	5.01E-05	5	92.80	45.47	0.00
Indeno(1,2,3-cd)pyrene	A3-v0	2.13E-09	2.19E-09	2.19E-09	2.02E-09	1	4.43	5.01	0.00
Lead	D3-v0	2.05E-06	2.05E-06	2.10E-06	1.99E-06	1	3.87	5.36	1.00
Manganese	D3-v0	2.02E-06	2.02E-06	2.65E-06	1.38E-06	1	44.52	61.70	1.00
Mercury	D3-v0	2.72E-07	2.69E-07	3.22E-07	2.24E-07	1	18.19	20.58	0.00
Naphthalene	A3-v0	1.72E-07	1.63E-07	2.03E-07	1.49E-07	1	16.13	18.25	1.00
Nickel	D3-v0	4.72E-06	4.72E-06	5.94E-06	3.51E-06	1	36.33	50.35	1.00
Phenanthrene	A3-v0	4.71E-08	3.63E-08	7.43E-08	3.06E-08	1	50.50	57.15	1.00
Phenol	C2-v0	1.83E-06	7.04E-07	4.91E-06	5.45E-07	4	99.84	56.49	0.85
Pyrene	A3-v0	5.00E-08	4.36E-08	6.99E-08	3.63E-08	1	35.35	40.00	1.00
Selenium	D3-v0	1.73E-06	1.99E-06	2.39E-06	8.11E-07	1	47.44	53.68	0.16
Toluene	E2-v2	7.23E-04	7.25E-05	4.37E-03	3.59E-05	3	193.00	126.09	0.97
Zinc	D3-v2	2.83E-03	3.22E-04	8.10E-03	7.83E-05	1	161.02	182.20	1.00

Table D-6a. Summary of Data for Emission Factor Development – Coke Calcining Controlled by Spray Dryer and Fabric Filter

Substance	CARB Rating	Emission Factor (lb/ton coke)				Tests	RSD, %	Uncer-tainty, %	Detect Ratio
		Mean	Median	Maximum	Minimum				
Acenaphthene	A3-v0	1.46E-08	1.38E-08	1.64E-08	1.37E-08	1	10.68	12.08	1.00
Acenaphthylene	A3-v0	1.83E-08	1.69E-08	2.81E-08	9.87E-09	1	50.39	57.02	1.00
Acetaldehyde	A3-v0	1.02E-03	1.16E-03	1.22E-03	6.77E-04	1	29.23	33.07	1.00
Acrolein	A3-v0	3.36E-04	3.41E-04	3.60E-04	3.08E-04	1	7.79	8.82	0.00
Anthracene	A3-v0	1.82E-08	1.84E-08	1.97E-08	1.64E-08	1	9.02	10.20	1.00
Antimony	C3-v0	4.61E-05	4.64E-05	4.79E-05	4.41E-05	1	4.04	4.57	0.34
Arsenic	C3-v0	4.66E-06	4.64E-06	4.92E-06	4.41E-06	1	5.42	6.13	0.00
Barium	C3-v0	1.95E-05	1.99E-05	2.46E-05	1.39E-05	1	27.51	31.13	1.00
Benzene	C3-v0	3.24E-04	4.06E-04	4.50E-04	1.15E-04	1	56.20	63.60	1.00
Benzo(a)anthracene	A3-v0	8.71E-09	8.25E-09	1.02E-08	7.67E-09	1	15.15	17.15	0.39
Benzo(a)pyrene	A3-v0	8.05E-09	8.22E-09	8.25E-09	7.67E-09	1	4.04	4.57	0.00
Benzo(b)fluoranthene	A3-v0	8.05E-09	8.22E-09	8.25E-09	7.67E-09	1	4.04	4.57	0.00
Benzo(g,h,i)perylene	A3-v0	8.05E-09	8.22E-09	8.25E-09	7.67E-09	1	4.04	4.57	0.00
Benzo(k)fluoranthene	A3-v0	8.05E-09	8.22E-09	8.25E-09	7.67E-09	1	4.04	4.57	0.00
Beryllium	C3-v0	1.93E-06	1.72E-06	2.43E-06	1.63E-06	1	22.77	25.76	0.42
Cadmium	C3-v0	9.32E-06	9.27E-06	9.84E-06	8.84E-06	1	5.34	6.04	0.00
Chromium (Hex)	C3-v0	6.31E-07	6.30E-07	7.17E-07	5.45E-07	1	13.63	15.42	1.00
Chromium (Total)	C3-v0	2.05E-05	2.04E-05	2.09E-05	2.01E-05	1	1.82	2.06	1.00
Chrysene	A3-v0	1.28E-08	1.18E-08	1.84E-08	8.25E-09	1	40.02	45.28	0.79
Copper	C3-v0	9.32E-06	9.27E-06	9.84E-06	8.84E-06	1	5.34	6.04	0.00
Dibenz(a,h)anthracene	A3-v0	8.05E-09	8.22E-09	8.25E-09	7.67E-09	1	4.04	4.57	0.00
Dioxin:4D 2378	A3-v0	1.14E-11	1.18E-11	1.32E-11	9.05E-12	1	18.56	21.00	0.00
Dioxin:4D Other	A3-v0	1.44E-10	1.01E-10	2.99E-10	3.17E-11	1	96.53	109.23	1.00
Dioxin:5D 12378	A3-v0	9.56E-12	9.20E-12	1.35E-11	6.01E-12	1	39.05	44.19	0.00
Dioxin:5D Other	A3-v0	8.45E-11	8.83E-11	1.02E-10	6.34E-11	1	23.10	26.14	0.40
Dioxin:6D 123478	A3-v0	9.93E-12	9.24E-12	1.57E-11	4.83E-12	1	55.10	62.35	0.31
Dioxin:6D 123678	A3-v0	1.38E-11	1.27E-11	2.04E-11	8.30E-12	1	44.48	50.33	0.69
Dioxin:6D 123789	A3-v0	1.29E-11	1.45E-11	1.50E-11	9.20E-12	1	24.83	28.10	0.39
Dioxin:6D Other	A3-v0	6.36E-11	6.71E-11	8.96E-11	3.39E-11	1	44.09	49.89	0.65
Dioxin:7D 1234678	A3-v0	1.38E-10	1.18E-10	2.18E-10	7.96E-11	1	51.62	58.41	1.00
Dioxin:7D Other	A3-v0	1.32E-10	1.09E-10	1.90E-10	9.72E-11	1	38.24	43.27	1.00
Dioxin:8D	A3-v0	1.77E-09	1.79E-09	2.76E-09	7.60E-10	1	56.40	63.82	1.00
Fluoranthene	A3-v0	3.58E-08	3.30E-08	4.30E-08	3.13E-08	1	17.64	19.96	1.00
Fluorene	A3-v0	5.64E-08	5.21E-08	6.61E-08	5.10E-08	1	14.90	16.86	1.00
Formaldehyde	A3-v0	3.36E-04	3.41E-04	3.60E-04	3.08E-04	1	7.79	8.82	0.00
Furan:4F 2378	A3-v0	1.33E-11	1.19E-11	1.63E-11	1.18E-11	1	19.13	21.65	0.70
Furan:4F Other	A3-v0	1.39E-10	1.10E-10	2.15E-10	9.21E-11	1	47.70	53.98	1.00
Furan:5F 12378	A3-v0	1.36E-11	1.43E-11	1.50E-11	1.16E-11	1	13.01	14.72	0.65

(continued)

Table D-6a. Summary of Data for Emission Factor Development – Coke Calcining Controlled by Spray Dryer and Fabric Filter (continued)

Substance	CARB Rating	Emission Factor (lb/ton coke)				Tests	RSD, %	Uncer-tainty, %	Detect Ratio
		Mean	Median	Maximum	Minimum				
Furan:5F 23478	A3-v0	1.25E-11	1.38E-11	1.46E-11	9.10E-12	1	23.87	27.01	0.63
Furan:5F Other	A3-v0	1.20E-10	9.47E-11	1.79E-10	8.70E-11	1	42.57	48.17	0.74
Furan:6F 123478	A3-v0	2.44E-11	2.49E-11	2.71E-11	2.12E-11	1	12.27	13.89	1.00
Furan:6F 123678	A3-v0	2.21E-11	2.19E-11	3.13E-11	1.31E-11	1	41.02	46.42	1.00
Furan:6F 123789	A3-v0	9.19E-12	8.96E-12	1.20E-11	6.64E-12	1	29.03	32.85	0.67
Furan:6F 234678	A3-v0	2.01E-11	2.04E-11	2.04E-11	1.96E-11	1	2.55	2.88	1.00
Furan:6F Other	A3-v0	1.52E-10	1.31E-10	2.36E-10	9.04E-11	1	49.18	55.66	1.00
Furan:7F 1234678	A3-v0	1.50E-10	1.42E-10	1.76E-10	1.32E-10	1	15.51	17.55	1.00
Furan:7F 1234789	A3-v0	2.56E-11	2.56E-11	2.99E-11	2.12E-11	1	17.09	19.33	0.72
Furan:7F Other	A3-v0	5.16E-11	5.16E-11	5.16E-11	5.16E-11	1	0.00	0.00	0.50
Furan:8F	A3-v1	1.46E-10	1.36E-10	2.86E-10	1.61E-11	1	92.60	104.78	1.00
Indeno(1,2,3-cd)pyrene	A3-v0	8.05E-09	8.22E-09	8.25E-09	7.67E-09	1	4.04	4.57	0.00
Lead	C3-v0	6.20E-05	4.92E-05	9.27E-05	4.41E-05	1	43.08	48.75	0.50
Manganese	C3-v0	4.56E-05	4.41E-05	7.63E-05	1.63E-05	1	65.87	74.54	0.88
Mercury	C3-v1	4.63E-05	1.63E-05	1.12E-04	1.08E-05	1	122.58	138.71	1.00
Naphthalene	A3-v0	2.41E-06	2.46E-06	3.14E-06	1.64E-06	1	31.02	35.10	1.00
Nickel	C3-v0	9.06E-05	4.92E-05	1.76E-04	4.64E-05	1	81.90	92.67	0.65
Phenanthrene	A3-v0	1.88E-07	1.81E-07	2.15E-07	1.69E-07	1	12.67	14.34	1.00
Phosphorus	C3-v0	4.66E-04	4.64E-04	4.92E-04	4.41E-04	1	5.42	6.13	0.00
Pyrene	A3-v0	2.67E-08	2.64E-08	3.23E-08	2.15E-08	1	20.27	22.94	1.00
Selenium	C3-v0	4.66E-06	4.64E-06	4.92E-06	4.41E-06	1	5.42	6.13	0.00
Silver	C3-v0	1.63E-05	1.63E-05	1.72E-05	1.54E-05	1	5.45	6.17	0.00
Thallium	C3-v0	6.99E-05	6.96E-05	7.38E-05	6.64E-05	1	5.31	6.01	0.00
Toluene	C3-v0	5.34E-05	4.46E-05	7.17E-05	4.39E-05	1	29.73	33.64	1.00
Xylene (m,p)	C3-v0	3.09E-05	3.44E-05	3.79E-05	2.04E-05	1	29.89	33.82	0.22
Xylene (o)	C3-v0	4.49E-05	4.34E-05	4.79E-05	4.34E-05	1	5.72	6.47	0.00
Zinc	C3-v0	1.17E-04	1.04E-04	1.63E-04	8.37E-05	1	35.15	39.78	1.00

Table D-6b. Summary of Data for Emission Factor Development – Coke Calcining Controlled by Spray Dryer and Fabric Filter

Substance	CARB Rating	Emission Factor (lb/MMBtu)				Tests	RSD, %	Uncer-tainty, %	Detect Ratio
		Mean	Median	Maximum	Minimum				
Acenaphthene	A3-v0	4.40E-08	4.06E-08	5.43E-08	3.70E-08	1	20.68	23.40	1.00
Acenaphthylene	A3-v0	5.59E-08	4.58E-08	9.29E-08	2.90E-08	1	59.27	67.06	1.00
Acetaldehyde	A3-v0	3.12E-03	3.14E-03	3.89E-03	2.33E-03	1	24.96	28.25	1.00
Acrolein	A3-v0	1.04E-03	1.06E-03	1.14E-03	9.25E-04	1	10.62	12.02	0.00
Anthracene	A3-v0	5.40E-08	5.43E-08	5.79E-08	4.98E-08	1	7.50	8.48	1.00
Antimony	C3-v0	1.44E-04	1.42E-04	1.52E-04	1.37E-04	1	5.19	5.87	0.34
Arsenic	C3-v0	1.45E-05	1.42E-05	1.56E-05	1.37E-05	1	6.73	7.62	0.00
Barium	C3-v0	6.10E-05	6.40E-05	7.79E-05	4.11E-05	1	30.51	34.52	1.00
Benzene	C3-v0	1.03E-03	1.39E-03	1.45E-03	2.62E-04	1	64.73	73.25	1.00
Benzo(a)anthracene	A3-v0	2.60E-08	2.72E-08	2.99E-08	2.08E-08	1	18.05	20.43	0.39
Benzo(a)pyrene	A3-v0	2.41E-08	2.42E-08	2.72E-08	2.08E-08	1	13.35	15.10	0.00
Benzo(b)fluoranthene	A3-v0	2.41E-08	2.42E-08	2.72E-08	2.08E-08	1	13.35	15.10	0.00
Benzo(g,h,i)perylene	A3-v0	2.41E-08	2.42E-08	2.72E-08	2.08E-08	1	13.35	15.10	0.00
Benzo(k)fluoranthene	A3-v0	2.41E-08	2.42E-08	2.72E-08	2.08E-08	1	13.35	15.10	0.00
Beryllium	C3-v0	6.03E-06	5.45E-06	7.83E-06	4.81E-06	1	26.41	29.88	0.42
Cadmium	C3-v0	2.90E-05	2.85E-05	3.12E-05	2.74E-05	1	6.71	7.59	0.00
Chromium (Hex)	C3-v0	2.12E-06	1.93E-06	2.88E-06	1.54E-06	1	32.38	36.64	1.00
Chromium (Total)	C3-v0	6.90E-05	5.92E-05	9.35E-05	5.44E-05	1	30.92	34.99	1.00
Chrysene	A3-v0	3.73E-08	3.48E-08	4.98E-08	2.72E-08	1	30.84	34.90	0.79
Copper	C3-v0	2.90E-05	2.85E-05	3.12E-05	2.74E-05	1	6.71	7.59	0.00
Dibenz(a,h)anthracene	A3-v0	2.41E-08	2.42E-08	2.72E-08	2.08E-08	1	13.35	15.10	0.00
Dioxin:4D 2378	A3-v0	3.68E-11	3.66E-11	4.86E-11	2.51E-11	1	31.88	36.08	0.00
Dioxin:4D Other	A3-v0	4.44E-10	4.14E-10	8.31E-10	8.81E-11	1	83.85	94.88	1.00
Dioxin:5D 12378	A3-v0	2.92E-11	2.56E-11	3.74E-11	2.47E-11	1	24.24	27.43	0.00
Dioxin:5D Other	A3-v0	2.74E-10	2.83E-10	3.63E-10	1.76E-10	1	34.15	38.64	0.40
Dioxin:6D 123478	A3-v0	3.45E-11	2.57E-11	6.45E-11	1.34E-11	1	77.21	87.37	0.31
Dioxin:6D 123678	A3-v0	4.40E-11	5.23E-11	5.68E-11	2.30E-11	1	41.59	47.07	0.69
Dioxin:6D 123789	A3-v0	4.22E-11	4.16E-11	5.95E-11	2.56E-11	1	40.22	45.52	0.39
Dioxin:6D Other	A3-v0	2.06E-10	2.49E-10	2.76E-10	9.42E-11	1	47.47	53.72	0.65
Dioxin:7D 1234678	A3-v0	4.19E-10	3.27E-10	6.05E-10	3.27E-10	1	38.30	43.34	1.00
Dioxin:7D Other	A3-v0	4.09E-10	3.99E-10	5.27E-10	3.02E-10	1	27.59	31.22	1.00
Dioxin:8D	A3-v0	5.25E-09	4.98E-09	7.65E-09	3.12E-09	1	43.40	49.11	1.00
Fluoranthene	A3-v0	1.06E-07	1.09E-07	1.16E-07	9.18E-08	1	11.95	13.52	1.00
Fluorene	A3-v0	1.70E-07	1.50E-07	2.18E-07	1.41E-07	1	24.78	28.04	1.00
Formaldehyde	A3-v0	1.04E-03	1.06E-03	1.14E-03	9.25E-04	1	10.62	12.02	0.00
Furan:4F 2378	A3-v0	4.23E-11	4.53E-11	4.85E-11	3.31E-11	1	19.19	21.72	0.70
Furan:4F Other	A3-v0	4.35E-10	4.51E-10	5.97E-10	2.56E-10	1	39.34	44.51	1.00

(continued)

Table D-6b. Summary of Data for Emission Factor Development – Coke Calcining Controlled by Spray Dryer and Fabric Filter (continued)

Substance	CARB Rating	Emission Factor (lb/MMBtu)				Tests	RSD, %	Uncer-tainty, %	Detect Ratio
		Mean	Median	Maximum	Minimum				
Furan:5F 12378	A3-v0	4.42E-11	4.16E-11	5.87E-11	3.23E-11	1	30.36	34.35	0.65
Furan:5F 23478	A3-v0	4.09E-11	4.07E-11	5.66E-11	2.53E-11	1	38.39	43.44	0.63
Furan:5F Other	A3-v0	3.76E-10	3.89E-10	4.98E-10	2.42E-10	1	34.21	38.71	0.74
Furan:6F 123478	A3-v0	7.88E-11	7.53E-11	1.02E-10	5.88E-11	1	27.77	31.43	1.00
Furan:6F 123678	A3-v0	7.11E-11	8.68E-11	9.00E-11	3.65E-11	1	42.25	47.81	1.00
Furan:6F 123789	A3-v0	2.95E-11	3.32E-11	3.68E-11	1.84E-11	1	33.01	37.36	0.67
Furan:6F 234678	A3-v0	6.50E-11	5.68E-11	8.39E-11	5.43E-11	1	25.28	28.60	1.00
Furan:6F Other	A3-v0	4.81E-10	5.38E-10	6.54E-10	2.51E-10	1	43.15	48.82	1.00
Furan:7F 1234678	A3-v0	4.75E-10	4.90E-10	5.42E-10	3.94E-10	1	15.81	17.89	1.00
Furan:7F 1234789	A3-v0	8.04E-11	8.31E-11	8.70E-11	7.12E-11	1	10.23	11.58	0.72
Furan:7F Other	A3-v0	1.77E-10	1.77E-10	2.12E-10	1.43E-10	1	27.28	37.81	0.50
Furan:8F	A3-v1	4.13E-10	3.77E-10	7.94E-10	6.63E-11	1	88.52	100.16	1.00
Indeno(1,2,3-cd)pyrene	A3-v0	2.41E-08	2.42E-08	2.72E-08	2.08E-08	1	13.35	15.10	0.00
Lead	C3-v0	1.91E-04	1.56E-04	2.74E-04	1.42E-04	1	37.94	42.93	0.50
Manganese	C3-v0	1.44E-04	1.42E-04	2.42E-04	4.81E-05	1	67.22	76.06	0.88
Mercury	C3-v1	1.48E-04	4.81E-05	3.60E-04	3.43E-05	1	124.89	141.33	1.00
Naphthalene	A3-v0	7.29E-06	6.67E-06	1.04E-05	4.83E-06	1	38.67	43.75	1.00
Nickel	C3-v0	2.87E-04	1.56E-04	5.68E-04	1.37E-04	1	84.93	96.10	0.65
Phenanthrene	A3-v0	5.66E-07	5.31E-07	7.09E-07	4.58E-07	1	22.80	25.80	1.00
Phosphorus	C3-v0	1.45E-03	1.42E-03	1.56E-03	1.37E-03	1	6.73	7.62	0.00
Pyrene	A3-v0	7.86E-08	7.75E-08	8.76E-08	7.09E-08	1	10.68	12.09	1.00
Selenium	C3-v0	1.45E-05	1.42E-05	1.56E-05	1.37E-05	1	6.73	7.62	0.00
Silver	C3-v0	5.07E-05	4.97E-05	5.45E-05	4.81E-05	1	6.52	7.37	0.00
Thallium	C3-v0	2.18E-04	2.14E-04	2.34E-04	2.06E-04	1	6.65	7.53	0.00
Toluene	C3-v0	1.63E-04	1.44E-04	2.45E-04	9.97E-05	1	45.82	51.85	1.00
Xylene (m,p)	C3-v0	8.90E-05	8.62E-05	1.11E-04	6.99E-05	1	23.14	26.18	0.22
Xylene (o)	C3-v0	1.32E-04	1.40E-04	1.48E-04	1.09E-04	1	15.78	17.86	0.00
Zinc	C3-v0	3.66E-04	3.08E-04	5.25E-04	2.65E-04	1	38.08	43.10	1.00

Table D-7a. Summary of Data for Emission Factor Development – Heaters Firing Natural Gas

Substance	CARB Rating	Emission Factor (lb/MMcf)				Tests	RSD, %	Uncer-tainty, %	Detect Ratio
		Mean	Median	Maximum	Minimum				
Acenaphthene	A3-v0	1.39E-06	1.40E-06	1.62E-06	1.15E-06	1	16.72	18.92	0.72
Acenaphthylene	A3-v1	1.21E-05	2.84E-06	3.23E-05	1.15E-06	1	144.82	163.88	0.97
Acetaldehyde	A3-v0	4.61E-03	4.61E-03	4.82E-03	4.41E-03	1	4.47	5.06	0.32
Acrolein	A3-v0	4.51E-03	4.56E-03	4.64E-03	4.32E-03	1	3.66	4.14	0.00
Anthracene	A3-v0	1.61E-06	1.83E-06	1.85E-06	1.15E-06	1	24.62	27.86	0.76
Benzene	A3-v0	2.34E-03	1.65E-03	3.71E-03	1.65E-03	1	50.72	57.40	0.53
Benzo(a)anthracene	A3-v0	1.41E-06	1.18E-06	1.90E-06	1.15E-06	1	29.86	33.79	0.45
Benzo(a)pyrene	A3-v0	1.14E-06	1.15E-06	1.18E-06	1.08E-06	1	4.76	5.39	0.00
Benzo(b)fluoranthene	A3-v0	1.14E-06	1.15E-06	1.18E-06	1.08E-06	1	4.76	5.39	0.00
Benzo(g,h,i)perylene	A3-v0	1.25E-06	1.18E-06	1.42E-06	1.15E-06	1	11.81	13.36	0.38
Benzo(k)fluoranthene	A3-v0	1.14E-06	1.15E-06	1.18E-06	1.08E-06	1	4.76	5.39	0.00
Chrysene	A3-v0	1.39E-06	1.18E-06	1.83E-06	1.15E-06	1	27.63	31.27	0.44
Dibenz(a,h)anthracene	A3-v0	1.14E-06	1.15E-06	1.18E-06	1.08E-06	1	4.76	5.39	0.00
Ethylbenzene	A3-v0	2.25E-03	2.25E-03	2.25E-03	2.25E-03	1	0.00	0.00	0.00
Fluoranthene	A3-v0	1.19E-05	1.07E-05	1.79E-05	7.15E-06	1	46.07	52.14	1.00
Fluorene	A3-v0	4.59E-06	4.50E-06	5.82E-06	3.46E-06	1	25.79	29.19	1.00
Formaldehyde	A3-v0	4.75E-03	4.61E-03	5.32E-03	4.32E-03	1	10.76	12.18	0.37
Indeno(1,2,3-cd)pyrene	A3-v0	1.14E-06	1.15E-06	1.18E-06	1.08E-06	1	4.76	5.39	0.00
Naphthalene	A3-v0	2.37E-04	2.37E-04	2.80E-04	1.94E-04	1	18.28	20.69	1.00
Phenanthrene	A3-v0	3.37E-05	3.31E-05	4.74E-05	2.05E-05	1	39.96	45.22	1.00
Propylene	A3-v0	4.63E-01	4.57E-01	6.13E-01	3.20E-01	1	31.59	35.74	1.00
Pyrene	A3-v0	5.60E-06	2.84E-06	1.16E-05	2.31E-06	1	93.70	106.03	1.00
Toluene	A3-v0	3.23E-02	1.38E-02	7.47E-02	8.37E-03	1	114.08	129.09	1.00
Xylene (Total)	A3-v0	1.87E-02	2.05E-02	2.97E-02	5.71E-03	1	64.92	73.46	1.00

Table D-7b. Summary of Data for Emission Factor Development – Heaters Firing Natural Gas

Substance	CARB Rating	Emission Factor (lb/MMBtu)				Tests	RSD, %	Uncer-tainty, %	Detect Ratio
		Mean	Median	Maximum	Minimum				
Acenaphthene	A3-v0	1.36E-09	1.36E-09	1.58E-09	1.13E-09	1	16.72	18.92	0.72
Acenaphthylene	A3-v1	1.18E-08	2.77E-09	3.16E-08	1.13E-09	1	144.82	163.88	0.97
Acetaldehyde	A3-v0	4.50E-06	4.50E-06	4.71E-06	4.30E-06	1	4.47	5.06	0.32
Acrolein	A3-v0	4.40E-06	4.46E-06	4.53E-06	4.22E-06	1	3.66	4.14	0.00
Anthracene	A3-v0	1.57E-09	1.79E-09	1.80E-09	1.13E-09	1	24.62	27.86	0.76
Benzene	A3-v0	2.28E-06	1.61E-06	3.62E-06	1.61E-06	1	50.72	57.40	0.53
Benzo(a)anthracene	A3-v0	1.38E-09	1.16E-09	1.85E-09	1.13E-09	1	29.86	33.79	0.45
Benzo(a)pyrene	A3-v0	1.11E-09	1.13E-09	1.16E-09	1.05E-09	1	4.76	5.39	0.00
Benzo(b)fluoranthene	A3-v0	1.11E-09	1.13E-09	1.16E-09	1.05E-09	1	4.76	5.39	0.00
Benzo(g,h,i)perylene	A3-v0	1.22E-09	1.16E-09	1.39E-09	1.13E-09	1	11.81	13.36	0.38
Benzo(k)fluoranthene	A3-v0	1.11E-09	1.13E-09	1.16E-09	1.05E-09	1	4.76	5.39	0.00
Chrysene	A3-v0	1.36E-09	1.16E-09	1.79E-09	1.13E-09	1	27.63	31.27	0.44
Dibenz(a,h)anthracene	A3-v0	1.11E-09	1.13E-09	1.16E-09	1.05E-09	1	4.76	5.39	0.00
Ethylbenzene	A3-v0	2.20E-06	2.20E-06	2.20E-06	2.20E-06	1	0.00	0.00	0.00
Fluoranthene	A3-v0	1.16E-08	1.04E-08	1.75E-08	6.98E-09	1	46.07	52.14	1.00
Fluorene	A3-v0	4.49E-09	4.39E-09	5.69E-09	3.38E-09	1	25.79	29.19	1.00
Formaldehyde	A3-v0	4.64E-06	4.50E-06	5.19E-06	4.22E-06	1	10.76	12.18	0.37
Indeno(1,2,3-cd)pyrene	A3-v0	1.11E-09	1.13E-09	1.16E-09	1.05E-09	1	4.76	5.39	0.00
Naphthalene	A3-v0	2.31E-07	2.31E-07	2.74E-07	1.89E-07	1	18.28	20.69	1.00
Phenanthrene	A3-v0	3.29E-08	3.24E-08	4.63E-08	2.00E-08	1	39.96	45.22	1.00
Propylene	A3-v0	4.53E-04	4.47E-04	5.98E-04	3.13E-04	1	31.59	35.74	1.00
Pyrene	A3-v0	5.47E-09	2.77E-09	1.14E-08	2.25E-09	1	93.70	106.03	1.00
Toluene	A3-v0	3.15E-05	1.35E-05	7.29E-05	8.17E-06	1	114.08	129.09	1.00
Xylene (Total)	A3-v0	1.82E-05	2.01E-05	2.90E-05	5.58E-06	1	64.92	73.46	1.00

Table D-8a. Summary of Data for Emission Factor Development – Heaters Firing Natural Gas and Refinery Fuel Gas

Substance	CARB Rating	Emission Factor (lb/MMcf)				Tests	RSD, %	Uncer-tainty, %	Detect Ratio
		Mean	Median	Maximum	Minimum				
Acenaphthene	A3-v0	7.53E-06	2.44E-06	1.81E-05	2.05E-06	1	121.63	137.64	1.00
Acenaphthylene	A3-v1	5.88E-05	2.32E-06	1.72E-04	2.11E-06	1	166.69	188.62	1.00
Acetaldehyde	C3-v0	1.47E-02	1.43E-02	1.67E-02	1.30E-02	1	12.83	14.52	1.00
Acrolein	C3-v0	2.29E-03	2.10E-03	2.84E-03	1.93E-03	1	21.23	24.03	0.00
Anthracene	A3-v0	1.04E-05	8.97E-06	1.43E-05	7.89E-06	1	33.12	37.48	1.00
Benzene	A3-v0	2.12E-02	1.99E-02	2.44E-02	1.94E-02	1	13.02	14.73	0.00
Benzo(a)anthracene	A3-v0	9.57E-06	7.66E-06	1.67E-05	4.34E-06	1	66.91	75.72	1.00
Benzo(a)pyrene	A3-v1	6.07E-06	6.67E-06	1.10E-05	5.25E-07	1	86.79	98.21	0.97
Benzo(b)fluoranthene	A3-v0	2.63E-06	1.91E-06	4.19E-06	1.79E-06	1	51.36	58.12	1.00
Benzo(g,h,i)perylene	A3-v0	4.13E-07	1.59E-07	9.55E-07	1.25E-07	1	113.74	128.71	0.77
Benzo(k)fluoranthene	A3-v0	1.46E-06	8.35E-07	3.18E-06	3.70E-07	1	103.06	116.62	0.92
Chrysene	A3-v0	7.91E-07	6.38E-07	1.24E-06	4.91E-07	1	50.32	56.94	0.52
Dibenz(a,h)anthracene	A3-v0	1.38E-07	1.07E-07	2.08E-07	1.01E-07	1	43.36	49.06	0.00
Fluoranthene	A3-v0	1.80E-05	1.03E-05	3.82E-05	5.49E-06	1	98.02	110.92	1.00
Fluorene	A3-v1	6.48E-04	1.50E-04	1.69E-03	1.01E-04	1	139.64	158.01	1.00
Formaldehyde	C3-v0	4.33E-02	2.38E-02	8.89E-02	1.73E-02	1	91.33	103.35	1.00
Indeno(1,2,3-cd)pyrene	A3-v0	4.56E-07	4.04E-07	6.67E-07	2.96E-07	1	41.87	47.38	0.49
Naphthalene	A3-v1	2.31E-03	4.04E-04	6.18E-03	3.45E-04	1	145.12	164.21	1.00
Phenanthrene	A3-v0	2.06E-04	1.06E-04	4.30E-04	8.36E-05	1	93.74	106.07	1.00
Phenol	A3-v0	1.72E-03	1.82E-03	2.08E-03	1.26E-03	1	24.34	27.54	1.00
Propylene	A3-v0	1.20E-02	1.13E-02	1.38E-02	1.10E-02	1	13.02	14.73	0.00
Pyrene	A3-v0	1.25E-05	7.14E-06	2.62E-05	4.04E-06	1	96.40	109.08	1.00
Toluene	A3-v0	2.63E-02	2.46E-02	3.03E-02	2.41E-02	1	13.02	14.73	0.00
Xylene (Total)	A3-v0	3.03E-02	2.84E-02	3.49E-02	2.77E-02	1	13.02	14.73	0.00

Table D-8b. Summary of Data for Emission Factor Development – Heaters Firing Natural Gas and Refinery Fuel Gas

Substance	CARB Rating	Emission Factor (lb/MMBtu)				Tests	RSD, %	Uncer-tainty, %	Detect Ratio
		Mean	Median	Maximum	Minimum				
Acenaphthene	A3-v0	4.05E-09	1.38E-09	9.73E-09	1.05E-09	1	121.25	137.21	1.00
Acenaphthylene	A3-v1	3.16E-08	1.31E-09	9.23E-08	1.08E-09	1	166.64	188.56	1.00
Acetaldehyde	C3-v0	7.02E-06	6.94E-06	7.52E-06	6.59E-06	1	6.67	7.55	1.00
Acrolein	C3-v0	1.08E-06	1.10E-06	1.12E-06	1.03E-06	1	4.51	5.11	0.00
Anthracene	A3-v0	5.59E-09	4.60E-09	7.69E-09	4.48E-09	1	32.56	36.85	1.00
Benzene	A3-v0	1.01E-05	1.02E-05	1.06E-05	9.61E-06	1	4.81	5.44	0.00
Benzo(a)anthracene	A3-v0	5.18E-09	4.34E-09	8.97E-09	2.23E-09	1	66.60	75.36	1.00
Benzo(a)pyrene	A3-v1	3.24E-09	3.78E-09	5.65E-09	2.82E-10	1	84.14	95.21	0.97
Benzo(b)fluoranthene	A3-v0	1.44E-09	1.03E-09	2.38E-09	9.21E-10	1	56.34	63.75	1.00
Benzo(g,h,i)perylene	A3-v0	2.22E-10	8.16E-11	5.13E-10	7.08E-11	1	113.71	128.67	0.77
Benzo(k)fluoranthene	A3-v0	7.64E-10	4.49E-10	1.63E-09	2.10E-10	1	99.78	112.91	0.92
Chrysene	A3-v0	4.27E-10	3.62E-10	6.67E-10	2.52E-10	1	50.33	56.95	0.52
Dibenz(a,h)anthracene	A3-v0	7.45E-11	5.73E-11	1.12E-10	5.48E-11	1	43.05	48.72	0.00
Fluoranthene	A3-v0	9.73E-09	5.86E-09	2.05E-08	2.82E-09	1	97.23	110.02	1.00
Fluorene	A3-v1	3.49E-07	8.52E-08	9.09E-07	5.20E-08	1	139.21	157.53	1.00
Formaldehyde	C3-v0	2.19E-05	9.37E-06	4.74E-05	9.10E-06	1	100.34	113.54	1.00
Indeno(1,2,3-cd)pyrene	A3-v0	2.45E-10	2.08E-10	3.58E-10	1.68E-10	1	41.08	46.49	0.49
Naphthalene	A3-v1	1.24E-06	2.08E-07	3.32E-06	1.96E-07	1	145.06	164.15	1.00
Phenanthrene	A3-v0	1.11E-07	6.02E-08	2.31E-07	4.29E-08	1	93.26	105.53	1.00
Phenol	A3-v0	9.22E-07	9.35E-07	1.12E-06	7.14E-07	1	21.82	24.69	1.00
Propylene	A3-v0	5.75E-06	5.78E-06	6.01E-06	5.46E-06	1	4.81	5.44	0.00
Pyrene	A3-v0	6.74E-09	4.05E-09	1.41E-08	2.08E-09	1	95.66	108.24	1.00
Toluene	A3-v0	1.26E-05	1.26E-05	1.31E-05	1.19E-05	1	4.81	5.44	0.00
Xylene (Total)	A3-v0	1.45E-05	1.46E-05	1.51E-05	1.38E-05	1	4.81	5.44	0.00

Table D-9a. Summary of Data for Emission Factor Development – Heaters Firing Fuel Oil

Substance	CARB Rating	Emission Factor (lb/Mgal)				Tests	RSD, %	Uncer-tainty, %	Detect Ratio
		Mean	Median	Maximum	Minimum				
Acenaphthene	C3-v1	1.75E-06	2.20E-06	2.99E-06	6.81E-08	1	86.27	97.62	1.00
Acenaphthylene	C3-v0	8.02E-08	5.33E-08	1.37E-07	5.03E-08	1	61.23	69.29	1.00
Acetaldehyde	C3-v0	5.43E-04	5.44E-04	5.48E-04	5.38E-04	1	0.98	1.11	0.00
Acrolein	C3-v0	5.98E-04	5.99E-04	6.03E-04	5.91E-04	1	0.95	1.07	0.00
Anthracene	C3-v0	6.62E-08	6.81E-08	7.41E-08	5.65E-08	1	13.48	15.25	1.00
Arsenic	D3-v0	8.34E-04	8.28E-04	8.62E-04	8.13E-04	1	3.01	3.41	0.00
Benzene	A3-v0	8.47E-03	8.49E-03	8.74E-03	8.19E-03	1	3.22	3.65	0.00
Benzo(a)anthracene	C3-v1	3.84E-06	2.05E-07	1.12E-05	1.33E-07	1	165.56	187.35	1.00
Benzo(a)pyrene	C3-v0	9.80E-08	8.63E-08	1.84E-07	2.40E-08	1	82.16	92.97	1.00
Benzo(b)fluoranthene	C3-v0	7.95E-07	6.37E-07	1.15E-06	5.98E-07	1	38.74	43.84	1.00
Benzo(e)pyrene	C3-v0	5.54E-07	5.30E-07	7.73E-07	3.60E-07	1	37.44	42.36	1.00
Benzo(g,h,i)perylene	C3-v1	2.12E-06	5.50E-07	5.57E-06	2.55E-07	1	140.55	159.04	1.00
Benzo(k)fluoranthene	C3-v0	3.36E-08	2.08E-08	6.81E-08	1.18E-08	1	90.02	101.86	1.00
Beryllium	D3-v0	7.78E-05	7.64E-05	8.66E-05	7.04E-05	1	10.51	11.89	0.00
1,3-Butadiene	A3-v0	1.95E-02	1.96E-02	2.01E-02	1.89E-02	1	3.14	3.55	0.00
Chloroform	A3-v0	8.63E-03	8.65E-03	8.88E-03	8.35E-03	1	3.06	3.46	0.00
2-Chloronaphthalene	C3-v2	1.17E-05	5.33E-08	3.50E-05	3.57E-08	1	172.55	195.25	1.00
Chromium (Total)	A3-v0	2.54E-03	2.66E-03	2.74E-03	2.22E-03	1	11.14	12.60	1.00
Chrysene	C3-v1	1.12E-05	2.80E-06	2.92E-05	1.54E-06	1	139.73	158.12	1.00
Copper	D3-v0	2.62E-03	1.64E-03	4.58E-03	1.63E-03	1	64.94	73.48	1.00
Dibenz(a,h)anthracene	C3-v1	1.76E-06	1.18E-07	5.09E-06	6.54E-08	1	164.18	185.78	1.00
Dioxin:4D 2378	C3-v0	4.96E-10	5.94E-10	5.97E-10	2.97E-10	1	34.70	39.26	0.00
Dioxin:5D 12378	C3-v1	2.49E-09	5.94E-10	6.57E-09	2.97E-10	1	142.30	161.02	0.00
Dioxin:6D 123478	C3-v1	2.19E-09	5.94E-10	5.68E-09	2.97E-10	1	138.10	156.28	0.00
Dioxin:6D 123678	C3-v1	2.99E-09	5.94E-10	8.07E-09	2.97E-10	1	147.43	166.83	0.07
Dioxin:6D 123789	C3-v1	4.78E-09	5.94E-10	1.34E-08	2.97E-10	1	157.08	177.75	0.04
Dioxin:7D 1234678	C3-v1	1.33E-08	4.45E-09	3.29E-08	2.68E-09	1	127.05	143.76	1.00
Dioxin:8D	C3-v0	4.68E-08	5.64E-08	5.97E-08	2.41E-08	1	42.12	47.67	1.00
Fluoranthene	C3-v0	1.97E-06	2.28E-06	2.48E-06	1.13E-06	1	37.09	41.97	1.00
Fluorene	C3-v0	7.48E-05	3.25E-05	1.67E-04	2.52E-05	1	106.53	120.55	1.00
Formaldehyde	C3-v0	3.80E-03	3.81E-03	3.84E-03	3.77E-03	1	0.95	1.08	0.00
Furan:4F 2378	C3-v2	8.93E-08	1.48E-09	2.66E-07	5.95E-10	1	171.19	193.71	1.00
Furan:5F 12378	C3-v1	8.56E-09	5.94E-10	2.48E-08	2.97E-10	1	164.20	185.80	0.00
Furan:5F 23478	C3-v2	1.52E-08	5.94E-10	4.48E-08	2.97E-10	1	168.14	190.26	0.00
Furan:6F 123478	C3-v2	1.92E-08	5.94E-10	5.68E-08	1.49E-10	1	169.85	192.20	0.01
Furan:6F 123678	C3-v2	6.12E-09	2.97E-10	1.79E-08	1.49E-10	1	166.91	188.87	0.02
Furan:5F 23478	C3-v2	1.52E-08	5.94E-10	4.48E-08	2.97E-10	1	168.14	190.26	0.00
Furan:6F 123478	C3-v2	1.92E-08	5.94E-10	5.68E-08	1.49E-10	1	169.85	192.20	0.01

(continued)

Table D-9a. Summary of Data for Emission Factor Development – Heaters Firing Fuel Oil (continued)

Substance	CARB Rating	Emission Factor (lb/Mgal)				Tests	RSD, %	Uncer-tainty, %	Detect Ratio
		Mean	Median	Maximum	Minimum				
Furan:6F 123678	C3-v2	6.12E-09	2.97E-10	1.79E-08	1.49E-10	1	166.91	188.87	0.02
Furan:6F 123789	C3-v0	4.96E-10	5.94E-10	5.97E-10	2.97E-10	1	34.70	39.26	0.00
Furan:6F 234678	C3-v1	8.76E-09	8.91E-10	2.48E-08	5.95E-10	1	158.52	179.38	0.03
Furan:7F 1234678	C3-v1	1.95E-08	1.19E-09	5.68E-08	5.95E-10	1	165.30	187.05	1.00
Furan:7F 1234789	C3-v0	1.19E-09	5.94E-10	2.69E-09	2.97E-10	1	109.22	123.59	0.00
Furan:8F	C3-v1	1.04E-08	4.75E-09	2.54E-08	1.19E-09	1	125.10	141.57	1.00
Indeno(1,2,3-cd)pyrene	C3-v1	1.81E-06	1.55E-07	5.12E-06	1.48E-07	1	158.71	179.59	1.00
Lead	D3-v0	2.96E-04	1.79E-04	5.48E-04	1.62E-04	1	73.61	83.30	0.62
Manganese	D3-v0	1.89E-03	1.79E-03	2.22E-03	1.67E-03	1	15.12	17.11	0.39
Mercury	D3-v0	1.72E-05	1.29E-05	2.83E-05	1.04E-05	1	56.41	63.84	0.00
2-Methylnaphthalene	C3-v1	3.60E-05	1.06E-05	9.29E-05	4.54E-06	1	137.05	155.09	1.00
Naphthalene	C3-v0	8.46E-04	1.04E-03	1.11E-03	3.88E-04	1	47.07	53.26	1.00
Nickel	D3-v0	3.46E-01	3.47E-01	4.09E-01	2.81E-01	1	18.57	21.01	1.00
Perylene	C3-v0	7.41E-08	3.57E-08	1.66E-07	2.07E-08	1	107.75	121.93	1.00
Phenanthrene	C3-v1	2.49E-05	1.18E-05	6.02E-05	2.83E-06	1	123.75	140.04	1.00
Propylene	A3-v0	1.52E-02	1.52E-02	1.56E-02	1.47E-02	1	3.01	3.41	0.00
Pyrene	C3-v0	1.32E-06	1.19E-06	2.14E-06	6.28E-07	1	57.94	65.56	1.00
Selenium	D3-v0	4.63E-03	3.96E-03	6.59E-03	3.33E-03	1	37.32	42.23	0.00
Toluene	A3-v0	9.99E-03	1.00E-02	1.03E-02	9.67E-03	1	3.06	3.46	0.00
Xylene (Total)	A3-v0	1.92E-02	1.92E-02	1.98E-02	1.86E-02	1	3.21	3.63	0.00
Zinc	D3-v0	8.93E-03	8.35E-03	1.22E-02	6.27E-03	1	33.43	37.83	1.00

Table D-9b. Summary of Data for Emission Factor Development – Heaters Firing Fuel Oil

Substance	CARB Rating	Emission Factor (lb/MMBtu)				Tests	RSD, %	Uncer-tainty, %	Detect Ratio
		Mean	Median	Maximum	Minimum				
Acenaphthene	C3-v1	1.22E-08	1.53E-08	2.09E-08	4.76E-10	1	86.27	97.62	1.00
Acenaphthylene	C3-v0	5.59E-10	3.72E-10	9.55E-10	3.51E-10	1	61.23	69.29	1.00
Acetaldehyde	C3-v0	3.79E-06	3.80E-06	3.83E-06	3.75E-06	1	0.98	1.11	0.00
Acrolein	C3-v0	4.17E-06	4.18E-06	4.21E-06	4.13E-06	1	0.95	1.07	0.00
Anthracene	C3-v0	4.62E-10	4.75E-10	5.17E-10	3.94E-10	1	13.48	15.25	1.00
Arsenic	D3-v0	5.82E-06	5.78E-06	6.02E-06	5.67E-06	1	3.01	3.41	0.00
Benzene	A3-v0	5.91E-05	5.92E-05	6.10E-05	5.72E-05	1	3.22	3.65	0.00
Benzo(a)anthracene	C3-v1	2.68E-08	1.43E-09	7.79E-08	9.30E-10	1	165.56	187.35	1.00
Benzo(a)pyrene	C3-v0	6.84E-10	6.02E-10	1.28E-09	1.67E-10	1	82.16	92.97	1.00
Benzo(b)fluoranthene	C3-v0	5.55E-09	4.44E-09	8.02E-09	4.17E-09	1	38.74	43.84	1.00
Benzo(e)pyrene	C3-v0	3.87E-09	3.70E-09	5.39E-09	2.51E-09	1	37.44	42.36	1.00
Benzo(g,h,i)perylene	C3-v1	1.48E-08	3.84E-09	3.88E-08	1.78E-09	1	140.55	159.04	1.00
Benzo(k)fluoranthene	C3-v0	2.35E-10	1.45E-10	4.76E-10	8.27E-11	1	90.02	101.86	1.00
Beryllium	D3-v0	5.43E-07	5.33E-07	6.04E-07	4.92E-07	1	10.51	11.89	0.00
1,3-Butadiene	A3-v0	1.36E-04	1.37E-04	1.40E-04	1.32E-04	1	3.14	3.55	0.00
Cadmium	D3-v1	5.73E-06	8.28E-06	8.60E-06	2.99E-07	1	82.13	92.94	1.00
Chloroform	A3-v0	6.02E-05	6.03E-05	6.20E-05	5.83E-05	1	3.06	3.46	0.00
2-Chloronaphthalene	C3-v2	8.16E-08	3.72E-10	2.44E-07	2.49E-10	1	172.55	195.25	1.00
Chromium (Hex)	A3-v0	2.00E-06	2.14E-06	2.18E-06	1.67E-06	1	14.20	16.07	0.00
Chromium (Total)	A3-v0	1.77E-05	1.85E-05	1.91E-05	1.55E-05	1	11.14	12.60	1.00
Chrysene	C3-v1	7.81E-08	1.95E-08	2.04E-07	1.07E-08	1	139.73	158.12	1.00
Copper	D3-v0	1.83E-05	1.15E-05	3.20E-05	1.14E-05	1	64.94	73.48	1.00
Dibenz(a,h)anthracene	C3-v1	1.23E-08	8.23E-10	3.55E-08	4.57E-10	1	164.18	185.78	1.00
Dioxin:4D 2378	C3-v0	3.46E-12	4.15E-12	4.17E-12	2.08E-12	1	34.70	39.26	0.00
Dioxin:5D 12378	C3-v1	1.74E-11	4.15E-12	4.59E-11	2.08E-12	1	142.30	161.02	0.00
Dioxin:6D 123478	C3-v1	1.53E-11	4.15E-12	3.96E-11	2.08E-12	1	138.10	156.28	0.00
Dioxin:6D 123678	C3-v1	2.08E-11	4.15E-12	5.63E-11	2.08E-12	1	147.43	166.83	0.07
Dioxin:6D 123789	C3-v1	3.33E-11	4.15E-12	9.38E-11	2.08E-12	1	157.08	177.75	0.04
Dioxin:7D 1234678	C3-v1	9.30E-11	3.11E-11	2.29E-10	1.87E-11	1	127.05	143.76	1.00
Dioxin:8D	C3-v0	3.26E-10	3.94E-10	4.17E-10	1.68E-10	1	42.12	47.67	1.00
Fluoranthene	C3-v0	1.37E-08	1.59E-08	1.73E-08	7.89E-09	1	37.09	41.97	1.00
Fluorene	C3-v0	5.22E-07	2.26E-07	1.16E-06	1.76E-07	1	106.53	120.55	1.00
Formaldehyde	C3-v0	2.65E-05	2.66E-05	2.68E-05	2.63E-05	1	0.95	1.08	0.00
Furan:4F 2378	C3-v2	6.23E-10	1.04E-11	1.86E-09	4.15E-12	1	171.19	193.71	1.00
Furan:5F 12378	C3-v1	5.97E-11	4.15E-12	1.73E-10	2.08E-12	1	164.20	185.80	0.00
Furan:5F 23478	C3-v2	1.06E-10	4.15E-12	3.13E-10	2.08E-12	1	168.14	190.26	0.00
Furan:6F 123478	C3-v2	1.34E-10	4.15E-12	3.96E-10	1.04E-12	1	169.85	192.20	0.01
Furan:6F 123678	C3-v2	4.27E-11	2.07E-12	1.25E-10	1.04E-12	1	166.91	188.87	0.02

(continued)

Table D-9b. Summary of Data for Emission Factor Development – Heaters Firing Fuel Oil (continued)

Substance	CARB Rating	Emission Factor (lb/MMBtu)				Tests	RSD, %	Uncer-tainty, %	Detect Ratio
		Mean	Median	Maximum	Minimum				
Furan:6F 123789	C3-v0	3.46E-12	4.15E-12	4.17E-12	2.08E-12	1	34.70	39.26	0.00
Furan:6F 234678	C3-v1	6.11E-11	6.22E-12	1.73E-10	4.15E-12	1	158.52	179.38	0.03
Furan:7F 1234678	C3-v1	1.36E-10	8.29E-12	3.96E-10	4.15E-12	1	165.30	187.05	1.00
Furan:7F 1234789	C3-v0	8.33E-12	4.15E-12	1.88E-11	2.08E-12	1	109.22	123.59	0.00
Furan:8F	C3-v1	7.29E-11	3.32E-11	1.77E-10	8.30E-12	1	125.10	141.57	1.00
Indeno(1,2,3-cd)pyrene	C3-v1	1.26E-08	1.08E-09	3.58E-08	1.03E-09	1	158.71	179.59	1.00
Lead	D3-v0	2.07E-06	1.25E-06	3.83E-06	1.13E-06	1	73.61	83.30	0.62
Manganese	D3-v0	1.32E-05	1.25E-05	1.55E-05	1.17E-05	1	15.12	17.11	0.39
Mercury	D3-v0	1.20E-07	8.99E-08	1.98E-07	7.28E-08	1	56.41	63.84	0.00
2-Methylnaphthalene	C3-v1	2.51E-07	7.40E-08	6.49E-07	3.17E-08	1	137.05	155.09	1.00
Naphthalene	C3-v0	5.91E-06	7.28E-06	7.73E-06	2.71E-06	1	47.07	53.26	1.00
Nickel	D3-v0	2.41E-03	2.42E-03	2.86E-03	1.96E-03	1	18.57	21.01	1.00
Perylene	C3-v0	5.17E-10	2.49E-10	1.16E-09	1.45E-10	1	107.75	121.93	1.00
Phenanthrene	C3-v1	1.74E-07	8.23E-08	4.20E-07	1.98E-08	1	123.75	140.04	1.00
Propylene	A3-v0	1.06E-04	1.06E-04	1.09E-04	1.03E-04	1	3.01	3.41	0.00
Pyrene	C3-v0	9.22E-09	8.32E-09	1.49E-08	4.38E-09	1	57.94	65.56	1.00
Selenium	D3-v0	3.23E-05	2.77E-05	4.60E-05	2.33E-05	1	37.32	42.23	0.00
Toluene	A3-v0	6.97E-05	6.99E-05	7.18E-05	6.75E-05	1	3.06	3.46	0.00
Xylene (Total)	A3-v0	1.34E-04	1.34E-04	1.38E-04	1.29E-04	1	3.21	3.63	0.00
Zinc	D3-v0	6.23E-05	5.83E-05	8.49E-05	4.38E-05	1	33.43	37.83	1.00

Table D-10a. Summary of Data for Emission Factor Development – Heaters Firing Refinery Fuel Gas Controlled with Selective Non-Catalytic Reduction (NO_x)

Substance	CARB Rating	Emission Factor (lb/MMcf)				Tests	RSD, %	Uncer-tainty, %	Detect Ratio
		Mean	Median	Maximum	Minimum				
Acenaphthene	A2-v0	2.33E-06	1.46E-06	5.28E-06	1.11E-06	4	65.80	38.88	0.95
Acenaphthylene	A2-v0	1.52E-06	1.39E-06	2.64E-06	9.83E-07	4	38.62	22.82	0.51
Acetaldehyde	B1-v3	1.95E-02	1.08E-02	1.12E-01	1.10E-04	8	129.02	51.62	0.88
Anthracene	A2-v0	2.81E-06	2.40E-06	5.93E-06	1.01E-06	4	57.37	33.90	0.92
Antimony	C3-v0	5.81E-04	6.56E-04	8.51E-04	2.36E-04	1	54.13	61.25	1.00
Arsenic	C3-v0	9.54E-04	1.11E-03	1.43E-03	3.19E-04	1	60.10	68.00	1.00
Barium	C3-v0	6.49E-03	6.49E-03	6.64E-03	6.33E-03	1	2.45	2.78	0.00
Benzene	B1-v2	8.42E-02	6.76E-02	2.76E-01	2.35E-03	11	93.71	31.97	0.02
Benzo(a)anthracene	A1-v2	3.70E-05	7.11E-06	3.97E-04	1.00E-06	9	261.62	100.56	1.00
Benzo(a)pyrene	A1-v3	9.89E-05	2.20E-06	1.32E-03	9.83E-07	9	344.55	132.44	0.98
Benzo(b)fluoranthene	A1-v2	4.61E-05	4.20E-06	6.04E-04	9.83E-07	9	315.76	121.37	0.99
Benzo(g,h,i)perylene	A2-v0	1.17E-06	1.04E-06	1.41E-06	9.83E-07	4	16.09	9.51	0.00
Benzo(k)fluoranthene	A1-v2	2.72E-05	2.66E-06	3.40E-04	9.83E-07	9	309.39	118.92	0.96
Beryllium	C3-v0	2.88E-04	2.89E-04	2.95E-04	2.81E-04	1	2.45	2.78	0.00
Cadmium	C3-v0	1.11E-03	1.08E-03	1.33E-03	9.15E-04	1	18.76	21.23	1.00
Chromium (Hex)	C3-v0	2.43E-03	2.48E-03	2.51E-03	2.30E-03	1	4.62	5.23	0.00
Chromium (Total)	C3-v0	1.20E-03	7.38E-04	2.16E-03	7.03E-04	1	69.39	78.52	0.60
Chrysene	A2-v0	1.66E-06	1.29E-06	5.37E-06	9.83E-07	4	76.71	45.33	0.63
Copper	C3-v0	4.73E-03	2.16E-03	1.05E-02	1.48E-03	1	106.76	120.81	1.00
Dibenz(a,h)anthracene	A1-v2	1.06E-05	1.95E-06	1.31E-04	6.78E-07	9	262.22	100.79	0.00
Ethylbenzene	A2-v1	3.04E-02	1.74E-02	9.50E-02	2.53E-03	4	100.75	57.01	0.51
Fluoranthene	A2-v0	3.06E-06	3.03E-06	5.66E-06	1.72E-06	4	37.95	22.43	1.00
Fluorene	A2-v0	1.06E-05	8.55E-06	2.64E-05	3.33E-06	4	67.66	39.98	1.00
Formaldehyde	B1-v3	1.51E-01	3.03E-02	1.76E+00	7.92E-04	7	254.14	108.70	1.00
Hydrogen Sulfide	A1-v1	4.05E-01	3.27E-01	1.20E+00	1.82E-02	7	84.49	36.13	0.00
Indeno(1,2,3-cd)pyrene	A1-v3	1.15E-04	2.29E-06	1.55E-03	9.83E-07	9	342.12	131.50	0.99
Lead	C3-v0	5.49E-03	4.43E-03	8.43E-03	3.61E-03	1	47.03	53.22	1.00
Manganese	C3-v0	7.65E-03	7.03E-03	1.37E-02	2.21E-03	1	75.45	85.38	1.00
Mercury	C3-v0	2.02E-04	1.97E-04	2.17E-04	1.92E-04	1	6.49	7.34	0.36
Naphthalene	A2-v0	3.02E-04	2.43E-04	6.96E-04	1.33E-04	4	62.74	37.08	1.00
Nickel	C3-v1	1.06E-02	1.48E-03	2.88E-02	1.44E-03	1	149.30	168.95	0.95
Phenanthrene	A2-v0	1.44E-05	1.49E-05	2.17E-05	7.69E-06	4	32.45	19.18	1.00
Phenol	C1-v1	6.96E-03	4.70E-03	2.68E-02	2.93E-04	7	103.61	44.32	0.97
Phosphorus	C3-v0	7.21E-04	7.22E-04	7.38E-04	7.03E-04	1	2.45	2.78	0.00
Propylene	A2-v0	2.05E-03	2.14E-03	2.91E-03	1.00E-03	3	25.36	16.57	0.05
Pyrene	A2-v0	2.84E-06	2.63E-06	5.09E-06	1.78E-06	4	33.95	20.06	1.00
Selenium	C3-v0	2.20E-05	2.28E-05	2.85E-05	1.48E-05	1	31.23	35.34	0.78

(continued)

Table D-10a. Summary of Data for Emission Factor Development – Heaters Firing Refinery Fuel Gas Controlled with Selective Non-Catalytic Reduction (NO_x) (continued)

Substance	CARB Rating	Emission Factor (lb/MMcf)				Tests	RSD, %	Uncer-tainty, %	Detect Ratio
		Mean	Median	Maximum	Minimum				
Silver	C3-v1	1.81E-03	1.48E-03	3.61E-03	3.53E-04	1	91.23	103.24	0.94
Thallium	C3-v0	6.49E-03	6.49E-03	6.64E-03	6.33E-03	1	2.45	2.78	0.00
Toluene	D1-v2	1.37E-01	7.81E-02	1.21E+00	3.71E-03	11	154.31	52.65	0.55
Xylene (Total)	A2-v1	3.74E-02	3.37E-02	9.90E-02	4.27E-03	4	95.86	54.24	0.60
Zinc	C3-v0	2.34E-02	2.89E-02	3.18E-02	9.52E-03	1	51.72	58.53	1.00

Table D-10b. Summary of Data for Emission Factor Development – Heaters Firing Refinery Fuel Gas Controlled with Selective Non-Catalytic Reduction (NO_x)

Substance	CARB Rating	Emission Factor (lb/MMcf)				Tests	RSD, %	Uncer-tainty, %	Detect Ratio
		Mean	Median	Maximum	Minimum				
Acenaphthene	A2-v0	2.36E-09	1.55E-09	5.61E-09	1.20E-09	4	69.14	40.86	0.95
Acenaphthylene	A2-v0	1.55E-09	1.25E-09	2.74E-09	1.02E-09	4	41.70	24.64	0.51
Acetaldehyde	B1-v3	1.53E-05	8.12E-06	8.55E-05	8.41E-08	8	126.30	50.53	0.88
Anthracene	A2-v0	2.87E-09	2.30E-09	6.45E-09	1.09E-09	4	61.24	36.19	0.92
Antimony	C3-v0	5.17E-07	5.84E-07	7.58E-07	2.10E-07	1	54.13	61.25	1.00
Arsenic	C3-v0	8.50E-07	9.90E-07	1.28E-06	2.84E-07	1	60.10	68.00	1.00
Barium	C3-v0	5.78E-06	5.78E-06	5.92E-06	5.63E-06	1	2.45	2.78	0.00
Benzene	B1-v1	6.47E-05	5.49E-05	1.85E-04	2.54E-06	11	87.67	29.91	0.02
Benzo(a)anthracene	A1-v2	3.21E-08	5.40E-09	3.39E-07	1.05E-09	9	265.30	101.97	1.00
Benzo(a)pyrene	A1-v3	8.96E-08	1.73E-09	1.38E-06	1.02E-09	9	352.36	135.44	0.98
Benzo(b)fluoranthene	A1-v2	4.04E-08	3.31E-09	4.87E-07	1.02E-09	9	314.58	120.92	0.99
Benzo(g,h,i)perylene	A2-v0	1.17E-09	1.10E-09	1.40E-09	1.02E-09	4	11.55	6.82	0.00
Benzo(k)fluoranthene	A1-v2	2.41E-08	2.18E-09	2.96E-07	1.02E-09	9	310.01	119.16	0.96
Beryllium	C3-v0	2.57E-07	2.57E-07	2.63E-07	2.50E-07	1	2.45	2.78	0.00
Cadmium	C3-v0	9.88E-07	9.65E-07	1.18E-06	8.15E-07	1	18.76	21.23	1.00
Chromium (Hex)	C3-v0	2.17E-06	2.21E-06	2.24E-06	2.05E-06	1	4.62	5.23	0.00
Chromium (Total)	C3-v0	1.07E-06	6.57E-07	1.93E-06	6.26E-07	1	69.39	78.52	0.60
Chrysene	A2-v0	1.63E-09	1.23E-09	4.79E-09	1.02E-09	4	66.84	39.50	0.63
Copper	C3-v0	4.21E-06	1.93E-06	9.39E-06	1.31E-06	1	106.76	120.81	1.00
Dibenz(a,h)anthracene	A1-v2	1.02E-08	1.60E-09	1.37E-07	5.93E-10	9	279.09	107.28	0.00
Ethylbenzene	A2-v1	3.02E-05	1.79E-05	1.03E-04	2.72E-06	4	104.65	59.21	0.51
Fluoranthene	A2-v0	3.06E-09	3.14E-09	5.04E-09	1.85E-09	4	33.80	19.97	1.00
Fluorene	A2-v0	1.08E-08	8.77E-09	2.74E-08	2.96E-09	4	70.62	41.74	1.00
Formaldehyde	B1-v3	1.11E-04	1.90E-05	1.34E-03	7.67E-07	7	262.94	112.46	1.00
Hydrogen Sulfide	A1-v1	2.92E-04	2.46E-04	8.04E-04	1.76E-05	7	75.53	32.30	0.00
Indeno(1,2,3-cd)pyrene	A1-v3	1.03E-07	1.75E-09	1.42E-06	1.02E-09	9	343.01	131.85	0.99
Lead	C3-v0	4.89E-06	3.94E-06	7.51E-06	3.21E-06	1	47.03	53.22	1.00
Manganese	C3-v0	6.81E-06	6.26E-06	1.22E-05	1.97E-06	1	75.45	85.38	1.00
Mercury	C3-v0	1.80E-07	1.75E-07	1.93E-07	1.71E-07	1	6.49	7.34	0.36
Naphthalene	A2-v0	3.13E-07	2.61E-07	7.58E-07	1.19E-07	4	66.90	39.53	1.00
Nickel	C3-v1	9.42E-06	1.31E-06	2.57E-05	1.29E-06	1	149.30	168.95	0.95
Phenanthrene	A2-v0	1.46E-08	1.50E-08	2.25E-08	6.91E-09	4	32.60	19.27	1.00
Phenol	C1-v1	5.63E-06	3.14E-06	2.54E-05	2.84E-07	7	114.62	49.02	0.97
Phosphorus	C3-v0	6.42E-07	6.43E-07	6.57E-07	6.26E-07	1	2.45	2.78	0.00
Propylene	A2-v0	2.17E-06	2.22E-06	2.98E-06	1.08E-06	3	23.69	15.47	0.05
Pyrene	A2-v0	2.84E-09	2.72E-09	4.53E-09	1.87E-09	4	28.87	17.06	1.00
Selenium	C3-v0	1.96E-08	2.03E-08	2.54E-08	1.32E-08	1	31.23	35.34	0.78

(continued)

Table D-10b. Summary of Data for Emission Factor Development – Heaters Firing Refinery Fuel Gas Controlled with Selective Non-Catalytic Reduction (NO_x) (continued)

Substance	CARB Rating	Emission Factor (lb/MMcf)				Tests	RSD, %	Uncer-tainty, %	Detect Ratio
		Mean	Median	Maximum	Minimum				
Silver	C3-v1	1.61E-06	1.31E-06	3.21E-06	3.14E-07	1	91.23	103.24	0.94
Thallium	C3-v0	5.78E-06	5.78E-06	5.92E-06	5.63E-06	1	2.45	2.78	0.00
Toluene	D1-v2	1.07E-04	7.00E-05	9.19E-04	4.04E-06	11	148.57	50.69	0.55
Xylene (Total)	A2-v1	3.73E-05	3.16E-05	1.08E-04	4.66E-06	4	99.32	56.19	0.60
Zinc	C3-v0	2.08E-05	2.58E-05	2.83E-05	8.48E-06	1	51.72	58.53	1.00

Table D-11a. Summary of Data for Emission Factor Development – Heaters Firing Refinery Fuel Gas

Substance	CARB Rating	Emission Factor (lb/MMcf)				Tests	RSD, %	Uncer-tainty, %	Detect Ratio
		Mean	Median	Maximum	Minimum				
Acenaphthene	A2-v0	2.33E-06	1.46E-06	5.28E-06	1.11E-06	4	65.80	38.88	0.95
Acenaphthylene	A2-v0	1.52E-06	1.39E-06	2.64E-06	9.83E-07	4	38.62	22.82	0.51
Acetaldehyde	B1-v3	1.95E-02	1.08E-02	1.12E-01	1.10E-04	8	129.02	51.62	0.88
Anthracene	A2-v0	2.81E-06	2.40E-06	5.93E-06	1.01E-06	4	57.37	33.90	0.92
Antimony	C3-v0	5.81E-04	6.56E-04	8.51E-04	2.36E-04	1	54.13	61.25	1.00
Arsenic	C3-v0	9.54E-04	1.11E-03	1.43E-03	3.19E-04	1	60.10	68.00	1.00
Barium	C3-v0	6.49E-03	6.49E-03	6.64E-03	6.33E-03	1	2.45	2.78	0.00
Benzene	B1-v2	8.42E-02	6.76E-02	2.76E-01	2.35E-03	11	93.71	31.97	0.02
Benzo(a)anthracene	A1-v2	3.70E-05	7.11E-06	3.97E-04	1.00E-06	9	261.62	100.56	1.00
Benzo(a)pyrene	A1-v3	9.89E-05	2.20E-06	1.32E-03	9.83E-07	9	344.55	132.44	0.98
Benzo(b)fluoranthene	A1-v2	4.61E-05	4.20E-06	6.04E-04	9.83E-07	9	315.76	121.37	0.99
Benzo(g,h,i)perylene	A2-v0	1.17E-06	1.04E-06	1.41E-06	9.83E-07	4	16.09	9.51	0.00
Benzo(k)fluoranthene	A1-v2	2.72E-05	2.66E-06	3.40E-04	9.83E-07	9	309.39	118.92	0.96
Beryllium	C3-v0	2.88E-04	2.89E-04	2.95E-04	2.81E-04	1	2.45	2.78	0.00
Cadmium	C3-v0	1.11E-03	1.08E-03	1.33E-03	9.15E-04	1	18.76	21.23	1.00
Chromium (Hex)	C3-v0	2.43E-03	2.48E-03	2.51E-03	2.30E-03	1	4.62	5.23	0.00
Chromium (Total)	C3-v0	1.20E-03	7.38E-04	2.16E-03	7.03E-04	1	69.39	78.52	0.60
Chrysene	A2-v0	1.66E-06	1.29E-06	5.37E-06	9.83E-07	4	76.71	45.33	0.63
Copper	C3-v0	4.73E-03	2.16E-03	1.05E-02	1.48E-03	1	106.76	120.81	1.00
Dibenz(a,h)anthracene	A1-v2	1.06E-05	1.95E-06	1.31E-04	6.78E-07	9	262.22	100.79	0.00
Ethylbenzene	A2-v1	3.04E-02	1.74E-02	9.50E-02	2.53E-03	4	100.75	57.01	0.51
Fluoranthene	A2-v0	3.06E-06	3.03E-06	5.66E-06	1.72E-06	4	37.95	22.43	1.00
Fluorene	A2-v0	1.06E-05	8.55E-06	2.64E-05	3.33E-06	4	67.66	39.98	1.00
Formaldehyde	B1-v3	1.51E-01	3.03E-02	1.76E+00	7.92E-04	7	254.14	108.70	1.00
Hydrogen Sulfide	A1-v1	4.05E-01	3.27E-01	1.20E+00	1.82E-02	7	84.49	36.13	0.00
Indeno(1,2,3-cd)pyrene	A1-v3	1.15E-04	2.29E-06	1.55E-03	9.83E-07	9	342.12	131.50	0.99
Lead	C3-v0	5.49E-03	4.43E-03	8.43E-03	3.61E-03	1	47.03	53.22	1.00
Manganese	C3-v0	7.65E-03	7.03E-03	1.37E-02	2.21E-03	1	75.45	85.38	1.00
Mercury	C3-v0	2.02E-04	1.97E-04	2.17E-04	1.92E-04	1	6.49	7.34	0.36
Naphthalene	A2-v0	3.02E-04	2.43E-04	6.96E-04	1.33E-04	4	62.74	37.08	1.00
Nickel	C3-v1	1.06E-02	1.48E-03	2.88E-02	1.44E-03	1	149.30	168.95	0.95
Phenanthrene	A2-v0	1.44E-05	1.49E-05	2.17E-05	7.69E-06	4	32.45	19.18	1.00
Phenol	C1-v1	6.96E-03	4.70E-03	2.68E-02	2.93E-04	7	103.61	44.32	0.97
Phosphorus	C3-v0	7.21E-04	7.22E-04	7.38E-04	7.03E-04	1	2.45	2.78	0.00
Propylene	A2-v0	2.05E-03	2.14E-03	2.91E-03	1.00E-03	3	25.36	16.57	0.05
Pyrene	A2-v0	2.84E-06	2.63E-06	5.09E-06	1.78E-06	4	33.95	20.06	1.00
Selenium	C3-v0	2.20E-05	2.28E-05	2.85E-05	1.48E-05	1	31.23	35.34	0.78

(continued)

Table D-11a. Summary of Data for Emission Factor Development – Heaters Firing Refinery Fuel Gas (continued)

Substance	CARB Rating	Emission Factor (lb/MMcf)				Tests	RSD, %	Uncer-tainty, %	Detect Ratio
		Mean	Median	Maximum	Minimum				
Silver	C3-v1	1.81E-03	1.48E-03	3.61E-03	3.53E-04	1	91.23	103.24	0.94
Thallium	C3-v0	6.49E-03	6.49E-03	6.64E-03	6.33E-03	1	2.45	2.78	0.00
Toluene	D1-v2	1.37E-01	7.81E-02	1.21E+00	3.71E-03	11	154.31	52.65	0.55
Xylene (Total)	A2-v1	3.74E-02	3.37E-02	9.90E-02	4.27E-03	4	95.86	54.24	0.60
Zinc	C3-v0	2.34E-02	2.89E-02	3.18E-02	9.52E-03	1	51.72	58.53	1.00

Table D-11b. Summary of Data for Emission Factor Development – Heaters Firing Refinery Fuel Gas

Substance	CARB Rating	Emission Factor (lb/MMBtu)				Tests	RSD, %	Uncer-tainty, %	Detect Ratio
		Mean	Median	Maximum	Minimum				
Acenaphthene	A2-v0	2.36E-09	1.55E-09	5.61E-09	1.20E-09	4	69.14	40.86	0.95
Acenaphthylene	A2-v0	1.55E-09	1.25E-09	2.74E-09	1.02E-09	4	41.70	24.64	0.51
Acetaldehyde	B1-v3	1.53E-05	8.12E-06	8.55E-05	8.41E-08	8	126.30	50.53	0.88
Anthracene	A2-v0	2.87E-09	2.30E-09	6.45E-09	1.09E-09	4	61.24	36.19	0.92
Antimony	C3-v0	5.17E-07	5.84E-07	7.58E-07	2.10E-07	1	54.13	61.25	1.00
Arsenic	C3-v0	8.50E-07	9.90E-07	1.28E-06	2.84E-07	1	60.10	68.00	1.00
Barium	C3-v0	5.78E-06	5.78E-06	5.92E-06	5.63E-06	1	2.45	2.78	0.00
Benzene	B1-v1	6.47E-05	5.49E-05	1.85E-04	2.54E-06	11	87.67	29.91	0.02
Benzo(a)anthracene	A1-v2	3.21E-08	5.40E-09	3.39E-07	1.05E-09	9	265.30	101.97	1.00
Benzo(a)pyrene	A1-v3	8.96E-08	1.73E-09	1.38E-06	1.02E-09	9	352.36	135.44	0.98
Benzo(b)fluoranthene	A1-v2	4.04E-08	3.31E-09	4.87E-07	1.02E-09	9	314.58	120.92	0.99
Benzo(g,h,i)perylene	A2-v0	1.17E-09	1.10E-09	1.40E-09	1.02E-09	4	11.55	6.82	0.00
Benzo(k)fluoranthene	A1-v2	2.41E-08	2.18E-09	2.96E-07	1.02E-09	9	310.01	119.16	0.96
Beryllium	C3-v0	2.57E-07	2.57E-07	2.63E-07	2.50E-07	1	2.45	2.78	0.00
Cadmium	C3-v0	9.88E-07	9.65E-07	1.18E-06	8.15E-07	1	18.76	21.23	1.00
Chromium (Hex)	C3-v0	2.17E-06	2.21E-06	2.24E-06	2.05E-06	1	4.62	5.23	0.00
Chromium (Total)	C3-v0	1.07E-06	6.57E-07	1.93E-06	6.26E-07	1	69.39	78.52	0.60
Chrysene	A2-v0	1.63E-09	1.23E-09	4.79E-09	1.02E-09	4	66.84	39.50	0.63
Copper	C3-v0	4.21E-06	1.93E-06	9.39E-06	1.31E-06	1	106.76	120.81	1.00
Dibenz(a,h)anthracene	A1-v2	1.02E-08	1.60E-09	1.37E-07	5.93E-10	9	279.09	107.28	0.00
Ethylbenzene	A2-v1	3.02E-05	1.79E-05	1.03E-04	2.72E-06	4	104.65	59.21	0.51
Fluoranthene	A2-v0	3.06E-09	3.14E-09	5.04E-09	1.85E-09	4	33.80	19.97	1.00
Fluorene	A2-v0	1.08E-08	8.77E-09	2.74E-08	2.96E-09	4	70.62	41.74	1.00
Formaldehyde	B1-v3	1.11E-04	1.90E-05	1.34E-03	7.67E-07	7	262.94	112.46	1.00
Hydrogen Sulfide	A1-v1	2.92E-04	2.46E-04	8.04E-04	1.76E-05	7	75.53	32.30	0.00
Indeno(1,2,3-cd)pyrene	A1-v3	1.03E-07	1.75E-09	1.42E-06	1.02E-09	9	343.01	131.85	0.99
Lead	C3-v0	4.89E-06	3.94E-06	7.51E-06	3.21E-06	1	47.03	53.22	1.00
Manganese	C3-v0	6.81E-06	6.26E-06	1.22E-05	1.97E-06	1	75.45	85.38	1.00
Mercury	C3-v0	1.80E-07	1.75E-07	1.93E-07	1.71E-07	1	6.49	7.34	0.36
Naphthalene	A2-v0	3.13E-07	2.61E-07	7.58E-07	1.19E-07	4	66.90	39.53	1.00
Nickel	C3-v1	9.42E-06	1.31E-06	2.57E-05	1.29E-06	1	149.30	168.95	0.95
Phenanthrene	A2-v0	1.46E-08	1.50E-08	2.25E-08	6.91E-09	4	32.60	19.27	1.00
Phenol	C1-v1	5.63E-06	3.14E-06	2.54E-05	2.84E-07	7	114.62	49.02	0.97
Phosphorus	C3-v0	6.42E-07	6.43E-07	6.57E-07	6.26E-07	1	2.45	2.78	0.00
Propylene	A2-v0	2.17E-06	2.22E-06	2.98E-06	1.08E-06	3	23.69	15.47	0.05
Pyrene	A2-v0	2.84E-09	2.72E-09	4.53E-09	1.87E-09	4	28.87	17.06	1.00
Selenium	C3-v0	1.96E-08	2.03E-08	2.54E-08	1.32E-08	1	31.23	35.34	0.78

(continued)

Table D-11b. Summary of Data for Emission Factor Development – Heaters Firing Refinery Fuel Gas (continued)

Substance	CARB Rating	Emission Factor (lb/MMBtu)				Tests	RSD, %	Uncer-tainty, %	Detect Ratio
		Mean	Median	Maximum	Minimum				
Silver	C3-v1	1.61E-06	1.31E-06	3.21E-06	3.14E-07	1	91.23	103.24	0.94
Thallium	C3-v0	5.78E-06	5.78E-06	5.92E-06	5.63E-06	1	2.45	2.78	0.00
Toluene	D1-v2	1.07E-04	7.00E-05	9.19E-04	4.04E-06	11	148.57	50.69	0.55
Xylene (Total)	A2-v1	3.73E-05	3.16E-05	1.08E-04	4.66E-06	4	99.32	56.19	0.60
Zinc	C3-v0	2.08E-05	2.58E-05	2.83E-05	8.48E-06	1	51.72	58.53	1.00

Table D-12a. Summary of Data for Emission Factor Development – Heaters Firing Refinery Fuel Gas Controlled with Selective Catalytic Reduction

Substance	CARB Rating	Emission Factor (lb/MMcf)				Tests	RSD, %	Uncer-tainty, %	Detect Ratio
		Mean	Median	Maximum	Minimum				
Acenaphthene	A2-v0	2.33E-06	1.46E-06	5.28E-06	1.11E-06	4	65.80	38.88	0.95
Acenaphthylene	A2-v0	1.52E-06	1.39E-06	2.64E-06	9.83E-07	4	38.62	22.82	0.51
Acetaldehyde	B1-v3	1.95E-02	1.08E-02	1.12E-01	1.10E-04	8	129.02	51.62	0.88
Anthracene	A2-v0	2.81E-06	2.40E-06	5.93E-06	1.01E-06	4	57.37	33.90	0.92
Antimony	C3-v0	5.81E-04	6.56E-04	8.51E-04	2.36E-04	1	54.13	61.25	1.00
Arsenic	C3-v0	9.54E-04	1.11E-03	1.43E-03	3.19E-04	1	60.10	68.00	1.00
Barium	C3-v0	6.49E-03	6.49E-03	6.64E-03	6.33E-03	1	2.45	2.78	0.00
Benzene	B1-v2	8.42E-02	6.76E-02	2.76E-01	2.35E-03	11	93.71	31.97	0.02
Benzo(a)anthracene	A1-v2	3.70E-05	7.11E-06	3.97E-04	1.00E-06	9	261.62	100.56	1.00
Benzo(a)pyrene	A1-v3	9.89E-05	2.20E-06	1.32E-03	9.83E-07	9	344.55	132.44	0.98
Benzo(b)fluoranthene	A1-v2	4.61E-05	4.20E-06	6.04E-04	9.83E-07	9	315.76	121.37	0.99
Benzo(g,h,i)perylene	A2-v0	1.17E-06	1.04E-06	1.41E-06	9.83E-07	4	16.09	9.51	0.00
Benzo(k)fluoranthene	A1-v2	2.72E-05	2.66E-06	3.40E-04	9.83E-07	9	309.39	118.92	0.96
Beryllium	C3-v0	2.88E-04	2.89E-04	2.95E-04	2.81E-04	1	2.45	2.78	0.00
Cadmium	C3-v0	1.11E-03	1.08E-03	1.33E-03	9.15E-04	1	18.76	21.23	1.00
Chromium (Hex)	C3-v0	2.43E-03	2.48E-03	2.51E-03	2.30E-03	1	4.62	5.23	0.00
Chromium (Total)	C3-v0	1.20E-03	7.38E-04	2.16E-03	7.03E-04	1	69.39	78.52	0.60
Chrysene	A2-v0	1.66E-06	1.29E-06	5.37E-06	9.83E-07	4	76.71	45.33	0.63
Copper	C3-v0	4.73E-03	2.16E-03	1.05E-02	1.48E-03	1	106.76	120.81	1.00
Dibenz(a,h)anthracene	A1-v2	1.06E-05	1.95E-06	1.31E-04	6.78E-07	9	262.22	100.79	0.00
Ethylbenzene	A2-v1	3.04E-02	1.74E-02	9.50E-02	2.53E-03	4	100.75	57.01	0.51
Fluoranthene	A2-v0	3.06E-06	3.03E-06	5.66E-06	1.72E-06	4	37.95	22.43	1.00
Fluorene	A2-v0	1.06E-05	8.55E-06	2.64E-05	3.33E-06	4	67.66	39.98	1.00
Formaldehyde	B1-v3	1.51E-01	3.03E-02	1.76E+00	7.92E-04	7	254.14	108.70	1.00
Hydrogen Sulfide	A1-v1	4.05E-01	3.27E-01	1.20E+00	1.82E-02	7	84.49	36.13	0.00
Indeno(1,2,3-cd)pyrene	A1-v3	1.15E-04	2.29E-06	1.55E-03	9.83E-07	9	342.12	131.50	0.99
Lead	C3-v0	5.49E-03	4.43E-03	8.43E-03	3.61E-03	1	47.03	53.22	1.00
Manganese	C3-v0	7.65E-03	7.03E-03	1.37E-02	2.21E-03	1	75.45	85.38	1.00
Mercury	C3-v0	2.02E-04	1.97E-04	2.17E-04	1.92E-04	1	6.49	7.34	0.36
Naphthalene	A2-v0	3.02E-04	2.43E-04	6.96E-04	1.33E-04	4	62.74	37.08	1.00
Nickel	C3-v1	1.06E-02	1.48E-03	2.88E-02	1.44E-03	1	149.30	168.95	0.95
Phenanthrene	A2-v0	1.44E-05	1.49E-05	2.17E-05	7.69E-06	4	32.45	19.18	1.00
Phenol	C1-v1	6.96E-03	4.70E-03	2.68E-02	2.93E-04	7	103.61	44.32	0.97
Phosphorus	C3-v0	7.21E-04	7.22E-04	7.38E-04	7.03E-04	1	2.45	2.78	0.00
Propylene	A2-v0	2.05E-03	2.14E-03	2.91E-03	1.00E-03	3	25.36	16.57	0.05
Pyrene	A2-v0	2.84E-06	2.63E-06	5.09E-06	1.78E-06	4	33.95	20.06	1.00
Selenium	C3-v0	2.20E-05	2.28E-05	2.85E-05	1.48E-05	1	31.23	35.34	0.78

(continued)

Table D-12a. Summary of Data for Emission Factor Development – Heaters Firing Refinery Fuel Gas Controlled with Selective Catalytic Reduction (continued)

Substance	CARB Rating	Emission Factor (lb/MMcf)				Tests	RSD, %	Uncer-tainty, %	Detect Ratio
		Mean	Median	Maximum	Minimum				
Silver	C3-v1	1.81E-03	1.48E-03	3.61E-03	3.53E-04	1	91.23	103.24	0.94
Thallium	C3-v0	6.49E-03	6.49E-03	6.64E-03	6.33E-03	1	2.45	2.78	0.00
Toluene	D1-v2	1.37E-01	7.81E-02	1.21E+00	3.71E-03	11	154.31	52.65	0.55
Xylene (Total)	A2-v1	3.74E-02	3.37E-02	9.90E-02	4.27E-03	4	95.86	54.24	0.60
Zinc	C3-v0	2.34E-02	2.89E-02	3.18E-02	9.52E-03	1	51.72	58.53	1.00

Table D-12b. Summary of Data for Emission Factor Development – Heaters Firing Refinery Fuel Gas Controlled with Selective Catalytic Reduction

Substance	CARB Rating	Emission Factor (lb/MMBtu)				Tests	RSD, %	Uncer-tainty, %	Detect Ratio
		Mean	Median	Maximum	Minimum				
Acenaphthene	A2-v0	2.36E-09	1.55E-09	5.61E-09	1.20E-09	4	69.14	40.86	0.95
Acenaphthylene	A2-v0	1.55E-09	1.25E-09	2.74E-09	1.02E-09	4	41.70	24.64	0.51
Acetaldehyde	B1-v3	1.53E-05	8.12E-06	8.55E-05	8.41E-08	8	126.30	50.53	0.88
Anthracene	A2-v0	2.87E-09	2.30E-09	6.45E-09	1.09E-09	4	61.24	36.19	0.92
Antimony	C3-v0	5.17E-07	5.84E-07	7.58E-07	2.10E-07	1	54.13	61.25	1.00
Arsenic	C3-v0	8.50E-07	9.90E-07	1.28E-06	2.84E-07	1	60.10	68.00	1.00
Barium	C3-v0	5.78E-06	5.78E-06	5.92E-06	5.63E-06	1	2.45	2.78	0.00
Benzene	B1-v1	6.47E-05	5.49E-05	1.85E-04	2.54E-06	11	87.67	29.91	0.02
Benzo(a)anthracene	A1-v2	3.21E-08	5.40E-09	3.39E-07	1.05E-09	9	265.30	101.97	1.00
Benzo(a)pyrene	A1-v3	8.96E-08	1.73E-09	1.38E-06	1.02E-09	9	352.36	135.44	0.98
Benzo(b)fluoranthene	A1-v2	4.04E-08	3.31E-09	4.87E-07	1.02E-09	9	314.58	120.92	0.99
Benzo(g,h,i)perylene	A2-v0	1.17E-09	1.10E-09	1.40E-09	1.02E-09	4	11.55	6.82	0.00
Benzo(k)fluoranthene	A1-v2	2.41E-08	2.18E-09	2.96E-07	1.02E-09	9	310.01	119.16	0.96
Beryllium	C3-v0	2.57E-07	2.57E-07	2.63E-07	2.50E-07	1	2.45	2.78	0.00
Cadmium	C3-v0	9.88E-07	9.65E-07	1.18E-06	8.15E-07	1	18.76	21.23	1.00
Chromium (Hex)	C3-v0	2.17E-06	2.21E-06	2.24E-06	2.05E-06	1	4.62	5.23	0.00
Chromium (Total)	C3-v0	1.07E-06	6.57E-07	1.93E-06	6.26E-07	1	69.39	78.52	0.60
Chrysene	A2-v0	1.63E-09	1.23E-09	4.79E-09	1.02E-09	4	66.84	39.50	0.63
Copper	C3-v0	4.21E-06	1.93E-06	9.39E-06	1.31E-06	1	106.76	120.81	1.00
Dibenz(a,h)anthracene	A1-v2	1.02E-08	1.60E-09	1.37E-07	5.93E-10	9	279.09	107.28	0.00
Ethylbenzene	A2-v1	3.02E-05	1.79E-05	1.03E-04	2.72E-06	4	104.65	59.21	0.51
Fluoranthene	A2-v0	3.06E-09	3.14E-09	5.04E-09	1.85E-09	4	33.80	19.97	1.00
Fluorene	A2-v0	1.08E-08	8.77E-09	2.74E-08	2.96E-09	4	70.62	41.74	1.00
Formaldehyde	B1-v3	1.11E-04	1.90E-05	1.34E-03	7.67E-07	7	262.94	112.46	1.00
Hydrogen Sulfide	A1-v1	2.92E-04	2.46E-04	8.04E-04	1.76E-05	7	75.53	32.30	0.00
Indeno(1,2,3-cd)pyrene	A1-v3	1.03E-07	1.75E-09	1.42E-06	1.02E-09	9	343.01	131.85	0.99
Lead	C3-v0	4.89E-06	3.94E-06	7.51E-06	3.21E-06	1	47.03	53.22	1.00
Manganese	C3-v0	6.81E-06	6.26E-06	1.22E-05	1.97E-06	1	75.45	85.38	1.00
Mercury	C3-v0	1.80E-07	1.75E-07	1.93E-07	1.71E-07	1	6.49	7.34	0.36
Naphthalene	A2-v0	3.13E-07	2.61E-07	7.58E-07	1.19E-07	4	66.90	39.53	1.00
Nickel	C3-v1	9.42E-06	1.31E-06	2.57E-05	1.29E-06	1	149.30	168.95	0.95
Phenanthrene	A2-v0	1.46E-08	1.50E-08	2.25E-08	6.91E-09	4	32.60	19.27	1.00
Phenol	C1-v1	5.63E-06	3.14E-06	2.54E-05	2.84E-07	7	114.62	49.02	0.97
Phosphorus	C3-v0	6.42E-07	6.43E-07	6.57E-07	6.26E-07	1	2.45	2.78	0.00
Propylene	A2-v0	2.17E-06	2.22E-06	2.98E-06	1.08E-06	3	23.69	15.47	0.05
Pyrene	A2-v0	2.84E-09	2.72E-09	4.53E-09	1.87E-09	4	28.87	17.06	1.00

(continued)

Table D-12b. Summary of Data for Emission Factor Development – Heaters Firing Refinery Fuel Gas Controlled with Selective Catalytic Reduction (continued)

Substance	CARB Rating	Emission Factor (lb/MMBtu)				Tests	RSD, %	Uncer-tainty, %	Detect Ratio
		Mean	Median	Maximum	Minimum				
Selenium	C3-v0	1.96E-08	2.03E-08	2.54E-08	1.32E-08	1	31.23	35.34	0.78
Silver	C3-v1	1.61E-06	1.31E-06	3.21E-06	3.14E-07	1	91.23	103.24	0.94
Thallium	C3-v0	5.78E-06	5.78E-06	5.92E-06	5.63E-06	1	2.45	2.78	0.00
Toluene	D1-v2	1.07E-04	7.00E-05	9.19E-04	4.04E-06	11	148.57	50.69	0.55
Xylene (Total)	A2-v1	3.73E-05	3.16E-05	1.08E-04	4.66E-06	4	99.32	56.19	0.60
Zinc	C3-v0	2.08E-05	2.58E-05	2.83E-05	8.48E-06	1	51.72	58.53	1.00

Table D-13a. Summary of Data for Emission Factor Development – Internal Combustion Engines Firing Diesel Fuel, O_2 < 13%

Substance	CARB Rating	Emission Factor (lb/Mgal)				Tests	RSD, %	Uncer-tainty, %	Detect Ratio
		Mean	Median	Maximum	Minimum				
Acenaphthene	C3-v0	6.44E-04	6.87E-04	8.67E-04	3.78E-04	1	38.39	43.44	1.00
Acenaphthylene	C3-v0	1.27E-03	1.31E-03	1.32E-03	1.18E-03	1	6.10	6.91	1.00
Acetaldehyde	A3-v0	3.47E-03	2.25E-03	6.46E-03	1.69E-03	1	75.34	85.25	1.00
Acrolein	A3-v0	1.07E-03	7.15E-04	1.79E-03	7.15E-04	1	57.74	65.33	0.56
Anthracene	C3-v0	1.70E-04	1.34E-04	2.89E-04	8.61E-05	1	62.56	70.79	1.00
Benzene	A3-v0	1.01E-01	9.93E-02	1.04E-01	9.93E-02	1	2.71	3.06	1.00
Benzo(a)anthracene	C3-v0	8.71E-05	8.30E-05	9.69E-05	8.15E-05	1	9.72	11.00	1.00
Benzo(a)pyrene	C3-v0	3.54E-05	3.84E-05	4.77E-05	2.00E-05	1	39.85	45.09	0.45
Benzo(b)fluoranthene	C3-v0	1.53E-04	1.41E-04	1.92E-04	1.26E-04	1	22.58	25.55	0.27
Benzo(g,h,i)perylene	C3-v0	7.69E-05	7.84E-05	8.30E-05	6.92E-05	1	9.17	10.37	1.00
Benzo(k)fluoranthene	C3-v0	3.02E-05	1.23E-05	6.92E-05	9.22E-06	1	111.67	126.37	0.76
Chrysene	C3-v0	2.11E-04	2.21E-04	2.28E-04	1.84E-04	1	11.03	12.48	1.00
Dibenz(a,h)anthracene	C3-v0	4.77E-05	4.61E-05	5.07E-05	4.61E-05	1	5.59	6.32	0.00
Fluoranthene	C3-v0	5.56E-04	5.47E-04	5.84E-04	5.37E-04	1	4.50	5.09	1.00
Fluorene	C3-v0	1.77E-03	1.76E-03	1.81E-03	1.72E-03	1	2.62	2.96	1.00
Formaldehyde	A3-v1	1.09E-02	4.64E-03	2.63E-02	1.74E-03	1	123.19	139.41	1.00
Indeno(1,2,3-cd)pyrene	C3-v0	5.69E-05	5.84E-05	6.61E-05	4.61E-05	1	17.72	20.05	0.34
Naphthalene	C3-v0	1.80E-02	1.81E-02	1.85E-02	1.72E-02	1	3.74	4.24	1.00
Phenanthrene	C3-v0	5.62E-03	5.65E-03	5.76E-03	5.47E-03	1	2.58	2.92	1.00
Propylene	A3-v0	3.85E-01	4.03E-01	4.03E-01	3.49E-01	1	8.06	9.12	1.00
Pyrene	C3-v0	5.11E-04	4.89E-04	5.60E-04	4.86E-04	1	8.16	9.24	1.00
Toluene	A3-v0	3.74E-02	3.70E-02	3.87E-02	3.64E-02	1	3.27	3.70	1.00
Xylene (Total)	A3-v0	2.68E-02	2.70E-02	2.77E-02	2.57E-02	1	3.85	4.36	1.00

Table D-13b. Summary of Data for Emission Factor Development – Internal Combustion Engines Firing Diesel Fuel, O_2 < 13%

Substance	CARB Rating	Emission Factor (lb/MMBtu)				Tests	RSD, %	Uncer-tainty, %	Detect Ratio
		Mean	Median	Maximum	Minimum				
Acenaphthene	C3-v0	4.54E-06	4.85E-06	6.12E-06	2.67E-06	1	38.39	43.44	1.00
Acenaphthylene	C3-v0	8.97E-06	9.23E-06	9.34E-06	8.34E-06	1	6.10	6.91	1.00
Acetaldehyde	A3-v0	2.44E-05	1.59E-05	4.56E-05	1.19E-05	1	75.34	85.25	1.00
Acrolein	A3-v0	7.57E-06	5.04E-06	1.26E-05	5.04E-06	1	57.74	65.33	0.56
Anthracene	C3-v0	1.20E-06	9.43E-07	2.04E-06	6.07E-07	1	62.56	70.79	1.00
Benzene	A3-v0	7.11E-04	7.00E-04	7.33E-04	7.00E-04	1	2.71	3.06	1.00
Benzo(a)anthracene	C3-v0	6.14E-07	5.85E-07	6.83E-07	5.75E-07	1	9.72	11.00	1.00
Benzo(a)pyrene	C3-v0	2.49E-07	2.71E-07	3.36E-07	1.41E-07	1	39.85	45.09	0.45
Benzo(b)fluoranthene	C3-v0	1.08E-06	9.98E-07	1.36E-06	8.89E-07	1	22.58	25.55	0.27
Benzo(g,h,i)perylene	C3-v0	5.42E-07	5.53E-07	5.85E-07	4.88E-07	1	9.17	10.37	1.00
Benzo(k)fluoranthene	C3-v0	2.13E-07	8.67E-08	4.88E-07	6.51E-08	1	111.67	126.37	0.76
Chrysene	C3-v0	1.49E-06	1.56E-06	1.60E-06	1.30E-06	1	11.03	12.48	1.00
Dibenz(a,h)anthracene	C3-v0	3.36E-07	3.25E-07	3.58E-07	3.25E-07	1	5.59	6.32	0.00
Fluoranthene	C3-v0	3.92E-06	3.86E-06	4.12E-06	3.78E-06	1	4.50	5.09	1.00
Fluorene	C3-v0	1.25E-05	1.24E-05	1.28E-05	1.21E-05	1	2.62	2.96	1.00
Formaldehyde	A3-v1	7.68E-05	3.27E-05	1.85E-04	1.23E-05	1	123.19	139.41	1.00
Indeno(1,2,3-cd)pyrene	C3-v0	4.01E-07	4.12E-07	4.66E-07	3.25E-07	1	17.72	20.05	0.34
Naphthalene	C3-v0	1.27E-04	1.28E-04	1.31E-04	1.21E-04	1	3.74	4.24	1.00
Phenanthrene	C3-v0	3.97E-05	3.98E-05	4.06E-05	3.86E-05	1	2.58	2.92	1.00
Propylene	A3-v0	2.71E-03	2.84E-03	2.84E-03	2.46E-03	1	8.06	9.12	1.00
Pyrene	C3-v0	3.61E-06	3.45E-06	3.95E-06	3.43E-06	1	8.16	9.24	1.00
Toluene	A3-v0	2.63E-04	2.61E-04	2.73E-04	2.57E-04	1	3.27	3.70	1.00
Xylene (Total)	A3-v0	1.89E-04	1.91E-04	1.95E-04	1.81E-04	1	3.85	4.36	1.00

Table D-14a. Summary of Data for Emission Factor Development – Internal Combustion Engines Firing Diesel Fuel, O_2 > 13%

Substance	CARB Rating	Emission Factor (lb/Mgal)				Tests	RSD, %	Uncer-tainty, %	Detect Ratio
		Mean	Median	Maximum	Minimum				
Acenaphthene	C3-v2	1.98E-04	1.15E-04	6.88E-04	1.41E-06	2	136.01	108.83	1.00
Acenaphthylene	C3-v3	7.03E-04	3.13E-04	1.86E-03	1.41E-06	2	125.21	100.19	1.00
Acetaldehyde	A3-v0	1.07E-01	1.07E-01	1.52E-01	5.82E-02	2	43.11	34.50	1.00
Acrolein	A3-v0	1.30E-02	8.43E-03	3.16E-02	6.62E-03	2	74.07	59.27	0.82
Anthracene	C3-v1	2.60E-04	2.95E-04	3.71E-04	3.11E-05	2	45.24	36.20	1.00
Benzaldehyde	A3-v0	1.26E-02	1.24E-02	1.35E-02	1.20E-02	1	6.29	7.12	0.68
Benzene	B3-v0	1.22E-01	1.13E-01	1.91E-01	6.57E-02	2	48.35	38.69	1.00
Benzo(a)anthracene	C3-v1	2.34E-04	2.04E-04	6.75E-04	1.55E-05	2	104.10	83.30	1.00
Benzo(a)pyrene	C3-v1	2.60E-05	1.82E-05	5.83E-05	1.41E-06	2	108.55	86.85	0.00
Benzo(b)fluoranthene	C3-v0	2.59E-05	2.72E-05	3.88E-05	1.17E-05	1	52.68	59.61	0.50
Benzo(b+k)fluoranthene	C3-v0	1.44E-06	1.45E-06	1.46E-06	1.41E-06	1	1.90	2.14	0.00
Benzo(g,h,i)perylene	C3-v1	6.78E-05	5.89E-05	1.55E-04	1.17E-05	2	71.76	57.42	0.43
Benzo(k)fluoranthene	C3-v0	4.14E-05	4.27E-05	6.22E-05	1.94E-05	1	51.63	58.43	0.50
1,3-Butadiene	C3-v0	5.41E-03	5.41E-03	5.41E-03	5.41E-03	1	0.00	0.00	0.00
Chrysene	C3-v0	4.90E-05	5.23E-05	6.75E-05	2.72E-05	2	33.96	27.17	1.00
Dibenz(a,h)anthracene	C3-v0	8.12E-05	6.41E-05	1.44E-04	4.42E-05	2	50.80	40.65	0.35
Fluoranthene	C3-v1	1.06E-03	8.29E-04	2.70E-03	6.99E-05	2	90.38	72.32	1.00
Fluorene	C3-v1	4.06E-03	3.96E-03	7.57E-03	2.10E-04	2	87.57	70.07	0.99
Formaldehyde	A3-v0	1.65E-01	1.45E-01	3.35E-01	8.55E-02	2	55.71	44.58	1.00
Indeno(1,2,3-cd)pyrene	C3-v1	6.43E-05	4.08E-05	1.32E-04	7.77E-06	2	83.82	67.07	0.30
Naphthalene	C3-v0	1.18E-02	7.84E-03	3.04E-02	5.92E-03	2	80.11	64.10	1.00
Phenanthrene	C3-v1	4.09E-03	4.23E-03	7.54E-03	3.11E-04	2	65.51	52.42	1.00
Propylene	B3-v0	3.58E-01	3.38E-01	5.83E-01	1.45E-01	2	56.61	45.30	1.00
Pyrene	C3-v0	6.66E-04	6.10E-04	1.07E-03	1.17E-04	2	51.99	41.60	1.00
Toluene	B3-v0	5.50E-02	5.49E-02	7.56E-02	3.44E-02	2	38.06	30.45	1.00
Xylene (m,p)	C3-v0	2.16E-02	2.09E-02	2.40E-02	1.98E-02	1	10.07	11.40	1.00
Xylene (o)	C3-v0	2.09E-02	2.09E-02	2.09E-02	2.09E-02	1	0.00	0.00	0.00
Xylene (Total)	A3-v0	3.59E-02	4.44E-02	4.44E-02	1.88E-02	1	41.24	46.67	1.00

Table D-14b. Summary of Data for Emission Factor Development – Internal Combustion Engines Firing Diesel Fuel, O_2 > 13%

Substance	CARB Rating	Emission Factor (lb/MMBtu)				Tests	RSD, %	Uncer-tainty, %	Detect Ratio
		Mean	Median	Maximum	Minimum				
Acenaphthene	C3-v2	1.43E-06	8.34E-07	4.97E-06	1.00E-08	2	136.02	108.84	1.00
Acenaphthylene	C3-v3	5.08E-06	2.27E-06	1.35E-05	1.00E-08	2	125.21	100.19	1.00
Acetaldehyde	A3-v0	7.64E-04	7.65E-04	1.08E-03	4.21E-04	2	42.48	33.99	1.00
Acrolein	A3-v0	9.37E-05	6.05E-05	2.29E-04	4.72E-05	2	74.63	59.71	0.82
Anthracene	C3-v1	1.86E-06	2.10E-06	2.65E-06	2.25E-07	2	45.07	36.07	1.00
Benzaldehyde	A3-v0	9.01E-05	8.84E-05	9.64E-05	8.54E-05	1	6.29	7.12	0.68
Benzene	B3-v0	8.81E-04	8.17E-04	1.38E-03	4.69E-04	2	48.96	39.17	1.00
Benzo(a)anthracene	C3-v1	1.67E-06	1.47E-06	4.81E-06	1.12E-07	2	103.79	83.05	1.00
Benzo(a)pyrene	C3-v1	1.88E-07	1.32E-07	4.21E-07	1.00E-08	2	108.63	86.92	0.00
Benzo(b)fluoranthene	C3-v0	1.87E-07	1.97E-07	2.81E-07	8.43E-08	1	52.68	59.61	0.50
Benzo(b+k)fluoranthene	C3-v0	1.03E-08	1.03E-08	1.04E-08	1.00E-08	1	1.90	2.14	0.00
Benzo(g,h,i)perylene	C3-v1	4.87E-07	4.24E-07	1.12E-06	8.43E-08	2	72.27	57.82	0.43
Benzo(k)fluoranthene	C3-v0	3.00E-07	3.09E-07	4.49E-07	1.40E-07	1	51.63	58.43	0.50
1,3-Butadiene	C3-v0	3.86E-05	3.86E-05	3.86E-05	3.86E-05	1	0.00	0.00	0.00
Chrysene	C3-v0	3.52E-07	3.76E-07	4.81E-07	1.97E-07	2	33.43	26.75	1.00
Dibenz(a,h)anthracene	C3-v0	5.84E-07	4.57E-07	1.04E-06	3.16E-07	2	51.34	41.08	0.35
Fluoranthene	C3-v1	7.59E-06	5.94E-06	1.93E-05	5.06E-07	2	90.02	72.03	1.00
Fluorene	C3-v1	2.90E-05	2.83E-05	5.40E-05	1.52E-06	2	87.31	69.86	0.99
Formaldehyde	A3-v0	1.19E-03	1.04E-03	2.39E-03	6.18E-04	2	55.30	44.25	1.00
Indeno(1,2,3-cd)pyrene	C3-v1	4.63E-07	2.91E-07	9.55E-07	5.62E-08	2	84.39	67.52	0.30
Naphthalene	C3-v0	8.48E-05	5.59E-05	2.20E-04	4.28E-05	2	80.69	64.56	1.00
Phenanthrene	C3-v1	2.93E-05	3.03E-05	5.38E-05	2.25E-06	2	65.09	52.08	1.00
Propylene	B3-v0	2.58E-03	2.44E-03	4.22E-03	1.04E-03	2	57.16	45.74	1.00
Pyrene	C3-v0	4.78E-06	4.38E-06	7.62E-06	8.43E-07	2	52.00	41.61	1.00
Toluene	B3-v0	3.96E-04	3.95E-04	5.47E-04	2.46E-04	2	38.72	30.98	1.00
Xylene (m,p)	C3-v0	1.54E-04	1.49E-04	1.71E-04	1.42E-04	1	10.07	11.40	1.00
Xylene (o)	C3-v0	1.49E-04	1.49E-04	1.49E-04	1.49E-04	1	0.00	0.00	0.00
Xylene (Total)	A3-v0	2.59E-04	3.21E-04	3.21E-04	1.36E-04	1	41.24	46.67	1.00

Table D-15a. Summary of Data for Emission Factor Development – Two-Stroke Internal Combustion Engines Firing Field Gas, Lean

Substance	CARB Rating	Emission Factor (lb/MMcf)				Tests	RSD, %	Uncer-tainty, %	Detect Ratio
		Mean	Median	Maximum	Minimum				
Acenaphthene	A3-v0	7.41E-04	7.41E-04	1.08E-03	4.00E-04	1	65.08	90.19	0.00
Acenaphthylene	A3-v0	1.11E-02	1.11E-02	1.57E-02	6.44E-03	1	59.06	81.86	1.00
Acetaldehyde	A3-v0	8.77E+00	9.42E+00	1.14E+01	5.53E+00	1	33.90	38.37	1.00
Acrolein	A3-v1	2.00E+00	1.44E+00	4.36E+00	2.00E-01	1	106.79	120.84	1.00
Anthracene	A3-v0	4.50E-03	4.50E-03	6.67E-03	2.34E-03	1	67.84	94.02	1.00
Benzene	A3-v0	7.85E+00	4.60E+00	1.36E+01	4.23E+00	2	60.68	53.19	1.00
Benzo(a)anthracene	A3-v0	8.97E-04	8.97E-04	9.11E-04	8.83E-04	1	2.17	3.01	1.00
Benzo(a)pyrene	A3-v0	8.75E-04	8.75E-04	1.53E-03	2.16E-04	1	106.44	147.52	0.00
Benzo(b)fluoranthene	A3-v0	1.48E-04	1.48E-04	1.71E-04	1.24E-04	1	22.41	31.05	0.00
Benzo(g,h,i)perylene	A3-v0	9.40E-05	9.40E-05	9.92E-05	8.89E-05	1	7.74	10.72	0.00
Benzo(k)fluoranthene	A3-v0	4.57E-03	4.57E-03	4.69E-03	4.44E-03	1	3.78	5.23	1.00
Chrysene	A3-v0	1.69E-03	1.69E-03	1.80E-03	1.58E-03	1	9.43	13.07	1.00
Dibenz(a,h)anthracene	A3-v0	7.70E-05	7.70E-05	8.29E-05	7.11E-05	1	10.86	15.06	0.00
Fluoranthene	A3-v0	1.66E-04	1.66E-04	2.16E-04	1.16E-04	1	42.96	59.53	0.00
Fluorene	A3-v0	2.44E-03	2.44E-03	3.61E-03	1.27E-03	1	67.90	94.10	0.00
Formaldehyde	A3-v1	5.09E+01	6.79E+01	8.53E+01	4.21E+00	2	69.80	55.85	1.00
Indeno(1,2,3-cd)pyrene	A3-v0	1.37E-04	1.37E-04	1.46E-04	1.29E-04	1	8.83	12.24	0.00
Naphthalene	A3-v0	2.19E-01	2.19E-01	2.22E-01	2.16E-01	1	1.88	2.61	1.00
Phenanthrene	A3-v0	4.91E-03	4.91E-03	6.49E-03	3.33E-03	1	45.46	63.00	1.00
Propylene	A3-v0	2.49E+01	1.77E+01	4.02E+01	1.14E+01	2	56.74	49.73	1.00
Pyrene	A3-v0	2.39E-04	2.39E-04	3.06E-04	1.71E-04	1	40.10	55.57	0.64
Toluene	A3-v1	2.86E+00	2.36E+00	5.74E+00	2.23E-01	2	72.83	63.84	1.00
Xylene (m,p)	A3-v0	6.04E-01	3.17E-01	1.25E+00	1.89E-01	2	80.76	70.79	1.00
Xylene (o)	A3-v0	2.88E-01	1.36E-01	5.91E-01	6.80E-02	2	88.41	77.49	1.00

Table D-15b. Summary of Data for Emission Factor Development – Two-Stroke Internal Combustion Engines Firing Field Gas, Lean

Substance	CARB Rating	Emission Factor (lb/MMBtu)				Tests	RSD, %	Uncer-tainty, %	Detect Ratio
		Mean	Median	Maximum	Minimum				
Acenaphthene	A3-v0	7.06E-07	7.06E-07	1.03E-06	3.81E-07	1	65.08	90.19	0.00
Acenaphthylene	A3-v0	1.05E-05	1.05E-05	1.49E-05	6.14E-06	1	59.06	81.86	1.00
Acetaldehyde	A3-v0	8.36E-03	8.98E-03	1.08E-02	5.27E-03	1	33.90	38.37	1.00
Acrolein	A3-v1	1.90E-03	1.37E-03	4.15E-03	1.90E-04	1	106.79	120.84	1.00
Anthracene	A3-v0	4.29E-06	4.29E-06	6.35E-06	2.23E-06	1	67.84	94.02	1.00
Benzene	A3-v0	7.48E-03	4.38E-03	1.30E-02	4.03E-03	2	60.68	53.19	1.00
Benzo(a)anthracene	A3-v0	8.54E-07	8.54E-07	8.68E-07	8.41E-07	1	2.17	3.01	1.00
Benzo(a)pyrene	A3-v0	8.33E-07	8.33E-07	1.46E-06	2.06E-07	1	106.44	147.52	0.00
Benzo(b)fluoranthene	A3-v0	1.41E-07	1.41E-07	1.63E-07	1.18E-07	1	22.41	31.05	0.00
Benzo(g,h,i)perylene	A3-v0	8.95E-08	8.95E-08	9.44E-08	8.46E-08	1	7.74	10.72	0.00
Benzo(k)fluoranthene	A3-v0	4.35E-06	4.35E-06	4.46E-06	4.23E-06	1	3.78	5.23	1.00
Chrysene	A3-v0	1.61E-06	1.61E-06	1.72E-06	1.50E-06	1	9.43	13.07	1.00
Dibenz(a,h)anthracene	A3-v0	7.33E-08	7.33E-08	7.90E-08	6.77E-08	1	10.86	15.06	0.00
Fluoranthene	A3-v0	1.58E-07	1.58E-07	2.06E-07	1.10E-07	1	42.96	59.53	0.00
Fluorene	A3-v0	2.32E-06	2.32E-06	3.43E-06	1.21E-06	1	67.90	94.10	0.00
Formaldehyde	A3-v1	4.85E-02	6.46E-02	8.13E-02	4.01E-03	2	69.80	55.85	1.00
Indeno(1,2,3-cd)pyrene	A3-v0	1.31E-07	1.31E-07	1.39E-07	1.23E-07	1	8.83	12.24	0.00
Naphthalene	A3-v0	2.09E-04	2.09E-04	2.12E-04	2.06E-04	1	1.88	2.61	1.00
Phenanthrene	A3-v0	4.68E-06	4.68E-06	6.18E-06	3.17E-06	1	45.46	63.00	1.00
Propylene	A3-v0	2.37E-02	1.69E-02	3.82E-02	1.09E-02	2	56.74	49.73	1.00
Pyrene	A3-v0	2.27E-07	2.27E-07	2.92E-07	1.63E-07	1	40.10	55.57	0.64
Toluene	A3-v1	2.72E-03	2.25E-03	5.47E-03	2.12E-04	2	72.83	63.84	1.00
Xylene (m,p)	A3-v0	5.75E-04	3.02E-04	1.19E-03	1.80E-04	2	80.76	70.79	1.00
Xylene (o)	A3-v0	2.74E-04	1.30E-04	5.63E-04	6.48E-05	2	88.41	77.49	1.00

Table D-16a. Summary of Data for Emission Factor Development – Four-Stroke Internal Combustion Engines Firing Field Gas, Lean

Substance	CARB Rating	Emission Factor (lb/MMcf)				Tests	RSD, %	Uncer-tainty, %	Detect Ratio
		Mean	Median	Maximum	Minimum				
Benzene	A2-v0	1.72E+00	2.07E+00	2.24E+00	9.25E-01	3	35.58	28.47	1.00
Formaldehyde	A2-v1	4.15E+01	3.14E+01	9.78E+01	4.62E+00	3	76.73	50.13	1.00
Propylene	A2-v0	1.59E+01	1.84E+01	2.02E+01	9.48E+00	3	30.49	24.40	1.00
Toluene	A2-v0	7.68E-01	9.38E-01	1.17E+00	2.69E-01	3	51.12	40.90	1.00
Xylene (m,p)	A2-v1	3.02E-01	1.90E-01	9.03E-01	7.74E-02	3	99.71	79.78	1.00
Xylene (o)	A2-v0	8.97E-02	9.57E-02	1.22E-01	6.13E-02	3	25.60	20.49	1.00

Table D-16b. Summary of Data for Emission Factor Development – Four-Stroke Internal Combustion Engines Firing Field Gas, Lean

Substance	CARB Rating	Emission Factor (lb/MMBtu)				Tests	RSD, %	Uncer-tainty, %	Detect Ratio
		Mean	Median	Maximum	Minimum				
Benzene	A2-v0	1.64E-03	1.97E-03	2.14E-03	8.81E-04	3	35.58	28.47	1.00
Formaldehyde	A2-v1	3.95E-02	2.99E-02	9.32E-02	4.40E-03	3	76.73	50.13	1.00
Propylene	A2-v0	1.52E-02	1.75E-02	1.92E-02	9.03E-03	3	30.49	24.40	1.00
Toluene	A2-v0	7.31E-04	8.94E-04	1.11E-03	2.56E-04	3	51.12	40.90	1.00
Xylene (m,p)	A2-v1	2.87E-04	1.81E-04	8.60E-04	7.37E-05	3	99.71	79.78	1.00
Xylene (o)	A2-v0	8.55E-05	9.11E-05	1.16E-04	5.84E-05	3	25.60	20.49	1.00

Table D-17a. Summary of Data for Emission Factor Development – Four-Stroke Internal Combustion Engines Firing Field Gas, Rich

Substance	CARB Rating	Emission Factor (lb/MMcf)				Tests	RSD, %	Uncer-tainty, %	Detect Ratio
		Mean	Median	Maximum	Minimum				
Benzene	A3-v0	1.10E+01	1.10E+01	1.11E+01	1.09E+01	1	1.15	1.59	1.00
Formaldehyde	A3-v0	5.05E+00	4.65E+00	5.98E+00	4.53E+00	1	15.91	18.00	1.00
Propylene	A3-v0	3.04E+00	3.04E+00	3.04E+00	3.04E+00	1	0.00	0.00	0.00
Toluene	A3-v0	3.44E+00	3.44E+00	3.55E+00	3.33E+00	1	4.56	6.32	1.00
Xylene (m,p)	A3-v0	5.37E-01	5.37E-01	5.62E-01	5.11E-01	1	6.73	9.33	1.00
Xylene (o)	A3-v0	2.68E-01	2.68E-01	2.81E-01	2.56E-01	1	6.73	9.33	1.00

Table D-17b. Summary of Data for Emission Factor Development – Four-Stroke Internal Combustion Engines Firing Field Gas, Rich

Substance	CARB Rating	Emission Factor (lb/MMBtu)				Tests	RSD, %	Uncer-tainty, %	Detect Ratio
		Mean	Median	Maximum	Minimum				
Benzene	A3-v0	1.05E-02	1.05E-02	1.06E-02	1.04E-02	1	1.15	1.59	1.00
Formaldehyde	A3-v0	4.81E-03	4.43E-03	5.69E-03	4.31E-03	1	15.91	18.00	1.00
Propylene	A3-v0	2.90E-03	2.90E-03	2.90E-03	2.90E-03	1	0.00	0.00	0.00
Toluene	A3-v0	3.28E-03	3.28E-03	3.38E-03	3.17E-03	1	4.56	6.32	1.00
Xylene (m,p)	A3-v0	5.11E-04	5.11E-04	5.36E-04	4.87E-04	1	6.73	9.33	1.00
Xylene (o)	A3-v0	2.56E-04	2.56E-04	2.68E-04	2.43E-04	1	6.73	9.33	1.00

Table D-18a. Summary of Data for Emission Factor Development – Four-Stroke Internal Combustion Engines Firing Natural Gas, Lean

Substance	CARB Rating	Emission Factor (lb/MMcf)				Tests	RSD, %	Uncer-tainty, %	Detect Ratio
		Mean	Median	Maximum	Minimum				
Acenaphthene	A3-v0	7.17E-04	6.36E-04	9.60E-04	5.57E-04	1	29.79	33.71	1.00
Acenaphthylene	A3-v0	7.59E-03	7.65E-03	1.07E-02	4.40E-03	1	41.56	47.03	1.00
Acetaldehyde	A1-v0	3.99E+00	2.96E+00	9.94E+00	1.52E+00	5	64.91	32.85	1.00
Acrolein	A1-v1	1.63E+00	1.10E+00	5.48E+00	2.01E-01	5	92.02	48.20	1.00
Anthracene	A3-v0	2.56E-04	2.40E-04	3.69E-04	1.60E-04	1	41.20	46.62	1.00
Benzene	A1-v1	1.21E+00	1.22E+00	2.47E+00	2.47E-01	7	47.28	24.77	1.00
Benzo(a)anthracene	A3-v0	7.78E-05	7.83E-05	9.60E-05	5.91E-05	1	23.70	26.82	1.00
Benzo(a)pyrene	A3-v0	3.55E-05	2.93E-05	5.17E-05	2.54E-05	1	39.97	45.23	0.76
Benzo(b)fluoranthene	A3-v2	3.27E-04	4.43E-05	9.29E-04	6.26E-06	1	159.90	180.94	0.95
Benzo(g,h,i)perylene	A3-v1	1.03E-04	2.93E-05	2.58E-04	2.09E-05	1	131.00	148.24	1.00
Benzo(k)fluoranthene	A3-v1	5.30E-04	4.87E-04	1.07E-03	3.08E-05	1	98.44	111.40	0.98
Chrysene	A3-v0	9.64E-05	1.11E-04	1.12E-04	6.61E-05	1	27.27	30.86	1.00
Dibenz(a,h)anthracene	A3-v0	1.09E-05	1.11E-05	1.47E-05	6.96E-06	1	35.41	40.07	1.00
Fluoranthene	A3-v0	2.50E-04	2.64E-04	3.32E-04	1.53E-04	1	36.21	40.98	1.00
Fluorene	A3-v0	4.60E-04	4.16E-04	6.28E-04	3.37E-04	1	32.63	36.92	0.00
Formaldehyde	A1-v0	2.87E+01	2.77E+01	4.79E+01	9.68E+00	7	38.56	16.49	1.00
Indeno(1,2,3-cd)pyrene	A3-v1	1.20E-04	3.91E-05	2.95E-04	2.43E-05	1	127.40	144.16	1.00
Naphthalene	A3-v0	1.22E-01	1.60E-01	1.86E-01	1.99E-02	1	73.21	82.85	1.00
Phenanthrene	A3-v0	8.93E-04	8.31E-04	1.26E-03	5.91E-04	1	37.66	42.62	1.00
Propylene	A1-v1	1.87E+01	8.81E+00	5.85E+01	4.12E+00	7	109.05	57.12	0.97
Pyrene	A3-v0	1.23E-04	1.42E-04	1.62E-04	6.61E-05	1	41.10	46.51	1.00
Toluene	A1-v0	4.12E-01	3.96E-01	5.70E-01	1.65E-01	7	33.98	17.80	1.00
Xylene (m,p)	A1-v0	8.63E-02	8.13E-02	1.59E-01	3.53E-02	7	46.27	24.24	1.00
Xylene (o)	A1-v0	4.94E-02	4.95E-02	9.14E-02	1.06E-02	7	39.52	20.70	0.95

Table D-18b. Summary of Data for Emission Factor Development – Four-Stroke Internal Combustion Engines Firing Natural Gas, Lean

Substance	CARB Rating	Emission Factor (lb/MMBtu)				Tests	RSD, %	Uncer-tainty, %	Detect Ratio
		Mean	Median	Maximum	Minimum				
Acenaphthene	A3-v0	6.83E-07	6.06E-07	9.14E-07	5.30E-07	1	29.79	33.71	1.00
Acenaphthylene	A3-v0	7.23E-06	7.29E-06	1.02E-05	4.19E-06	1	41.56	47.03	1.00
Acetaldehyde	A1-v0	3.80E-03	2.82E-03	9.47E-03	1.45E-03	5	64.91	32.85	1.00
Acrolein	A1-v1	1.56E-03	1.05E-03	5.22E-03	1.92E-04	5	92.02	48.20	1.00
Anthracene	A3-v0	2.44E-07	2.28E-07	3.52E-07	1.52E-07	1	41.20	46.62	1.00
Benzene	A1-v1	1.15E-03	1.17E-03	2.35E-03	2.35E-04	7	47.28	24.77	1.00
Benzo(a)anthracene	A3-v0	7.41E-08	7.45E-08	9.14E-08	5.63E-08	1	23.70	26.82	1.00
Benzo(a)pyrene	A3-v0	3.38E-08	2.79E-08	4.92E-08	2.42E-08	1	39.97	45.23	0.76
Benzo(b)fluoranthene	A3-v2	3.11E-07	4.22E-08	8.85E-07	5.96E-09	1	159.90	180.94	0.95
Benzo(g,h,i)perylene	A3-v1	9.80E-08	2.79E-08	2.46E-07	1.99E-08	1	131.00	148.24	1.00
Benzo(k)fluoranthene	A3-v1	5.04E-07	4.64E-07	1.02E-06	2.93E-08	1	98.44	111.40	0.98
Chrysene	A3-v0	9.19E-08	1.05E-07	1.07E-07	6.29E-08	1	27.27	30.86	1.00
Dibenz(a,h)anthracene	A3-v0	1.04E-08	1.05E-08	1.40E-08	6.63E-09	1	35.41	40.07	1.00
Fluoranthene	A3-v0	2.38E-07	2.52E-07	3.16E-07	1.46E-07	1	36.21	40.98	1.00
Fluorene	A3-v0	4.38E-07	3.96E-07	5.98E-07	3.21E-07	1	32.63	36.92	0.00
Formaldehyde	A1-v0	2.73E-02	2.64E-02	4.56E-02	9.22E-03	7	38.56	16.49	1.00
Indeno(1,2,3-cd)pyrene	A3-v1	1.14E-07	3.73E-08	2.81E-07	2.32E-08	1	127.40	144.16	1.00
Naphthalene	A3-v0	1.16E-04	1.52E-04	1.77E-04	1.90E-05	1	73.21	82.85	1.00
Phenanthrene	A3-v0	8.50E-07	7.92E-07	1.20E-06	5.63E-07	1	37.66	42.62	1.00
Propylene	A1-v1	1.78E-02	8.39E-03	5.57E-02	3.92E-03	7	109.05	57.12	0.97
Pyrene	A3-v0	1.18E-07	1.35E-07	1.55E-07	6.29E-08	1	41.10	46.51	1.00
Toluene	A1-v0	3.92E-04	3.77E-04	5.43E-04	1.57E-04	7	33.98	17.80	1.00
Xylene (m,p)	A1-v0	8.22E-05	7.74E-05	1.51E-04	3.36E-05	7	46.27	24.24	1.00
Xylene (o)	A1-v0	4.71E-05	4.71E-05	8.70E-05	1.01E-05	7	39.52	20.70	0.95

Table D-19a. Summary of Data for Emission Factor Development – Four-Stroke Internal Combustion Engines Firing Natural Gas, Rich

Substance	CARB Rating	Emission Factor (lb/MMcf)				Tests	RSD, %	Uncer-tainty, %	Detect Ratio
		Mean	Median	Maximum	Minimum				
Acetaldehyde	A3-v0	1.71E+00	1.70E+00	1.82E+00	1.60E+00	1	6.46	7.31	1.00
Acrolein	A3-v2	5.40E-01	4.16E-01	1.37E+00	2.59E-03	2	105.82	84.67	1.00
Benzene	A3-v0	9.87E+00	9.87E+00	1.02E+01	9.51E+00	1	5.05	7.00	1.00
Formaldehyde	A3-v1	5.32E+00	4.48E+00	1.14E+01	4.21E-01	2	100.69	80.57	1.00
Propylene	A3-v0	3.95E+01	3.95E+01	4.20E+01	3.70E+01	1	8.95	12.40	1.00
Toluene	A3-v0	2.51E+00	2.51E+00	2.62E+00	2.41E+00	1	6.15	8.52	1.00
Xylene (m,p)	A3-v0	4.41E-01	4.41E-01	4.54E-01	4.28E-01	1	4.04	5.60	1.00
Xylene (o)	A3-v0	2.17E-01	2.17E-01	2.22E-01	2.12E-01	1	3.29	4.56	1.00

Table D-19b. Summary of Data for Emission Factor Development – Four-Stroke Internal Combustion Engines Firing Natural Gas, Rich

Substance	CARB Rating	Emission Factor (lb/MMBtu)				Tests	RSD, %	Uncer-tainty, %	Detect Ratio
		Mean	Median	Maximum	Minimum				
Acetaldehyde	A3-v0	1.63E-03	1.62E-03	1.74E-03	1.53E-03	1	6.46	7.31	1.00
Acrolein	A3-v2	5.15E-04	3.97E-04	1.31E-03	2.50E-06	2	105.65	84.54	1.00
Benzene	A3-v0	9.40E-03	9.40E-03	9.73E-03	9.06E-03	1	5.05	7.00	1.00
Formaldehyde	A3-v1	5.07E-03	4.27E-03	1.09E-02	4.08E-04	2	100.52	80.43	1.00
Propylene	A3-v0	3.76E-02	3.76E-02	4.00E-02	3.52E-02	1	8.95	12.40	1.00
Toluene	A3-v0	2.40E-03	2.40E-03	2.50E-03	2.29E-03	1	6.15	8.52	1.00
Xylene (m,p)	A3-v0	4.20E-04	4.20E-04	4.32E-04	4.08E-04	1	4.04	5.60	1.00
Xylene (o)	A3-v0	2.06E-04	2.06E-04	2.11E-04	2.02E-04	1	3.29	4.56	1.00

Table D-20a. Summary of Data for Emission Factor Development – Steam Generators Firing Natural Gas

Substance	CARB Rating	Emission Factor (lb/MMcf)				Tests	RSD, %	Uncer-tainty, %	Detect Ratio
		Mean	Median	Maximum	Minimum				
Acetaldehyde	A3-v0	1.56E-02	1.57E-02	1.66E-02	1.44E-02	1	7.27	8.22	1.00
Acrolein	A3-v0	1.84E-02	1.75E-02	2.22E-02	1.55E-02	1	18.73	21.19	1.00
Benzene	B3-v0	3.86E-03	3.87E-03	3.88E-03	3.83E-03	2	0.57	0.46	0.00
Formaldehyde	A3-v1	2.95E-02	1.83E-02	9.16E-02	3.96E-03	2	111.23	89.00	1.00
Propylene	C3-v0	1.09E-01	1.09E-01	1.09E-01	1.09E-01	1	0.36	0.41	0.00
Toluene	B3-v0	1.20E-02	1.20E-02	1.20E-02	1.19E-02	2	0.57	0.46	0.00
Xylene (Total)	B3-v0	2.76E-02	2.76E-02	2.77E-02	2.74E-02	2	0.57	0.46	0.00

Table D-20b. Summary of Data for Emission Factor Development – Steam Generators Firing Natural Gas

Substance	CARB Rating	Emission Factor (lb/MMBtu)				Tests	RSD, %	Uncer-tainty, %	Detect Ratio
		Mean	Median	Maximum	Minimum				
Acetaldehyde	A3-v0	1.66E-05	1.68E-05	1.77E-05	1.53E-05	1	7.27	8.22	1.00
Acrolein	A3-v0	1.96E-05	1.86E-05	2.37E-05	1.65E-05	1	18.73	21.19	1.00
Benzene	B3-v0	3.94E-06	3.93E-06	4.10E-06	3.78E-06	2	4.28	3.42	0.00
Formaldehyde	A3-v1	3.11E-05	1.87E-05	9.75E-05	3.87E-06	2	113.45	90.78	1.00
Propylene	C3-v0	1.16E-04	1.16E-04	1.17E-04	1.16E-04	1	0.36	0.41	0.00
Toluene	B3-v0	1.22E-05	1.22E-05	1.27E-05	1.17E-05	2	4.28	3.42	0.00
Xylene (Total)	B3-v0	2.81E-05	2.81E-05	2.94E-05	2.70E-05	2	4.28	3.42	0.00

Table D-21a. Summary of Data for Emission Factor Development – Steam Generators Firing Natural Gas and Casing Vapor Recovery Gas

Substance	CARB Rating	Emission Factor (lb/MMcf)				Tests	RSD, %	Uncer-tainty, %	Detect Ratio
		Mean	Median	Maximum	Minimum				
Acenaphthene	A3-v0	1.04E-06	7.23E-07	2.38E-06	4.12E-07	2	69.67	55.75	0.72
Acenaphthylene	A3-v1	2.70E-06	6.70E-07	1.03E-05	4.12E-07	2	144.60	115.70	0.85
Acetaldehyde	A2-v0	1.12E-02	1.02E-02	2.67E-02	5.02E-03	4	55.73	31.53	0.84
Acrolein	A2-v0	1.05E-02	1.07E-02	1.82E-02	5.02E-03	4	37.86	21.42	0.88
Anthracene	A3-v0	2.09E-06	2.28E-06	3.82E-06	4.12E-07	2	62.45	49.97	0.97
Benzene	B1-v0	3.33E-03	2.68E-03	6.21E-03	2.36E-03	5	44.41	22.47	0.00
Benzo(a)anthracene	A3-v0	1.22E-06	1.12E-06	2.16E-06	6.82E-07	2	40.32	32.26	0.45
Benzo(a)pyrene	A3-v0	6.86E-07	6.46E-07	1.33E-06	3.98E-07	2	49.51	39.61	0.32
Benzo(b)fluoranthene	A3-v0	2.00E-06	9.18E-07	4.78E-06	6.36E-07	2	95.49	76.41	0.84
Benzo(g,h,i)perylene	A3-v0	9.80E-07	6.70E-07	1.75E-06	4.12E-07	2	61.38	49.11	0.59
Benzo(k)fluoranthene	A3-v0	8.21E-07	6.70E-07	1.39E-06	4.12E-07	2	44.95	35.97	0.52
Chrysene	A3-v0	1.55E-06	1.83E-06	2.16E-06	6.82E-07	2	38.63	30.91	0.33
Dibenz(a,h)anthracene	A3-v0	5.30E-07	5.24E-07	6.82E-07	3.96E-07	2	26.65	21.32	0.00
Ethylbenzene	A3-v0	9.22E-03	7.34E-03	1.86E-02	3.69E-03	2	55.96	44.77	0.54
Fluoranthene	A3-v0	3.66E-06	1.71E-06	9.03E-06	1.01E-06	2	98.55	78.86	1.00
Fluorene	A3-v0	5.63E-06	2.47E-06	1.30E-05	1.77E-06	2	95.48	76.40	1.00
Formaldehyde	A2-v1	1.58E-02	9.51E-03	7.01E-02	5.02E-03	4	117.82	66.66	0.70
Hydrogen Sulfide	C3-v0	1.48E-01	1.43E-01	2.28E-01	7.39E-02	1	51.99	58.83	1.00
Indeno(1,2,3-cd)pyrene	A3-v0	1.17E-06	6.70E-07	2.38E-06	4.12E-07	2	76.13	60.92	0.66
Naphthalene	A3-v0	2.89E-04	2.24E-04	5.54E-04	1.50E-04	2	56.04	44.84	1.00
Phenanthrene	A3-v0	1.64E-05	1.21E-05	3.17E-05	6.59E-06	2	64.15	51.33	1.00
Propylene	C2-v1	1.83E-01	7.80E-02	6.30E-01	6.71E-03	4	117.13	66.27	0.72
Pyrene	A3-v1	6.00E-06	2.78E-06	1.74E-05	8.19E-07	2	109.69	87.77	1.00
Toluene	B1-v0	1.37E-02	9.47E-03	3.08E-02	7.33E-03	5	59.41	30.07	0.64
Xylene (Total)	B1-v0	1.85E-02	1.70E-02	4.03E-02	1.11E-02	5	36.66	18.55	0.23

Table D-21b. Summary of Data for Emission Factor Development – Steam Generators Firing Natural Gas and Casing Vapor Recovery Gas

Substance	CARB Rating	Emission Factor (lb/MMBtu)				Tests	RSD, %	Uncer-tainty, %	Detect Ratio
		Mean	Median	Maximum	Minimum				
Acenaphthene	A3-v0	1.06E-09	7.84E-10	2.34E-09	4.06E-10	2	65.71	52.57	0.72
Acenaphthylene	A3-v1	2.69E-09	7.14E-10	1.01E-08	4.06E-10	2	142.14	113.73	0.85
Acetaldehyde	A2-v0	1.85E-05	1.68E-05	4.88E-05	5.47E-06	4	66.12	37.41	0.84
Acrolein	A2-v0	1.69E-05	1.92E-05	2.62E-05	5.47E-06	4	41.86	23.68	0.88
Anthracene	A3-v1	2.18E-09	2.33E-09	4.26E-09	4.06E-10	2	64.55	51.65	0.97
Benzene	B1-v0	4.45E-06	4.40E-06	6.12E-06	2.75E-06	5	23.61	11.95	0.00
Benzo(a)anthracene	A3-v0	1.28E-09	1.12E-09	2.42E-09	7.12E-10	2	45.67	36.54	0.45
Benzo(a)pyrene	A3-v0	7.08E-10	7.11E-10	1.31E-09	3.92E-10	2	47.05	37.64	0.32
Benzo(b)fluoranthene	A3-v0	2.01E-09	9.26E-10	4.71E-09	7.10E-10	2	92.63	74.12	0.84
Benzo(g,h,i)perylene	A3-v0	9.98E-10	7.14E-10	1.73E-09	4.06E-10	2	57.41	45.93	0.59
Benzo(k)fluoranthene	A3-v0	8.41E-10	7.14E-10	1.37E-09	4.06E-10	2	41.36	33.09	0.52
Chrysene	A3-v0	1.60E-09	1.80E-09	2.42E-09	7.12E-10	2	39.17	31.35	0.33
Dibenz(a,h)anthracene	A3-v0	5.54E-10	5.58E-10	7.15E-10	3.90E-10	2	31.29	25.04	0.00
Ethylbenzene	A3-v0	9.63E-06	7.23E-06	2.02E-05	4.02E-06	2	59.81	47.86	0.54
Fluoranthene	A3-v0	3.67E-09	1.78E-09	8.90E-09	1.07E-09	2	95.56	76.46	1.00
Fluorene	A3-v0	5.66E-09	2.64E-09	1.28E-08	1.85E-09	2	92.16	73.74	1.00
Formaldehyde	A2-v1	2.53E-05	1.56E-05	1.01E-04	5.47E-06	4	111.34	63.00	0.70
Hydrogen Sulfide	C3-v0	1.59E-04	1.60E-04	2.38E-04	8.02E-05	1	49.59	56.11	1.00
Indeno(1,2,3-cd)pyrene	A3-v0	1.18E-09	7.14E-10	2.34E-09	4.06E-10	2	72.24	57.80	0.66
Naphthalene	A3-v0	2.93E-07	2.33E-07	5.46E-07	1.57E-07	2	52.01	41.62	1.00
Phenanthrene	A3-v0	1.68E-08	1.34E-08	3.12E-08	6.50E-09	2	60.61	48.50	1.00
Propylene	C2-v1	2.29E-04	1.27E-04	6.83E-04	1.23E-05	4	94.36	53.39	0.72
Pyrene	A3-v1	6.02E-09	2.93E-09	1.72E-08	8.55E-10	2	106.75	85.42	1.00
Toluene	B1-v0	1.73E-05	1.43E-05	3.04E-05	1.34E-05	5	33.16	16.78	0.64
Xylene (Total)	B1-v0	2.66E-05	3.11E-05	4.36E-05	1.21E-05	5	36.70	18.57	0.23

Table D-22a. Summary of Data for Emission Factor Development – Gas Turbines with No Duct Burners Firing Natural Gas

Substance	CARB Rating	Emission Factor (lb/MMcf)				Tests	RSD, %	Uncer-tainty, %	Detect Ratio
		Mean	Median	Maximum	Minimum				
Acenaphthene	A3-v0	3.39E-06	2.11E-06	8.87E-06	1.26E-06	2	88.62	70.91	0.67
Acenaphthylene	A3-v0	3.00E-06	2.87E-06	5.78E-06	1.26E-06	2	56.64	45.32	0.54
Acetaldehyde	A3-v0	3.96E-02	4.76E-02	5.38E-02	1.73E-02	1	49.40	55.90	0.85
Acrolein	A3-v0	1.81E-02	1.81E-02	1.82E-02	1.79E-02	1	0.68	0.77	0.00
Anthracene	A3-v1	3.52E-05	7.45E-06	1.53E-04	3.77E-06	2	167.76	134.23	1.00
Benzene	A3-v0	1.24E-02	1.23E-02	1.85E-02	6.96E-03	2	47.07	37.67	0.00
Benzo(a)anthracene	A3-v0	2.89E-06	2.39E-06	5.89E-06	1.84E-06	2	53.67	42.94	0.34
Benzo(a)pyrene	A3-v0	2.13E-06	2.09E-06	3.17E-06	1.26E-06	2	43.24	34.60	0.00
Benzo(b)fluoranthene	A3-v0	3.40E-06	2.87E-06	8.93E-06	1.26E-06	2	83.26	66.62	0.44
Benzo(g,h,i)perylene	A3-v0	2.47E-06	2.87E-06	3.31E-06	1.26E-06	2	37.62	30.10	0.22
Benzo(k)fluoranthene	A3-v0	2.67E-06	2.87E-06	4.54E-06	1.26E-06	2	46.39	37.12	0.28
Chrysene	A3-v0	5.08E-06	5.99E-06	6.34E-06	2.89E-06	2	31.73	25.39	0.31
Dibenz(a,h)anthracene	A3-v0	2.13E-06	2.09E-06	3.17E-06	1.26E-06	2	43.24	34.60	0.00
Ethylbenzene	A3-v0	1.53E-02	1.52E-02	2.20E-02	9.49E-03	2	40.90	32.72	0.00
Fluoranthene	A3-v0	1.20E-05	1.21E-05	1.74E-05	5.78E-06	2	36.16	28.93	1.00
Fluorene	A3-v0	1.55E-05	1.42E-05	3.17E-05	8.05E-06	2	54.85	43.89	1.00
Formaldehyde	A3-v0	2.09E-02	1.73E-02	2.81E-02	1.73E-02	1	29.80	33.72	0.45
Indeno(1,2,3-cd)pyrene	A3-v0	2.38E-06	2.82E-06	3.17E-06	1.26E-06	2	35.90	28.73	0.20
Naphthalene	A3-v0	7.51E-04	8.01E-04	9.51E-04	4.56E-04	2	28.73	22.99	1.00
Phenanthrene	A3-v0	6.71E-05	4.95E-05	1.46E-04	2.62E-05	2	64.08	51.28	1.00
Propylene	A3-v0	1.71E+00	1.68E+00	2.00E+00	1.46E+00	1	15.66	17.72	1.00
Pyrene	A3-v0	2.31E-05	2.09E-05	4.23E-05	5.78E-06	2	63.17	50.55	1.00
Toluene	A3-v1	7.17E-02	5.89E-02	1.68E-01	8.22E-03	2	88.92	71.15	0.98
Xylene (Total)	A3-v0	3.63E-02	4.11E-02	6.26E-02	9.70E-03	2	52.17	41.75	0.38

Table D-22b. Summary of Data for Emission Factor Development – Gas Turbines with No Duct Burners Firing Natural Gas

Substance	CARB Rating	Emission Factor (lb/MMBtu)				Tests	RSD, %	Uncer-tainty, %	Detect Ratio
		Mean	Median	Maximum	Minimum				
Acenaphthene	A3-v0	3.25E-09	2.03E-09	8.46E-09	1.23E-09	2	87.69	70.16	0.67
Acenaphthylene	A3-v0	2.90E-09	2.74E-09	5.67E-09	1.23E-09	2	57.20	45.77	0.54
Acetaldehyde	A3-v0	3.78E-05	4.55E-05	5.14E-05	1.65E-05	1	49.40	55.90	0.85
Acrolein	A3-v0	1.72E-05	1.73E-05	1.73E-05	1.71E-05	1	0.68	0.77	0.00
Anthracene	A3-v1	3.43E-08	7.19E-09	1.50E-07	3.70E-09	2	168.94	135.17	1.00
Benzene	A3-v0	1.20E-05	1.19E-05	1.82E-05	6.64E-06	2	48.32	38.66	0.00
Benzo(a)anthracene	A3-v0	2.78E-09	2.31E-09	5.62E-09	1.80E-09	2	52.46	41.98	0.34
Benzo(a)pyrene	A3-v0	2.05E-09	2.01E-09	3.02E-09	1.23E-09	2	41.94	33.56	0.00
Benzo(b)fluoranthene	A3-v0	3.30E-09	2.74E-09	8.77E-09	1.23E-09	2	84.51	67.62	0.44
Benzo(g,h,i)perylene	A3-v0	2.38E-09	2.74E-09	3.25E-09	1.23E-09	2	37.17	29.74	0.22
Benzo(k)fluoranthene	A3-v0	2.58E-09	2.74E-09	4.46E-09	1.23E-09	2	46.68	37.35	0.28
Chrysene	A3-v0	4.93E-09	5.88E-09	6.05E-09	2.76E-09	2	32.43	25.95	0.31
Dibenz(a,h)anthracene	A3-v0	2.05E-09	2.01E-09	3.02E-09	1.23E-09	2	41.94	33.56	0.00
Ethylbenzene	A3-v0	1.49E-05	1.48E-05	2.16E-05	9.05E-06	2	42.21	33.78	0.00
Fluoranthene	A3-v0	1.16E-08	1.16E-08	1.71E-08	5.51E-09	2	36.82	29.47	1.00
Fluorene	A3-v0	1.49E-08	1.40E-08	3.02E-08	7.90E-09	2	53.86	43.09	1.00
Formaldehyde	A3-v0	1.99E-05	1.65E-05	2.68E-05	1.65E-05	1	29.80	33.72	0.45
Indeno(1,2,3-cd)pyrene	A3-v0	2.29E-09	2.73E-09	3.02E-09	1.23E-09	2	35.08	28.07	0.20
Naphthalene	A3-v0	7.29E-07	7.77E-07	9.33E-07	4.35E-07	2	30.01	24.02	1.00
Phenanthrene	A3-v0	6.46E-08	4.86E-08	1.39E-07	2.57E-08	2	62.98	50.39	1.00
Propylene	A3-v0	1.63E-03	1.61E-03	1.90E-03	1.39E-03	1	15.66	17.72	1.00
Pyrene	A3-v0	2.25E-08	2.03E-08	4.15E-08	5.51E-09	2	64.16	51.34	1.00
Toluene	A3-v1	7.01E-05	5.75E-05	1.65E-04	7.85E-06	2	89.58	71.67	0.98
Xylene (Total)	A3-v0	3.52E-05	4.04E-05	5.97E-05	9.25E-06	2	51.95	41.57	0.38

Table D-23a. Summary of Data for Emission Factor Development – Gas Turbines with No Duct Burners Firing Natural Gas Controlled with Selective Catalytic Reduction and Carbon Monoxide Oxidation Catalyst

Substance	CARB Rating	Emission Factor (lb/MMcf)				Tests	RSD, %	Uncer-tainty, %	Detect Ratio
		Mean	Median	Maximum	Minimum				
Acenaphthene	A3-v0	3.39E-06	2.11E-06	8.87E-06	1.26E-06	2	88.62	70.91	0.67
Acenaphthylene	A3-v0	3.00E-06	2.87E-06	5.78E-06	1.26E-06	2	56.64	45.32	0.54
Acetaldehyde	A3-v0	3.96E-02	4.76E-02	5.38E-02	1.73E-02	1	49.40	55.90	0.85
Acrolein	A3-v0	1.81E-02	1.81E-02	1.82E-02	1.79E-02	1	0.68	0.77	0.00
Anthracene	A3-v1	3.52E-05	7.45E-06	1.53E-04	3.77E-06	2	167.76	134.23	1.00
Benzene	A3-v0	1.24E-02	1.23E-02	1.85E-02	6.96E-03	2	47.07	37.67	0.00
Benzo(a)anthracene	A3-v0	2.89E-06	2.39E-06	5.89E-06	1.84E-06	2	53.67	42.94	0.34
Benzo(a)pyrene	A3-v0	2.13E-06	2.09E-06	3.17E-06	1.26E-06	2	43.24	34.60	0.00
Benzo(b)fluoranthene	A3-v0	3.40E-06	2.87E-06	8.93E-06	1.26E-06	2	83.26	66.62	0.44
Benzo(g,h,i)perylene	A3-v0	2.47E-06	2.87E-06	3.31E-06	1.26E-06	2	37.62	30.10	0.22
Benzo(k)fluoranthene	A3-v0	2.67E-06	2.87E-06	4.54E-06	1.26E-06	2	46.39	37.12	0.28
Chrysene	A3-v0	5.08E-06	5.99E-06	6.34E-06	2.89E-06	2	31.73	25.39	0.31
Dibenz(a,h)anthracene	A3-v0	2.13E-06	2.09E-06	3.17E-06	1.26E-06	2	43.24	34.60	0.00
Ethylbenzene	A3-v0	1.53E-02	1.52E-02	2.20E-02	9.49E-03	2	40.90	32.72	0.00
Fluoranthene	A3-v0	1.20E-05	1.21E-05	1.74E-05	5.78E-06	2	36.16	28.93	1.00
Fluorene	A3-v0	1.55E-05	1.42E-05	3.17E-05	8.05E-06	2	54.85	43.89	1.00
Formaldehyde	A3-v0	2.09E-02	1.73E-02	2.81E-02	1.73E-02	1	29.80	33.72	0.45
Indeno(1,2,3-cd)pyrene	A3-v0	2.38E-06	2.82E-06	3.17E-06	1.26E-06	2	35.90	28.73	0.20
Naphthalene	A3-v0	7.51E-04	8.01E-04	9.51E-04	4.56E-04	2	28.73	22.99	1.00
Phenanthrene	A3-v0	6.71E-05	4.95E-05	1.46E-04	2.62E-05	2	64.08	51.28	1.00
Propylene	A3-v0	1.71E+00	1.68E+00	2.00E+00	1.46E+00	1	15.66	17.72	1.00
Pyrene	A3-v0	2.31E-05	2.09E-05	4.23E-05	5.78E-06	2	63.17	50.55	1.00
Toluene	A3-v1	7.17E-02	5.89E-02	1.68E-01	8.22E-03	2	88.92	71.15	0.98
Xylene (Total)	A3-v0	3.63E-02	4.11E-02	6.26E-02	9.70E-03	2	52.17	41.75	0.38

Table D-23b. Summary of Data for Emission Factor Development – Gas Turbines with No Duct Burners Firing Natural Gas Controlled with Selective Catalytic Reduction and Carbon Monoxide Oxidation Catalyst

Substance	CARB Rating	Emission Factor (lb/MMBtu)				Tests	RSD, %	Uncer-tainty, %	Detect Ratio
		Mean	Median	Maximum	Minimum				
Acenaphthene	A3-v0	3.25E-09	2.03E-09	8.46E-09	1.23E-09	2	87.69	70.16	0.67
Acenaphthylene	A3-v0	2.90E-09	2.74E-09	5.67E-09	1.23E-09	2	57.20	45.77	0.54
Acetaldehyde	A3-v0	3.78E-05	4.55E-05	5.14E-05	1.65E-05	1	49.40	55.90	0.85
Acrolein	A3-v0	1.72E-05	1.73E-05	1.73E-05	1.71E-05	1	0.68	0.77	0.00
Anthracene	A3-v1	3.43E-08	7.19E-09	1.50E-07	3.70E-09	2	168.94	135.17	1.00
Benzene	A3-v0	1.20E-05	1.19E-05	1.82E-05	6.64E-06	2	48.32	38.66	0.00
Benzo(a)anthracene	A3-v0	2.78E-09	2.31E-09	5.62E-09	1.80E-09	2	52.46	41.98	0.34
Benzo(a)pyrene	A3-v0	2.05E-09	2.01E-09	3.02E-09	1.23E-09	2	41.94	33.56	0.00
Benzo(b)fluoranthene	A3-v0	3.30E-09	2.74E-09	8.77E-09	1.23E-09	2	84.51	67.62	0.44
Benzo(g,h,i)perylene	A3-v0	2.38E-09	2.74E-09	3.25E-09	1.23E-09	2	37.17	29.74	0.22
Benzo(k)fluoranthene	A3-v0	2.58E-09	2.74E-09	4.46E-09	1.23E-09	2	46.68	37.35	0.28
Chrysene	A3-v0	4.93E-09	5.88E-09	6.05E-09	2.76E-09	2	32.43	25.95	0.31
Dibenz(a,h)anthracene	A3-v0	2.05E-09	2.01E-09	3.02E-09	1.23E-09	2	41.94	33.56	0.00
Ethylbenzene	A3-v0	1.49E-05	1.48E-05	2.16E-05	9.05E-06	2	42.21	33.78	0.00
Fluoranthene	A3-v0	1.16E-08	1.16E-08	1.71E-08	5.51E-09	2	36.82	29.47	1.00
Fluorene	A3-v0	1.49E-08	1.40E-08	3.02E-08	7.90E-09	2	53.86	43.09	1.00
Formaldehyde	A3-v0	1.99E-05	1.65E-05	2.68E-05	1.65E-05	1	29.80	33.72	0.45
Indeno(1,2,3-cd)pyrene	A3-v0	2.29E-09	2.73E-09	3.02E-09	1.23E-09	2	35.08	28.07	0.20
Naphthalene	A3-v0	7.29E-07	7.77E-07	9.33E-07	4.35E-07	2	30.01	24.02	1.00
Phenanthrene	A3-v0	6.46E-08	4.86E-08	1.39E-07	2.57E-08	2	62.98	50.39	1.00
Propylene	A3-v0	1.63E-03	1.61E-03	1.90E-03	1.39E-03	1	15.66	17.72	1.00
Pyrene	A3-v0	2.25E-08	2.03E-08	4.15E-08	5.51E-09	2	64.16	51.34	1.00
Toluene	A3-v1	7.01E-05	5.75E-05	1.65E-04	7.85E-06	2	89.58	71.67	0.98
Xylene (Total)	A3-v0	3.52E-05	4.04E-05	5.97E-05	9.25E-06	2	51.95	41.57	0.38

Table D-24a. Summary of Data for Emission Factor Development – Gas Turbines with Duct Burners Firing Natural Gas Controlled with Selective Catalytic Reduction

Substance	CARB Rating	Emission Factor (lb/MMcf)				Tests	RSD, %	Uncer-tainty, %	Detect Ratio
		Mean	Median	Maximum	Minimum				
Formaldehyde	C3-v0	6.22E+00	6.09E+00	6.87E+00	5.71E+00	1	9.57	10.83	1.00

Table D-24b. Summary of Data for Emission Factor Development – Gas Turbines with Duct Burners Firing Natural Gas Controlled with Selective Catalytic Reduction

Substance	CARB Rating	Emission Factor (lb/MMBtu)				Tests	RSD, %	Uncer-tainty, %	Detect Ratio
		Mean	Median	Maximum	Minimum				
Formaldehyde	C3-v0	6.02E-03	5.89E-03	6.65E-03	5.52E-03	1	9.57	10.83	1.00

Table D-25a. Summary of Data for Emission Factor Development – Gas Turbines with Duct Burners Firing Natural Gas and Refinery Fuel Gas Controlled with Selective Catalytic Reduction and Carbon Monoxide Oxidation Catalyst

Substance	CARB Rating	Emission Factor (lb/MMcf)				Tests	RSD, %	Uncer-tainty, %	Detect Ratio
		Mean	Median	Maximum	Minimum				
Acenaphthene	C3-v0	2.37E-05	2.15E-05	3.82E-05	1.15E-05	1	56.84	64.32	1.00
Acenaphthylene	C3-v0	1.15E-05	1.29E-05	1.32E-05	8.53E-06	1	22.70	25.68	1.00
Acetaldehyde	A3-v0	4.54E-03	3.41E-03	6.83E-03	3.38E-03	1	43.72	49.48	1.00
Anthracene	C3-v0	2.66E-05	2.43E-05	3.66E-05	1.89E-05	1	34.03	38.51	1.00
Benzene	C3-v0	1.66E-01	1.68E-01	1.81E-01	1.46E-01	2	9.66	7.73	0.00
Benzo(a)anthracene	C3-v1	1.60E-05	3.47E-06	4.15E-05	3.03E-06	1	138.05	156.22	0.86
Benzo(a)pyrene	C3-v0	1.02E-05	1.05E-05	1.36E-05	6.63E-06	1	34.09	38.57	0.00
Benzo(b)fluoranthene	C3-v0	2.69E-05	3.19E-05	3.44E-05	1.45E-05	1	40.14	45.42	0.82
Benzo(g,h,i)perylene	C3-v0	2.06E-05	2.00E-05	2.71E-05	1.45E-05	1	30.62	34.65	0.00
Benzo(k)fluoranthene	C3-v0	1.34E-05	1.21E-05	2.00E-05	8.05E-06	1	45.53	51.52	0.00
Cadmium	C3-v0	2.08E-03	1.06E-03	4.16E-03	1.03E-03	1	86.47	97.85	0.67
Chromium (Hex)	C3-v0	7.46E-03	7.08E-03	1.50E-02	1.53E-03	2	83.96	67.18	0.00
Chromium (Total)	C3-v1	5.35E-02	3.36E-02	1.84E-01	1.51E-02	2	121.46	97.19	1.00
Chrysene	C3-v0	1.16E-04	6.85E-05	2.43E-04	3.47E-05	1	96.95	109.70	1.00
Copper	A3-v0	1.89E-03	1.98E-03	2.64E-03	1.04E-03	1	42.72	48.34	1.00
Dibenz(a,h)anthracene	C3-v0	7.10E-06	8.12E-06	8.59E-06	4.58E-06	1	30.92	34.99	0.00
Fluoranthene	C3-v0	1.06E-04	1.07E-04	1.58E-04	5.53E-05	1	48.01	54.33	1.00
Fluorene	C3-v1	1.90E-04	8.02E-05	4.46E-04	4.26E-05	1	117.53	132.99	1.00
Formaldehyde	A3-v0	1.71E-01	9.23E-02	3.42E-01	7.76E-02	1	87.01	98.46	1.00
Hydrogen Sulfide	A3-v0	1.65E-01	1.64E-01	1.72E-01	1.59E-01	1	4.20	4.76	0.00
Indeno(1,2,3-cd)pyrene	C3-v0	9.83E-06	1.06E-05	1.18E-05	7.10E-06	1	24.76	28.02	0.00
Manganese	A3-v0	3.49E-03	2.36E-03	6.79E-03	1.32E-03	1	83.26	94.21	1.00
Mercury	A3-v0	4.63E-03	4.01E-03	8.27E-03	2.55E-03	2	51.31	41.05	1.00
Naphthalene	C3-v0	4.02E-02	3.98E-02	4.30E-02	3.79E-02	1	6.36	7.20	1.00
Nickel	C3-v0	8.18E-03	6.79E-03	1.43E-02	3.40E-03	1	68.51	77.52	1.00
Phenanthrene	C3-v0	6.85E-04	5.53E-04	9.72E-04	5.30E-04	1	36.34	41.12	1.00
Phenol	C3-v0	1.53E-02	1.58E-02	1.59E-02	1.43E-02	1	5.81	6.57	0.00
Pyrene	C3-v0	1.28E-04	1.04E-04	2.29E-04	5.21E-05	1	71.00	80.34	1.00
Toluene	E3-v0	1.79E-01	1.78E-01	1.87E-01	1.72E-01	1	4.37	4.94	0.00
Xylene (Total)	E3-v0	4.13E-01	4.14E-01	4.15E-01	4.11E-01	1	0.50	0.56	0.00
Zinc	A3-v0	1.65E-02	1.56E-02	1.93E-02	1.45E-02	1	15.37	17.39	1.00

Table D-25b. Summary of Data for Emission Factor Development – Gas Turbines with Duct Burners Firing Natural Gas and Refinery Fuel Gas Controlled with Selective Catalytic Reduction and Carbon Monoxide Oxidation Catalyst

Substance	CARB Rating	Emission Factor (lb/MMBtu)				Tests	RSD, %	Uncer-tainty, %	Detect Ratio
		Mean	Median	Maximum	Minimum				
Acenaphthene	C3-v0	2.21E-08	2.00E-08	3.55E-08	1.07E-08	1	56.84	64.32	1.00
Acenaphthylene	C3-v0	1.07E-08	1.20E-08	1.23E-08	7.93E-09	1	22.70	25.68	1.00
Acetaldehyde	A3-v0	4.11E-06	3.09E-06	6.18E-06	3.06E-06	1	43.68	49.43	1.00
Anthracene	C3-v0	2.48E-08	2.26E-08	3.41E-08	1.76E-08	1	34.03	38.51	1.00
Benzene	C3-v0	1.52E-04	1.54E-04	1.69E-04	1.32E-04	2	11.10	8.88	0.00
Benzo(a)anthracene	C3-v1	1.49E-08	3.23E-09	3.86E-08	2.81E-09	1	138.05	156.22	0.86
Benzo(a)pyrene	C3-v0	9.53E-09	9.78E-09	1.26E-08	6.17E-09	1	34.09	38.57	0.00
Benzo(b)fluoranthene	C3-v0	2.50E-08	2.96E-08	3.20E-08	1.35E-08	1	40.14	45.42	0.82
Benzo(g,h,i)perylene	C3-v0	1.91E-08	1.86E-08	2.52E-08	1.35E-08	1	30.62	34.65	0.00
Benzo(k)fluoranthene	C3-v0	1.25E-08	1.13E-08	1.86E-08	7.49E-09	1	45.53	51.52	0.00
Cadmium	C3-v0	1.94E-06	9.84E-07	3.87E-06	9.55E-07	1	86.47	97.85	0.67
Chromium (Hex)	C3-v0	6.95E-06	6.60E-06	1.39E-05	1.45E-06	2	83.59	66.88	0.00
Chromium (Total)	C3-v1	4.99E-05	3.15E-05	1.71E-04	1.43E-05	2	120.88	96.72	1.00
Chrysene	C3-v0	1.07E-07	6.37E-08	2.26E-07	3.23E-08	1	96.95	109.70	1.00
Copper	A3-v0	1.75E-06	1.84E-06	2.46E-06	9.65E-07	1	42.72	48.34	1.00
Dibenz(a,h)anthracene	C3-v0	6.60E-09	7.55E-09	7.99E-09	4.26E-09	1	30.92	34.99	0.00
Fluoranthene	C3-v0	9.90E-08	9.92E-08	1.46E-07	5.14E-08	1	48.01	54.33	1.00
Fluorene	C3-v1	1.76E-07	7.46E-08	4.15E-07	3.96E-08	1	117.53	132.99	1.00
Formaldehyde	A3-v0	1.54E-04	8.36E-05	3.09E-04	7.03E-05	1	86.98	98.42	1.00
Hydrogen Sulfide	A3-v0	1.50E-04	1.49E-04	1.56E-04	1.44E-04	1	4.30	4.86	0.00
Indeno(1,2,3-cd)pyrene	C3-v0	9.14E-09	9.85E-09	1.10E-08	6.61E-09	1	24.76	28.02	0.00
Manganese	A3-v0	3.25E-06	2.19E-06	6.32E-06	1.23E-06	1	83.26	94.21	1.00
Mercury	A3-v0	4.35E-06	3.73E-06	7.82E-06	2.37E-06	2	51.85	41.49	1.00
Naphthalene	C3-v0	3.74E-05	3.70E-05	3.99E-05	3.52E-05	1	6.36	7.20	1.00
Nickel	C3-v0	7.60E-06	6.32E-06	1.33E-05	3.16E-06	1	68.51	77.52	1.00
Phenanthrene	C3-v0	6.37E-07	5.14E-07	9.03E-07	4.93E-07	1	36.34	41.12	1.00
Phenol	C3-v0	1.43E-05	1.47E-05	1.48E-05	1.33E-05	1	5.81	6.57	0.00
Pyrene	C3-v0	1.19E-07	9.63E-08	2.13E-07	4.84E-08	1	71.00	80.34	1.00
Toluene	E3-v0	1.62E-04	1.61E-04	1.69E-04	1.55E-04	1	4.30	4.87	0.00
Xylene (Total)	E3-v0	3.74E-04	3.76E-04	3.76E-04	3.72E-04	1	0.55	0.63	0.00
Zinc	A3-v0	1.53E-05	1.45E-05	1.80E-05	1.35E-05	1	15.37	17.39	1.00

Table D-26a. Summary of Data for Emission Factor Development – Gas Turbines with Duct Burners Firing Natural Gas, Refinery Fuel Gas, and Liquefied Petroleum Gas Controlled with Selective Catalytic Reduction and Carbon Monoxide Oxidation Catalyst

Substance	CARB Rating	Emission Factor (lb/MMcf)				Tests	RSD, %	Uncer-tainty, %	Detect Ratio
		Mean	Median	Maximum	Minimum				
Arsenic	B3-v0	1.70E-02	1.71E-02	1.79E-02	1.61E-02	1	5.27	5.96	0.00
Beryllium	B3-v0	3.40E-03	3.43E-03	3.57E-03	3.21E-03	1	5.28	5.97	0.00
Cadmium	B3-v0	7.41E-03	6.85E-03	8.94E-03	6.44E-03	1	18.06	20.43	0.40
Copper	B3-v0	4.08E-02	1.88E-02	8.74E-02	1.61E-02	1	99.07	112.11	0.87
Lead	B3-v0	6.82E-02	6.85E-02	7.16E-02	6.44E-02	1	5.25	5.94	0.00
Manganese	B3-v0	1.75E-01	9.89E-02	3.71E-01	5.58E-02	1	97.56	110.40	1.00
Nickel	B3-v0	2.78E-01	9.70E-02	6.60E-01	7.79E-02	1	118.86	134.50	1.00
Phenol	C3-v1	5.80E-02	2.31E-02	1.45E-01	5.55E-03	1	131.32	148.60	1.00
Selenium	B3-v0	1.70E-02	1.71E-02	1.79E-02	1.61E-02	1	5.27	5.96	0.00
Zinc	B3-v0	4.12E-01	4.08E-01	6.80E-01	1.47E-01	1	64.69	73.20	1.00

Table D-26b. Summary of Data for Emission Factor Development – Gas Turbines with Duct Burners Firing Natural Gas, Refinery Fuel Gas, and Liquefied Petroleum Gas Controlled with Selective Catalytic Reduction and Carbon Monoxide Oxidation Catalyst

Substance	CARB Rating	Emission Factor (lb/MMBtu)				Tests	RSD, %	Uncer-tainty, %	Detect Ratio
		Mean	Median	Maximum	Minimum				
Arsenic	B3-v0	8.95E-06	9.00E-06	9.40E-06	8.46E-06	1	5.25	5.94	0.00
Beryllium	B3-v0	1.79E-06	1.80E-06	1.88E-06	1.69E-06	1	5.26	5.95	0.00
Cadmium	B3-v0	3.89E-06	3.60E-06	4.70E-06	3.39E-06	1	18.07	20.45	0.40
Copper	B3-v0	2.14E-05	9.89E-06	4.59E-05	8.46E-06	1	99.09	112.13	0.87
Lead	B3-v0	3.58E-05	3.60E-05	3.76E-05	3.39E-05	1	5.23	5.92	0.00
Manganese	B3-v0	9.21E-05	5.20E-05	1.95E-04	2.93E-05	1	97.60	110.45	1.00
Nickel	B3-v0	1.46E-04	5.09E-05	3.47E-04	4.09E-05	1	118.88	134.52	1.00
Phenol	C3-v1	3.05E-05	1.21E-05	7.65E-05	2.91E-06	1	131.46	148.76	1.00
Selenium	B3-v0	8.95E-06	9.00E-06	9.40E-06	8.46E-06	1	5.25	5.94	0.00
Zinc	B3-v0	2.16E-04	2.14E-04	3.58E-04	7.75E-05	1	64.70	73.22	1.00

Table D-27a. Summary of Data for Emission Factor Development – Gas Turbines with No Duct Burners Firing Refinery Fuel Gas Controlled with Carbon Monoxide Oxidation Catalyst

Substance	CARB Rating	Emission Factor (lb/MMcf)				Tests	RSD, %	Uncer-tainty, %	Detect Ratio
		Mean	Median	Maximum	Minimum				
Acetaldehyde	C3-v0	2.18E-02	2.22E-02	2.65E-02	1.67E-02	1	22.53	25.49	1.00
Arsenic	B3-v0	4.09E-03	4.15E-03	4.18E-03	3.95E-03	1	3.09	3.49	0.00
Benzene	C3-v0	1.49E-01	1.51E-01	1.53E-01	1.44E-01	1	3.34	3.78	0.00
Beryllium	B3-v0	2.05E-03	2.08E-03	2.08E-03	1.98E-03	1	2.78	3.14	0.00
Cadmium	B3-v0	7.41E-03	5.21E-03	1.29E-02	4.15E-03	1	64.24	72.70	1.00
Chromium (Hex)	C3-v0	2.04E-03	2.04E-03	2.05E-03	2.02E-03	1	0.70	0.79	0.00
Chromium (Total)	C3-v0	1.84E-02	1.01E-02	3.93E-02	5.93E-03	1	98.65	111.63	0.82
Copper	B3-v0	5.78E-02	5.49E-02	9.72E-02	2.12E-02	1	65.90	74.57	1.00
Formaldehyde	C3-v0	8.41E-01	8.36E-01	8.90E-01	7.97E-01	1	5.57	6.31	1.00
Hydrogen Sulfide	A3-v0	1.63E-01	1.64E-01	1.67E-01	1.58E-01	1	3.06	3.46	0.00
Lead	B3-v0	3.99E-02	4.15E-02	4.18E-02	3.64E-02	1	7.62	8.62	0.30
Manganese	B3-v0	1.80E-01	1.45E-01	3.40E-01	5.55E-02	1	80.76	91.39	1.00
Mercury	A3-v0	2.15E-02	1.55E-02	3.63E-02	1.27E-02	1	59.94	67.83	1.00
Nickel	B3-v0	2.33E-01	2.64E-01	2.86E-01	1.48E-01	1	31.93	36.13	1.00
Phenol	C3-v0	9.41E-03	5.99E-03	1.72E-02	5.07E-03	1	71.54	80.95	1.00
Selenium	B3-v0	5.42E-03	4.18E-03	7.93E-03	4.15E-03	1	40.11	45.39	0.00
Toluene	E3-v1	1.09E+00	4.34E-01	2.58E+00	2.56E-01	1	118.63	134.23	1.00
Xylene (Total)	E3-v1	3.14E+00	3.39E-01	8.85E+00	2.33E-01	1	157.44	178.16	1.00
Zinc	B3-v0	6.99E+00	8.23E+00	9.17E+00	3.56E+00	1	42.95	48.60	1.00

Table D-27b. Summary of Data for Emission Factor Development – Gas Turbines with No Duct Burners Firing Refinery Fuel Gas Controlled with Carbon Monoxide Oxidation Catalyst

Substance	CARB Rating	Emission Factor (lb/MMBtu)				Tests	RSD, %	Uncer-tainty, %	Detect Ratio
		Mean	Median	Maximum	Minimum				
Acetaldehyde	C3-v0	1.56E-05	1.58E-05	1.89E-05	1.19E-05	1	22.53	25.49	1.00
Arsenic	B3-v0	2.92E-06	2.96E-06	2.98E-06	2.81E-06	1	3.09	3.49	0.00
Benzene	C3-v0	1.06E-04	1.07E-04	1.09E-04	1.02E-04	1	3.34	3.78	0.00
Beryllium	B3-v0	1.46E-06	1.48E-06	1.49E-06	1.41E-06	1	2.78	3.14	0.00
Cadmium	B3-v0	5.28E-06	3.71E-06	9.18E-06	2.96E-06	1	64.24	72.70	1.00
Chromium (Hex)	C3-v0	1.45E-06	1.45E-06	1.46E-06	1.44E-06	1	0.70	0.79	0.00
Chromium (Total)	C3-v0	1.31E-05	7.19E-06	2.80E-05	4.23E-06	1	98.65	111.63	0.82
Copper	B3-v0	4.12E-05	3.91E-05	6.93E-05	1.51E-05	1	65.90	74.57	1.00
Formaldehyde	C3-v0	5.99E-04	5.96E-04	6.34E-04	5.68E-04	1	5.57	6.31	1.00
Hydrogen Sulfide	A3-v0	1.16E-04	1.17E-04	1.19E-04	1.12E-04	1	3.06	3.46	0.00
Lead	B3-v0	2.84E-05	2.96E-05	2.98E-05	2.59E-05	1	7.62	8.62	0.30
Manganese	B3-v0	1.29E-04	1.03E-04	2.43E-04	3.96E-05	1	80.76	91.39	1.00
Mercury	A3-v0	1.53E-05	1.11E-05	2.59E-05	9.05E-06	1	59.94	67.83	1.00
Nickel	B3-v0	1.66E-04	1.88E-04	2.04E-04	1.05E-04	1	31.93	36.13	1.00
Phenol	C3-v0	6.71E-06	4.27E-06	1.22E-05	3.62E-06	1	71.54	80.95	1.00
Selenium	B3-v0	3.86E-06	2.98E-06	5.65E-06	2.96E-06	1	40.11	45.39	0.00
Toluene	E3-v1	7.77E-04	3.10E-04	1.84E-03	1.83E-04	1	118.63	134.23	1.00
Xylene (Total)	E3-v1	2.24E-03	2.42E-04	6.31E-03	1.66E-04	1	157.44	178.16	1.00
Zinc	B3-v0	4.98E-03	5.87E-03	6.54E-03	2.54E-03	1	42.95	48.60	1.00

[This page intentionally left blank.]