WESTON PROJECT NO. 12257.001.001
EMISSIONS TEST REPORT
COGENTRIX OF ROCKY MOUNT
ROCKY MOUNT, NORTH CAROLINA

JANUARY 2000

INFORMATION COLLECTION REQUEST
ASSESSMENT OF SPECIATED MERCURY
EMISSIONS FROM A COAL-FIRED BOILER

Prepared for:

COGENTRIX
4453 Crossings Blvd.
King George, Virginia 23875

Prepared by:

ROY F. WESTON, INC.
1400 Weston Way
P.O. Box 2653
West Chester, Pennsylvania 19380
(610) 701-3000

TABLE OF CONTENTS

Section **Page**

1. INTRODUCTION 1-1

1.1 SUMMARY OF THE TEST PROGRAM 1-1

1.2 TEST PROGRAM OBJECTIVES 1-2

1.3 SAMPLE LOCATIONS 1-2

1.4 POLLUTANTS MEASURED 1-2

1.5 TEST PROGRAM KEY PERSONNEL 1-4

2. PLANT AND SAMPLING LOCATION DESCRIPTIONS 2-1

2.1 COGENTRIX OF ROCKY MOUNT FACILITY UNIT NO. 2B OVERVIEW 2-1

2.2 PROCESS SOLID SAMPLING LOCATIONS AND SAMPLING PROCEDURES 2-3

2.2.1 Unit No. 2B Coal Sampling 2-3

2.3 FLUE GAS SAMPLING LOCATIONS 2-3

2.3.1 Unit No. 2B FGD Inlet 2-3

2.3.2 Baghouse Outlet 2-3

3. SUMMARY AND DISCUSSION OF TEST RESULTS 3-1

3.1 SAMPLING/TESTING, ANALYTICAL AND QC MATRICES 3-1

3.2 PRESENTATION OF RESULTS 3-1

3.2.1 Mercury Speciation Test Results 3-1

3.2.1.1 Unit No. 2B 3-7

3.2.2 Process Solid Sample Stream Results 3-7

3.2.3 Unit Operation and Key Operational Parameters 3-9

3.2.3.1 Unit Operation During Testing 3-9

3.2.3.2 Process Control Data 3-9

3.3 TESTING PROBLEMS OR MODIFICATIONS 3-9

4. SAMPLING AND ANALYTICAL PROCEDURES 4-1

4.1 DESCRIPTION OF SAMPLING EQUIPMENT 4-1

4.1.1 Ontario Hydro Mercury Speciation Method 4-1

4.2 CO_2 AND O_2 SAMPLING EQUIPMENT 4-2

4.3 SAMPLING PROCEDURES 4-2

4.3.1 Preliminary Tests 4-2

TABLE OF CONTENTS

Section **Page**

4.4 ANALYTICAL PROCEDURES 4-6
4.4.1 Sample Analyses 4-6
4.4.1.1 Ontario hydro Sample Analyses 4-6
4.4.1.2 Coal Sample Analyses 4-6
4.4.1.2.1 Preparation 4-6
4.4.1.2.2 Chlorine 4-6
4.4.1.2.3 Mercury 4-11
4.4.1.2.4 Ash, Sulfur and Heating Value 4-11

5. QUALITY ASSURANCE SUMMARY 5-1
5.1 STACK SAMPLE QA/QC RESULTS 5-1
5.1.1 Stack Sample Collection and Calculations 5-1
5.1.2 Sample Chain of Custody 5-3
5.1.3 Stack Emission Blank Sample Results 5-3
5.1.4 Ontario Hydro Analysis Holding Times 5-4
5.1.5 Internal Field Audit Procedures 5-5
5.1.6 External Performance Evaluation Audits 5-5
5.1.7 Stack Emissions QA/QC Conclusions 5-5
5.1.8 Ontario Hydro Sample Analysis 5-5
5.1.9 Ontario Hydro Sample Analysis QA/QC Conclusions 5-5
5.2 PROCESS SOLID SAMPLE QA/QC RESULTS 5-6
5.2.1 Holding Times 5-6
5.2.2 Process Sample QA/QC Conclusions 5-6
5.3 COMPLETENESS 5-6

APPENDIX A DETAILED TEST DATA AND TEST RESULTS
APPENDIX B PROCESS OPERATIONS, FACILITY CEMS/FGD/BAGHOUSE DATA
APPENDIX C RAW TEST DATA
APPENDIX D LABORATORY ANALYTICAL REPORTS
COAL SAMPLES ANALYTICAL REPORT
ONTARIO HYDRO SAMPLES ANALYTICAL REPORT
APPENDIX E SAMPLE CALCULATIONS
APPENDIX F EQUIPMENT CALIBRATION RECORDS
APPENDIX G TECHNICAL SYSTEM AUDIT

LIST OF FIGURES

Title **Page**

Figure 2-1 Process Schematic and Sampling/Testing Location Unit No. 2B 2-6

Figure 2-2 Unit No. 2B FGD Inlet Duct Test Site - Port and Traverse Point Locations 2-8

Figure 2-3 Unit No. 2B Baghouse Outlet – Port and Traverse Point Locations 2-9

Figure 4-1 FGD Inlet Test Location Ontario Hydro Sampling Train 4-3

Figure 4-2 Baghouse Outlet Test Location Ontario Hydro Sampling Train 4-4

Figure 4-3 EPA Method 3 – Dry Gas Stream Composition Sampling Train 4-5

Figure 4-4 Preparation Procedures for Ontario Hydro Sampling train 4-7

Figure 4-5 Sampling Procedures for Ontario Hydro Train 4-8

Figure 4-6 Sample Recovery Procedures for Ontario Hydro Method 4-9

Figure 4-7 Analytical Procedure for Ontario Hydro Sampling Train 4-10

LIST OF TABLES

Title **Page**

Table 1-1 COGENTRIX of Rocky Mount Unit No. 2B Process Solid and Flue Gas Streams with Pollutants/Parameters 1-3

Table 3-1 Sampling/Testing, Analytical, and QC Plan Unit No.2B Clean Coal Feed 3-2

Table 3-2 Sampling/Testing, Analytical, and QC Plan Unit No. 2B FGD Inlet and Baghouse Outlet 3-3

Table 3-3 Comparison of Mercury Speciation to Total Mercury Results Unit No. 2B 3-4

Table 3-4 Summary of Mercury Speciation Test Data and Test Results

Unit No. 2B FGD Inlet 3-5

Table 3-5 Summary of Mercury Speciation Test Data and Test Results Unit No. 2B Baghouse Outlet 3-6

Table 3-6 Summary of Coal Sample Results Unit No. 2B Coal Feed Samples 3-8

Table 3-7 Summary of Process Data Unit No. 2B 3-10

Table 5-1 Stack Emission Sampling Field QA/QC Results 5-2

1. INTRODUCTION

1.1 SUMMARY OF THE TEST PROGRAM

The U.S. Environmental Protection Agency (EPA), Office of Air Quality Planning and Standards (OAQPS) has undertaken a program to acquire information related to mercury emissions from electric utility steam generating units. As part of this Information Collection Request (ICR), EPA has selected certain utilities for emissions testing to characterize speciated mercury emissions and the effectiveness of available control measures on such emissions.

The Cogentrix of Rocky Mount (COGENTRIX) facility located in Rocky Mount, North Carolina was selected as one of the ICR study sites. Mercury speciation sampling was performed on Unit No. 2B at the COGENTRIX Rocky Mount facility using the Ontario Hydro method. During the ICR test program mercury speciation testing was performed on the inlet and outlet of the dry flue gas desulfurization (FGD) and baghouse of Unit No. 2B. Representative coal samples were collected in conjunction with each Ontario Hydro test.

The work was completed by Roy F. Weston, Inc., (WESTON). The mercury speciation sampling activities were performed by WESTON, coal samples were collected by COGENTRIX, the analysis of the coal and Ontario Hydro method samples were performed by Philip Analytical Services. The test program was performed during the period of November 16 through 18 1999.

This test report presents the test data and test results of the mercury speciation sampling program performed on Unit No. 2B at the COGENTRIX of Rocky Mount facility and contains all test results and discussions. Appendices of the detailed test data and test results, raw test data, process data, laboratory reports, equipment calibration records and sample calculations are also provided. This report format follows EPA's Emissions Measurement Center (EMC) guideline document (GD-043) titled, Preparation and Review of Emission Test Reports which is required for ICR report submittals.

1.2 TEST PROGRAM OBJECTIVES

During the test program mercury emissions testing using the Ontario Hydro method were performed on the inlet and outlet of the FGD and baghouse serving Unit No. 2B. Representative samples of the coal were sampled in conjunction with the emissions testing.

The specific objectives of this test program were as follows:

- Characterize the emissions of particulate-bound, elemental and oxidized mercury from the coal fired boiler.
- Simultaneously measure concentrations and mass rates of speciated mercury at the inlet and outlet of the FGD and baghouse on Unit No. 2B.
- Obtain and analyze representative samples of the coal for the purpose of determining mercury, heating value, ash content, sulfur and chlorine levels.
- Document corresponding boiler, FGD and baghouse operations along with facility continuous emission monitoring system (CEMS) data.

A Site-Specific Sampling/Testing, Analytical and QA/QC Plan and Quality Assurance Project Plan (QAPP) dated May 1999 were developed for the ICR test program performed on Unit No. 2B.

1.3 SAMPLE LOCATIONS

Representative samples from the following solid stream were collected and analyzed during the test program:

- Coal Feed.

Flue gas stream emission samples were collected at the following locations:

- Unit No. 2B FGD Inlet.
- Unit No. 2B Baghouse Outlet.

1.4 POLLUTANTS MEASURED

Table 1-1 presents a summary of process solid and flue gas streams and the associated pollutants and parameters measured during the test program.

Table 1-1

COGENTRIX of Rocky Mount
Unit No. 2B
Process Solid and Flue Gas Streams
with Pollutants/Parameters

Location/Stream Type	Pollutants or Parameters	Frequency
Unit No. 2B Coal Feed	Heating value Ash content Moisture Mercury (Hg) content Chlorine (Cl) content Sulfur content	One composite sample per run (total of 3) in conjunction with flue gas sampling on Unit No. 2B.
Unit No. 2B FGD Inlet and Baghouse Outlet	Particulate bound and vapor phase mercury (including oxidized and elemental mercury speciation of vapor phase).	Inlet and outlet sampling by Ontario Hydro method on Unit No. 2B.

1.5 TEST PROGRAM KEY PERSONNEL

The key personnel who coordinated and performed the test program, their project responsibilities and their phone numbers are:

Contact Name	Project Responsibility	Telephone No.	Facsimile No.
COGENTRIX			
Mr. Tracy Patterson	Program Coordinator	(804) 541-4246	(804) 541-7961
EPA			
Mr. William Grimley	ICR Program Manager	(919) 541-1065	(919) 541-1039
WESTON			
Mr. Jeff O'Neill	Project Manager	(610) 701-7201	(610) 701-7401
Mr. Jack Mills	Test Team Leader	(610) 701-7245	(610) 701-7401
PHILIP			
Mr. Vaughn O'Neill	Laboratory Analyst	(610) 921-8833	(610) 921-9667
Ms. Pamela Peters	Technical Representative	(610) 921-8833	(610) 921-9661

2. PLANT AND SAMPLING LOCATION DESCRIPTIONS

2.1 COGENTRIX OF ROCKY MOUNT FACILITY UNIT NO. 2B OVERVIEW

The COGENTRIX of Rocky Mount, Inc. facility is located in Rocky Mount, North Carolina. The facility is a cogeneration plant which combusts fuel in a stoker-fired boiler to produce steam. A portion of the steam is sold to an industrial host for use in their manufacturing process. The remainder of the steam is used to drive a turbine-generator to provide electricity which is sold to North Carolina Power. The facility received the original air permit in 1989. The Rocky Mount facility consists of two units. Each unit is comprised of two boilers supplying steam to one turbine-generator.

The plant was originally permitted under the requirements of PSD and emission limits were calculated using best available control technology (BACT). The facility is also subject to Standards of Performance for New Stationary Sources, Subpart Da.

The primary emission source of this facility are the stoker-fired boilers. The boilers are the traveling grate, overfeed, stoker boilers which were manufactured by ABB/Combustion Engineering. Each boiler is rated at approximately 375 million Btu (MMBtu) heat input per hour. The combustion gas path includes mechanical ash collectors for cinder reinjection into the combustion zone. The combustion gases are treated for sulfur dioxide reduction by spraying atomized recycle ash/lime slurry into the gaspath. The combustion gas passes through a pulse-jet fabric filter baghouse for particulate control before being exhausted to the smokestack. For this facility, the combustion gases from both unit boilers exhaust to a common stack.

The continuous emission monitoring system (CEMS) measures the effluent concentration of sulfur dioxide (SO_2) and oxygen (O_2) in the gas stream at the outlet location. In addition, the inlet duct to the FGD is configured to monitor and record gaseous concentrations of oxides of nitrogen (NO_X), SO_2, and O_2.

Figure 2-1 presents a schematic of the Unit No. 2B boiler and pollution control equipment.

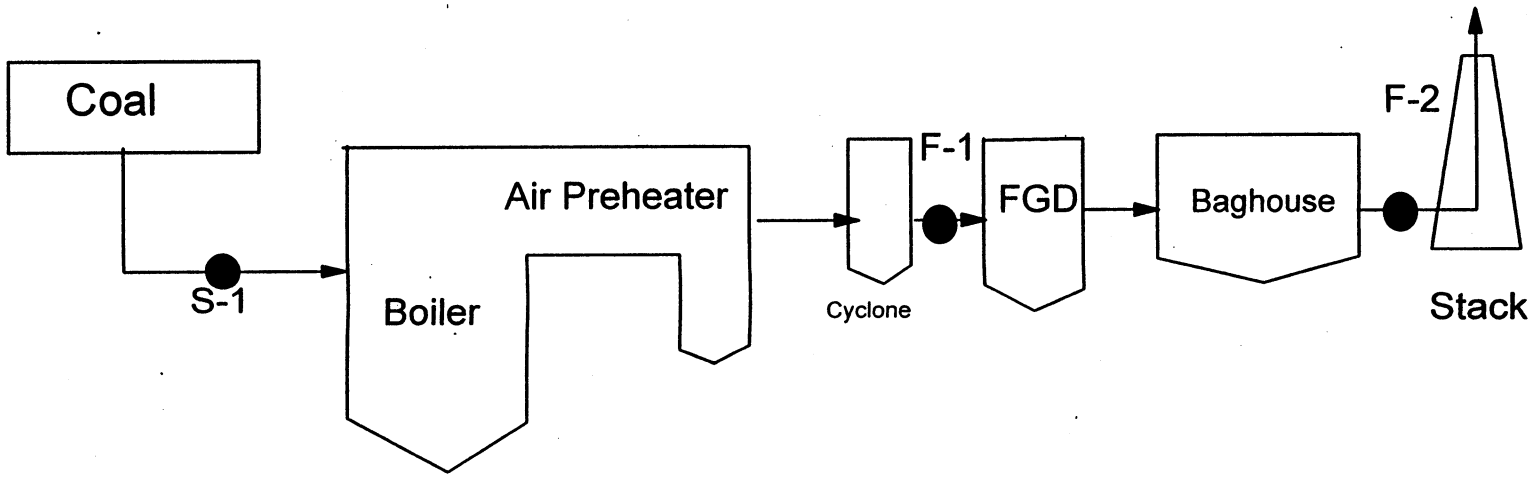

Sample Point Number	Sample Identification
SOLIDS	
S-1	Clean Coal Feed
Flue Gas	
F-1	FGD Inlet
F-2	Baghouse Outlet

FIGURE 2-1
PROCESS SCHEMATIC AND SAMPLING/TESTING LOCATIONS
COGENTRIX-UNIT NO. 2B

c:\airteam\trains\AMMONIA.DRW

2.2 PROCESS SOLID SAMPLING LOCATIONS AND SAMPLING PROCEDURES

2.2.1 Unit No. 2B Coal Sampling

Samples of the coal feed stream were collected and composited during each test run. The coal is introduced to the boiler by a batch scale which introduces ~300 lb per load at a rate of once every 45 to 60 seconds. The batch fed coal loads into five (5) feeders. A scoop sampler was used to obtain coal samples directly from the batch scale once every 15 minutes. This is the last point in the coal feed system at which representative coal samples can be obtained. Following test completion the individual grab samples were composited on a per test run basis and riffled onsite.

2.3 FLUE GAS SAMPLING LOCATIONS

2.3.1 Unit No. 2B FGD Inlet

The test site at the FGD inlet is located on the vertical 6′ by 6′ square duct. A total of five (5) 6" ID test ports are located horizontally across one side of the duct. The ports are located 12′ 6″ (2.1 diameters) downstream from the cyclone collector outlet and 10′ 2″ (1.7 diameters) upstream of the elbow leading to the FGD.

A total of five traverse points per port (total of 25 points) were sampled. See Figure 2-2 for a schematic of the FGD inlet test site.

2.3.2 Baghouse Outlet

A total of five (5) 4″ ID test ports are in place on the 57″ deep by 66″ high rectangular duct. The test ports are located 94″ (1.54 diameters) downstream from the nearest downstream disturbance and 60″ (1.0 diameter) from the nearest upstream distance.

A total of 5 points per port (25 total) were sampled. See Figure 2-3 for a schematic of the baghouse outlet test location.

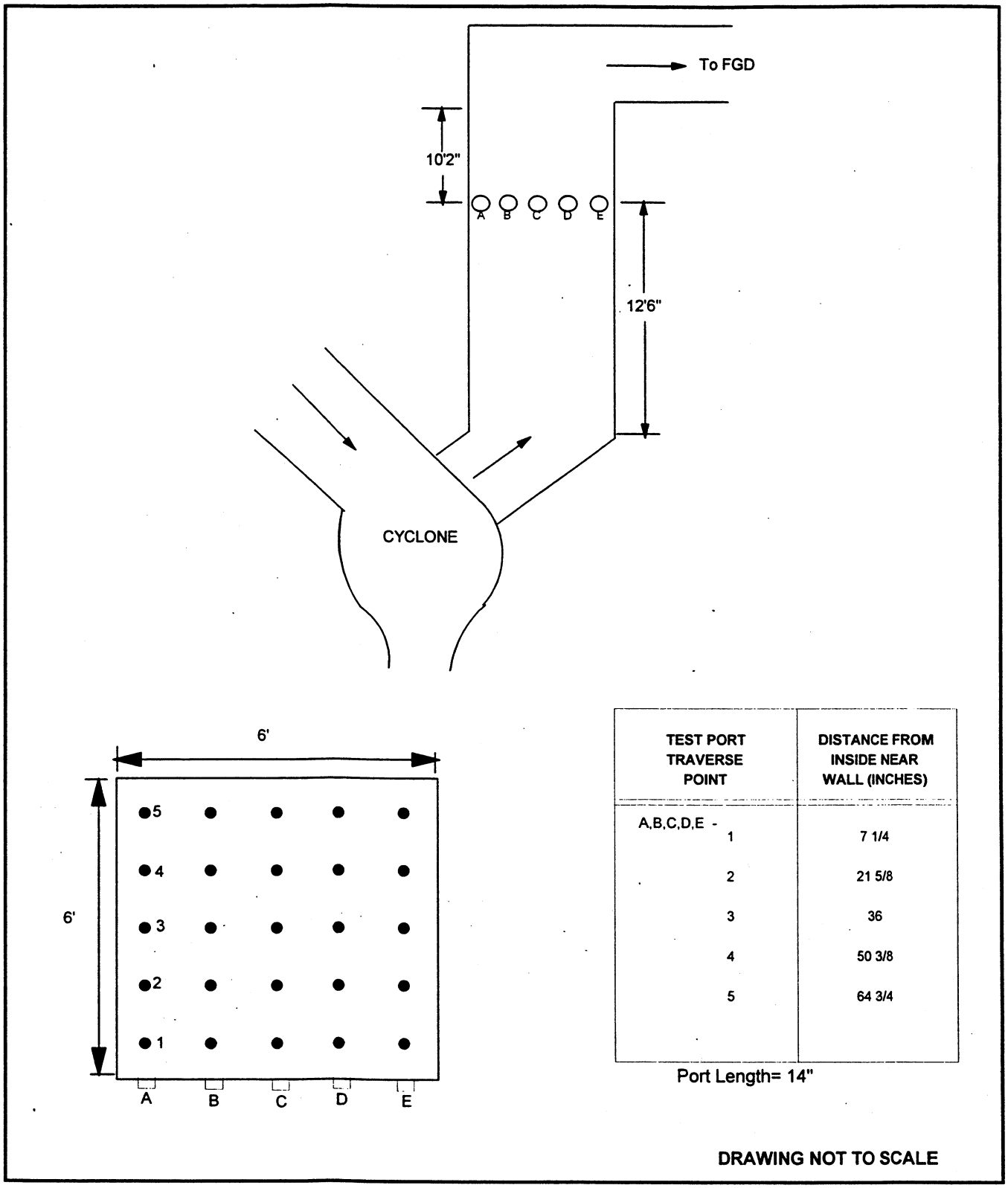

TEST PORT TRAVERSE POINT	DISTANCE FROM INSIDE NEAR WALL (INCHES)
A,B,C,D,E - 1	7 1/4
2	21 5/8
3	36
4	50 3/8
5	64 3/4

Port Length= 14"

FIGURE 2-2
UNIT 2B FGD INLET DUCT TEST SITE
PORT AND TRAVERSE POINT LOCATIONS

DOE04-D20

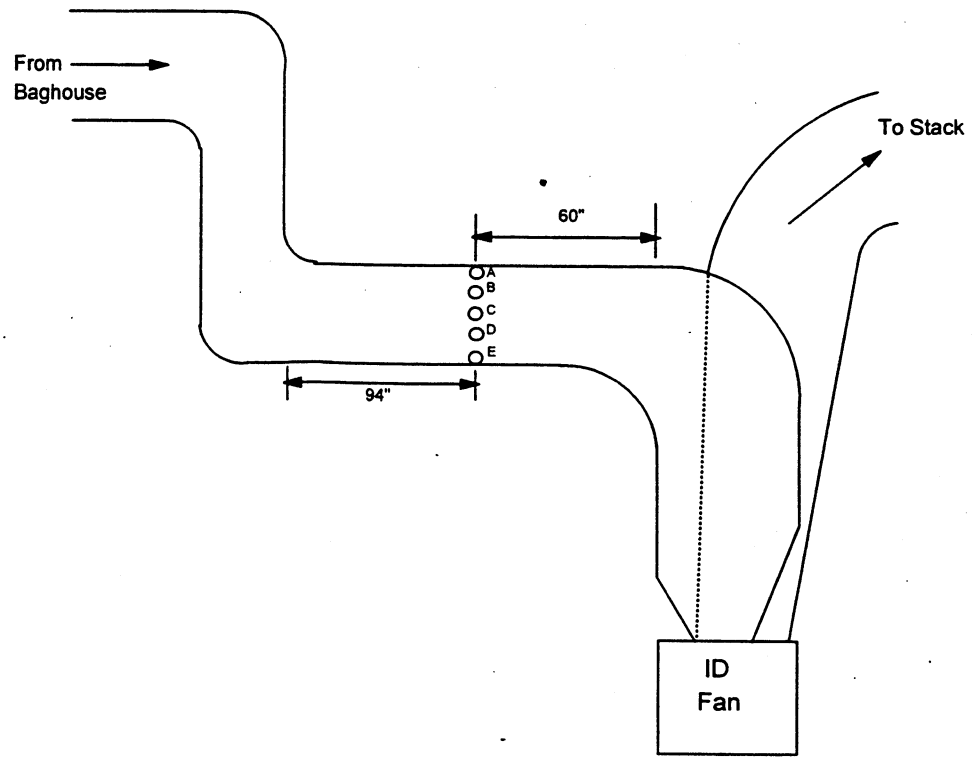

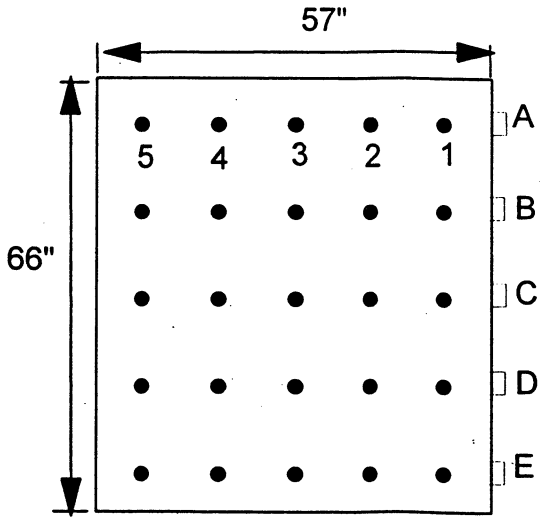

TEST PORT TRAVERSE POINT	DISTANCE FROM INSIDE NEAR WALL (INCHES)
A,B,C,D,E - 1	5 3/4
2	17 1/8
3	28 1/2
4	39 7/8
5	51 1/4

Port Length=14"

DRAWING NOT TO SCALE

FIGURE 2-3
UNIT 2B BAGHOUSE OUTLET
PORT AND TRAVERSE POINT LOCATIONS

DOE04-D20

3. SUMMARY AND DISCUSSION OF TEST RESULTS

3.1 SAMPLING/TESTING, ANALYTICAL AND QC MATRICES

The detailed sampling/testing, analytical and QC matrices for this survey are presented on Tables 3-1 and 3-2 for the coal, and flue gas sampling locations, respectively. Each table specifies the following components:

- Sampling point identification and description.
- Test objective, number and length of test runs performed, and samples/data collected.
- Parameters measured.
- Sampling or monitoring methods employed, including sample preservation technique.
- Maximum sample holding time.
- Sample preparation/extraction and analysis methods applied.
- Sampling and analytical program design (i.e., number of samples collected/analyzed by type and method). This includes the number, or frequency and type, of QC samples analyzed for each parameter.
- Laboratory that analyzed each type of sample.

3.2 PRESENTATION OF RESULTS

3.2.1 Mercury Speciation Test Results

A summary of the Ontario Hydro method mercury speciation test results are presented on Tables 3-3, 3-4, and 3-5 for Unit No. 2B.

Table 3-3 presents the measured mercury concentrations in micrograms per cubic meter (ug/m^3) for each test run and provides the percent of particulate, oxidized and elemental mercury in comparison to the total mercury.

Tables 3-4 and 3-5 presents the mercury concentrations and mass rate values for particulate, oxidized, elemental and total mercury for each individual test run along with the measured

Table 3-1

Sampling/Testing, Analytical, and QC Plan
Unit No. 2B — Clean Coal Feed

No. of Test Runs: 3

Test Objective: Determine total mercury and chlorine content of as-fired coal.

Sampling Objective: Collect a representative sample.

Parameters to be Determined:	**Mercury**	**Chlorine**	**Heating Value**	**Ash Content**	**Sulfur Content**	**Mass Flow Rate**
Sampling or Monitoring Method:	Representative sample increments were obtained from the batch scale once every 15 minutes during each test period. Samples stored in air-tight, sample containers					Gravimetric readings from batch scale
Sample Preparation/Extraction and Analysis Method(s):	ASTM D2013 and EPA Method 7471	ASTM E776 and EPA Method 300	ASTM D3286	ASTM D3174	ASTM D4239	
Maximum Holding Time (days):	28	28	28	28	28	NA
Sampling or Monitoring Design:						
Total No. of Samples	3	3	3	3	3	NA
Site Blanks	0	0	0	0	0	NA
Trip Blanks	0	0	0	0	0	NA
Lab Blanks	1	1	1	1	1	NA
Blank Spikes[2]	0	0	0	0	0	NA
Replicates[3]	1 batch	1/batch	1/batch	1/batch	1/batch	NA
QC Spikes[4]	1/batch[1]	1/batch	1/batch	1/batch	1/batch	NA
Total No. of Samples Analyzed	6	6	6	6	6	NA
Analytical Laboratory:	Philip Analytical Services					NA

Notes:
[1]A batch consists of a maximum of 20 samples.
[2]A blank spike (or method spike) is a sample of reagent-grade water spiked with the analyte(s) of interest that is prepared and analyzed with the associated sample batch.
[3]This indicates that a duplicate analysis is made on one or more samples as a QC mechanism to measure analytical precision.
[4]A sample of similar matrix is spiked with a known amount of the analyte(s) of interest to determine percent recovery.

Table 3-2

Sampling/Testing, Analytical, and QC Plan
Unit No. 2B FGD Inlet and Baghouse Outlet

No. of Test Runs: 3 per unit
Test Objective: Perform mercury speciation sampling at inlet and outlet of FGD and baghouse.
Sampling Objective: Collect a representative sample.

Parameters to be Determined:	Speciated Mercury
Sampling or Monitoring and Preservation Method(s)	Ontario Hydro Method
Sample Preparation/Extraction and Analysis Method(s):	Ontario Hydro Method
Maximum Holding Time (days):	45
Sampling or Monitoring Design:	
Length of Test:	$\geq$ 120 min
Sample Size	1 to 2.5 m^3
Total No. of Samples	3 at inlet and outlet
Site/Reagent Blanks	Minimum of 1 per sample type
Train Blanks	1 per test location (total of 2)
Lab Blanks	1 per batch[1]
Blank Spikes[2]	1 per batch
Replicates[3]	All samples
Total No. of Samples Analyzed[4]	~90
Analytical Laboratory:	Philip Analytical Services

[1]A batch consists of a maximum of 10 samples.
[2]A blank spike (or method spike) is a sample of reagent-grade water spiked with the analyte(s) of interest that is prepared and analyzed with the associated sample batch.
[3]This indicates that a duplicate analysis is made on one or more samples as a QC mechanism to measure analytical precision.
[4]Approximate number of total samples and individual fractions, duplicates and other QC samples.

Note: The facility CEMS measured sulfur dioxide (SO_2) and oxygen (O_2) on the baghouse outlet and SO_2, oxides of nitrogen (NO_x) and O_2 at the FGD inlet..

TABLE 3-3
COMPARISON OF MERCURY SPECIATION TO TOTAL MERCURY RESULTS
UNIT NO. 2B

Mercury Species	Unit No. 2B Inlet								
	Run 1		Run 2		Run 3		Average
	(ug/m^3)	% of Total	(ug/m^3)	% of Total	(ug/m^3)	% of Total	% of Total
Particulate Bound Mercury Emissions	2.03	90.11	1.99	78.21	1.85	87.83	85.38
Oxidized Mercury Emissions	< 0.05	2.20	0.17	6.61	< 0.06	2.86	3.89
Elemental Mercury Emissions	< 0.17	7.69	0.39	15.18	< 0.20	9.32	10.73
Total Mercury Emissions	2.25	100.00	2.54	100.00	2.11	100.00	100.00

Mercury Species	Unit No. 2B Outlet								
	Run 1		Run 2		Run 3		Average
	(ug/m^3)	% of Total	(ug/m^3)	% of Total	(ug/m^3)	% of Total	% of Total
Particulate Bound Mercury Emissions	0.05	20.35	0.03	11.07	< 0.014	6.25	12.56
Oxidized Mercury Emissions	< 0.04	17.70	< 0.05	19.76	< 0.05	20.83	19.43
Elemental Mercury Emissions	< 0.15	61.95	< 0.16	69.17	< 0.17	72.92	68.01
Total Mercury Emissions	0.25	100.00	0.24	100.00	0.23	100.00	100.00

TABLE 3-4
COGENTRIX - ROCKY MOUNT, NC
SUMMARY OF MERCURY SPECIATION TEST DATA AND TEST RESULTS
UNIT NO. 2B INLET

TEST DATA:						
Test run number		1	2		3	
Location			Unit No. 2B Inlet			
Test date		11/17/99	11/17/99		11/18/99	
Test time period		0815-1055	1247-1602		0745-1011	
PROCESS DATA:						
Unit Load, MW		62.7	62.0		62.6	
Coal feed rate, lb/hr.		28700	28600		27400	
Coal Btu content, Btu/lb.		13200	13290		13310	
Heat Input, 10^6 Btu/hr		378.8	380.1		364.7	
GAS STREAM VELOCITY AND VOLUMETRIC FLOW DATA:						
Avg. gas stream velocity, ft./sec.		57.5	55.8		56.5	AVERAGE
Avg. gas stream volumetric flow, wacf/min.		122381	118905		120329	120538
Avg. gas stream volumetric flow, dscf/min. (1)		73552	70970		71988	72170
PARTICULATE BOUND MERCURY EMISSIONS:						
Conc., ug/m^3		2.03	1.99		1.85	1.958
Conc., ug/Nm^3 (2)		2.18	2.13		1.99	2.100
Emission rate, lbs/10^{12} Btu.		1.48	1.39		1.37	1.41
Emission rate, lbs/hr		5.60E-04	5.28E-04		5.00E-04	5.29E-04
OXIDIZED MERCURY EMISSIONS:						
Conc., ug/m^3	<	0.05	0.17	<	0.06	0.09
Conc., ug/Nm^3 (2)	<	0.05	0.18	<	0.06	0.10
Emission rate, lbs/10^{12} Btu.	<	0.04	0.12	<	0.04	0.07
Emission rate, lbs/hr	<	1.37E-05	4.47E-05	<	1.52E-05	2.45E-05
ELEMENTAL MERCURY EMISSIONS:						
Conc., ug/m^3	<	0.17	0.39	<	0.20	0.25
Conc., ug/Nm^3 (2)	<	0.19	0.41	<	0.21	0.27
Emission rate, lbs/10^{12} Btu.	<	0.13	0.27	<	0.15	0.18
Emission rate, lbs/hr	<	4.78E-05	1.02E-04	<	5.30E-05	6.78E-05
TOTAL MERCURY EMISSIONS: (3)						
Conc., ug/m^3		2.25	2.54		2.11	2.30
Conc., ug/Nm^3 (2)		2.42	2.73		2.26	2.47
Emission rate, lbs/10^{12} Btu.		1.64	1.78		1.56	1.66
Emission rate, lbs/hr		6.21E-04	6.75E-04		5.68E-04	6.22E-04

(1) Standard conditions = 68 deg. F. (20 deg. C.) and 29.92 inches Hg (760mm Hg).
(2) Nm3 = Normal cubic meter (32 deg. F. (0 deg. C.) and 29.92 inches Hg (760mm Hg)).
(3) Non-detects included in total mercury catch value.

TABLE 3-5
COGENTRIX - ROCKY MOUNT, NC
SUMMARY OF MERCURY SPECIATION TEST DATA AND TEST RESULTS
UNIT NO. 2B OUTLET

TEST DATA:							
Test run number		1		2		3	
Location				Unit No. 2B Outlet			
Test date		11/17/99		11/17/99		11/18/99	
Test time period		0815-1055		1246-1603		0746-1010	
PROCESS DATA:							
Unit Load, MW		62.7		62.0		62.6	
Coal feed rate, lb/hr.		28700		28600		27400	
Coal Btu content, Btu/lb.(as received)		13200		13290		13310	
Heat Input, 10^6 Btu/hr		378.8		380.1		364.7	
GAS STREAM VELOCITY AND VOLUMETRIC FLOW DATA:							
Avg. gas stream velocity, ft./sec.		74.9		73.9		73.8	AVERAGE
Avg. gas stream volumetric flow, wacf/min.		116969		115328		115227	115841
Avg. gas stream volumetric flow, dscf/min. (1)		79534		78161		78097	78597
PARTICULATE BOUND MERCURY EMISSIONS:							
Conc., ug/m^3		0.050		0.026	<	0.014	0.030
Conc., ug/Nm^3 (2)		0.054		0.028	<	0.015	0.032
Emission rate, lbs/10^{12} Btu.		3.94E-02		2.02E-02	<	1.14E-02	2.36E-02
Emission rate, lbs/hr		1.49E-05		7.67E-06	<	4.14E-06	8.91E-06
OXIDIZED MERCURY EMISSIONS:							
Conc., ug/m^3	<	0.04	<	0.05	<	0.05	0.05
Conc., ug/Nm^3 (2)	<	0.05	<	0.05	<	0.05	0.05
Emission rate, lbs/10^{12} Btu.	<	0.03	<	0.04	<	0.04	0.04
Emission rate, lbs/hr	<	1.30E-05	<	1.37E-05	<	1.38E-05	1.35E-05
ELEMENTAL MERCURY EMISSIONS:							
Conc., ug/m^3	<	0.15	<	0.16	<	0.17	0.16
Conc., ug/Nm^3 (2)	<	0.16	<	0.18	<	0.18	0.17
Emission rate, lbs/10^{12} Btu.	<	0.12	<	0.13	<	0.13	0.13
Emission rate, lbs/hr	<	4.54E-05	<	4.80E-05	<	4.83E-05	4.72E-05
TOTAL MERCURY EMISSIONS: (3)							
Conc., ug/m^3		0.25		0.24		0.23	0.24
Conc., ug/Nm^3 (2)		0.26		0.25		0.24	0.25
Emission rate, lbs/10^{12} Btu.		0.19		0.18		0.18	0.19
Emission rate, lbs/hr		7.32E-05		6.93E-05		6.63E-05	6.96E-05
TOTAL MERCURY REMOVAL EFFICIENCY:		88.21%		89.73%		88.34%	88.76%

(1) Standard conditions = 68 deg. F. (20 deg. C.) and 29.92 inches Hg (760mm Hg).
(2) Nm3 = Normal cubic meter (32 deg. F. (0 deg. C.) and 29.92 inches Hg (760mm Hg)).
(3) Non-detects included in total mercury catch value.

volumetric flow rates. Average values with the standard deviation (SDEV) and percent relative standard deviation (% RSD) have been calculated and are presented.

3.2.1.1 Unit No. 2B

For Unit No. 2B FGD Inlet an average of 85.4% of the total mercury measured is particulate bound mercury. On average the oxidized mercury was 3.9 percent of the total and the elemental mercury was 10.7 percent of the total mercury collected. At the Unit No. 2B baghouse outlet, elemented mercury comprised the highest of the total at 68 percent. The oxidized mercury was 19.4 percent of the total and the particulate bound mercury was 12.6 percent.

Based on the total mercury measurements the average removal efficiency for the FGD/baghouse was 88.8 percent with an average mass emission rate of 6.96×10^{-5} pound per hour.

The average total mercury emission rates for Unit No. 2B are 0.24 ug/m^3, 0.19 lbs/10^{12} Btu and 6.96×10^{-5} lb/hr.

3.2.2 Process Solid Sample Stream Results

Table 3-6 provides a summary of the analytical results obtained on the coal feed samples collected on Unit No. 2B.

For each parameter measured on the Unit No. 2B coal feed stream, the concentration or percent value is presented (on an as received basis) for each individual test run along with the average values.

Detailed analytical summaries are provided in Appendix D of this report.

Based on the mercury content of the coal (detection limit value of < 0.06 ppm) and the measured coal feed rate, the mass rate of mercury introduced to the boiler averaged ≤ 0.0017 lb/hr.

Table 3-6

Summary of Coal Sample Results
Unit No. 2B Coal Feed Samples

Parameter[1]	Test Run No.			Average
	1	2	3	
Mercury,ppm (mg/kg)	<0.06	<0.06	<0.06	<0.06
Chlorine, %	0.14	0.17	0.17	0.16
Heating value, Btu/lb	13200.	13290.	13310.	13267.
Ash, %	6.84	6.64	6.14	6.54
Sulfur, %	0.70	0.73	0.74	0.72
Moisture, %	4.50	4.37	4.43	4.43

(1) As received basis.

3.2.3 Unit Operation and Key Operational Parameters

This section describes the Unit No. 2B operations during the test program and provides the key operating parameters that were monitored and documented during testing.

3.2.3.1 Unit Operation During Testing

Operation of Unit No. 2B during testing was representative of normal daily operation at or near full load. Steady-state testing conditions were maintained during all test periods. The normal sootblowing activities were maintained on the boiler during testing.

3.2.3.2 Process Control Data

All key power generation process operating parameters and control data were recorded during each test period. FGD and baghouse operational indicators data were recorded by a data acquisition system. The facilities CEMS data acquisition system provided concentration values.

A summary of the key operating data is provided in Table 3-7 for Unit No. 2B. All additional boiler, FGD and baghouse operations data and CEM data are provided in Appendix B.

3.3 TESTING PROBLEMS OR MODIFICATIONS

The Ontario Hydro sample analyses hold time for this project was exceeded by 5 to 15 days. The hold time exceedence does not impact the representativeness of the test results. See Section 5.1.4 for additional discussion relating to sample hold times.

No other sampling or analytical problems were noted during the test program. No process problems were noted during any of the test periods.

TABLE 3-7
SUMMARY OF PROCESS DATA
UNIT 2B
AVERAGE VALUES PER TEST

	Run No.			Overall
	1	2	3	Average
Unit Operating Parameters				
Gross MW Generated	62.66	62.02	62.56	62.41
Net MW Generated	59.54	58.93	59.45	59.31
Coal Feed Rate (ton/hr)	14.35	14.30	13.70	14.12
Steam Flow (KLBS)	277.64	270.26	274.46	274.1
Steam Temperature (deg F)	949	952	951	950
APCD Operating Parameters				
Atomizer Power (KW)	59	59	61	60
FGD Inlet Temp (deg F)	326	330	334	330
FGD Outlet Temp (deg F)	186	187	185	186
Lime Slurry Flow (gpm)	7.42	4.65	5.13	5.73
Baghouse Outlet Temp (deg F)	182	183	183	183
Baghouse Delta P (in H2O)	10.95	11.69	10.06	10.90
Emissions Information				
Inlet NOx (ppm)	226	256	253	245
Inlet NOx (lb/MMBtu)	0.30	0.34	0.34	0.33
Inlet O2 (%)	2.60	2.55	2.91	2.69
Outlet O2 (%)	3.6	3.5	3.6	3.6
Inlet SO2 (ppm)	547	585	573	568
Outlet SO2 (ppm)	23.0	21.0	20.3	21.4
Outlet SO2 (lb/MMBtu)	0.05	0.04	0.04	0.04
SO2 Reduction (%)	94.93	95.77	96.04	95.58
Stack Opacity (2A/2B Combined)	9.50	9.96	8.86	9.4

4. SAMPLING AND ANALYTICAL PROCEDURES

4.1 DESCRIPTION OF SAMPLING EQUIPMENT

4.1.1 Ontario Hydro Mercury Speciation Method

The Ontario Hydro sampling train contained the following components:

- At the inlet location a calibrated borosolicate nozzle was attached to a high capacity quartz fiber thimble. The quartz thimble holder was attached to a heated borosilicate probe.
- A heated 90 mm quartz filter was positioned at the probe exit as a backup filter (in the event of particulate breakthrough from the thimble). The probe and filter temperature were maintained at the approximate flue gas temperature.
- At the inlet location the heated borosilicate probe was equipped with a calibrated thermocouple to measure flue gas temperature and a calibrated S-type pitot tube to measure flue gas velocity pressure.
- At the outlet location the heated borosilicate probe and nozzle was attached to a heated filter holder containing a 90-millimeter (mm) quartz fiber filter. The probe was equipped with a calibrated thermocouple to measure flue gas temperature and a calibrated S-type pitot tube to measure flue gas velocity pressure.
- An impinger train consisting of eight impingers. The first, second, and third impingers each contained 100 ml of 1 Normal (N) potassium chloride (KCl). The fourth impinger contained 100 ml of 5% nitric acid (HNO_3) and 10% hydrogen peroxide (H_2O_2). The fifth, sixth and seventh impingers each contained 100 ml of 4% potassium permanganate ($KMnO_4$) and 10% sulfuric acid (H_2SO_4). The eighth impinger contained 300 grams of dry preweighed silica gel. The third and seventh impingers were a Greenburg-Smith type; all other impingers were of a modified design. All impingers were maintained in a crushed ice bath.
- A vacuum line (umbilical cord) with adapter to connect the outlet of the impinger train to a control module.
- A control module containing a 3-cfm carbon vane vacuum pump (sample gas mover), a calibrated dry gas meter (sample gas volume measurement device), a calibrated orifice (sample gas flow rate monitor) and inclined manometers (orifice and gas stream pressure indicators).
- A switchable calibrated digital pyrometer to monitor flue and sample gas temperatures.

See Figures 4-1 and 4-2 for schematics of the Ontario Hydro test trains.

4.2 CO_2 AND O_2 SAMPLING EQUIPMENT

The fixed gases sampling train (Figure 4-3) used at the Unit No. 2B inlet and outlet test sites was assembled in accordance with EPA Method 3 and consisted of the following components:

- A stainless steel or Teflon probe (fastened to the Ontario Hydro sampling probe) with a plug of glass wool to remove particulate.
- An ice-cooled condenser to remove moisture from the sampled gases.
- A diaphragm pump to draw a sample of the gases.
- A valve and rate meter to control and monitor gas stream sampling rates, respectively.
- A Tedlar® bag to contain the sample of flue gases.

For Unit No. 2B, the CO_2 and O_2 concentrations of each bag were analyzed using an Orsat analyzer.

4.3 SAMPLING PROCEDURES

The following paragraphs and flow charts summarize the procedures used to sample the flue gases, recovery of the resultant samples and analyze the samples.

4.3.1 Preliminary Tests

Following equipment setup, preliminary test data was compiled at each of the emission test sites to verify pretest data/assumptions, determine nozzle sizes, and compute isokinetic sampling rates.

Test site geometric measurements were measured and sampling point distances were recalculated. A pitot traverse was performed to determine velocity profiles and to check for the presence/absence of cyclonic flow at each site. The cyclonic flow checks proved negative at both locations. As appropriate, flue gas temperatures, dry gas composition, and moisture content were also determined by EPA Reference Methods 2, 3, and 4, respectively.

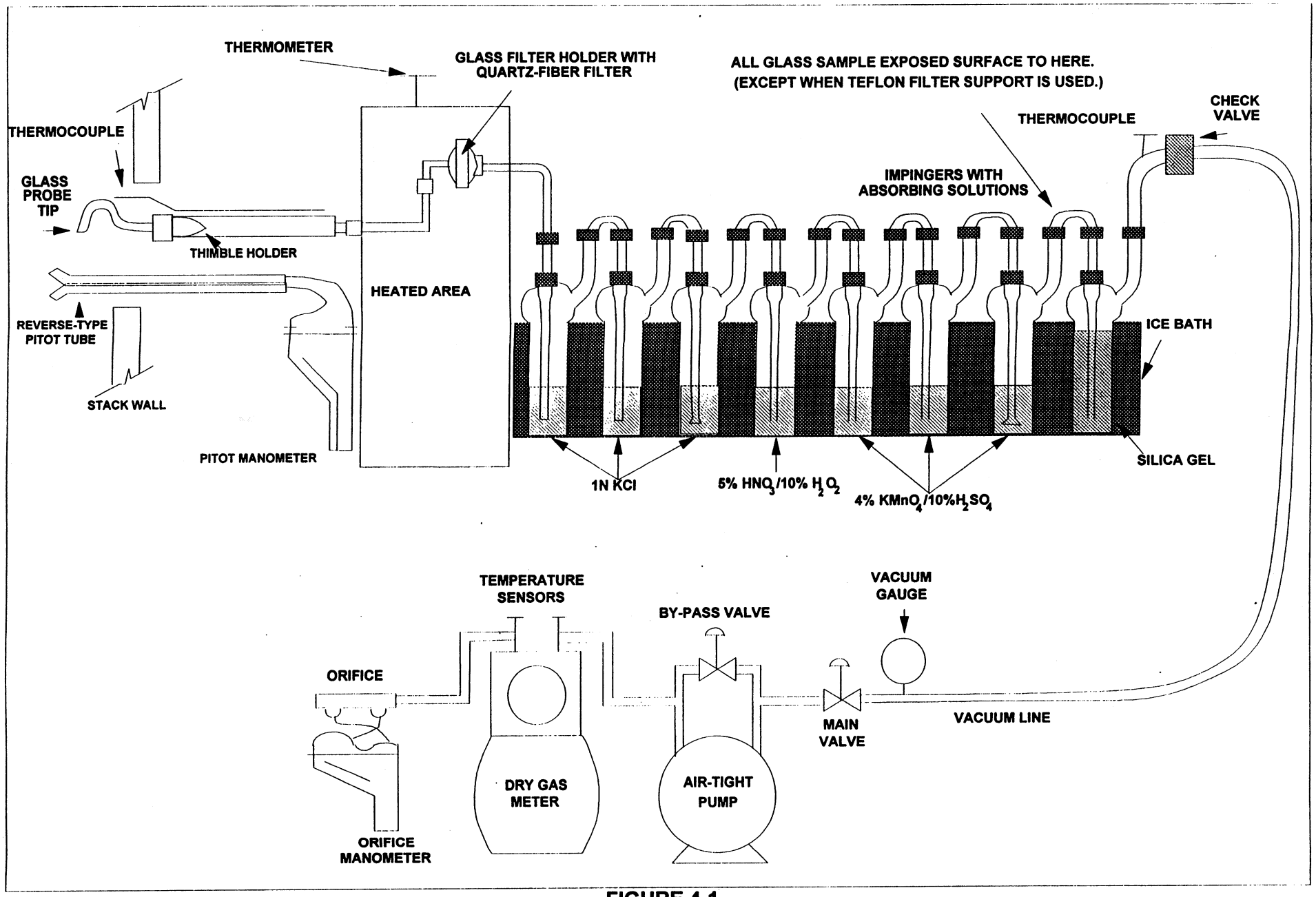

FIGURE 4-1
FGD INLET TEST LOCATION
ONTARIO HYDRO SAMPLING TRAIN

c:\freelancedrawings\baghousetrain.prz

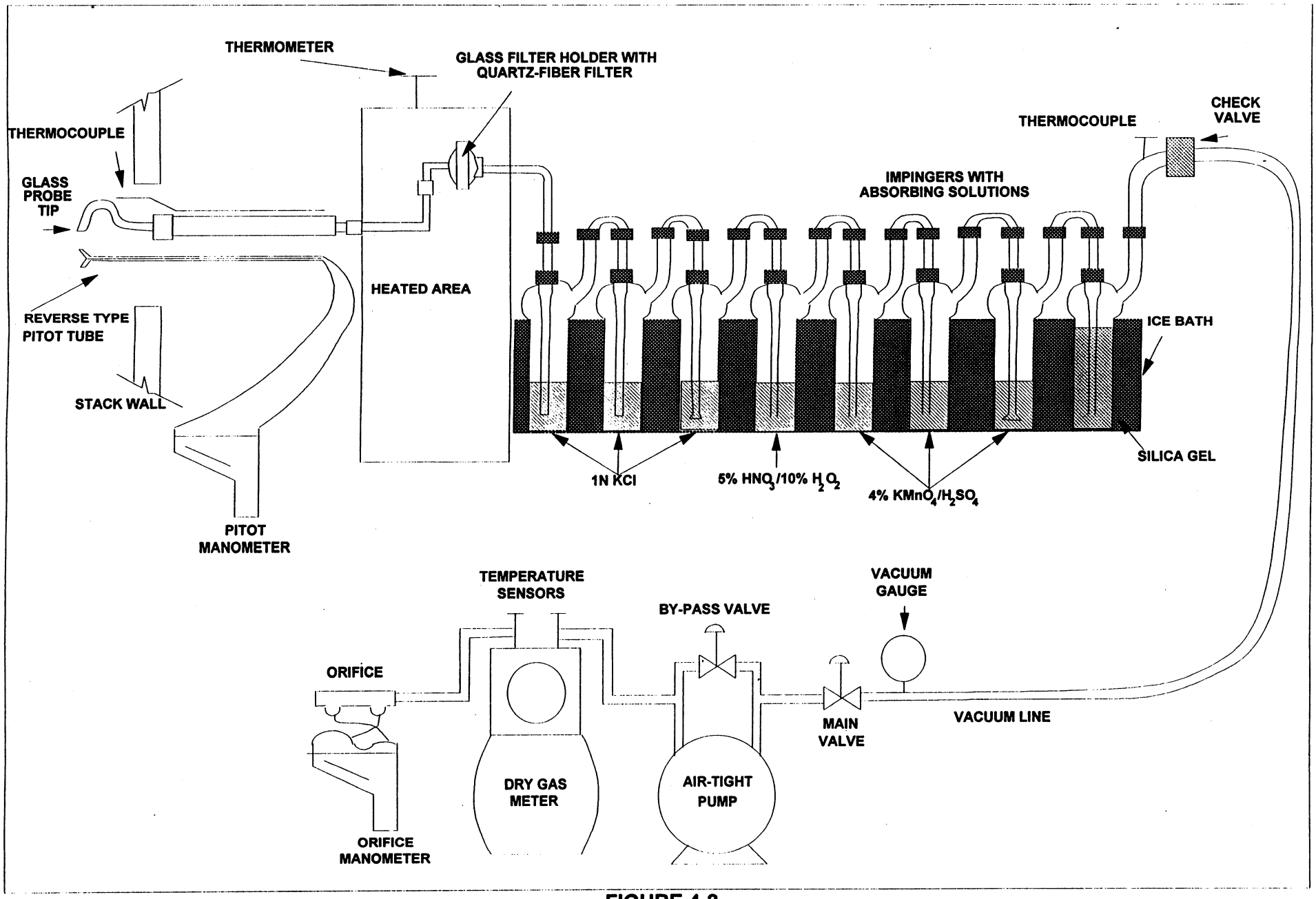

FIGURE 4-2
BAGHOUSE OUTLET TEST LOCATION
ONTARIO HYDRO SAMPLING TRAIN

c:\freelancedrawings\baghousetrain.prz

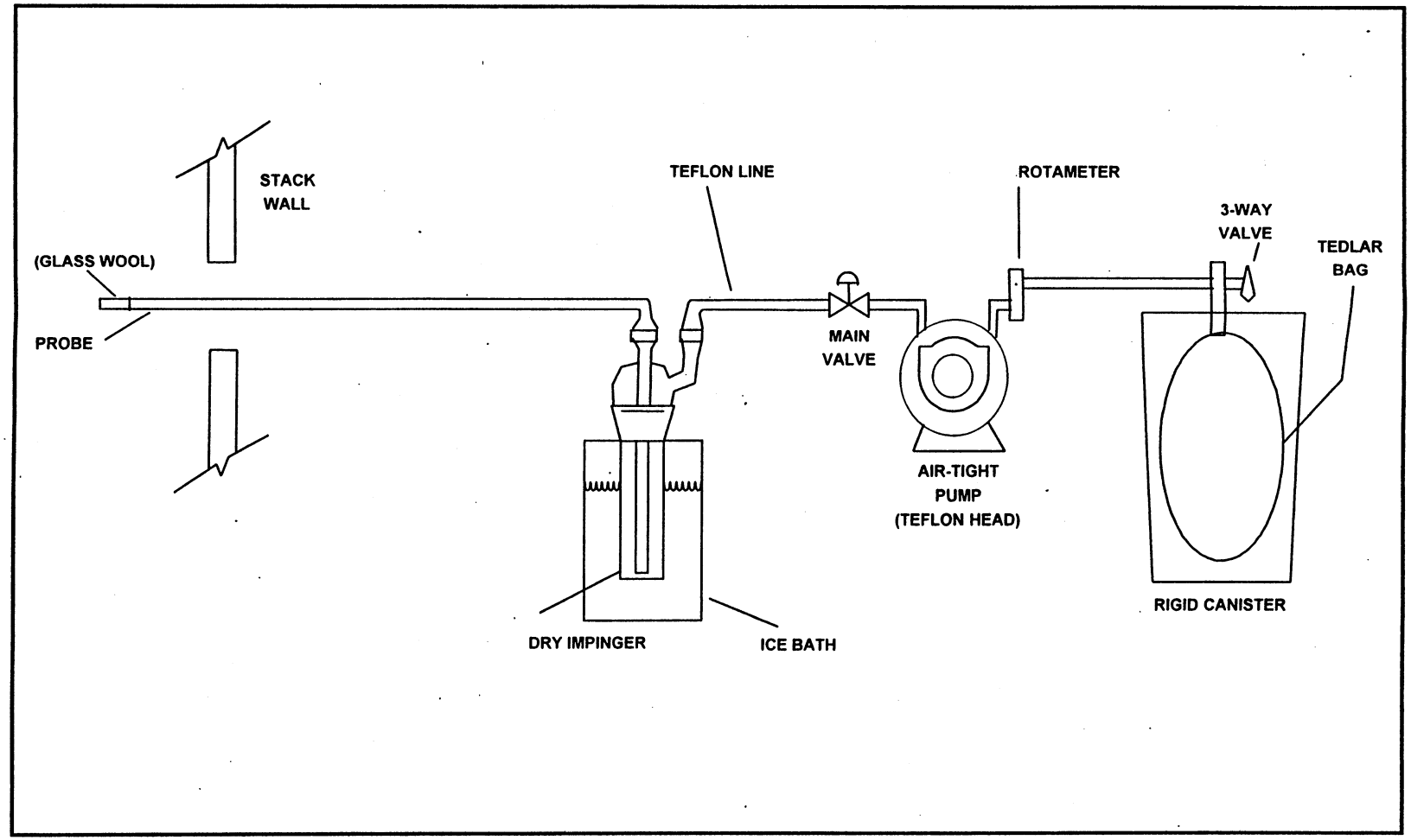

FIGURE 4-3

EPA METHOD 3 - DRY GAS STEAM COMPOSITION SAMPLING TRAIN

The preparation, sampling, and recovery procedures used to sample the emission points for speciated mercury conformed to those specified in the draft Ontario Hydro method and as described in the Site-Specific Sampling/Testing, Analytical and QA/QC plan. Each inlet and outlet test run was 125 minutes in duration with readings taken at each of the 25 traverse points once every 5 minutes. Readings were recorded at each traverse point at all test locations. Leak checks were performed at the beginning and end of each test run and before and after test port changes at both locations and thimbles changes at the inlet location. Figure 4-4 illustrates the train preparation. Figure 4-5 illustrates the sampling procedures. Figure 4-6 illustrates the sample recovery procedures.

4.4 ANALYTICAL PROCEDURES

4.4.1 Sample Analyses

4.4.1.1 Ontario hydro Sample Analyses

Figure 4-7 presents a schematic of the analytical procedures used during analysis of the Ontario Hydro samples.

4.4.1.2 Coal Sample Analyses

4.4.1.2.1 Preparation

Preparation of the coal samples followed ASTM Method D-2013. Following air drying and riffling the coal sample was pulverized until 100% of the sample passed the 60-mesh screen.

4.4.1.2.2 Chlorine

The prepared coal sample was weighed. The weighed sample was oxidized by combustion in a bomb with a bicarbonate/carbonate solution and the amount of chlorine present determined by ion-chromatography (IC) using EPA Method 300 procedures.

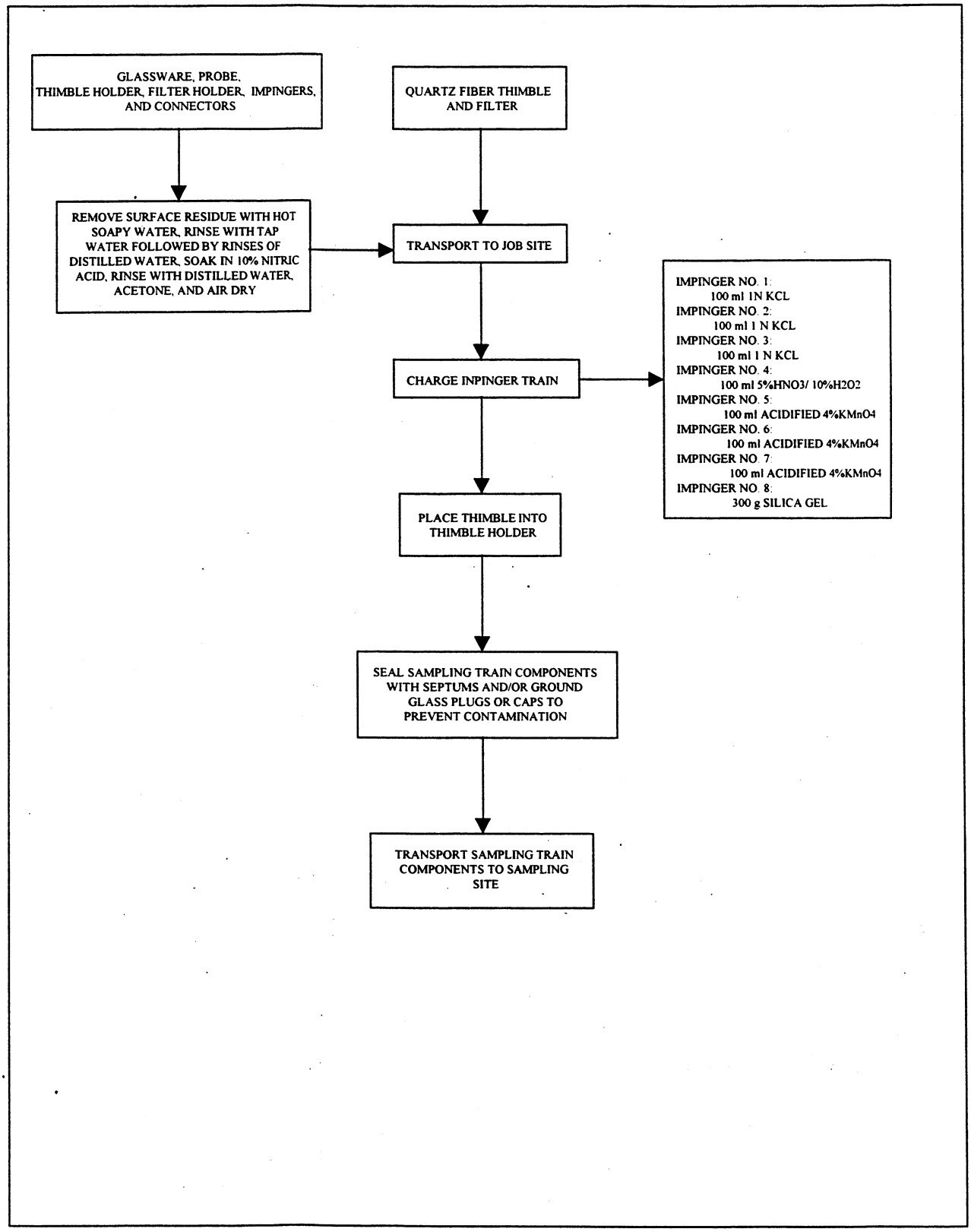

FIGURE 4-4
PREPARATION PROCEDURES FOR ONTARIO HYDRO SAMPLING TRAIN

DOE20-D20

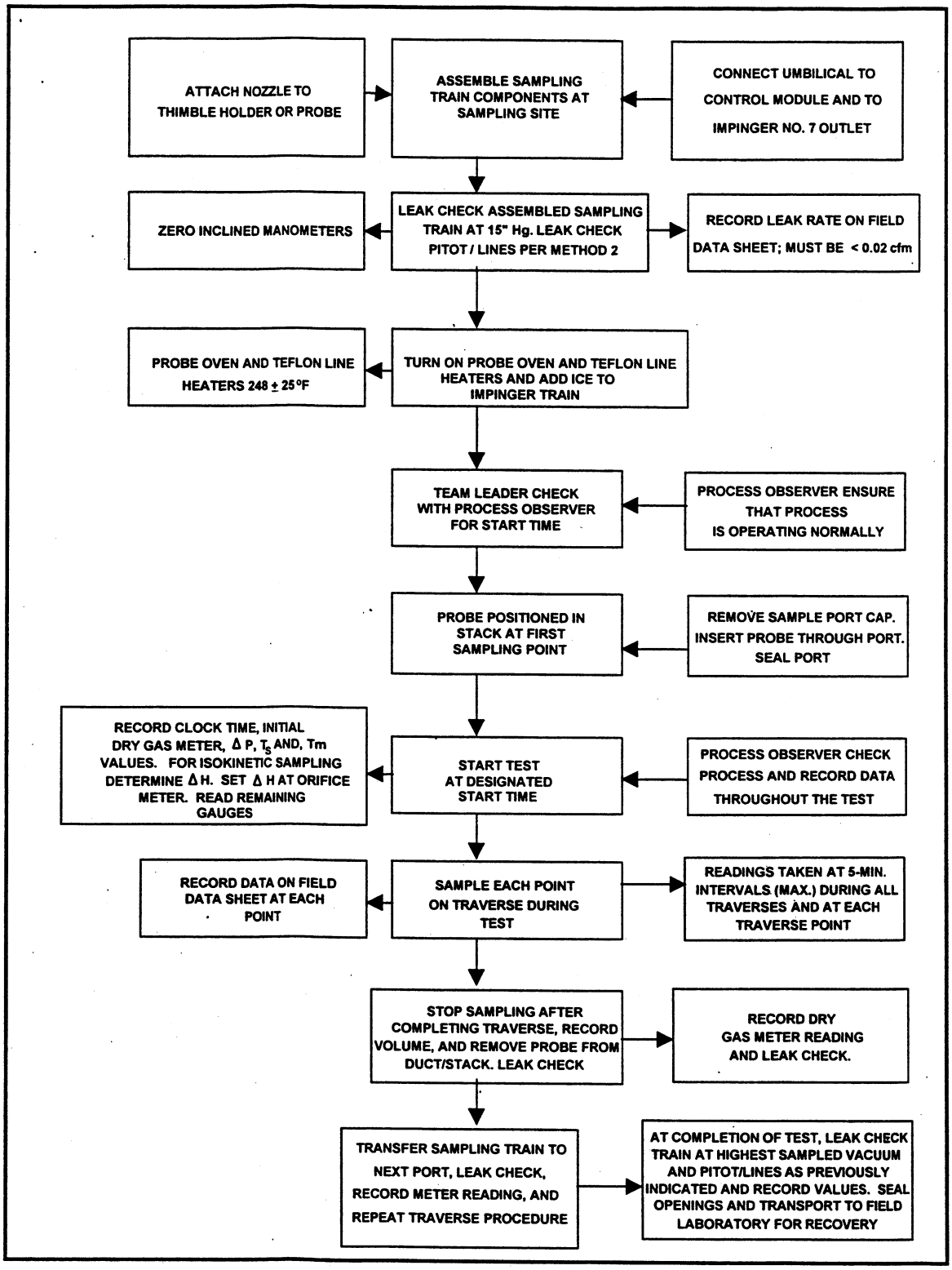

FIGURE 4 - 5
SAMPLING PROCEDURES FOR ONTARIO HYDRO TRAIN

DOE21-D20

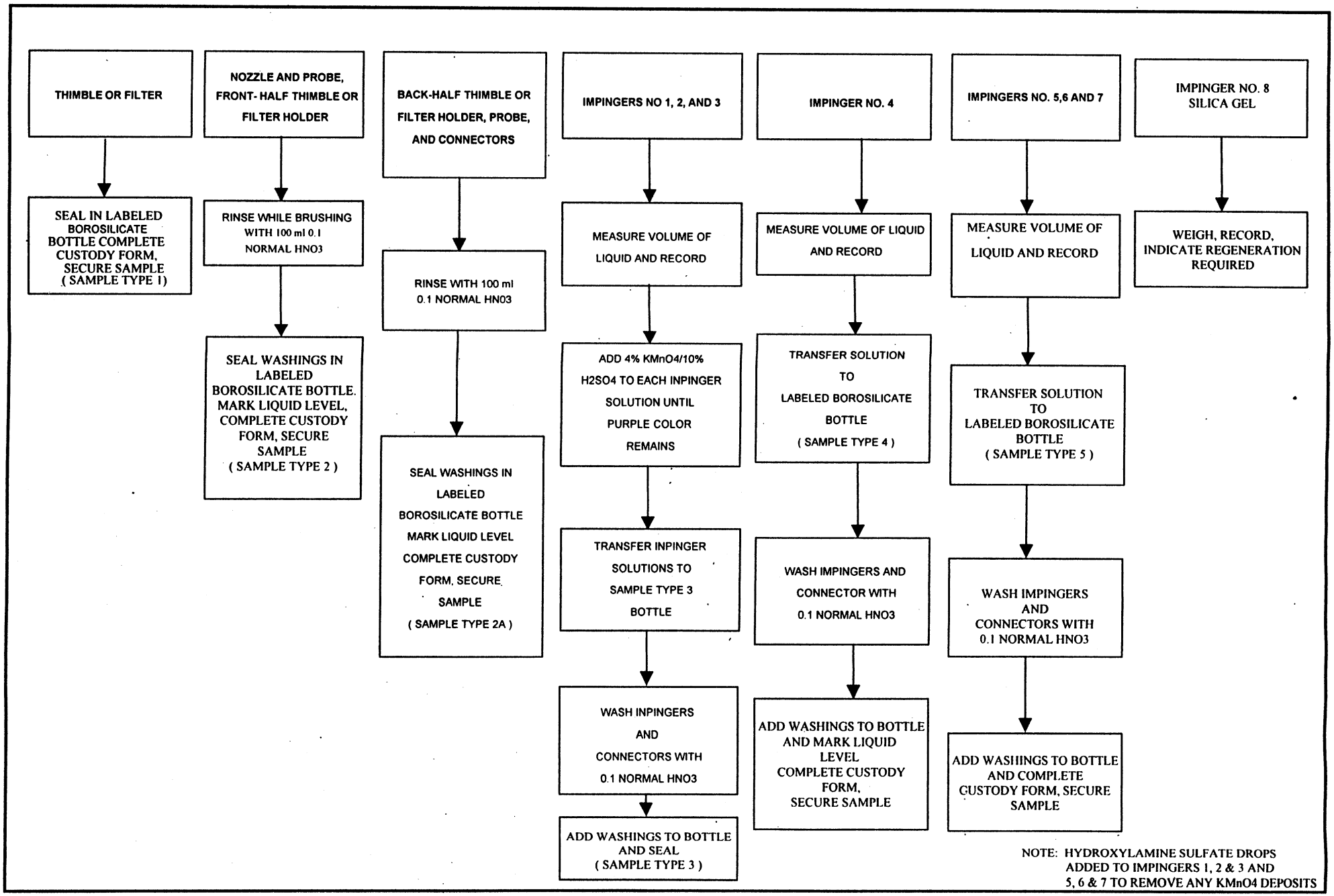

FIGURE 4 - 6
SAMPLE RECOVERY PROCEDURES FOR ONTARIO HYDRO METHOD

DOE22-D20

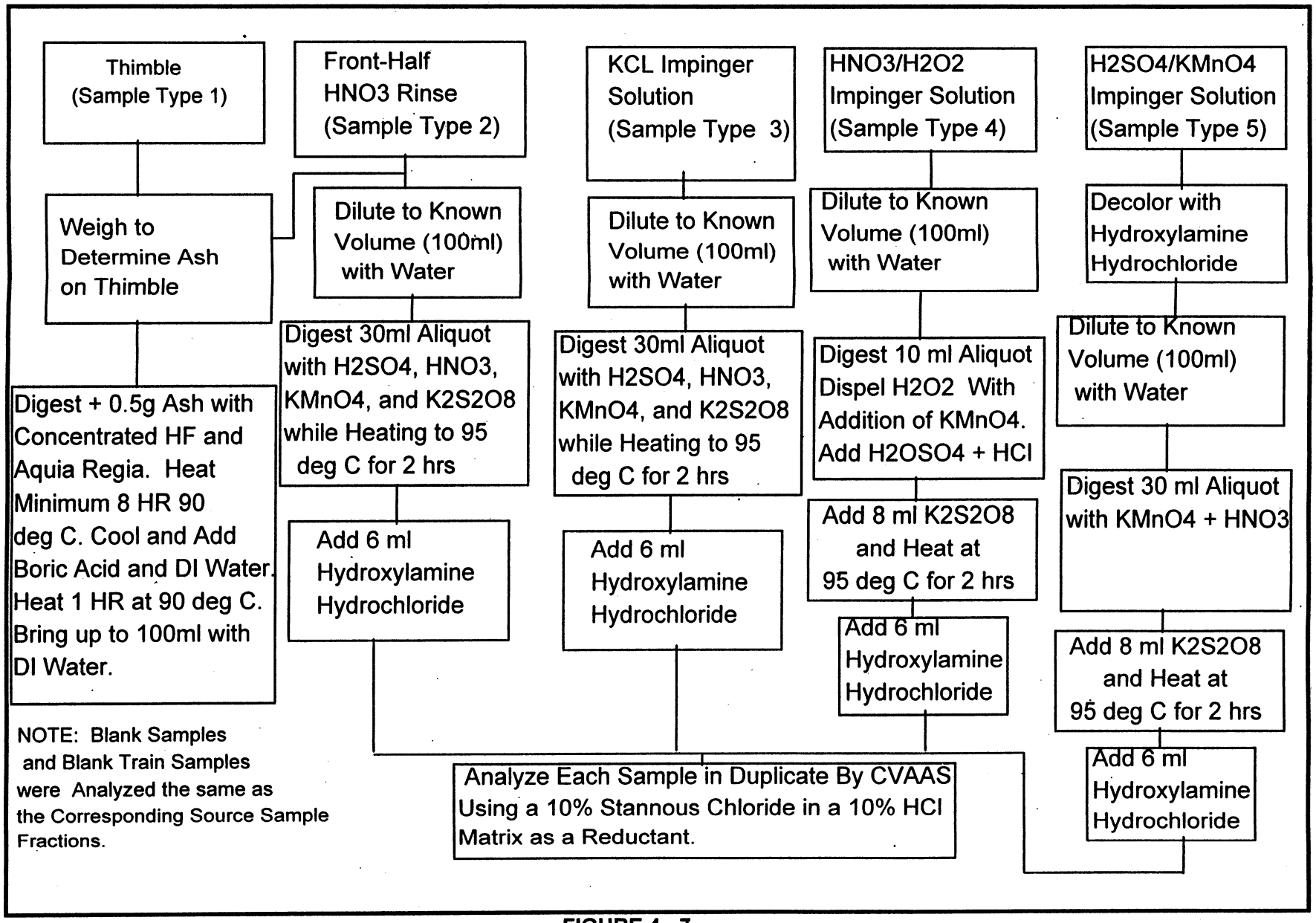

FIGURE 4 - 7

ANALYTICAL PROCEDURE FOR ONTARIO HYDRO SAMPLING TRAIN

c:\freelance drawing\Fig5-7.prz

4.4.1.2.3 Mercury

Following preparation the coal sample was weighed. The sample digested in sulfuric acid, nitric acid and potassium permanganate.

Following digestion the liquid sample was analyzed for total mercury content using cold vapor atomic absorption (CVAA) by EPA Method 7471 procedures.

4.4.1.2.4 Ash, Sulfur and Heating Value

The prepped coal samples were analyzed for ash and sulfur content plus heating value using ASTM Methods D3174, D4239 and D3286, respectively.

5. QUALITY ASSURANCE SUMMARY

This section discusses results for QC samples collected during the test program. Discussions are provided for stack gas samples (Subsection 5.1) and coal samples (Subsection 5.2).

5.1 STACK SAMPLE QA/QC RESULTS

This section provides detailed information regarding the QA/QC activities associated with stack sample collection, analysis, and reporting.

This summary pertains to all test data collected from sampling activities performed on Unit No. 2B during the period of 16 through 18 November 1999. Analyses were performed on these samples for speciated mercury.

Project data quality objectives, as measured by precision, accuracy and completeness, were evaluated. Additionally, holding times, spike recoveries, laboratory blanks, and calibrations were evaluated to determine overall data quality based on criteria specified in the Site-Specific Sampling/Testing, Analytical and QA/QC Plan and the Quality Assurance Project Plan.

5.1.1 Stack Sample Collection and Calculations

Field QA/QC activities associated with the collection of stack Ontario Hydro method emission samples included pre- and post-test calibrations of sampling equipment, adherence to the proper sampling method procedures, documentation of field data, recovery of samples without contamination, and collection of appropriate field train and site blank samples.

Copies of the field data sheets are contained in Appendix C. Chain of custody forms are included in each laboratory report and provide a list of all samples collected and submitted for analysis during the test program. The laboratory reports are provided in Appendix D.

Proper field sampling procedures include sampling at 100% isokinetic ±10% and maintaining sample train leakage rates at ≤ 0.02 CFM. Table 5-1 contains a summary of all isokinetic

Table 5-1
Stack Emission Sampling Field QA/QC Results

Test Location	Test Run	Isokinetic Sampling Rate[1]	Initial Leak Check Rate[2]	Final Leak Check Rate[2]	Gas Meter Calibration Values[3]	
					Pre	Post[(4)]
Unit No. 2B FGD Inlet	1	96.3	0.014	0.012	0.9961	0.9800
	2	100.0	0.014	0.012	0.9961	0.9800
	3	101.2	0.012	0.012	0.9961	0.9800
Unit No. 2B Baghouse Outlet	1	107.9	0.010	0.008	1.0098	0.9970
	2	102.1	0.005	0.012	1.0098	0.9970
	3	101.4	0.008	0.012	1.0098	0.9970

1 Isokinetic rate must be 100 ± 10%. All sampling rates met isokinetic criteria.

2 Initial and final leak check value must be ≤ 0.02 CFM. All leak checks were acceptable.

3 Post-test calibration must be ± 0.05 of pre-test value. All calibration values were acceptable.

4 Based on EPA alternative post test calibration procedure.

Note: Silica gel impinger exit temperature maintained < 68°F during all test periods.

sampling rates for all tests, initial and final leak check rates, and pre- and post-test dry gas meter calibration results. This table indicates that all test runs were within the acceptable ranges for all field measurements. Appendix F contains the stack test equipment calibration data.

5.1.2 Sample Chain of Custody

Sample custody procedures were followed per Section B-2 of the QAPP. Following collection and recovery, all samples were transferred under chain of custody to representatives of Philip Analytical Services Laboratory located in Reading, Pennsylvania. The sample storage area was locked and secured during off-hours when test representatives were not on-site.

All samples arrived in good condition to the Philip laboratory.

5.1.3 Stack Emission Blank Sample Results

Blank samples were submitted with the stack emissions samples as designated in the test method and QAPP. During each set of the three test runs, a blank sample train was setup, leak checked and recovered at each of the test locations on Unit No. 2B. Site blanks of the thimbles, filters, impinger train solutions and recovery solutions were retained and analyzed. No mercury above the analytical detection limit was present in the blank train fractions at the FGD inlet test location. A small amount of mercury (0.075 micrograms) was detected in the 0.1 normal nitric acid site blank sample and 0.045 micrograms of mercury was found in the outlet blank train probe rinse (0.1 normal nitric acid). As previously mentioned no mercury was found in the inlet blank train sample. The same nitric acid was used to recover all source and blank train samples at both locations.

The probe rinse results for outlet tests 2 and 3 were less than the measured blank values, and the outlet blank train was recovered with the test run two sample. Since levels detected in the site blank and outlet blank train do not appear to correlate with the source sample results obtained at the outlet it was decided not to apply any blank correction to the outlet source values.

5.1.4 Ontario Hydro Analysis Holding Times

Holding time is the period from sample collection to sample analysis. The draft Ontario Hydro method has a default hold time of 45 days for analysis after sampling. The authors of the method at the Energy & Environmental Research Center (EERC) has indicated that this hold time is a very conservative value and that they have data demonstrating that the levels do not change over several months in the recovered impinger solutions as submitted to the laboratory. Philip Laboratories has confirmed this by the tabulated data below which shows no measurable change in KCl and KMnO4 impinger mercury levels over greater than four months. The filter and thimble captured solids of coal fly ash is within the heated zone of the train and therefore volatile mercury has already been stripped, therefore, hold time should not be a concern with the fraction. In fact, NIST uses coal fly ash as mercury reference materials (e.g. 1633b) because of its long term stability. In addition, EERC has indicated that sample representativeness over time is also influenced by the type of sample containers used, with borosilicate being the best alternative. For this program, all mercury speciation samples were stored in sealed amber borosilicate sample bottles from the time of sample collection to analysis.

Despite the minor exceedence from the method recommended hold, there should be no concern for sample integrity from sample storage of this time frame.

Ontario Hydro Method Mercury Speciation Train Sample Stability Study				
KCl Impinger				
	LAB. ID#	0447898 99	044799 99	044800 99
Analysis Date		ug	ug	ug
Sept. 9th 1999		16.4	7.70	4.13
Nov. 1999		14.6	7.25	4.11
Jan. 11th 2000		16.3	7.53	4.50
KMnO4 Impinger				
	LAB. ID#	0447898 99	044799 99	044800 99
Analysis Date		ug	ug	ug
Sept. 9th 1999		3.66	0.383	0.570
Nov. 1999		3.33	0.361	0.505
Jan. 11th 2000		3.62	0.391	0.538

5.1.5 Internal Field Audit Procedures

During the performance of the test program, the WESTON field team leader performed an audit of the field measurement activities. A field audit checklist (Technical System Audit) was used to document the internal audit. The audit included examination of field sampling records, field instrument operating records, sample collection, recovery, handling and chain-of-custody procedures. A copy of the Technical System Audit is provided in Appendix G.

5.1.6 External Performance Evaluation Audits

No performance evaluation audits were provided to WESTON by the regulatory agencies during the test program.

5.1.7 Stack Emissions QA/QC Conclusions

All mercury speciation stack emissions data and results are believed to be representative of the emissions encountered during the test periods and appear to be acceptable following QA/QC review.

5.1.8 Ontario Hydro Sample Analysis

Each Ontario Hydro sample was analyzed in duplicate and every 1 in 10 samples were analyzed in triplicate. The percent relative difference (RPD) for duplicate analysis is $\leq$ 20%. With the exception of a few samples which contained low levels of mercury near the detection limit, the RPD criteria was satisfied.

The accuracy criteria for spike samples and laboratory control samples is 80 to 120%. This criteria was satisfied in all cases.

5.1.9 Ontario Hydro Sample Analysis QA/QC Conclusions

All source sample data and results appear to be acceptable following QA/QC review.

5.2 PROCESS SOLID SAMPLE QA/QC RESULTS

The Site-Specific Sampling/Analytical and QA/QC Plan and the QAPP for this program identified the analytical QC objectives for the process solid sample analysis.

All QA/QC analysis results are provided in Appendix D of this report. A brief summary of the results follows.

Analytical Precision

Analytical precision was determined by RPD obtained by the duplicate sample analyses. The +RPD objective for the mercury and chlorine in coal was ≤ 20%. The RPD for ash, sulfur and heating value is ≤ 10%. The RPD objectives for duplicate analyses were met in all cases for all analytes.

Analytical Accuracy

The objectives for accuracy for spike samples and laboratory control samples were 70 to 130% for the mercury in coal and 80-120% for chlorine. The objectives for accuracy were satisfied in all cases.

5.2.1 Holding Times

All coal samples were analyzed within the required holding times as specified in the Site-Specific Sampling/Testing, Analytical and QA/QC Plan.

5.2.2 Process Sample QA/QC Conclusions

All solid sample process data and results appear to be acceptable following QA/QC review.

5.3 COMPLETENESS

Laboratory completeness is a measure of the amount of valid measurements obtained from all the laboratory measurements associated with this test program. The number of valid measurements

satisfied the laboratory completeness goal identified in the Site-Specific Sampling/Testing, Analytical and QA/QC Plan QAPP of greater than 90 percent.

Based on a review of all QA/QC results, no data has been lost or qualified as not satisfied the QC criteria for precision and accuracy. Therefore, a 100% completeness can be assigned for both sampling and analysis.