APPENDIX

Appendix A: Process Operating Data
Appendix B: Calculations
Appendix C: Raw Field Data and Calibration Data Sheets
Appendix D: Reduced Field Data Sheets
Appendix E: Sampling Log and Chain of Custody Records
Appendix F: Analytical Data Sheets
Appendix G: List of Participants

© Mostardi-Platt Associates, Inc.

Columbia Unit 1

Turbine / Extractions Hourly Performance Report for 19-Oct-99

Hour: 8
Start Time: 10/19/1999 0:00
Increment: 1:00

Time	Main Steam Flow to Turbine Klbhr 1CI.MT.HT0.A.V	Throttle Temp F 1A1107.S	Throttle Press PSIG 1A1106.S	First Stage Pressure PSIG 1A1123.S	Hp Turbine Efficiency % 1CT.GT.HE0.A.V	Hp Exhaust Temp F 1CI.TT.HX0.A.V	Hp Exhaust Pressure PSIG 1CI.PT.HX0.A.V	IP Inlet Temp F 1CI.TT.IT0.A.V	IP Inlet Pressure PSIG 1CI.PT.IT0.A.V	Reheater Delta P
8:00	3,738.89	994.00	2,289.97	1,715.65	80.30	652.39	569.07	1,000.08	523.63	45.44
9:00	3,718.98	993.39	2,287.36	1,706.46	79.96	653.07	569.85	999.75	524.72	45.13
10:00	3,716.71	994.47	2,290.46	1,704.12	80.01	652.89	569.07	997.22	523.66	45.41
11:00	3,749.59	991.71	2,289.45	1,716.35	80.35	651.38	572.16	998.92	526.79	45.37
12:00	3,759.68	992.54	2,290.01	1,716.52	80.35	650.97	572.74	997.47	527.13	45.61
13:00	3,761.29	990.26	2,291.02	1,716.26	80.42	649.08	571.00	999.18	525.22	45.78
14:00	3,755.08	995.27	2,287.98	1,714.06	80.44	654.22	571.95	999.02	526.41	45.53
15:00	3,773.50	992.23	2,291.94	1,716.50	80.46	651.15	571.36	998.03	526.47	44.89
16:00	3,760.26	991.73	2,289.33	1,715.04	80.38	652.20	576.27	1,001.05	530.81	45.46
17:00	3,748.54	991.74	2,290.34	1,715.59	80.38	653.15	575.13	999.56	529.77	45.36
18:00	3,750.73	994.07	2,289.72	1,715.60	80.46	653.93	574.90	999.53	529.46	45.44
19:00	3,757.48	991.70	2,292.15	1,717.14	80.37	651.76	574.06	997.14	528.33	45.73
20:00	3,758.58	991.22	2,291.44	1,716.50	80.41	651.07	572.09	999.07	526.50	45.60
Hourly Max	**3832.3**	**1001.6**	**2302.4**	**1724.9**	**81.0**	**659.5**	**579.5**	**1007.4**	**534.6**	
Hourly Min	**3666.4**	**984.5**	**2275.8**	**1688.2**	**79.3**	**644.8**	**563.9**	**990.6**	**519.0**	
Hourly Avg	**3751.2**	**992.5**	**2290.1**	**1714.0**	**80.3**	**652.0**	**572.6**	**998.8**	**526.9**	**45.4**

Time	Turbine Cycle Heat Rate Gross Actual 1CC.RZ.TG0.A.V	Turbine Cycle Heat Rate Net Actual 1CC.RZ.TN0.A.	NET UNIT HEAT RATE (GPHI) 1CC.RZ.PN0.A.V
8:00	8,368.05	8,749.68	10,216.66
9:00	8,400.02	8,801.66	10,292.79
10:00	8,386.30	8,798.72	10,300.66
11:00	8,391.10	8,799.59	10,313.71
12:00	8,407.79	8,809.92	10,343.57
13:00	8,397.48	8,787.20	10,323.30
14:00	8,412.52	8,796.35	10,323.29
15:00	8,427.77	8,829.38	10,359.07
16:00	8,427.35	8,827.14	10,353.50
17:00	8,402.09	8,807.05	10,335.42
18:00	8,406.63	8,798.96	10,332.84
19:00	8,401.63	8,779.35	10,322.24
20:00	8,400.21	8,777.81	10,322.84
Hourly Max	**8577.391**	**8991.016**	**10551.243**
Hourly Min	**8237.445**	**8613.564**	**10124.628**
Hourly Avg	**8403.889**	**8799.246**	**10326.328**

Columbia Unit 1

Boiler Hourly Performance Report for 19-Oct-99

Hour: 8
Start Time: 10/19/1999 0:00
Increment: 1:00

Time	Coal Flow RATE (Klbhr) 1A1926.S	Coal Flow BURN Tons sum of integrators	Boiler Efficiency % 1CB.GB.EE0.A.V	AIR FLOW CALCULATED KLBH 1CC.ML.A00.A.V	GAS FLOW FROM TCHI KLBH 1CC.ML.T00.A.V	Econ Exit O2 % 1a1310.s	TOTAL SH SPRAY FLOW KLBH 1CI.MS.S00.A.V	TOTAL RH SPRAY FLOW KLBH 1CI.MS.R00.A.V	ECON GAS OUT NORTH F 1A1297.S	ECON GAS OUT SOUTH F 1A1298.S	ECON GAS OUT AVG F
8:00	652.35	314.15	85.63	4,746.83	5,348.64	2.92	7.29	87.97	753.00	778.71	765.86
9:00	653.85	315.85	85.54	4,756.41	5,360.25	2.90	3.55	119.24	757.64	785.64	771.64
10:00	650.68	316.40	85.43	4,764.84	5,368.03	2.92	7.60	115.15	761.47	786.44	773.96
11:00	653.90	314.90	85.32	4,788.46	5,395.97	2.90	10.97	107.15	768.63	791.73	780.18
12:00	654.88	316.60	85.16	4,818.97	5,429.19	2.92	22.51	106.37	773.06	799.37	786.22
13:00	650.89	317.00	85.10	4,807.33	5,416.27	2.92	5.64	90.36	766.03	788.18	777.11
14:00	653.75	315.00	85.22	4,815.35	5,425.96	2.89	22.43	107.38	756.12	785.80	770.96
15:00	652.82	316.30	85.23	4,820.11	5,431.05	2.91	32.23	96.18	757.44	786.94	772.19
16:00	655.52	315.90	85.26	4,840.19	5,453.19	2.91	20.23	129.55	760.41	791.09	775.75
17:00	655.25	317.30	85.20	4,826.60	5,437.69	2.93	22.28	124.74	766.27	791.66	778.97
18:00	655.86	317.22	85.16	4,827.70	5,439.21	2.92	20.44	124.13	773.08	797.90	785.49
19:00	653.65	317.17	85.03	4,824.86	5,436.17	2.92	26.73	114.81	777.11	803.88	790.50
20:00	650.32	316.40	85.03	4,816.79	5,427.12	2.91	19.29	100.76	768.13	793.56	780.85
Hourly Max	**666.299**		**85.584**	**4927.715**	**5553.406**	**3.054**	**45.725**	**134.770**	**780.757**	**809.421**	**765.855**
Hourly Min	**638.745**		**84.955**	**4696.454**	**5291.975**	**2.773**	**2.500**	**77.115**	**753.181**	**780.667**	**790.497**
Hourly Avg	**653.444**		**85.223**	**4809.245**	**5418.600**	**2.912**	**18.689**	**109.902**	**765.269**	**792.033**	**777.665**

Time	ECON FW INLET PRESSURE PSIG 1CI.PB.F00.A.V	DRUM PRESSURE PSIG 1CI.PB.D00.A.V	MAIN STEAM PRESSURE PSIG 1A1221.S	SH DP PSIG	FW INLET TEMP F 1CI.TB.F00.A.V	FURNACE DRAFT INWC 1A1294.S	PRI SH OUT DRAFT INWC 1A1300.S	REHEATER OUT DRAFT INWC 1A1299.S	ECON INLET DRAFT INWC 1A1295.S	ECON OUTLET DRAFT INWC 1A1296.S	ECON GAS DP INWC
8:00	2,726.81	2,623.92	2,353.51	270.41	480.79	-0.78	-0.85	-1.47	-2.22	-7.01	4.79
9:00	2,719.62	2,617.89	2,349.39	268.50	481.05	-0.72	-0.78	-1.41	-2.17	-7.01	4.84
10:00	2,721.11	2,619.84	2,353.22	266.62	480.88	-0.74	-0.77	-1.51	-2.13	-7.03	4.90
11:00	2,726.72	2,623.05	2,353.31	269.74	481.36	-0.70	-0.76	-1.62	-2.25	-7.12	4.87
12:00	2,726.45	2,623.25	2,353.82	269.43	481.56	-0.77	-0.82	-1.53	-2.13	-7.24	5.10
13:00	2,730.21	2,625.30	2,354.88	270.42	481.06	-0.73	-0.81	-1.54	-2.12	-7.18	5.05
14:00	2,724.88	2,621.01	2,351.94	269.07	481.42	-0.87	-0.93	-1.47	-2.09	-7.17	5.08
15:00	2,730.74	2,626.88	2,355.36	271.52	481.38	-0.81	-0.85	-1.56	-2.08	-7.22	5.14
16:00	2,726.06	2,621.70	2,353.24	268.47	482.17	-0.65	-0.90	-1.61	-2.16	-7.26	5.10
17:00	2,727.21	2,623.05	2,354.04	269.01	481.85	-0.89	-0.89	-1.58	-2.17	-7.25	5.08
18:00	2,726.37	2,623.45	2,353.54	269.91	481.91	-0.88	-0.78	-1.66	-2.13	-7.29	5.16
19:00	2,729.02	2,626.15	2,355.64	270.50	481.76	-0.80	-0.81	-1.63	-2.13	-7.28	5.15
20:00	2,730.11	2,625.49	2,355.57	269.92	481.31	-0.77	-0.84	-1.58	-2.20	-7.23	5.03
Hourly Max	**2743.896**	**2638.916**	**2366.455**	**266.623**	**482.745**	**-0.016**	**-0.453**	**-0.951**	**-1.537**	**-6.935**	**4.786**
Hourly Min	**2706.055**	**2605.957**	**2337.158**	**271.521**	**480.152**	**-1.481**	**-1.222**	**-2.042**	**-2.840**	**-7.345**	**5.159**
Hourly Avg	**2726.578**	**2622.902**	**2353.619**	**269.503**	**481.465**	**-0.788**	**-0.827**	**-1.560**	**-2.143**	**-7.187**	**5.022**

Columbia Unit 1

Generator-Condenser Hourly Performance Report for 19-Oct-99

Hour: 8
Start Time: 10/19/1999 0:00
Increment: 1:00

Time	Power Output Gross (MW) 1A1696.S	Aux Load TOTAL (MW) 1CI.JG.A00.A.V	Power Output NET (MW) 1CI.JG.N00.A.V	AUX LOAD 1A 4160 (MW) 1A1702.S	AUX LOAD 1B 4160 (MW) 1A1703.S	Reactive Power (MVAR) 1A1697.S	Hydrogen Pressure (Psig) 1A1732.S				
8:00	541.59	23.41	518.05	11.81	10.45	141.92	59.30				
9:00	540.93	24.67	515.77	12.17	10.61	136.00	59.16				
10:00	539.90	25.33	514.86	12.32	10.79	133.14	58.98				
11:00	542.91	25.19	517.86	12.48	10.77	136.59	58.84				
12:00	543.45	24.76	518.66	12.30	10.94	136.01	58.70				
13:00	542.38	24.07	518.48	12.22	10.65	135.79	58.54				
14:00	542.91	23.62	519.62	11.88	10.76	142.34	58.40				
15:00	542.95	24.70	518.19	11.85	10.79	139.42	58.25				
16:00	545.05	24.69	520.53	12.17	10.80	134.57	58.08				
17:00	544.06	25.03	519.79	12.26	10.78	134.11	57.92				
18:00	544.49	24.37	520.11	11.82	10.76	138.90	57.76				
19:00	544.28	23.43	520.63	11.78	10.70	149.51	57.62				
20:00	543.28	23.31	519.94	11.77	10.56	137.58	57.43				
Hourly Max	**547.852**	**26.510**	**524.502**	**13.354**	**11.316**	**154.980**	**59.290**				
Hourly Min	**536.328**	**22.879**	**510.852**	**11.444**	**10.248**	**104.668**	**57.336**				
Hourly Avg	**543.030**	**24.439**	**518.713**	**12.085**	**10.738**	**138.468**	**58.312**				

Time	CONDENSER Hotwell T F 1A1000.s	CONDENSER "A" Backpres. InHg 1A1001.s	CONDENSER "B" Backpres. InHg 1A1002.s	CONDENSER "A" CW Dp Ft of H2O 1A1009.s	CONDENSER "B" CW Dp Ft of H2O 1A1010.s	CONDENSER CW Inlet T F 1CI.TW.C00.A.V	CONDENSER CW Outlet T F 1CI.TW.H00.A.V	CONDENSER Cw Rise T Avg F 1CC.TW.R00.A.V	CONDENSER TTD T 1CC.TO.TTD.A.V	CONDENSER Cleanliness % 1CO.GO.C00.A.V	Condenser Air Ingress ft^3/min 1a1937.s
8:00	115.14	2.31	2.80	14.96	15.07	80.74	110.07	29.34	-0.61	0.00	17.40
9:00	115.10	2.44	2.81	14.97	15.05	80.63	110.08	29.45	0.34	96.67	17.46
10:00	115.47	2.61	2.81	15.04	15.16	80.70	110.05	29.35	1.25	94.39	17.35
11:00	115.56	2.73	2.85	14.95	15.08	80.98	110.53	29.55	1.93	80.08	16.90
12:00	115.82	2.86	2.88	14.97	15.00	81.12	110.74	29.61	2.75	71.75	16.86
13:00	116.26	2.96	2.91	14.93	15.06	81.52	111.06	29.53	3.20	67.28	17.23
14:00	116.16	2.98	2.92	15.00	15.11	81.67	111.19	29.52	3.32	65.93	16.88
15:00	116.38	2.96	2.91	15.02	15.16	81.65	111.13	29.47	3.17	67.75	16.74
16:00	116.58	2.98	2.94	14.97	15.07	81.61	111.29	29.68	3.25	67.00	16.66
17:00	116.35	2.99	2.94	14.97	15.02	81.71	111.44	29.73	3.18	66.80	16.65
18:00	116.63	3.00	2.96	14.90	15.09	81.87	111.53	29.66	3.31	66.38	16.76
19:00	116.55	2.99	2.95	14.95	15.12	81.75	111.41	29.66	3.30	66.28	16.79
20:00	116.63	2.99	2.94	15.01	15.09	81.81	111.41	29.60	3.26	66.74	16.95
Hourly Max	**117.174**	**3.019**	**2.969**	**15.205**	**15.635**	**81.985**	**111.606**	**29.808**	**3.560**	**121.672**	**18.033**
Hourly Min	**114.777**	**2.375**	**2.783**	**14.756**	**14.720**	**80.546**	**109.836**	**29.175**	**-0.254**	**0.000**	**16.080**
Hourly Avg	**116.108**	**2.870**	**2.901**	**14.975**	**15.083**	**81.420**	**110.988**	**29.568**	**2.739**	**74.443**	**16.936**

Columbia Unit 1 | 19-Oct-99 | Hour: 8

Air Heaters / Feeder Rate Hourly Performance Report | Start Time: 10/19/1999 0:00 | Increment: 1:00

Time	1A AH AIR INLET T F 1CI.TA.Q10.A.V	1B AH AIR INLET T F 1CI.TA.R10.A.V	1A AH AIR OUTLET T F 1CI.TA.Q20.A.V	1B AH AIR OUTLET T F 1CI.TA.R20.A.V	1A AH GAS INLET T F 1CI.TA.Q30.A.V	1B AH GAS INLET T F 1CI.TA.R30.A.V	1A AH AVG COLD END T F 1CA.TA.QC0.A.V	1B AH AVG COLD END T F 1CA.TA.RC0.A.V	1A AH GAS OUTLET T F 1A1288.S	1A AH GAS OUTLET T F 1A1289.S		
8:00	94.18	90.97	628.31	635.09	722.59	710.89	196.58	204.63	298.97	297.70		
9:00	91.42	88.84	635.96	641.30	732.38	719.08	196.46	204.46	301.50	299.06		
10:00	90.95	87.48	640.69	646.55	736.83	723.80	197.34	204.89	303.73	300.91		
11:00	89.79	85.28	644.40	652.08	740.61	730.50	197.86	204.87	305.92	302.99		
12:00	86.49	83.88	651.85	657.16	747.49	735.68	197.52	205.84	308.55	305.38		
13:00	81.77	82.92	650.09	655.61	742.14	732.93	194.25	205.70	306.74	306.08		
14:00	84.93	82.76	644.46	648.97	737.90	726.50	194.94	203.99	304.94	303.06		
15:00	86.98	82.99	644.91	648.97	738.17	725.85	196.69	203.99	306.40	302.40		
16:00	88.93	83.87	646.19	651.01	740.62	726.97	198.28	204.11	307.63	302.22		
17:00	88.27	82.91	648.09	653.47	743.23	730.09	198.00	204.34	307.72	303.63		
18:00	87.52	82.26	651.16	658.28	747.23	735.30	197.89	204.78	308.26	305.19		
19:00	85.43	80.31	655.39	662.48	753.49	739.90	197.65	204.41	309.87	306.25		
20:00	83.07	78.22	652.94	660.48	749.02	738.82	195.63	202.57	308.19	304.68		
Hourly Max	**92.615**	**89.758**	**656.855**	**663.799**	**754.723**	**743.194**	**198.277**	**206.719**	**310.307**	**307.067**		
Hourly Min	**78.279**	**77.661**	**632.328**	**638.525**	**727.533**	**714.327**	**194.255**	**201.865**	**300.022**	**297.766**		
Hourly Avg	**86.083**	**83.343**	**648.220**	**652.329**	**742.904**	**731.176**	**196.853**	**204.536**	**306.619**	**303.336**		

Time	1A AH GAS DP INWC 1CI.PA.Q70.A.V	1B AH GAS DP INWC 1CI.PA.R60.A.V	1A AH XRATIO (NA) 1CA.XA.QX0.A.V	1B AH XRATIO (NA) 1CA.XA.RX0.A.V	1A AH GAS SIDE EFFICIENCY % 1CA.GA.Q7E.A.V	1B AH GAS SIDE EFFICIENCY % 1CA.GA.R7E.A.V	1A COAL BURN TONS 1V2170.S	1B COAL BURN TONS 1V2171.S	1C COAL BURN TONS 1V2172.S	1D COAL BURN TONS 1V2173.S	1E COAL BURN TONS 1V2174.S	1F COAL BURN TONS 1V2175.S
8:00	7.74	4.67	0.75	0.72	64.14	63.40	62.70	63.05	62.80	62.85	62.75	0.00
9:00	7.77	4.95	0.75	0.72	64.03	63.27	63.10	63.40	63.10	63.20	63.05	0.00
10:00	7.91	4.69	0.75	0.72	63.74	63.16	63.20	63.50	63.25	63.30	63.15	0.00
11:00	8.01	4.98	0.75	0.72	63.51	62.96	62.90	63.20	62.95	63.00	62.85	0.00
12:00	8.12	4.88	0.74	0.71	63.12	62.56	63.25	63.55	63.25	63.35	63.20	0.00
13:00	8.07	5.01	0.73	0.71	62.70	62.25	63.30	63.60	63.40	63.40	63.30	0.00
14:00	8.05	4.90	0.74	0.71	62.96	62.32	63.65	63.05	62.75	62.80	62.75	0.00
15:00	8.06	4.76	0.73	0.71	62.92	62.45	65.65	62.85	62.60	62.65	62.55	0.00
16:00	7.97	4.91	0.74	0.71	63.11	62.62	65.60	62.75	62.55	62.55	62.45	0.00
17:00	7.96	5.08	0.74	0.71	63.15	62.48	65.85	63.05	62.80	62.85	62.75	0.00
18:00	8.00	5.12	0.74	0.71	63.17	62.46	65.85	63.01	62.80	62.81	62.75	0.00
19:00	8.05	5.15	0.74	0.71	62.93	62.34	65.83	63.03	62.77	62.82	62.72	0.00
20:00	8.06	5.10	0.73	0.70	62.73	62.30	65.70	62.90	62.60	62.65	62.55	0.00
Hourly Max	**8.739**	**5.594**	**0.754**	**0.725**	**64.100**	**63.378**	**65.850**	**63.050**	**62.800**	**62.850**	**62.750**	**0.000**
Hourly Min	**7.411**	**4.169**	**0.725**	**0.700**	**62.389**	**62.202**	**65.517**	**62.686**	**62.417**	**62.467**	**62.367**	**0.000**
Hourly Avg	**8.006**	**4.958**	**0.739**	**0.711**	**63.173**	**62.583**	**65.787**	**62.971**	**62.725**	**62.760**	**62.669**	**0.000**

Columbia Unit 1 19-Oct-99

Heat Flux Hourly Performance Report

Hour: 8
Start Time: 10/19/1999 0:00
Increment: 1:00

Time	CALC. FUEL HEAT INPUT MMBTU 1CC.JZ.PG0.A.V	1AFEGT-FIX.V	1FLUXE1-FIX.V	1FLUXE2FIX.V	1FLUXE3-FIX.V	1FLUXE4-FIX.V	1FLUXN1-FIX.V	1FLUXN2-FIX.V	1FLUXN3-FIX.V	1FLUXN4-FIX.V	1FLUXS1-FIX.V	1FLUXS2-FIX.V
8:00	5,290.40	2,537.72	54.55	56.54	58.57	54.00	54.00	58.69	59.80	56.83	57.57	57.36
9:00	5,308.74	2,548.17	41.90	50.19	54.28	54.22	54.22	56.36	60.22	50.05	57.79	61.41
10:00	5,303.00	2,563.92	58.85	47.60	54.63	58.70	58.70	55.89	61.95	52.02	65.24	63.74
11:00	5,341.06	2,575.54	62.25	66.93	46.58	54.12	54.12	61.82	59.88	50.90	61.12	63.24
12:00	5,364.79	2,579.37	56.51	60.46	57.60	60.43	60.43	57.38	64.57	49.72	56.06	60.92
13:00	5,352.55	2,572.89	56.28	63.26	54.53	58.42	58.42	57.96	62.86	53.71	58.47	63.17
14:00	5,364.71	2,567.11	61.44	67.23	55.55	56.29	56.29	60.88	62.03	51.90	59.56	64.46
15:00	5,371.08	2,562.47	59.00	63.74	57.42	56.11	56.11	60.35	61.00	52.19	56.50	58.94
16:00	5,389.27	2,570.80	59.00	60.66	57.77	60.13	60.13	58.23	66.52	52.52	53.00	58.96
17:00	5,372.50	2,574.31	54.72	60.06	51.66	60.30	60.30	59.03	64.38	52.09	63.19	64.56
18:00	5,376.15	2,579.44	64.16	69.13	50.11	58.85	58.85	60.51	62.12	53.09	60.49	67.98
19:00	5,374.38	2,580.07	62.15	69.04	49.67	60.65	60.65	60.00	62.29	55.69	50.21	65.50
20:00	5,365.80	2,582.89	58.43	66.15	57.96	59.63	59.63	59.18	63.10	56.76	51.63	62.59
Hourly Max	**5500.895**	**2605.520**	**73.000**	**80.000**	**72.000**	**71.000**	**60.646**	**76.000**	**73.000**	**75.000**	**79.000**	**74.000**
Hourly Min	**5225.766**	**2521.470**	**29.000**	**44.000**	**41.000**	**32.000**	**54.000**	**49.000**	**55.000**	**40.000**	**29.000**	**47.000**
Hourly Avg	**5356.950**	**2572.760**	**58.699**	**62.545**	**53.881**	**58.326**	**57.834**	**59.021**	**62.499**	**52.772**	**58.028**	**63.142**

Time	1FLUXS3-FIX.V	1FLUXS4-FIX.V	1FLUXW1-FIX.V	1FLUXW2-FIX.V	not archived prior to 10-20-99 in PI 1FLUXW3-FIX.V	1FLUXW4-FIX.V
8:00	48.62	54.43	56.40	64.50	0.00	56.36
9:00	41.80	46.67	50.45	56.17	0.00	57.00
10:00	56.11	52.40	52.48	52.07	0.00	53.84
11:00	51.63	52.21	61.23	68.45	0.00	50.76
12:00	54.65	53.24	58.13	62.69	0.00	52.11
13:00	56.48	51.35	56.89	64.57	0.00	58.10
14:00	54.51	50.18	55.36	69.13	0.00	53.47
15:00	54.60	52.68	61.76	71.84	0.00	55.47
16:00	58.77	53.80	52.26	65.81	0.00	54.42
17:00	56.33	53.91	55.93	61.35	0.00	57.50
18:00	55.00	52.71	53.93	66.95	0.00	53.12
19:00	56.79	53.43	52.50	70.63	0.00	56.27
20:00	57.85	54.98	51.79	69.05	0.00	56.41
Hourly Max	**70.000**	**71.000**	**67.000**	**84.000**	**0.000**	**67.000**
Hourly Min	**39.000**	**40.000**	**37.000**	**48.000**	**0.000**	**43.000**
Hourly Avg	**55.031**	**52.480**	**55.483**	**65.213**	**0.000**	**54.803**

SUMMARY OF RESULTS CALCULATIONS

$$Vm\,(std) = 17.647 \times Vm \times \left[\frac{P_{bar} + \frac{DH}{13.6}}{(460 + Tm)}\right] \times Y$$

$$Vw\,(std) = 0.0471 \times Vlc$$

Vlc = water + silica net

$$Bws = \left[\frac{Vw\,(std)}{Vw\,(std) + Vm\,(std)}\right]$$

$$Md = (0.44 \times \%CO_2) + (0.32 \times \%O_2) + [0.28 \times (100 - \%CO_2 - \%O_2)]$$

$$MS = Md \times (1 - Bws) + (18 \times Bws)$$

$$Vs = \sqrt{\frac{(Ts + 460)}{Ms \times Ps}} \times \sqrt{DP} \times Cp \times 85.49$$

Cp = pitot tube correction factor
Ps = absolute flue gas pressure
Ms = molecular weight of gas (lb/lb mole)
Md = dry molecular weight of gas (lb/lb mole)
Bws = water vapor in gas stream proportion by volume

$$Acfm = Vs \times Area\,(of\ stack\ or\ duct) \times 60$$

$$Dscfm = Acfm \times 17.647 \times \left[\frac{Ps}{(460 + Ts)}\right] \times (1 - Bws)$$

$$Scfm = Acfm \times 17.647 \times \left[\frac{Ps}{(460 + Ts)}\right]$$

$$Scfh = Scfm \times 60 \frac{min}{hr}$$

©Mostardi-Platt Associates, Inc.

CALCULATION FORMULAS

1. $$V_{m(std)} = V_m Y \left(\frac{T_{std}}{T_m}\right)\left(\frac{P_{bar} + \frac{\Delta H}{13.6}}{P_{std}}\right) = K_1 V_m Y \frac{P_{bar} + \frac{\Delta H}{13.6}}{T_m}$$

2. $$V_{w(std)} = V_{lc}\left(\frac{\rho_w}{M_w}\right)\left(\frac{RT_{std}}{P_{std}}\right) = K_2 V_{lc}$$

3. $$B_{ws} = \frac{V_{w(std)}}{V_{m(std)} + V_{w(std)}}$$

4a. $$C_a = \frac{m_a}{V_a \rho_a}$$

4b. $$W_a = C_a V_{aw} \rho_a$$

5. $$C_S = (15.43 \text{ grains/gram})\,(m_n / V_{m(std)})$$

6. $$C_{acf} = 15.43 K_i \left(\frac{m_n P_s}{V_{w(std)} + V_{m(std)}\, T_s}\right)$$

7. $$\%EA = \left(\frac{\%O_2 - (0.5\,\%CO}{0.264\,\%N_2 - (\%O_2 - 0.5\,\%CO)}\right) \times 100$$

8. $$M_d = 0.44(\%CO_2) + 0.32(\%O_2) + 0.28(\%N_2 + \%CO)$$

9. $$M_s = M_d(1 - B_{ws}) + 18.0 B_{ws}$$

10. $$v_s = K_p C_p \sqrt{\frac{\Delta P\, T_s}{P_s M_s}}$$

11. $$Q_{acfm} = v_s A(60_{sec/min})$$

12. $$Q_{sd} = (3600_{sec/hr})(1 - B_{ws})\, v_s \left(\frac{T_{std} P_s}{T_s P_{std}}\right) A$$

13. $$E \text{ (emission rate, lbs/hr)} = Q_{std}\left(C_s / 7000 \text{ grains/lb}\right)$$

14. $$IKV = \frac{T_s V_{m(std)} P_{std}}{T_{std} v_s \theta A_n P_s 60(1 - B_{ws})} = K_4 \frac{T_s V_{m(std)}}{P_s v_s A_n \theta (1 - B_{ws})}$$

© Mostardi-Platt Associates, Inc.

NOMENCLATURE

A = Cross-sectional area of stack or duct, ft^2

A_n = Cross-sectional area of nozzle, ft^2

B_{ws} = Water vapor in gas stream, proportion by volume

C_a = Acetone blank residue concentration, g/g

C_{acf} = Concentration of particulate matter in gas stream at actual conditions, gr/acf

C_p = Pitot tube coefficient, dimensionless

C_s = Concentration of particulate matter in gas stream, dry basis, corrected to standard conditions, gr/dscf

IKV = Isokinetic sampling variance, must be $.90 \leq IKV \leq 1.10$

M_d = Dry molecular weight of gas, lb/lb-mole

m_n = Total amount of particulate matter collected, grams

M_s = Molecular weight of gas, wet basis, lb/lb-mole

M_w = Molecular weight of water, 18.0 lb/lb-mole

m_a = Mass of residue of acetone after evaporation, grams

P_{bar} = Barometric pressure at testing site, in. Hg

P_g = Static pressure of gas, in. Hg (in. H_2O/13.6)

P_s = Absolute pressure of gas, in. Hg = $P_{bar} + P_g$

P_{std} = Standard absolute pressure, 29.92 in. Hg

Q_{acfm} = Actual volumetric gas flow rate, acfm

Q_{sd} = Dry volumetric gas flow rate corrected to standard conditions, dscf/hr

R = Ideal gas constant, 21.85 in. Hg-ft^3/°R-lb-mole

T_m = Absolute dry gas meter temperature, °R

T_s = Absolute gas temperature, °R

T_{std} = Standard absolute temperature, 528°R

V_a = Volume of acetone blank, ml

V_{aw} = Volume of acetone used in wash, ml

V_{lc} = Total volume of liquid collected in impingers and silica gel, ml

V_m = Volume of gas sample as measured by dry gas meter, dcf

$V_{m(std)}$ = Volume of gas sample measured by dry gas meter, corrected to standard conditions, dscf

v_s = Gas velocity, ft/sec

$V_{w(std)}$ = Volume of water vapor in gas sample, corrected to standard conditions, scf

W_a = Weight of residue in acetone wash, grams

Y = Dry gas meter calibration factor

ΔH = Average pressure differential across the orifice meter, in. H_2O

Δp = Velocity head of gas, in. H_2O

ρ_a = Density of acetone, 0.7855 g/ml (average)

ρ_w = Density of water, 0.002201 lb/ml

θ = Total sampling time, minutes

K_1 = 17.64 °R/in. Hg

K_2 = 0.04707 ft^3/ml

K_4 = 0.09450/100 = 0.000945

K_p = Pitot tube constant, $85.49 \frac{ft}{sec}\left[\frac{(lb/lb-mole)(in.Hg)}{(°R)(in.H_2O)}\right]^{1/2}$

%EA = Percent excess air

$\%CO_2$ = Percent carbon dioxide by volume, dry basis

$\%O_2$ = Percent oxygen by volume, dry basis

%CO = Percent carbon monoxide by volume, dry basis

$\%N_2$ = Percent nitrogen by volume, dry basis

0.264 = Ratio of O_2 to N_2 in air, v/v

0.28 = Molecular weight of N_2 or CO, divided by 100

0.32 = Molecular weight of O_2 divided by 100

0.44 = Molecular weight of CO_2 divided by 100

13.6 = Specific gravity of mercury (Hg)

© Mostardi-Platt Associates, Inc.

MERCURY CALCULATIONS

Determination of Speciated Mercury

Concentration

$$\frac{\text{ug of Mercury detected} \times \frac{10^{-6}\text{g}}{\text{ug}}}{453.6\,\text{g/lb}} = \text{lbs Mercury/sample}$$

$$\frac{\text{lbs Mercury/sample}}{\text{Vm(std)}} = \text{lbs Mercury/dscf}$$

Emission Rates

$$\text{lbs Mercury/hr} = \text{lbs/dscf} \times \text{dscf/min} \times 60\ \text{min/hr}$$

$$\text{lbs Mercury}/10^{12}\,\text{Btu} = \text{lbs/dscf} \times F_d\,\text{Factor}(\text{dscf}/10^6\,\text{Btu}) \times \frac{20.9\%}{20.9\% - O_2\%} \times 10^6$$

Mercury Fractions

Elemental Mercury Catch – mercury collected in the acidified hydrogen peroxide (HNO_3-H_2O_2) and potassium permanganate (H_2SO_4-$KMnO_4$) impinger solutions.

Oxidized Mercury Catch – mercury collected in the aqueous potassium chloride (KCl) impinger solution.

Particle-bound Mercury Catch – mercury associated with the particulate matter collected in the front half of the sampling train.

Determination of Mercury Available from Coal

$$\text{lbs Mercury/hr} = \frac{\text{ug Mercury}}{\text{g Coal}}(\text{dry}) \times \frac{10^{-6}\text{g}}{\text{ug}} \times \frac{\text{lbs Coal (wet)}}{\text{hr}} \times (1 - B_{ws})\,\text{moisture corr.}$$

$$\text{lbs Mercury}/10^{12}\,\text{Btu} = \frac{\text{lbs Mercury}}{\text{hr}} \div \frac{10^{12}\,\text{Btu}}{\text{hr}}$$

© Mostardi-Platt Associates, Inc.

EMISSION RATE CALCULATIONS

A pollutant emission rate (E), expressed as pounds of pollutant per million Btu heat input from the fuel combusted can be calculated by several methods as follows:

1. $C = C_s/7000$ where, C = pollutant concentration, lb/dscf
   c_s = pollutant concentration, grains/dscf

2. If fuel flow is monitored and the fuel combusted during the test is sampled and analyzed for gross calorific value, then:

$$E = \frac{Q_{sd} C}{\text{fuel flow rate (lb / hr) GCV}} \times 10^6$$

where, E = lbs per million Btu
GCV = gross calorific value, Btu / lb
Q_{sd} = dry volumetric gas flow at standard conditions, dscf / hr

3. If an integrated gas sample is taken during the test and analyzed for $\%CO_2$ or $\%O_2$, dry basis by volume, with an Orsat gas analyzer, then

$$E = C F_c \frac{100}{(\%CO_2)} \text{ or, } E = C F \frac{20.9}{(20.9 - \%O_2)} \text{ where,}$$

$\%CO_2$ and $\%O_2$ are expressed as percent; and, for example, for subbituminous and bituminous coals:

F_c = a factor representing a ratio of the volume of carbon dioxide generated to the calorific value of the fuel combusted, 1800 scf CO_2/million Btu.

F = a factor representing a ratio of the volume of dry flue gases generated to the calorific value of the fuel combusted, 9780 dscf/million Btu.

4. If fuel sample increments are taken and composited during the test and an ultimate analysis is performed and the GCV is determined, then

$$F_c = \frac{321 \times 10^3 (\%C)}{GCV}$$ where, %C = carbon content by weight expressed as percent

$$F = \frac{[3.64 (\%H) + 1.53 (\%C) + 0.57 (\%S) + 0.14 (\%N) - 0.46 (\%O_2)]}{GVC} \times 10^6$$

where, H, C, S, N, and O are content by weight of hydrogen, carbon, sulfur, nitrogen, and oxygen (expressed as percent) respectively.

5. If fuels other than subbituminous and bituminous coals are fired, other F-factors than those above will apply; and, if combinations of different fuels are fired, the F-factors must be prorated according to the fraction of the total heat input derived from each type of fuel.

© Mostardi-Platt Associates, Inc.

MOSTARDI PLATT ASSOCIATES, INC.

TEST SUPPORT DATA

TEST RUN NO. 1

COMPANY: ALLIANT
PLANT: COLUMBIA 1
TEST LOCATION: INLET
CLIENT: ALLIANT
OPERATOR: JMP
DATE: 10/19/99
CONTROL BOX: E-15 POT. NO.: E-15
METER NO.: E-15
METER CALIBRATION FACTOR: 1.009
PITOT ID NO.: 434A
PITOT TUBE COEFFICIENT: 0.830
PORT LENGTH: 48 in.
PORT SIZE: 4 in.
PORT TYPE: NIPPLE

IMPINGER H_2O
FINAL: 499.6 ml/gm
INITIAL: 484.1 ml/gm
GAIN: 136.5 ml/gm
TOTAL H_2O COLLECTED: 149.4

SILICA GEL:
FINAL WT: 804.1 gm
INITIAL WT: 791.2 gm
WT. GAIN: 12.9 gm

DESCRIPTION OF IMPINGER H_2O:
SILICA GEL EXHAUSTED?:
IMPINGERS RECOVERED BY: JW
SILICA GEL WEIGHED BY: JW

COMMENTS & NOTES

THIMBLE NO: 052 TARE WT: 32895
FILTER NO: - TARE WT:
BAROMETRIC PRESSURE in. Hg: 29.36
FLUE PRESSURE in. H_2O: -7.8
FLUE PRESSURE in. Hg ABS: 28.79
PROBE LENGTH: 14 ft.
PROBE LINER MATERIAL: GLASS
NOZZLE IDENTIFICATION NO: #2 Set 2
CALIBRATED NOZZLE DIAMETER: 0.236
LEAK CHECK: PRE: 0.00 POST: 0.00 @ 16/16 in. Hg
DUCT SHAPE: Rect. DIAMETER: -
DUCT AREA: 972.00 sq. ft. L 13.5' W 72'
DISTURBANCE UPSTREAM: DOWNSTREAM:
TEST LENGTH: 120 min
MINUTES PER POINT: 6
TOTAL NUMBER OF TRAVERSE POINTS: 20
GAS ANALYSIS (ORSAT/FYRITE):

CO_2:	15.2	15.2	15.2
O_2:	3.8	3.8	3.8

PITOT LEAK CHECK: PRE ✓ POST ✓
ΔH@
SAMPLES REMOVED FROM SITE BY: JMP/JW

For computer data entry: Supervisor, please complete.
Do you want to enter a fuel analysis? Y ☐ N ☐
What value do you want to use? F = 9,780 F_c = 1,800 Other =
Circle to indicate "Yes" or add other value if not given.

© Mostardi-Platt Associates, Inc.

FIELD TEST DATA SHEET FOR ISOKINETIC SAMPLING

MOSTARDI-PLATT ASSOCIATES, INC.

PROJECT ALLIANT COLUMBIA 1
TEST RUN NO. 1
TEST LOCATION LINE 3

DATE 10/19/99 PAGE 1 OF 1

Port-Point No.	Velocity Head (P) in. H_2O	$\sqrt{P}$	Clock Time 24 hr.	Meter Volume (Vm) ft^3	1.06 Orifice (H) in. H_2O	Stack Temp (t_s) °F	Meter Temp. (t_m) Inlet °F	Meter Temp. (t_m) Outlet °F	0.58 Meter Rate cfm	Pump Vacuum in. Hg	Notes	Probe Temp. °F	Filter Holder Temp. °F	Impinger Outlet Temp. °F
1-1	0.45	0.671	0845	71.44	048	768	47	45	0.39	2.0		232	235	44
2	0 45	0.671	0851	73.80	0 48	776	48	45	0 39		73.78	235	235	44
3	0 42	0.646	0857	76.50	0.45	762	51	46	038		76.12	233	236	44
4	0.35	0592	0903	78.40	0 37	759	52	46	0 34		78.40	233	237	45
5	0. 33	0574	0909	80.35	035	756	53	47	0.33		80 44	231	242	46
	(-080)		0915	82.60							82.42			
2-1	0 40	0632	0926	83.40	042	767	54	49	037			231	237	45
2	0 43	0.656	0932	85 48	0.46	769	54	50	038	4 0	85 62	231	237	46
3	0 40	0637	0938	87.70	0 42	762	56	50	0 37		87. 90	231	230	46
4	0 35	0597	0944	90.00	0.37	762	58	51	0.34		90 12	230	230	47
5	0 35	0 597	0950	92.20	0.37	760	58	52	0 34		92.16	230	240	48
	(-0.50)		0956	94.30							94.20			
3-1	0 40	0.632	0958	94.80	0 42	767	58	52	0.37	5.0		235	245	49
2	0.40	0.632	1004	97.07	0 42	767	59	53	0.37		97.02	235	240	48
3	0.47	0.686	1010	99.30	0 50	767	60	53	0.40		99 24	235	240	49
4	0.57	0 721	1016	101.70	0.55	767	60	53	0.42		101.64	235	248	49
5	0 35	0592	1022	104.10	0 37	762	59	54	0 34		104. 16	235	249	50
	(-0.20)		1028	106 20							106 20			
4-1	0 45	0.671	1030	106.40	0 48	769	58	53	0 39	5.0		234	250	50
2	0.50	0.709	1036	108 60	0 53	772	59	54	0.41		108.74	235	250	51
3	0.35	0.592	1042	111.10	0 37	771	60	54	0 34		111.20	235	240	51
4	0. 30	0.548	1048	113.30	0 32	767	60	54	0 32	6.0	113.24	235	245	54
5	0 30	0 548	1054	115.30	0 32	769	60	54	0 32		115.16	233	253	55
			1100	117.25							117 08			
				-71.44										
				- 1.50										
		12.589			8.45	15314	2139							
		0.6295		44.31	0423	765.7	53.5							
						12257	513.5							

© Mostardi Platt Associates, Inc.

MOSTARDI-PLATT ASSOCIATES, INC.
TEST SUPPORT DATA

TEST RUN NO. 2

COMPANY: ALLIANT
PLANT: COLUMBIA 1
TEST LOCATION: INLET
CLIENT: ALLIANT
OPERATOR: JMP
DATE: 10/19/99
CONTROL BOX: E-15 POT. NO.: E-15
METER NO.: E-15
METER CALIBRATION FACTOR: 1.009
PITOT ID NO.: 434A
PITOT TUBE COEFFICIENT: 0.830
PORT LENGTH: 48 4 in.
PORT SIZE: 5" in.
PORT TYPE: NIPPLE

IMPINGER H_2O / SILICA GEL:
FINAL: 4793.1 ml/gm FINAL WT: 724.3 gm
INITIAL: 4651 ml/gm INITIAL WT: 712.8 gm
GAIN: 142.1 ml/gm WT. GAIN: 11.5 gm
TOTAL H_2O COLLECTED: 153.6
DESCRIPTION OF IMPINGER H_2O:
SILICA GEL EXHAUSTED?:
IMPINGERS RECOVERED BY: JW
SILICA GEL WEIGHED BY: JW

THIMBLE NO: 049 TARE WT: 3.5580
FILTER NO: — TARE WT: —
BAROMETRIC PRESSURE in. Hg: 29.36
FLUE PRESSURE in. H_2O: -7.8
FLUE PRESSURE in. Hg ABS: 28.79
PROBE LENGTH: 14 ft.
PROBE LINER MATERIAL: GLASS
NOZZLE IDENTIFICATION NO: #2 Set #2
CALIBRATED NOZZLE DIAMETER: 0.236
LEAK CHECK: PRE: 0.00 POST: 0.00 @ 16/16 in. Hg
DUCT SHAPE: Rect DIAMETER: —
DUCT AREA: 972.00 sq. ft. L 135' W 72'
DISTURBANCE UPSTREAM: DOWNSTREAM:
TEST LENGTH: 120 min
MINUTES PER POINT: 6
TOTAL NUMBER OF TRAVERSE POINTS: 20
GAS ANALYSIS (ORSAT/FYRITE):

CO_2:	15.3	15.3	15.3
O_2:	4.0	4.0	4.0

PITOT LEAK CHECK: ✓ PRE ____ POST ✓
ΔH@
SAMPLES REMOVED FROM SITE BY: JMP / JW

COMMENTS & NOTES

For computer data entry: Supervisor, please complete.
Do you want to enter a fuel analysis? Y ☐ N ☐
What value do you want to use? F = 9,780 F_c = 1,800 Other = _____
Circle to indicate "Yes" or add other value if not given.

© Mostardi-Platt Associates, Inc.

FIELD TEST DATA SHEET FOR ISOKINETIC SAMPLING

MOSTARDI-PLATT ASSOCIATES, INC.

PROJECT ALLIANT COLUMBIA 1

TEST RUN NO. 2

TEST LOCATION INLET

DATE 10/19/99 PAGE 1 OF 1

Port-Point No.	Velocity Head (P) in. H_2O	$\sqrt{P}$	Clock Time 24 hr.	Meter Volume (Vm) ft^3	1.06 Orifice (H) in. H_2O	Stack Temp (t_s) °F	Meter Temp. (t_m) Inlet °F	Meter Temp. (t_m) Outlet °F	0.59 Meter Rate cfm	Pump Vacuum in. Hg	Notes	Probe Temp. °F	Filter Holder Temp. °F	Impinger Outlet Temp. °F
1-1	043	0.656	1215	18.83	0.46	765	65	61	037	3		237	234	59
2	0.43	0.656	1221	21.20	0.46	761	66	61	0.39		21.05	238	233	59
3	040	0.632	1227	23.45	0.43	766	66	61	037		23.39	238	233	58
4	035	0.592	1233	25.65	0.38	764	67	62	035		25.61	237	233	58
5	035	0.592	1239	27.70	038	759	68	62	035		27.71	237	234	57
	(-1.95)		1245	29.75							29.87			
2-1	042	0.648	1253	31.70	045	752	67	62	0.38	5.0		237	235	56
2	040	0.632	1259	34.03	043	757	68	63	037		33.98	237	237	55
3	040	0.632	1305	36.22	043	758	69	63	0.37		36.20	238	238	55
4	036	0.600	1311	38.40	0.39	754	68	63	0.35		38.42	238	238	56
5	036	0.600	1316	40.45	039	753	69	63	035		40.52	237	239	57
	(-0.32)		1323	42.60							42.62			
3-1	040	0.632	1325	42.97	0.43	749	69	63	037	5.5		237	238	55
2	040	0.632	1331	45.10	043	754	70	64	037		45.14	237	239	55
3	045	0.671	1337	47.38	049	757	70	64	0.40		47.36	238	239	54
4	053	0.728	1343	49.70	057	758	70	64	043		49.76	238	239	54
5	048	0.693	1349	52.20	052	760	70	64	0.41		52.34	238	238	55
	(-0.20)		1355	54.80							54.80			
4-1	040	0.632	1357	55.00	0.43	761	68	63	037	6.0		237	240	55
2	040	0.632	1403	57.20	043	759	68	64	037		57.22	238	237	54
3	050	0.707	1409	59.50	0.54	759	69	63	042		59.44	238	239	54
4	0.50	0.707	1415	61.90	054	754	68	63	0.42		61.96	238	239	54
5	030	0.548	1421	64.32	0.32	755	68	63	032		64.48			
			1427	66.27							66.40			
				-18.83										
				-2.47										
		12.872			8.90	15155	26 1C							
		0.6411		44.97	0.445	757.8	65.5							
						1217.8	525.5							

© Mostardi-Platt Associates, Inc.

MOSTARDI-PLATT ASSOCIATES, INC.
TEST SUPPORT DATA

TEST RUN NO. 3

COMPANY: ALLIANT
PLANT: COLUMBIA 1
TEST LOCATION: INLET
CLIENT: ALLIANT
OPERATOR: JAP
DATE:
CONTROL BOX: E-15 POT. NO.: E-15
METER NO.: E-15
METER CALIBRATION FACTOR: 1.009
PITOT ID NO.: 434A
PITOT TUBE COEFFICIENT: 0.830
PORT LENGTH: 48 in.
PORT SIZE: 4 in.
PORT TYPE: NIPPLE

IMPINGER H_2O
FINAL: 4992.8 ml/gm
INITIAL: 4874.1 ml/gm
GAIN: 118.7 ml/gm

SILICA GEL:
FINAL WT: 805.0 gm
INITIAL WT: 795.6 gm
WT. GAIN: 9.4 gm

TOTAL H_2O COLLECTED: 128.1
DESCRIPTION OF IMPINGER H_2O:
SILICA GEL EXHAUSTED?:
IMPINGERS RECOVERED BY: JW
SILICA GEL WEIGHED BY: JW

COMMENTS & NOTES

THIMBLE NO: 051 TARE WT: 3.4255
FILTER NO: — TARE WT: —
BAROMETRIC PRESSURE in. Hg: 29.36
FLUE PRESSURE in. H_2O: -7.8
FLUE PRESSURE in. Hg ABS: 28.79
PROBE LENGTH: 14 ft.
PROBE LINER MATERIAL: GLASS
NOZZLE IDENTIFICATION NO: #2 Set #2
CALIBRATED NOZZLE DIAMETER: 0.236
LEAK CHECK: PRE: 0.00 POST: 0.00 @ 14/18 in. Hg
DUCT SHAPE: Rect DIAMETER: —
DUCT AREA: 972.00 sq. ft. L 135" W 72"
DISTURBANCE UPSTREAM: DOWNSTREAM:
TEST LENGTH: 120 min
MINUTES PER POINT: 6
TOTAL NUMBER OF TRAVERSE POINTS: 20
GAS ANALYSIS (ORSAT/FYRITE):
CO_2: 15.0 15.0 15.0
O_2: 4.2 4.2 4.2

PITOT LEAK CHECK: PRE ✓ POST ✓
ΔH@ ✓
SAMPLES REMOVED FROM SITE BY: JAP/JW

For computer data entry: Supervisor, please complete.
Do you want to enter a fuel analysis? Y ☐ N ☐
What value do you want to use? F = 9,780 F_c = 1,800 Other = _____
Circle to indicate "Yes" or add other value if not given.

© Mostardi-Platt Associates, Inc.

FIELD TEST DATA SHEET
FOR ISOKINETIC SAMPLING

MOSTARDI-PLATT ASSOCIATES, INC.

PROJECT Alliant Columbia 1
TEST RUN NO. 3
TEST LOCATION Inlet

DATE 10/19/99 PAGE 1 OF 1

Port-Point No.	Velocity Head (P) in. H_2O	$\sqrt{P}$	Clock Time 24 hr.	Meter Volume (Vm) ft^3	1.08 Orifice (H) in. H_2O	Stack Temp (t_s) °F	Meter Temp. (t_m) Inlet °F	Meter Temp. (t_m) Outlet °F	0.59 Meter Rate cfm	Pump Vacuum in. Hg	Notes	Probe Temp. °F	Filter Holder Temp. °F	Impinger Outlet Temp. °F
1-1	0.40	0.632	1530	67.00	0.43	764	59	57	0.37	4.0		244	244	56
2	0.40	0.632	1536	69.22	0.43	767	59	57	0.37		69.22	242	243	51
3	0.43	0.656	1542	71.50	0.46	767	61	57	0.39		71.44	242	243	50
4	0.34	0.583	1548	73.80	0.37	763	61	57	0.34		73.78	241	242	49
5	0.34	0.583	1554	75.85	0.37	766	62	57	0.34		75.82	241	242	52
	-0.36		1600	77.90							77.86			
2-1	0.40	0.632	1602	78.26	0.43	767	63	58	0.37	5.0		239	241	49
2	0.40	0.632	1608	80.54	0.43	766	64	58	0.37		80.48	240	243	49
3	0.36	0.600	1614	82.70	0.39	768	65	59	0.35		82.70	240	241	49
4	0.32	0.566	1620	84.77	0.35	765	65	59	0.33		84.80	241	243	48
5	0.32	0.566	1626	86.75	0.35	761	63	59	0.33		86.78	241	242	47
	-0.46		1632	88.72							88.76			
3-1	0.40	0.632	1634	89.18	0.43	763	61	58	0.37	5.5		240	234	47
2	0.42	0.648	1640	91.45	0.45	768	61	57	0.38		91.40	242	242	47
3	0.45	0.671	1646	93.70	0.49	769	61	57	0.40		93.68	242	243	47
4	0.52	0.721	1652	96.00	0.56	773	62	57	0.43		96.08	245	242	47
5	0.50	0.707	1658	98.50	0.54	772	62	57	0.42		98.66	242	242	47
	-0.25		1704	101.10							101.18			
4-1	0.42	0.648	1706	101.35	0.45	773	61	56	0.38			241	243	48
2	0.40	0.632	1712	103.60	0.43	771	60	56	0.37		103.63	241	243	47
3	0.45	0.671	1718	105.75	0.49	774	60	56	0.40		105.85	241	240	47
4	0.50	0.707	1724	108.10	0.54	775	61	56	0.42		108.25	243	235	48
5	0.35	0.592	1730	110.50	0.38	771	60	56	0.35		110.77	242	235	48
			1736	112.65							112.87			
				-67.00										
				-1.07										
		12.711			8.37	15363	23.75							
		0.6356		44.58	0.419	768.2	59.4							
						1228.2	519.4							

Form 1026 [Rev. 5/27]

© Mostardi Platt Associates, Inc.

PITOT TRAVERSE DATA

Project: ALLIANT - COLUMBIA 1

Location: INLET

Date: 10/18/99 Test No: NULL PT Time: 5:18 pm

Point No.	ΔP	$\sqrt{\Delta P}$	t_s	α	Point No.	ΔP	$\sqrt{\Delta P}$	t_s	α
1-1	0.60	0.775	780	0					
2	0.62	0.787	779	0					
3	0.58	0.762	776	5					
4	0.45	0.671	774	10					
2-1	0.42	0.648	775	0					
2	0.40	0.632	770	0					
3	0.35	0.592	765	5					
4	0.25	0.500	754	15					
3-1	0.40	0.632	752	0					
2	0.40	0.632	757	0					
3	0.46	0.678	756	0					
4	0.38	0.616	754	5					
4-1	0.65	0.806	754	0					
2	0.62	0.787	757	10					
3	0.64	0.800	759	10					
4	0.60	0.775	759	10					
		0.693	764						

P_{bar}_____ "Hg Static_____ "H_2O P_g_____ "Hg P_s_____ "Hg Pitot ID_____ C_p_____ Temp. ID_____

0.44 × _____ $\%CO_2$ = _____ $\sqrt{\Delta P}$ _____ t_s_____ °F T_____ °R Flue Area _____ ft^2

0.32 × _____ $\%O_2$ = +_____ Duct Dimensions _____

0.28 × _____ $\%N_2$ = +_____ B_{ws}_____ 1 - B_{ws}_____ Disturbance: Upstream _____

(_____Md × _____1-Bws) + (18 × _____Bws) = _____(Ms) Downstream _____

$$v_s = 85.49 \times \_\_\_\_ Cp \times \sqrt{\frac{(\_\_\_\_\_)Ts\ °R}{\_\_\_\_ Ms \times \_\_\_\_ Ps}} \times \_\_\_\_ \sqrt{\Delta P} = \_\_\_\_ ft/sec\,(Vs)$$

Q_{acfm} = _____ Vs × _____ Flue Area × 60 = _____acfm Port Length_____Inches

$$Q_{dscfm} = 17.647 \times ACFM \times \frac{Ps}{Ts\ °R} = \_\_\_\_\_ SCFM$$

$$Q_{dscfm} = 17.647 \times ACFM \times \frac{Ps}{Ts\ °R} \times (1\text{-}Bws) = \_\_\_\_\_ DSCFM$$

Pre-test leak check ____"H_2O

Post-test leak check ____"H_2O

Data Taken By: _____

Form 1012 [Rev. 5/97]

©Mostardi-Platt Associates, Inc.

MOSTARDI-PLATT ASSOCIATES, INC.
TEST SUPPORT DATA

TEST RUN NO. 1 - Hg SPECIATION

COMPANY: ALLIANT - COLUMBIA POWER STATION
PLANT: ALLIANT - COLUMBIA POWER STATION
TEST LOCATION: UNIT 1 STACK (OUTLET)
CLIENT: ALLIANT - COLUMBIA POWER STATION
OPERATOR: J. GEIGER
DATE: 10/19/99
CONTROL BOX: E-25 POT. NO.: E-25
METER NO.: E-25
METER CALIBRATION FACTOR: 1.008
PITOT ID NO.: 541A
PITOT TUBE COEFFICIENT: 0.837
PORT LENGTH: 7 in.
PORT SIZE: 4 in.
PORT TYPE: FLANGE

IMPINGER H_2O / SILICA GEL:
FINAL: 4913.1 ml/gm — FINAL WT: 760.3 gm
INITIAL: 4707.6 ml/gm — INITIAL WT: 739.8 gm
GAIN: 205.5 ml/gm — WT. GAIN: 20.5 gm
TOTAL H_2O COLLECTED: 226.0
DESCRIPTION OF IMPINGER H_2O:
SILICA GEL EXHAUSTED?:
IMPINGERS RECOVERED BY: JW
SILICA GEL WEIGHED BY: JW

COMMENTS & NOTES

THIMBLE NO: 050 TARE WT: 3.2575
FILTER NO: — TARE WT: —
BAROMETRIC PRESSURE in. Hg: 29.36
FLUE PRESSURE in. H_2O: -2.4
FLUE PRESSURE in. Hg ABS: 29.18
PROBE LENGTH: 8.5 ft.
PROBE LINER MATERIAL: GLASS
NOZZLE IDENTIFICATION NO: N/A
CALIBRATED NOZZLE DIAMETER: 0.180
LEAK CHECK: PRE: 0.008 POST: 0.005 @ 11/6 in. Hg
DUCT SHAPE: CIRCULAR DIAMETER: 21'
DUCT AREA: 346.36 sq. ft. L W
DISTURBANCE UPSTREAM: 2.3 DOWNSTREAM: 18.0
TEST LENGTH: 120 min
MINUTES PER POINT: 5
TOTAL NUMBER OF TRAVERSE POINTS: 24
GAS ANALYSIS (ORSAT/FYRITE):
CO_2: 12.7 12.5 12.2
O_2: 6.1 6.0 5.8

PITOT LEAK CHECK: PRE ✓ POST ✓
ΔH@ 1.830
SAMPLES REMOVED FROM SITE BY: JW

For computer data entry: Supervisor, please complete.
Do you want to enter a fuel analysis? Y ☐ N ☐
What value do you want to use? F = 9,780 F_c = 1,800 Other = _____
Circle to indicate "Yes" or add other value if not given.

Form 1053 [Rev. 6/97]

© Mostardi-Platt Associates, Inc.

FIELD TEST DATA SHEET
FOR ISOKINETIC SAMPLING

MOSTARDI-PLATT ASSOCIATES, INC.

PROJECT ALLIANT COLUMBIA POWER STATION
TEST RUN NO. #1 - Hg SPECIATION
TEST LOCATION UNIT #1, OUTLET STACK

DATE 19OCT99 PAGE 1 OF 2

Port-Point No.	Velocity Head (P) in. H_2O	$\sqrt{P}$	Clock Time 24 hr.	Meter Volume (Vm) ft^3	.652 Orifice (H) in. H_2O	Stack Temp (t_s) °F	Meter Temp. (t_m) Inlet °F	Meter Temp. (t_m) Outlet °F	.452 Meter Rate cfm	Pump Vacuum in. Hg	x5 Notes		Probe Temp. °F	Filter Holder Temp. °F	Impinger Outlet Temp. °F
1-1	2.2	1.483	845	880.121	1.43	311	75	76	.670	5	3.352		242	N/A	59
1-2	2.3	1.516	850	883.481	1.50	311	76	75	.685	5	3.427	883.473	244	N/A	59
1-3	2.2	1.483	855	886.932	1.43	308	76	75	.670	5	3.352	886.900	242	N/A	59
1-4	2.4	1.549	900	890.259	1.56	310	78	74	.700	5	3.501	890.252	241	N/A	58
1-5	2.4	1.549	905	893.751	1.56	310	79	75	.700	5	3.501	893.753	241	N/A	58
1-6	2.1	1.449	910	897.253	1.36	308	79	75	.655	4	3.275	897.254	243	N/A	57
	13.6	9.029	915	900.531	8.84	1858	463	450				900.529			
				20.410											
2-1	2.4	1.549	918	900.531	1.56	311	81	79	.700	5	3.501		242	N/A	58
2-2	2.4	1.549	923	904.131	1.56	314	81	78	.700	5	3.501	904.032	241	N/A	57
2-3	2.6	1.612	928	907.225	1.70	314	81	79	.729	5	3.644	907.533	243	N/A	57
2-4	2.5	1.581	933	911.232	1.63	309	81	79	.714	5	3.573	911.177	242	N/A	56
2-5	2.3	1.516	938	914.859	1.50	315	81	78	.685	5	3.427	914.750	242	N/A	57
2-6	2.2	1.483	943	918.195	1.43	313	81	78	.670	5	3.352	918.177	241	N/A	59
	14.4	9.29	948	921.520	9.38	1876	486	471				921.529			
				20.989											
3-1	2.3	1.516	951	921.520	1.49	309	80	77	.685	5	3.427		242	N/A	58
3-2	2.4	1.549	956	924.969	1.56	311	82	77	.700	5	3.501	924.947	243	N/A	59
3-3	2.3	1.516	1001	928.491	1.49	310	82	77	.685	5	3.427	928.448	240	N/A	57
3-4	2.5	1.581	1006	931.931	1.63	310	82	77	.715	5	3.573	931.875	243	N/A	57
3-5	2.7	1.643	1011	935.671	1.76	310	82	76	.742	6	3.713	935.448	242	N/A	57
3-6	2.2	1.483	1016	939.231	1.43	311	84	78	.670	5	3.352	939.161	242	N/A	56
	14.4	9.288	1021	942.529	9.36	1861	492	462				942.513			
				21.009											

Form 1026 [Rev. 5/27]

FIELD TEST DATA SHEET
FOR ISOKINETIC SAMPLING

MOSTARDI-PLATT ASSOCIATES, INC.

PROJECT ALLIANT COLUMBIA POWER STATION
TEST RUN NO. #1 - HG SPECIATION
TEST LOCATION UNIT #1, OUTLET STACK

DATE 19 OCT 99 PAGE 2 OF 2

Port-Point No.	Velocity Head (P) in. H_2O	$\sqrt{P}$	Clock Time 24 hr.	Meter Volume (Vm) ft^3	.652 Orifice (H) in. H_2O	Stack Temp (t_s) °F	Meter Temp. (t_m) Inlet °F	Meter Temp. (t_m) Outlet °F	.452 Meter Rate cfm	Pump Vacuum in. Hg	Notes (x5)		Probe Temp. °F	Filter Holder Temp. °F	Impinger Outlet Temp. °F
4-1	2.0	1.414	1024	942,529	1.30	311	82	78	.639	5	3.196		242	N/A	59
4-2	2.3	1.516	1029	945.733	1.49	312	82	77	.685	5	3.427	945.725	242	N/A	55
4-3	2.3	1.516	1034	949.159	1.49	312	83	79	.685	5	3.427	949.152	242	N/A	55
4-4	2.6	1.612	1039	952.579	1.69	312	84	79	.728	5	3.644	952.579	242	N/A	54
4-5	2.2	1.483	1044	956.237	1.43	312	84	79	.670	5	3.352	956.223	243	N/A	55
4-6	1.9	1.378	1049	959.581	1.23	311	84	79	.623	4	3.115	959.575	242	N/A	56
	13.3	8.919	1054	962.701	8.63	1870	499	471				962.690			
				20.172											
	2.32	1.521			1.51	311.04	80.5	77.25							
				82.580											
	42														

Form 1026 [Rev. 5/27]

© Mostardi-Platt Associates, Inc.

MOSTARDI-PLATT ASSOCIATES, INC.
TEST SUPPORT DATA

TEST RUN NO. 2- Hg SPECIATION

COMPANY: ALLIANT - COLUMBIA POWER STATION
PLANT: ALLIANT - COLUMBIA POWER STATION
TEST LOCATION: UNIT 1 STACK (OUTLET)
CLIENT: ALLIANT - COLUMBIA POWER STATION
OPERATOR: J. GEIGER
DATE: 10/19/99
CONTROL BOX: E-25 POT. NO.: E-25
METER NO.: E-25
METER CALIBRATION FACTOR: 1.008
PITOT ID NO.: 541A
PITOT TUBE COEFFICIENT: 0.837
PORT LENGTH: 7 in.
PORT SIZE: 4 in.
PORT TYPE: FLANGE

IMPINGER H_2O
FINAL: 4932.0 ml/gm
INITIAL: 4723.8 ml/gm
GAIN: 208.2 ml/gm
TOTAL H_2O COLLECTED: 228.6

SILICA GEL:
FINAL WT: 729.9 gm
INITIAL WT: 709.5 gm
WT. GAIN: 20.4 gm

DESCRIPTION OF IMPINGER H_2O:
SILICA GEL EXHAUSTED?:
IMPINGERS RECOVERED BY: JW
SILICA GEL WEIGHED BY: JW

COMMENTS & NOTES

THIMBLE NO: 057 TARE WT: 3.6359
FILTER NO: ~~~ TARE WT: ~~~
BAROMETRIC PRESSURE in. Hg: 29.36
FLUE PRESSURE in. H_2O: -2.4
FLUE PRESSURE in. Hg ABS: 29.18
PROBE LENGTH: 8.5 ft.
PROBE LINER MATERIAL: GLASS
NOZZLE IDENTIFICATION NO: N/A
CALIBRATED NOZZLE DIAMETER: 0.180
LEAK CHECK: PRE: 0.004 POST: 0.003 @ 11/8 in. Hg
DUCT SHAPE: CIRCULAR DIAMETER: 21'
DUCT AREA: 346.36 sq. ft. L W
DISTURBANCE UPSTREAM: 2.3 DOWNSTREAM: 18.0
TEST LENGTH: 120 min
MINUTES PER POINT: 5
TOTAL NUMBER OF TRAVERSE POINTS: 24
GAS ANALYSIS (ORSAT/FYRITE):
CO_2: 13.4 12.6 12.8
O_2: 6.0 5.8 5.5

PITOT LEAK CHECK: PRE ✓ POST ✓
ΔH@ 1.830
SAMPLES REMOVED FROM SITE BY: JW

For computer data entry: Supervisor, please complete.
Do you want to enter a fuel analysis? Y ☐ N ☐
What value do you want to use? F = 9,780 F_c = 1,800 Other = _____
Circle to indicate "Yes" or add other value if not given.

© Mostardi-Platt Associates, Inc.

FIELD TEST DATA SHEET
FOR ISOKINETIC SAMPLING

MOSTARDI-PLATT ASSOCIATES, INC.

PROJECT ALLIANT-COLUMBIA POWER STATION
TEST RUN NO. #2 - Hg SPECIATION
TEST LOCATION UNIT #1, OUTLET STACK

DATE 19 Oct 99 PAGE 1 OF 2

Port-Point No.	Velocity Head (P) in. H_2O	$\sqrt{P}$	Clock Time 24 hr.	Meter Volume (Vm) ft^3	.652 Orifice (H) in. H_2O	Stack Temp (t_s) °F	Meter Temp. (t_m) Inlet °F	Meter Temp. (t_m) Outlet °F	.452 Meter Rate cfm	Pump Vacuum in. Hg	X5 Notes		Probe Temp. °F	Filter Holder Temp. °F	Impinger Outlet Temp. °F
1-1	2.3	1.516	1215	966.136	1.49	313	76	75	.695	7	3.427		244	N/A	60
1-2	2.3	1.516	1220	969.574	1.49	312	76	74	.685	6	3.427	969.563	242	N/A	58
1-3	2.5	1.581	1225	972.989	1.63	312	78	75	.714	6	3.573	972.990	241	N/A	58
1-4	2.4	1.549	1230	976.577	1.56	313	77	75	.700	7	3.501	976.563	241	N/A	58
1-5	2.1	1.449	1235	980.133	1.36	313	78	75	.655	6	3.275	980.064	242	N/A	58
1-6	2.1	1.449	1240	983.415	1.36	310	78	75	.655	6	3.275	983.339	242	N/A	59
	(13.7)	(9.06)	1245	986.635	(8.89)	(1873)	(463)	(449)				986.614			
				(20.499)											
2-1	2.4	1.549	1248	986.635	1.56	312	80	77	.700	7	3.501		242	N/A	58
2-2	2.6	1.612	1253	990.140	1.69	310	81	79	.728	7	3.644	990.136	241	N/A	57
2-3	2.5	1.581	1258	993.791	1.63	312	82	79	.714	7	3.573	993.780	240	N/A	56
2-4	2.5	1.581	1303	997.351	1.63	313	82	79	.714	7	3.573	997.353	243	N/A	55
2-5	2.4	1.549	1308	1000.931	1.56	313	81	79	.700	6	3.501	1000.926	242	N/A	58
2-6	2.1	1.449	1313	1004.441	1.36	312	83	79	.655	6	3.275	1004.427	241	N/A	57
	(14.5)	(9.32)	1318	1007.735	(9.43)	(1872)	(489)	(472)				1007.702			
				(21.100)											
3-1	2.2	1.483	1320	7.735	1.43	311	83	79	.670	5	3.352		245	N/A	58
3-2	2.5	1.581	1325	11.144	1.63	314	82	80	.714	6	3.573	11.047	242	N/A	54
3-3	2.3	1.516	1330	14.585	1.49	314	82	79	.685	5	3.427	14.660	244	N/A	55
3-4	2.6	1.612	1335	18.155	1.69	313	81	79	.729	7	3.644	18.087	245	N/A	52
3-5	2.3	1.516	1340	21.827	1.49	313	84	80	.685	6	3.427	21.731	241	N/A	52
3-6	2.1	1.449	1345	25.102	1.37	311	83	81	.655	5	3.275	25.158	242	N/A	52
	(14.0)	(9.157)	1350	28.449	(9.10)	(1876)	(495)	(478)				28.433			
				(20.714)											

© Mostardi-Platt Associates, Inc.

FIELD TEST DATA SHEET
FOR ISOKINETIC SAMPLING

MOSTARDI-PLATT ASSOCIATES, INC.

PROJECT ALLIANT - Columbia Power STACK
TEST RUN NO. #2 - Hg SPECIATION
TEST LOCATION Unit #1, OUTLET STACK

DATE 19 Oct 99 PAGE 2 OF 2

Port-Point No.	Velocity Head (P) in. H_2O	$\sqrt{P}$	Clock Time 24 hr.	Meter Volume (Vm) ft^3	.652 Orifice (H) in. H_2O	Stack Temp (t_s) °F	Meter Temp. (t_m) Inlet °F	Meter Temp. (t_m) Outlet °F	.452 Meter Rate cfm	Pump Vacuum in. Hg	X5 Notes		Probe Temp. °F	Filter Holder Temp. °F	Impinger Outlet Temp. °F
4-1	2.3	1.516	1353	28.449	1.49	314	82	78	.685	6	3.427		245	N/A	57
4-2	2.3	1.516	1358	31.891	1.49	313	84	79	.685	6	3.427	31.876	245	N/A	57
4-3	2.0	1.414	1403	35.431	1.30	314	83	80	.639	5	3.196	35.303	247	N/A	56
4-4	2.4	1.549	1408	38.422	1.56	313	84	81	.700	7	3.501	38.499	242	N/A	55
4-5	2.1	1.449	1413	42.135	1.36	313	83	80	.655	6	3.275	42.000	245	N/A	54
4-6	2.1	1.449	1418	45.303	1.36	313	82	80	.655	6	3.275	45.275	245	N/A	54
	13.2	8.893	1423	48.563	8.56	1880	498	478				48.550			
				20.114											
	2.31	1.517			1.50	312.54	81.04	78.21							
	45			82.427											

© Mostardi-Platt Associates, Inc.

MOSTARDI-PLATT ASSOCIATES, INC.
TEST SUPPORT DATA

TEST RUN NO. 3 - Hg SPECIATION

COMPANY: ALLIANT - COLUMBIA POWER STATION
PLANT: ALLIANT - COLUMBIA POWER STATION
TEST LOCATION: UNIT 1 STACK - (OUTLET)
CLIENT: ALLIANT - COLUMBIA POWER STATION
OPERATOR: J. GEIGER
DATE: 10/19/99
CONTROL BOX: E-25 POT. NO.: E-25
METER NO.: E-25
METER CALIBRATION FACTOR: 1.008
PITOT ID NO.: 541A
PITOT TUBE COEFFICIENT: 0.837
PORT LENGTH: 7 in.
PORT SIZE: 4 in.
PORT TYPE: FLANGE

IMPINGER H_2O
FINAL: 4933.1 ml/gm
INITIAL: 4726.1 ml/gm
GAIN: 207.0 ml/gm
TOTAL H_2O COLLECTED: 228.7

SILICA GEL:
FINAL WT: 780.7 gm
INITIAL WT: 759.0 gm
WT. GAIN: 21.7 gm

DESCRIPTION OF IMPINGER H_2O:
SILICA GEL EXHAUSTED?:
IMPINGERS RECOVERED BY: JW
SILICA GEL WEIGHED BY: JW

THIMBLE NO: 055 TARE WT: 3.6036
FILTER NO: — TARE WT: —
BAROMETRIC PRESSURE in. Hg: 29.36
FLUE PRESSURE in. H_2O: -2.4
FLUE PRESSURE in. Hg ABS: 29.18
PROBE LENGTH: 8.5 ft.
PROBE LINER MATERIAL: GLASS
NOZZLE IDENTIFICATION NO: N/A
CALIBRATED NOZZLE DIAMETER: 0.180
LEAK CHECK: PRE: 0.007 POST: 0.004 @ 11/8 in. Hg
DUCT SHAPE: CIRCULAR DIAMETER: 21'
DUCT AREA: 346.36 sq. ft. L ____ W ____
DISTURBANCE UPSTREAM: 2.3 DOWNSTREAM: 18.0
TEST LENGTH: 120 min
MINUTES PER POINT: 5
TOTAL NUMBER OF TRAVERSE POINTS: 24
GAS ANALYSIS (ORSAT/FYRITE):

CO_2:	12.2	12.7	12.5
O_2:	5.9	6.1	6.0

PITOT LEAK CHECK: PRE ✓ POST ✓
ΔH@ 1.930
SAMPLES REMOVED FROM SITE BY: JW

COMMENTS & NOTES

For computer data entry: Supervisor, please complete.
Do you want to enter a fuel analysis? Y ☐ N ☐
What value do you want to use? F = 9,780 F_c = 1,800 Other = ____
Circle to indicate "Yes" or add other value if not given.

© Mostardi-Platt Associates, Inc.

FIELD TEST DATA SHEET FOR ISOKINETIC SAMPLING

MOSTARDI-PLATT ASSOCIATES, INC.

PROJECT ALLIANT - Columbia Power Stat...
TEST RUN NO. #3 - Hg SPECIATION
TEST LOCATION Unit #1, Outlet STACK

DATE 19 Oct 99 PAGE 1 OF 2

Port-Point No.	Velocity Head (P) in. H_2O	$\sqrt{P}$	Clock Time 24 hr.	Meter Volume (Vm) ft^3	.652 Orifice (H) in. H_2O	Stack Temp (t_s) °F	Meter Temp. (t_m) Inlet °F	Meter Temp. (t_m) Outlet °F	.452 Meter Rate cfm	Pump Vacuum in. Hg	X5 Notes		Probe Temp. °F	Filter Holder Temp. °F	Impinger Outlet Temp. °F
1-1	2.1	1.449	1530	48.843	1.36	313	80	75	.655	5	3.275		242	N/A	55
1-2	2.3	1.517	1535	52.234	1.49	314	81	75	.695	5	3.427	52.118	240	N/A	56
1-3	2.3	1.517	1540	55.497	1.49	313	81	77	.685	5	3.427	55.545	241	N/A	56
1-4	2.5	1.581	1545	58.991	1.63	313	82	77	.714	5	3.573	58.972	244	N/A	55
1-5	2.2	1.483	1550	62.541	1.43	313	82	76	.670	5	3.352	62.545	242	N/A	54
1-6	2.2	1.483	1555	65.994	1.43	314	82	75	.670	5	3.352	65.897	241	N/A	53
	13.6	9.03	1600	69.258	8.83	1880	488	455				69.249			
				20.415											
2-1	2.4	1.549	1603	69.258	1.56	315	82	76	.700	6	3.501		242	N/A	55
2-2	2.4	1.549	1608	72.761	1.56	314	82	75	.700	6	3.501	72.759	242	N/A	57
2-3	2.5	1.581	1613	76.355	1.63	314	81	77	.714	7	3.573	76.260	244	N/A	57
2-4	2.3	1.516	1618	79.840	1.50	314	82	78	.685	6	3.427	79.833	243	N/A	56
2-5	2.4	1.549	1623	83.261	1.56	313	83	78	.700	6	3.501	83.260	242	N/A	57
2-6	2.1	1.449	1628	86.701	1.36	314	82	79	.655	5	3.275	86.761	243	N/A	55
	14.1	9.193	1633	90.008	9.17	1884	492	463				90.036			
				20.750											
3-1	2.2	1.483	1636	90.809	1.43	314	83	78	.670	5	3.352		241	N/A	56
3-2	2.5	1.581	1641	93.415	1.63	314	82	79	.714	6	3.573	93.360	242	N/A	57
3-3	2.6	1.612	1646	96.877	1.69	314	85	78	.728	7	3.644	96.933	243	N/A	57
3-4	2.5	1.581	1651	100.583	1.63	314	84	78	.714	6	3.573	100.577	242	N/A	57
3-5	2.1	1.449	1656	104.231	1.36	314	83	77	.655	5	3.275	104.150	246	N/A	57
3-6	2.0	1.414	1701	107.444	1.30	314	83	78	.639	5	3.196	107.421	245	N/A	56
	13.9	9.12	1706	110.615	9.04	1884	506	468				110.617			
				20.607											

Form 1026 [Rev. 5/27]

© Mostardi-Platt Associates, Inc.

FIELD TEST DATA SHEET
FOR ISOKINETIC SAMPLING

MOSTARDI-PLATT ASSOCIATES, INC.

PROJECT ALLIANT - Columbia Power STATION
TEST RUN NO. #3 - Hg SPECIATION
TEST LOCATION Unit #1, OUTLET STACK

DATE 19 Oct 99 PAGE 2 OF 2

Port-Point No.	Velocity Head (P) in. H_2O	$\sqrt{P}$	Clock Time 24 hr.	Meter Volume (Vm) ft^3	.652 Orifice (H) in. H_2O	Stack Temp (t_s) °F	Meter Temp. (t_m) Inlet °F	Meter Temp. (t_m) Outlet °F	.452 Meter Rate cfm	Pump Vacuum in. Hg	x5 Notes		Probe Temp. °F	Filter Holder Temp. °F	Impinger Outlet Temp. °F
4-1	2.2	1.483	1709	110.615	1.43	314	81	78	.670	5	3.352		242	N/A	56
4-2	2.2	1.483	1714	113.975	1.43	314	82	79	.670	5	3.352	113.967	245	N/A	55
4-3	2.6	1.612	1719	117.393	1.69	314	83	79	.728	7	3.644	117.319	242	N/A	54
4-4	2.5	1.581	1724	120.799	1.63	315	83	80	.714	7	3.573	120.963	244	N/A	55
4-5	2.3	1.516	1729	124.574	1.49	315	83	81	.685	6	3.427	124.536	242	N/A	54
4-6	2.0	1.414	1734	127.950	1.30	315	84	81	.639	5	3.196	127.963	240	N/A	56
	13.8	9.089	1739	131.154	8.97	1887	496	478				131.159			
				20.539											
	2.31	1.518			1.50	313.9	82.3	77.67							
				82.311											
	48														

Form 1026 [Rev. 5/27]

© Mostardi-Platt Associates, Inc.

PITOT TRAVERSE DATA

Project: ALLIANT - COLUMBIA

Location: UNIT 1 STACK

Date: 10/18/99 Test No: 1 Time: 1450 - 1515

Point No.	ΔP	√ΔP	t_s	α	Point No.	ΔP	√ΔP	t_s	α
1-1	1.9		313	0	4-1	2.1		318	0
2	2.1		312	0	2	2.3		319	15.1
3	2.1		312	0	3	2.2		320	2
4	2.2		312	4.5	4	2.5		318	0
5	2.5		312	0	5	2.2		318	0
6	2.0		311	0	6	2.0		316	0
							1.5185	315.87	
2-1	2.5		316	2.1					
2	2.6		316	0					
3	2.6		316	0					
4	2.5		316	0					
5	2.6		314	0					
6	1.9		313	0					
3-1	2.4		317	18.0					
2	2.4		316	0					
3	2.3		318	0					
4	2.6		319	0					
5	2.8		320	0					
6	2.2		319	0					

P_{bar} 29.85 "Hg Static -2.3 "H_2O P_g ____ "Hg P_s 29.68 "Hg Pitot ID S41A C_p .837 Temp. ID E-25

0.44 × 12.0 %CO_2 = 5.28 √ΔP 1.5185 t_s 315.87 °F T 775.87 °R Flue Area 346.36 ft^2

0.32 × 6.5 %O_2 = + 2.08 Duct Dimensions 21'

0.28 × 81.5 %N_2 = + 22.82 B_{ws} .10 1 - B_{ws} .90 Disturbance: Upstream 2.3

(30.18 Md × .90 1-B_{ws}) + (18 × .10 B_{ws}) = 28.96 (Ms) Downstream 18

$$v_s = 85.49 \times .837\ Cp \times \sqrt{\frac{(775.87)\ Ts\ °R}{28.96\ Ms \times 29.68\ Ps}} \times 1.5185 \sqrt{\Delta P} = 103.23\ ft/sec\ (Vs)$$

Q_{acfm} = ____ Vs × 346.36 Flue Area × 60 = 2145348,275 acfm Port Length 7 Inches

$$Q_{dscfm} = 17.647 \times ACFM \times \frac{Ps}{Ts\ °R} = 14482503\ SCFM$$

86,895,018 SCFH

$$Q_{dscfm} = 17.647 \times ACFM \times \frac{Ps}{Ts\ °R} \times (1\text{-}Bws) = 13034225.27\ DSCFM$$

Pre-test leak check ✓ "H_2O

Post-test leak check ✓ "H_2O

Data Taken By: JG / NS

Field Engineer / Test Technician

©Mostardi-Platt Associates, Inc.

CALIBRATION PROCEDURES

PITOT TUBES

The pitot tubes used during this test program are fabricated according to the specification described and illustrated in the *Code of Federal Regulations*, Title 40, Part 60, Appendix A, Methods 1 through 5 as published in the *Federal Register*, Volume 42, No. 160; hereafter referred to by the appropriate method number. The pitot tubes comply with the alignment specifications in Method 2, Section 4; and the pitot tube assemblies are in compliance with specifications in the same section.

Pitot tube assemblies are calibrated in accordance with Method 2, Section 4, against a standard hemispherical pitot utilizing a wind tunnel meeting the specification in Method 2, Section 4.1.2.

NOZZLES

The nozzles are measured according to Method 5, Section 5.1.

TEMPERATURE SENSING DEVICES

The potentiometer and thermocouples are calibrated against a mercury thermometer in a calibration well. Alternatively, readings are checked utilizing a NBS traceable millivolt source.

DRY GAS METERS

The test meters are calibrated according to Method 5, Section 5.3 and "Procedures for Calibrating and Using Dry Gas Volume Meters as Calibration Standards" by P.R. Westlin and R.T. Shigehara, March 10, 1978.

ANALYTICAL BALANCE

The accuracy of the analytical balance is checked with Class S, Stainless Steel Type 303 weights manufactured by F. Hopken and Son, Jersey City, New Jersey.

© Mostardi-Platt Associates, Inc.

TYPE S PITOT TUBE INSPECTION DATA FORM

Pitot tube assembly level? x yes _____ no

Pitot tube openings damaged? _____ yes (explain below) x no

α_1 = 0.5 ° (<10°), α_2 = 1 ° (<10°) z = A sin γ = 0.027 (in.); (<0.125 in.)

β_1 = 0 ° (<5°), β_2 = 4 ° (<5°) w = A sin θ = 0.007 (in.); (<0.03125 in.)

γ = 2 °, θ = 0.5 °, A = 0.768 (in.) P_A = 0.38 (in.), P_B = 0.38 (in.), D_t = 0.213 (in.)

Comments: 11' 7" M5 probe

Calibration required? _____ yes x no

Pitot Tube No.: 434 Date: 07/07/1999 Name: SCK

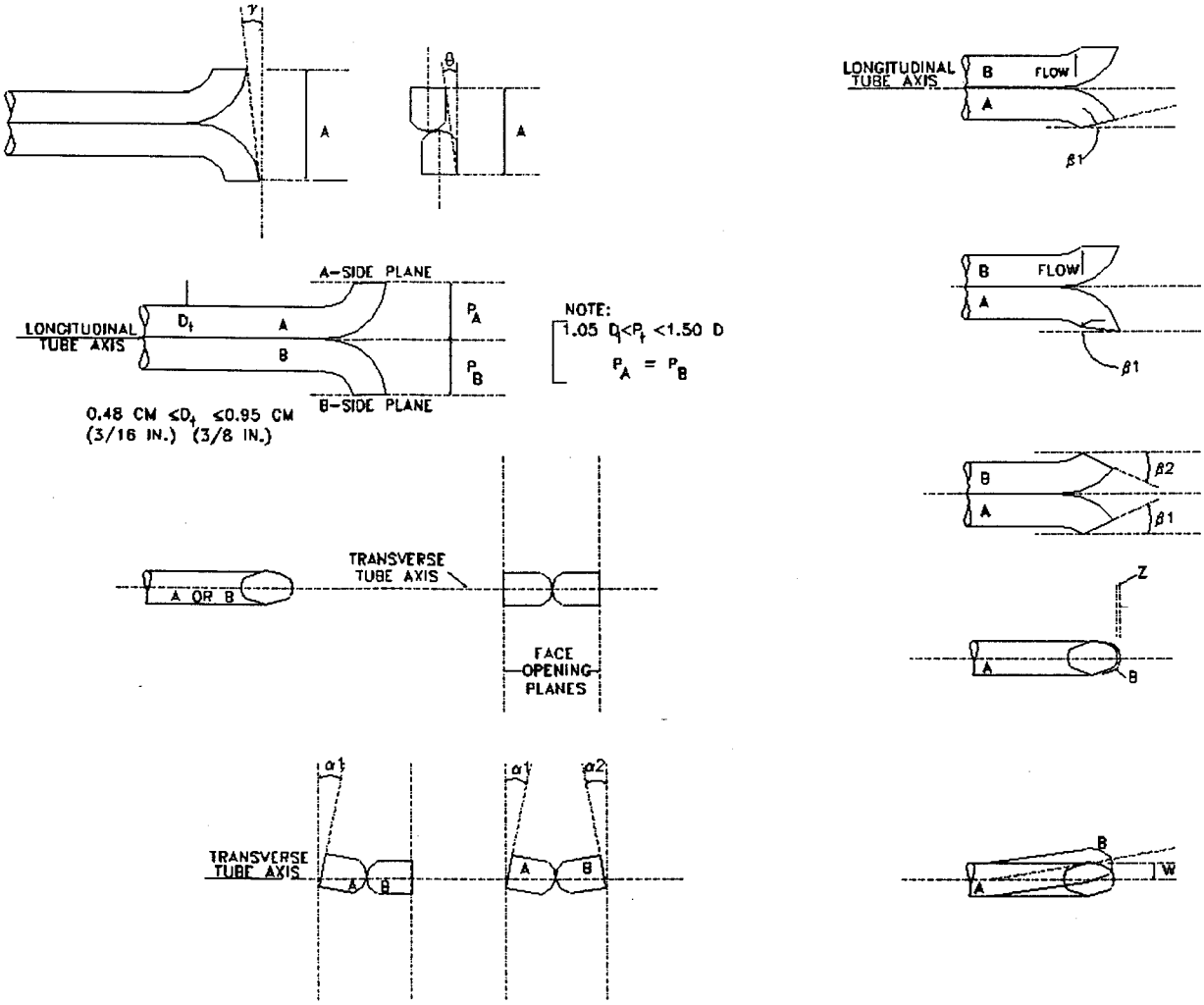

Pitot Tube Calibration Data

Calibration Pitot Tube: Type: HEMI STD Size (OD): 1/4" Pitot ID #: 16018

Type "S" Pitot Tube ID Numbe 434 (1/4") Cp(std) = 0.99

Calibration Date: 12/4/1997 Performed By: M. McIntyre

P_{std}, (in.) H_2O		A-Side Calibration		
Set Value	**Read Value**	**P_s, (in.) H_2O**	**$C_{p(S)}$ [a]**	**DEV.[b]**
0.25	0.27	0.39	0.829	0.001
0.55	0.55	0.78	0.830	0.000
0.85	0.85	1.20	0.831	0.000
1.00	1.05	1.50	0.828	0.002
2.00	2.00	2.80	0.837	0.006
3.00	3.00	4.30	0.827	0.003
		Average	0.830	0.002

P_{std}, (in.) H_2O		B-Side Calibration		
Set Value	**Read Value**	**P_s, (in.) H_2O**	**$C_{p(S)}$ [a]**	**DEV.[b]**
0.25	0.26	0.37	0.830	0.001
0.55	0.55	0.78	0.830	0.001
0.85	0.85	1.20	0.831	0.001
1.00	1.05	1.50	0.828	0.003
2.00	2.00	2.80	0.837	0.005
3.00	3.00	4.25	0.832	0.000
		Average	0.831	0.002

$\overline{C_p}(A) - \overline{C_p}(B) =$ 0.001 (must be $\leq$ 0.01)

[a] $C_{p(S)} = C_{p(std)}\sqrt{\frac{\Delta P_{std}}{\Delta P_s}}$

[b] $DEV = C_{p(S)} - \overline{C_p}$, (must be ≤ 0.01)

Pitot Tube Calibration Data

Calibration Pitot Tube: Type: std Size (OD): 1/4" Pitot ID #: 160-8

Type "S" Pitot Tube ID Numbe 541A Cp(std) = 1.00

Calibration Date: 10/8/99 Performed By: LC

P_{std}, (in.) H_2O		A-Side Calibration		
Set Value	**Read Value**	**P_s, (in.) H_2O**	**$C_{p(S)}$ [a]**	**DEV.[b]**
0.25	0.28	0.40	0.837	0.000
0.55	0.53	0.76	0.835	0.001
0.85	0.84	1.20	0.837	0.000
1.00	0.98	1.40	0.837	0.000
2.00	1.90	2.70	0.839	0.002
3.00	3.00	4.30	0.835	0.001
		Average	0.837	0.001

P_{std}, (in.) H_2O		B-Side Calibration		
Set Value	**Read Value**	**P_s, (in.) H_2O**	**$C_{p(S)}$ [a]**	**DEV.[b]**
0.25	0.28	0.40	0.837	0.000
0.55	0.53	0.76	0.835	0.001
0.82	0.84	1.20	0.837	0.000
1.00	0.98	1.40	0.837	0.000
2.00	1.90	2.70	0.839	0.002
3.00	3.00	4.30	0.835	0.001
		Average	0.837	0.001

$\overline{C_p}(A) - \overline{C_p}(B) =$ 0.000 (must be ≤ 0.01)

[a] $C_{p(S)} = C_{p(std)}\sqrt{\frac{\Delta P_{std}}{\Delta P_s}}$

[b] $DEV = C_{p(S)} - \overline{C_p}$, (must be ≤ 0.01)

Nozzle Calibration

Date: 10/18/99

Nozzle ID No.: N/A

Analyst: JJG

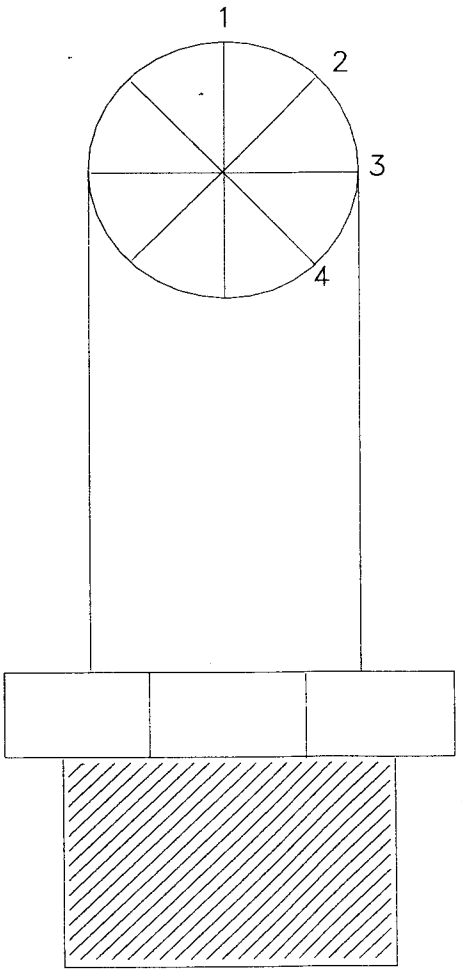

Pre Test		Post Test
0.235	1	√
0.236	2	√
0.236	3	√
0.236	4	√

Average
0.236

© Mostardi-Platt Associates, Inc.

Nozzle Calibration

Date: 10/18/99

Nozzle ID No.: N/A

Analyst: JJG

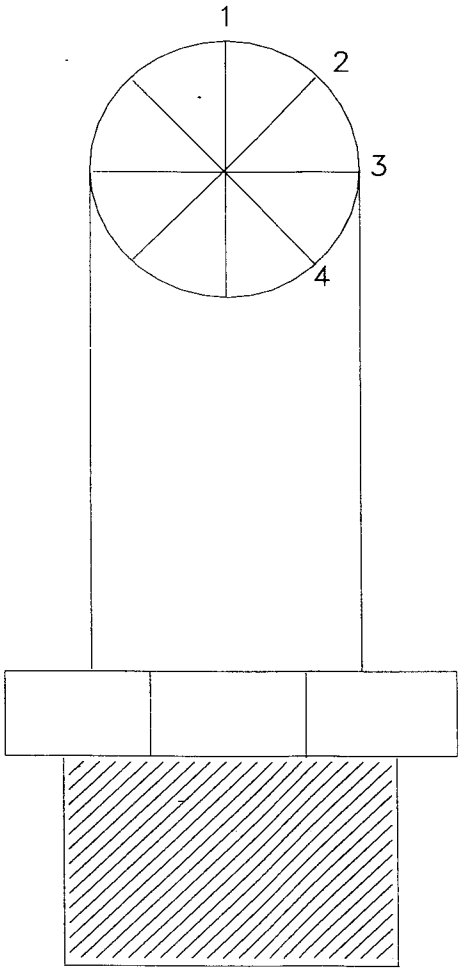

Pre Test		Post Test
0.180	1	√
0.180	2	√
0.179	3	√
0.179	4	√

Average
0.180

© Mostardi-Platt Associates, Inc.

STACK TEMPERATURE SENSOR CALIBRATION DATA FORM (FOR K-TYPE THERMOCOUPLES)

EPA Control Module Number: E15 Name: Rich Russ

Ambient Temperatu 72 °F Date: 09-24-99

Model 1061; S/N: A20821 Reference Source (T/C Calibrator): Transmation, Inc.

Date of Calibration Verification: 10/18/94

Primary Standards Directly Traceable to
National Institute of Standards and Technology (NIST)

Reference[a] Source Temperature, (°F)	Test Thermometer Temperature, (°F)	Temperature Difference,[b] %
50	50	0.000
100	100	0.000
150	150	0.000
200	200	0.000
250	250	0.000
300	300	0.000
350	350	0.000
400	400	0.000
450	450	0.000
500	500	0.000
550	550	0.000
600	600	0.000
650	650	0.000
700	700	0.000
800	800	0.000
900	900	0.000
1000	1000	0.000
1100	1100	0.000
1200	1200	0.000

[a]Every (50°F) for each reference point.

$$\frac{(\text{Ref. Temp., °F} + 460) - (\text{Test Therm. Temp., °F} + 460)}{\text{Ref. Temp., °F} + 460} * 100 <= 1.5\ \%$$

STACK TEMPERATURE SENSOR CALIBRATION DATA FORM (FOR K-TYPE THERMOCOUPLES)

EPA Control Module Number: E15 Name: Rich Russ

Ambient Temperatu 79 °F Date: 10-29-99

Model 1061; S/N: A20821 Reference Source (T/C Calibrator): Transmation, Inc.

Date of Calibration Verification: 10/18/94

Primary Standards Directly Traceable to
National Institute of Standards and Technology (NIST)

Reference[a] Source Temperature, (°F)	Test Thermometer Temperature, (°F)	Temperature Difference,[b] %
50	50	0.000
100	100	0.000
150	150	0.000
200	200	0.000
250	250	0.000
300	300	0.000
350	350	0.000
400	400	0.000
450	450	0.000
500	500	0.000
550	550	0.000
600	600	0.000
650	650	0.000
700	700	0.000
800	800	0.000
900	900	0.000
1000	1000	0.000
1100	1100	0.000
1200	1200	0.000

[a]Every (50°F) for each reference point.

$$\frac{(\text{Ref. Temp., °F} + 460) - (\text{Test Therm. Temp., °F} + 460)}{\text{Ref. Temp., °F} + 460} * 100 <= 1.5\ \%$$

STACK TEMPERATURE SENSOR CALIBRATION DATA FORM (FOR K-TYPE THERMOCOUPLES)

EPA Control Module Number: E25 Name: Rich Russ

Ambient Temperatu 68 °F Date: 09-28-99

Model 1061; S/N: A20821 Reference Source (T/C Calibrator): Transmation, Inc.

Date of Calibration Verification: 10/18/94

Primary Standards Directly Traceable to
National Institute of Standards and Technology (NIST)

Reference[a] Source Temperature, (°F)	Test Thermometer Temperature, (°F)	Temperature Difference,[b] %
50	50	0.000
100	100	0.000
150	150	0.000
200	200	0.000
250	250	0.000
300	300	0.000
350	351	0.123
400	400	0.000
450	451	0.110
500	501	0.104
550	551	0.099
600	601	0.094
650	651	0.090
700	701	0.086
800	801	0.079
900	901	0.074
1000	1001	0.068
1100	1101	0.064
1200	1201	0.060

[a]Every (50°F) for each reference point.

$$\frac{(\text{Ref. Temp., °F} + 460) - (\text{Test Therm. Temp., °F} + 460)}{\text{Ref. Temp., °F} + 460} * 100 <= 1.5\ \%$$

STACK TEMPERATURE SENSOR CALIBRATION DATA FORM (FOR K-TYPE THERMOCOUPLES)

EPA Control Module Number: E25 Name: Rich Russ

Ambient Temperatu 70 °F Date: 10-25-99

Model 1061; S/N: A20821 Reference Source (T/C Calibrator): Transmation, Inc.

Date of Calibration Verification: 10/18/94

Primary Standards Directly Traceable to
National Institute of Standards and Technology (NIST)

Reference[a] Source Temperature, (°F)	Test Thermometer Temperature, (°F)	Temperature Difference,[b] %
50	50	0.000
100	100	0.000
150	150	0.000
200	200	0.000
250	250	0.000
300	300	0.000
350	350	0.000
400	400	0.000
450	450	0.000
500	500	0.000
550	550	0.000
600	600	0.000
650	651	0.090
700	701	0.086
800	800	0.000
900	901	0.074
1000	1001	0.068
1100	1101	0.064
1200	1201	0.060

[a]Every (50°F) for each reference point.

$$\frac{(\text{Ref. Temp., °F} + 460) - (\text{Test Therm. Temp., °F} + 460)}{\text{Ref. Temp., °F} + 460} * 100 <= 1.5\ \%$$

METER BOX CALIBRATION

Dry Gas Meter No.	E15	Date:	09-24-99
Standard Meter No.	3623851	Calibrated By:	Rich Russ
Standard Meter (Yr)	1.0063	Barometric Pressure :	29.26

Formula Protection Password: MPA

Run Number		Orifice Setting in H20 Chg (H)	Standard Meter Gas Volume Vr	Dry Meter Gas Volume Vd	Standard Meter Temp. F tr	Dry Gas Meter Inlet Temp. F tdi	Dry Gas Meter Outlet Temp. F tdo	Dry Gas Meter Avg. Temp. F td	Time Min.	Time Sec.	Y	Chg (H@)
Final			80.800	25.164	74	78	75					
Inital			75.792	20.151	74	75	74					
Difference	1	0.20	5.008	5.013	74	76.5	74.5	75.5	19	13	1.001	1.698
Final			95.326	39.591	75	82	78					
Inital			89.887	34.141	75	81	77					
Difference	2	0.50	5.439	5.450	75	81.5	77.5	79.5	13	21	1.005	1.730
Final			74.419	18.788	72	78	73					
Inital			69.141	13.526	72	74	72					
Difference	3	0.70	5.278	5.262	72	76	72.5	74.25	10	53	1.006	1.707
Final			9.806	53.997	75	87	79					
Inital			4.773	48.974	75	84	79					
Difference	4	0.90	5.033	5.023	75	85.5	79	82.25	9	15	1.013	1.737
Final			102.544	46.754	75	86	78					
Inital			96.464	40.721	75	81	78					
Difference	5	1.20	6.080	6.033	75	83.5	78	80.75	9	36	1.016	1.715
Final			89.076	33.349	75	83	76					
Inital			83.868	28.194	75	81	76					
Difference	6	2.00	5.208	5.155	75	82	76	79	6	30	1.013	1.791
									Average		1.009	1.730

60

METER BOX CALIBRATION

Dry Gas Meter No.	E15	Date:	10-29-99
Standard Meter No.	3623851	Calibrated By:	Rich Russ
Standard Meter (Yr)	1.0063	Barometric Pressure :	29.46

Formula Protection Password: MPA

Run Number		Orifice Setting in H20 Chg (H)	Standard Meter Gas Volume Vr	Dry Meter Gas Volume Vd	Standard Meter Temp. F tr	Dry Gas Meter Inlet Temp. F tdi	Dry Gas Meter Outlet Temp. F tdo	Dry Gas Meter Avg. Temp. F td	Time Min.	Time Sec.	Y	Chg (H@)
Final			77.209	48.839	73	84	79					
Inital			72.169	43.761	73	83	77					
Difference	1	0.20	5.040	5.078	73	83.5	78	80.75	19	8	1.006	1.628
Final			87.842	59.476	75	88	82					
Inital			82.818	54.436	74	88	81					
Difference	2	0.50	5.024	5.040	74.5	88	81.5	84.75	12	21	1.015	1.704
Final			72.019	43.603	73	85	77					
Inital			66.954	38.566	73	82	75					
Difference	3	0.70	5.065	5.037	73	83.5	76	79.75	10	27	1.017	1.687
Final			93.873	65.529	75	91	83					
Inital			88.172	59.816	75	88	82					
Difference	4	0.90	5.701	5.713	75	89.5	82.5	86	10	27	1.016	1.705
Final			99.101	70.793	75	93	84					
Inital			94.081	65.744	75	90	83					
Difference	5	1.20	5.020	5.049	75	91.5	83.5	87.5	7	54	1.014	1.671
Final			82.635	54.228	74	90	81					
Inital			77.521	49.127	74	85	79					
Difference	6	2.00	5.114	5.101	74	87.5	80	83.75	6	26	1.016	1.785
									Average		1.014	1.697

©MOSTARDI-PLATT ASSOCIATES, INC.

VOLUME METERING SYSTEM FIELD AUDIT

Date: 09-24-99 Name: Rich Russ

EPA Control Module No.: E15 Ambient Temperature: 73 °F

Calibration (Y): 1.009 Barometric Pressure: 29.3 "Hg

Delta H: 1.73

#VALUE!

Run No.	Time (Minutes)	Gas Meter Reading/Gas Meter Temperature			Yc (Calculated)
		(Cubic Feet)	Inlet (°F)	Outlet (°F)	
1	0	12.144	77	72	1.026
	10	19.587	82	73	
	Vm=	7.443	Avg.= 76.00	536.00	
2	0	19.587	81	73	1.037
	10	26.967	83	73	
	Vm=	7.380	Avg.= 77.50	537.50	
3	0	26.967	81	73	1.035
	10	34.365	85	73	
	Vm=	7.398	Avg.= 78.00	538.00	

$$Yc = \frac{10}{Vm}\sqrt{\frac{Pbar}{0.0319Tm}}$$

Limit: 0.97Y <Yc< 1.03Y

Limit: 0.979 <Yc< 1.039

$$\text{Calc. Delta H @} = \frac{0.0319\,(\text{Delta H})(Tm)(100)}{Pbar(Y^2)(Vm^2)}$$ (From Calibration Data) = 1.607

METER BOX CALIBRATION

Dry Gas Meter No.	E25	Date:	09-28-99
Standard Meter No.	677191	Calibrated By:	Rich Russ
Standard Meter (Yr)	0.9991	Barometric Pressure :	29.50

Formula Protection Password: MPA

Run Number		Orifice Setting in H20 Chg (H)	Standard Meter Gas Volume Vr	Dry Meter Gas Volume Vd	Standard Meter Temp. F tr	Dry Gas Meter Inlet Temp. F tdi	Dry Gas Meter Outlet Temp. F tdo	Dry Gas Meter Avg. Temp. F td	Time Min.	Time Sec.	Y	Chg (H@)
Final			76.119	27.769	68	72	70					
Inital			71.049	22.707	68	71	70					
Difference	1	0.20	5.070	5.062	68	71.5	70	70.75	20	3	1.006	1.764
Final			87.545	39.149	68	74	71					
Inital			82.170	33.784	68	73	71					
Difference	2	0.50	5.375	5.365	68	73.5	71	72.25	13	50	1.009	1.863
Final			70.723	22.374	68	72	70					
Inital			64.888	16.569	68	70	69					
Difference	3	0.70	5.835	5.805	68	71	69.5	70.25	11	59	1.008	1.667
Final			93.802	45.397	68	76	72					
Inital			87.840	39.454	68	74	71					
Difference	4	0.90	5.962	5.943	68	75	71.5	73.25	11	30	1.011	1.880
Final			99.831	51.431	68	77	72					
Inital			94.525	46.111	68	75	72					
Difference	5	1.20	5.306	5.320	68	76	72	74	8	59	1.006	1.928
Final			81.631	33.238	68	74	70					
Inital			76.519	28.166	68	72	71					
Difference	6	2.00	5.112	5.072	68	73	70.5	71.75	6	36	1.010	1.877
									Average		1.008	1.830

©MOSTARDI-PLATT ASSOCIATES, INC.

METER BOX CALIBRATION

Dry Gas Meter No.	E25	Date:	10-25-99
Standard Meter No.	3623852	Calibrated By:	Rich Russ
Standard Meter (Yr)	1.0058	Barometric Pressure :	29.60

Formula Protection Password: MPA

Run Number		Orifice Setting in H20 Chg (H)	Standard Meter Gas Volume Vr	Dry Meter Gas Volume Vd	Standard Meter Temp. F tr	Dry Gas Meter Inlet Temp. F tdi	Dry Gas Meter Outlet Temp. F tdo	Dry Gas Meter Avg. Temp. F td	Time Min.	Time Sec.	Y	Chg (H@)
Final			36.847	72.800	71	74	70					
Inital			31.318	67.220	71	70	67					
Difference	1	0.20	5.529	5.580	71	72	68.5	70.25	21	54	0.989	1.786
Final			47.915	83.964	72	79	73					
Inital			42.456	78.449	72	77	71					
Difference	2	0.50	5.459	5.515	72	78	72	75	13	48	0.994	1.809
Final			31.176	66.978	71	71	67					
Inital			26.036	61.907	71	67	66					
Difference	3	0.70	5.140	5.071	71	69	66.5	67.75	10	54	1.006	1.800
Final			54.114	90.258	72	82	75					
Inital			49.070	85.131	72	79	73					
Difference	4	0.90	5.044	5.127	72	80.5	74	77.25	9	45	0.991	1.896
Final			59.450	95.678	72	84	76					
Inital			54.302	90.445	72	81	75					
Difference	5	1.20	5.148	5.233	72	82.5	75.5	79	8	42	0.994	1.926
Final			42.244	78.229	72	79	71					
Inital			37.221	73.174	71	74	70					
Difference	6	2.00	5.023	5.055	71.5	76.5	70.5	73.5	6	32	0.992	1.918
									Average		0.994	1.856

©MOSTARDI-PLATT ASSOCIATES, INC.

VOLUME METERING SYSTEM FIELD AUDIT

Date: 09-28-99 Name: Rich Russ

EPA Control Module No.: E25 Ambient Temperature: 68 °F

Calibration (Y): 1.008 Barometric Pressure: 29.5 "Hg

Delta H: 1.83

#VALUE!

Run No.	Time (Minutes)	Gas Meter Reading/Gas Meter Temperature (Cubic Feet)	Inlet (°F)	Outlet (°F)	Yc (Calculated)
1	0	61.815	76	71	1.037
	10	69.147	78	72	
	Vm=	7.332	Avg.= 74.25	534.25	
2	0	69.147	77	72	1.033
	10	76.512	79	72	
	Vm=	7.365	Avg.= 75.00	535.00	
3	0	76.512	77	72	1.028
	10	83.912	79	72	
	Vm=	7.400	Avg.= 75.00	535.00	

$$Yc = \frac{10}{Vm}\sqrt{\frac{Pbar}{0.0319Tm}}$$

Limit: 0.97Y <Yc< 1.03Y

Limit: 0.978 <Yc< 1.038

$$\text{Calc. Delta H @} = \frac{0.0319\ (\text{Delta H})(Tm)(100)}{Pbar(Y^2)(Vm^2)}$$ (From Calibration Data) = 1.958

ONTARIO HYDRO METHOD TEST SUPPORT DATA

PROJECT NO.:	93006	**TEST RUN NO.:**	1-Hg	**TEST DATE:**	10/19/99

CUSTOMER:	Alliant Energy, Inc.	**BAROMETRIC PRESSURE (Pb)**	29.36	**in. Hg.**	
PLANT:	Columbia Power Station	**STATIC PRESSURE**	-7.8	**in. H2O**	
TEST LOC.:	Unit 1 Stack (Inlet)	**FLUE PRESSURE (Ps)**	28.79	**in. Hg. abs.**	
CLIENT:	Alliant Energy, Inc.	**PROBE LENGTH:**	14	**ft.**	
OPERATOR:	J. Platt	**PROBE LINER MATERIAL:**	Glass		
CONTROL BOX:	E-15	**NOZZLE IDENTIFICATION NO.:**	#2 Set 2		
METER NO.:	E-15	**CALIBRATED NOZZLE DIAMETER:**	0.236	**in.**	
METER CALIBRATION FACTOR:	1.009	**LEAK CHECK** **PRE:**	0.000	**POST:**	0.000 @ 15 in. Hg.
PITOT ID NO.:	434A	**DUCT SHAPE:**	Circular DIA.		Feet
PITOT TUBE COEFFICIENT:	0.830		Rectangular	13.5 Feet	72 Feet
PORT LENGTH:	48 in.	**DUCT AREA:**	972	**sq. ft.**	
PORT SIZE:	4 in.	**TEST LENGTH:**	120	**min.**	
PORT TYPE:	Nipple	**MINUTES PER POINT:**	6		
		TOTAL NUMBER OF TRAVERSE POINTS:	20		

ONTARIO HYDRO METHOD TRAVERSE DATA

Company: Alliant Energy, Inc. **Date:** 10/19/99 **Test Run.** 1-Hg

Location: Unit 1 Stack (Inlet)

Point	Δp	Sq. Root Δp	Time	Volume cubic fe	ΔH	Stack Temp °F	Meter Inlet °F	Meter Outlet °F	Vacuum in. Hg	
1-1	0.45	0.671	8:45	71.44	0.48	768	47	45	2	2.360
1-2	0.45	0.671	8:51	73.80	0.48	776	48	45	2	2.700
1-3	0.42	0.648	8:57	76.50	0.45	762	51	46	2	1.900
1-4	0.35	0.592	9:03	78.40	0.37	759	52	46	2	1.950
1-5	0.33	0.574	9:09	80.35	0.35	756	53	47	2	2.250
			9:15	82.60						0.000
2-1	0.40	0.632	9:26	83.40	0.42	707	54	49	4	2.080
2-2	0.43	0.656	9:32	85.48	0.46	769	54	50	4	2.220
2-3	0.40	0.632	9:38	87.70	0.42	762	56	50	4	2.300
2-4	0.35	0.592	9:44	90.00	0.37	762	58	51	4	2.200
2-5	0.35	0.592	9:50	92.20	0.37	760	58	52	4	2.100
			9:56	94.30						0.000
3-1	0.40	0.632	9:58	94.80	0.42	762	58	52	5	2.270
3-2	0.40	0.632	10:04	97.07	0.42	767	59	53	5	2.230
3-3	0.47	0.686	10:10	99.30	0.50	767	60	53	5	2.400
3-4	0.52	0.721	10:16	101.70	0.55	767	60	53	5	2.400
3-5	0.35	0.592	10:22	104.10	0.37	762	59	54	5	2.100
			10:28	106.20						0.000
4-1	0.45	0.671	10:30	106.40	0.48	769	58	53	5	2.200
4-2	0.50	0.707	10:36	108.60	0.53	772	59	54	5	2.500
4-3	0.35	0.592	10:42	111.10	0.37	771	60	54	5	2.200
4-4	0.30	0.548	10:48	113.30	0.32	767	60	54	6	2.000
4-5	0.30	0.548	10:54	115.30	0.32	769	60	54	6	1.950
			11:00	117.25						0.000
										0.000
										0.000
										0.000
										0.000
										0.000
										0.000
										0.000
										0.000
										0.000
										0.000
										0.000
										0.000
										0.000
										0.000
		0.629		44.310	0.42	763	56	51		#####
							53.48			

MOISTURE, DILUENT AND MERCURY DATA

Company Alliant Energy, Inc. **Date:** 10/19/99 **Test Run:** 1-Hg

Location: Unit 1 Stack (Inlet)

SILICA GEL FINAL WT.:	804.10	**grams**
SILICA GEL INITIAL WT.:	791.20	**grams**
DIFFERENCE:	12.90	
FINAL IMPINGER WATER:	4979.60	**mls.**
INITIAL IMPINGER WATER:	4843.10	**mls.**
DIFFERENCE:	136.50	
TOTAL WATER GAIN:	149.40	

ITEM	MERCURY (UG)		= NET WT. (G)
FILTER: 4	0.006		0.000000006
PROBE WASH:	0.002		0.000000002
		Particle-bound Total:	0.000000008
KCl:	1.140		0.000001140
		Oxidized Total:	0.000001140
HNO_3/H_2O_2:	1.382		0.000001382
$KMNO_4$:	16.064		0.000016064
		Elemental Total:	0.000017446

Orsat Analysis	1	2	3	Average
Carbon Dioxide:	15.20	15.20	15.20	15.20
Oxygen:	3.80	3.80	3.80	3.80

ONTARIO HYDRO METHOD DATA ENTRY FORM

Field Data/Calculated Data

Company:	**Alliant Energy, Inc.**
Date:	10/19/99
Test Run:	1-Hg
Stack or Duct No.:	Unit 1 Stack (Inlet)
Start Time:	8:45
Stop Time:	11:00

Pb:	29.36	Inches Hg
Static	-7.80	Inches H2O
Ps:	28.79	Inches Hg Abs.
Vlc:	149	ml + grams
Mn:	0.0000	gm
Test Time:	120	minutes
% O2:	3.80	%
% CO2:	15.20	%
% N2:	81.00	%
Delta H:	0.42	Inches H20
Cp:	0.830	Dimensionless - pitot
Tm:	53.48	°F
Sqrt P:	0.629	Inches H20
Ts:	762.70	°F
Vm:	44.310	Cubic Feet
Dn:	0.236	Inches - nozzle
As:	972.00	Sq. Feet
Yd:	1.009	Mcf
CF:	N/A	Process tons/hr
Heat Input:	N/A	MM BTU/hr
Fd:	N/A	dscf/10^6 Btu
Fc:	N/A	scf/10^6 Btu

Vmstd:	45.161	cubic feet (dry)
Vwstd:	7.037	cubic feet (wet)
Bwo:	0.135	
Md:	30.584	lb/lb-mole (dry)
Ms:	28.888	lb/lb-mole (wet)
Excess Air (%)	21.611	
Vs:	54.153	fps
ACFM:	3158217.	
DSCFM:	1135253.	
WSCFM:	1312144	
%I:	106.1	isokinetic variance
GR/ACF:	---	
GR/DSCF:	---	
lbs/hr	---	
lbs/ton prod.:	N/A	
lbs/MM BTU:	N/A	Heat Input
lbs/MM BTU:	N/A	O2 Basis
lbs/MM BTU:	N/A	CO2 Basis

ONTARIO HYDRO METHOD TEST SUPPORT DATA

PROJECT NO.:	93006	**TEST RUN NO.:**	2-Hg	**TEST DATE:**	10/19/99

CUSTOMER:	Alliant Energy, Inc.	**BAROMETRIC PRESSURE (Pb)**	29.36	**in. Hg.**	
PLANT:	Columbia Power Station	**STATIC PRESSURE**	-7.8	**in. H2O**	
TEST LOC.:	Unit 1 Stack (Inlet)	**FLUE PRESSURE (Ps)**	28.79	**in. Hg. abs.**	
CLIENT:	Alliant Energy, Inc.	**PROBE LENGTH:**	14	**ft.**	
OPERATOR:	J. Platt	**PROBE LINER MATERIAL:**	Glass		
CONTROL BOX:	E-15	**NOZZLE IDENTIFICATION NO.:**	#2 Set 2		
METER NO.:	E-15	**CALIBRATED NOZZLE DIAMETER:**	0.236	**in.**	
METER CALIBRATION FACTOR:	1.009	**LEAK CHECK** **PRE:**	0.000	**POST:**	0.000 @ 16 in. Hg.
PITOT ID NO.:	434A	**DUCT SHAPE:**	Circular DIA.		Feet
			Rectangular	13.5 Feet	72 Feet
PITOT TUBE COEFFICIENT:	0.830	**DUCT AREA:**	972	**sq. ft.**	
PORT LENGTH:	48 in.	**TEST LENGTH:**	120	**min.**	
PORT SIZE:	4 in.	**MINUTES PER POINT:**	6		
PORT TYPE:	Nipple	**TOTAL NUMBER OF TRAVERSE POINTS:**	20		

ONTARIO HYDRO METHOD TRAVERSE DATA

Company: Alliant Energy, Inc. **Date:** 10/19/99 **Test Run.** 2-Hg

Location: Unit 1 Stack (Inlet)

Point	Δp	Sq. Root Δp	Time	Volume cubic fe	ΔH	Stack Temp °F	Meter Inlet °F	Meter Outlet °F	Vacuum in. Hg	
1-1	0.43	0.656	12:15	18.83	0.46	765	65	61	3	2.370
1-2	0.43	0.656	12:21	21.20	0.46	761	66	61	3	2.250
1-3	0.40	0.632	12:27	23.45	0.43	766	66	61	3	2.200
1-4	0.35	0.592	12:33	25.65	0.38	764	67	62	3	2.050
1-5	0.35	0.592	12:39	27.70	0.38	759	68	62	3	2.050
			12:45	29.75						0.000
2-1	0.42	0.648	12:53	31.70	0.45	752	67	62	5	2.330
2-2	0.40	0.632	12:59	34.03	0.43	757	68	63	5	2.190
2-3	0.40	0.632	13:05	36.22	0.43	758	69	63	5	2.180
2-4	0.36	0.600	13:11	38.40	0.39	754	68	63	5	2.050
2-5	0.36	0.600	13:16	40.45	0.39	753	69	63	5	2.150
			13:23	42.60						0.000
3-1	0.40	0.632	13:25	42.92	0.43	749	69	63	5.5	2.180
3-2	0.40	0.632	13:31	45.10	0.43	754	70	64	5.5	2.280
3-3	0.45	0.671	13:37	47.38	0.49	757	70	64	5.5	2.320
3-4	0.53	0.728	13:43	49.70	0.57	758	70	64	5.5	2.500
3-5	0.48	0.693	13:49	52.20	0.52	760	70	64	5.5	2.600
			13:55	54.80						0.000
4-1	0.40	0.632	13:57	55.00	0.43	761	68	63	6	2.200
4-2	0.40	0.632	14:03	57.20	0.43	759	68	64	6	2.300
4-3	0.50	0.707	14:09	59.50	0.54	759	69	63	6	2.400
4-4	0.50	0.707	14:15	61.90	0.54	754	68	63	6	2.420
4-5	0.30	0.548	14:21	64.32	0.32	755	68	63	6	1.950
			14:27	66.27						0.000
										0.000
										0.000
										0.000
										0.000
										0.000
										0.000
										0.000
										0.000
										0.000
										0.000
										0.000
										0.000
										0.000
										0.000
		0.641		44.970	0.45	758	68	63		#####
							65.48			

MOISTURE, DILUENT AND MERCURY DATA

Company Alliant Energy, Inc. **Date:** 10/19/99 **Test Run:** 2-Hg

Location: Unit 1 Stack (Inlet)

SILICA GEL FINAL WT.:	724.30	**grams**
SILICA GEL INITIAL WT.:	712.80	**grams**
DIFFERENCE:	11.50	
FINAL IMPINGER WATER:	4793.10	**mls.**
INITIAL IMPINGER WATER:	4651.00	**mls.**
DIFFERENCE:	142.10	
TOTAL WATER GAIN:	153.60	

ITEM	MERCURY (UG)		= NET WT. (G)
FILTER: 5	0.006		0.000000006
PROBE WASH:	0.002		0.000000002
		Particle-bound Total:	0.000000008
KCl:	6.970		0.000006970
		Oxidized Total:	0.000006970
HNO_3/H_2O_2:	0.890		0.000000890
$KMNO_4$:	15.164		0.000015164
		Elemental Total:	0.000016054

Orsat Analysis	1	2	3	Average
Carbon Dioxide:	15.30	15.30	15.30	15.30
Oxygen:	4.00	4.00	4.00	4.00

ONTARIO HYDRO METHOD DATA ENTRY FORM

Field Data/Calculated Data

Company:	**Alliant Energy, Inc.**
Date:	10/19/99
Test Run:	2-Hg
Stack or Duct No.:	Unit 1 Stack (Inlet)
Start Time:	12:15
Stop Time:	14:27

Pb:	29.36	Inches Hg
Static	-7.80	Inches H2O
Ps:	28.79	Inches Hg Abs.
Vlc:	154	ml + grams
Mn:	0.0000	gm
Test Time:	120	minutes
% O2:	4.00	%
% CO2:	15.30	%
% N2:	80.70	%
Delta H:	0.45	Inches H20
Cp:	0.830	Dimensionless - pitot
Tm:	65.48	°F
Sqrt P:	0.641	Inches H20
Ts:	757.75	°F
Vm:	44.970	Cubic Feet
Dn:	0.236	Inches - nozzle
As:	972.00	Sq. Feet
Yd:	1.009	Mcf
CF:	N/A	Process tons/hr
Heat Input:	N/A	MM BTU/hr
Fd:	N/A	dscf/10^6 Btu
Fc:	N/A	scf/10^6 Btu

Vmstd:	44.789	cubic feet (dry)
Vwstd:	7.235	cubic feet (wet)
Bwo:	0.139	
Md:	30.608	lb/lb-mole (dry)
Ms:	28.855	lb/lb-mole (wet)
Excess Air (%)	23.115	
Vs:	55.087	fps
ACFM:	3212669.	
DSCFM:	1153821.	
WSCFM:	1340192	
%I:	103.6	isokinetic variance
GR/ACF:	---	
GR/DSCF:	---	
lbs/hr	---	
lbs/ton prod.:	N/A	
lbs/MM BTU:	N/A	Heat Input
lbs/MM BTU:	N/A	O2 Basis
lbs/MM BTU:	N/A	CO2 Basis

ONTARIO HYDRO METHOD TEST SUPPORT DATA

PROJECT NO.:	93006	**TEST RUN NO.:**	3-Hg	**TEST DATE:**	10/19/99

CUSTOMER:	Alliant Energy, Inc.	**BAROMETRIC PRESSURE (Pb)**	29.36	**in. Hg.**	
PLANT:	Columbia Power Station	**STATIC PRESSURE**	-7.8	**in. H2O**	
TEST LOC.:	Unit 1 Stack (Inlet)	**FLUE PRESSURE (Ps)**	28.79	**in. Hg. abs.**	
CLIENT:	Alliant Energy, Inc.	**PROBE LENGTH:**	14	**ft.**	
OPERATOR:	J. Platt	**PROBE LINER MATERIAL:**	Glass		
CONTROL BOX:	E-15	**NOZZLE IDENTIFICATION NO.:**	#2 Set 2		
METER NO.:	E-15	**CALIBRATED NOZZLE DIAMETER:**	0.236	**in.**	
METER CALIBRATION FACTOR:	1.009	**LEAK CHECK** **PRE:**	0.000	**POST:**	0.000 @ 18 in. Hg.
PITOT ID NO.:	434A	**DUCT SHAPE:**	Circular DIA.		Feet
			Rectangular	13.5 Feet	72 Feet
PITOT TUBE COEFFICIENT:	0.830	**DUCT AREA:**	972	**sq. ft.**	
PORT LENGTH:	48 in.	**TEST LENGTH:**	120	**min.**	
PORT SIZE:	4 in.	**MINUTES PER POINT:**	6		
PORT TYPE:	Nipple	**TOTAL NUMBER OF TRAVERSE POINTS:**	20		

ONTARIO HYDRO METHOD TRAVERSE DATA

Company: Alliant Energy, Inc. **Date:** 10/19/99 **Test Run.** 3-Hg

Location: Unit 1 Stack (Inlet)

Point	Δp	Sq. Root Δp	Time	Volume cubic fe	ΔH	Stack Temp °F	Meter Inlet °F	Meter Outlet °F	Vacuum in. Hg	
1-1	0.40	0.632	15:30	67.00	0.43	764	59	57	4	2.220
1-2	0.40	0.632	15:36	69.22	0.43	767	69	57	4	2.280
1-3	0.43	0.656	15:42	71.50	0.46	767	61	57	4	2.300
1-4	0.34	0.583	15:48	73.80	0.37	763	61	57	4	2.050
1-5	0.34	0.583	15:54	75.85	0.37	766	62	57	4	2.050
			16:00	77.90						0.000
2-1	0.40	0.632	16:02	78.26	0.43	767	63	58	5	2.280
2-2	0.40	0.632	16:08	80.54	0.43	766	64	58	5	2.160
2-3	0.36	0.600	16:14	82.70	0.39	768	65	59	5	2.070
2-4	0.32	0.566	16:20	84.77	0.35	765	65	59	5	1.980
2-5	0.32	0.566	16:26	86.75	0.35	761	63	59	5	1.970
			16:32	88.72						0.000
3-1	0.40	0.632	16:34	89.18	0.43	763	61	58	5.5	2.270
3-2	0.42	0.648	16:40	91.45	0.45	768	61	57	5.5	1.750
3-3	0.45	0.671	16:46	93.20	0.49	769	61	57	5.5	2.800
3-4	0.52	0.721	16:52	96.00	0.56	773	62	57	5.5	2.500
3-5	0.50	0.707	16:58	98.50	0.54	772	62	57	5.5	2.600
			17:04	101.10						0.000
4-1	0.42	0.648	17:06	101.35	0.45	773	61	56	5.5	2.250
4-2	0.40	0.632	17:12	103.60	0.43	771	60	56	5.5	2.150
4-3	0.45	0.671	17:18	105.75	0.49	774	60	56	5.5	2.350
4-4	0.50	0.707	17:24	108.10	0.54	775	61	56	5.5	2.400
4-5	0.35	0.592	17:30	110.50	0.38	771	60	56	5.5	2.150
			17:36	112.65						0.000
										0.000
										0.000
										0.000
										0.000
										0.000
										0.000
										0.000
										0.000
										0.000
										0.000
										0.000
										0.000
										0.000
										0.000
		0.636		44.580	0.44	768	62	57		######
							59.63			

MOISTURE, DILUENT AND MERCURY DATA

Company Alliant Energy, Inc. **Date:** 10/19/99 **Test Run:** 3-Hg

Location: Unit 1 Stack (Inlet)

SILICA GEL FINAL WT.:	805.00	**grams**
SILICA GEL INITIAL WT.:	795.60	**grams**
DIFFERENCE:	9.40	
FINAL IMPINGER WATER:	4992.80	**mls.**
INITIAL IMPINGER WATER:	4874.10	**mls.**
DIFFERENCE:	118.70	
TOTAL WATER GAIN:	128.10	

ITEM		MERCURY (UG)		= NET WT. (G)
FILTER:	14	0.009		0.000000009
PROBE WASH:		0.005		0.000000005
			Particle-bound Total:	0.000000014
KCl:		0.550		0.000000550
			Oxidized Total:	0.000000550
HNO_3/H_2O_2:		0.716		0.000000716
$KMNO_4$:		16.664		0.000016664
			Elemental Total:	0.000017380

Orsat Analysis	1	2	3	Average
Carbon Dioxide:	15.00	15.00	15.00	15.00
Oxygen:	4.20	4.20	4.20	4.20

ONTARIO HYDRO METHOD DATA ENTRY FORM

Field Data/Calculated Data

Company:	**Alliant Energy, Inc.**
Date:	10/19/99
Test Run:	3-Hg
Stack or Duct No.:	Unit 1 Stack (Inlet)
Start Time:	15:30
Stop Time:	17:36

Pb:	**29.36**	**Inches Hg**
Static	**-7.80**	**Inches H2O**
Ps:	**28.79**	**Inches Hg Abs.**
Vlc:	**128**	**ml + grams**
Mn:	**0.0000**	**gm**
Test Time:	**120**	**minutes**
% O2:	**4.20**	**%**
% CO2:	**15.00**	**%**
% N2:	**80.80**	**%**
Delta H:	**0.44**	**Inches H20**
Cp:	**0.830**	**Dimensionless - pitot**
Tm:	**59.63**	**°F**
Sqrt P:	**0.636**	**Inches H20**
Ts:	**768.15**	**°F**
Vm:	**44.580**	**Cubic Feet**
Dn:	**0.236**	**Inches - nozzle**
As:	**972.00**	**Sq. Feet**
Yd:	**1.009**	**Mcf**
CF:	**N/A**	**Process tons/hr**
Heat Input:	**N/A**	**MM BTU/hr**
Fd:	**N/A**	**dscf/10^6 Btu**
Fc:	**N/A**	**scf/10^6 Btu**

Vmstd:	**44.900**	**cubic feet (dry)**
Vwstd:	**6.034**	**cubic feet (wet)**
Bwo:	**0.118**	
Md:	**30.568**	**lb/lb-mole (dry)**
Ms:	**29.079**	**lb/lb-mole (wet)**
Excess Air (%)	**24.517**	
Vs:	**54.632**	**fps**
ACFM:	**3186111.**	
DSCFM:	**1161747.**	
WSCFM:	**1317859**	
%I:	**103.1**	**isokinetic variance**
GR/ACF:	**---**	
GR/DSCF:	**---**	
lbs/hr	**---**	
lbs/ton prod.:	**N/A**	
lbs/MM BTU:	**N/A**	**Heat Input**
lbs/MM BTU:	**N/A**	**O2 Basis**
lbs/MM BTU:	**N/A**	**CO2 Basis**

ONTARIO HYDRO METHOD TEST SUPPORT DATA

PROJECT NO.:	93006	**TEST RUN NO.:**	1-Hg	**TEST DATE:**	10/19/99

CUSTOMER:	Alliant Energy, Inc.		
PLANT:	Columbia Power Station		
TEST LOC.:	Unit 1 Stack (Outlet)		
CLIENT:	Alliant Energy, Inc.		
OPERATOR:	J. Geiger		
CONTROL BOX:	E-25		
METER NO.:	E-25		
METER CALIBRATION FACTOR:	1.008		
PITOT ID NO.:	541A		
PITOT TUBE COEFFICIENT:	0.837		
PORT LENGTH:	7	in.	
PORT SIZE:	4	in.	
PORT TYPE:	Flange		

BAROMETRIC PRESSURE (Pb)	29.36	**in. Hg.**	
STATIC PRESSURE	-2.4	**in. H2O**	
FLUE PRESSURE (Ps)	29.18	**in. Hg. abs.**	
PROBE LENGTH:	8.5	**ft.**	
PROBE LINER MATERIAL:	Glass		
NOZZLE IDENTIFICATION NO.:	N/A		
CALIBRATED NOZZLE DIAMETER:	0.180	**in.**	
LEAK CHECK **PRE:**	0.008	**POST:**	0.005 @ 6 in. Hg.
DUCT SHAPE: Circular / Rectangular	DIA.	21 Feet	
		Feet	Feet
DUCT AREA:	346.3603	**sq. ft.**	
TEST LENGTH:	120	**min.**	
MINUTES PER POINT:	5		
TOTAL NUMBER OF TRAVERSE POINTS:	24		

ONTARIO HYDRO METHOD TRAVERSE DATA

Company: Alliant Energy, Inc. **Date:** 10/19/99 **Test Run.** 1-Hg

Location: Unit 1 Stack (Outlet)

Point	Δp	Sq. Root Δp	Time	Volume cubic fe	ΔH	Stack Temp °F	Meter Inlet °F	Meter Outlet °F	Vacuum in. Hg	
1-1	2.20	1.483	8:45	880.12	1.43	31	75	76	5	3.360
1-2	2.30	1.517	8:50	883.48	1.50	311	76	75	5	3.451
1-3	2.20	1.483	8:55	886.93	1.43	308	76	75	5	3.327
1-4	2.40	1.549	9:00	890.26	1.56	310	78	74	5	3.492
1-5	2.40	1.549	9:05	893.75	1.56	310	79	75	5	3.502
1-6	2.10	1.449	9:10	897.25	1.36	308	79	75	4	3.278
			9:15	900.53						0.000
2-1	2.40	1.549	9:18	900.53	1.56	311	81	79	5	3.600
2-2	2.40	1.549	9:23	904.13	1.56	314	81	78	5	3.094
2-3	2.60	1.612	9:28	907.23	1.70	314	81	79	5	4.007
2-4	2.50	1.581	9:33	911.23	1.63	309	81	79	5	3.627
2-5	2.30	1.517	9:38	914.86	1.50	315	81	78	5	3.336
2-6	2.20	1.483	9:43	918.20	1.43	313	81	78	5	3.325
			9:48	921.52						0.000
3-1	2.30	1.517	9:51	921.52	1.49	309	80	77	5	3.449
3-2	2.40	1.549	9:56	924.97	1.56	311	82	77	5	3.522
3-3	2.30	1.517	10:01	928.49	1.49	310	82	77	5	3.440
3-4	2.50	1.581	10:06	931.93	1.63	310	82	77	5	3.740
3-5	2.70	1.643	10:11	935.67	1.76	310	82	76	6	3.560
3-6	2.20	1.483	10:16	939.23	1.43	311	84	78	5	3.298
			10:21	942.53						0.000
4-1	2.00	1.414	10:24	942.53	1.30	311	82	78	5	3.204
4-2	2.30	1.517	10:29	945.73	1.49	312	82	77	5	3.426
4-3	2.30	1.517	10:34	949.16	1.49	312	83	79	5	3.420
4-4	2.60	1.612	10:39	952.58	1.69	312	84	79	5	3.658
4-5	2.20	1.483	10:44	956.24	1.43	312	84	79	5	3.344
4-6	1.90	1.378	10:49	959.58	1.23	311	84	79	4	3.120
			10:54	962.70						0.000
										0.000
										0.000
										0.000
										0.000
										0.000
										0.000
										0.000
										0.000
										0.000
										0.000
		1.522		82.580	1.51	299	81	77		#####
							79.04			

MOISTURE, DILUENT AND MERCURY DATA

Company Alliant Energy, Inc. **Date:** 10/19/99 **Test Run:** 1-Hg

Location: Unit 1 Stack (Outlet)

SILICA GEL FINAL WT.:	760.30	**grams**
SILICA GEL INITIAL WT.:	739.80	**grams**
DIFFERENCE:	20.50	
FINAL IMPINGER WATER:	4913.10	**mls.**
INITIAL IMPINGER WATER:	4707.60	**mls.**
DIFFERENCE:	205.50	
TOTAL WATER GAIN:	226.00	

ITEM	MERCURY (UG)		= NET WT. (G)
FILTER:	0.006		0.000000006
PROBE WASH:	0.000		0.000000000
		Particle-bound Total:	0.000000006
KCl:	5.190		0.000005190
		Oxidized Total:	0.000005190
HNO_3/H_2O_2:	1.632		0.000001632
$KMNO_4$:	20.564		0.000020564
		Elemental Total:	0.000022196

Orsat Analysis	1	2	3	Average
Carbon Dioxide:	12.70	12.50	12.20	12.47
Oxygen:	6.10	6.00	5.80	5.97

ONTARIO HYDRO METHOD DATA ENTRY FORM

Field Data/Calculated Data

Company:	**Alliant Energy, Inc.**
Date:	10/19/99
Test Run:	1-Hg
Stack or Duct No.:	Unit 1 Stack (Outlet)
Start Time:	8:45
Stop Time:	10:54

Pb:	**29.36**	**Inches Hg**
Static	**-2.40**	**Inches H2O**
Ps:	**29.18**	**Inches Hg Abs.**
Vlc:	**226**	**ml + grams**
Mn:	**0.0000**	**gm**
Test Time:	**120**	**minutes**
% O2:	**5.97**	**%**
% CO2:	**12.47**	**%**
% N2:	**81.57**	**%**
Delta H:	**1.51**	**Inches H20**
Cp:	**0.837**	**Dimensionless - pitot**
Tm:	**79.04**	**°F**
Sqrt P:	**1.522**	**Inches H20**
Ts:	**299.38**	**°F**
Vm:	**82.580**	**Cubic Feet**
Dn:	**0.180**	**Inches - nozzle**
As:	**346.36**	**Sq. Feet**
Yd:	**1.008**	**Mcf**
CF:	**N/A**	**Process tons/hr**
Heat Input:	**N/A**	**MM BTU/hr**
Fd:	**N/A**	**dscf/10^6 Btu**
Fc:	**N/A**	**scf/10^6 Btu**

Vmstd:	**80.312**	**cubic feet (dry)**
Vwstd:	**10.645**	**cubic feet (wet)**
Bwo:	**0.117**	
Md:	**30.233**	**lb/lb-mole (dry)**
Ms:	**28.802**	**lb/lb-mole (wet)**
Excess Air (%)	**38.329**	
Vs:	**103.532**	**fps**
ACFM:	**2151559.**	
DSCFM:	**1288402.**	
WSCFM:	**1459169**	
%I:	**101.9**	**isokinetic variance**
GR/ACF:	**---**	
GR/DSCF:	**---**	
lbs/hr	**---**	
lbs/ton prod.:	**N/A**	
lbs/MM BTU:	**N/A**	**Heat Input**
lbs/MM BTU:	**N/A**	**O2 Basis**
lbs/MM BTU:	**N/A**	**CO2 Basis**

ONTARIO HYDRO METHOD TEST SUPPORT DATA

PROJECT NO.:	93006	**TEST RUN NO.:**	2-Hg	**TEST DATE:**	10/19/99

CUSTOMER:	Alliant Energy, Inc.		
PLANT:	Columbia Power Station		
TEST LOC.:	Unit 1 Stack (Outlet)		
CLIENT:	Alliant Energy, Inc.		
OPERATOR:	J. Geiger		
CONTROL BOX:	E-25		
METER NO.:	E-25		
METER CALIBRATION FACTOR:	1.008		
PITOT ID NO.:	541A		
PITOT TUBE COEFFICIENT:	0.837		
PORT LENGTH:	7	in.	
PORT SIZE:	4	in.	
PORT TYPE:	Flange		

BAROMETRIC PRESSURE (Pb)	29.36	**in. Hg.**			
STATIC PRESSURE	-2.4	**in. H2O**			
FLUE PRESSURE (Ps)	29.18	**in. Hg. abs.**			
PROBE LENGTH:	8.5	**ft.**			
PROBE LINER MATERIAL:	Glass				
NOZZLE IDENTIFICATION NO.:	N/A				
CALIBRATED NOZZLE DIAMETER:	0.180	**in.**			
LEAK CHECK	**PRE:** 0.004	**POST:**	0.003	@ 8 in. Hg.	
DUCT SHAPE:	Circular DIA.	21 Feet			
	Rectangular	Feet		Feet	
DUCT AREA:	346.3603	**sq. ft.**			
TEST LENGTH:	120	**min.**			
MINUTES PER POINT:	5				
TOTAL NUMBER OF TRAVERSE POINTS:	24				

ONTARIO HYDRO METHOD TRAVERSE DATA

Company: Alliant Energy, Inc. **Date:** 10/19/99 **Test Run.** 2-Hg

Location: Unit 1 Stack (Outlet)

Point	Δp	Sq. Root Δp	Time	Volume cubic fe	ΔH	Stack Temp °F	Meter Inlet °F	Meter Outlet °F	Vacuum in. Hg	
1-1	2.30	1.517	12:15	966.14	1.49	313	76	75	7	3.438
1-2	2.30	1.517	12:20	969.57	1.49	312	76	74	6	3.415
1-3	2.50	1.581	12:25	972.99	1.63	312	78	75	6	3.588
1-4	2.40	1.549	12:30	976.58	1.56	313	77	75	7	3.556
1-5	2.10	1.449	12:35	980.13	1.36	313	78	75	6	3.282
1-6	2.10	1.449	12:40	983.42	1.36	310	78	75	6	3.220
			12:45	986.64						0.000
2-1	2.40	1.549	12:48	986.64	1.56	312	80	77	7	3.505
2-2	2.60	1.612	12:53	990.14	1.69	310	81	79	7	3.651
2-3	2.50	1.581	12:58	993.79	1.63	312	82	79	7	3.560
2-4	2.50	1.581	13:03	997.35	1.63	313	82	79	7	3.580
2-5	2.40	1.549	13:08	1000.93	1.56	313	81	79	6	3.510
2-6	2.10	1.449	13:13	1004.44	1.36	312	83	79	6	3.294
			13:18	1007.74						0.000
3-1	2.20	1.483	13:20	1007.74	1.43	311	83	79	5	3.409
3-2	2.50	1.581	13:25	1011.14	1.63	314	82	80	6	3.441
3-3	2.30	1.517	13:30	1014.59	1.49	314	82	79	5	3.570
3-4	2.60	1.612	13:35	1018.16	1.69	313	81	79	7	3.672
3-5	2.30	1.517	13:40	1021.83	1.49	313	84	80	6	3.275
3-6	2.10	1.449	13:45	1025.10	1.37	311	83	81	5	3.347
			13:50	1028.45						0.000
4-1	2.30	1.517	13:53	1028.45	1.49	314	82	78	6	3.442
4-2	2.30	1.517	13:58	1031.89	1.49	313	84	79	6	3.540
4-3	2.00	1.414	14:03	1035.43	1.30	314	83	80	5	2.991
4-4	2.40	1.549	14:08	1038.42	1.56	313	84	81	7	3.713
4-5	2.10	1.449	14:13	1042.14	1.36	313	83	80	6	3.168
4-6	2.10	1.449	14:18	1045.30	1.36	313	82	80	6	3.260
			14:23	1048.56						0.000
										0.000
										0.000
										0.000
										0.000
										0.000
										0.000
										0.000
										0.000
										0.000
										0.000
		1.518		82.427	1.50	313	81	78		######
							79.63			

MOISTURE, DILUENT AND MERCURY DATA

Company Alliant Energy, Inc. **Date:** 10/19/99 **Test Run:** 2-Hg

Location: Unit 1 Stack (Outlet)

SILICA GEL FINAL WT.:	729.90	**grams**
SILICA GEL INITIAL WT.:	709.50	**grams**
DIFFERENCE:	20.40	
FINAL IMPINGER WATER:	4932.00	**mls.**
INITIAL IMPINGER WATER:	4723.80	**mls.**
DIFFERENCE:	208.20	
TOTAL WATER GAIN:	228.60	

ITEM	MERCURY (UG)		= NET WT. (G)
FILTER:	0.006		0.000000006
PROBE WASH:	0.000		0.000000000
		Particle-bound Total:	0.000000006
KCl:	4.120		0.000004120
		Oxidized Total:	0.000004120
HNO_3/H_2O_2:	1.962		0.000001962
$KMNO_4$:	20.664		0.000020664
		Elemental Total:	0.000022626

Orsat Analysis	1	2	3	Average
Carbon Dioxide:	13.40	12.60	12.80	12.93
Oxygen:	6.00	5.80	5.50	5.77

ONTARIO HYDRO METHOD DATA ENTRY FORM

Field Data/Calculated Data

Company:	**Alliant Energy, Inc.**
Date:	10/19/99
Test Run:	2-Hg
Stack or Duct No.:	Unit 1 Stack (Outlet)
Start Time:	12:15
Stop Time:	14:23

Pb:	29.36	Inches Hg
Static	-2.40	Inches H2O
Ps:	29.18	Inches Hg Abs.
Vlc:	229	ml + grams
Mn:	0.0000	gm
Test Time:	120	minutes
% O2:	5.77	%
% CO2:	12.93	%
% N2:	81.30	%
Delta H:	1.50	Inches H20
Cp:	0.837	Dimensionless - pitot
Tm:	79.63	°F
Sqrt P:	1.518	Inches H20
Ts:	312.54	°F
Vm:	82.427	Cubic Feet
Dn:	0.180	Inches - nozzle
As:	346.36	Sq. Feet
Yd:	1.008	Mcf
CF:	N/A	Process tons/hr
Heat Input:	N/A	MM BTU/hr
Fd:	N/A	dscf/10^6 Btu
Fc:	N/A	scf/10^6 Btu

Vmstd:	80.074	cubic feet (dry)
Vwstd:	10.767	cubic feet (wet)
Bwo:	0.119	
Md:	30.300	lb/lb-mole (dry)
Ms:	28.842	lb/lb-mole (wet)
Excess Air (%)	36.738	
Vs:	104.079	fps
ACFM:	2162924.	
DSCFM:	1270977.	
WSCFM:	1441877	
%I:	103.0	isokinetic variance
GR/ACF:	---	
GR/DSCF:	---	
lbs/hr	---	
lbs/ton prod.:	N/A	
lbs/MM BTU:	N/A	Heat Input
lbs/MM BTU:	N/A	O2 Basis
lbs/MM BTU:	N/A	CO2 Basis

ONTARIO HYDRO METHOD TEST SUPPORT DATA

PROJECT NO.:	93006	**TEST RUN NO.:**	3-Hg	**TEST DATE:**	10/19/99

CUSTOMER:	Alliant Energy, Inc.		
PLANT:	Columbia Power Station		
TEST LOC.:	Unit 1 Stack (Outlet)		
CLIENT:	Alliant Energy, Inc.		
OPERATOR:	J. Geiger		
CONTROL BOX:	E-25		
METER NO.:	E-25		
METER CALIBRATION FACTOR:	1.008		
PITOT ID NO.:	541A		
PITOT TUBE COEFFICIENT:	0.837		
PORT LENGTH:	7	in.	
PORT SIZE:	4	in.	
PORT TYPE:	Flange		

BAROMETRIC PRESSURE (Pb)	29.36	**in. Hg.**			
STATIC PRESSURE	-2.4	**in. H2O**			
FLUE PRESSURE (Ps)	29.18	**in. Hg. abs.**			
PROBE LENGTH:	8.5	**ft.**			
PROBE LINER MATERIAL:	Glass				
NOZZLE IDENTIFICATION NO.:	N/A				
CALIBRATED NOZZLE DIAMETER:	0.180	**in.**			
LEAK CHECK	**PRE:** 0.007	**POST:**	0.004	@ 8 in. Hg.	
DUCT SHAPE:	Circular DIA.	21	Feet		
	Rectangular	Feet		Feet	
DUCT AREA:	346.3603	**sq. ft.**			
TEST LENGTH:	120	**min.**			
MINUTES PER POINT:	5				
TOTAL NUMBER OF TRAVERSE POINTS:	24				

ONTARIO HYDRO METHOD TRAVERSE DATA

Company: Alliant Energy, Inc. **Date:** 10/19/99 **Test Run.** 3-Hg

Location: Unit 1 Stack (Outlet)

Point	Δp	Sq. Root Δp	Time	Volume cubic fe	ΔH	Stack Temp °F	Meter Inlet °F	Meter Outlet °F	Vacuum in. Hg	
1-1	2.10	1.449	15:30	48.84	1.36	313	80	75	5	3.391
1-2	2.30	1.517	15:35	52.23	1.49	314	81	75	5	3.263
1-3	2.30	1.517	15:40	55.50	1.49	313	81	77	5	3.494
1-4	2.50	1.581	15:45	58.99	1.63	313	82	77	5	3.550
1-5	2.20	1.483	15:50	62.54	1.43	313	82	76	5	3.453
1-6	2.20	1.483	15:55	65.99	1.43	314	82	75	5	3.264
			16:00	69.26						0.000
2-1	2.40	1.549	16:03	69.26	1.56	315	82	76	6	3.503
2-2	2.40	1.549	16:08	72.76	1.56	314	82	75	6	3.594
2-3	2.50	1.581	16:13	76.36	1.63	314	81	77	7	3.485
2-4	2.30	1.517	16:18	79.84	1.50	314	82	78	6	3.421
2-5	2.40	1.549	16:23	83.26	1.56	313	83	78	6	3.440
2-6	2.10	1.449	16:28	86.70	1.36	314	82	79	5	3.307
			16:33	90.01						0.000
3-1	2.20	1.483	16:36	90.01	1.43	314	83	78	5	3.407
3-2	2.50	1.581	16:41	93.42	1.63	314	82	79	6	3.462
3-3	2.60	1.612	16:46	96.88	1.69	314	85	78	7	3.706
3-4	2.50	1.581	16:51	100.58	1.63	314	84	78	6	3.648
3-5	2.10	1.449	16:56	104.23	1.36	314	83	77	5	3.213
3-6	2.00	1.414	17:01	107.44	1.30	314	83	78	5	3.171
			17:06	110.62						0.000
4-1	2.20	1.483	17:09	110.62	1.43	314	81	78	5	3.360
4-2	2.20	1.483	17:14	113.98	1.43	314	82	79	5	3.418
4-3	2.60	1.612	17:19	117.39	1.69	314	83	79	7	3.406
4-4	2.50	1.581	17:24	120.80	1.63	315	83	80	7	3.775
4-5	2.30	1.517	17:29	124.57	1.49	315	83	81	6	3.376
4-6	2.00	1.414	17:34	127.95	1.30	315	84	81	5	3.204
			17:39	131.15						0.000
										0.000
										0.000
										0.000
										0.000
										0.000
										0.000
										0.000
										0.000
										0.000
										0.000
		1.518		82.311	1.50	314	82	78		#####
							80.00			

MOISTURE, DILUENT AND MERCURY DATA

Company Alliant Energy, Inc. **Date:** 10/19/99 **Test Run:** 3-Hg

Location: Unit 1 Stack (Outlet)

SILICA GEL FINAL WT.:	780.70	**grams**
SILICA GEL INITIAL WT.:	759.00	**grams**
DIFFERENCE:	21.70	
FINAL IMPINGER WATER:	4933.10	**mls.**
INITIAL IMPINGER WATER:	4726.10	**mls.**
DIFFERENCE:	207.00	
TOTAL WATER GAIN:	228.70	

ITEM	MERCURY (UG)		= NET WT. (G)
FILTER:	0.006		0.000000006
PROBE WASH:	0.000		0.000000000
		Particle-bound Total:	0.000000006
KCl:	5.010		0.000005010
		Oxidized Total:	0.000005010
HNO_3/H_2O_2:	1.962		0.000001962
$KMNO_4$:	21.964		0.000021964
		Elemental Total:	0.000023926

Orsat Analysis	1	2	3	Average
Carbon Dioxide:	12.20	12.70	12.50	12.47
Oxygen:	5.90	6.10	6.00	6.00

ONTARIO HYDRO METHOD DATA ENTRY FORM

Field Data/Calculated Data

Company:	**Alliant Energy, Inc.**
Date:	10/19/99
Test Run:	3-Hg
Stack or Duct No.:	Unit 1 Stack (Outlet)
Start Time:	15:30
Stop Time:	17:39

Pb:	**29.36**	**Inches Hg**
Static	**-2.40**	**Inches H2O**
Ps:	**29.18**	**Inches Hg Abs.**
Vlc:	**229**	**ml + grams**
Mn:	**0.0000**	**gm**
Test Time:	**120**	**minutes**
% O2:	**6.00**	**%**
% CO2:	**12.47**	**%**
% N2:	**81.53**	**%**
Delta H:	**1.50**	**Inches H20**
Cp:	**0.837**	**Dimensionless - pitot**
Tm:	**80.00**	**°F**
Sqrt P:	**1.518**	**Inches H20**
Ts:	**313.96**	**°F**
Vm:	**82.311**	**Cubic Feet**
Dn:	**0.180**	**Inches - nozzle**
As:	**346.36**	**Sq. Feet**
Yd:	**1.008**	**Mcf**
CF:	**N/A**	**Process tons/hr**
Heat Input:	**N/A**	**MM BTU/hr**
Fd:	**N/A**	**dscf/10^6 Btu**
Fc:	**N/A**	**scf/10^6 Btu**

Vmstd:	**79.906**	**cubic feet (dry)**
Vwstd:	**10.772**	**cubic feet (wet)**
Bwo:	**0.119**	
Md:	**30.235**	**lb/lb-mole (dry)**
Ms:	**28.781**	**lb/lb-mole (wet)**
Excess Air (%)	**38.648**	
Vs:	**104.280**	**fps**
ACFM:	**2167108.**	
DSCFM:	**1270721.**	
WSCFM:	**1442021**	
%I:	**102.8**	**isokinetic variance**
GR/ACF:	**---**	
GR/DSCF:	**---**	
lbs/hr	**---**	
lbs/ton prod.:	**N/A**	
lbs/MM BTU:	**N/A**	**Heat Input**
lbs/MM BTU:	**N/A**	**O2 Basis**
lbs/MM BTU:	**N/A**	**CO2 Basis**

Project Summary-Samples Received Report

Project	*Client*	*Unit*
93006	ALLIANT - COLUMBIA	PORTAGE, WI

Project	*Sample*	*Sample Point*	*Date Received*	*Analyte Detail*
93006	001	FLTR INLET T1	10/21/1999	Mercury
93006	002	FLTR INLET T2	10/21/1999	Mercury
93006	003	FLTR INLET T3	10/21/1999	Mercury
93006	004	KCL INLET T1	10/21/1999	Mercury
93006	005	KCL INLET T2	10/21/1999	Mercury
93006	006	KCL INLET T3	10/21/1999	Mercury
93006	007	HNO3 INLET T1	10/21/1999	Mercury
93006	008	HNO3 INLET T2	10/21/1999	Mercury
93006	009	HNO3 INLET T3	10/21/1999	Mercury
93006	010	KMNO4 INLET T1	10/21/1999	Mercury
93006	011	KMNO4 INLET T2	10/21/1999	Mercury
93006	012	KMNO4 INLET T3	10/21/1999	Mercury
93006	013	FLTR OUTLET T1	10/21/1999	Mercury
93006	014	FLTR OUTLET T2	10/21/1999	Mercury
93006	015	FLTR OUTLET T3	10/21/1999	Mercury
93006	016	KCL OUTLET T1	10/21/1999	Mercury
93006	017	KCL OUTLET T2	10/21/1999	Mercury
93006	018	KCL OUTLET T3	10/21/1999	Mercury
93006	019	HNO3 OUTLET T1	10/21/1999	Mercury
93006	020	HNO3 OUTLET T2	10/21/1999	Mercury
93006	021	HNO3 OUTLET T3	10/21/1999	Mercury
93006	022	KMNO4 OUTLET T1	10/21/1999	Mercury
93006	023	KMNO4 OUTLET T2	10/21/1999	Mercury
93006	024	KMNO4 OUTLET T3	10/21/1999	Mercury
93006	025	FB KCL INLET	10/21/1999	Mercury
93006	026	FB HNO3 INLET	10/21/1999	Mercury

Project	*Sample*	*Sample Point*	*Date Received*	*Analyte Detail*
93006	027	FB KMNO4 INLET	10/21/1999	Mercury
93006	028	FB KCL OUTLET	10/21/1999	Mercury
93006	029	FB HNO3 OUTLET	10/21/1999	Mercury
93006	030	FB KMNO4 OUTLET	10/21/1999	Mercury
93006	031	BLK THMBL 016	10/21/1999	Mercury
93006	032	BLK THMBL 054	10/21/1999	Mercury
93006	033	BLK THMBL 058	10/21/1999	Mercury
93006	034	RB HNO3	10/21/1999	Mercury
93006	035	RB KCL	10/21/1999	Mercury
93006	036	RB HNO3/H2O2	10/21/1999	Mercury
93006	037	RB KMNO4	10/21/1999	Mercury
93006	038	RB HYDROXYLAMIN	10/21/1999	Mercury
93006	039	COAL T1	10/21/1999	Mercury
93006	039	COAL T1	10/21/1999	Ultimate/Proximate on Coal
93006	039	COAL T1	10/21/1999	Chloride
93006	040	COAL T2	10/21/1999	Chloride
93006	040	COAL T2	10/21/1999	Mercury
93006	040	COAL T2	10/21/1999	Ultimate/Proximate on Coal
93006	041	COAL T3	10/21/1999	Chloride
93006	041	COAL T3	10/21/1999	Mercury
93006	041	COAL T3	10/21/1999	Ultimate/Proximate on Coal
93006	042	ASH T1	10/21/1999	Hold
93006	043	ASH T2	10/21/1999	Hold
93006	044	ASH T3	10/21/1999	Hold

MOSTARDI-PLATT ASSOCIATES, INC.

Environmental Consultants

Read Instructions on Reverse Side Before Completing Form!

CHAIN-OF-CUSTODY RECORD

Project Number: 93006		Date Results Required:	
Client: ALLIANT		TAT(Assessment Only)	
Plant/Location: COLUMBIA - Portage, WI	LAB Use Only	PO Number: 22455, 22545	
Project Supervisor: JRP		LIMS Entry: AHJ 12/6/99	

Sample Number	Date Sampled	Sample Point Identification	# of Conts	Grab/ Comp	Analysis Requested	Sub Lab
001	10/19/99	INLET, TEST 1, FILTER Front ½ + Rinse	2		MERCURY By Cvtavic Hydride Method	
002		TEST 2	2			
003		TEST 3	2			
004		INLET, TEST 1, IMPS 1, 2, 3 (KCl)	2			
005		TEST 2	2			
006		TEST 3	2			
007		INLET, TEST 1, IMP 4 (HNO₃/H₂O₂)	1			
008		TEST 2	1			
009		TEST 3	1			
010		INLET, TEST 1, IMPS 5, 6, 7 (H_2SO_4-KMnO₄)	1			
011		TEST 2	1			
012		TEST 3	1			
013		OUTLET, TEST 1, FILTER Front ½ + Rinse	2			
014		TEST 2	2			
015		TEST 3	2			
016		OUTLET, TEST 1, IMPS 1, 2, 3 (KCl)	2			

Delivered by:	Date/Time	Processed by:	Date/Time	Received by Laboratory:
NS	10.21.99 P.M.	J.W 10.22.99		

Special Instructions:

Read Instructions on Reverse Side Before Completing Form!

CHAIN-OF-CUSTODY RECORD

Project Number: 93006	Date Results Required:
Client:	TAT(Assessment Only)
Plant/Location:	LAB Use Only — PO Number:
Project Supervisor:	LAB Use Only — LIMS Entry:

Sample Number	Date Sampled	Sample Point Identification	# of Conts	Grab/ Comp	Analysis Requested	Sub Lab
017	10/19/99	OUTLET, TEST 2, IMPS 1,2,3 (KCl)	2		MERCURY By Ontario Hydro Method	
018		TEST 3	2			
019		OUTLET, TEST 1, IMP 4 (HNO_3/H_2O_2)	1			
020		TEST 2	1			
021		TEST 3	1			
022		OUTLET, TEST 1, IMPS 5,6,7 (H_2SO_4-$KMnO_4$)	1			
023		TEST 2	1			
024		TEST 3	1			
025		INLET, FIELD BLANK, IMPS 1,2,3 (KCl)	1			
026		IMP 4 (HNO_3/H_2O_2)	1			
027		IMPS 5,6,7 (H_2SO_4-$KMnO_4$)	1			
028		OUTLET, FIELD BLANK, IMPS 1,2,3 (KCl)	1			
029		IMP 4 (HNO_3/H_2O_2)	1			
030		IMPS 5,6,7 (H_2SO_4-$KMnO_4$)	1			
031		BLANK: QUARTZ THIMBLE (#016)	1			
032		(#054)	1			

Delivered by:	Date/Time	Processed by:	Date/Time	Received by Laboratory:

Special Instructions:

MOSTARDI-PLATT ASSOCIATES, INC.
Environmental Consultants

Read Instructions on Reverse Side Before Completing Form!

CHAIN-OF-CUSTODY RECORD

Project Number: 93006	Date Results Required:
Client:	TAT(Assessment Only)
Plant/Location:	LAB Use Only — PO Number:
Project Supervisor:	LAB Use Only — LIMS Entry:

Sample Number	Date Sampled	Sample Point Identification	# of Conts	Grab/ Comp	Analysis Requested	Sub Lab
033	10/19/99	BLANK: QUARTZ THIMBLE (#058)	1		MERCURY By Ontario Hydro Method	
034		BLANKS: 50mL 0.1N HNO_3	1			
035		50mL 1N KCl	1			
036		50mL HNO_3/H_2O_2	1			
037		50mL H_2SO_4-$KMnO_4$	1			
038		100mL 10% Hydroxylamine	1			
039		COAL SAMPLE, TEST 1	1		MERCURY By Ontario Hydro Method,	
040		TEST 2	1		Chlorine, Ult. +	
041		TEST 3	1		Proximate	
042		ASH SAMPLE Test 1			HOLD	
043		Test 2				
044		Test 3				
045						
046						
047						
048						

Delivered by:	Date/Time	Processed by:	Date/Time	Received by Laboratory:

Special Instructions:

LABORATORY REPORT

TEI Analytical, Inc.
7177 N. Austin
Niles, IL 60714-4617
847-647-1345

PREPARED FOR:

Frank Jarke
Mostardi-Platt Associates, Inc.
945 Oaklawn Avenue
Elmhurst, IL 60126

Report #: 37525
Report Date: 1/27/00
Sample Received:
11/8/99 15:37

TEI	93006	Type	Total ug	mg/kg	Date	%RSD	Lin.Reg	Blank	CPI	MS	MSD
37525	001	HNO3	<0.004		1/10/00	2.82	0.99998	NA	97.2	103	103
37526	002	HNO3	<0.004		1/6/00	30.9	0.99959	NA	107	99.5	84.3
37527	003	HNO3	0.005		1/6/00	22.5	0.99959	NA	107	99.5	84.3
37528	004	KCl	1.14		1/3/00	0.313	0.99999	0.491	98.6	93.8	88.6
37529	005	KCl	6.97		1/3/00	0.349	0.99999	0.491	98.6	93.8	88.6
37530	006	KCl	0.55		1/3/00	2.09	0.99999	0.491	98.6	93.8	88.6
37531	007	H2O2	1.40		1/10/00	0.257	0.99998	0.135	93.8	103	103
37532	008	H2O2	0.908		1/10/00	0.66	0.99998	0.135	93.8	103	103
37533	009	H2O2	0.734		1/10/00	0.231	0.99998	0.135	93.8	103	103
37534	010	KMnO4	16.1		12/14/99	0.273	0.99999	<0.03	94.2	108	107
37535	011	KMnO4	15.2		12/14/99	0.421	0.99999	<0.03	94.2	108	107
37536	012	KMnO4	16.7		12/14/99	0.313	0.99999	<0.03	94.2	108	107
37537	013	HNO3	<0.002		1/5/00	1.85	0.99998	NA	98	99.6	101
37538	014	HNO3	<0.003		1/5/00	2.52	0.99998	NA	98	99.6	101
37539	015	HNO3	<0.004		1/5/00	5.16	0.99998	NA	98	99.6	101
37540	016	KCl	5.19		12/28/99	0.197	1	0.282	97	98.5	98.5
37541	017	KCl	4.12		12/28/99	0.396	1	0.282	97	98.5	98.5
37542	018	KCl	5.01		1/3/00	0.115	0.99999	0.491	98.6	93.8	88.6
37543	019	H2O2	1.65		1/10/00	0.306	0.99998	0.135	93.8	103	103
37544	020	H2O2	1.98		1/12/00	0.362	0.99999	0.084	90.7	112	110
37545	021	H2O2	0.655		1/12/00	0.607	0.99999	0.084	90.7	112	110
37546	022	KMnO4	20.6		12/14/99	0.32	0.99999	<0.03	94.2	108	107
37547	023	KMnO4	20.7		12/14/99	0.36	0.99999	<0.03	94.2	108	107
37548	024	KMnO4	22.0		12/14/99	0.119	0.99999	<0.03	94.2	108	107
37549	025	KCl	0.746		12/16/99	0.113	1	<0.03	99	106	108

Gayle E. O'Neill, Ph.D.

This report may not be reproduced except in its entirety.

LABORATORY REPORT

TEI Analytical, Inc.
7177 N. Austin
Niles, IL 60714-4617
847-647-1345

PREPARED FOR:

Frank Jarke
Mostardi-Platt Associates, Inc.
945 Oaklawn Avenue
Elmhurst, IL 60126

Report #: 37525
Report Date: 1/27/00
Sample Received:
11/8/99 15:37

TEI	93006	Type	Total ug	mg/kg	Date	%RSD	Lin.Reg	Blank	CPI	MS	MSD
37550	026	H2O2	0.108		1/12/00	2.61	0.99999	0.084	90.7	112	110
37551	027	KMnO4	0.429		12/14/99	2.45	0.99999	<0.03	94.2	108	107
37552	028	KCl	0.579		1/10/00	0.169	0.99998	0.135	93.8	103	103
37553	029	H2O2	0.170		1/12/00	0.98	0.99999	0.084	90.7	112	110
37554	030	KMnO4	0.291		12/14/99	2.64	0.99999	<0.03	94.2	108	107
37555	031	Filt		0.009	1/11/00	6.89	0.99993	0.098	93.3	109	114
37556	032	Filt		0.004	11/15/99	19.5	0.99976	0.129	102	113	110
37557	033	Filt		0.010	11/15/99	5.81	0.99976	0.129	102	113	110
37558	034	HNO3	<0.002		1/5/00	2.65	0.99998	NA	98	99.6	101
37559	035	KCl	<0.003		1/6/00	6.8	0.99999	NA	99.5	110	92.2
37560	036	H2O2	0.018		1/12/00	0.425	0.99999	0.084	90.7	112	110
37561	037	KMnO4	0.036		12/14/99	2.12	0.99999	<0.03	94.2	108	107
37562	038	NH2OH	<0.003		12/15/99	11.2	0.99999	NA	102	111	111
37563	001Filter	Filt		0.009	11/15/99	12.4	0.99976	0.129	102	113	110
37564	002Filter	Filt		0.009	11/15/99	9.52	0.99976	0.129	102	113	110
37565	003Filter	Filt		0.013	11/15/99	8.85	0.99976	0.129	102	113	110
37566	013Filter	Filt		0.009	11/15/99	8.43	0.99976	0.129	102	113	110
37567	014Filter	Filt		0.009	11/15/99	11.5	0.99976	0.129	102	113	110
37568	015Filter	Filt		0.008	11/15/99	12.8	0.99976	0.129	102	113	110

Gayle E. O'Neill, Ph.D.

This report may not be reproduced except in its entirety.

LABORATORY REPORT

TEI Analytical, Inc.
7177 N. Austin
Niles, IL 60714-4617
847-647-1345

PREPARED FOR:

Frank Jarke
Mostardi-Platt Associates, Inc.
945 Oaklawn Avenue
Elmhurst, IL 60126

Report #: 37525
Report Date: 1/27/00
Sample Received:
11/8/99 15:37

Mercury (Ontario Hydro Method)

The QAPP called for the analysis of all samples in duplicate with every tenth sample run in triplicate. To simplify the instrument setup, we chose to run all samples, blanks, standards, matrix spikes and matrix spike duplicates in triplicate. The reported %RSD is for the triplicate measurements.

All sample results are reported as total micrograms in the sample received by the laboratory, with the exception of the filter samples. The filter sample results are expressed as mg/kg.

The instrument was calibrated at least daily with a blank and four standards. The Lin.Reg. column in this report represents the linear regression coefficient obtained during the calibration.

The laboratory method blank is reported in ug/l in the Blank column of this report. For samples requiring only addition of Hydroxylamine Hydrochloride, NA is entered in this column. No laboratory method blanks were applicable for these samples.

The CPI column presents the % Recovery of an independent standard (obtained from CPI). The calibration curve was prepared in our laboratory from Mercuric Chloride in accordance with EPA Method 7470.

The MS and MSD columns present the % Recovery of the Matrix Spikes and Matrix Spike Duplicates.

Gayle E. O'Neill, Ph.D.

This report may not be reproduced except in its entirety.

COMMERCIAL TESTING & ENGINEERING CO.

GENERAL OFFICES: 1919 SOUTH HIGHLAND AVE., SUITE 210-B, LOMBARD, ILLINOIS 60148 • TEL: 630-953-9300 FAX: 630-953-9306

SINCE 1908®

SGS Member of the SGS Group (Société Générale de Surveillance)

ADDRESS ALL CORRESPONDENCE TO:
16130 VAN DRUNEN RD.
SOUTH HOLLAND, IL 60473
TEL: (708) 331-2900
FAX: (708) 333-3060

October 29, 1999

MOSTARDI-PLATT ASSOCIATES, INC
945 Oaklawn Avenue
Elmhurst, IL 60126
Attn: Frank Jarke

Sample identification by
Mostardi-Platt Assoc., Inc.

Kind of sample reported to us Coal

MPA Sample No: 93006-039
Test 1

Sample taken at ------

Sample taken by Mostardi-Platt Assoc., Inc.

Date sampled October 19, 1999

Date received October 27, 1999

P.O. No. 22455

Analysis Report No. 71-105623 Page 1 of 2

PROXIMATE ANALYSIS	As Received	Dry Basis
% Moisture	30.43	xxxxx
% Ash	4.52	6.49
% Volatile	30.35	43.62
% Fixed Carbon	34.70	49.89
	100.00	100.00
Btu/lb	8530	12261
% Sulfur	0.30	0.43
MAF Btu		13112

ULTIMATE ANALYSIS	As Received	Dry Basis
% Moisture	30.43	xxxxx
% Carbon	49.52	71.18
% Hydrogen	3.54	5.09
% Nitrogen	0.73	1.05
% Sulfur	0.30	0.43
% Ash	4.52	6.49
% Oxygen(diff)	10.96	15.76
	100.00	100.00
CHLORIDE ug/g	203	292

METHODS

Moisture: ASTM D 3302; Ash: ASTM D 3174; Volatile: ASTM D 3175; Fixed Carbon: Calculated Value; ASTM D 3172
Btu/lb: ASTM 3286; Sulfur: ASTM D 4239 (Method C); Carbon, Hydrogen & Nitrogen: ASTM D 5373; Chloride: ASTM D 4208

Respectfully submitted,
COMMERCIAL TESTING & ENGINEERING CO.

98

South Holland Laboratory

MEMBER ACIL

riginal Watermarked For Your Protection

TERMS AND CONDITIONS ON REVERSE

SINCE 1908®

COMMERCIAL TESTING & ENGINEERING CO.

GENERAL OFFICES: 1919 SOUTH HIGHLAND AVE., SUITE 210-B, LOMBARD, ILLINOIS 60148 • TEL: 630-953-9300 FAX: 630-953-9306

SGS Member of the SGS Group (Société Générale de Surveillance)

ADDRESS ALL CORRESPONDENCE TO:
16130 VAN DRUNEN RD.
SOUTH HOLLAND, IL 60473
TEL: (708) 331-2900
FAX: (708) 333-3060

October 29, 1999

MOSTARDI-PLATT ASSOCIATES, INC
945 Oaklawn Avenue
Elmhurst, IL 60126
Attn: Frank Jarke

Sample identification by
Mostardi-Platt Assoc., Inc.

Kind of sample reported to us: Coal

MPA Sample No: 93006-039

Sample taken at: ------

Sample taken by: Mostardi-Platt Assoc., Inc.

Date sampled: October 19, 1999

Date received: October 27, 1999

P.O. No. 22455

Analysis Report No. 71-105623

	Dry Basis, ug/g	MDL, ug/g
Mercury, Hg	0.10	0.01

	Expected	Observed
SARM 1157	0.05	0.05
NIST 1630A	0.11	0.10

MDL Denotes Method Detection Limit

METHOD
Mercury: ASTM D 3684

Respectfully submitted,
COMMERCIAL TESTING & ENGINEERING CO.

South Holland Laboratory

MEMBER ACIL

OVER 40 BRANCH LABORATORIES STRATEGICALLY LOCATED IN PRINCIPAL COAL MINING AREAS, TIDEWATER AND GREAT LAKES PORTS, AND RIVER LOADING FACILITIES

Original Watermarked For Your Protection

TERMS AND CONDITIONS ON REVERSE

COMMERCIAL TESTING & ENGINEERING CO.

GENERAL OFFICES: 1919 SOUTH HIGHLAND AVE., SUITE 210-B, LOMBARD, ILLINOIS 60148 • TEL: 630-953-9300 FAX: 630-953-9306

SINCE 1908®

SGS Member of the SGS Group (Société Générale de Surveillance)

ADDRESS ALL CORRESPONDENCE TO:
16130 VAN DRUNEN RD.
SOUTH HOLLAND, IL 60473
TEL: (708) 331-2900
FAX: (708) 333-3060

October 29, 1999

MOSTARDI-PLATT ASSOCIATES, INC
945 Oaklawn Avenue
Elmhurst, IL 60126
Attn: Frank Jarke

Sample identification by
Mostardi-Platt Assoc., Inc.

Kind of sample reported to us: Coal

MPA Sample No: 93006-040

Test 2

Sample taken at: ------

Sample taken by: Mostardi-Platt Assoc., Inc.

Date sampled: October 19, 1999

Date received: October 27, 1999

P.O. No. 22455

Analysis Report No. 71-105624

PROXIMATE ANALYSIS	As Received	Dry Basis
% Moisture	29.09	xxxxx
% Ash	4.40	6.20
% Volatile	30.80	43.44
% Fixed Carbon	35.71	50.36
	100.00	100.00
Btu/lb	8594	12120
% Sulfur	0.30	0.43
MAF Btu		12921

ULTIMATE ANALYSIS	As Received	Dry Basis
% Moisture	29.09	xxxxx
% Carbon	50.11	70.66
% Hydrogen	3.58	5.05
% Nitrogen	0.72	1.01
% Sulfur	0.30	0.43
% Ash	4.40	6.20
% Oxygen(diff)	11.80	16.65
	100.00	100.00
CHLORIDE ug/g	246	347

METHODS

Moisture: ASTM D 3302; Ash: ASTM D 3174; Volatile: ASTM D 3175; Fixed Carbon: Calculated Value; ASTM D 3172
Btu/lb: ASTM 3286; Sulfur: ASTM D 4239 (Method C); Carbon, Hydrogen & Nitrogen: ASTM D 5373; Chloride: ASTM D 4208

Respectfully submitted,
COMMERCIAL TESTING & ENGINEERING CO.

100

South Holland Laboratory

MEMBER ACIL

riginal Watermarked For Your Protection

TERMS AND CONDITIONS ON REVERSE

COMMERCIAL TESTING & ENGINEERING CO.

GENERAL OFFICES: 1919 SOUTH HIGHLAND AVE., SUITE 210-B, LOMBARD, ILLINOIS 60148 • TEL: 630-953-9300 FAX: 630-953-9306

SINCE 1908®

SGS Member of the SGS Group (Société Générale de Surveillance)

ADDRESS ALL CORRESPONDENCE TO:
16130 VAN DRUNEN RD.
SOUTH HOLLAND, IL 60473
TEL: (708) 331-2900
FAX: (708) 333-3060

October 29, 1999

MOSTARDI-PLATT ASSOCIATES, INC
945 Oaklawn Avenue
Elmhurst, IL 60126
Attn: Frank Jarke

Sample identification by
Mostardi-Platt Assoc., Inc.

Kind of sample reported to us: Coal

MPA Sample No: 93006-040

Sample taken at: ------

Sample taken by: Mostardi-Platt Assoc., Inc.

Date sampled: October 19, 1999

Date received: October 27, 1999

P.O. No. 22455

Analysis Report No. 71-105624

	Dry Basis, ug/g	MDL, ug/g
Mercury, Hg	0.10	0.01

	Expected	Observed
SARM 1157	0.05	0.05
NIST 1630A	0.11	0.10

MDL Denotes Method Detection Limit

METHOD
Mercury: ASTM D 3684

Respectfully submitted,
COMMERCIAL TESTING & ENGINEERING CO.

101

South Holland Laboratory

MEMBER ACIL

COMMERCIAL TESTING & ENGINEERING CO.

GENERAL OFFICES: 1919 SOUTH HIGHLAND AVE., SUITE 210-B, LOMBARD, ILLINOIS 60148 • TEL: 630-953-9300 FAX: 630-953-9306

SINCE 1908®

SGS Member of the SGS Group (Société Générale de Surveillance)

ADDRESS ALL CORRESPONDENCE TO:
16130 VAN DRUNEN RD.
SOUTH HOLLAND, IL 60473
TEL: (708) 331-2900
FAX: (708) 333-3060

October 29, 1999

MOSTARDI-PLATT ASSOCIATES, INC
945 Oaklawn Avenue
Elmhurst, IL 60126
Attn: Frank Jarke

Sample identification by
Mostardi-Platt Assoc., Inc.

Kind of sample reported to us: Coal

MPA Sample No: 93006-041
Test 3

Sample taken at: ------

Sample taken by: Mostardi-Platt Assoc., Inc.

Date sampled: October 19, 1999

Date received: October 27, 1999

P.O. No. 22455

Analysis Report No. 71-105625

PROXIMATE ANALYSIS	As Received	Dry Basis
% Moisture	29.77	xxxxx
% Ash	3.78	5.38
% Volatile	30.65	43.64
% Fixed Carbon	35.80	50.98
	100.00	100.00
Btu/lb	8555	12182
% Sulfur	0.29	0.42
MAF Btu		12875

ULTIMATE ANALYSIS	As Received	Dry Basis
% Moisture	29.77	xxxxx
% Carbon	49.30	70.20
% Hydrogen	3.59	5.11
% Nitrogen	0.71	1.01
% Sulfur	0.29	0.42
% Ash	3.78	5.38
% Oxygen(diff)	12.56	17.88
	100.00	100.00
CHLORIDE ug/g	213	303

METHODS

Moisture: ASTM D 3302; Ash: ASTM D 3174; Volatile: ASTM D 3175; Fixed Carbon: Calculated Value; ASTM D 3172
Btu/lb: ASTM 3286; Sulfur: ASTM D 4239 (Method C); Carbon, Hydrogen & Nitrogen: ASTM D 5373; Chloride: ASTM D 4208

Respectfully submitted,
COMMERCIAL TESTING & ENGINEERING CO.

102

South Holland Laboratory

MEMBER ACIL

COMMERCIAL TESTING & ENGINEERING CO.

GENERAL OFFICES: 1919 SOUTH HIGHLAND AVE., SUITE 210-B, LOMBARD, ILLINOIS 60148 • TEL: 630-953-9300 FAX: 630-953-9306

SINCE 1908®

SGS Member of the SGS Group (Société Générale de Surveillance)

ADDRESS ALL CORRESPONDENCE TO:
16130 VAN DRUNEN RD.
SOUTH HOLLAND, IL 60473
TEL: (708) 331-2900
FAX: (708) 333-3060

October 29, 1999

MOSTARDI-PLATT ASSOCIATES, INC
945 Oaklawn Avenue
Elmhurst, IL 60126
Attn: Frank Jarke

Sample identification by
Mostardi-Platt Assoc., Inc.

Kind of sample reported to us Coal

MPA Sample No: 93006-041

Sample taken at ------

Sample taken by Mostardi-Platt Assoc., Inc.

Date sampled October 19, 1999

Date received October 27, 1999

P.O. No. 22455

Analysis Report No. 71-105625

	Dry Basis, ug/g	MDL, ug/g
Mercury, Hg	0.10	0.01

	Expected	Observed
SARM 1157	0.05	0.05
NIST 1630A	0.11	0.10

MDL Denotes Method Detection Limit

METHOD
Mercury: ASTM D 3684

Respectfully submitted,
COMMERCIAL TESTING & ENGINEERING CO.

South Holland Laboratory

MEMBER ACIL

OVER 40 BRANCH LABORATORIES STRATEGICALLY LOCATED IN PRINCIPAL COAL MINING AREAS, TIDEWATER AND GREAT LAKES PORTS, AND RIVER LOADING FACILITIES

Original Watermarked For Your Protection

TERMS AND CONDITIONS ON REVERSE

LIST OF PARTICIPANTS

Name	Organization	Project Role
Linda Lynch	Alliant Energy	Plant Coordinator
Steve Jackson	Alliant Energy	Plant Coordinator
James R. Platt	Mostardi Platt	Vice President
John Wendell	Mostardi Platt	Laboratory Chemist
Joseph Geiger	Mostardi Platt	Field Engineer
George Kvarta	Mostardi Platt	Test Technician
Norm Smith	Mostardi Platt	Test Technician
Corey Shelby	Mostardi Platt	Test Technician
Gayle E. O'Neill, Ph.D.	TEI Analytical, Inc.	Speciated Hg Sample Analysis
Joseph Houser	CTE	Coal Sample Analysis