100-27
R1-96
Performance

INDIANA-KENTUCKY ELECTRIC CORPORATION
CLIFTY CREEK STATION
1900 - 0700 -- DAILY
UNIT 6 PRECIPITATOR REPORT

	AVC PANEL	#6 WEST			GAS FLOW				6 EAST			GAS FLOW			
1	Sparks/Min.	6	O	E	24	6	O	E	31	6	O	E	103	6	O	E	59
	Pri. Amps.	W	N		1	W	N		4	E	N		108	E	N		03
	Pri. Volts	1	O		164	1	O		155	1	O		152	1	O		209
	Sec. Amps.	A	F		40	A	F		40	A	F		20	A	F		10
	Sec. KV	2	F	W	44	1	F	W	37	2	F	W	35	1	F	W	44
2	Sparks/Min.	6	O	E	12	6	O	E	36	6	O	E	56	6	O	E	68
	Pri. Amps.	W	N		1	W	N		1	E	N		1	E	N		57
	Pri. Volts	2	O		209	2	O		174	2	O		244	2	O		223
	Sec. Amps.	B	F		30	B	F		20	B	F		50	B	F		310
	Sec. KV	2	F	W	28	1	F	W	7	2	F	W	26	1	F	W	19
3	Sparks/Min.	6	O	E	2	6	O	E	58	6	O	E	29	6	O	E	58
	Pri. Amps.	W	N		105	W	N		1	E	N		6	E	N		71
	Pri. Volts	1	O		92	1	O		187	1	O		258	1	O		220
	Sec. Amps.	C	F		1930	C	F		80	C	F		90	C	F		320
	Sec. KV	2	F	W	0	1	F	W	4	2	F	W	31	1	F	W	35
4	Sparks/Min.	6	O	E	30	6	O	E	0	6	O	E	30	6	O	E	28
	Pri. Amps.	W	N		24	W	N		8	E	N		62	E	N		72
	Pri. Volts	2	O		190	2	O		163	2	O		218	2	O		236
	Sec. Amps.	D	F		120	D	F		20	D	F		500	D	F		480
	Sec. KV	2	F	W	28	1	F	W	69	2	F	W	22	1	F	W	10
5	Sparks/Min.	6	O	E	0	6	O	E	1	6	O	E	29	6	O	E	29
	Pri. Amps.	W	N		35	W	N			E	N		135	E	N		165
	Pri. Volts	1	O		110	1	O		132	1	O		249	1	O		243
	Sec. Amps.	E	F		110	E	F		20	E	F		960	E	F		1290
	Sec. KV	2	F	W	50	1	F	W	25	2	F	W	14	1	F	W	30
6	Sparks/Min.	6	O	E	62	6	O	E	57	6	O	E	10	6	O	E	9
	Pri. Amps.	W	N		134	W	N		169	E	N		160	E	N		154
	Pri. Volts	2	O		222	2	O		254	2	O		197	2	O		219
	Sec. Amps.	F	F		1210	F	F		650	F	F		1070	F	F		1160
	Sec. KV	2	F	W	29	1	F	W	23	2	F	W	27	1	F	W	29
7	Sparks/Min.	6	O	E		6	O	E		6	O	E		6	O	E	
	Pri. Amps.	W	N		P.O.R.	W	N		P.O.R.	E	N			E	N		P.O.R.
	Pri. Volts	1	O			1	O			1	O		P.O.R.	1	O		
	Sec. Amps.	G	F			G	F			G	F			G	F		
	Sec. KV	2	F	W		1	F	W		2	F	W		1	F	W	

COMMENTS: * P.O.R. POWER OFF RAPPING

BY: POVALERI
DATE: 11/2/99
TIME: 1230
LOAD: 203
OPACITY: 11.0
T GAS IN: 702
T GAS OUT: 622
WEATHER: RAIN

MARK IN BOX ON LEFT
1. Bus Section
   a. Grounded
   b. TR Disconnected
   c. TR Failure
   d. TR Ground
   e. TR Panel
   f. Meter Malfunction
2. CIRCLE: ON or OFF
3. CIRCLE: OUT OF SERVICE BUS SECTION
   E. East
   W. West
4. CIRCLE: TR UNIT IF VENT FAN IS OUT OF SERVICE (ex. 1A1)

MARK IN BOX ON RIGHT
5. Inoperative Rapper
   a. Electrode
   b. Collector Plate
6. Ash Valve Malfunction
7. Hopper High Level

W		E	

100-27
R1-96
Performance

INDIANA-KENTUCKY ELECTRIC CORPORATION
CLIFTY CREEK STATION
1900 - 0700 -- DAILY
UNIT 6 PRECIPITATOR REPORT

GAS ↓ FLOW   GAS ↓ FLOW

	AVC PANEL	#6 WEST								6 EAST							
	Sparks/Min.	6	O	E	36	6	O	E	19	6	O	E	66	6	O	E	62
	Pri. Amps.	W	N		6	W	N		1	E	N		5	E	N		16
1	Pri. Volts	1	O		173	1	O		151	1	O		182	1	O		193
	Sec. Amps.	A	F		40	A	F		40	A	F		10	A	F		50
	Sec. KV	2	F	W	35	1	F	W	46	2	F	W	39	1	F	W	39
	Sparks/Min.	6	O	E	35	6	O	E	10	6	O	E	68	6	O	E	60
	Pri. Amps.	W	N		7	W	N		2	E	N		3	E	N		31
2	Pri. Volts	2	O		187	2	O		229	2	O		212	2	O		223
	Sec. Amps.	B	F		30	B	F		20	B	F		50	B	F		220
	Sec. KV	2	F	W	7	1	F	W	29	2	F	W	28	1	F	W	19
	Sparks/Min.	6	O	E	59	6	O	E	3	6	O	E	31	6	O	E	60
	Pri. Amps.	W	N		1	W	N		98	E	N		1	E	N		61
3	Pri. Volts	1	O		190	1	O		87	1	O		257	1	O		193
	Sec. Amps.	C	F		50	C	F		1930	C	F		60	C	F		260
	Sec. KV	2	F	W	4	1	F	W	0	2	F	W	31	1	F	W	38
	Sparks/Min.	6	O	E	29	6	O	E	30	6	O	E	29	6	O	E	29
	Pri. Amps.	W	N		4	W	N		37	E	N		45	E	N		69
4	Pri. Volts	2	O		178	2	O		187	2	O		197	2	O		243
	Sec. Amps.	D	F		120	D	F		170	D	F		380	D	F		480
	Sec. KV	2	F	W	29	1	F	W	27	2	F	W	21	1	F	W	11
	Sparks/Min.	6	O	E	0	6	O	E	0	6	O	E	30	6	O	E	29
	Pri. Amps.	W	N		35	W	N		1	E	N		123	E	N		138
5	Pri. Volts	1	O		174	1	O		115	1	O		247	1	O		232
	Sec. Amps.	E	F		100	E	F		20	E	F		1010	E	F		1050
	Sec. KV	2	F	W	50	1	F	W	24	2	F	W	12	1	F	W	32
	Sparks/Min.	6	O	E	61	6	O	E	58	6	O	E	10	6	O	E	10
	Pri. Amps.	W	N		131	W	N		60	E	N		144	E	N		149
6	Pri. Volts	2	O		252	2	O		215	2	O		209	2	O		210
	Sec. Amps.	F	F		1260	F	F		97	F	F		1250	F	F		1230
	Sec. KV	2	F	W	31	1	F	W	21	2	F	W	29	1	F	W	30
	Sparks/Min.	6	O	E		6	O	E		6	O	E		6	O	E	
	Pri. Amps.	W	N		P.OR	W	N		P.OR	E	N		P.OR.	E	N		P.OR.
7	Pri. Volts	1	O			1	O			1	O			1	O		
	Sec. Amps.	G	F			G	F			G	F			G	F		
	Sec. KV	2	F	W		1	F	W		2	F	W		1	F	W	

COMMENTS: P.O.R Power of Rapping

BY: Povaleri
DATE: 11/2/99
TIME: 1300
LOAD: 203
OPACITY: 13.9
T GAS IN: 695
T GAS OUT: 620

WEATHER: Rain

MARK IN BOX ON LEFT
1. Bus Section
   a. Grounded
   b. TR Disconnected
   c. TR Failure
   d. TR Ground
   e. TR Panel
   f. Meter Malfunction
2. CIRCLE:
   ON or OFF
3. CIRCLE: OUT OF
   SERVICE BUS SECTION
   E. East
   W. West
4. CIRCLE: TR UNIT
   IF VENT FAN IS OUT
   OF SERVICE (ex. 1A1)

MARK IN BOX ON RIGHT
5. Inoperative Rapper
   a. Electrode
   b. Collector Plate
6. Ash Valve Malfunction
7. Hopper High Level

W		E	

10C-27
R1-96
Performance

INDIANA-KENTUCKY ELECTRIC CORPORATION
CLIFTY CREEK STATION
1900 - 0700 -- DAILY
UNIT 6 PRECIPITATOR REPORT

GAS FLOW ↓ | GAS FLOW ↓

	AVC PANEL	#6 WEST								6 EAST							
	Sparks/Min.	6	O	E	38	6	O	E	16	6	O	E	62	6	O	E	61
	Pri. Amps.	W	N		1	W	N		1	E	N		1	E	N		2
1	Pri. Volts	1	O		180	1	O		177	1	O		181	1	O		150
	Sec. Amps.	A	F		40	A	F		40	A	F		20	A	F		10
	Sec. KV	2	F	W	36	1	F	W	45	2	F	W	40	1	F	W	42
	Sparks/Min.	6	O	E	38	6	O	E	12	6	O	E	65	6	O	E	60
	Pri. Amps.	W	N		9	W	N		1	E	N		1	E	N		3
2	Pri. Volts	2	O		146	2	O		212	2	O		220	2	O		188
	Sec. Amps.	B	F		40	B	F		20	B	F		60	B	F		60
	Sec. KV	2	F	W	4	1	F	W	28	2	F	W	27	1	F	W	18
	Sparks/Min.	6	O	E	58	6	O	E	2	6	O	E	30	6	O	E	58
	Pri. Amps.	W	N		1	W	N		102	E	N		14	E	N		51
3	Pri. Volts	1	O		131	1	O		91	1	O		262	1	O		181
	Sec. Amps.	C	F		20	C	F		1980	C	F		100	C	F		420
	Sec. KV	2	F	W	6	1	F	W	0	2	F	W	30	1	F	W	32
	Sparks/Min.	6	O	E	0	6	O	E	30	6	O	E	29	6	O	E	30
	Pri. Amps.	W	N		1	W	N		48	E	N		58	E	N		60
4	Pri. Volts	2	O		164	2	O		207	2	O		230	2	O		227
	Sec. Amps.	D	F		30	D	F		330	D	F		430	D	F		430
	Sec. KV	2	F	W	30	1	F	W	27	2	F	W	11	1	F	W	22
	Sparks/Min.	6	O	E	7	6	O	E	0	6	O	E	29	6	O	E	29
	Pri. Amps.	W	N		33	W	N		1	E	N		136	E	N		130
5	Pri. Volts	1	O		163	1	O		117	1	O		210	1	O		206
	Sec. Amps.	E	F		110	E	F		30	E	F		760	E	F		950
	Sec. KV	2	F	W	30	1	F	W	26	2	F	W	13	1	F	W	32
	Sparks/Min.	6	O	E	60	6	O	E	58	6	O	E	9	6	O	E	10
	Pri. Amps.	W	N		119	W	N		122	E	N		138	E	N		148
6	Pri. Volts	2	O		233	2	O		215	2	O		191	2	O		210
	Sec. Amps.	F	F		1030	F	F		570	F	F		1030	F	F		740
	Sec. KV	2	F	W	31	1	F	W	21	2	F	W	28	1	F	W	29
	Sparks/Min.	6	O	E		6	O	E		6	O	E		6	O	E	
	Pri. Amps.	W	N		P.O.R.	W	N		P.O.R.	E	N		P.O.R.	E	N		P.O.R.
7	Pri. Volts	1	O			1	O			1	O			1	O		
	Sec. Amps.	G	F			G	F			G	F			G	F		
	Sec. KV	2	F	W		1	F	W		2	F	W		1	F	W	

COMMENTS: P.O.R. – POWER OF RAPPING

BY: POVALERI
DATE: 11/2/99
TIME: 1330
LOAD: 202
OPACITY: 11.2
T GAS IN: 693
T GAS OUT: 618

WEATHER: RAIN

MARK IN BOX ON LEFT
1. Bus Section
   a. Grounded
   b. TR Disconnected
   c. TR Failure
   d. TR Ground
   e. TR Panel
   f. Meter Malfunction
2. CIRCLE: ON or OFF
3. CIRCLE: OUT OF SERVICE BUS SECTION
   E. East
   W. West
4. CIRCLE: TR UNIT IF VENT FAN IS OUT OF SERVICE (ex. 1A1)

MARK IN BOX ON RIGHT
5. Inoperative Rapper
   a. Electrode
   b. Collector Plate
6. Ash Valve Malfunction
7. Hopper High Level

W		E	

100-27
R1-96
Performance

INDIANA-KENTUCKY ELECTRIC CORPORATION
CLIFTY CREEK STATION
1900 - 0700 -- DAILY
UNIT 6 PRECIPITATOR REPORT

GAS FLOW ↓

	AVC PANEL	#6 WEST								6 EAST							
	Sparks/Min.	6	o	E	35	6	o	E	20	6	o	E	91	6	o	E	60
	Pri. Amps.	W	N		1	W	N		1	E	N		8	E	N		4
1	Pri. Volts	1	o		167	1	o		152	1	o		176	1	o		154
	Sec. Amps.	A	F		40	A	F		40	A	F		0	A	F		0
	Sec. KV	2	F	W	34	1	F	W	38	2	F	W	38	1	F	W	43
	Sparks/Min.	6	o	E	37	6	o	E	12	6	o	E	97	6	o	E	61
	Pri. Amps.	W	N		58	W	N		3	E	N		1	E	N		24
2	Pri. Volts	2	o		161	2	o		222	2	o		186	2	o		223
	Sec. Amps.	B	F		40	B	F		20	B	F		60	B	F		150
	Sec. KV	2	F	W	4	1	F	W	28	2	F	W	24	1	F	W	20
	Sparks/Min.	6	o	E	58	6	o	E	1	6	o	E	31	6	o	E	59
	Pri. Amps.	W	N		1	W	N		91	E	N		12	E	N		28
3	Pri. Volts	1	o		128	1	o		84	1	o		296	1	o		205
	Sec. Amps.	C	F		10	C	F		1770	C	F		90	C	F		180
	Sec. KV	2	F	W	7	1	F	W	0	2	F	W	34	1	F	W	38
	Sparks/Min.	6	o	E	0	6	o	E	29	6	o	E	28	6	o	E	28
	Pri. Amps.	W	N		17	W	N		37	E	N		54	E	N		73
4	Pri. Volts	2	o		163	2	o		212	2	o		210	2	o		245
	Sec. Amps.	D	F		40	D	F		230	D	F		400	D	F		360
	Sec. KV	2	F	W	70	1	F	W	29	2	F	W	23	1	F	W	11
	Sparks/Min.	6	o	E	0	6	o	E	1	6	o	E	29	6	o	E	29
	Pri. Amps.	W	N		33	W	N		1	E	N		136	E	N		116
5	Pri. Volts	1	o		163	1	o		146	1	o		258	1	o		212
	Sec. Amps.	E	F		90	E	F		30	E	F		950	E	F		880
	Sec. KV	2	F	W	50	1	F	W	24	2	F	W	14	1	F	W	31
	Sparks/Min.	6	o	E		6	o	E		6	o	E		6	o	E	
	Pri. Amps.	W	N			W	N			E	N			E	N		
6	Pri. Volts	2	o		P.O.R.	2	o		P.O.R.	2	o		P.O.R.	2	o		P.O.R
	Sec. Amps.	F	F			F	F			F	F			F	F		
	Sec. KV	2	F	W		1	F	W		2	F	W		1	F	W	
	Sparks/Min.	6	o	E	0	6	o	E	59	6	o	E	29	6	o	E	10
	Pri. Amps.	W	N		1	W	N		31	E	N		113	E	N		8
7	Pri. Volts	1	o		102	1	o		150	1	o		230	1	o		190
	Sec. Amps.	G	F		10	G	F		270	G	F		1000	G	F		790
	Sec. KV	2	F	W	54	1	F	W	17	2	F	W	32	1	F	W	25

COMMENTS: P.O.R POWER OFF RAPPING

BY: POVALERI
DATE: 11-2-99
TIME: 1400
LOAD: 202
OPACITY: 23.2
T GAS IN: 691
T GAS OUT: 615

WEATHER: RAIN

MARK IN BOX ON LEFT
1. Bus Section
   a. Grounded
   b. TR Disconnected
   c. TR Failure
   d. TR Ground
   e. TR Panel
   f. Meter Malfunction
2. CIRCLE: ON or OFF
3. CIRCLE: OUT OF SERVICE BUS SECTION
   E. East
   W. West
4. CIRCLE: TR UNIT IF VENT FAN IS OUT OF SERVICE (ex. 1A1)

MARK IN BOX ON RIGHT
5. Inoperative Rapper
   a. Electrode
   b. Collector Plate
6. Ash Valve Malfunction
7. Hopper High Level

W		E	

100-27
R1-96
Performance

INDIANA-KENTUCKY ELECTRIC CORPORATION
CLIFTY CREEK STATION
1900 - 0700 -- DAILY
UNIT 6 PRECIPITATOR REPORT

	AVC PANEL	#6 WEST (GAS FLOW)								6 EAST (GAS FLOW)							
	Sparks/Min.	6	O	E	42	6	O	E	45	6	O	E	86	6	O	E	90
	Pri. Amps.	W	N		1	W	N		1	E	N		3	E	N		4
1	Pri. Volts	1	O		166	1	O		180	1	O		177	1	O		165
	Sec. Amps.	A	F		40	A	F		40	A	F		25	A	F		20
	Sec. KV	2	F	W	33	1	F	W	46	2	F	W	44	1	F	W	36
	Sparks/Min.	6	O	E	39	6	O	E	11	6	O	E	30	6	O	E	58
	Pri. Amps.	W	N		1	W	N		1	E	N		5	E	N		45
2	Pri. Volts	2	O		165	2	O		220	2	O		253	2	O		225
	Sec. Amps.	B	F		40	B	F		20	B	F		60	B	F		220
	Sec. KV	2	F	W	6	1	F	W	26	2	F	W	31	1	F	W	40
	Sparks/Min.	6	O	E	59	6	O	E	1	6	O	E	30	6	O	E	29
	Pri. Amps.	W	N		1	W	N		102	E	N		3	E	N		7
3	Pri. Volts	1	O		176	1	O		91	1	O		286	1	O		251
	Sec. Amps.	C	F		40	C	F		1880	C	F		100	C	F		230
	Sec. KV	2	F	W	6	1	F	W	0	2	F	W	34	1	F	W	39
	Sparks/Min.	6	O	E	30	6	O	E	0	6	O	E	29	6	O	E	29
	Pri. Amps.	W	N		34	W	N		1	E	N		68	E	N		72
4	Pri. Volts	2	O		210	2	O		156	2	O		194	2	O		246
	Sec. Amps.	D	F		200	D	F		30	D	F		300	D	F		460
	Sec. KV	2	F	W	29	1	F	W	69	2	F	W	21	1	F	W	11
	Sparks/Min.	6	O	E	0	6	O	E	000	6	O	E	29	6	O	E	29
	Pri. Amps.	W	N		34	W	N		1	E	N		98	E	N		118
5	Pri. Volts	1	O		164	1	O		146	1	O		243	1	O		206
	Sec. Amps.	E	F		100	E	F		20	E	F		730	E	F		890
	Sec. KV	2	F	W	50	1	F	W	26	2	F	W	17	1	F	W	33
	Sparks/Min.	6	O	E		6	O	E		6	O	E		6	O	E	
	Pri. Amps.	W	N			W	N			E	N			E	N		
6	Pri. Volts	2	O		POR	2	O		POR	2	O		POR	2	O		POR
	Sec. Amps.	F	F			F	F			F	F			F	F		
	Sec. KV	2	F	W		1	F	W		2	F	W		1	F	W	
	Sparks/Min.	6	O	E	0	6	O	E	58	6	O	E	29	6	O	E	10
	Pri. Amps.	W	N		1	W	N		63	E	N		138	E	N		28
7	Pri. Volts	1	O		91	1	O		203	1	O		255	1	O		223
	Sec. Amps.	G	F		20	G	F		780	G	F		1380	G	F		1080
	Sec. KV	2	F	W	54	1	F	W	17	2	F	W	34	1	F	W	26

COMMENTS: POR - Power OFF Rapping.

BY: Lawrence
DATE: 11-2-95
TIME: 1430
LOAD: 203
OPACITY: 21.1
T GAS IN: 694
T GAS OUT: 624
WEATHER:

MARK IN BOX ON LEFT
1. Bus Section
   a. Grounded
   b. TR Disconnected
   c. TR Failure
   d. TR Ground
   e. TR Panel
   f. Meter Malfunction
2. CIRCLE: ON or OFF
3. CIRCLE: OUT OF SERVICE BUS SECTION
   E. East
   W. West
4. CIRCLE: TR UNIT IF VENT FAN IS OUT OF SERVICE (ex. 1A1)

MARK IN BOX ON RIGHT
5. Inoperative Rapper
   a. Electrode
   b. Collector Plate
6. Ash Valve Malfunction
7. Hopper High Level

W		E	

100-27
R1-96
Performance

INDIANA-KENTUCKY ELECTRIC CORPORATION
CLIFTY CREEK STATION
1900 - 0700 -- DAILY
UNIT 6 PRECIPITATOR REPORT

	AVC PANEL	#6 WEST								6 EAST							
					GAS FLOW				GAS FLOW								
	Sparks/Min.	6	O	E	39	6	O	E	53	6	O	E	63	6	O	E	60
	Pri. Amps.	W	N		4	W	N		1	E	N		11	E	N		1
1	Pri. Volts	1	O		152	1	O		153	1	O		178	1	O		156
	Sec. Amps.	A	F		40	A	F		40	A	F		0	A	F		10
	Sec. KV	2	F	W	34	1	F	W	45	2	F	W	40	1	F	W	45
	Sparks/Min.	6	O	E	43	6	O	E	10	6	O	E	77	6	O	E	59
	Pri. Amps.	W	N		2	W	N		4	E	N		3	E	N		27
2	Pri. Volts	2	O		168	2	O		217	2	O		208	2	O		193
	Sec. Amps.	B	F		20	B	F		40	B	F		50	B	F		200
	Sec. KV	2	F	W	7	1	F	W	28	2	F	W	25	1	F	W	18
	Sparks/Min.	6	O	E	59	6	O	E	3	6	O	E	30	6	O	E	58
	Pri. Amps.	W	N		1	W	N		103	E	N		1	E	N		42
3	Pri. Volts	1	O		131	1	O		90	1	O		297	1	O		198
	Sec. Amps.	C	F		40	C	F		1910	C	F		170	C	F		220
	Sec. KV	2	F	W	5	1	F	W	0	2	F	W	33	1	F	W	35
	Sparks/Min.	6	O	E	0	6	O	E	29	6	O	E	29	6	O	E	29
	Pri. Amps.	W	N		3	W	N		37	E	N		45	E	N		60
4	Pri. Volts	2	O		162	2	O		174	2	O		180	2	O		240
	Sec. Amps.	D	F		30	D	F		270	D	F		380	D	F		440
	Sec. KV	2	F	W	70	1	F	W	24	2	F	W	19	1	F	W	11
	Sparks/Min.	6	O	E	6	6	O	E	0	6	O	E	29	6	O	E	29
	Pri. Amps.	W	N		36	W	N		1	E	N		106	E	N		117
5	Pri. Volts	1	O		145	1	O		128	1	O		236	1	O		201
	Sec. Amps.	E	F		100	E	F		30	E	F		760	E	F		870
	Sec. KV	2	F	W	51	1	F	W	26	2	F	W	17	1	F	W	29
	Sparks/Min.	6	O	E		6	O	E		6	O	E		6	O	E	
	Pri. Amps.	W	N			W	N			E	N			E	N		
6	Pri. Volts	2	O		POR	2	O		POR	2	O		POR	2	O		POR
	Sec. Amps.	F	F			F	F			F	F			F	F		
	Sec. KV	2	F	W		1	F	W		2	F	W		1	F	W	
	Sparks/Min.	6	O	E	0	6	O	E	58	6	O	E	29	6	O	E	10
	Pri. Amps.	W	N		1	W	N		49	E	N		106	E	N		33
7	Pri. Volts	1	O		9	1	O		152	1	O		215	1	O		196
	Sec. Amps.	G	F		0	G	F		470	G	F		1030	G	F		1090
	Sec. KV	2	F	W	54	1	F	W	18	2	F	W	34	1	F	W	23

COMMENTS:

BY: Lawrence
DATE: 11-2-99
TIME: 1500
LOAD: 205
OPACITY: 17.6
T GAS IN: 696
T GAS OUT: 615

WEATHER:

MARK IN BOX ON LEFT
1. Bus Section
   a. Grounded
   b. TR Disconnected
   c. TR Failure
   d. TR Ground
   e. TR Panel
   f. Meter Malfunction
2. CIRCLE: ON or OFF
3. CIRCLE: OUT OF SERVICE BUS SECTION
   E. East
   W. West
4. CIRCLE: TR UNIT IF VENT FAN IS OUT OF SERVICE (ex. 1A1)

MARK IN BOX ON RIGHT
5. Inoperative Rapper
   a. Electrode
   b. Collector Plate
6. Ash Valve Malfunction
7. Hopper High Level

W		E	

100-27
R1-96
Performance

INDIANA-KENTUCKY ELECTRIC CORPORATION
CLIFTY CREEK STATION
1900 - 0700 -- DAILY
UNIT 6 PRECIPITATOR REPORT

GAS FLOW ↓ | GAS FLOW ↓

	AVC PANEL	#6 WEST								6 EAST							
	Sparks/Min.	6	O	E	34	6	O	E	23	6	O	E	60	6	O	E	60
	Pri. Amps.	W	N		1	W	N		1	E	N		1	E	N		10
1	Pri. Volts	1	O		162	1	O		168	1	O		167	1	O		160
	Sec. Amps.	A	F		40	A	F		40	A	F		20	A	F		30
	Sec. KV	2	F	W	32	1	F	W	44	2	F	W	38	1	F	W	43
	Sparks/Min.	6	O	E	39	6	O	E	11	6	O	E	66	6	O	E	60
	Pri. Amps.	W	N		21	W	N		3	E	N		1	E	N		39
2	Pri. Volts	2	O		155	2	O		227	2	O		209	2	O		219
	Sec. Amps.	B	F		60	B	F		100	B	F		50	B	F		220
	Sec. KV	2	F	W	5	1	F	W	25	2	F	W	25	1	F	W	118
	Sparks/Min.	6	O	E	59	6	O	E	2	6	O	E	31	6	O	E	58
	Pri. Amps.	W	N		1	W	N		95	E	N		22	E	N		47
3	Pri. Volts	1	O		125	1	O		84	1	O		271	1	O		213
	Sec. Amps.	C	F		10	C	F		1460	C	F		120	C	F		240
	Sec. KV	2	F	W	5	1	F	W	0	2	F	W	34	1	F	W	38
	Sparks/Min.	6	O	E	0	6	O	E	30	6	O	E	29	6	O	E	24
	Pri. Amps.	W	N		4	W	N		15	E	N		64	E	N		59
4	Pri. Volts	2	O		163	2	O		197	2	O		190	2	O		229
	Sec. Amps.	D	F		30	D	F		140	D	F		250	D	F		330
	Sec. KV	2	F	W	70	1	F	W	30	2	F	W	21	1	F	W	11
	Sparks/Min.	6	O	E	0	6	O	E	0	6	O	E	29	6	O	E	29
	Pri. Amps.	W	N		34	W	N		1	E	N		133	E	N		126
5	Pri. Volts	1	O		164	1	O		124	1	O		257	1	O		201
	Sec. Amps.	E	F		100	E	F		20	E	F		940	E	F		940
	Sec. KV	2	F	W	51	1	F	W	24	2	F	W	18	1	F	W	28
	Sparks/Min.	6	O	E		6	O	E		6	O	E		6	O	E	
	Pri. Amps.	W	N			W	N			E	N			E	N		
6	Pri. Volts	2	O		POR	2	O		POR	2	O		POR	2	O		POR
	Sec. Amps.	F	F			F	F			F	F			F	F		
	Sec. KV	2	F	W		1	F	W		2	F	W		1	F	W	
	Sparks/Min.	6	O	E	0	6	O	E	58	6	O	E	29	6	O	E	9
	Pri. Amps.	W	N		1	W	N		62	E	N		124	E	N		34
7	Pri. Volts	1	O		100	1	O		173	1	O		243	1	O		232
	Sec. Amps.	G	F		10	G	F		570	G	F		1460	G	F		1250
	Sec. KV	2	F	W	54	1	F	W	18	2	F	W	35	1	F	W	28

COMMENTS: P.O.R. - Power OFF RAPPING

BY: Poualer I
DATE: 11/2/99
TIME: 1530
LOAD: 205
OPACITY: 16.7
T GAS IN: 695
T GAS OUT: 615

WEATHER:

MARK IN BOX ON LEFT
1. Bus Section
   a. Grounded
   b. TR Disconnected
   c. TR Failure
   d. TR Ground
   e. TR Panel
   f. Meter Malfunction
2. CIRCLE: ON or OFF
3. CIRCLE: OUT OF SERVICE BUS SECTION
   E. East
   W. West
4. CIRCLE: TR UNIT IF VENT FAN IS OUT OF SERVICE (ex. 1A1)

MARK IN BOX ON RIGHT
5. Inoperative Rapper
   a. Electrode
   b. Collector Plate
6. Ash Valve Malfunction
7. Hopper High Level

W		E	

INDIANA-KENTUCKY ELECTRIC CORPORATION
CLIFTY CREEK STATION

MERCURY EMISSION TESTING

DATE 11-3-99 STACK 2 UNIT 6

1. Time		0800	0830	0900	0930	1000	1030
2. Load	(MW)	200	199	200	200	198	198
3. Steam Flow	(MM#/HR)	1200	1190	1200	1200	1200	1200
4. Steam Press.	(PSIG)	2000	2000	2000	2000	2000	2000
5. Steam Temp.	(°F)	1043	1044	1045	1046	1042	1041
6. Air Flow	(MM#/HR)	1320	1300	1320	1300	1300	1290
7. FD Fan, N	(Amps)	181	184	182	183	182	182
FD Fan, S	(Amps)	169	170	170	169	168	168
8. ID Fan	(Amps)	198	200	195	200	200	200
9. Excess Air N	(%)	21	19	21	22	20	19
Excess Air M	(%)	12	15	16	17	16	15
Excess Air S	(%)	16	10	10	10	11	9
10. Boiler Outlet O_2	(%)	3.0	2.9	2.8	3.0	2.8	3.0
11. Gas to Air Htr N 1	(°F)	600	619	620	620	617	615
Gas to Air Htr M 2	(°F)	616	615	616	616	615	613
Gas to Air Htr S 3	(°F)	605	604	604	603	600	599
12. Gas to Precip. 9	(°F)	697	704	709	702	696	694
13. Gas from Precip. 10	(°F)	629	627	628	628	625	624
14. Air Htr. Diff.	(in. H_2O)	3.8	4.0	3.9	4.0	3.9	3.9
15. Furnace Draft	(in. H_2O)	-0.4	-0.7	-0.1	-0.4	-0.1	-0.6
16. Mills in Service		7	7	7	7	7	7
17. Condenser Back Press.	(in. Hg)	1.58	1.59	1.68	1.60	1.62	1.58
18. Soot Blowing Duration		OFF	ON	OFF	ON	ON	ON

Record any boiler or precipitator "abnormal" operations which may have increased stack emissions (i.e., feed trouble, T/R trip)

© Mostardi-Platt Associates, Inc.

Table 4 MERCURY SPECIATION TEST UNIT OPERATING DATA						
Station: Clifty Creek			Unit: #6			
Test Date: 11-3-99			Reviewed By:			
Hourly Readings						
	CEM	0800	0900	1000			
Stack	Stack Flow (SCFH)	89,904,976	89,985,872	90,025,648		89,972,832	scfh
Stack	Temperature (F)	335	335	334			Avg.
Duct	Opacity (%)	7.7	8.5	8.7			
Duct	Carbon Dioxide (CO_2) (%)	11.351	11.338	11.332			

© Mostardi-Platt Associates, Inc.

Table 5
MERCURY SPECIATION TEST FUEL FLOW READING

Date:	11-3-99	Test Hours:	0800 to 1030	Operator	
Unit:	#6			Load (MW):	

		Ending Hour Readings				
		200	199	198		
Data Point	**Read From**	**Hour 0**	**Hour 1**	**Hour 2**	**Hour 3**	**Hour 4**
Feeder 61 (Total Pounds)	Coal Feeder Counter					
Feeder 62 (Total Pounds)	Coal Feeder Counter					
Feeder 63 (Total Pounds)	Coal Feeder Counter					
Feeder 64 (Total Pounds)	Coal Feeder Counter					
Feeder 65 (Total Pounds)	Coal Feeder Counter					
Feeder 66 (Total Pounds)	Coal Feeder Counter					
Feeder 67 (Total Pounds)	Coal Feeder Counter					
Fuel Samples Taken	☐ Yes ☐ No	99.8	99.36	98.86		
Fly Ash Samples Taken	☐ Yes ☐ No	Tons/hr	Tons/hr	Tons/hr		

© Mostardi-Platt Associates, Inc.

100-27
R1-96
Performance

INDIANA-KENTUCKY ELECTRIC CORPORATION
CLIFTY CREEK STATION
1900 - 0700 -- DAILY
UNIT 6 PRECIPITATOR REPORT

GAS FLOW ↓ | GAS FLOW ↓

	AVC PANEL	#6 WEST								6 EAST							
	Sparks/Min.	6	o	E		6	o	E		6	o	E		6	o	E	
	Pri. Amps.	W	N			W	N			E	N			E	N		
1	Pri. Volts	1	o		POR	1	o		POR	1	o		POR	1	o		POR
	Sec. Amps.	A	F			A	F			A	F			A	F		
	Sec. KV	2	F	W		1	F	W		2	F	W		1	F	W	
	Sparks/Min.	6	o	E	030	6	o	E	010	6	o	E	38	6	o	E	60
	Pri. Amps.	W	N		001	W	N		002	E	N		1	E	N		57
2	Pri. Volts	2	o		184	2	o		235	2	o		244	2	o		350
	Sec. Amps.	B	F		010	B	F		010	B	F		50	B	F		250
	Sec. KV	2	F	W	008	1	F	W	031	2	F	W	30	1	F	W	21
	Sparks/Min.	6	o	E	59	6	o	E	008	6	o	E	31	6	o	E	59
	Pri. Amps.	W	N		1	W	N		008	E	N		1	E	N		39
3	Pri. Volts	1	o		121	1	o		089	1	o		324	1	o		211
	Sec. Amps.	C	F		10	C	F		1930	C	F		160	C	F		250
	Sec. KV	2	F	W	5	1	F	W	000	2	F	W	34	1	F	W	39
	Sparks/Min.	6	o	E	0	6	o	E	030	6	o	E	29	6	o	E	30
	Pri. Amps.	W	N		1	W	N		1	E	N		5	E	N		9
4	Pri. Volts	2	o		164	2	o		195	2	o		171	2	o		189
	Sec. Amps.	D	F		20	D	F		180	D	F		140	D	F		170
	Sec. KV	2	F	W	70	1	F	W	28	2	F	W	21	1	F	W	12
	Sparks/Min.	6	o	E		6	o	E	1	6	o	E	29	6	o	E	30
	Pri. Amps.	W	N			W	N		1	E	N		78	E	N		73
5	Pri. Volts	1	o			1	o		131	1	o		214	1	o		210
	Sec. Amps.	E	F			E	F		20	E	F		510	E	F		620
	Sec. KV	2	F	W		1	F	W	26	2	F	W	12	1	F	W	33
	Sparks/Min.	6	o	E	60	6	o	E	58	6	o	E	9	6	o	E	10
	Pri. Amps.	W	N		72	W	N		77	E	N		140	E	N		104
6	Pri. Volts	2	o		202	2	o		201	2	o		212	2	o		191
	Sec. Amps.	F	F		530	F	F		310	F	F		1130	F	F		750
	Sec. KV	2	F	W	29	1	F	W	23	2	F	W	20	1	F	W	30
	Sparks/Min.	6	o	E	0	6	o	E	57	6	o	E	29	6	o	E	10
	Pri. Amps.	W	N		1	W	N		87	E	N		83	E	N		23
7	Pri. Volts	1	o		108	1	o		175	1	o		223	1	o		206
	Sec. Amps.	G	F		10	G	F		480	G	F		980	G	F		960
	Sec. KV	2	F	W	55	1	F	W	18	2	F	W	32	1	F	W	26

COMMENTS:

BY:
DATE: 11-03-99
TIME: 0800
LOAD: 200
OPACITY:
T GAS IN:
T GAS OUT:
WEATHER:

MARK IN BOX ON LEFT
1. Bus Section
   a. Grounded
   b. TR Disconnected
   c. TR Failure
   d. TR Ground
   e. TR Panel
   f. Meter Malfunction
2. CIRCLE: ON or OFF
3. CIRCLE: OUT OF SERVICE BUS SECTION
   E. East
   W. West
4. CIRCLE: TR UNIT IF VENT FAN IS OUT OF SERVICE (ex. 1A1)

MARK IN BOX ON RIGHT
5. Inoperative Rapper
   a. Electrode
   b. Collector Plate
6. Ash Valve Malfunction
7. Hopper High Level

W		E	

100-27
R1-96
Performance

INDIANA-KENTUCKY ELECTRIC CORPORATION
CLIFTY CREEK STATION
1900 - 0700 -- DAILY
UNIT 6 PRECIPITATOR REPORT

GAS ↓ FLOW (#6 WEST) GAS ↓ FLOW (6 EAST)

	AVC PANEL	#6 WEST	ON/OFF			ON/OFF		6 EAST	ON/OFF			ON/OFF	
1	Sparks/Min.	6W1A2	ON OFF	E / W	POR	6W1A1	ON OFF	POR	6E1A2	ON OFF	POR	6E1A1	ON OFF	POR
1	Pri. Amps.												
1	Pri. Volts												
1	Sec. Amps.												
1	Sec. KV												

	AVC PANEL	West panel	Value	West panel	Value	East panel	Value	East panel	Value
1	Sparks/Min.	6W1A2 (ON/OFF, E/W)	POR	6W1A1 (ON/OFF, E/W)	POR	6E1A2 (ON/OFF, E/W)	POR	6E1A1 (ON/OFF, E/W)	POR
1	Pri. Amps.								
1	Pri. Volts								
1	Sec. Amps.								
1	Sec. KV								
2	Sparks/Min.	6W2B2 (ON/OFF, E/W)	31	6W2B1 (ON/OFF, E/W)	10	6E2B2 (ON/OFF, E/W)	44	6E2B1 (ON/OFF, E/W)	60
2	Pri. Amps.		8		1		1		41
2	Pri. Volts		192		232		225		260
2	Sec. Amps.		40		30		40		280
2	Sec. KV		7		30		28		22
3	Sparks/Min.	6W1C2 (ON/OFF, E/W)	58	6W1C1 (ON/OFF, E/W)	1	6E1C2 (ON/OFF, E/W)	31	6E1C1 (ON/OFF, E/W)	59
3	Pri. Amps.		1		97		4		50
3	Pri. Volts		142		89		270		222
3	Sec. Amps.		20		1920		70		270
3	Sec. KV		6		0		33		40
4	Sparks/Min.	6W2D2 (ON/OFF, E/W)	0	6W2D1 (ON/OFF, E/W)	31	6E2D2 (ON/OFF, E/W)	29	6E2D1 (ON/OFF, E/W)	30
4	Pri. Amps.		10		35		36		31
4	Pri. Volts		163		205		196		236
4	Sec. Amps.		10		230		320		290
4	Sec. KV		70		28		20		12
5	Sparks/Min.	6W1E2 (ON/OFF — OFF circled, E/W)		6W1E1 (ON/OFF, E/W)	1	6E1E2 (ON/OFF, E/W)	29	6E1E1 (ON/OFF, E/W)	29
5	Pri. Amps.				1		89		97
5	Pri. Volts				125		244		229
5	Sec. Amps.				20		640		510
5	Sec. KV				25		13		31
6	Sparks/Min.	6W2F2 (ON/OFF, E/W)	64	6W2F1 (ON/OFF, E/W)	56	6E2F2 (ON/OFF, E/W)	10	6E2F1 (ON/OFF, E/W)	10
6	Pri. Amps.		74		73		110		107
6	Pri. Volts		198		198		186		197
6	Sec. Amps.		620		320		740		720
6	Sec. KV		29		21		28		30
7	Sparks/Min.	6W1G2 (ON/OFF, E/W)	0	6W1G1 (ON/OFF, E/W)	58	6E1G2 (ON/OFF, E/W)	29	6E1G1 (ON/OFF, E/W)	10
7	Pri. Amps.		1		85		121		39
7	Pri. Volts		93		197		212		212
7	Sec. Amps.		10		690		1270		1310
7	Sec. KV		55		19		20		27

COMMENTS: ______

BY: 10-3-99
DATE: 0830
TIME:
LOAD: 200
OPACITY:
T GAS IN:
T GAS OUT:

WEATHER:

MARK IN BOX ON LEFT
1. Bus Section
   a. Grounded
   b. TR Disconnected
   c. TR Failure
   d. TR Ground
   e. TR Panel
   f. Meter Malfunction
2. CIRCLE:
   ON or OFF
3. CIRCLE: OUT OF
   SERVICE BUS SECTION
   E. East
   W. West
4. CIRCLE: TR UNIT
   IF VENT FAN IS OUT
   OF SERVICE (ex. 1A1)

MARK IN BOX ON RIGHT
5. Inoperative Rapper
   a. Electrode
   b. Collector Plate
6. Ash Valve Malfunction
7. Hopper High Level

W		E	

100-27
R1-96
Performance

INDIANA-KENTUCKY ELECTRIC CORPORATION
CLIFTY CREEK STATION
1900 - 0700 -- DAILY
UNIT 6 PRECIPITATOR REPORT

	AVC PANEL	#6 WEST								6 EAST							
		GAS FLOW								GAS FLOW							
	Sparks/Min.	6	o	E		6	o	E		6	o	E		6	o	E	
	Pri. Amps.	W	N			W	N			E	N			E	N		
1	Pri. Volts	1	o		POR	1	o		POR	1	o		POR	1	o		POR
	Sec. Amps.	A	F			A	F			A	F			A	F		
	Sec. KV	2	F	W		1	F	W		2	F	W		1	F	W	
	Sparks/Min.	6	o	E	31	6	o	E	11	6	o	E	50	6	o	E	59
	Pri. Amps.	W	N		1	W	N		01	E	N		1	E	N		54
2	Pri. Volts	2	o		171	2	o		232	2	o		238	2	o		237
	Sec. Amps.	B	F		50	B	F		10	B	F		40	B	F		240
	Sec. KV	2	F	W	9	1	F	W	29	2	F	W	29	1	F	W	21
	Sparks/Min.	6	o	E	59	6	o	E	3	6	o	E	60	6	o	E	59
	Pri. Amps.	W	N		1	W	N		101	E	N		30	E	N		56
3	Pri. Volts	1	o		149	1	o		90	1	o		206	1	o		221
	Sec. Amps.	C	F		1960	C	F		1860	C	F		220	C	F		340
	Sec. KV	2	F	W	0	1	F	W	0	2	F	W	40	1	F	W	38
	Sparks/Min.	6	o	E	0	6	o	E	30	6	o	E	30	6	o	E	29
	Pri. Amps.	W	N		17	W	N		29	E	N		23	E	N		6
4	Pri. Volts	2	o		164	2	o		200	2	o		165	2	o		198
	Sec. Amps.	D	F		10	D	F		170	D	F		230	D	F		110
	Sec. KV	2	F	W	70	1	F	W	27	2	F	W	23	1	F	W	12
	Sparks/Min.	6	o	E		6	o	E	1	6	o	E	29	6	o	E	29
	Pri. Amps.	W	N			W	N		1	E	N		69	E	N		120
5	Pri. Volts	1	o			1	o		124	1	o		224	1	o		202
	Sec. Amps.	E	F			E	F		20	E	F		490	E	F		790
	Sec. KV	2	F	W		1	F	W	25	2	F	W	13	1	F	W	18
	Sparks/Min.	6	o	E	64	6	o	E	59	6	o	E	10	6	o	E	9
	Pri. Amps.	W	N		83	W	N		97	E	N		152	E	N		103
6	Pri. Volts	2	o		188	2	o		244	2	o		216	2	o		200
	Sec. Amps.	F	F		160	F	F		430	F	F		1160	F	F		750
	Sec. KV	2	F	W	31	1	F	W	24	2	F	W	30	1	F	W	30
	Sparks/Min.	6	o	E	0	6	o	E	58	6	o	E	29	6	o	E	9
	Pri. Amps.	W	N		1	W	N		90	E	N		144	E	N		30
7	Pri. Volts	1	o		168	1	o		190	1	o		229	1	o		228
	Sec. Amps.	G	F		10	G	F		810	G	F		1290	G	F		1100
	Sec. KV	2	F	W	58	1	F	W	17	2	F	W	31	1	F	W	26

COMMENTS:

BY:
DATE: 10-3-99
TIME: 0900
LOAD: 200
OPACITY:
T GAS IN:
T GAS OUT:
WEATHER:

MARK IN BOX ON LEFT
1. Bus Section
   a. Grounded
   b. TR Disconnected
   c. TR Failure
   d. TR Ground
   e. TR Panel
   f. Meter Malfunction
2. CIRCLE: ON or OFF
3. CIRCLE: OUT OF SERVICE BUS SECTION
   E. East
   W. West
4. CIRCLE: TR UNIT IF VENT FAN IS OUT OF SERVICE (ex. 1A1)

MARK IN BOX ON RIGHT
5. Inoperative Rapper
   a. Electrode
   b. Collector Plate
6. Ash Valve Malfunction
7. Hopper High Level

W		E	

100-27
R1-96
Performance

INDIANA-KENTUCKY ELECTRIC CORPORATION
CLIFTY CREEK STATION
1900 - 0700 -- DAILY
UNIT 6 PRECIPITATOR REPORT

GAS FLOW

	AVC PANEL	#6 WEST							
	Sparks/Min.	6	O	E	35	6	O	E	17
	Pri. Amps.	W	N		10	W	N		1
1	Pri. Volts	1	O		149	1	O		164
	Sec. Amps.	A	F		40	A	F		40
	Sec. KV	2	F	W	32	1	F	W	43
	Sparks/Min.	6	O	E	32	6	O	E	11
	Pri. Amps.	W	N		52	W	N		1
2	Pri. Volts	2	O		189	2	O		204
	Sec. Amps.	B	F		90	B	F		50
	Sec. KV	2	F	W	6	1	F	W	28
	Sparks/Min.	6	O	E	58	6	O	E	5
	Pri. Amps.	W	N		1	W	N		108
3	Pri. Volts	1	O		141	1	O		82
	Sec. Amps.	C	F		10	C	F		1960
	Sec. KV	2	F	W	6	1	F	W	0
	Sparks/Min.	6	O	E	29	6	O	E	30
	Pri. Amps.	W	N		14	W	N		22
4	Pri. Volts	2	O		165	2	O		195
	Sec. Amps.	D	F		170	D	F		130
	Sec. KV	2	F	W	27	1	F	W	28
	Sparks/Min.	6	O	E		6	O	E	0
	Pri. Amps.	W	N			W	N		1
5	Pri. Volts	1	O			1	O		144
	Sec. Amps.	E	F			E	F		36
	Sec. KV	2	F	W		1	F	W	27
	Sparks/Min.	6	O	E	60	6	O	E	58
	Pri. Amps.	W	N		76	W	N		76
6	Pri. Volts	2	O		215	2	O		198
	Sec. Amps.	F	F		740	F	F		370
	Sec. KV	2	F	W	30	1	F	W	23
	Sparks/Min.	6	O	E		6	O	E	
	Pri. Amps.	W	N			W	N		
7	Pri. Volts	1	O		POR	1	O		POR
	Sec. Amps.	G	F			G	F		
	Sec. KV	2	F	W		1	F	W	

GAS FLOW

	6 EAST							
	6	O	E	60	6	O	E	59
	E	N		8	E	N		10
1	1	O		177	1	O		184
	A	F		20	A	F		20
	2	F	W	40	1	F	W	40
	6	O	E	46	6	O	E	49
	E	N		1	E	N		1
2	2	O		212	2	O		228
	B	F		50	B	F		40
	2	F	W	28	1	F	W	28
	6	O	E	31	6	O	E	30
	E	N		5	E	N		40
3	1	O		295	1	O		263
	C	F		60	C	F		180
	2	F	W	34	1	F	W	37
	6	O	E	29	6	O	E	28
	E	N		35	E	N		55
4	2	O		176	2	O		229
	D	F		270	D	F		350
	2	F	W	20	1	F	W	12
	6	O	E	29	6	O	E	29
	E	N		86	E	N		120
5	1	O		231	1	O		216
	E	F		530	E	F		940
	2	F	W	12	1	F	W	31
	6	O	E	10	6	O	E	10
	E	N		158	E	N		99
6	2	O		219	2	O		188
	F	F		1250	F	F		720
	2	F	W	30	1	F	W	29
	6	O	E		6	O	E	
	E	N			E	N		
7	1	O		POR	1	O		POR
	G	F			G	F		
	2	F	W		1	F	W	

COMMENTS:

BY:
DATE: 11-3-99
TIME: 0930
LOAD: 200
OPACITY:
T GAS IN:
T GAS OUT:
WEATHER:

MARK IN BOX ON LEFT
1. Bus Section
   a. Grounded
   b. TR Disconnected
   c. TR Failure
   d. TR Ground
   e. TR Panel
   f. Meter Malfunction
2. CIRCLE: ON or OFF
3. CIRCLE: OUT OF SERVICE BUS SECTION
   E. East
   W. West
4. CIRCLE: TR UNIT IF VENT FAN IS OUT OF SERVICE (ex. 1A1)

MARK IN BOX ON RIGHT
5. Inoperative Rapper
   a. Electrode
   b. Collector Plate
6. Ash Valve Malfunction
7. Hopper High Level

W		E	

100-27
R1-96
Performance

INDIANA-KENTUCKY ELECTRIC CORPORATION
CLIFTY CREEK STATION
1900 - 0700 -- DAILY
UNIT 6 PRECIPITATOR REPORT

GAS ↓ FLOW (#6 WEST) — GAS ↓ FLOW (6 EAST)

AVC	PANEL	#6 WEST				6 EAST			
1	Sparks/Min.	6 O E	35	6 O E	25	6 O E	58	6 O E	60
	Pri. Amps.	W N	8	W N	1	E N	4	E N	13
	Pri. Volts	1 O	156	1 O	175	1 O	162	1 O	172
	Sec. Amps.	A F	40	A F	40	A F	10	A F	10
	Sec. KV	2 F W	34	1 F W	44	2 F W	37	1 F W	44
2	Sparks/Min.	6 O E	33	6 O E	10	6 O E	56	6 O E	59
	Pri. Amps.	W N	3	W N	7	E N	1	E N	43
	Pri. Volts	2 O	167	2 O	231	2 O	209	2 O	238
	Sec. Amps.	B F	20	B F	50	B F	40	B F	290
	Sec. KV	2 F W	6	1 F W	29	2 F W	26	1 F W	20
3	Sparks/Min.	6 O E	59	6 O E	1	6 O E	30	6 O E	58
	Pri. Amps.	W N	1	W N	98	E N	1	E N	49
	Pri. Volts	1 O	151	1 O	88	1 O	267	1 O	212
	Sec. Amps.	C F	50	C F	1920	C F	50	C F	270
	Sec. KV	2 F W	0	1 F W	0	2 F W	33	1 F W	36
4	Sparks/Min.	6 O E	0	6 O E	30	6 O E	30	6 O E	30
	Pri. Amps.	W N	5	W N	21	E N	41	E N	32
	Pri. Volts	2 O	164	2 O	161	2 O	175	2 O	212
	Sec. Amps.	D F	10	D F	150	D F	380	D F	240
	Sec. KV	2 F W	70	1 F W	29	2 F W	21	1 F W	12
5	Sparks/Min.	6 O E		6 O E	0	6 O E	29	6 O E	29
	Pri. Amps.	W N (circled)		W N	1	E N	77	E N	80
	Pri. Volts	1 O (circled)		1 O	140	1 O	213	1 O	197
	Sec. Amps.	E F (circled)		E F	40	E F	460	E F	590
	Sec. KV	2 F (circled) W		1 F W	26	2 F W	12	1 F W	31
6	Sparks/Min.	6 O E	58	6 O E	58	6 O E	10	6 O E	9
	Pri. Amps.	W N	80	W N	80	E N	183	E N	107
	Pri. Volts	2 O	193	2 O	193	2 O	227	2 O	196
	Sec. Amps.	F F	440	F F	310	F F	1420	F F	790
	Sec. KV	2 F W	24	1 F W	21	2 F W	30	1 F W	30
7	Sparks/Min.	6 O E		6 O E		6 O E		6 O E	
	Pri. Amps.	W N	Tor	W N	Tor	E N	TOR	E N	TOR
	Pri. Volts	1 O		1 O		1 O		1 O	
	Sec. Amps.	G F		G F		G F		G F	
	Sec. KV	2 F W		1 F W		2 F W		1 F W	

COMMENTS:

BY:
DATE:
TIME: 1000
LOAD:
OPACITY:
T GAS IN:
T GAS OUT:

WEATHER:

MARK IN BOX ON LEFT
1. Bus Section
   a. Grounded
   b. TR Disconnected
   c. TR Failure
   d. TR Ground
   e. TR Panel
   f. Meter Malfunction
2. CIRCLE:
   ON or OFF
3. CIRCLE: OUT OF
   SERVICE BUS SECTION
   E. East
   W. West
4. CIRCLE: TR UNIT
   IF VENT FAN IS OUT
   OF SERVICE (ex. 1A1)

MARK IN BOX ON RIGHT
5. Inoperative Rapper
   a. Electrode
   b. Collector Plate
6. Ash Valve Malfunction
7. Hopper High Level

W		E	

100-27
R1-96
Performance

INDIANA-KENTUCKY ELECTRIC CORPORATION
CLIFTY CREEK STATION
1900 - 0700 -- DAILY
UNIT 6 PRECIPITATOR REPORT

GAS FLOW ↓ | GAS FLOW ↓

	AVC PANEL	#6 WEST								6 EAST							
	Sparks/Min.	6	O	E	33	6	O	E	25	6	O	E	65	6	O	E	62
	Pri. Amps.	W	N		4	W	N		2	E	N		3	E	N		1
1	Pri. Volts	1	O		180	1	O		178	1	O		187	1	O		193
	Sec. Amps.	A	F		40	A	F		40	A	F		20	A	F		20
	Sec. KV	2	F	W	37	1	F	W	45	2	F	W	35	1	F	W	46
	Sparks/Min.	6	O	E	35	6	O	E	11	6	O	E	53	6	O	E	60
	Pri. Amps.	W	N		6	W	N		4	E	N		2	E	N		35
2	Pri. Volts	2	O		164	2	O		227	2	O		209	2	O		215
	Sec. Amps.	B	F		30	B	F		20	B	F		50	B	F		220
	Sec. KV	2	F	W	6	1	F	W	29	2	F	W	25	1	F	W	19
	Sparks/Min.	6	O	E	59	6	O	E	3	6	O	E	31	6	O	E	59
	Pri. Amps.	W	N		1	W	N		104	E	N		14	E	N		49
3	Pri. Volts	1	O		143	1	O		90	1	O		259	1	O		176
	Sec. Amps.	C	F		26	C	F		1960	C	F		90	C	F		240
	Sec. KV	2	F	W	6	1	F	W	0	2	F	W	30	1	F	W	34
	Sparks/Min.	6	O	E	58	6	O	E	30	6	O	E	30	6	O	E	30
	Pri. Amps.	W	N		1	W	N		3	E	N		40	E	N		21
4	Pri. Volts	2	O		143	2	O		173	2	O		316	2	O		186
	Sec. Amps.	D	F		20	D	F		100	D	F		220	D	F		270
	Sec. KV	2	F	W	6	1	F	W	29	2	F	W	10	1	F	W	13
	Sparks/Min.	6	O	E	0	6	O	E	1	6	O	E	30	6	O	E	59
	Pri. Amps.	W	N		2	W	N		1	E	N		71	E	N		42
5	Pri. Volts	1	O		156	1	O		124	1	O		223	1	O		220
	Sec. Amps.	E	F		10	E	F		30	E	F		540	E	F		280
	Sec. KV	2	F	W	69	1	F	W	25	2	F	W	13	1	F	W	38
	Sparks/Min.	6	O	E	60	6	O	E	58	6	O	E	9	6	O	E	30
	Pri. Amps.	W	N		81	W	N		90	E	N		92	E	N		23
6	Pri. Volts	2	O		200	2	O		223	2	O		184	2	O		207
	Sec. Amps.	F	F		670	F	F		370	F	F		640	F	F		190
	Sec. KV	2	F	W	28	1	F	W	23	2	F	W	30	1	F	W	11
	Sparks/Min.	6	O	E		6	O	E		6	O	E		6	O	E	
	Pri. Amps.	W	N		POR	W	N		POR	E	N		POR	E	N		POR
7	Pri. Volts	1	O			1	O			1	O			1	O		
	Sec. Amps.	G	F			G	F			G	F			G	F		
	Sec. KV	2	F	W		1	F	W		2	F	W		1	F	W	

COMMENTS: _____

BY: _____
DATE: 11-3-99
TIME: 1030
LOAD: _____
OPACITY: _____
T GAS IN: _____
T GAS OUT: _____
WEATHER: _____

MARK IN BOX ON LEFT
1. Bus Section
   a. Grounded
   b. TR Disconnected
   c. TR Failure
   d. TR Ground
   e. TR Panel
   f. Meter Malfunction
2. CIRCLE: ON or OFF
3. CIRCLE: OUT OF SERVICE BUS SECTION
   E. East
   W. West
4. CIRCLE: TR UNIT IF VENT FAN IS OUT OF SERVICE (ex. 1A1)

MARK IN BOX ON RIGHT
5. Inoperative Rapper
   a. Electrode
   b. Collector Plate
6. Ash Valve Malfunction
7. Hopper High Level

W		E	

INDIANA-KENTUCKY ELECTRIC CORPORATION
CLIFTY CREEK STATION

MERCURY EMISSION TESTING

DATE 11-3-99 STACK 2 UNIT 6

1.	Time		1115	1145	1215	1245	1315	1345
2.	Load	(MW)	207	209	210	210	210	210
3.	Steam Flow	(MM#/HR)	1240	1240	1260	1260	1260	1260
4.	Steam Press.	(PSIG)	2000	2000	2000	2000	2000	2000
5.	Steam Temp.	(°F)	1043	1042	1043	1047	1046	1044
6.	Air Flow	(MM#/HR)	1320	1320	1320	1320	1320	1320
7.	FD Fan, N	(Amps)	185	185	185	185	185	185
	FD Fan, S	(Amps)	172	172	170	170	171	170
8.	ID Fan	(Amps)	200	200	202	200	200	205
9.	Excess Air N	(%)	17	17	16	17	16	16
	Excess Air M	(%)	13	13	14	15	14	13
	Excess Air S	(%)	9	9	10	10	10	11
10.	Boiler Outlet O_2	(%)	2.7	2.7	2.7	2.5	2.6	3.0
11.	Gas to Air Htr N	(°F)	616	618	615	610	610	612
	Gas to Air Htr M	(°F)	613	615	610	608	608	610
	Gas to Air Htr S	(°F)	599	600	596	594	595	596
12.	Gas to Precip.	(°F)	700	700	683	690	695	700
13.	Gas from Precip.	(°F)	624	625	620	617	617	620
14.	Air Htr. Diff.	(in. H_2O)	4.1	4.1	4.2	4.0	4.2	4.0
15.	Furnace Draft	(in. H_2O)	-0.7	-0.1	-0.7	-0.1	-0.3	-0.4
16.	Mills in Service		7	7	7	7	7	7
17.	Condenser Back Press.	(in. Hg)	1.61	1.56	1.56	1.58	1.59	1.60
18.	Soot Blowing Duration		ON	ON	OFF	OFF	ON	ON

Record any boiler or precipitator "abnormal" operations which may have increased stack emissions (i.e., feed trouble, T/R trip)

© Mostardi-Platt Associates, Inc.

Table 4 MERCURY SPECIATION TEST UNIT OPERATING DATA	
Station: Clifty	Unit: #6
Test Date: 11/03/99 JMS	Reviewed By:

Hourly Readings

CEM	1100	1200	1300			
Stack Flow	89,514,168	88,727,400	88,566,696		88,936,088	avg. scfh
Temperature	334	336	336			
Opacity	9.0	12.3	14.1			
Carbon Dioxide (CO_2)	11.33	11.01	11.18			

© Mostardi-Platt Associates, Inc.

Table 5
MERCURY SPECIATION TEST FUEL FLOW READING

Date:	11-3-99	Test Hours:	1115 to 1345	Operator	
Unit:	#6			Load (MW):	

		Ending Hour Readings				
Data Point	**Read From**	**Hour 0**	**Hour 1**	**Hour 2**	**Hour 3**	**Hour 4**
Feeder 61 (Total Pounds)	Coal Feeder Counter					
Feeder 62 (Total Pounds)	Coal Feeder Counter					
Feeder 63 (Total Pounds)	Coal Feeder Counter					
Feeder 64 (Total Pounds)	Coal Feeder Counter					
Feeder 65 (Total Pounds)	Coal Feeder Counter					
Feeder 66 (Total Pounds)	Coal Feeder Counter					
Feeder 67 (Total Pounds)	Coal Feeder Counter					
Fuel Samples Taken	☐ Yes ☐ No	103.36	104.86	104.36		
Fly Ash Samples Taken	☐ Yes ☐ No	Tons/hr	Tons/hr	Tons/hr		

© Mostardi-Platt Associates, Inc.

100-27
R1-96
Performance

INDIANA-KENTUCKY ELECTRIC CORPORATION
CLIFTY CREEK STATION
1900 - 0700 -- DAILY
UNIT 6 PRECIPITATOR REPORT

GAS ↓ FLOW (West) GAS ↓ FLOW (East)

	AVC PANEL	#6 WEST								6 EAST							
1	Sparks/Min.	6	O	E	33	6	O	E	29	6	O	E	62	6	O	E	60
	Pri. Amps.	W	N		4	W	N		1	E	N		9	E	N		3
	Pri. Volts	1	O		157	1	O		156	1	O		162	1	O		205
	Sec. Amps.	A	F		40	A	F		40	A	F		10	A	F		10
	Sec. KV	2	F	W	34	1	F	W	38	2	F	W	37	1	F	W	45
2	Sparks/Min.	6	O	E	33	6	O	E	11	6	O	E	63	6	O	E	61
	Pri. Amps.	W	N		5	W	N		5	E	N		1	E	N		41
	Pri. Volts	2	O		177	2	O		231	2	O		198	2	O		243
	Sec. Amps.	B	F		10	B	F		40	B	F		50	B	F		290
	Sec. KV	2	F	W	7	1	F	W	29	2	F	W	27	1	F	W	20
3	Sparks/Min.	6	O	E	59	6	O	E	1	6	O	E	30	6	O	E	59
	Pri. Amps.	W	N		1	W	N		107	E	N		26	E	N		27
	Pri. Volts	1	O		144	1	O		84	1	O		315	1	O		220
	Sec. Amps.	C	F		30	C	F		1890	C	F		220	C	F		350
	Sec. KV	2	F	W	6	1	F	W	0	2	F	W	33	1	F	W	39
4	Sparks/Min.	6	O	E	0	6	O	E	30	6	O	E	29	6	O	E	29
	Pri. Amps.	W	N		1	W	N		47	E	N		39	E	N		19
	Pri. Volts	2	O		154	2	O		165	2	O		209	2	O		215
	Sec. Amps.	D	F		10	D	F		260	D	F		270	D	F		260
	Sec. KV	2	F	W	69	1	F	W	28	2	F	W	23	1	F	W	13
5	Sparks/Min.	6	O	E		6	O	E	1	6	O	E	29	6	O	E	29
	Pri. Amps.	W	N			W	N		1	E	N		94	E	N		86
	Pri. Volts	1	O			1	O		131	1	O		235	1	O		193
	Sec. Amps.	E	F			E	F		20	E	F		470	E	F		640
	Sec. KV	2	F	W		1	F	W	25	2	F	W	12	1	F	W	30
6	Sparks/Min.	6	O	E		6	O	E		6	O	E		6	O	E	
	Pri. Amps.	W	N			W	N			E	N			E	N		
	Pri. Volts	2	O		POR	2	O		POR	2	O		POR	2	O		POR
	Sec. Amps.	F	F			F	F			F	F			F	F		
	Sec. KV	2	F	W		1	F	W		2	F	W		1	F	W	
7	Sparks/Min.	6	O	E	0	6	O	E	58	6	O	E	29	6	O	E	10
	Pri. Amps.	W	N		1	W	N		20	E	N		148	E	N		3
	Pri. Volts	1	O		108	1	O		141	1	O		265	1	O		197
	Sec. Amps.	G	F		10	G	F		280	G	F		1490	G	F		710
	Sec. KV	2	F	W	50	1	F	W	19	2	F	W	31	1	F	W	26

COMMENTS:

BY:
DATE: 11-3-99
TIME: 1115
LOAD:
OPACITY:
T GAS IN:
T GAS OUT:

WEATHER:

MARK IN BOX ON LEFT
1. Bus Section
   a. Grounded
   b. TR Disconnected
   c. TR Failure
   d. TR Ground
   e. TR Panel
   f. Meter Malfunction
2. CIRCLE: ON or OFF
3. CIRCLE: OUT OF SERVICE BUS SECTION
   E. East
   W. West
4. CIRCLE: TR UNIT IF VENT FAN IS OUT OF SERVICE (ex. 1A1)

MARK IN BOX ON RIGHT
5. Inoperative Rapper
   a. Electrode
   b. Collector Plate
6. Ash Valve Malfunction
7. Hopper High Level

W		E	

100-27
R1-96
Performance

INDIANA-KENTUCKY ELECTRIC CORPORATION
CLIFTY CREEK STATION
1900 - 0700 -- DAILY
UNIT 6 PRECIPITATOR REPORT

GAS ↓ FLOW (#6 WEST) GAS ↓ FLOW (6 EAST)

AVC	PANEL	#6 WEST								6 EAST							
1	Sparks/Min.	6	O	E	35	6	O	E	22	6	O	E	77	6	O	E	61
	Pri. Amps.	W	N		4	W	N		1	E	N		4	E	N		2
	Pri. Volts	1	O		160	1	O		177	1	O		180	1	O		187
	Sec. Amps.	A	F		40	A	F		40	A	F		0	A	F		20
	Sec. KV	2	F	W	34	1	F	W	44	2	F	W	41	1	F	W	45
2	Sparks/Min.	6	O	E	37	6	O	E	10	6	O	E	105	6	O	E	61
	Pri. Amps.	W	N		41	W	N		1	E	N		1	E	N		30
	Pri. Volts	2	O		158	2	O		228	2	O		186	2	O		216
	Sec. Amps.	B	F		80	B	F		10	B	F		50	B	F		170
	Sec. KV	2	F	W	6	1	F	W	29	2	F	W	26	1	F	W	20
3	Sparks/Min.	6	O	E	59	6	O	E	6	6	O	E	30	6	O	E	58
	Pri. Amps.	W	N		1	W	N		91	E	N		1	E	N		40
	Pri. Volts	1	O		156	1	O		88	1	O		277	1	O		181
	Sec. Amps.	C	F		50	C	F		1970	C	F		50	C	F		340
	Sec. KV	2	F	W	5	1	F	W	0	2	F	W	34	1	F	W	31
4	Sparks/Min.	6	O	E	0	6	O	E	30	6	O	E	30	6	O	E	29
	Pri. Amps.	W	N		1	W	N		43	E	N		20	E	N		33
	Pri. Volts	2	O		161	2	O		205	2	O		180	2	O		230
	Sec. Amps.	D	F		10	D	F		260	D	F		180	D	F		250
	Sec. KV	2	F	W	70	1	F	W	28	2	F	W	21	1	F	W	13
5	Sparks/Min.	6	O	E		6	O	E	1	6	O	E	29	6	O	E	30
	Pri. Amps.	W	N			W	N		1	E	N		90	E	N		68
	Pri. Volts	1	O (circled)			1	O		140	1	O		236	1	O		196
	Sec. Amps.	E	F (circled)			E	F		40	E	F		470	E	F		480
	Sec. KV	2	F	W		1	F	W	26	2	F	W	12	1	F	W	30
6	Sparks/Min.	6	O	E		6	O	E		6	O	E		6	O	E	
	Pri. Amps.	W	N			W	N			E	N			E	N		
	Pri. Volts	2	O		POR	2	O		POR	2	O		POR	2	O		POR
	Sec. Amps.	F	F			F	F			F	F			F	F		
	Sec. KV	2	F	W		1	F	W		2	F	W		1	F	W	
7	Sparks/Min.	6	O	E	0	6	O	E	58	6	O	E	29	6	O	E	10
	Pri. Amps.	W	N		1	W	N		17	E	N		810	E	N		26
	Pri. Volts	1	O		108	1	O		141	1	O		201	1	O		214
	Sec. Amps.	G	F		10	G	F		260	G	F		720	G	F		940
	Sec. KV	2	F	W	49	1	F	W	17	2	F	W	32	1	F	W	26

COMMENTS:

BY:
DATE: 11/3/99
TIME: 1145
LOAD:
OPACITY:
T GAS IN:
T GAS OUT:

WEATHER:

MARK IN BOX ON LEFT
1. Bus Section
   a. Grounded
   b. TR Disconnected
   c. TR Failure
   d. TR Ground
   e. TR Panel
   f. Meter Malfunction
2. CIRCLE:
   ON or OFF
3. CIRCLE: OUT OF SERVICE BUS SECTION
   E. East
   W. West
4. CIRCLE: TR UNIT IF VENT FAN IS OUT OF SERVICE (ex. 1A1)

MARK IN BOX ON RIGHT
5. Inoperative Rapper
   a. Electrode
   b. Collector Plate
6. Ash Valve Malfunction
7. Hopper High Level

W		E	

100-27
R1-96
Performance

INDIANA-KENTUCKY ELECTRIC CORPORATION
CLIFTY CREEK STATION
1900 - 0700 -- DAILY
UNIT 6 PRECIPITATOR REPORT

GAS ↓ FLOW (#6 WEST) GAS ↓ FLOW (6 EAST)

	AVC PANEL	#6 WEST								6 EAST							
	Sparks/Min.	6	O	E	22	6	O	E	21	6	O	E	58	6	O	E	62
	Pri. Amps.	W	N		9	W	N		1	E	N		3	E	N		3
1	Pri. Volts	1	O		153	1	O		173	1	O		183	1	O		171
	Sec. Amps.	A	F		40	A	F		40	A	F		30	A	F		20
	Sec. KV	2	F	W	38	1	F	W	45	2	F	W	36	1	F	W	45
	Sparks/Min.	6	O	E	12	6	O	E	4	6	O	E	59	6	O	E	60
	Pri. Amps.	W	N		9	W	N		7	E	N		37	E	N		23
2	Pri. Volts	2	O		220	2	O		212	2	O		232	2	O		210
	Sec. Amps.	B	F		60	B	F		40	B	F		240	B	F		260
	Sec. KV	2	F	W	28	1	F	W	27	2	F	W	20	1	F	W	18
	Sparks/Min.	6	O	E	0	6	O	E	3	6	O	E	32	6	O	E	59
	Pri. Amps.	W	N		95	W	N		97	E	N		21	E	N		42
3	Pri. Volts	1	O		84	1	O		84	1	O		259	1	O		208
	Sec. Amps.	C	F		20	C	F		1790	C	F		160	C	F		240
	Sec. KV	2	F	W	5	1	F	W	0	2	F	W	29	1	F	W	39
	Sparks/Min.	6	O	E	0	6	O	E	29	6	O	E	29	6	O	E	29
	Pri. Amps.	W	N		4	W	N		30	E	N		39	E	N		18
4	Pri. Volts	2	O		161	2	O		181	2	O		166	2	O		210
	Sec. Amps.	D	F		10	D	F		110	D	F		340	D	F		150
	Sec. KV	2	F	W	69	1	F	W	29	2	F	W	19	1	F	W	12
	Sparks/Min.	6	O	E		6	O	E	2	6	O	E	29	6	O	E	30
	Pri. Amps.	W	N			W	N		1	E	N		84	E	N		46
5	Pri. Volts	1	O			1	O		136	1	O		233	1	O		183
	Sec. Amps.	E	F			E	F		20	E	F		570	E	F		420
	Sec. KV	2	F	W		1	F	W	26	2	F	W	12	1	F	W	32
	Sparks/Min.	6	O	E		6	O	E		6	O	E		6	O	E	
	Pri. Amps.	W	N		POR	W	N		POR	E	N		POR	E	N		POR
6	Pri. Volts	2	O			2	O			2	O			2	O		
	Sec. Amps.	F	F			F	F			F	F			F	F		
	Sec. KV	2	F	W		1	F	W		2	F	W		1	F	W	
	Sparks/Min.	6	O	E	0	6	O	E	58	6	O	E	9	6	O	E	10
	Pri. Amps.	W	N		1	W	N		15	E	N		14	E	N		21
7	Pri. Volts	1	O		108	1	O		139	1	O		206	1	O		203
	Sec. Amps.	G	F		0	G	F		590	G	F		790	G	F		60
	Sec. KV	2	F	W	56	1	F	W	17	2	F	W	26	1	F	W	26

COMMENTS:

BY:
DATE: 11-3-99
TIME: 1215
LOAD: 210
OPACITY:
T GAS IN:
T GAS OUT:

WEATHER:

MARK IN BOX ON LEFT
1. Bus Section
   a. Grounded
   b. TR Disconnected
   c. TR Failure
   d. TR Ground
   e. TR Panel
   f. Meter Malfunction
2. CIRCLE: ON or OFF
3. CIRCLE: OUT OF SERVICE BUS SECTION
   E. East
   W. West
4. CIRCLE: TR UNIT IF VENT FAN IS OUT OF SERVICE (ex. 1A1)

MARK IN BOX ON RIGHT
5. Inoperative Rapper
   a. Electrode
   b. Collector Plate
6. Ash Valve Malfunction
7. Hopper High Level

W		E	

100-27
R1-96
Performance

INDIANA-KENTUCKY ELECTRIC CORPORATION
CLIFTY CREEK STATION
1900 - 0700 -- DAILY
UNIT 6 PRECIPITATOR REPORT

GAS ↓ FLOW (#6 WEST) GAS ↓ FLOW (6 EAST)

AVC	PANEL	#6 WEST (6W_2) ON/OFF E/W	#6 WEST (6W_1) ON/OFF E/W	6 EAST (6E_2) ON/OFF E/W	6 EAST (6E_1) ON/OFF E/W
1	TR unit	6W1A2	6W1A1	6E1A2	6E1A1
1	Sparks/Min.	32	17	70	60
1	Pri. Amps.	1	1	16	10
1	Pri. Volts	169	180	158	202
1	Sec. Amps.	40	40	10	50
1	Sec. KV	35	46	36	45
2	TR unit	6W2B2	6W2B1	6E2B2	6E2B1
2	Sparks/Min.	37	10	87	61
2	Pri. Amps.	18	2	1	29
2	Pri. Volts	156	220	230	205
2	Sec. Amps.	60	10	50	170
2	Sec. KV	6	29	26	19
3	TR unit	6W1C2	6W1C1	6E1C2	6E1C1
3	Sparks/Min.	58	0	31	58
3	Pri. Amps.	1	95	31	45
3	Pri. Volts	136	91	246	189
3	Sec. Amps.	10	1810	230	180
3	Sec. KV	6	0	26	36
4	TR unit	6W2D2	6W2D1	6E2D2	6E2D1
4	Sparks/Min.	0	30	30	30
4	Pri. Amps.	7	13	29	21
4	Pri. Volts	164	161	194	197
4	Sec. Amps.	10	230	180	176
4	Sec. KV	69	24	20	12
5	TR unit	6W1E2 (OFF circled)	6W1E1	6E1E2	6E1E1
5	Sparks/Min.				
5	Pri. Amps.				
5	Pri. Volts		POR	POR	POR
5	Sec. Amps.				
5	Sec. KV				
6	TR unit	6W2F2	6W2F1	6E2F2	6E2F1
6	Sparks/Min.	63	63	9	10
6	Pri. Amps.	98	104	87	55
6	Pri. Volts	199	221	179	174
6	Sec. Amps.	30	840	630	430
6	Sec. KV	26	29	29	30
7	TR unit	6W1G2	6W1G1	6E1G2	6E1G1
7	Sparks/Min.	0	59	29	9
7	Pri. Amps.	1	21	97	1
7	Pri. Volts	99	149	221	194
7	Sec. Amps.	0	380	810	600
7	Sec. KV	56	17	33	25

COMMENTS:

BY:
DATE: 11-3-99
TIME: 1245
LOAD:
OPACITY:
T GAS IN:
T GAS OUT:

WEATHER:

MARK IN BOX ON LEFT
1. Bus Section
   a. Grounded
   b. TR Disconnected
   c. TR Failure
   d. TR Ground
   e. TR Panel
   f. Meter Malfunction
2. CIRCLE: ON or OFF
3. CIRCLE: OUT OF SERVICE BUS SECTION
   E. East
   W. West
4. CIRCLE: TR UNIT IF VENT FAN IS OUT OF SERVICE (ex. 1A1)

MARK IN BOX ON RIGHT
5. Inoperative Rapper
   a. Electrode
   b. Collector Plate
6. Ash Valve Malfunction
7. Hopper High Level

W		E	

49

100-27
R1-96
Performance

INDIANA-KENTUCKY ELECTRIC CORPORATION
CLIFTY CREEK STATION
1900 - 0700 -- DAILY
UNIT 6 PRECIPITATOR REPORT

	AVC PANEL	#6 WEST								6 EAST							
					GAS FLOW								GAS FLOW				
1	Sparks/Min.	6	O	E	36	6	O	E	23	6	O	E	63	6	O	E	60
	Pri. Amps.	W	N		3	W	N		1	E	N		3	E	N		7
	Pri. Volts	1	O		160	1	O		173	1	O		169	1	O		179
	Sec. Amps.	A	F		40	A	F		40	A	F		20	A	F		20
	Sec. KV	2	F	W	34	1	F	W	44	2	F	W	40	1	F	W	44
2	Sparks/Min.	6	O	E	38	6	O	E	11	6	O	E	83	6	O	E	59
	Pri. Amps.	W	N		41	W	N		1	E	N		1	E	N		25
	Pri. Volts	2	O		178	2	O		227	2	O		227	2	O		215
	Sec. Amps.	B	F		80	B	F		20	B	F		50	B	F		230
	Sec. KV	2	F	W	6	1	F	W	30	2	F	W	27	1	F	W	19
3	Sparks/Min.	6	O	E	58	6	O	E	2	6	O	E	31	6	O	E	59
	Pri. Amps.	W	N		1	W	N		101	E	N		15	E	N		56
	Pri. Volts	1	O		129	1	O		90	1	O		259	1	O		220
	Sec. Amps.	C	F		20	C	F		1960	C	F		190	C	F		280
	Sec. KV	2	F	W	6	1	F	W	0	2	F	W	30	1	F	W	39
4	Sparks/Min.	6	O	E	0	6	O	E	30	6	O	E	30	6	O	E	29
	Pri. Amps.	W	N		9	W	N		25	E	N		38	E	N		13
	Pri. Volts	2	O		164	2	O		187	2	O		193	2	O		201
	Sec. Amps.	D	F		10	D	F		150	D	F		280	D	F		300
	Sec. KV	2	F	W	69	1	F	W	28	2	F	W	22	1	F	W	12
5	Sparks/Min.	6	O	E		6	O	E		6	O	E		6	O	E	
	Pri. Amps.	W	N			W	N			E	N		POR	E	N		POR
	Pri. Volts	1	O			1	O		POR	1	O			1	O		
	Sec. Amps.	E	F			E	F			E	F			E	F		
	Sec. KV	2	F	W		1	F	W		2	F	W		1	F	W	
6	Sparks/Min.	6	O	E	58	6	O	E	63	6	O	E	10	6	O	E	9
	Pri. Amps.	W	N		110	W	N		100	E	N		63	E	N		62
	Pri. Volts	2	O		250	2	O		217	2	O		177	2	O		180
	Sec. Amps.	F	F		500	F	F		890	F	F		520	F	F		420
	Sec. KV	2	F	W	24	1	F	W	29	2	F	W	30	1	F	W	30
7	Sparks/Min.	6	O	E	58	6	O	E	0	6	O	E	28	6	O	E	9
	Pri. Amps.	W	N		39	W	N		1	E	N		89	E	N		1
	Pri. Volts	1	O		139	1	O		115	1	O		226	1	O		199
	Sec. Amps.	G	F		370	G	F		10	G	F		700	G	F		580
	Sec. KV	2	F	W	18	1	F	W	57	2	F	W	33	1	F	W	25

COMMENTS:

BY:
DATE: 11-3-99
TIME: 1315
LOAD:
OPACITY:
T GAS IN:
T GAS OUT:
WEATHER:

MARK IN BOX ON LEFT
1. Bus Section
   a. Grounded
   b. TR Disconnected
   c. TR Failure
   d. TR Ground
   e. TR Panel
   f. Meter Malfunction
2. CIRCLE: ON or OFF
3. CIRCLE: OUT OF SERVICE BUS SECTION
   E. East
   W. West
4. CIRCLE: TR UNIT IF VENT FAN IS OUT OF SERVICE (ex. 1A1)

MARK IN BOX ON RIGHT
5. Inoperative Rapper
   a. Electrode
   b. Collector Plate
6. Ash Valve Malfunction
7. Hopper High Level

W		E	

SUMMARY OF RESULTS CALCULATIONS

$$Vm\ (std) = 17.647 \times Vm \times \left[\frac{P_{bar} + \frac{DH}{13.6}}{(460 + Tm)} \right] \times Y$$

$$Vw\ (std) = 0.0471 \times Vlc$$

Vlc = water + silica net

$$Bws = \left[\frac{Vw\ (std)}{Vw\ (std) + Vm\ (std)} \right]$$

$$Md = (0.44 \times \%CO_2) + (0.32 \times \%O_2) + [0.28 \times (100 - \%CO_2 - \%O_2)]$$

$$MS = Md \times (1 - Bws) + (18 \times Bws)$$

$$Vs = \sqrt{\frac{(Ts + 460)}{Ms \times Ps}} \times \sqrt{DP} \times Cp \times 85.49$$

Cp = pitot tube correction factor
Ps = absolute flue gas pressure
Ms = molecular weight of gas (lb/lb mole)
Md = dry molecular weight of gas (lb/lb mole)
Bws = water vapor in gas stream proportion by volume

$$Acfm = Vs \times Area\ (of\ stack\ or\ duct) \times 60$$

$$Dscfm = Acfm \times 17.647 \times \left[\frac{Ps}{(460 + Ts)} \right] \times (1 - Bws)$$

$$Scfm = Acfm \times 17.647 \times \left[\frac{Ps}{(460 + Ts)} \right]$$

$$Scfh = Scfm \times 60 \frac{min}{hr}$$

©Mostardi-Platt Associates, Inc.

CALCULATION FORMULAS

1. $$V_{m(std)} = V_m Y \left(\frac{T_{std}}{T_m}\right)\left(\frac{P_{bar} + \frac{\Delta H}{13.6}}{P_{std}}\right) = K_1 V_m Y \frac{P_{bar} + \frac{\Delta H}{13.6}}{T_m}$$

2. $$V_{w(std)} = V_{lc}\left(\frac{\rho_w}{M_w}\right)\left(\frac{RT_{std}}{P_{std}}\right) = K_2 V_{lc}$$

3. $$B_{ws} = \frac{V_{w(std)}}{V_{m(std)} + V_{w(std)}}$$

4a. $$C_a = \frac{m_a}{V_a \rho_a}$$

4b. $$W_a = C_a V_{aw} \rho_a$$

5. $$C_S = (15.43 \text{ grains/gram})\,(m_n / V_{m(std)})$$

6. $$C_{acf} = 15.43 K_i \left(\frac{m_n P_s}{V_{w(std)} + V_{m(std)}\ T_s}\right)$$

7. $$\%EA = \left(\frac{\%O_2 - (0.5\ \%CO}{0.264\ \%N_2 - (\%O_2 - 0.5\ \%CO}\right) \times 100$$

8. $$M_d = 0.44(\%CO_2) + 0.32(\%O_2) + 0.28(\%N_2 + \%CO)$$

9. $$M_s = M_d(1 - B_{ws}) + 18.0 B_{ws}$$

10. $$v_s = K_p C_p \sqrt{\frac{\Delta P\ T_s}{P_s M_s}}$$

11. $$Q_{acfm} = v_s A(60_{sec/min})$$

12. $$Q_{sd} = (3600_{sec/hr})(1 - B_{ws})\ v_s \left(\frac{T_{std} P_s}{T_s P_{std}}\right) A$$

13. $$E \text{ (emission rate, lbs/hr)} = Q_{std}\left(C_s / 7000 \text{ grains/lb}\right)$$

14. $$IKV = \frac{T_s V_{m(std)} P_{std}}{T_{std} v_s \theta A_n P_s 60(1 - B_{ws})} = K_4 \frac{T_s V_{m(std)}}{P_s v_s A_n \theta (1 - B_{ws})}$$

© Mostardi-Platt Associates, Inc.

NOMENCLATURE

A = Cross-sectional area of stack or duct, ft^2
A_n = Cross-sectional area of nozzle, ft^2
B_{ws} = Water vapor in gas stream, proportion by volume
C_a = Acetone blank residue concentration, g/g
C_{acf} = Concentration of particulate matter in gas stream at actual conditions, gr/acf
C_p = Pitot tube coefficient, dimensionless
C_s = Concentration of particulate matter in gas stream, dry basis, corrected to standard conditions, gr/dscf
IKV = Isokinetic sampling variance, must be $.90 \leq IKV \leq 1.10$
M_d = Dry molecular weight of gas, lb/lb-mole
m_n = Total amount of particulate matter collected, grams
M_s = Molecular weight of gas, wet basis, lb/lb-mole
M_w = Molecular weight of water, 18.0 lb/lb-mole
m_a = Mass of residue of acetone after evaporation, grams
P_{bar} = Barometric pressure at testing site, in. Hg
P_g = Static pressure of gas, in. Hg (in. H_2O/13.6)
P_s = Absolute pressure of gas, in. Hg = $P_{bar} + P_g$
P_{std} = Standard absolute pressure, 29.92 in. Hg
Q_{acfm} = Actual volumetric gas flow rate, acfm
Q_{sd} = Dry volumetric gas flow rate corrected to standard conditions, dscf/hr
R = Ideal gas constant, 21.85 in. Hg-ft^3/°R-lb-mole
T_m = Absolute dry gas meter temperature, °R
T_s = Absolute gas temperature, °R
T_{std} = Standard absolute temperature, 528°R
V_a = Volume of acetone blank, ml
V_{aw} = Volume of acetone used in wash, ml
V_{lc} = Total volume of liquid collected in impingers and silica gel, ml
V_m = Volume of gas sample as measured by dry gas meter, dcf
$V_{m(std)}$ = Volume of gas sample measured by dry gas meter, corrected to standard conditions, dscf
v_s = Gas velocity, ft/sec
$V_{w(std)}$ = Volume of water vapor in gas sample, corrected to standard conditions, scf
W_a = Weight of residue in acetone wash, grams
Y = Dry gas meter calibration factor
ΔH = Average pressure differential across the orifice meter, in. H_2O
Δp = Velocity head of gas, in. H_2O
ρ_a = Density of acetone, 0.7855 g/ml (average)
ρ_w = Density of water, 0.002201 lb/ml
θ = Total sampling time, minutes
K_1 = 17.64 °R/in. Hg
K_2 = 0.04707 ft^3/ml
K_4 = 0.09450/100 = 0.000945
K_p = Pitot tube constant, $85.49 \frac{ft}{sec}\left[\frac{(lb/lb-mole)(in.Hg)}{(°R)(in.H_2O)}\right]^{1/2}$
%EA = Percent excess air
$\%CO_2$ = Percent carbon dioxide by volume, dry basis
$\%O_2$ = Percent oxygen by volume, dry basis
%CO = Percent carbon monoxide by volume, dry basis
$\%N_2$ = Percent nitrogen by volume, dry basis
0.264 = Ratio of O_2 to N_2 in air, v/v
0.28 = Molecular weight of N_2 or CO, divided by 100
0.32 = Molecular weight of O_2 divided by 100
0.44 = Molecular weight of CO_2 divided by 100
13.6 = Specific gravity of mercury (Hg)

© Mostardi-Platt Associates, Inc.

MERCURY CALCULATIONS

Determination of Speciated Mercury

Concentration

$$\frac{\text{ug of Mercury detected} \times \frac{10^{-6}\,\text{g}}{\text{ug}}}{453.6\,\text{g/lb}} = \text{lbs Mercury/sample}$$

$$\frac{\text{lbs Mercury/sample}}{\text{Vm(std)}} = \text{lbs Mercury/dscf}$$

Emission Rates

$$\text{lbs Mercury/hr} = \text{lbs/dscf} \times \text{dscf/min} \times 60\ \text{min/hr}$$

$$\text{lbs Mercury}/10^{12}\,\text{Btu} = \text{lbs/dscf} \times F_d\,\text{Factor}\left(\text{dscf}/10^{6}\,\text{Btu}\right) \times \frac{20.9\%}{20.9\% - O_2\%} \times 10^{6}$$

Mercury Fractions

Elemental Mercury Catch – mercury collected in the acidified hydrogen peroxide (HNO_3-H_2O_2) and potassium permanganate (H_2SO_4-$KMnO_4$) impinger solutions.

Oxidized Mercury Catch – mercury collected in the aqueous potassium chloride (KCl) impinger solution.

Particle-bound Mercury Catch – mercury associated with the particulate matter collected in the front half of the sampling train.

Determination of Mercury Available from Coal

$$\text{lbs Mercury/hr} = \frac{\text{ug Mercury}}{\text{g Coal}}(\text{dry}) \times \frac{10^{-6}\,\text{g}}{\text{ug}} \times \frac{\text{lbs Coal (wet)}}{\text{hr}} \times (1 - B_{ws})\ \text{moisture corr.}$$

$$\text{lbs Mercury}/10^{12}\,\text{Btu} = \frac{\text{lbs Mercury}}{\text{hr}} \div \frac{10^{12}\,\text{Btu}}{\text{hr}}$$

© Mostardi-Platt Associates, Inc.

EMISSION RATE CALCULATIONS

A pollutant emission rate (E), expressed as pounds of pollutant per million Btu heat input from the fuel combusted can be calculated by several methods as follows:

1. $C = C_s/7000$ where, C = pollutant concentration, lb/dscf
   c_s = pollutant concentration, grains/dscf

2. If fuel flow is monitored and the fuel combusted during the test is sampled and analyzed for gross calorific value, then:

$$E = \frac{Q_{sd} C}{\text{fuel flow rate (lb / hr) GCV}} \times 10^6$$

where, E = lbs per million Btu
GCV = gross calorific value, Btu / lb
Q_{sd} = dry volumetric gas flow at standard conditions, dscf / hr

3. If an integrated gas sample is taken during the test and analyzed for $\%CO_2$ or $\%O_2$, dry basis by volume, with an Orsat gas analyzer, then

$$E = C F_c \frac{100}{(\%CO_2)} \text{ or, } E = C F \frac{20.9}{(20.9 - \%O_2)} \quad \text{where,}$$

$\%CO_2$ and $\%O_2$ are expressed as percent; and, for example, for subbituminous and bituminous coals:

F_c = a factor representing a ratio of the volume of carbon dioxide generated to the calorific value of the fuel combusted, 1800 scf CO_2/million Btu.

F = a factor representing a ratio of the volume of dry flue gases generated to the calorific value of the fuel combusted, 9780 dscf/million Btu.

4. If fuel sample increments are taken and composited during the test and an ultimate analysis is performed and the GCV is determined, then

$$F_c = \frac{321 \times 10^3 (\%C)}{GCV} \quad \text{where, } \%C = \text{carbon content by weight expressed as percent}$$

$$F = \frac{[3.64\,(\%H) + 1.53\,(\%C) + 0.57\,(\%S) + 0.14\,(\%N) - 0.46\,(\%O_2)]}{GVC} \times 10^6$$

where, H, C, S, N, and O are content by weight of hydrogen, carbon, sulfur, nitrogen, and oxygen (expressed as percent) respectively.

5. If fuels other than subbituminous and bituminous coals are fired, other F-factors than those above will apply; and, if combinations of different fuels are fired, the F-factors must be prorated according to the fraction of the total heat input derived from each type of fuel.

© Mostardi-Platt Associates, Inc.

4.0 SAMPLING AND ANALYTICAL PROCEDURES

4.1 Test Methods

4.1.1 Speciated Mercury Emissions

Speciated mercury emissions were determined via the draft "Standard Test Method for Elemental, Oxidized, Particle-Bound, and Total Mercury in Flue Gas Generated from Coal-Fired Stationary Sources (Ontario-Hydro Method)", dated May 12, 1999.

The in-stack filtration (Method 17) configuration was utilized at the inlet and outlet test locations. Figure 4-1 is the schematic of the Ontario-Hydro sampling train.

Figure 4-2 illustrates the sample recovery procedure. The analytical scheme was per Section 13.3 of the Ontario-Hydro Method.

 © Mostardi-Platt Associates, Inc.

Speciated Mercury Sampling Train Equipped with In-Stack Filter

Ontario Hydro Method

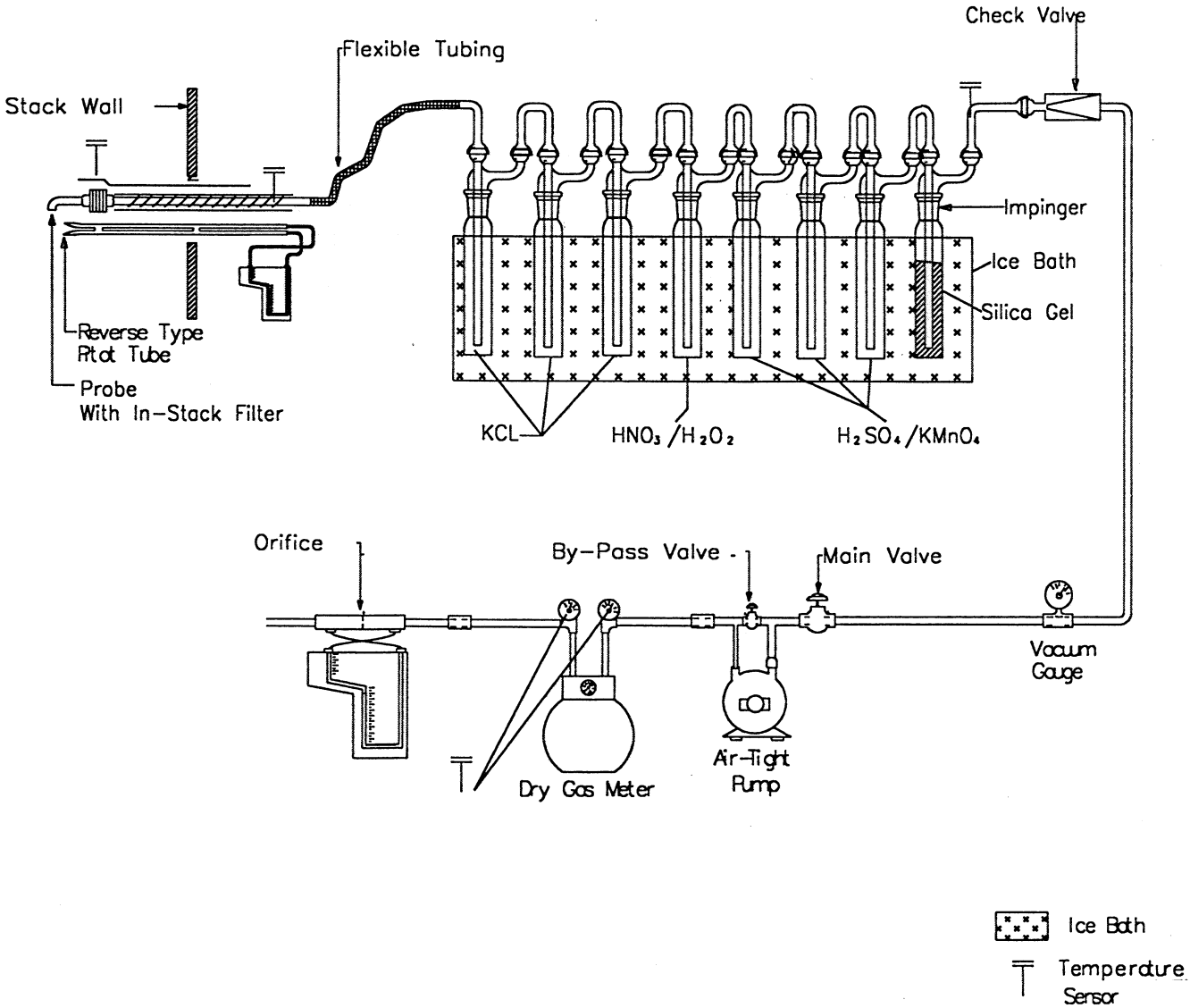

Mostardi Platt

A Full Service Environmental Consulting Company

1. Rinse filter holder and connector with 0.1N HNO_3.
2. Add 5% $^{w}/_{v}$ $KMnO_4$ to each impinger bottle until purple color remains.
3. Rinse with 10% $^{v}/_{v}$ HNO_3.
4. Rinse with a very small amount of 10% $^{w}/_{v}$ $NH_2OH \cdot H_2SO_4$ if brown residue remains.
5. Final rinse with 10% $^{v}/_{v}$ HNO_3.

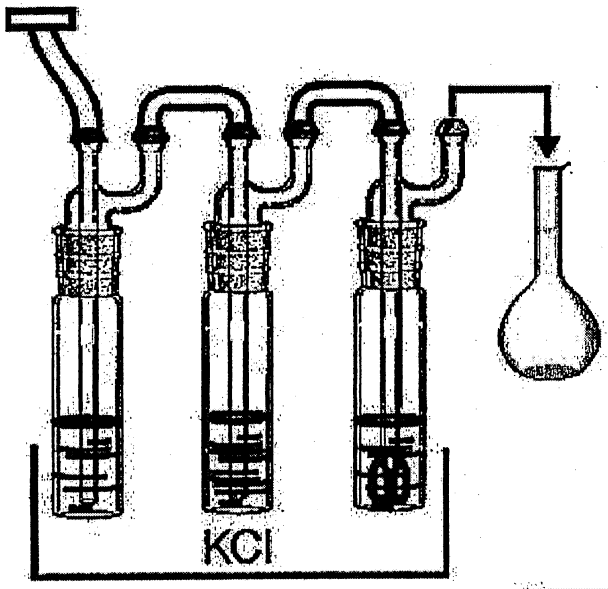

Rinse with 0.1N HNO_3

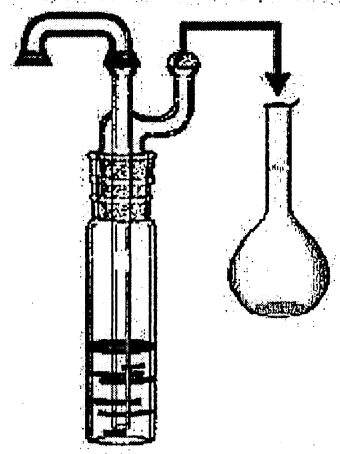

Rinse Bottles Sparingly with
- 0.1N HNO_3
- 10% $^{w}/_{v}$ $NH_2OH \cdot H_2SO_4$
- 0.1N HNO_3

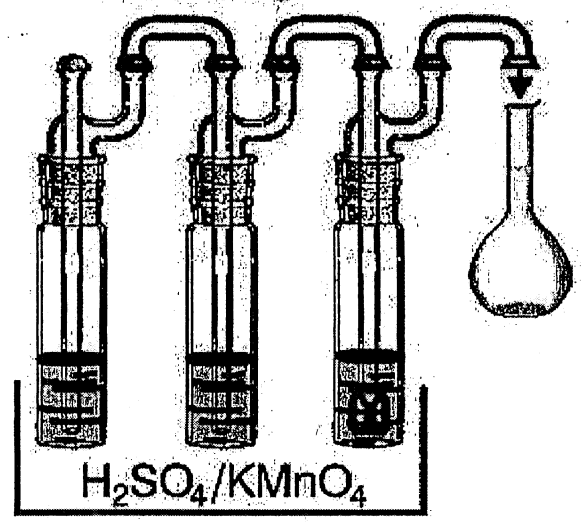

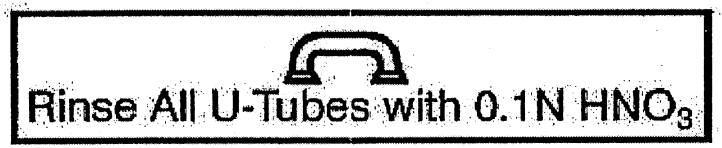

EERC DL16139.CDR

Figure 4-2: Sample Recovery Scheme for Ontario-Hydro Method Samples

4.1.2 Fuel Samples

Fuel samples were collected by composite sampling. Three samples were collected at equally spaced intervals during each speciated mercury sampling run. Each set of three samples was composited into a single sample for each sample run. Sample analysis was conducted according to the procedures of ASTM D3684 and ASTM D4208.

4.2 Procedures for Obtaining Process Data

Plant personnel were responsible for obtaining process-operating data. The process data presented in Table 3-6 was continuously monitored by the facility. Process data was averaged over the course of each sample run.

4.3 Sample Identification and Custody

The chain-of-custody for all samples obtained for analysis can be found in Appendix E.

5.0 INTERNAL QA/QC ACTIVITIES

All sampling, recovery and analytical procedures conform to those described in the site specific test plan. All resultant data was reviewed by the laboratory and Mostardi Platt per the requirements listed in the QAPP and were determined to be valid except where noted below.

5.1 QA/QC Problems

Reagent blanks are required to be less than ten times the detection limit or ten percent of the sample values found. All reagent blank values met this criteria.

The train blank value for the $KMnO_4/H_2SO_4$ impinger at the outlet, Sample ID #030, was more than 30% of the sample value obtained at this location for the $KMnO_4/H_2SO_4$ fraction for Sample ID #024. The test results for this sample location have been qualified per the QAPP.

5.2 QA Audits

5.2.1 Reagent Blanks

As required by the method, blanks were collected for all reagents utilized. The results of reagent blank analysis are presented in Table 5-1.

 © Mostardi-Platt Associates, Inc.

Table 5-1 REAGENT BLANK ANALYSIS				
Sample ID#	**Sample Fraction**	**Contents**	**Mercury (μg)**	**Detection Limit (μg)**
034	Front-half	0.1N HNO_3/Filter	< 0.002	0.002
035	1 N KCl	1 N KCl	0.004	0.003
036	HNO_3/H_2O_2	HNO_3/H_2O_2	< 0.002	0.002
037	$KMnO_4/H_2SO_4$	$KMnO_4/H_2SO_4$	0.004	0.003

5.2.2 Blank Trains

As required by the method, blank trains were collected at both the inlet and stack sampling locations. These trains were collected on November 2, 1999. The results of blank train analysis are presented in Table 5-2.

Table 5-2 BLANK TRAIN ANALYSIS				
Sample ID#	**Sample Fraction**	**Contents**	**Mercury (μg)**	**Detection Limit (μg)**
031, 032, 033	Front-half	Filter	< 0.021	0.021
025	KCl impingers	Impingers/rinse	0.482	0.03
028	KCl impingers	Impingers/rinse	0.370	0.03
026	HNO_3-H_2O_2 impingers	Impingers/rinse	0.124	0.04
029	HNO_3-H_2O_2 impingers	Impingers/rinse	< 0.04	0.04
027	$KMnO_4/H_2SO_4$ impingers	Impingers/rinse	0.246	0.03
030	$KMnO_4/H_2SO_4$ impingers	Impingers/rinse	1.86	0.03

5.2.3 Field Dry Test Meter Audit

The field dry test meter audit described in Section 4.4.1 of Method 5 was completed prior to the test. The results of the audit are presented in Appendix C.

 © Mostardi-Platt Associates, Inc.

APPENDIX

Appendix A: Process Operating Data
Appendix B: Calculations
Appendix C: Raw Field Data and Calibration Data Sheets
Appendix D: Reduced Field Data Sheets
Appendix E: Sampling Log and Chain of Custody Records
Appendix F: Analytical Data Sheets
Appendix G: List of Participants

 © Mostardi-Platt Associates, Inc.

Table 4 MERCURY SPECIATION TEST UNIT OPERATING DATA						
Station: Clifty Creek				Unit: #6		
Test Date: 11-2-99				Reviewed By:		
Hourly Readings						
	CEM	1200	1300	1400	1500		
Stack	Stack Flow (scfh)	88727400	88566696	88290648	88471448	Avg- 88,764,048	scfh
Stack	Temperature (F)	336	336	335	333		
Duct	Opacity (%)	9.1	9.1	9.2	9.2		
Duct	Carbon Dioxide (CO_2)(%)	12.3	14.1	17.9	13.6		

© Mostardi-Platt Associates, Inc.

Table 5
MERCURY SPECIATION TEST FUEL FLOW READING

Date:	11-2-99	Test Hours:	1230 to 1530	Operator	
Unit:	#6			Load (MW):	

		Ending Hour Readings				
		202 MW	202 MW	204 MW		
Data Point	**Read From**	**Hour 0**	**Hour 1**	**Hour 2**	**Hour 3**	**Hour 4**
Feeder 61 (Total Pounds)	Coal Feeder Counter					
Feeder 62 (Total Pounds)	Coal Feeder Counter					
Feeder 63 (Total Pounds)	Coal Feeder Counter					
Feeder 64 (Total Pounds)	Coal Feeder Counter					
Feeder 65 (Total Pounds)	Coal Feeder Counter					
Feeder 66 (Total Pounds)	Coal Feeder Counter					
Feeder 67 (Total Pounds)	Coal Feeder Counter					
Fuel Samples Taken	☑ Yes ☐ No	100.86	101.23	101.86		
Fly Ash Samples Taken	☐ Yes ☐ No	Tons/hr	Tons/hr	Tons/hr		

© Mostardi-Platt Associates, Inc.

ONTARIO HYDRO METHOD DATA ENTRY FORM

Field Data/Calculated Data

Company:	Indiana-Kentucky Electric Corporation
Date:	11/2/99
Test Run:	1
Stack or Duct No.:	Unit 6 Precipitator Outlet
Start Time:	13:00
Stop Time:	15:15

Pb:	29.31	Inches Hg
Static	-3.00	Inches H2O
Ps:	29.09	Inches Hg Abs.
Vlc:	179	ml + grams
Mn:	0.0000	gm
Test Time:	120	minutes
% O2:	6.00	%
% CO2:	13.00	%
% N2:	81.00	%
Delta H:	1.45	Inches H20
Cp:	0.831	Dimensionless - pitot
Tm:	72.25	°F
Sqrt P:	0.809	Inches H20
Ts:	337.75	°F
Vm:	78.462	Cubic Feet
Dn:	0.245	Inches - nozzle
As:	300.00	Sq. Feet
Yd:	1.002	Mcf
CF:	N/A	Process tons/hr
Heat Input:	N/A	MM BTU/hr
Fd:	N/A	dscf/10^6 Btu
Fc:	N/A	scf/10^6 Btu

Vmstd:	76.678	cubic feet (dry)
Vwstd:	8.431	cubic feet (wet)
Bwo:	0.099	
Md:	30.320	lb/lb-mole (dry)
Ms:	29.100	lb/lb-mole (wet)
Excess Air (%)	39.002	
Vs:	55.810	fps
ACFM:	1004587.	
DSCFM:	582401.	
WSCFM:	646438	
%I:	100.6	isokinetic variance
GR/ACF:	---	
GR/DSCF:	---	
lbs/hr	---	
lbs/ton prod.:	N/A	
lbs/MM BTU:	N/A	Heat Input
lbs/MM BTU:	N/A	O2 Basis
lbs/MM BTU:	N/A	CO2 Basis

MOISTURE, DILUENT AND MERCURY DATA

Company Indiana-Kentucky Electric Corpor **Date:** 11/2/99 **Test Run:** 1

Location: Unit 6 Precipitator Outlet

SILICA GEL FINAL WT.:	756.20	**grams**
SILICA GEL INITIAL WT.:	711.80	**grams**
DIFFERENCE:	44.40	
FINAL IMPINGER WATER:	4743.70	**mls.**
INITIAL IMPINGER WATER:	4609.10	**mls.**
DIFFERENCE:	134.60	
TOTAL WATER GAIN:	179.00	

ITEM	MERCURY (UG)		= NET WT. (G)
FILTER:	1.257		0.000001257
PROBE WASH:	0.000		0.000000000
		Particle-bound Total:	0.000001257
KCl:	6.516		0.000006516
		Oxidized Total:	0.000006516
HNO_3/H_2O_2:	0.894		0.000000894
$KMNO_4$:	7.556		0.000007556
		Elemental Total:	0.000008450

Orsat Analysis	1	2	3	Average
Carbon Dioxide:	13.00			13.00
Oxygen:	6.00			6.00

Mostardi Platt

ONTARIO HYDRO METHOD TRAVERSE DATA

Company: Indiana-Kentucky Electric Corporation **Date:** 11/2/99 **Test Run:** 1

Location: Unit 6 Precipitator Outlet

Point	Δp	Sq. Root Δp	Time	Volume cubic feet	ΔH	Stack Temp °F	Meter Inlet °F	Meter Outlet °F	Vacuum in. Hg	
1-1	0.50	0.707	13:00	80.00	1.10	336	77	64	4	2.887
1-2	0.55	0.742	13:05	82.89	1.21	336	77	64	5	2.232
1-3	0.60	0.775	13:10	85.12	1.31	337	72	64	5	3.151
1-4	0.75	0.866	13:15	88.27	1.64	337	71	63	5	3.536
1-5	0.70	0.837	13:20	91.81	1.53	340	71	63	5	3.374
1-6	0.70	0.837	13:25	95.18	1.53	341	70	64	5	3.485
1-7	0.75	0.866	13:30	98.67	1.64	340	70	66	5	3.505
1-8	1.00	1.000	13:35	102.17	2.19	341	71	67	5	4.041
			13:40	106.21						0.000
2-1	0.60	0.775	13:45	106.19	1.31	340	73	68	5	3.223
2-2	0.60	0.775	13:50	109.41	1.31	340	75	68	5	3.190
2-3	0.74	0.860	13:55	112.60	1.62	338	75	68	5	3.470
2-4	0.75	0.866	14:00	116.07	1.64	337	76	70	5	3.545
2-5	0.66	0.812	14:05	119.62	1.45	337	76	71	5	3.297
2-6	0.66	0.812	14:10	122.91	1.45	338	76	71	5	3.258
2-7	0.77	0.877	14:15	126.17	1.69	336	76	72	5	3.546
2-8	0.70	0.837	14:20	129.72	1.53	337	77	72	5	3.462
			14:25	133.18						0.000
3-1	0.81	0.900	14:35	133.19	1.77	336	77	73	5	3.710
3-2	0.78	0.883	14:40	136.90	1.71	336	77	73	5	3.613
3-3	0.66	0.812	14:45	140.51	1.45	336	77	73	5	3.318
3-4	0.55	0.742	14:50	143.83	1.21	336	78	73	5	3.032
3-5	0.55	0.742	14:55	146.86	1.21	337	78	75	5	3.050
3-6	0.50	0.707	15:00	149.91	1.10	338	78	73	5	2.840
3-7	0.50	0.707	15:05	152.75	1.10	338	78	74	5	2.904
3-8	0.47	0.686	15:10	155.66	1.03	338	79	74	5	2.793
			15:15	158.45						0.000
										0.000
										0.000
										0.000
										0.000
										0.000
										0.000
										0.000
										0.000
										0.000
										0.000
										0.000
		0.809		78.462	1.45	338	75	69		#####
							72.25			

ONTARIO HYDRO METHOD TEST SUPPORT DATA

PROJECT NO.:	94403	**TEST RUN NO.:**	1	**TEST DATE:**	11/2/99

CUSTOMER:	Indiana-Kentucky Electric Corporation	**BAROMETRIC PRESSURE (Pb)**	29.31 **in. Hg.**
PLANT:	Clifty Creek Power Plant	**STATIC PRESSURE**	-3 **in. H2O**
TEST LOC.:	Unit 6 Precipitator Outlet	**FLUE PRESSURE (Ps)**	29.09 **in. Hg. abs.**
CLIENT:	Electric Power Research Institute	**PROBE LENGTH:**	18.5 **ft.**
OPERATOR:	A. Dickson	**PROBE LINER MATERIAL:**	Teflon
CONTROL BOX:	E-35	**NOZZLE IDENTIFICATION NO.:**	N/A
METER NO.:	E-35	**CALIBRATED NOZZLE DIAMETER:**	0.245 **in.**
METER CALIBRATION FACTOR:	1.002	**LEAK CHECK PRE:**	0.005 **POST:** 0.004 @ 8 in. Hg.
PITOT ID NO.:	420B	**DUCT SHAPE:**	Circular DIA. Feet Rectangular 20 Feet 15 Feet
PITOT TUBE COEFFICIENT:	0.831	**DUCT AREA:**	300 **sq. ft.**
PORT LENGTH:	12 in.	**TEST LENGTH:**	120 **min.**
PORT SIZE:	4 in.	**MINUTES PER POINT:**	5
PORT TYPE:	Nipple	**TOTAL NUMBER OF TRAVERSE POINTS:**	24

ONTARIO HYDRO METHOD DATA ENTRY FORM

Field Data/Calculated Data

Company:	Indiana-Kentucky Electric Corporation
Date:	11/3/99
Test Run:	3
Stack or Duct No.:	Unit 6 Precipitator Inlet
Start Time:	11:15
Stop Time:	13:23

Pb:	29.32	Inches Hg
Static	-11.40	Inches H2O
Ps:	28.48	Inches Hg Abs.
Vlc:	113	ml + grams
Mn:	0.0000	gm
Test Time:	120	minutes
% O2:	3.70	%
% CO2:	15.00	%
% N2:	81.30	%
Delta H:	0.39	Inches H20
Cp:	0.830	Dimensionless - pitot
Tm:	47.21	°F
Sqrt P:	0.584	Inches H20
Ts:	719.96	°F
Vm:	40.590	Cubic Feet
Dn:	0.237	Inches - nozzle
As:	400.00	Sq. Feet
Yd:	1.000	Mcf
CF:	N/A	Process tons/hr
Heat Input:	N/A	MM BTU/hr
Fd:	N/A	dscf/10^6 Btu
Fc:	N/A	scf/10^6 Btu

Vmstd:	41.447	cubic feet (dry)
Vwstd:	5.341	cubic feet (wet)
Bwo:	0.114	
Md:	30.548	lb/lb-mole (dry)
Ms:	29.116	lb/lb-mole (wet)
Excess Air (%)	20.830	
Vs:	49.415	fps
ACFM:	1185969.	
DSCFM:	447509.	
WSCFM:	505178	
%I:	100.8	isokinetic variance
GR/ACF:	---	
GR/DSCF:	---	
lbs/hr	---	
lbs/ton prod.:	N/A	
lbs/MM BTU:	N/A	Heat Input
lbs/MM BTU:	N/A	O2 Basis
lbs/MM BTU:	N/A	CO2 Basis

MOISTURE, DILUENT AND MERCURY DATA

Company Indiana-Kentucky Electric Corpor **Date:** 11/3/99 **Test Run:** 3

Location: Unit 6 Precipitator Inlet

SILICA GEL FINAL WT.:	754.40	**grams**
SILICA GEL INITIAL WT.:	743.10	**grams**
DIFFERENCE:	11.30	
FINAL IMPINGER WATER:	4614.60	**mls.**
INITIAL IMPINGER WATER:	4512.50	**mls.**
DIFFERENCE:	102.10	
TOTAL WATER GAIN:	113.40	

ITEM	MERCURY (UG)		= NET WT. (G)
FILTER:	0.005		0.000000005
PROBE WASH:	0.000		0.000000000
		Particle-bound Total:	0.000000005
KCl:	3.846		0.000003846
		Oxidized Total:	0.000003846
HNO_3/H_2O_2:	1.130		0.000001130
$KMNO_4$:	11.796		0.000011796
		Elemental Total:	0.000012926

Orsat Analysis	1	2	3	Average
Carbon Dioxide:	15.00	15.00	15.00	15.00
Oxygen:	3.70	3.70	3.70	3.70

ONTARIO HYDRO METHOD TRAVERSE DATA

Company: Indiana-Kentucky Electric Corporation **Date:** 11/3/99 **Test Run:** 3

Location: Unit 6 Precipitator Inlet

Point	Δp	Sq. Root Δp	Time	Volume cubic feet	ΔH	Stack Temp °F	Meter Inlet °F	Meter Outlet °F	Vacuum in. Hg	
1-1	0.36	0.600	11:15	33.88	0.41	724	43	42	5	1.790
1-2	0.32	0.566	11:20	35.67	0.37	729	44	42	5	1.610
1-3	0.30	0.548	11:25	37.28	0.35	729	45	42	5	1.490
1-4	0.35	0.592	11:30	38.77	0.40	730	46	43	5	1.680
			11:35	40.45						0.000
2-1	0.36	0.600	11:37	40.75	0.41	720	47	44	6	1.650
2-2	0.32	0.566	11:42	42.40	0.37	726	47	44	6	1.650
2-3	0.32	0.566	11:47	44.05	0.37	727	48	44	6	1.700
2-4	0.30	0.548	11:52	45.75	0.35	718	48	44	6	1.600
			11:57	47.35						0.000
3-1	0.37	0.608	11:59	47.70	0.40	720	49	45	7.5	1.700
3-2	0.30	0.548	12:04	49.40	0.35	715	49	45	7.5	1.600
3-3	0.30	0.548	12:09	51.00	0.35	715	50	46	7.5	1.600
3-4	0.33	0.574	12:14	52.60	0.38	714	50	46	7.5	1.680
			12:19	54.28						0.000
4-1	0.40	0.632	12:21	54.56	0.46	715	50	46	9.5	1.840
4-2	0.35	0.592	12:26	56.40	0.40	714	50	47	9.5	1.700
4-3	0.30	0.548	12:31	58.10	0.35	716	50	47	9.5	1.700
4-4	0.30	0.548	12:36	59.80	0.35	715	50	47	9.5	1.650
			12:41	61.45						0.000
5-1	0.35	0.592	12:42	61.75	0.40	715	50	47	10	1.650
5-2	0.37	0.608	12:47	63.40	0.42	718	50	48	10	1.850
5-3	0.37	0.608	12:52	65.25	0.42	719	50	48	10	1.750
5-4	0.35	0.592	12:57	67.00	0.40	720	50	48	10	1.650
			13:02	68.65						0.000
6-1	0.43	0.656	13:03	68.95	0.49	714	51	48	11	1.850
6-2	0.33	0.574	13:08	70.80	0.38	720	50	48	11	1.740
6-3	0.36	0.600	13:13	72.54	0.41	724	50	48	11	1.760
6-4	0.36	0.600	13:18	74.30	0.41	722	51	49	11	1.700
			13:23	76.00						0.000
										0.000
										0.000
										0.000
										0.000
										0.000
										0.000
										0.000
										0.000
		0.584		40.590	0.39	720	49	46		#####
							47.21			

ONTARIO HYDRO METHOD TEST SUPPORT DATA

PROJECT NO.:	94403	**TEST RUN NO.:**	3	**TEST DATE:**	11/3/99

CUSTOMER:	Indiana-Kentucky Electric Corporation	**BAROMETRIC PRESSURE (Pb)**	29.32 **in. Hg.**
PLANT:	Clifty Creek Power Plant	**STATIC PRESSURE**	-11.4 **in. H2O**
TEST LOC.:	Unit 6 Precipitator Inlet	**FLUE PRESSURE (Ps)**	28.48 **in. Hg. abs.**
CLIENT:	Electric Power Research Institute	**PROBE LENGTH:**	12 **ft.**
OPERATOR:	J. Platt	**PROBE LINER MATERIAL:**	Glass
CONTROL BOX:	E-26	**NOZZLE IDENTIFICATION NO.:**	Set #1/Nozzle #2
METER NO.:	E-26	**CALIBRATED NOZZLE DIAMETER:**	0.237 **in.**
METER CALIBRATION FACTOR:	1.000	**LEAK CHECK PRE:**	0.000 **POST:** 0.000 @ 13 in. Hg.
PITOT ID NO.:	434A	**DUCT SHAPE:**	Circular DIA. Feet Rectangular 20 Feet 20 Feet
PITOT TUBE COEFFICIENT:	0.830	**DUCT AREA:**	400 **sq. ft.**
PORT LENGTH:	36 in.	**TEST LENGTH:**	120 **min.**
PORT SIZE:	6 in.	**MINUTES PER POINT:**	5
PORT TYPE:	Flange	**TOTAL NUMBER OF TRAVERSE POINTS:**	24

ONTARIO HYDRO METHOD DATA ENTRY FORM

Field Data/Calculated Data

Company:	Indiana-Kentucky Electric Corporation
Date:	11/3/99
Test Run:	2
Stack or Duct No.:	Unit 6 Precipitator Inlet
Start Time:	8:00
Stop Time:	10:10

Pb:	29.32	Inches Hg
Static	-11.40	Inches H2O
Ps:	28.48	Inches Hg Abs.
Vlc:	118	ml + grams
Mn:	0.0000	gm
Test Time:	120	minutes
% O2:	3.80	%
% CO2:	15.00	%
% N2:	81.20	%
Delta H:	0.40	Inches H20
Cp:	0.830	Dimensionless - pitot
Tm:	38.25	°F
Sqrt P:	0.587	Inches H20
Ts:	724.79	°F
Vm:	40.600	Cubic Feet
Dn:	0.237	Inches - nozzle
As:	400.00	Sq. Feet
Yd:	1.000	Mcf
CF:	N/A	Process tons/hr
Heat Input:	N/A	MM BTU/hr
Fd:	N/A	dscf/10^6 Btu
Fc:	N/A	scf/10^6 Btu

Vmstd:	42.203	cubic feet (dry)
Vwstd:	5.548	cubic feet (wet)
Bwo:	0.116	
Md:	30.552	lb/lb-mole (dry)
Ms:	29.094	lb/lb-mole (wet)
Excess Air (%)	21.546	
Vs:	49.768	fps
ACFM:	1194427.	
DSCFM:	447830.	
WSCFM:	506705	
%I:	102.6	isokinetic variance
GR/ACF:	---	
GR/DSCF:	---	
lbs/hr	---	
lbs/ton prod.:	N/A	
lbs/MM BTU:	N/A	Heat Input
lbs/MM BTU:	N/A	O2 Basis
lbs/MM BTU:	N/A	CO2 Basis

MOISTURE, DILUENT AND MERCURY DATA

Company Indiana-Kentucky Electric Corpor **Date:** 11/3/99 **Test Run:** 2

Location: Unit 6 Precipitator Inlet

SILICA GEL FINAL WT.:	776.50	**grams**
SILICA GEL INITIAL WT.:	767.70	**grams**
DIFFERENCE:	8.80	
FINAL IMPINGER WATER:	4837.50	**mls.**
INITIAL IMPINGER WATER:	4728.50	**mls.**
DIFFERENCE:	109.00	
TOTAL WATER GAIN:	117.80	

ITEM	MERCURY (UG)		= NET WT. (G)
FILTER:	0.018		0.000000018
PROBE WASH:	0.000		0.000000000
		Particle-bound Total:	0.000000018
KCl:	4.086		0.000004086
		Oxidized Total:	0.000004086
HNO_3/H_2O_2:	1.020		0.000001020
$KMNO_4$:	11.696		0.000011696
		Elemental Total:	0.000012716

Orsat Analysis	1	2	3	Average
Carbon Dioxide:	15.00	15.00	15.00	15.00
Oxygen:	3.80	3.80	3.80	3.80

ONTARIO HYDRO METHOD TRAVERSE DATA

Company: Indiana-Kentucky Electric Corporation **Date:** 11/3/99 **Test Run:** 2

Location: Unit 6 Precipitator Inlet

Point	Δp	Sq. Root Δp	Time	Volume cubic feet	ΔH	Stack Temp °F	Meter Inlet °F	Meter Outlet °F	Vacuum in. Hg	
1-1	0.34	0.583	8:00	90.31	0.39	718	34	32	5	1.690
1-2	0.33	0.574	8:05	92.00	0.38	724	35	33	5	1.700
1-3	0.30	0.548	8:10	93.70	0.34	723	36	33	5	1.630
1-4	0.33	0.574	8:15	95.33	0.38	725	37	34	5	1.640
			8:20	96.97						0.000
2-1	0.36	0.600	8:22	97.17	0.41	720	38	34	5	1.630
2-2	0.33	0.574	8:27	98.80	0.38	727	38	35	5	1.600
2-3	0.30	0.548	8:32	100.40	0.35	728	40	35	5	1.600
2-4	0.35	0.592	8:37	102.00	0.40	728	40	36	5	1.800
			8:42	103.80						0.000
3-1	0.36	0.600	8:44	104.05	0.41	720	40	36	6.5	1.700
3-2	0.35	0.592	8:49	105.75	0.40	728	40	36	6.5	1.700
3-3	0.30	0.548	8:54	107.45	0.35	732	40	36	6.5	1.600
3-4	0.33	0.574	8:59	109.05	0.38	732	40	37	6.5	1.630
			9:04	110.68						0.000
4-1	0.45	0.671	9:06	110.85	0.52	724	41	37	8	1.950
4-2	0.39	0.624	9:11	112.80	0.45	728	41	37	8	1.800
4-3	0.30	0.548	9:16	114.60	0.35	726	41	38	8	1.630
4-4	0.30	0.548	9:21	116.23	0.35	726	41	38	8	1.570
			9:26	117.80						0.000
5-1	0.36	0.600	9:28	118.08	0.41	721	41	38	8	1.720
5-2	0.36	0.600	9:33	119.80	0.41	726	41	38	8	1.690
5-3	0.35	0.592	9:38	121.49	0.40	725	41	38	8	1.750
5-4	0.35	0.592	9:43	123.24	0.40	725	42	39	8	1.760
			9:48	125.00						0.000
6-1	0.43	0.656	9:50	125.43	0.49	720	42	39	10	1.870
6-2	0.33	0.574	9:55	127.30	0.38	721	42	39	10	1.630
6-3	0.33	0.574	10:00	128.93	0.38	723	43	40	10	1.600
6-4	0.35	0.592	10:05	130.53	0.40	725	44	40	10	1.710
			10:10	132.24						0.000
										0.000
										0.000
										0.000
										0.000
										0.000
										0.000
										0.000
										0.000
		0.587		40.600	0.40	725	40	37		#####
							38.25			

ONTARIO HYDRO METHOD TEST SUPPORT DATA

PROJECT NO.:	94403	**TEST RUN NO.:**	2	**TEST DATE:**	11/3/99

CUSTOMER:	Indiana-Kentucky Electric Corporation	**BAROMETRIC PRESSURE (Pb)**	29.32 **in. Hg.**
PLANT:	Clifty Creek Power Plant	**STATIC PRESSURE**	-11.4 **in. H2O**
TEST LOC.:	Unit 6 Precipitator Inlet	**FLUE PRESSURE (Ps)**	28.48 **in. Hg. abs.**
CLIENT:	Electric Power Research Institute	**PROBE LENGTH:**	12 **ft.**
OPERATOR:	J. Platt	**PROBE LINER MATERIAL:**	Glass
CONTROL BOX:	E-26	**NOZZLE IDENTIFICATION NO.:**	Set #1/Nozzle #2
METER NO.:	E-26	**CALIBRATED NOZZLE DIAMETER:**	0.237 **in.**
METER CALIBRATION FACTOR:	1.000	**LEAK CHECK PRE:**	0.000 **POST:** 0.000 @ 15 in. Hg.
PITOT ID NO.:	434A	**DUCT SHAPE:**	Circular DIA. Feet Rectangular 20 Feet 20 Feet
PITOT TUBE COEFFICIENT:	0.830	**DUCT AREA:**	400 **sq. ft.**
PORT LENGTH:	36 in.	**TEST LENGTH:**	120 **min.**
PORT SIZE:	6 in.	**MINUTES PER POINT:**	5
PORT TYPE:	Flange	**TOTAL NUMBER OF TRAVERSE POINTS:**	24

Mostardi Platt

ONTARIO HYDRO METHOD DATA ENTRY FORM

Field Data/Calculated Data

Company:	Indiana-Kentucky Electric Corporation
Date:	11/2/99
Test Run:	1
Stack or Duct No.:	Unit 6 Precipitator Inlet
Start Time:	12:30
Stop Time:	14:41

Pb:	29.28	Inches Hg
Static	-11.20	Inches H2O
Ps:	28.46	Inches Hg Abs.
Vlc:	122	ml + grams
Mn:	0.0000	gm
Test Time:	120	minutes
% O2:	3.90	%
% CO2:	14.80	%
% N2:	81.30	%
Delta H:	0.40	Inches H20
Cp:	0.830	Dimensionless - pitot
Tm:	55.00	°F
Sqrt P:	0.576	Inches H20
Ts:	719.79	°F
Vm:	41.940	Cubic Feet
Dn:	0.237	Inches - nozzle
As:	400.00	Sq. Feet
Yd:	1.000	Mcf
CF:	N/A	Process tons/hr
Heat Input:	N/A	MM BTU/hr
Fd:	N/A	dscf/10^6 Btu
Fc:	N/A	scf/10^6 Btu

Vmstd:	42.121	cubic feet (dry)
Vwstd:	5.751	cubic feet (wet)
Bwo:	0.120	
Md:	30.524	lb/lb-mole (dry)
Ms:	29.019	lb/lb-mole (wet)
Excess Air (%)	22.206	
Vs:	48.865	fps
ACFM:	1172756.	
DSCFM:	439210.	
WSCFM:	499177	
%I:	104.4	isokinetic variance
GR/ACF:	---	
GR/DSCF:	---	
lbs/hr	---	
lbs/ton prod.:	N/A	
lbs/MM BTU:	N/A	Heat Input
lbs/MM BTU:	N/A	O2 Basis
lbs/MM BTU:	N/A	CO2 Basis

MOISTURE, DILUENT AND MERCURY DATA

Company Indiana-Kentucky Electric Corpor **Date:** 11/2/99 **Test Run:** 1

Location: Unit 6 Precipitator Inlet

SILICA GEL FINAL WT.:	702.20	**grams**
SILICA GEL INITIAL WT.:	692.10	**grams**
DIFFERENCE:	10.10	
FINAL IMPINGER WATER:	4819.80	**mls.**
INITIAL IMPINGER WATER:	4707.80	**mls.**
DIFFERENCE:	112.00	
TOTAL WATER GAIN:	122.10	

ITEM	MERCURY (UG)		= NET WT. (G)
FILTER:	0.452		0.000000452
PROBE WASH:	0.000		0.000000000
		Particle-bound Total:	0.000000452
KCl:	2.656		0.000002656
		Oxidized Total:	0.000002656
HNO_3/H_2O_2:	0.756		0.000000756
$KMNO_4$:	11.896		0.000011896
		Elemental Total:	0.000012652

Orsat Analysis	1	2	3	Average
Carbon Dioxide:	14.80	14.80		14.80
Oxygen:	3.90	3.90		3.90

ONTARIO HYDRO METHOD TRAVERSE DATA

Company: Indiana-Kentucky Electric Corporation **Date:** 11/2/99 **Test Run:** 1

Location: Unit 6 Precipitator Inlet

Point	Δp	Sq. Root Δp	Time	Volume cubic feet	ΔH	Stack Temp °F	Meter Inlet °F	Meter Outlet °F	Vacuum in. Hg	
1-1	0.34	0.583	12:30	44.34	0.41	723	53	52	1	1.660
1-2	0.30	0.548	12:35	46.00	0.36	726	55	53	1	1.500
1-3	0.30	0.548	12:40	47.50	0.36	723	56	53	1	1.800
1-4	0.33	0.574	12:45	49.30	0.40	720	57	53	1	1.750
			12:50	51.05						0.000
2-1	0.35	0.592	12:53	51.71	0.42	720	57	54	4	1.640
2-2	0.31	0.557	12:58	53.35	0.37	720	58	54	4	1.900
2-3	0.30	0.548	13:03	55.25	0.36	721	59	54	4	1.650
2-4	0.30	0.548	13:08	56.90	0.36	720	59	55	4	1.700
			13:13	58.60						0.000
3-1	0.39	0.624	13:15	59.30	0.47	715	58	54	6	1.800
3-2	0.32	0.566	13:20	61.10	0.38	715	59	55	6	1.750
3-3	0.30	0.548	13:25	62.85	0.36	720	57	54	6	1.650
3-4	0.32	0.566	13:30	64.50	0.38	720	56	54	6	1.800
			13:35	66.30						0.000
4-1	0.43	0.656	13:37	66.70	0.52	718	56	54	8	1.950
4-2	0.36	0.600	13:42	68.65	0.43	718	56	54	8	1.850
4-3	0.30	0.548	13:47	70.50	0.36	719	56	53	8	1.700
4-4	0.30	0.548	13:52	72.20	0.36	719	56	53	8	1.800
			13:57	74.00						0.000
5-1	0.33	0.574	13:59	74.63	0.40	715	56	53	8.5	1.670
5-2	0.33	0.574	14:04	76.30	0.40	720	57	54	8.5	1.700
5-3	0.35	0.592	14:09	78.00	0.42	722	56	53	8.5	1.900
5-4	0.30	0.548	14:14	79.90	0.36	721	57	54	8.5	1.450
			14:19	81.35						0.000
6-1	0.43	0.656	14:21	81.70	0.52	718	56	53	10	2.000
6-2	0.33	0.574	14:26	83.70	0.40	720	56	53	10	1.750
6-3	0.33	0.574	14:31	85.45	0.40	720	55	52	10	1.750
6-4	0.34	0.583	14:36	87.20	0.41	722	55	53	10	1.820
			14:41	89.02						0.000
										0.000
										0.000
										0.000
										0.000
										0.000
										0.000
										0.000
										0.000
		0.576		41.940	0.40	720	57	54		#####
							55.00			

ONTARIO HYDRO METHOD TEST SUPPORT DATA

PROJECT NO.:	94403	**TEST RUN NO.:**	1	**TEST DATE:**	11/2/99

CUSTOMER:	Indiana-Kentucky Electric Corporation	**BAROMETRIC PRESSURE (Pb)**	29.28 **in. Hg.**
PLANT:	Clifty Creek Power Plant	**STATIC PRESSURE**	-11.2 **in. H2O**
TEST LOC.:	Unit 6 Precipitator Inlet	**FLUE PRESSURE (Ps)**	28.46 **in. Hg. abs.**
CLIENT:	Electric Power Research Institute	**PROBE LENGTH:**	12 **ft.**
OPERATOR:	J. Platt	**PROBE LINER MATERIAL:**	Glass
CONTROL BOX:	E-26	**NOZZLE IDENTIFICATION NO.:**	Set #1/Nozzle #2
METER NO.:	E-26	**CALIBRATED NOZZLE DIAMETER:**	0.237 **in.**
METER CALIBRATION FACTOR:	1.000	**LEAK CHECK PRE:**	0.000 **POST:** 0.000 @ 16 in. Hg.
PITOT ID NO.:	434A	**DUCT SHAPE:**	Circular DIA. Feet Rectangular 20 Feet 20 Feet
PITOT TUBE COEFFICIENT:	0.830	**DUCT AREA:**	400 **sq. ft.**
PORT LENGTH:	36 in.	**TEST LENGTH:**	120 **min.**
PORT SIZE:	6 in.	**MINUTES PER POINT:**	5
PORT TYPE:	Flange	**TOTAL NUMBER OF TRAVERSE POINTS:**	24

VOLUME METERING SYSTEM FIELD AUDIT

Date: 10-01-99 Name: Rich Russ

EPA Control Module No.: E35 Ambient Temperature: 67 °F

Calibration (Y): 1.002 Barometric Pressure: 29.44 "Hg

Delta H: 1.893

un N 32	Time (Minutes)	Gas Meter Reading/Gas Meter Temperature (Cubic Feet)	Inlet (°F)	Outlet (°F)	Yc (Calculated)
1	0	53.932	70	67	1.016
	10	61.386	72	68	
	Vm=	7.454	Avg.= 69.25	529.25	
2	0	61.386	72	68	1.016
	10	68.849	75	69	
	Vm=	7.463	Avg.= 71.00	531.00	
3	0	68.849	74	69	1.018
	10	76.307	76	69	
	Vm=	7.458	Avg.= 72.00	532.00	

$$Yc = \frac{10}{Vm}\sqrt{\frac{Pbar}{0.0319Tm}}$$

Limit: 0.97Y <Yc< 1.03Y

Limit: 0.972 <Yc< 1.032

$$\text{Calc. Delta H @} = \frac{0.0319\ (\text{Delta H})(Tm)(100)}{Pbar(Y^2)(Vm^2)}$$ (From Calibration Data) = 1.945

METER BOX CALIBRATION

Dry Gas Meter No.	E35	Date:	11-04-99
Standard Meter No.	3623852	Calibrated By:	Rich Russ
Standard Meter (Yr)	1.0058	Barometric Pressure :	29.47

Formula Protection Password: MPA

Run Number		Orifice Setting in H20 Chg (H)	Standard Meter Gas Volume Vr	Dry Meter Gas Volume Vd	Standard Meter Temp. F tr	Dry Gas Meter Inlet Temp. F tdi	Dry Gas Meter Outlet Temp. F tdo	Dry Gas Meter Avg. Temp. F td	Time Min.	Time Sec.	Y	Chg (H@)
Final			81.934	39.345	71	76	73					
Inital			76.877	34.239	70	72	71					
Difference	1	0.20	5.057	5.106	70.5	74	72	73	19	54	0.995	1.758
Final			87.120	44.635	71	78	76					
Inital			82.084	39.515	71	77	73					
Difference	2	0.50	5.036	5.120	71	77.5	74.5	76	12	38	0.992	1.779
Final			71.155	28.476	70	71	70					
Inital			65.949	23.250	70	69	67					
Difference	3	0.70	5.206	5.226	70	70	68.5	69.25	11	15	0.993	1.865
Final			92.362	49.965	71	79	78					
Inital			87.334	44.850	71	78	76					
Difference	4	0.90	5.028	5.115	71	78.5	77	77.75	9	39	0.993	1.869
Final			7.661	65.574	71	78	77					
Inital			2.251	60.056	71	77	77					
Difference	5	1.20	5.410	5.518	71	77.5	77	77.25	9	5	0.989	1.909
Final			76.781	34.024	70	73	72					
Inital			71.521	28.843	70	71	70					
Difference	6	2.00	5.260	5.181	70	72	71	71.5	6	49	1.013	1.908
									Average		0.996	1.848

©MOSTARDI-PLATT ASSOCIATES, INC.

METER BOX CALIBRATION

Dry Gas Meter No.	E35	Date:	10-01-99
Standard Meter No.	677191	Calibrated By:	Rich Russ
Standard Meter (Yr)	0.9991	Barometric Pressure :	29.44

Formula Protection Password: MPA

Run Number		Orifice Setting in H20 Chg (H)	Standard Meter Gas Volume Vr	Dry Meter Gas Volume Vd	Standard Meter Temp. F tr	Dry Gas Meter Inlet Temp. F tdi	Dry Gas Meter Outlet Temp. F tdo	Dry Gas Meter Avg. Temp. F td	Time Min.	Time Sec.	Y	Chg (H@)
Final			54.443	30.322	64	67	66					
Inital			49.258	25.119	63	66	64					
Difference	1	0.20	5.185	5.203	63.5	66.5	65	65.75	20	59	1.000	1.837
Final			66.172	42.053	65	71	67					
Inital			61.156	37.024	64	70	67					
Difference	2	0.50	5.016	5.029	64.5	70.5	67	68.75	12	48	1.004	1.823
Final			49.130	24.988	62	66	63					
Inital			44.090	19.939	62	64	63					
Difference	3	0.70	5.040	5.049	62	65	63	64	10	58	1.000	1.855
Final			71.874	47.771	65	71	67					
Inital			66.421	42.301	65	70	67					
Difference	4	0.90	5.453	5.470	65	70.5	67	68.75	10	35	1.002	1.902
Final			77.311	53.229	65	72	67					
Inital			72.151	48.044	65	71	67					
Difference	5	1.20	5.160	5.185	65	71.5	67	69.25	8	48	1.000	1.956
Final			60.427	36.297	64	71	67					
Inital			55.129	31.010	64	67	66					
Difference	6	2.00	5.298	5.287	64	69	66.5	67.75	7	3	1.004	1.983
									Average		1.002	1.893

83

VOLUME METERING SYSTEM FIELD AUDIT

Date: 10-04-99 Name: Rich Russ

EPA Control Module No.: E26 Ambient Temperature: 64 °F

Calibration (Y): 1 Barometric Pressure: 29.68 "Hg

Delta H: 1.857

#VALUE!

Run No.	Time (Minutes)	Gas Meter Reading/Gas Meter Temperature (Cubic Feet)	Inlet (°F)	Outlet (°F)	Yc (Calculated)
1	0	20.401	74	69	0.994
	10	28.010	77	69	
	Vm=	7.609	Avg.= 72.25	532.25	
2	0	28.010	75	69	1.005
	10	35.540	77	69	
	Vm=	7.530	Avg.= 72.50	532.50	
3	0	35.540	78	70	1.009
	10	43.051	79	70	
	Vm=	7.511	Avg.= 74.25	534.25	

$$Yc = \frac{10}{Vm}\sqrt{\frac{Pbar}{0.0319Tm}}$$

Limit: 0.97Y <Yc< 1.03Y

Limit: 0.970 <Yc< 1.030

$$\text{Calc. Delta H @} = \frac{0.0319\ (\text{Delta H})(Tm)(100)}{Pbar(Y^2)(Vm^2)}$$ (From Calibration Data) = 1.877

METER BOX CALIBRATION

Dry Gas Meter No.	E26	Date:	11-04-99
Standard Meter No.	3623853	Calibrated By:	Rich Russ
Standard Meter (Yr)	0.9943	Barometric Pressure :	29.47

Formula Protection Password: MPA

Run Number		Orifice Setting in H20 Chg (H)	Standard Meter Gas Volume Vr	Dry Meter Gas Volume Vd	Standard Meter Temp. F tr	Dry Gas Meter Inlet Temp. F tdi	Dry Gas Meter Outlet Temp. F tdo	Dry Gas Meter Avg. Temp. F td	Time Min.	Time Sec.	Y	Chg (H@)
Final			77.338	5.320	71	78	74					
Inital			72.310	0.236	70	76	71					
Difference	1	0.20	5.028	5.084	70.5	77	72.5	74.75	19	52	0.996	1.767
Final			82.477	10.529	71	80	76					
Inital			77.464	5.446	71	78	74					
Difference	2	0.50	5.013	5.083	71	79	75	77	13	1	0.996	1.903
Final			66.385	94.260	69	75	69					
Inital			61.070	88.929	68	72	67					
Difference	3	0.70	5.315	5.331	68.5	73.5	68	70.75	11	33	0.999	1.870
Final			87.760	15.880	72	83	77					
Inital			82.712	10.764	71	80	76					
Difference	4	0.90	5.048	5.116	71.5	81.5	76.5	79	9	25	0.998	1.764
Final			103.848	32.312	70	85	80					
Inital			98.570	26.930	70	83	79					
Difference	5	1.20	5.278	5.382	70	84	79.5	81.75	8	42	0.999	1.817
Final			72.173	100.084	70	79	71					
Inital			66.930	94.808	69	75	69					
Difference	6	2.00	5.243	5.276	69.5	77	70	73.5	6	42	0.996	1.845
									Average		0.998	1.828

81

METER BOX CALIBRATION

Dry Gas Meter No.	E26	Date:	10-04-99
Standard Meter No.	3623853	Calibrated By:	Rich Russ
Standard Meter (Yr)	0.9943	Barometric Pressure :	29.68

Formula Protection Password: MPA

Run Number		Orifice Setting in H20 Chg (H)	Standard Meter Gas Volume Vr	Dry Meter Gas Volume Vd	Standard Meter Temp. F tr	Dry Gas Meter Inlet Temp. F tdi	Dry Gas Meter Outlet Temp. F tdo	Dry Gas Meter Avg. Temp. F td	Time Min.	Time Sec.	Y	Chg (H@)
Final			46.597	91.390	70	70	69					
Inital			41.427	86.210	69	70	68					
Difference	1	0.20	5.170	5.180	69.5	70	68.5	69.25	20	51	0.997	1.839
Final			59.559	104.315	72	73	69					
Inital			54.123	98.895	71	73	69					
Difference	2	0.50	5.436	5.420	71.5	73	69	71	14	16	1.001	1.956
Final			41.174	85.953	69	71	68					
Inital			36.147	80.937	69	69	68					
Difference	3	0.70	5.027	5.016	69	70	68	69	11	0	1.000	1.893
Final			64.993	9.732	72	73	69					
Inital			59.822	4.579	72	72	69					
Difference	4	0.90	5.171	5.153	72	72.5	69	70.75	9	32	0.999	1.741
Final			72.774	17.474	71	74	69					
Inital			67.297	12.019	70	73	69					
Difference	5	1.20	5.477	5.455	70.5	73.5	69	71.25	8	57	1.002	1.812
Final			53.745	98.518	71	75	69					
Inital			48.437	93.216	70	72	69					
Difference	6	2.00	5.308	5.302	70.5	73.5	69	71.25	6	53	0.998	1.902
									Average		1.000	1.857

80

©MOSTARDI-PLATT ASSOCIATES, INC.

STACK TEMPERATURE SENSOR CALIBRATION DATA FORM (FOR K-TYPE THERMOCOUPLES)

EPA Control Module Number: E35 Name: Rich Russ

Ambient Temperatu 68 °F Date: 11-04-99

Model 1061; S/N: A20821 Reference Source (T/C Calibrator): Transmation, Inc.

Date of Calibration Verification: 10/18/94

Primary Standards Directly Traceable to
National Institute of Standards and Technology (NIST)

Reference[a] Source Temperature, (°F)	Test Thermometer Temperature, (°F)	Temperature Difference,[b] %
50	48	0.392
100	98	0.357
150	148	0.328
200	199	0.152
250	249	0.141
300	299	0.132
350	349	0.123
400	400	0.000
450	450	0.000
500	500	0.000
550	550	0.000
600	600	0.000
650	650	0.000
700	700	0.000
800	801	0.079
900	901	0.074
1000	1001	0.068
1100	1101	0.064
1200	1201	0.060

[a]Every (50°F) for each reference point.

$$\frac{(\text{Ref. Temp., °F} + 460) - (\text{Test Therm. Temp., °F} + 460)}{\text{Ref. Temp., °F} + 460} * 100 <= 1.5\ \%$$

STACK TEMPERATURE SENSOR CALIBRATION DATA FORM
(FOR K-TYPE THERMOCOUPLES)

EPA Control Module Number: E35 Name: Rich Russ

Ambient Temperatu 62 °F Date: 10-01-99

Model 1061; S/N: A20821 Reference Source (T/C Calibrator): Transmation, Inc.

Date of Calibration Verification: 10/18/94

Primary Standards Directly Traceable to
National Institute of Standards and Technology (NIST)

Reference[a] Source Temperature, (°F)	Test Thermometer Temperature, (°F)	Temperature Difference,[b] %
50	50	0.000
100	98	0.357
150	148	0.328
200	198	0.303
250	248	0.282
300	298	0.263
350	348	0.247
400	398	0.233
450	448	0.220
500	498	0.208
550	549	0.099
600	599	0.094
650	649	0.090
700	699	0.086
800	799	0.079
900	899	0.074
1000	1000	0.000
1100	1100	0.000
1200	1200	0.000

[a]Every (50°F) for each reference point.

$$\frac{(\text{Ref. Temp., °F} + 460) - (\text{Test Therm. Temp., °F} + 460)}{\text{Ref. Temp., °F} + 460} * 100 <= 1.5\ \%$$

STACK TEMPERATURE SENSOR CALIBRATION DATA FORM
(FOR K-TYPE THERMOCOUPLES)

EPA Control Module Number: E26 Name: Rich Russ

Ambient Temperatu 68 °F Date: 11-04-99

Model 1061; S/N: A20821 Reference Source (T/C Calibrator): Transmation, Inc.

Date of Calibration Verification: 10/18/94

Primary Standards Directly Traceable to
National Institute of Standards and Technology (NIST)

Reference[a] Source Temperature, (°F)	Test Thermometer Temperature, (°F)	Temperature Difference,[b] %
50	51	0.196
100	101	0.179
150	151	0.164
200	202	0.303
250	252	0.282
300	302	0.263
350	352	0.247
400	402	0.233
450	451	0.110
500	501	0.104
550	551	0.099
600	602	0.189
650	652	0.180
700	702	0.172
800	802	0.159
900	902	0.147
1000	1002	0.137
1100	1102	0.128
1200	1202	0.120

[a]Every (50°F) for each reference point.

$$\frac{(\text{Ref. Temp., °F} + 460) - (\text{Test Therm. Temp., °F} + 460)}{\text{Ref. Temp., °F} + 460} * 100 <= 1.5\ \%$$

STACK TEMPERATURE SENSOR CALIBRATION DATA FORM
(FOR K-TYPE THERMOCOUPLES)

EPA Control Module Number: E26 Name: Rich Russ

Ambient Temperatu 69 °F Date: 10-04-99

Model 1061; S/N: A20821 Reference Source (T/C Calibrator): Transmation, Inc.

Date of Calibration Verification: 10/18/94

Primary Standards Directly Traceable to
National Institute of Standards and Technology (NIST)

Reference[a] Source Temperature, (°F)	Test Thermometer Temperature, (°F)	Temperature Difference,[b] %
50	52	0.392
100	101	0.179
150	151	0.164
200	203	0.455
250	253	0.423
300	303	0.395
350	352	0.247
400	402	0.233
450	451	0.110
500	501	0.104
550	552	0.198
600	603	0.283
650	653	0.270
700	702	0.172
800	802	0.159
900	901	0.074
1000	1002	0.137
1100	1102	0.128
1200	1202	0.120

[a]Every (50°F) for each reference point.

$$\frac{(\text{Ref. Temp., °F} + 460) - (\text{Test Therm. Temp., °F} + 460)}{\text{Ref. Temp., °F} + 460} * 100 <= 1.5\ \%$$

Nozzle Calibration

Date: 11/2/00

Nozzle ID No.: Set 1

Analyst: AJD

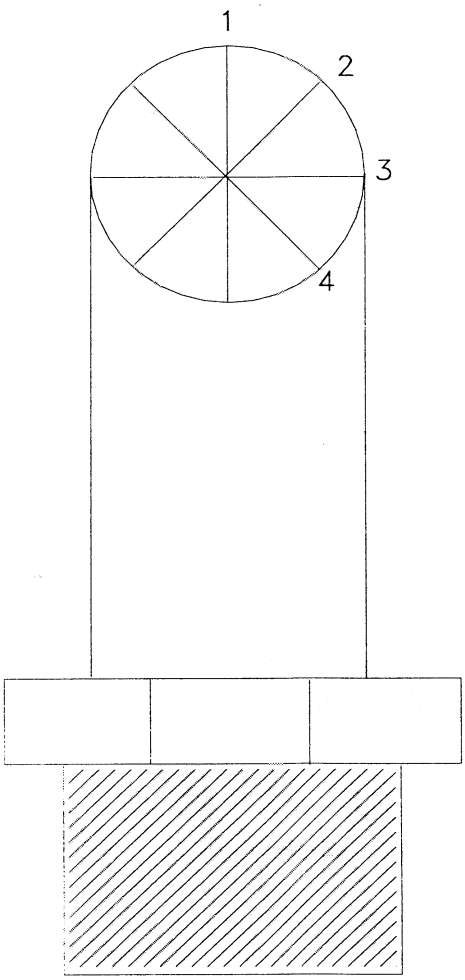

Pre Test		Post Test
0.245	1	√
0.244	2	√
0.245	3	√
0.245	4	√

Average
0.245

DWG-AN2 (indnozzl.xls)

© Mostardi-Platt Associates, Inc.

Nozzle Calibration

Date: 11/2/00

Nozzle ID No.: Set 1 #2

Analyst: AJD

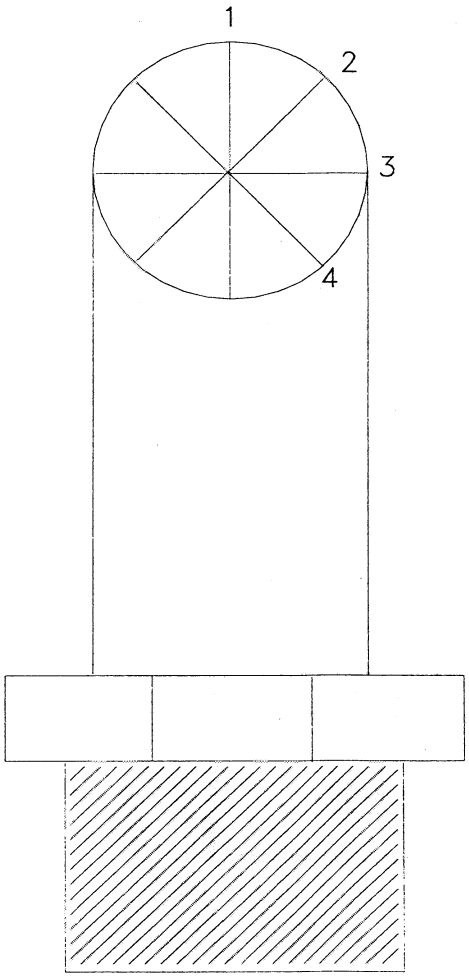

Pre Test		Post Test
0.236	1	√
0.236	2	√
0.237	3	√
0.237	4	√

Average
0.237

© Mostardi-Platt Associates, Inc.

Pitot Tube Calibration Data

Calibration Pitot Tube: Type: HEMI STD Size (OD): 1/4" Pitot ID #: 16018

Type "S" Pitot Tube ID Numbe 420 (1/4") Cp(std) = 0.99

Calibration Date: 12/4/1997 Performed By: M. McIntyre

P_{std}, (in.) H_2O		A-Side Calibration		
Set Value	**Read Value**	**P_s, (in.) H_2O**	**$C_{p(S)}$ [a]**	**DEV.[b]**
0.25	0.27	0.39	0.829	0.000
0.55	0.55	0.78	0.830	0.001
0.85	0.85	1.20	0.831	0.002
1.00	1.05	1.50	0.828	0.001
2.00	2.00	2.85	0.829	0.000
3.00	3.00	4.30	0.827	0.002
		Average	0.829	0.001

P_{std}, (in.) H_2O		B-Side Calibration		
Set Value	**Read Value**	**P_s, (in.) H_2O**	**$C_{p(S)}$ [a]**	**DEV.[b]**
0.25	0.26	0.37	0.830	0.001
0.55	0.55	0.78	0.830	0.001
0.85	0.85	1.20	0.831	0.001
1.00	1.05	1.50	0.828	0.003
2.00	2.00	2.80	0.837	0.005
3.00	3.00	4.25	0.832	0.000
		Average	0.831	0.002

$\overline{C_p}(A) - \overline{C_p}(B) =$ 0.002 (must be ≤ 0.01)

[a] $C_{p(S)} = C_{p(std)}\sqrt{\frac{\Delta P_{std}}{\Delta P_s}}$

[b] $DEV = C_{p(S)} - \overline{C_p}$, (must be ≤ 0.01)

Pitot Tube Calibration Data

Calibration Pitot Tube: Type: HEMI STD Size (OD): 1/4" Pitot ID #: 16018

Type "S" Pitot Tube ID Numbe 434 (1/4") Cp(std) = 0.99

Calibration Date: 12/4/1997 Performed By: M. McIntyre

P_{std}, (in.) H_2O		A-Side Calibration		
Set Value	**Read Value**	**P_s, (in.) H_2O**	**$C_{p(S)}$ [a]**	**DEV.[b]**
0.25	0.27	0.39	0.829	0.001
0.55	0.55	0.78	0.830	0.000
0.85	0.85	1.20	0.831	0.000
1.00	1.05	1.50	0.828	0.002
2.00	2.00	2.80	0.837	0.006
3.00	3.00	4.30	0.827	0.003
		Average	0.830	0.002

P_{std}, (in.) H_2O		B-Side Calibration		
Set Value	**Read Value**	**P_s, (in.) H_2O**	**$C_{p(S)}$ [a]**	**DEV.[b]**
0.25	0.26	0.37	0.830	0.001
0.55	0.55	0.78	0.830	0.001
0.85	0.85	1.20	0.831	0.001
1.00	1.05	1.50	0.828	0.003
2.00	2.00	2.80	0.837	0.005
3.00	3.00	4.25	0.832	0.000
		Average	0.831	0.002

$\overline{C_p}(A) - \overline{C_p}(B) =$ 0.001 (must be $\leq$ 0.01)

[a] $C_{p(S)} = C_{p(std)}\sqrt{\frac{\Delta P_{std}}{\Delta P_s}}$

[b] $DEV = C_{p(S)} - \overline{C_p}$, (must be $\leq$ 0.01)

CALIBRATION PROCEDURES

PITOT TUBES

The pitot tubes used during this test program are fabricated according to the specification described and illustrated in the *Code of Federal Regulations*, Title 40, Part 60, Appendix A, Methods 1 through 5 as published in the *Federal Register*, Volume 42, No. 160; hereafter referred to by the appropriate method number. The pitot tubes comply with the alignment specifications in Method 2, Section 4; and the pitot tube assemblies are in compliance with specifications in the same section.

Pitot tube assemblies are calibrated in accordance with Method 2, Section 4, against a standard hemispherical pitot utilizing a wind tunnel meeting the specification in Method 2, Section 4.1.2.

NOZZLES

The nozzles are measured according to Method 5, Section 5.1.

TEMPERATURE SENSING DEVICES

The potentiometer and thermocouples are calibrated against a mercury thermometer in a calibration well. Alternatively, readings are checked utilizing a NBS traceable millivolt source.

DRY GAS METERS

The test meters are calibrated according to Method 5, Section 5.3 and "Procedures for Calibrating and Using Dry Gas Volume Meters as Calibration Standards" by P.R. Westlin and R.T. Shigehara, March 10, 1978.

ANALYTICAL BALANCE

The accuracy of the analytical balance is checked with Class S, Stainless Steel Type 303 weights manufactured by F. Hopken and Son, Jersey City, New Jersey.

© Mostardi-Platt Associates, Inc.

FIELD TEST DATA SHEET
FOR ISOKINETIC SAMPLING

MOSTARDI-PLATT ASSOCIATES, INC.

PROJECT TKEC
TEST RUN NO. 3
TEST LOCATION Outlet

DATE 10-3-99 PAGE 1 OF 1

Port-Point No.	Velocity Head (P) in. H_2O	$\sqrt{P}$	Clock Time 24 hr.	Meter Volume (Vm) ft^3	1.29 Orifice (H) in. H_2O	Stack Temp (ts) °F	Meter Temp. (t_m) Inlet °F	Meter Temp. (t_m) Outlet °F	.855 Meter Rate cfm	Pump Vacuum in. Hg	×5 Notes		Probe Temp. °F	Filter Holder Temp. °F	Impinger Outlet Temp. °F
1-1	.36	.600	11:15	29.310	.806	332	84	83	.500	5	2.499		248	N/A	48
2	.38	.616	11:20	31.809	.851	332	84	83	.513	5	2.567	31.809	248		48
3	.36	.600	11:25	34.371	.806	332	85	83	.500	5	2.499	34.376	249		48
4	.64	.800	11:30	36.880	1.434	332	86	84	.666	5	3.332	36.875	249		49
5	.66	.812	11:35	40.205	1.478	332	86	84	.677	5	3.384	40.207	249		49
6	.70	.837	11:40	43.590	1.568	332	86	84	.697	5	3.485	43.591	249		49
7	.72	.849	11:45	47.071	1.613	332	86	84	.707	5	3.534	47.076	250		49
8	.70	.837	11:50	50.611	1.568	332	86	84	.697	5	3.485	50.610	250		49
0		.744	11:55	54.090	1.266	332		84.5	.620			54.095			
2-1	.38	.616	12:00	54.090	.851	333	86	84	.513	5	2.567		250		50
2	.44	.663	12:05	56.661	.986	333	86	84	.553	5	2.763	56.662	250		50
3	.44	.663	12:10	59.421	.986	333	86	84	.553	5	2.763	59.425	250		50
4	.68	.825	12:15	62.186	1.523	333	86	84	.687	5	3.435	62.188	250		50
5	.70	.837	12:20	65.622	1.568	333	86	84	.697	5	3.485	65.623	250		50
6	.77	.877	12:25	69.111	1.725	332	86	84	.731	5	3.655	69.108	250		50
7	.79	.889	12:30	72.761	1.770	332	86	84	.740	5	3.702	72.763	250		50
8	.70	.837	12:35	76.465	1.568	332	86	84	.697	5	3.485	76.465	250		50
		.776	12:40	79.955	1.372	332.625		85	.646			79.950			
3-1	.37	.608	12:45	79.955	.829	331	87	85	.507	5	2.533		250		50
2	.46	.678	12:50	82.481	1.030	331	87	85	.565	5	2.825	82.483	250		50
3	.44	.663	12:55	85.306	.986	331	87	85	.553	5	2.763	85.308	250		51
4	.38	.616	13:00	88.071	.851	331	87	85	.513	5	2.567	88.071	250		51
5	.69	.831	13:05	90.638	1.546	330	87	85	.692	5	3.460	90.638	250		51
6	.70	.837	13:10	94.091	1.568	330	87	85	.697	5	3.485	94.098	250		51
7	.82	.906	13:15	97.581	1.837	330	87	86	.754	5	3.772	97.583	250		51
8	.84	.917	13:20	101.349	1.882	330	88	86	.763	5	3.817	101.355	250		51
		.757	13:25	105.169	1.316	330.5		86.188	.631			105.172			
		.759		75.859	1.318	331.708		85.229	.632						

Form 1026 [Rev. 5/27]

© Mostardi-Platt Associates, Inc.

MOSTARDI-PLATT ASSOCIATES, INC.
TEST SUPPORT DATA

TEST RUN NO. 3

COMPANY: TKEC
PLANT: Clifty Creek
TEST LOCATION: Outlet
CLIENT: EPRI
OPERATOR: A. Dickson
DATE: 11-3-99
CONTROL BOX: E35 POT. NO.: E35
METER NO.: E35
METER CALIBRATION FACTOR: 1.002
PITOT ID NO.: 420 B
PITOT TUBE COEFFICIENT: .831
PORT LENGTH: 12 in.
PORT SIZE: 4 in.
PORT TYPE: Nipple

IMPINGER H_2O
FINAL: 4762.2 ml/gm
INITIAL: 4645.8 ml/gm
GAIN: 116.4 ml/gm

SILICA GEL:
FINAL WT: 722.6 gm
INITIAL WT: 705.0 gm
WT. GAIN: 17.6 gm

TOTAL H_2O COLLECTED: 134.0
DESCRIPTION OF IMPINGER H_2O:
SILICA GEL EXHAUSTED?:
IMPINGERS RECOVERED BY:
SILICA GEL WEIGHED BY:

COMMENTS & NOTES

THIMBLE NO: 073 TARE WT:
FILTER NO: TARE WT:
BAROMETRIC PRESSURE in. Hg:
FLUE PRESSURE in. H_2O: -3
FLUE PRESSURE in. Hg ABS:
PROBE LENGTH: 18.5 ft.
PROBE LINER MATERIAL: Teflon
NOZZLE IDENTIFICATION NO:
CALIBRATED NOZZLE DIAMETER: .245
LEAK CHECK: PRE: .003 POST: .003 @ 10/8 in. Hg
DUCT SHAPE: rectangular DIAMETER:
DUCT AREA: 300 sq. ft. L 20 ft W 15 ft
DISTURBANCE UPSTREAM: DOWNSTREAM:
TEST LENGTH: 120 min
MINUTES PER POINT: 5
TOTAL NUMBER OF TRAVERSE POINTS: 24
GAS ANALYSIS (ORSAT/FYRITE):
CO_2: 13.0
O_2: 6.0

PITOT LEAK CHECK: PRE ✓ POST ✓
ΔH@ 1.893
SAMPLES REMOVED FROM SITE BY:

For computer data entry: Supervisor, please complete.
Do you want to enter a fuel analysis? Y ☐ N ☐
What value do you want to use? F = 9,780 F_c = 1,800 Other = _____
Circle to indicate "Yes" or add other value if not given.

PROJECT IKEC
TEST RUN NO. 2
TEST LOCATION Outlet

FIELD TEST DATA SHEET FOR ISOKINETIC SAMPLING

MOSTARDI-PLATT ASSOCIATES, INC

DATE 11-3-99 PAGE 1 OF 1

Port-Point No.	Velocity Head (P) in. H_2O	$\sqrt{P}$	Clock Time 24 hr.	Meter Volume (Vm) ft^3	2.18 Orifice (H) in. H_2O	Stack Temp (t_s) °F	Meter Temp. (t_m) Inlet °F	Meter Temp. (t_m) Outlet °F	.81 Meter Rate cfm	Pump Vacuum in. Hg	+5 Notes		Probe Temp. °F	Filter Holder Temp. °F	Impinger Outlet Temp. °F
1-1	.35	.592	8:00	59.813	.763	332	65	64	.479	5	2.396		248	N/A	45
2	.35	.592	8:05	62.199	.763	332	65	64	.479	5	2.396	62.209	248		45
3	.35	.592	8:10	64.601	.763	332	66	64	.479	5	2.396	64.605	248		46
4	.33	.574	8:15	67.000	.719	331	66	65	.465	5	2.327	67.001	249		46
5	.40	.632	8:20	69.321	.872	331	67	65	.512	5	2.561	69.328	249		47
6	.40	.632	8:25	71.901	.872	331	67	65	.512	5	2.561	71.889	249		48
7	.52	.721	8:30	74.444	1.134	332	68	66	.584	5	2.920	74.450	249		48
8	.81	.900	8:35	77.371	1.766	332	69	67	.729	5	3.645	77.370	249		49
		.654	8:40	81.006	.957	331.625		65.813	.530			81.015			
2-1	.35	.592	8:45	81.006	.763	331	70	68	.479	6	2.396		249		49
2	.37	.608	8:50	83.409	.807	331	71	68	.493	6	2.464	83.411	250		50
3	.35	.592	8:55	85.791	.763	331	71	68	.479	6	2.396	85.875	250		50
4	.42	.648	9:00	88.270	.916	331	72	69	.525	6	2.625	88.271	250		50
5	.78	.883	9:05	90.841	1.700	331	73	70	.715	6	3.577	90.896	250		50
6	.81	.900	9:10	94.469	1.766	330	73	70	.729	6	3.645	94.473	250		50
7	.82	.906	9:15	98.111	1.788	331	74	71	.733	6	3.667	98.118	250		50
8	.65	.806	9:20	101.788	1.417	331	74	71	.650	6	3.265	101.785	250		50
		.742	9:25	105.049	1.24	330.875		70.813	.600			105.050			
3-1	.37	.608	9:30	105.049	.807	331	76	73	.493	6	2.464		250		51
2	.45	.671	9:35	107.511	.981	331	77	74	.543	6	2.717	107.514	250		51
3	.37	.608	9:40	110.229	.807	331	78	74	.493	6	2.464	110.231	250		51
4	.40	.632	9:45	112.692	.872	331	78	74	.512	6	2.561	112.695	250		51
5	.40	.632	9:50	115.260	.872	331	78	74	.512	6	2.561	115.256	250		51
6	.80	.894	9:55	117.817	1.744	331	78	74	.724	6	3.622	117.817	250		51
7	.82	.906	10:00	121.411	1.788	331	78	74	.733	6	3.667	121.439	250		51
8	.80	.894	10:05	125.107	1.744	331	78	74	.724	6	3.622	125.106	250		51
		.731	10:10	128.728	1.202	331		75.75	.592			128.728			
		.709		68.915	1.133	331.161		70.792	.574						

Form 1026 [Rev. 5/27]

MOSTARDI-PLATT ASSOCIATES, INC.
TEST SUPPORT DATA

TEST RUN NO. 2

COMPANY: IKEC
PLANT: Clifty Creek
TEST LOCATION: Outlet
CLIENT: EPRI
OPERATOR: A. Dickson
DATE: 11-3-99
CONTROL BOX: E35 POT. NO.: E35
METER NO.: E35
METER CALIBRATION FACTOR: 1.007
PITOT ID NO.: 420B
PITOT TUBE COEFFICIENT: .831
PORT LENGTH: 12 in.
PORT SIZE: 4 in.
PORT TYPE: Nipple

IMPINGER H_2O
FINAL: 4911.5 ml/gm
INITIAL: 4791.2 ml/gm
GAIN: 120.3 ml/gm

SILICA GEL:
FINAL WT: 802.6 gm
INITIAL WT: 787.4 gm
WT. GAIN: 15.2 gm

TOTAL H_2O COLLECTED: 135.5
DESCRIPTION OF IMPINGER H_2O:
SILICA GEL EXHAUSTED?:
IMPINGERS RECOVERED BY:
SILICA GEL WEIGHED BY:

COMMENTS & NOTES

THIMBLE NO: 077 TARE WT:
FILTER NO: TARE WT:
BAROMETRIC PRESSURE in. Hg:
FLUE PRESSURE in. H_2O: -3
FLUE PRESSURE in. Hg ABS:
PROBE LENGTH: 18.5 ft.
PROBE LINER MATERIAL: Teflon
NOZZLE IDENTIFICATION NO:
CALIBRATED NOZZLE DIAMETER: .245
LEAK CHECK: PRE: .003 POST: .002 @ 10/B in. Hg
DUCT SHAPE: rectangular DIAMETER:
DUCT AREA: 300 sq. ft. L 20 ft W 15 ft.
DISTURBANCE UPSTREAM: DOWNSTREAM:
TEST LENGTH: 120 min
MINUTES PER POINT: 5
TOTAL NUMBER OF TRAVERSE POINTS: 24
GAS ANALYSIS (ORSAT/FYRITE):
CO_2: 13.0
O_2: 6.0

PITOT LEAK CHECK: PRE ✓ POST ✓
ΔH@ 1.893
SAMPLES REMOVED FROM SITE BY:

For computer data entry: Supervisor, please complete.
Do you want to enter a fuel analysis? Y ☐ N ☐
What value do you want to use? F = 9,780 F_c = 1,800 Other = _____
Circle to indicate "Yes" or add other value if not given.

FIELD TEST DATA SHEET
FOR ISOKINETIC SAMPLING

MOSTARDI-PLATT ASSOCIATES, INC.

PROJECT IKEC - Cliffy Creek
TEST RUN NO. 1
TEST LOCATION Outlet

DATE 11-2-99 PAGE 1 OF 1

Port-Point No.	Velocity Head (P) in. H_2O	$\sqrt{P}$	Clock Time 24 hr.	Meter Volume (Vm) ft^3	2.19 Orifice (H) in. H_2O	Stack Temp (ts) °F	Meter Temp. (t_m) Inlet °F	Meter Temp. (t_m) Outlet °F	.816 Meter Rate cfm	Pump Vacuum in. Hg	x5 Notes		Probe Temp. °F	N/A Filter Holder Temp. °F	Impinger Outlet Temp. °F
1-1	.50	.707	13:00	80.001	1.095	336	77	64	.577	4	2.885		251		50
2	.55	.742	13:05	82.888	1.205	336	77	64	.605	5	3.026	82.886	250		50
3	.60	.775	13:10	85.120	1.314	337	72	64	.632	5	3.160	85.118	250		50
4	.75	.866	13:15	88.271	1.643	337	71	63	.707	5	3.533	88.278	250		50
5	.70	.837	13:20	91.809	1.533	340	71	63	.683	5	3.414	91.811	250		51
6	.70	.837	13:25	95.181	1.533	341	70	64	.683	5	3.414	95.225	251		51
7	.75	.866	13:30	98.666	1.643	340	70	66	.707	5	3.533	98.639	248		51
8	1.0	1.000	13:35	102.171	2.190	341	71	67	.816	5	4.080	102.172	250		51
		.829	13:40	106.212	1.520	338.5		68.375	.676			106.252			
2-1	.60	.775	13:45	106.188	1.314	340	73	68	.632	5	3.160		250		50
2	.60	.775	13:50	109.411	1.314	340	75	68	.632	5	3.160	109.412	251		51
3	.74	.860	13:55	112.601	1.621	338	75	68	.702	5	3.510	112.572	251		51
4	.75	.866	14:00	116.071	1.643	337	76	70	.707	5	3.533	116.082	250		51
5	.66	.812	14:05	119.616	1.445	337	76	71	.663	5	3.315	119.615	251		51
6	.66	.812	14:10	122.913	1.445	338	76	71	.663	5	3.315	122.930	251		52
7	.77	.877	14:15	126.171	1.686	336	76	72	.716	5	3.580	126.245	251		52
8	.70	.837	14:20	129.717	1.533	337	77	72	.683	5	3.414	129.825	251		52
		.827	14:25	133.188	1.500	337.875		72.75	.675			133.239			
3-1	.81	.900	14:35	133.179	1.774	336	77	73	.734	5	3.672		251		52
2	.78	.883	14:40	136.898	1.708	336	77	73	.721	5	3.603	136.911	250		52
3	.66	.812	14:45	140.511	1.445	336	77	73	.663	5	3.315	140.514	250		52
4	.55	.742	14:50	143.829	1.205	336	78	73	.605	5	3.026	143.829	250		53
5	.55	.742	14:55	146.861	1.205	337	78	73	.605	5	3.026	146.855	250		53
6	.50	.707	15:00	149.911	1.095	338	78	73	.577	5	2.885	149.881	250		53
7	.50	.707	15:05	152.751	1.095	338	78	74	.577	5	2.885	152.766	250		53
8	.47	.686	15:10	155.655	1.029	338	79	74	.559	5	2.797	155.651	250		53
		.772	15:15	158.448	1.320	336.875		75.5	.630			158.448			
		.809		78.447	1.447	337.75		72.208	.660						

Form 1026 [Rev. 5/27]

© Mostardi-Platt Associates, Inc.

MOSTARDI-PLATT ASSOCIATES, INC.
TEST SUPPORT DATA

TEST RUN NO. 1

COMPANY: TKEL
PLANT: Clifty Creek
TEST LOCATION: Outlet
CLIENT: EPRT
OPERATOR: A. Dickson
DATE: 11-2-99
CONTROL BOX: E35 POT. NO.: E35
METER NO.: E35
METER CALIBRATION FACTOR: 1.002
PITOT ID NO.: 430B
PITOT TUBE COEFFICIENT: .831
PORT LENGTH: 12 in.
PORT SIZE: 4 in.
PORT TYPE: Nipple

IMPINGER H_2O
FINAL: 4743.7 ml/gm
INITIAL: 4609.1 ml/gm
GAIN: 134.6 ml/gm

SILICA GEL:
FINAL WT: 756.2 gm
INITIAL WT: 711.8 gm
WT. GAIN: 44.4 gm

TOTAL H_2O COLLECTED: 179.0
DESCRIPTION OF IMPINGER H_2O:
SILICA GEL EXHAUSTED?:
IMPINGERS RECOVERED BY:
SILICA GEL WEIGHED BY:

COMMENTS & NOTES

THIMBLE NO: 065 TARE WT:
FILTER NO: TARE WT:
BAROMETRIC PRESSURE in. Hg: 29.31
FLUE PRESSURE in. H_2O: -3
FLUE PRESSURE in. Hg ABS: 29.09
PROBE LENGTH: 18.5 ft.
PROBE LINER MATERIAL: Teflon
NOZZLE IDENTIFICATION NO:
CALIBRATED NOZZLE DIAMETER: .245
LEAK CHECK: PRE: .005 POST: .004 @ 10/8 in. Hg
DUCT SHAPE: DIAMETER:
DUCT AREA: 300 sq. ft. L 20 ft W 15 ft
DISTURBANCE UPSTREAM: DOWNSTREAM:
TEST LENGTH: 120 min
MINUTES PER POINT: 5
TOTAL NUMBER OF TRAVERSE POINTS: 24
GAS ANALYSIS (ORSAT/FYRITE):
CO_2: 13
O_2: 6

PITOT LEAK CHECK: PRE ✓ POST ✓
ΔH@ 1.893
SAMPLES REMOVED FROM SITE BY:

For computer data entry: Supervisor, please complete.
Do you want to enter a fuel analysis? Y ☐ N ☐
What value do you want to use? F = 9,780 F_c = 1,800 Other = _____
Circle to indicate "Yes" or add other value if not given.

FIELD TEST DATA SHEET FOR ISOKINETIC SAMPLING

MOSTARDI-PLATT ASSOCIATES, INC.

PROJECT Ikec - Cliffy Creek
TEST RUN NO. 3
TEST LOCATION Unit 6 Inlet

DATE 11/3/99 PAGE 2 OF 2

Port-Point No.	Velocity Head (P) in. H_2O	$\sqrt{P}$	Clock Time 24 hr.	Meter Volume (Vm) ft^3	Orifice (H) in. H_2O	Stack Temp (t_s) °F	Meter Temp. (t_m) Inlet °F	Meter Temp. (t_m) Outlet °F	Meter Rate cfm	Pump Vacuum in. Hg	Notes	Probe Temp. °F	Filter Holder Temp. °F	Impinger Outlet Temp. °F
6-1	0.43	0.656	1303	68.95	0.49	714	51	48	0.38	11.0		252	234	55
2	0.33	0.574	1308	70.80	0.38	720	50	48	0.33		70.85	254	239	55
3	0.36	0.600	1313	72.54	0.41	724	50	48	0.35		72.50	257	239	54
4	0.36	0.600	1318	74.30	0.41	722	51	49	0.35		74.25	256	239	57
			1323	76.00							76.00			

64

Form 1026 [Rev. 5/27]

© Mostardi-Platt Associates, Inc.

FIELD TEST DATA SHEET FOR ISOKINETIC SAMPLING

MOSTARDI-PLATT ASSOCIATES, INC.

PROJECT IKEC - Clifty Creek

TEST RUN NO. 3

TEST LOCATION Unit 6 Inlet

DATE 11/3/99 PAGE 1 OF 2

Port-Point No.	Velocity Head (P) in. H_2O	$\sqrt{P}$	Clock Time 24 hr.	Meter Volume (Vm) ft^3	Orifice (H) in. H_2O (1.15)	Stack Temp (t_s) °F	Meter Temp. (t_m) Inlet °F	Meter Temp. (t_m) Outlet °F	Meter Rate cfm (0.58)	Pump Vacuum in. Hg	Notes	Probe Temp. °F	Filter Holder Temp. °F	Impinger Outlet Temp. °F
1-1	0.36	0.600	1115	33.88	0.41	724	43	42	0.35	5.0		250	235	50
2	0.32	0.566	1120	35.67	0.37	729	44	42	0.33		35.63	255	234	48
3	0.30	0.548	1125	37.28	0.35	729	45	42	0.32		37.28	258	234	48
4	0.35	0.592	1130	38.77	0.40	730	46	43	0.34		38.88	257	230	48
	(-0.30)		1135	40.45							40.58			
2-1	0.36	0.600	1137	40.95	0.41	720	47	44	0.35	6.0		252	240	50
2	0.32	0.566	1142	42.40	0.37	726	47	44	0.33		42.50	253	238	45
3	0.32	0.566	1147	44.05	0.37	727	48	44	0.33		44.15	257	238	47
4	0.30	0.548	1152	45.75	0.35	718	48	44	0.32		45.80	258	238	49
	(-0.35)		1157	47.35							47.40			
3-1	0.37	0.608	1159	47.70	0.40	720	49	45	0.35	7.5		252	238	50
2	0.30	0.548	1204	49.40	0.35	715	49	45	0.32		49.45	255	235	49
3	0.30	0.548	1209	51.00	0.35	715	50	46	0.32		51.05	259	239	51
4	0.33	0.574	1214	52.60	0.38	714	50	46	0.33		52.65	257	238	51
			1219	54.28							54.30			
4-1	0.40	0.632	1221	54.56	0.46	715	50	46	0.37	9.5		250	238	50
2	0.35	0.592	1226	56.40	0.40	714	50	47	0.34		56.41	256	238	52
3	0.30	0.548	1231	58.10	0.35	716	50	47	0.32		58.11	257	238	52
4	0.30	0.548	1236	59.80	0.35	715	50	47	0.32		59.71	258	238	54
	(-0.30)		1241	61.45							61.31			
5-1	0.35	0.592	1242	61.75	0.40	715	50	47	0.34	10.0		251	238	53
2	0.37	0.608	1247	63.40	0.42	718	50	48	0.35		63.45	254	236	50
3	0.37	0.608	1252	65.25	0.42	719	50	48	0.35		65.20	257	238	52
4	0.35	0.592	1257	67.00	0.40	720	50	48	0.34		66.95	257	238	53
	(-0.30)		1302	68.65							68.65			

MOSTARDI-PLATT ASSOCIATES, INC.
TEST SUPPORT DATA

TEST RUN NO. 3

COMPANY: INDIANA KENTUCKY ELECTRIC CO
PLANT: CLIFTY CREEK
TEST LOCATION: UNIT 6 INLET
CLIENT: EPRI
OPERATOR: JNP
DATE: 11/3/99
CONTROL BOX: E-26 POT. NO.: E-26
METER NO.: E-26
METER CALIBRATION FACTOR: 1.000
PITOT ID NO.: 434A
PITOT TUBE COEFFICIENT: 0.830
PORT LENGTH: 36 in.
PORT SIZE: 6 in.
PORT TYPE: FLANGE

IMPINGER H_2O
FINAL: 4614.6 ml/gm
INITIAL: 4512.5 ml/gm
GAIN: 102.1 ml/gm

SILICA GEL:
FINAL WT: 754.4 gm
INITIAL WT: 743.1 gm
WT. GAIN: 11.3 gm

TOTAL H_2O COLLECTED: 113.4
DESCRIPTION OF IMPINGER H_2O:
SILICA GEL EXHAUSTED?:
IMPINGERS RECOVERED BY:
SILICA GEL WEIGHED BY:

COMMENTS & NOTES

THIMBLE NO: TARE WT:
FILTER NO: TARE WT:
BAROMETRIC PRESSURE in. Hg: 29.32
FLUE PRESSURE in. H_2O: -11.4
FLUE PRESSURE in. Hg ABS: 28.48
PROBE LENGTH: 12 ft.
PROBE LINER MATERIAL: GLASS
NOZZLE IDENTIFICATION NO: SET #1 NOZZLE #2
CALIBRATED NOZZLE DIAMETER: 0.237
LEAK CHECK: PRE: 0.00 POST: @ 13 in. Hg
DUCT SHAPE: SQUARE DIAMETER:
DUCT AREA: 400.00 sq. ft. L 20' W 20'
DISTURBANCE UPSTREAM: DOWNSTREAM:
TEST LENGTH: 120 min
MINUTES PER POINT: 5
TOTAL NUMBER OF TRAVERSE POINTS: 24
GAS ANALYSIS (ORSAT/FYRITE):
CO_2: 15.0 15.0 15.0
O_2: 3.7 3.7 3.7

PITOT LEAK CHECK: PRE ✓ POST ✓
ΔH@
SAMPLES REMOVED FROM SITE BY: JNP / JW

For computer data entry: Supervisor, please complete.
Do you want to enter a fuel analysis? Y ☐ N ☐
What value do you want to use? F_r = 9,780 F_c = 1,800 Other = _____
Circle to indicate "Yes" or add other value if not given.

© Mostardi-Platt Associates, Inc.

FIELD TEST DATA SHEET
FOR ISOKINETIC SAMPLING

MOSTARDI-PLATT ASSOCIATES, INC.

PROJECT Ikec - CHFM Cranesville
TEST RUN NO. 2
TEST LOCATION Inlet

DATE 11/3/99 PAGE 2 OF 2

Port-Point No.	Velocity Head (P) in. H_2O	$\sqrt{P}$	Clock Time 24 hr.	Meter Volume (Vm) ft^3	Orifice (H) in. H_2O	Stack Temp (t_s) °F	Meter Temp. (t_m) Inlet °F	Meter Temp. (t_m) Outlet °F	Meter Rate cfm	Pump Vacuum in. Hg	Notes	Probe Temp. °F	Filter Holder Temp. °F	Impinger Outlet Temp. °F
61	0.43	0.656	0950	125.43	0.49	720	42	39	0.38	10.0		257	233	49
2	0.33	0.574	0955	127.30	0.38	721	42	39	0.33		127.37	255	233	50
3	0.33	0.574	1000	128.93	0.38	723	43	40	0.37		128.98	257	234	50
4	0.35	0.592	1005	130.53	0.40	725	44	40	0.34		130.63	257	233	50
			1010	132.24							132.33			

© Mostardi-Platt Associates, Inc.

FIELD TEST DATA SHEET
FOR ISOKINETIC SAMPLING

MOSTARDI-PLATT ASSOCIATES, INC.

PROJECT IVEC - CLIFFY Creek 6
TEST RUN NO. 2
TEST LOCATION Iowa

DATE 11/3/99 PAGE 1 OF 2

Port-Point No.	Velocity Head (P) in. H_2O	$\sqrt{P}$	Clock Time 24 hr.	Meter Volume (Vm) ft^3	1.15 Orifice (H) in. H_2O	Stack Temp (t_s) °F	Meter Temp. (t_m) Inlet °F	Meter Temp. (t_m) Outlet °F	0.58 Meter Rate cfm	Pump Vacuum in. Hg	Notes	Probe Temp. °F	Filter Holder Temp. °F	Impinger Outlet Temp. °F
1-1	0.34	0.583	0800	90.31	0.39	718	34	32	0.34	5.0		250	235	51
2	0.33	0.574	0805	92.00	0.38	724	35	33	0.33		92.01	255	235	50
3	0.30	0.548	0810	93.70	0.34	723	36	33	0.32		93.66	258	232	50
4	0.33	0.574	0815	95.33	0.38	725	37	34	0.33		95.26	258	230	49
	-0.20		0820	96.97							96.91			
2-1	0.36	0.600	0822	97.17	0.41	720	38	34	0.35	5.0		249	230	49
2	0.33	0.574	0827	98.80	0.38	727	38	35	0.33		98.97	254	232	48
3	0.30	0.548	0832	100.40	0.35	728	40	35	0.32		100.57	259	233	49
4	0.35	0.592	0837	102.00	0.40	728	40	36	0.34		102.17	259	232	48
	-0.25		0842	103.80							103.87			
3-1	0.36	0.600	0844	104.05	0.41	720	40	36	0.35	6.5		251	234	48
2	0.35	0.592	0849	105.75	0.40	728	40	36	0.34		105.80	257	232	47
3	0.30	0.548	0854	107.45	0.35	732	40	36	0.32		107.50	258	233	47
4	0.33	0.574	0859	109.05	0.38	732	40	37	0.33		109.10	258	232	47
	-0.17		0904	110.68							110.75			
4-1	0.45	0.671	0906	110.85	0.52	724	41	37	0.39	8.0		250	233	48
2	0.39	0.624	0911	112.80	0.45	728	41	37	0.36		112.80	255	233	48
3	0.30	0.548	0916	114.60	0.35	726	41	38	0.32		114.60	258	231	48
4	0.30	0.548	0921	116.23	0.35	726	41	38	0.32		116.20	258	233	48
	-0.28		0926	117.80							117.80			
5-1	0.36	0.600	0928	118.08	0.41	721	41	38	0.35	8.0		251	230	49
2	0.36	0.600	0933	119.80	0.41	726	41	38	0.35		119.83	255	230	49
3	0.35	0.592	0938	121.49	0.40	725	41	38	0.34		121.58	257	230	48
4	0.35	0.592	0943	123.24	0.40	725	42	39	0.34		123.28	258	230	48
			0948	125.00							124.98			

© Mostardi-Platt Associates, Inc.

MOSTARDI-PLATT ASSOCIATES, INC.
TEST SUPPORT DATA

TEST RUN NO. 2

COMPANY: Indiana-Kentucky Electric Co.
PLANT: Clifty Creek
TEST LOCATION: Unit 6 Inlet
CLIENT: EPRI
OPERATOR: JRP
DATE: 11/3/99
CONTROL BOX: E-26 POT. NO.: E-26
METER NO.: E-26
METER CALIBRATION FACTOR: 1.000
PITOT ID NO.: 434A
PITOT TUBE COEFFICIENT: 0.830
PORT LENGTH: 36 in.
PORT SIZE: 6 in.
PORT TYPE: Flange

IMPINGER H_2O
FINAL: 4837.5 ml/gm
INITIAL: 4728.5 ml/gm
GAIN: 109.0 ml/gm

SILICA GEL:
FINAL WT: 776.5 gm
INITIAL WT: 767.7 gm
WT. GAIN: 8.8 gm

TOTAL H_2O COLLECTED: 117.8
DESCRIPTION OF IMPINGER H_2O:
SILICA GEL EXHAUSTED?:
IMPINGERS RECOVERED BY:
SILICA GEL WEIGHED BY:

COMMENTS & NOTES

THIMBLE NO: 074 TARE WT:
FILTER NO: — TARE WT: —
BAROMETRIC PRESSURE in. Hg: 29.32
FLUE PRESSURE in. H_2O: -11.4
FLUE PRESSURE in. Hg ABS: 28.48
PROBE LENGTH: 12 ft.
PROBE LINER MATERIAL: Glass
NOZZLE IDENTIFICATION NO: Set #1 Nozzle #2
CALIBRATED NOZZLE DIAMETER: 0.237
LEAK CHECK: PRE: 0.00 POST: 0.00 @ 12/15 in. Hg
DUCT SHAPE: Square DIAMETER: —
DUCT AREA: 400.00 sq. ft. L 20' W 20'
DISTURBANCE UPSTREAM: DOWNSTREAM:
TEST LENGTH: 120 min
MINUTES PER POINT: 5
TOTAL NUMBER OF TRAVERSE POINTS: 24
GAS ANALYSIS (ORSAT/FYRITE):
CO_2: 15.0 15.0 15.0
O_2: 3.8 3.8 3.8

PITOT LEAK CHECK: PRE ✓ POST ✓
ΔH@
SAMPLES REMOVED FROM SITE BY: JRP/GW

For computer data entry: Supervisor, please complete.
Do you want to enter a fuel analysis? Y ☐ N ☐
What value do you want to use? F_c = 9,780 F_c = 1,800 Other = _____
Circle to indicate "Yes" or add other value if not given.

FIELD TEST DATA SHEET FOR ISOKINETIC SAMPLING

MOSTARDI-PLATT ASSOCIATES, INC.

PROJECT IKEC - Flatty Creek
TEST RUN NO. 1
TEST LOCATION UNIT 6 INLET

DATE 11/2/99 PAGE 2 OF 2

Port-Point No.	Velocity Head (P) in. H_2O	$\sqrt{P}$	Clock Time 24 hr.	Meter Volume (Vm) ft^3	Orifice (H) in. H_2O	Stack Temp (t_s) °F	Meter Temp. (t_m) Inlet °F	Meter Temp. (t_m) Outlet °F	Meter Rate cfm	Pump Vacuum in. Hg	Notes	Probe Temp. °F	Filter Holder Temp. °F	Impinger Outlet Temp. °F
6-1	0.43	0.656	1421	81.70	0.52	718	56	53	0.40	10.0		241	230	50
2	0.33	0.574	1426	83.70	0.40	720	56	53	0.35		83.70	245	230	50
3	0.33	0.574	1431	85.45	0.40	720	55	52	0.35		85.45	243	229	50
4	0.34	0.583	1436	87.20	0.41	722	55	53	0.35		87.20	248	228	51
			1441	89.02							88.95			
				-44.34										
				44.68										
				-2.74										
5														
8														
		13.829			9.61	17275	26	40						
		0.5762		41.94	0.400	719.8	55							
						1179.8	5.5							

Form 1026 [Rev. 5/27]

© Mostardi-Platt Associates, Inc.

FIELD TEST DATA SHEET FOR ISOKINETIC SAMPLING

MOSTARDI-PLATT ASSOCIATES, INC.

PROJECT IKEL - CLIFTY CREEK
TEST RUN NO. 1
TEST LOCATION UNIT 6 INLET

DATE 11/2/99 PAGE 1 OF 2

Port-Point No.	Velocity Head (P) in. H_2O	$\sqrt{P}$	Clock Time 24 hr.	Meter Volume (Vm) ft^3	1.203 Orifice (H) in. H_2O	Stack Temp (t_s) °F	Meter Temp. (t_m) Inlet °F	Meter Temp. (t_m) Outlet °F	0.604 Meter Rate cfm	Pump Vacuum in. Hg	Notes	Probe Temp. °F	Filter Holder Temp. °F	Impinger Outlet Temp. °F
1-1	0.34	0.583	1230	44.34	0.41	723	53	52	0.35	1.0		240	230	51
2	0.30	0.548	1235	46.00	0.36	720	55	53	0.33		46.09	245	230	50
3	0.30	0.548	1240	47.50	0.36	723	56	53	0.33		47.74	249	230	48
4	0.33	0.574	1245	49.30	0.40	720	57	53	0.35		49.39	248	230	50
	-0.66		1250	51.05							51.14			
2-1	0.35	0.592	1253	51.71	0.42	720	57	54	0.35	4.0		240	230	49
2	0.31	0.557	1258	53.35	0.37	720	58	54	0.34		53.46	246	231	49
3	0.30	0.548	1303	55.25	0.36	721	59	54	0.33		55.16	249	230	50
4	0.30	0.548	1308	56.90	0.36	720	59	55	0.33		56.81	246	230	49
5	-0.70		1313	58.60							58.46			
3-1	0.39	0.624	1315	59.30	0.47	715	58	54	0.38	6.0		240	230	48
2	0.32	0.566	1320	61.10	0.38	715	59	55	0.34		61.20	243	229	47
3	0.30	0.548	1325	62.85	0.36	720	57	54	0.33		62.90	248	229	48
4	0.32	0.566	1330	64.50	0.38	720	56	54	0.34		64.55	248	229	49
	-0.40		1335	66.30							66.25			
4-1	0.43	0.656	1337	66.70	0.52	718	56	54	0.40	8.0		241	230	51
2	0.36	0.600	1342	68.65	0.43	718	56	54	0.36		68.70	245	229	49
3	0.30	0.548	1347	70.50	0.36	719	56	53	0.33		70.50	249	230	50
4	0.30	0.548	1352	72.20	0.36	719	56	53	0.33		72.15	247	230	50
	-0.63		1357	74.00							73.80			
5-1	0.33	0.574	1359	74.63	0.40	715	56	53	0.35	8.5		240	230	51
2	0.33	0.574	1404	76.30	0.40	720	57	54	0.35		76.38	243	230	50
3	0.35	0.592	1409	78.00	0.42	722	56	53	0.36		78.13	247	230	50
4	0.30	0.548	1414	79.90	0.36	721	57	54	0.33		79.93	247	230	50
	-0.35		1419	81.35							81.58			

MOSTARDI-PLATT ASSOCIATES, INC.
TEST SUPPORT DATA

TEST RUN NO. 1

COMPANY: INDIANA KENTUCKY ELECTRIC CORP.
PLANT: CLIFTY CREEK POWER PLANT
TEST LOCATION: UNIT 6 FRONT INLET
CLIENT: EPRI (Electric Power Research Institute)
OPERATOR: JMP
DATE: 11/2/99
CONTROL BOX: E26 POT. NO.: E26
METER NO.: E26
METER CALIBRATION FACTOR: 1.000
PITOT ID NO.: 434A
PITOT TUBE COEFFICIENT: 0.830
PORT LENGTH: 36 in.
PORT SIZE: 6 in.
PORT TYPE: FLANGE

IMPINGER H_2O
FINAL: 4819.8 ml/gm
INITIAL: 4707.8 ml/gm
GAIN: 112.0 ml/gm

SILICA GEL:
FINAL WT: 702.2 gm
INITIAL WT: 692.1 gm
WT. GAIN: 10.1 gm

TOTAL H_2O COLLECTED: 122.1
DESCRIPTION OF IMPINGER H_2O:
SILICA GEL EXHAUSTED?:
IMPINGERS RECOVERED BY:
SILICA GEL WEIGHED BY:

COMMENTS & NOTES

THIMBLE NO: 059 TARE WT:
FILTER NO: TARE WT:
BAROMETRIC PRESSURE in. Hg: 29.28
FLUE PRESSURE in. H_2O: -11.2
FLUE PRESSURE in. Hg ABS: 28.46
PROBE LENGTH: 12 ft.
PROBE LINER MATERIAL: GLASS
NOZZLE IDENTIFICATION NO: SET #1 NOZZLE #2
CALIBRATED NOZZLE DIAMETER: 0.237
LEAK CHECK: PRE: 0.00 POST: 0.00 @ 14/16 in. Hg
DUCT SHAPE: SQUARE DIAMETER:
DUCT AREA: 400.00 sq. ft. L 20' W 20
DISTURBANCE UPSTREAM: DOWNSTREAM:
TEST LENGTH: 120 min
MINUTES PER POINT: 5
TOTAL NUMBER OF TRAVERSE POINTS: 24
GAS ANALYSIS (ORSAT/FYRITE):
CO_2: 14.8 14.8
O_2: 3.9 3.9

PITOT LEAK CHECK: PRE POST
ΔH@
SAMPLES REMOVED FROM SITE BY:

For computer data entry: Supervisor, please complete.
Do you want to enter a fuel analysis? Y ☐ N ☐
What value do you want to use? F = 9,780 F_c = 1,800 Other = _____
Circle to indicate "Yes" or add other value if not given.

© Mostardi-Platt Associates, Inc.

ONTARIO HYDRO METHOD TEST SUPPORT DATA

PROJECT NO.:	94403	**TEST RUN NO.:**	2	**TEST DATE:**	11/3/99

CUSTOMER:	Indiana-Kentucky Electric Corporation	**BAROMETRIC PRESSURE (Pb)**	29.31	**in. Hg.**	
PLANT:	Clifty Creek Power Plant	**STATIC PRESSURE**	-3	**in. H2O**	
TEST LOC.:	Unit 6 Precipitator Outlet	**FLUE PRESSURE (Ps)**	29.09	**in. Hg. abs.**	
CLIENT:	Electric Power Research Institute	**PROBE LENGTH:**	18.5	**ft.**	
OPERATOR:	A. Dickson	**PROBE LINER MATERIAL:**	Teflon		
CONTROL BOX:	E-35	**NOZZLE IDENTIFICATION NO.:**	N/A		
METER NO.:	E-35	**CALIBRATED NOZZLE DIAMETER:**	0.245	**in.**	
METER CALIBRATION FACTOR:	1.002	**LEAK CHECK PRE:**	0.003	**POST:**	0.002 @ 8 in. Hg.
PITOT ID NO.:	420B	**DUCT SHAPE:**	Circular DIA.		Feet
			Rectangular	20 Feet	15 Feet
PITOT TUBE COEFFICIENT:	0.831	**DUCT AREA:**	300	**sq. ft.**	
PORT LENGTH:	12 in.	**TEST LENGTH:**	120	**min.**	
PORT SIZE:	4 in.	**MINUTES PER POINT:**	5		
PORT TYPE:	Nipple	**TOTAL NUMBER OF TRAVERSE POINTS:**	24		

Mostardi Platt

ONTARIO HYDRO METHOD TRAVERSE DATA

Company: Indiana-Kentucky Electric Corporation **Date:** 11/3/99 **Test Run:** 2

Location: Unit 6 Precipitator Outlet

Point	Δp	Sq. Root Δp	Time	Volume cubic feet	ΔH	Stack Temp °F	Meter Inlet °F	Meter Outlet °F	Vacuum in. Hg	
1-1	0.35	0.592	8:00	59.81	0.76	332	65	64	5	2.386
1-2	0.35	0.592	8:05	62.20	0.76	332	65	64	5	2.402
1-3	0.35	0.592	8:10	64.60	0.76	332	66	64	5	2.399
1-4	0.33	0.574	8:15	67.00	0.72	331	66	65	5	2.321
1-5	0.40	0.632	8:20	69.32	0.87	331	67	65	5	2.580
1-6	0.40	0.632	8:25	71.90	0.87	331	67	65	5	2.543
1-7	0.52	0.721	8:30	74.44	1.13	332	68	66	5	2.927
1-8	0.81	0.900	8:35	77.37	1.77	332	69	67	5	3.635
			8:40	81.01						0.000
2-1	0.35	0.592	8:45	81.01	0.76	331	70	68	6	2.403
2-2	0.37	0.608	8:50	83.41	0.81	331	71	68	6	2.382
2-3	0.35	0.592	8:55	85.79	0.76	331	71	68	6	2.479
2-4	0.42	0.648	9:00	88.27	0.92	331	72	69	6	2.621
2-5	0.78	0.883	9:05	90.89	1.70	331	73	70	6	3.578
2-6	0.81	0.900	9:10	94.47	1.77	330	73	70	6	3.642
2-7	0.82	0.906	9:15	98.11	1.79	331	74	71	6	3.677
2-8	0.65	0.806	9:20	101.79	1.42	331	74	71	6	3.261
			9:25	105.05						0.000
3-1	0.37	0.608	9:30	105.05	0.81	331	76	73	6	2.462
3-2	0.45	0.671	9:35	107.51	0.98	331	77	74	6	2.718
3-3	0.37	0.608	9:40	110.23	0.81	331	78	74	6	2.463
3-4	0.40	0.632	9:45	112.69	0.87	331	78	74	6	2.568
3-5	0.40	0.632	9:50	115.26	0.87	331	78	74	6	2.557
3-6	0.80	0.894	9:55	117.82	1.74	331	78	74	6	3.594
3-7	0.82	0.906	10:00	121.41	1.79	331	78	74	6	3.696
3-8	0.80	0.894	10:05	125.11	1.74	331	78	74	6	3.621
			10:10	128.73						0.000
										0.000
										0.000
										0.000
										0.000
										0.000
										0.000
										0.000
										0.000
										0.000
										0.000
										0.000
		0.709		68.915	1.13	331	72	69		#####
							70.79			

MOISTURE, DILUENT AND MERCURY DATA

Company Indiana-Kentucky Electric Corpor **Date:** 11/3/99 **Test Run:** 2

Location: Unit 6 Precipitator Outlet

SILICA GEL FINAL WT.:	802.60	**grams**
SILICA GEL INITIAL WT.:	787.40	**grams**
DIFFERENCE:	15.20	
FINAL IMPINGER WATER:	4911.50	**mls.**
INITIAL IMPINGER WATER:	4791.20	**mls.**
DIFFERENCE:	120.30	
TOTAL WATER GAIN:	135.50	

ITEM	MERCURY (UG)		= NET WT. (G)
FILTER:	0.005		0.000000005
PROBE WASH:	0.000		0.000000000
		Particle-bound Total:	0.000000005
KCl:	8.026		0.000008026
		Oxidized Total:	0.000008026
HNO_3/H_2O_2:	0.769		0.000000769
$KMNO_4$:	7.736		0.000007736
		Elemental Total:	0.000008505

Orsat Analysis	1	2	3	Average
Carbon Dioxide:	13.00			13.00
Oxygen:	6.00			6.00

ONTARIO HYDRO METHOD DATA ENTRY FORM

Field Data/Calculated Data

Company:	Indiana-Kentucky Electric Corporation
Date:	11/3/99
Test Run:	2
Stack or Duct No.:	Unit 6 Precipitator Outlet
Start Time:	8:00
Stop Time:	10:10

Pb:	29.31	Inches Hg
Static	-3.00	Inches H2O
Ps:	29.09	Inches Hg Abs.
Vlc:	136	ml + grams
Mn:	0.0000	gm
Test Time:	120	minutes
% O2:	6.00	%
% CO2:	13.00	%
% N2:	81.00	%
Delta H:	1.13	Inches H20
Cp:	0.831	Dimensionless - pitot
Tm:	70.79	°F
Sqrt P:	0.709	Inches H20
Ts:	331.17	°F
Vm:	68.915	Cubic Feet
Dn:	0.245	Inches - nozzle
As:	300.00	Sq. Feet
Yd:	1.002	Mcf
CF:	N/A	Process tons/hr
Heat Input:	N/A	MM BTU/hr
Fd:	N/A	dscf/10^6 Btu
Fc:	N/A	scf/10^6 Btu

Vmstd:	67.480	cubic feet (dry)
Vwstd:	6.382	cubic feet (wet)
Bwo:	0.086	
Md:	30.320	lb/lb-mole (dry)
Ms:	29.255	lb/lb-mole (wet)
Excess Air (%)	39.002	
Vs:	48.567	fps
ACFM:	874199.	
DSCFM:	518205.	
WSCFM:	567216	
%I:	99.5	isokinetic variance
GR/ACF:	---	
GR/DSCF:	---	
lbs/hr	---	
lbs/ton prod.:	N/A	
lbs/MM BTU:	N/A	Heat Input
lbs/MM BTU:	N/A	O2 Basis
lbs/MM BTU:	N/A	CO2 Basis

ONTARIO HYDRO METHOD TEST SUPPORT DATA

PROJECT NO.: 94403 **TEST RUN NO.:** 3 **TEST DATE:** 11/3/99

CUSTOMER:	Indiana-Kentucky Electric Corporation	**BAROMETRIC PRESSURE (Pb)**	29.31	**in. Hg.**	
PLANT:	Clifty Creek Power Plant	**STATIC PRESSURE**	-3	**in. H2O**	
TEST LOC.:	Unit 6 Precipitator Outlet	**FLUE PRESSURE (Ps)**	29.09	**in. Hg. abs.**	
CLIENT:	Electric Power Research Institute	**PROBE LENGTH:**	18.5	**ft.**	
OPERATOR:	A. Dickson	**PROBE LINER MATERIAL:**	Teflon		
CONTROL BOX:	E-35	**NOZZLE IDENTIFICATION NO.:**	N/A		
METER NO.:	E-35	**CALIBRATED NOZZLE DIAMETER:**	0.245	**in.**	
METER CALIBRATION FACTOR:	1.002	**LEAK CHECK PRE:**	0.003	**POST:**	0.003 @ 8 in. Hg.
PITOT ID NO.:	420B	**DUCT SHAPE:**	Circular DIA.		Feet
			Rectangular	20 Feet	15 Feet
PITOT TUBE COEFFICIENT:	0.831	**DUCT AREA:**	300	**sq. ft.**	
PORT LENGTH:	12 in.	**TEST LENGTH:**	120	**min.**	
PORT SIZE:	4 in.	**MINUTES PER POINT:**	5		
PORT TYPE:	Nipple	**TOTAL NUMBER OF TRAVERSE POINTS:**		24	

ONTARIO HYDRO METHOD TRAVERSE DATA

Company: Indiana-Kentucky Electric Corporation **Date:** 11/3/99 **Test Run:** 3

Location: Unit 6 Precipitator Outlet

Point	Δp	Sq. Root Δp	Time	Volume cubic feet	ΔH	Stack Temp °F	Meter Inlet °F	Meter Outlet °F	Vacuum in. Hg	
1-1	0.36	0.600	11:15	29.31	0.81	332	84	83	5	2.499
1-2	0.38	0.616	11:20	31.81	0.85	332	84	83	5	2.562
1-3	0.36	0.600	11:25	34.37	0.81	332	85	83	5	2.509
1-4	0.64	0.800	11:30	36.88	1.43	332	86	84	5	3.325
1-5	0.66	0.812	11:35	40.21	1.48	332	86	84	5	3.385
1-6	0.70	0.837	11:40	43.59	1.57	332	86	84	5	3.481
1-7	0.72	0.849	11:45	47.07	1.61	332	86	84	5	3.540
1-8	0.70	0.837	11:50	50.61	1.57	332	86	84	5	3.479
			11:55	54.09						0.000
2-1	0.38	0.616	12:00	54.09	0.85	333	86	84	5	2.571
2-2	0.44	0.663	12:05	56.66	0.99	333	86	84	5	2.760
2-3	0.44	0.663	12:10	59.42	0.99	333	86	84	5	2.765
2-4	0.68	0.825	12:15	62.19	1.52	333	86	84	5	3.436
2-5	0.70	0.837	12:20	65.62	1.57	333	86	84	5	3.489
2-6	0.77	0.877	12:25	69.11	1.73	332	86	84	5	3.650
2-7	0.79	0.889	12:30	72.76	1.77	332	86	84	5	3.704
2-8	0.70	0.837	12:35	76.47	1.57	332	86	84	5	3.490
			12:40	79.96						0.000
3-1	0.37	0.608	12:45	79.96	0.83	331	87	85	5	2.526
3-2	0.46	0.678	12:50	82.48	1.03	331	87	85	5	2.825
3-3	0.44	0.663	12:55	85.31	0.99	331	87	85	5	2.765
3-4	0.38	0.616	13:00	88.07	0.85	331	87	85	5	2.567
3-5	0.69	0.831	13:05	90.64	1.55	330	87	85	5	3.453
3-6	0.70	0.837	13:10	94.09	1.57	330	87	85	5	3.490
3-7	0.82	0.906	13:15	97.58	1.84	330	87	86	5	3.768
3-8	0.84	0.917	13:20	101.35	1.88	330	88	86	5	3.820
			13:25	105.17						0.000
										0.000
										0.000
										0.000
										0.000
										0.000
										0.000
										0.000
										0.000
										0.000
										0.000
										0.000
		0.759		75.859	1.32	332	86	84		#####
							85.23			

MOISTURE, DILUENT AND MERCURY DATA

Company Indiana-Kentucky Electric Corpor **Date:** 11/3/99 **Test Run:** 3

Location: Unit 6 Precipitator Outlet

SILICA GEL FINAL WT.:	722.60	**grams**
SILICA GEL INITIAL WT.:	705.00	**grams**
DIFFERENCE:	17.60	
FINAL IMPINGER WATER:	4762.20	**mls.**
INITIAL IMPINGER WATER:	4645.80	**mls.**
DIFFERENCE:	116.40	
TOTAL WATER GAIN:	134.00	

ITEM	MERCURY (UG)		= NET WT. (G)
FILTER:	0.116		0.000000116
PROBE WASH:	0.000		0.000000000
		Particle-bound Total:	0.000000116
KCl:	9.376		0.000009376
		Oxidized Total:	0.000009376
HNO_3/H_2O_2:	0.629		0.000000629
$KMNO_4$:	5.866		0.000005866
		Elemental Total:	0.000006495

Orsat Analysis	1	2	3	Average
Carbon Dioxide:	13.00			13.00
Oxygen:	6.00			6.00

Mostardi Platt

ONTARIO HYDRO METHOD DATA ENTRY FORM

Field Data/Calculated Data

Company:	Indiana-Kentucky Electric Corporation
Date:	11/3/99
Test Run:	3
Stack or Duct No.:	Unit 6 Precipitator Outlet
Start Time:	11:15
Stop Time:	13:25

Pb:	29.31	Inches Hg
Static	-3.00	Inches H2O
Ps:	29.09	Inches Hg Abs.
Vlc:	134	ml + grams
Mn:	0.0000	gm
Test Time:	120	minutes
% O2:	6.00	%
% CO2:	13.00	%
% N2:	81.00	%
Delta H:	1.32	Inches H20
Cp:	0.831	Dimensionless - pitot
Tm:	85.23	°F
Sqrt P:	0.759	Inches H20
Ts:	331.71	°F
Vm:	75.859	Cubic Feet
Dn:	0.245	Inches - nozzle
As:	300.00	Sq. Feet
Yd:	1.002	Mcf
CF:	N/A	Process tons/hr
Heat Input:	N/A	MM BTU/hr
Fd:	N/A	dscf/10^6 Btu
Fc:	N/A	scf/10^6 Btu

Vmstd:	72.346	cubic feet (dry)
Vwstd:	6.311	cubic feet (wet)
Bwo:	0.080	
Md:	30.320	lb/lb-mole (dry)
Ms:	29.331	lb/lb-mole (wet)
Excess Air (%)	39.002	
Vs:	51.934	fps
ACFM:	934811.	
DSCFM:	557493.	
WSCFM:	606128	
%I:	99.2	isokinetic variance
GR/ACF:	---	
GR/DSCF:	---	
lbs/hr	---	
lbs/ton prod.:	N/A	
lbs/MM BTU:	N/A	Heat Input
lbs/MM BTU:	N/A	O2 Basis
lbs/MM BTU:	N/A	CO2 Basis

Project Summary-Samples Received Report

Project	*Client*	*Unit*
94403	IKEC	MADISON,IN

Project	*Sample*	*Sample Point*	*Date Received*	*Analyte Detail*
94403	001	INL HNO3 RNS T1	11/4/1999	Mercury
94403	002	INL HNO3 RNS T2	11/4/1999	Mercury
94403	003	INL HNO3 RNS T3	11/4/1999	Mercury
94403	004	INL KCL IMP T1	11/4/1999	Mercury
94403	005	INL KCL IMP T2	11/4/1999	Mercury
94403	006	INL KCL IMP T3	11/4/1999	Mercury
94403	007	IN HNO3/H2O2 T1	11/4/1999	Mercury
94403	008	IN HNO2/H2O2 T2	11/4/1999	Mercury
94403	009	IN HNO3/H2O2 T3	11/4/1999	Mercury
94403	010	INL KMNO4 IM T1	11/4/1999	Mercury
94403	011	INL KMNO4 IM T2	11/4/1999	Mercury
94403	012	INL KMNO4 IM T3	11/4/1999	Mercury
94403	013	OUT HNO3 RNS T1	11/4/1999	Mercury
94403	014	OUT HNO3 RNS T2	11/4/1999	Mercury
94403	015	OUT HNO3 RNS T3	11/4/1999	Mercury
94403	016	OUT KCL IMP T1	11/4/1999	Mercury
94403	017	OUT KCL IMP T2	11/4/1999	Mercury
94403	018	OUT KCL IMP T3	11/4/1999	Mercury
94403	019	OUT HNO3/H2O2-1	11/4/1999	Mercury
94403	020	OUT HNO3/H2O2-2	11/4/1999	Mercury
94403	021	OUT HNO3/H2O2-3	11/4/1999	Mercury
94403	022	OUT KMNO4 IM T1	11/4/1999	Mercury
94403	023	OUT KMNO4 IM T2	11/4/1999	Mercury
94403	024	OUT KMNO4 IM T3	11/4/1999	Mercury
94403	025	FLD BL INL KCL	11/4/1999	Mercury
94403	026	F/B INHNO3/H2O2	11/4/1999	Mercury

Project	*Sample*	*Sample Point*	*Date Received*	*Analyte Detail*
94403	027	FLD BL IN KMNO4	11/4/1999	Mercury
94403	028	FLD BL OUT KCL	11/4/1999	Mercury
94403	029	F/B HNO3/H2O2	11/4/1999	Mercury
94403	030	F/B OUTL KMNO4	11/4/1999	Mercury
94403	031	BLANK QRTZ FLT	11/4/1999	Mercury
94403	032	BLANK QRTZ FLT	11/4/1999	Mercury
94403	033	BLANK QRTZ FLT	11/4/1999	Mercury
94403	034	REAG BLNK HNO3	11/4/1999	Mercury
94403	035	REAG BLNK KCL	11/4/1999	Mercury
94403	036	R/BL HNO3/H2O2	11/4/1999	Mercury
94403	037	REAG BLNK KMNO4	11/4/1999	Mercury
94403	038	R/BL HYDROXYLAM	11/4/1999	Mercury
94403	039	COAL SAMPLE T1	11/4/1999	Chlorine
94403	039	COAL SAMPLE T1	11/4/1999	Ultimate/Proximate on Coal
94403	039	COAL SAMPLE T1	11/4/1999	Mercury
94403	040	COAL SAMPLE T2	11/4/1999	Mercury
94403	040	COAL SAMPLE T2	11/4/1999	Chlorine
94403	040	COAL SAMPLE T2	11/4/1999	Ultimate/Proximate on Coal
94403	041	COAL SAMPLE T3	11/4/1999	Mercury
94403	041	COAL SAMPLE T3	11/4/1999	Chlorine
94403	041	COAL SAMPLE T3	11/4/1999	Ultimate/Proximate on Coal
94403	042	ASH SAMPLE T1	11/4/1999	Hold
94403	043	ASH SAMPLE T2	11/4/1999	Hold
94403	044	ASH SAMPLE T3	11/4/1999	Hold

LABORATORY REPORT

TEI Analytical, Inc.
7177 N. Austin
Niles, IL 60714-4617
847-647-1345

PREPARED FOR:

Frank Jarke
Mostardi-Platt Associates, Inc.
945 Oaklawn Avenue
Elmhurst, IL 60126

Report #: 37729
Report Date: 2/14/00
Sample Received:
11/12/99 13:21

TEI	94403	Type	Total ug	mg/kg	Date	%RSD	Lin.Reg.	Blank	CPI	MS	MSD
37729	001	HNO3	<0.004		1/9/2000	2.83	0.99998	NA	101	108	112
37730	002	HNO3	<0.004		1/9/2000	2.19	0.99998	NA	101	108	112
37731	003	HNO3	<0.004		1/9/2000	4.76	0.99998	NA	101	108	112
37732	004	KCl	2.66		1/6/2000	0.271	0.99999	0.323	99.5	105	93.5
37733	005	KCl	4.09		1/9/2000	0.173	0.99998	0.323	101	108	112
37734	006	KCl	3.85		1/18/2000	0.373	0.99992	0.323	94.5	118	114
37735	007	H2O2	0.756		1/12/2000	0.753	0.99999	0.084	89.8	111	110
37736	008	H2O2	1.02		1/12/2000	0.817	0.99999	0.084	89.8	111	110
37737	009	H2O2	1.13		1/12/2000	0.943	0.99999	0.084	89.8	111	110
37738	010	KMnO4	11.9		12/15/1999	0.368	0.99999	0.014	96.5	112	113
37739	011	KMnO4	11.7		12/15/1999	0.482	0.99999	0.014	96.5	112	113
37740	012	KMnO4	11.8		12/15/1999	0.707	0.99999	0.014	96.5	112	113
37741	013	HNO3	<0.003		1/9/2000	2.53	0.99998	NA	101	108	112
37742	014	HNO3	<0.003		1/9/2000	2.58	0.99998	NA	101	108	112
37743	015	HNO3	<0.003		1/9/2000	2.79	0.99998	NA	101	108	112
37744	016	KCl	6.52		1/6/2000	0.435	0.99999	0.323	99.5	105	93.5
37745	017	KCl	8.03		1/12/2000	0.253	0.99999	0.23	91.6	111	110
37746	018	KCl	9.38		1/6/2000	0.697	0.99999	0.323	99.5	105	93.5
37747	019	H2O2	0.894		1/12/2000	1.2	0.99999	0.084	89.8	111	110
37748	020	H2O2	0.769		1/15/2000	1.09	0.99986	0.095	103	120	120
37749	021	H2O2	0.629		1/15/2000	0.885	0.99986	0.095	103	120	120
37750	022	KMnO4	7.56		12/15/1999	0.592	0.99999	0.014	96.5	112	113
37751	023	KMnO4	7.74		12/15/1999	0.472	0.99999	0.014	96.5	112	113

Gayle E. O'Neill, Ph.D.

This report may not be reproduced except in its entirety.

LABORATORY REPORT

TEI Analytical, Inc.
7177 N. Austin
Niles, IL 60714-4617
847-647-1345

PREPARED FOR:

Frank Jarke
Mostardi-Platt Associates, Inc.
945 Oaklawn Avenue
Elmhurst, IL 60126

Report #: 37729
Report Date: 2/14/00
Sample Received:
11/12/99 13:21

TEI	94403	Type	Total ug	mg/kg	Date	%RSD	Lin.Reg.	Blank	CPI	MS	MSD
37752	024	KMnO4	5.87		12/15/1999	0.392	0.99999	0.014	96.5	112	113
37753	025	KCl	0.482		1/4/2000	0.463	1	0.103	97.2	107	107
37754	026	H2O2	0.124		1/15/2000	4.85	0.99983	0.095	103	120	120
37755	027	KMnO4	0.246		12/15/1999	0.79	0.99999	0.014	96.5	112	113
37756	028	KCl	0.370		1/4/2000	0.692	1	0.103	97.2	107	107
37757	029	H2O2	<0.04		1/15/2000	0.957	0.99986	0.095	103	120	120
37758	030	KMnO4	1.86		12/15/1999	0.662	0.99999	0.014	96.5	112	113
37759	031	Filt		<0.006	1/11/2000	12.9	0.99993	0.098	93.3	109	114
37760	032	Filt		<0.006	1/11/2000	0.619	0.99993	0.098	93.3	109	114
37761	033	Filt		<0.006	1/11/2000	2.52	0.99993	0.098	93.3	109	114
37762	034	HNO3	<0.002		1/9/2000	4.67	0.99998	NA	101	108	112
37763	035	KCl	0.004		1/4/2000	8.06	1	0.103	97.2	107	107
37764	036	H2O2	<0.002		1/9/2000	3.11	0.99998	0.135	101	108	112
37765	037	KMnO4	0.004		12/15/1999	8.06	0.99999	0.014	96.5	112	113
37766	038	NH2OH	<0.003		1/9/2000	1.22	0.99998	NA	101	108	112
37767	001Filter	Filt		0.129	1/12/2000	0.12	0.99999	0.3	91.3	99.7	100
37768	002Filter	Filt		0.005	1/12/2000	2.12	0.99999	0.3	91.3	99.7	100
37769	003Filter	Filt		<0.003	1/12/2000	0.407	0.99999	0.3	91.3	99.7	100
37770	013Filter	Filt		0.359	1/12/2000	0.11	0.99999	0.3	91.3	99.7	100
37771	014Filter	Filt		<0.003	1/12/2000	3.6	0.99999	0.3	91.3	99.7	100
37772	~~%RSD~~	Filt		0.033	1/12/2000	0.969	0.99999	0.3	91.3	99.7	100

015 Filter

Gayle E. O'Neill, Ph.D.

This report may not be reproduced except in its entirety.

LABORATORY REPORT

TEI Analytical, Inc.
7177 N. Austin
Niles, IL 60714-4617
847-647-1345

PREPARED FOR:

Frank Jarke
Mostardi-Platt Associates, Inc.
945 Oaklawn Avenue
Elmhurst, IL 60126

Report #: 37729
Report Date: 2/14/00
Sample Received:
11/12/99 13:21

Mercury (Ontario Hydro Method)

The QAPP called for the analysis of all samples in duplicate with every tenth sample run in triplicate. To simplify the instrument setup, we chose to run all samples, blanks, standards, matrix spikes and matrix spike duplicates in triplicate. The reported %RSD is for the triplicate measurements.

All sample results are reported as total micrograms in the sample received by the laboratory, with the exception of the filter samples. The filter sample results are expressed as mg/kg.

The instrument was calibrated at least daily with a blank and four standards. The Lin.Reg. column in this report represents the linear regression coefficient obtained during the calibration.

The laboratory method blank is reported in ug/l in the Blank column of this report. For samples requiring only addition of Hydroxylamine Hydrochloride, NA is entered in this column. No laboratory method blanks were applicable for these samples.

The CPI column presents the % Recovery of an independent standard (obtained from CPI). The calibration curve was prepared in our laboratory from Mercuric Chloride in accordance with EPA Method 7470.

The MS and MSD columns present the % Recovery of the Matrix Spikes and Matrix Spike Duplicates.

Gayle E. O'Neill, Ph.D.

This report may not be reproduced except in its entirety.

COMMERCIAL TESTING & ENGINEERING CO.

GENERAL OFFICES: 1919 SOUTH HIGHLAND AVE., SUITE 210-B, LOMBARD, ILLINOIS 60148 • TEL: 630-953-9300 FAX: 630-953-9306

SINCE 1908®

SGS Member of the SGS Group (Société Générale de Surveillance)

ADDRESS ALL CORRESPONDENCE TO
16130 VAN DRUNEN RD
SOUTH HOLLAND, IL 6047
TEL: (708) 331-290
FAX: (708) 333-306

November 22, 1999

MOSTARDI-PLATT ASSOCIATES, INC
945 Oaklawn Avenue
Elmhurst, IL 60126
Attn: Frank Jarke

Sample identification by
Mostardi-Platt Assoc., Inc.

Kind of sample reported to us: Coal

MPA Sample No: 94403-039

Sample taken at: ------

Sample taken by: Mostardi-Platt Assoc., Inc.

Date sampled: November 2, 1999

Date received: November 9, 1999

P.O. No. 22551

Analysis Report No. 71-106575

Page 1 of

PROXIMATE ANALYSIS	As Received	Dry Basis
% Moisture	22.69	xxxxx
% Ash	6.25	8.08
% Volatile	30.59	39.57
% Fixed Carbon	40.47	52.35
	100.00	100.00
Btu/lb	9659	12494
% Sulfur	0.66	0.86
MAF Btu		13592

ULTIMATE ANALYSIS	As Received	Dry Bas
% Moisture	22.69	xxxxx
% Carbon	56.20	72.69
% Hydrogen	3.61	4.67
% Nitrogen	0.78	1.01
% Sulfur	0.66	0.86
% Ash	6.25	8.08
% Oxygen(diff)	9.81	12.69
	100.00	100.00
CHLORIDE ug/g	333	430

METHODS

Moisture: ASTM D 3302; Ash: ASTM D 3174; Volatile: ASTM D 3175; Fixed Carbon: Calculated Value; ASTM D 3172
Btu/lb: ASTM 3286; Sulfur: ASTM D 4239 (Method C); Carbon, Hydrogen & Nitrogen: ASTM D 5373; Chloride: ASTM D 4208

Respectfully submitted,
COMMERCIAL TESTING & ENGINEERING CO.

South Holland Laboratory

MEMBE
ACI

OVER 40 BRANCH LABORATORIES STRATEGICALLY LOCATED IN PRINCIPAL COAL MINING AREAS, TIDEWATER AND GREAT LAKES PORTS, AND RIVER LOADING FACILITIE

F-465
Original Watermarked For Your Protection

TERMS AND CONDITIONS ON REVERSE

COMMERCIAL TESTING & ENGINEERING CO.
GENERAL OFFICES: 1919 SOUTH HIGHLAND AVE., SUITE 210-B, LOMBARD, ILLINOIS 60148 • TEL: 630-953-9300 FAX: 630-953-9306
SINCE 1908®
SGS Member of the SGS Group (Société Générale de Surveillance)

ADDRESS ALL CORRESPONDENCE TO:
16130 VAN DRUNEN RD.
SOUTH HOLLAND, IL 60473
TEL: (708) 331-2900
FAX: (708) 333-3060

November 22, 1999

MOSTARDI-PLATT ASSOCIATES, INC
945 Oaklawn Avenue
Elmhurst, IL 60126
Attn: Frank Jarke

Sample identification by
Mostardi-Platt Assoc., Inc.

Kind of sample reported to us: Coal

MPA Sample No: 94403-039

Sample taken at: ------

Sample taken by: Mostardi-Platt Assoc., Inc.

Date sampled: November 2, 1999

Date received: November 9, 1999

P.O. No. 22551

Analysis Report No. 71-106575

	Dry Basis, ug/g	MDL, ug/g
Mercury, Hg	0.08	0.01

	Expected	Observed
SARM 1157	0.05	0.05
NIST 1630A	0.11	0.11

MDL Denotes Method Detection Limit

METHOD
Mercury: ASTM D 3684

Respectfully submitted,
COMMERCIAL TESTING & ENGINEERING CO.

South Holland Laboratory

MEMBER ACIL

OVER 40 BRANCH LABORATORIES STRATEGICALLY LOCATED IN PRINCIPAL COAL MINING AREAS, TIDEWATER AND GREAT LAKES PORTS, AND RIVER LOADING FACILITIES
ginal Watermarked For Your Protection
TERMS AND CONDITIONS ON REVERSE

COMMERCIAL TESTING & ENGINEERING CO.

GENERAL OFFICES: 1919 SOUTH HIGHLAND AVE., SUITE 210-B, LOMBARD, ILLINOIS 60148 • TEL: 630-953-9300 FAX: 630-953-9306

SINCE 1908®

SGS Member of the SGS Group (Société Générale de Surveillance)

ADDRESS ALL CORRESPONDENCE TO:
16130 VAN DRUNEN RD.
SOUTH HOLLAND, IL 60473
TEL: (708) 331-2900
FAX: (708) 333-3060

November 15, 1999

MOSTARDI-PLATT ASSOCIATES, INC
945 Oaklawn Avenue
Elmhurst, IL 60126
Attn: Frank Jarke

Sample identification by
Mostardi-Platt Assoc., Inc.

Kind of sample reported to us Coal

MPA Sample No: 94403-040

Sample taken at ------

Sample taken by Mostardi-Platt Assoc., Inc.

Date sampled November 3, 1999

Date received November 9, 1999

P.O. No. 22551

Analysis Report No. 71-106576

PROXIMATE ANALYSIS

	As Received	Dry Basis
% Moisture	22.74	xxxxx
% Ash	6.69	8.66
% Volatile	29.99	38.82
% Fixed Carbon	40.58	52.52
	100.00	100.00
Btu/lb	9718	12578
% Sulfur	0.66	0.86
MAF Btu		13771

ULTIMATE ANALYSIS

	As Received	Dry Basis
% Moisture	22.74	xxxxx
% Carbon	56.42	73.02
% Hydrogen	3.55	4.60
% Nitrogen	0.80	1.04
% Sulfur	0.66	0.86
% Ash	6.69	8.66
% Oxygen(diff)	9.14	11.82
	100.00	100.00
CHLORIDE ug/g	289	374

METHODS

Moisture: ASTM D 3302; Ash: ASTM D 3174; Volatile: ASTM D 3175; Fixed Carbon: Calculated Value; ASTM D 3172
Btu/lb: ASTM 3286; Sulfur: ASTM D 4239 (Method C); Carbon, Hydrogen & Nitrogen: ASTM D 5373; Chloride: ASTM D 4208

Respectfully submitted,
COMMERCIAL TESTING & ENGINEERING CO.

Joseph B. Fousek

South Holland Laboratory

MEMBER ACIL

OVER 40 BRANCH LABORATORIES STRATEGICALLY LOCATED IN PRINCIPAL COAL MINING AREAS, TIDEWATER AND GREAT LAKES PORTS, AND RIVER LOADING FACILITIES

465
Original Watermarked For Your Protection

TERMS AND CONDITIONS ON REVERSE

COMMERCIAL TESTING & ENGINEERING CO.
GENERAL OFFICES: 1919 SOUTH HIGHLAND AVE., SUITE 210-B, LOMBARD, ILLINOIS 60148 • TEL: 630-953-9300 FAX: 630-953-9306
SINCE 1908®
SGS Member of the SGS Group (Société Générale de Surveillance)

ADDRESS ALL CORRESPONDENCE TO:
16130 VAN DRUNEN RD.
SOUTH HOLLAND, IL 60473
TEL: (708) 331-2900
FAX: (708) 333-3060

November 15, 1999

MOSTARDI-PLATT ASSOCIATES, INC
945 Oaklawn Avenue
Elmhurst, IL 60126
Attn: Frank Jarke

Sample identification by
Mostardi-Platt Assoc., Inc.

Kind of sample reported to us Coal

MPA Sample No: 94403-040

Sample taken at ------

Sample taken by Mostardi-Platt Assoc., Inc.

Date sampled November 3, 1999

Date received November 9, 1999

P.O. No. 22551

Analysis Report No. 71-106576

	Dry Basis, ug/g	MDL, ug/g
Mercury, Hg	0.08	0.01

	Expected	Observed
SARM 1157	0.05	0.05
NIST 1630A	0.11	0.11

MDL Denotes Method Detection Limit

METHOD
Mercury: ASTM D 3684

Respectfully submitted,
COMMERCIAL TESTING & ENGINEERING CO.

Joseph B. Hauser

South Holland Laboratory

MEMBER ACIL

OVER 40 BRANCH LABORATORIES STRATEGICALLY LOCATED IN PRINCIPAL COAL MINING AREAS, TIDEWATER AND GREAT LAKES PORTS, AND RIVER LOADING FACILITIES

Original Watermarked For Your Protection

TERMS AND CONDITIONS ON REVERSE

COMMERCIAL TESTING & ENGINEERING CO.

GENERAL OFFICES: 1919 SOUTH HIGHLAND AVE., SUITE 210-B, LOMBARD, ILLINOIS 60148 • TEL: 630-953-9300 FAX: 630-953-9306

SINCE 1908®

SGS Member of the SGS Group (Société Générale de Surveillance)

ADDRESS ALL CORRESPONDENCE TO:
16130 VAN DRUNEN RD.
SOUTH HOLLAND, IL 60473
TEL: (708) 331-2900
FAX: (708) 333-3060

November 15, 1999

MOSTARDI-PLATT ASSOCIATES, INC
945 Oaklawn Avenue
Elmhurst, IL 60126
Attn: Frank Jarke

Sample identification by
Mostardi-Platt Assoc., Inc.

Kind of sample reported to us: Coal

MPA Sample No: 94403-041

Sample taken at: ------

Sample taken by: Mostardi-Platt Assoc., Inc.

Date sampled: November 3, 1999

Date received: November 9, 1999

P.O. No. 22551

Analysis Report No. 71-106577

PROXIMATE ANALYSIS

	As Received	Dry Basis
% Moisture	21.52	xxxxx
% Ash	7.05	8.98
% Volatile	29.58	37.69
% Fixed Carbon	41.85	53.33
	100.00	100.00
Btu/lb	9914	12632
% Sulfur	0.78	0.99
MAF Btu		13878

ULTIMATE ANALYSIS

	As Received	Dry Basis
% Moisture	21.52	xxxxx
% Carbon	57.60	73.39
% Hydrogen	3.52	4.49
% Nitrogen	0.83	1.06
% Sulfur	0.78	0.99
% Ash	7.05	8.98
% Oxygen(diff)	8.70	11.09
	100.00	100.00
CHLORIDE ug/g	407	519

METHODS

Moisture: ASTM D 3302; Ash: ASTM D 3174; Volatile: ASTM D 3175; Fixed Carbon: Calculated Value; ASTM D 3172
Btu/lb: ASTM 3286; Sulfur: ASTM D 4239 (Method C); Carbon, Hydrogen & Nitrogen: ASTM D 5373; Chloride: ASTM D 4208

Respectfully submitted,
COMMERCIAL TESTING & ENGINEERING CO.

Joseph B. Nurser 11/16

South Holland Laboratory

MEMBER ACIL

OVER 40 BRANCH LABORATORIES STRATEGICALLY LOCATED IN PRINCIPAL COAL MINING AREAS, TIDEWATER AND GREAT LAKES PORTS, AND RIVER LOADING FACILITIES

465
iginal Watermarked For Your Protection

TERMS AND CONDITIONS ON REVERSE

COMMERCIAL TESTING & ENGINEERING CO.
GENERAL OFFICES: 1919 SOUTH HIGHLAND AVE., SUITE 210-B, LOMBARD, ILLINOIS 60148 • TEL: 630-953-9300 FAX: 630-953-9306
SINCE 1908®
SGS Member of the SGS Group (Société Générale de Surveillance)

ADDRESS ALL CORRESPONDENCE TO:
16130 VAN DRUNEN RD.
SOUTH HOLLAND, IL 60473
TEL: (708) 331-2900
FAX: (708) 333-3060

November 15, 1999

MOSTARDI-PLATT ASSOCIATES, INC
945 Oaklawn Avenue
Elmhurst, IL 60126
Attn: Frank Jarke

Sample identification by
Mostardi-Platt Assoc., Inc.

Kind of sample reported to us: Coal

MPA Sample No: 94403-041

Sample taken at: ------

Sample taken by: Mostardi-Platt Assoc., Inc.

Date sampled: November 3, 1999

Date received: November 9, 1999

P.O. No. 22551

Analysis Report No. 71-106577

	Dry Basis, ug/g	MDL, ug/g
Mercury, Hg	0.08	0.01

	Expected	Observed
SARM 1157	0.05	0.05
NIST 1630A	0.11	0.11

MDL Denotes Method Detection Limit

METHOD
Mercury: ASTM D 3684

Respectfully submitted,
COMMERCIAL TESTING & ENGINEERING CO.

Joseph B. Nausey, V.P.
South Holland Laboratory

MEMBER ACIL

OVER 40 BRANCH LABORATORIES STRATEGICALLY LOCATED IN PRINCIPAL COAL MINING AREAS, TIDEWATER AND GREAT LAKES PORTS, AND RIVER LOADING FACILITIES
nal Watermarked For Your Protection
TERMS AND CONDITIONS ON REVERSE

LIST OF PARTICIPANTS

Name	Organization	Project Role
Shannon Gatke	Indiana-Kentucky Electric	Plant Coordinator
Paul Chu	Electric Power Research Institute	Project Manager
James R. Platt	Mostardi Platt	Vice President
Andy Dickson	Mostardi Platt	Field Engineer
John Wendell	Mostardi Platt	Laboratory Chemist
Norm Smith	Mostardi Platt	Test Technician
Corey Shelby	Mostardi Platt	Test Technician
Chris Mirecki	Mostardi Platt	Test Technician
Paul Phillips	Mostardi Platt	Test Technician
Gayle O'Neill, Ph.D.	TEI Analytical, Inc.	Speciated Hg Sample Analysis
Joseph Houser	CTE	Coal Sample Analysis