Improving Portability and Reducing Cost In The TTP Program Through Design and Implementation of a Compact Alternative

Avraham Teitz, Mark Shanis, Mustafa Mustafa, and Mark Winter

US EPA Region 2 Edison, NJ

Mark Shanis at US EPA, OAQPS, RTP, NC

TTP Trailer Advantages

- **Turn key system**
  - Same Time/Every Time Setup
  - Lessens contractor training needs
  - Easier startup @ site
- **Established and Proven Design**
  - In California
  - In The EPA Regions

TTP Trailer Disadvantages

- **Safety**
  - Hitch-Up/Release
  - In Traffic/In Transit
- **Access to Sites**
  - Terrain
  - Metro Traffic/Bridge and Tunnels
  - Homeland Security Issues

TTP Trailer Disadvantages

- **Operational Overhead**
  - Trailer Maintenance
  - Generator Maintenance
  - HVAC system
  - Fuel
  - Aging of Instruments

Essentials for Compact System

- Maintain identical analytical capability
- Smaller Vehicle/Simpler Vehicle
- Economical

Analytical Equivalency
Plumbing Modifications

TTP Trailer

- 2 Glass Manifolds
- SS Calibration Gas Manifold for CO analyzer
- 3 way valve for Cal Gas/Audit Gas Selection
- 150' x 5/16" i.d. SS jacketed Teflon presentation line
- 1/8" SS line from Multi blend cylinder to calibrator

Compact TTP

- Teflon Tee's
- Teflon tubing attached to individual CO cylinders in turn
- DESO Quick Connect fittings to switch between Cal Gas/Audit Gas
- 50' x 3/8" i.d. Teflon presentation line
- 1/8" Teflon line from Multi blend cylinder to calibrator
- Removed "extra" needle valve

Analytical Equivalency

TTP Trailer Schematic for Ozone Audits

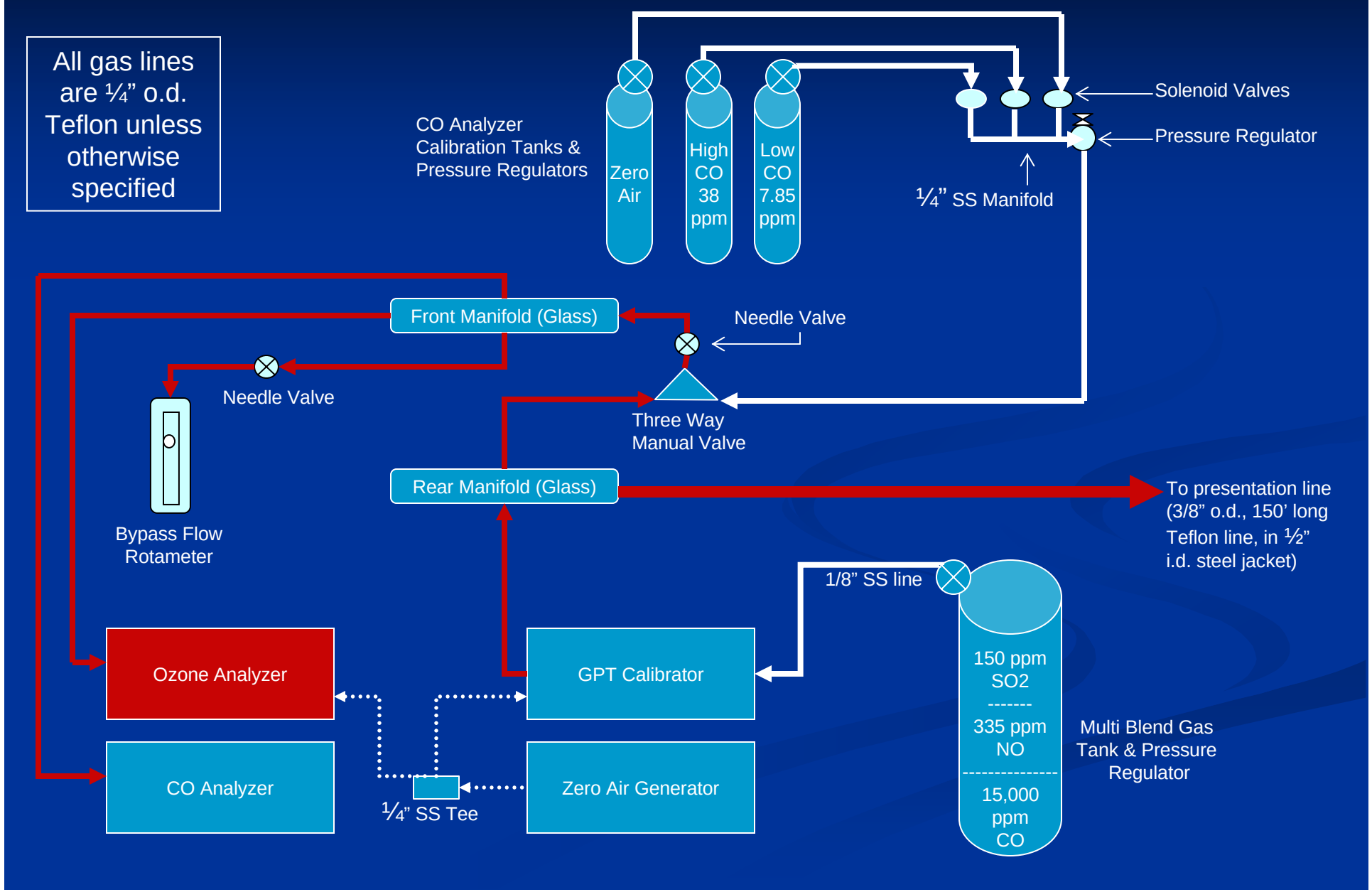

Analytical Equivalency

Compact TTP Schematic for Ozone Audits

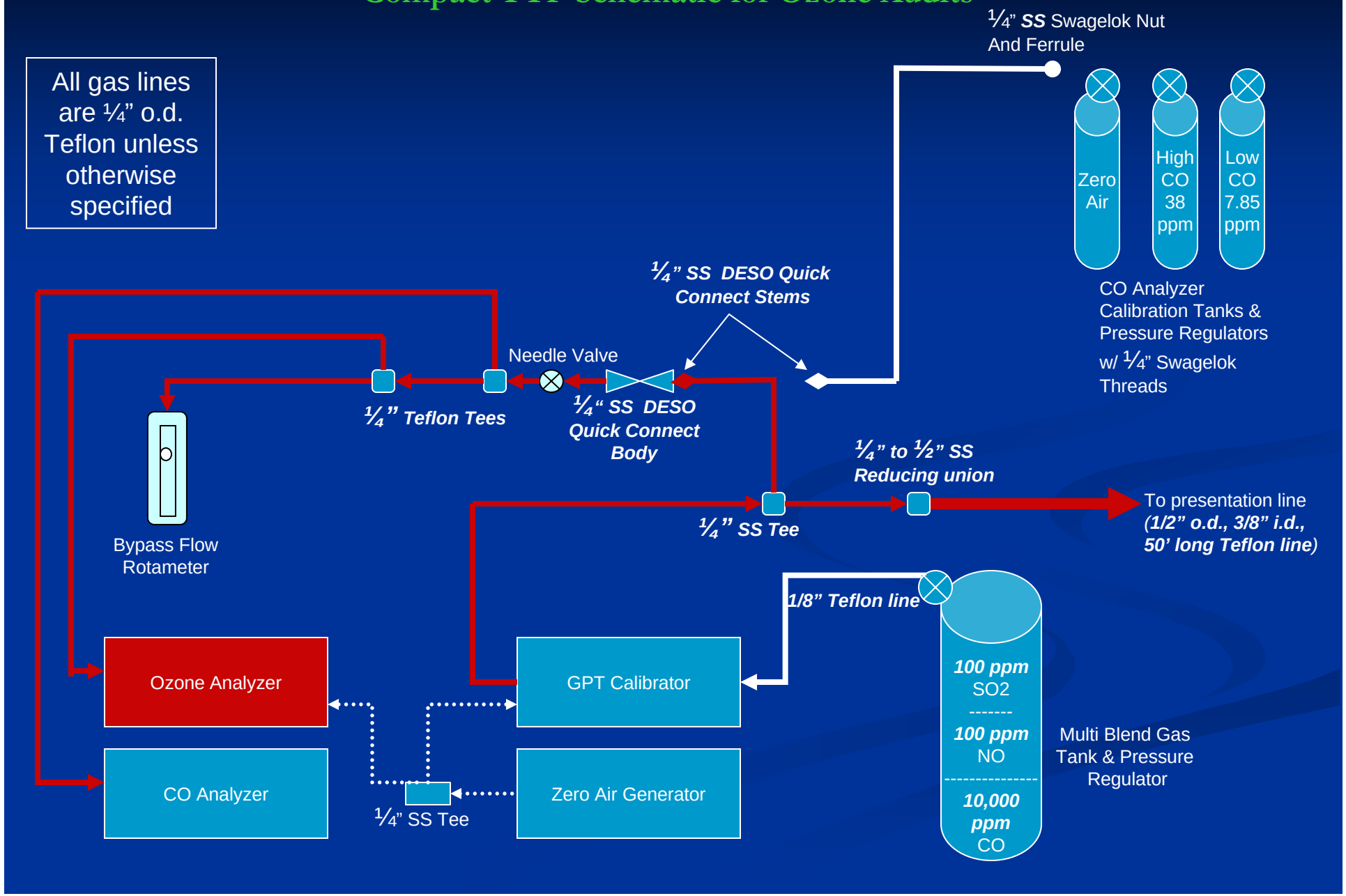

Analytical Equivalency

TTP Trailer Schematic for Multi Blend Audits

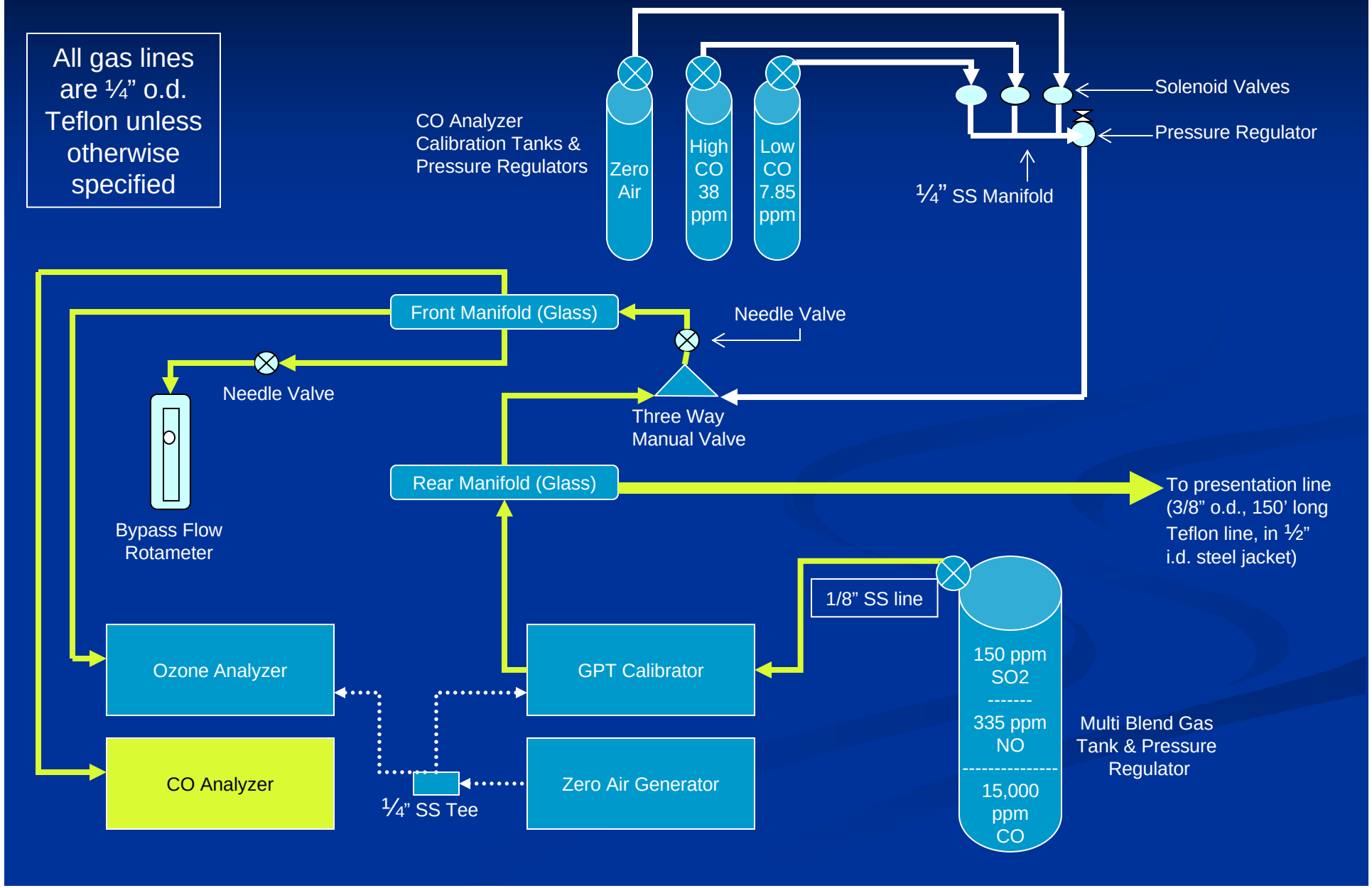

Analytical Equivalency

Compact TTP Schematic for Multi Blend Audits

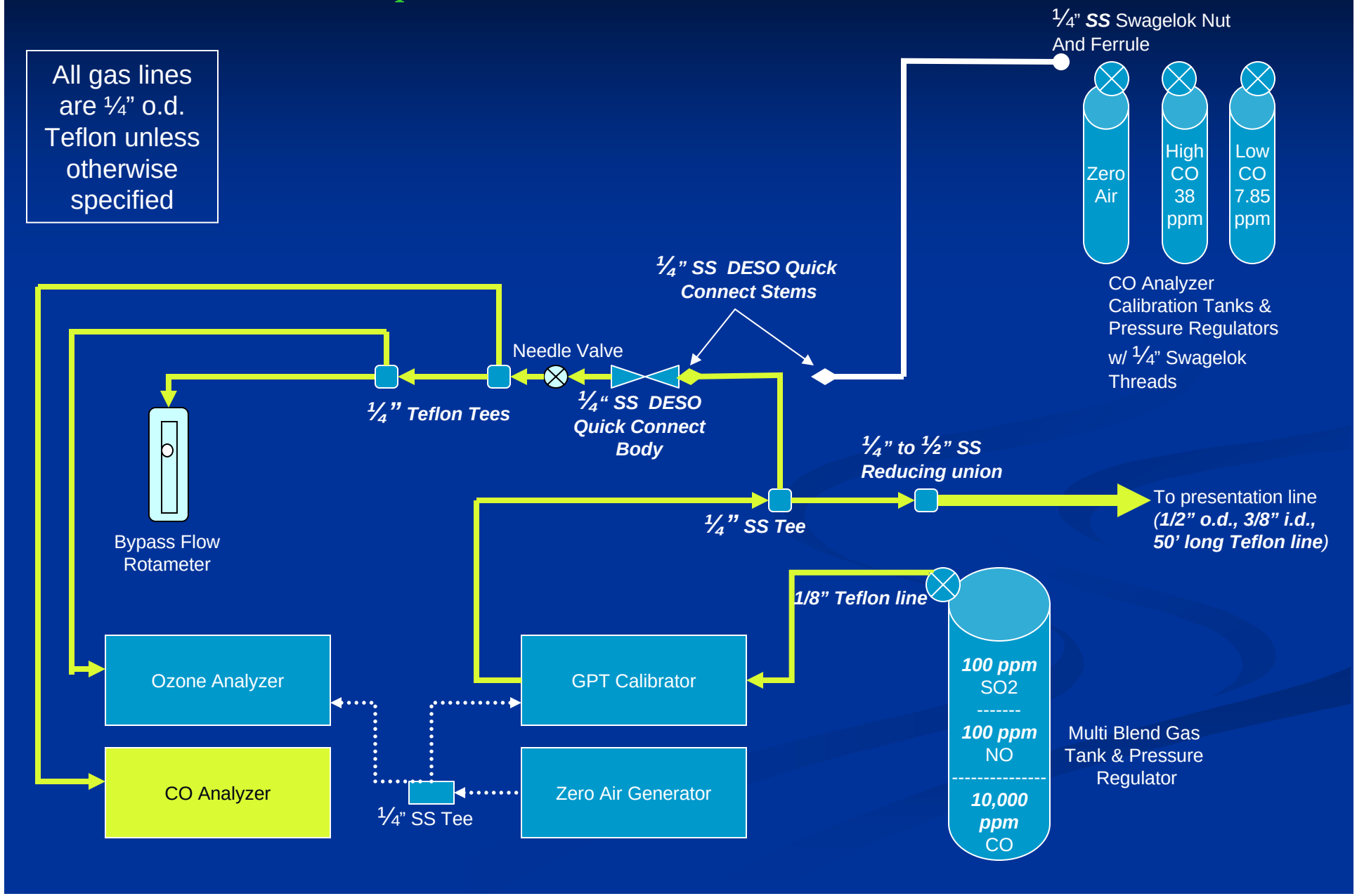

Analytical Equivalency

TTP Trailer Schematic for Calibration of CO Analyzer

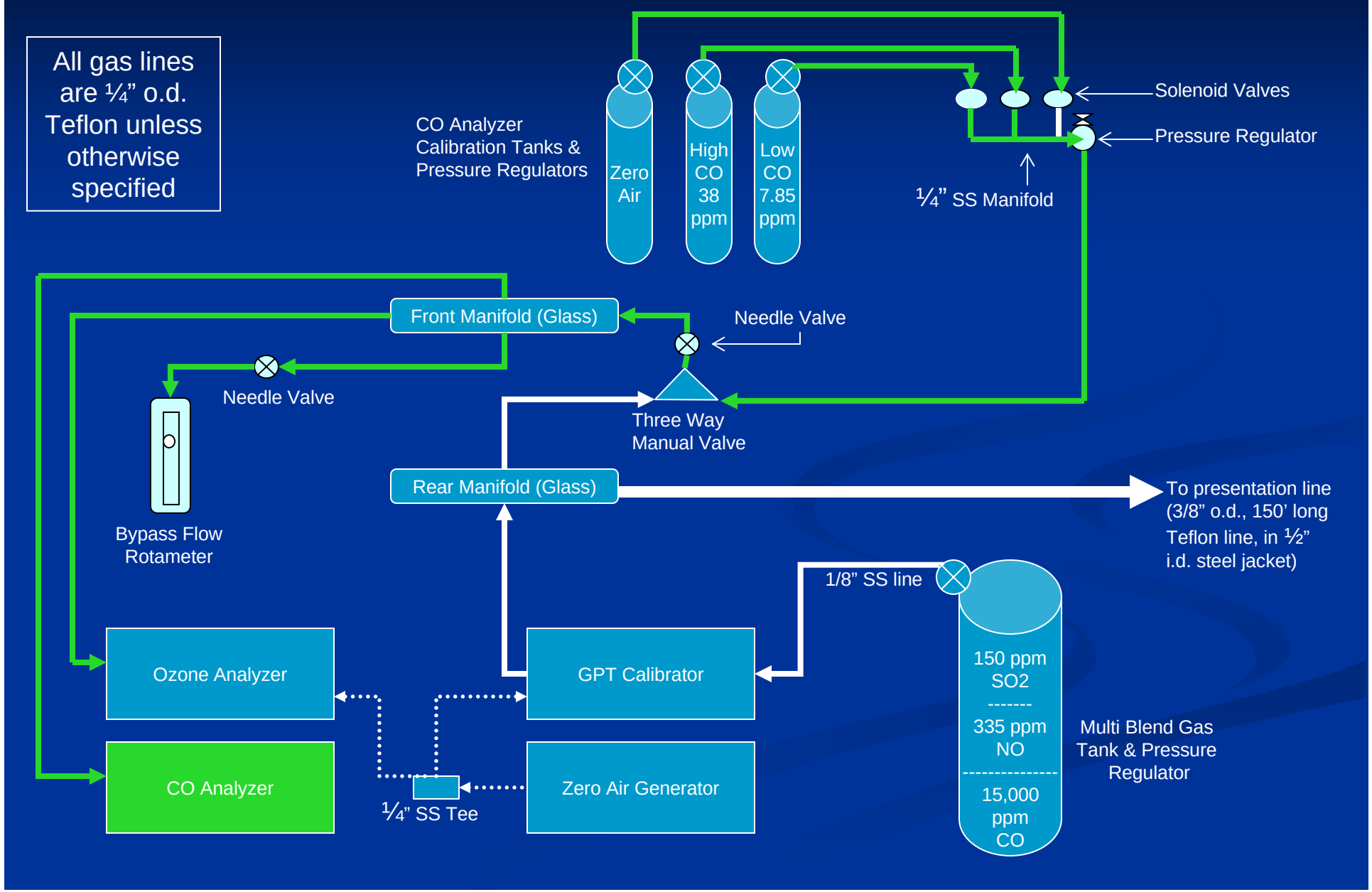

Compact TTP Schematic for CO Analyzer Calibration

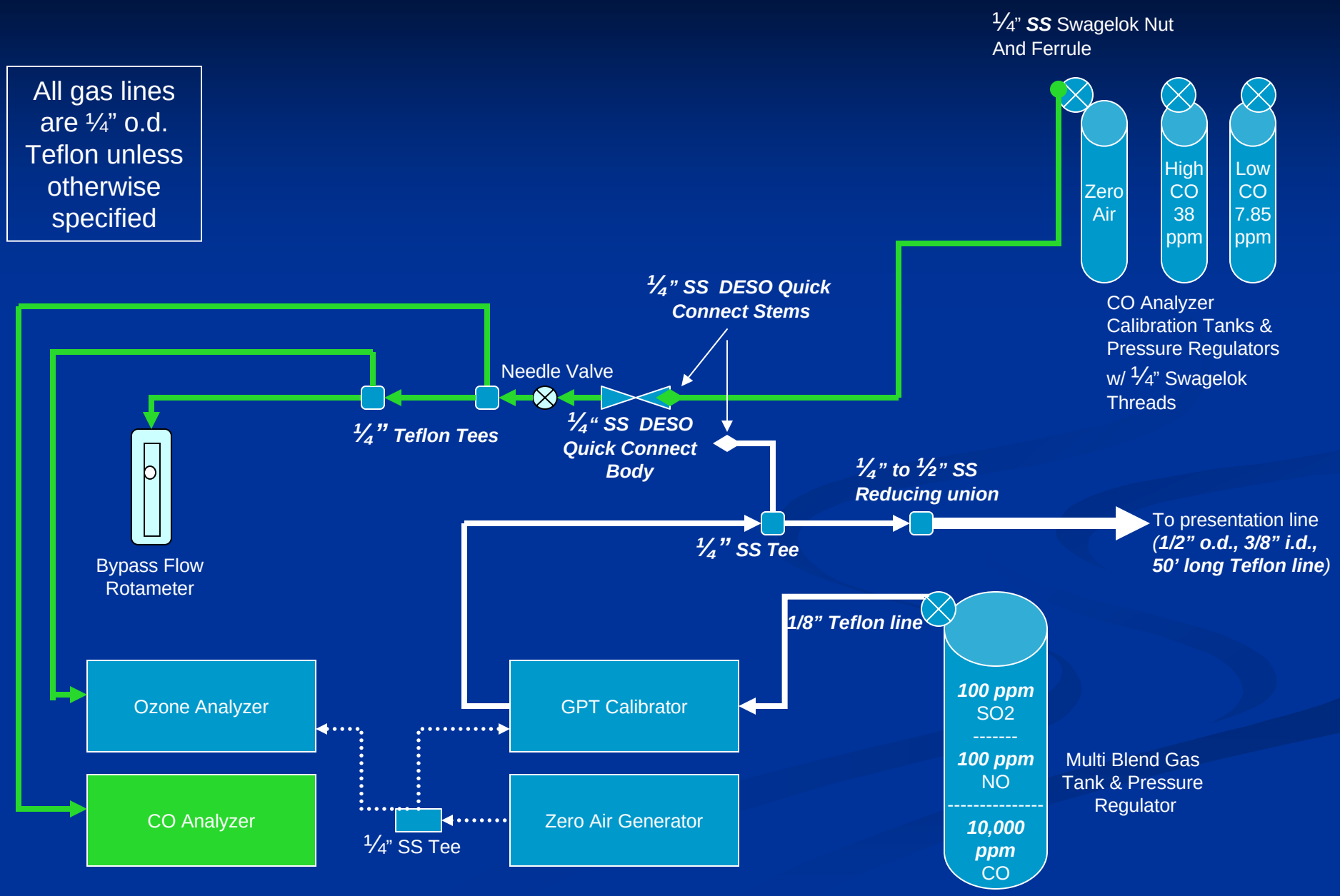

Thermo Environmental Instruments
Thermo Environmental Instruments
FURMAN
Environics
API

FURMAN
Environics
API

DryCal
DC-Lite
Thermo Environmental Instruments
49C O3 Calibrator
Primary Standard
RUN
MENU
ENTER
HELP
Thermo Environmental Instruments
49C CO Analyzer
RUN
MENU
ENTER
HELP

A.C. LINE VOLTAGE
REGULATOR
MODEL AR-1215
INPUT VOLTAGE
75 - 98 101 105 110 115 120 125 131 137 140 - 150
IN
REGULATION
EXTREME
VOLTAGE
SHUTDOWN
FURMAN
Power Conditioning
1.0
.8
.6
.4
.2
l/min AIR
A53017
Environics
SERIES 9100
COMPUTERIZED AMBIENT MONITORING
CALIBRATION SYSTEM

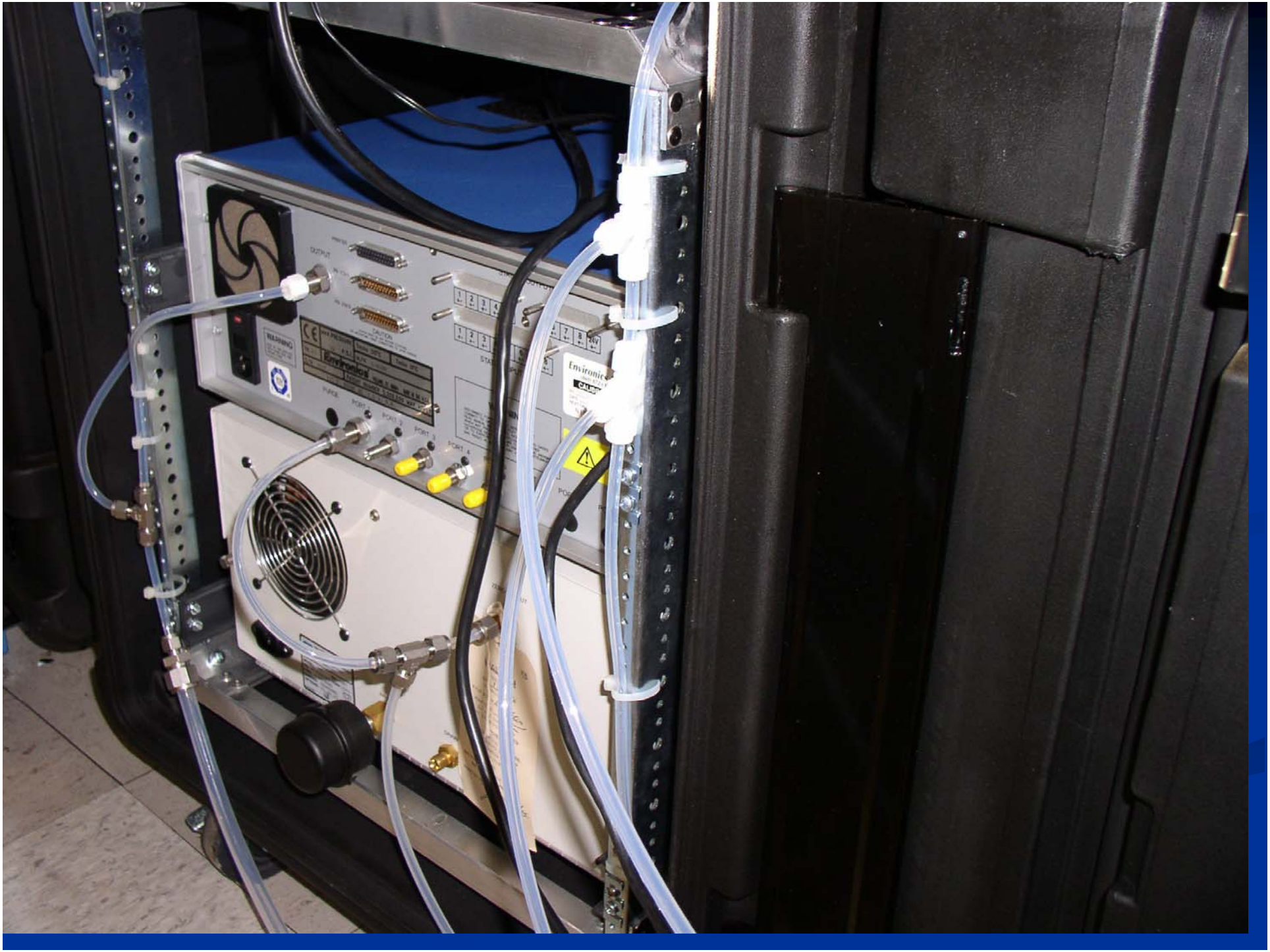
Environics

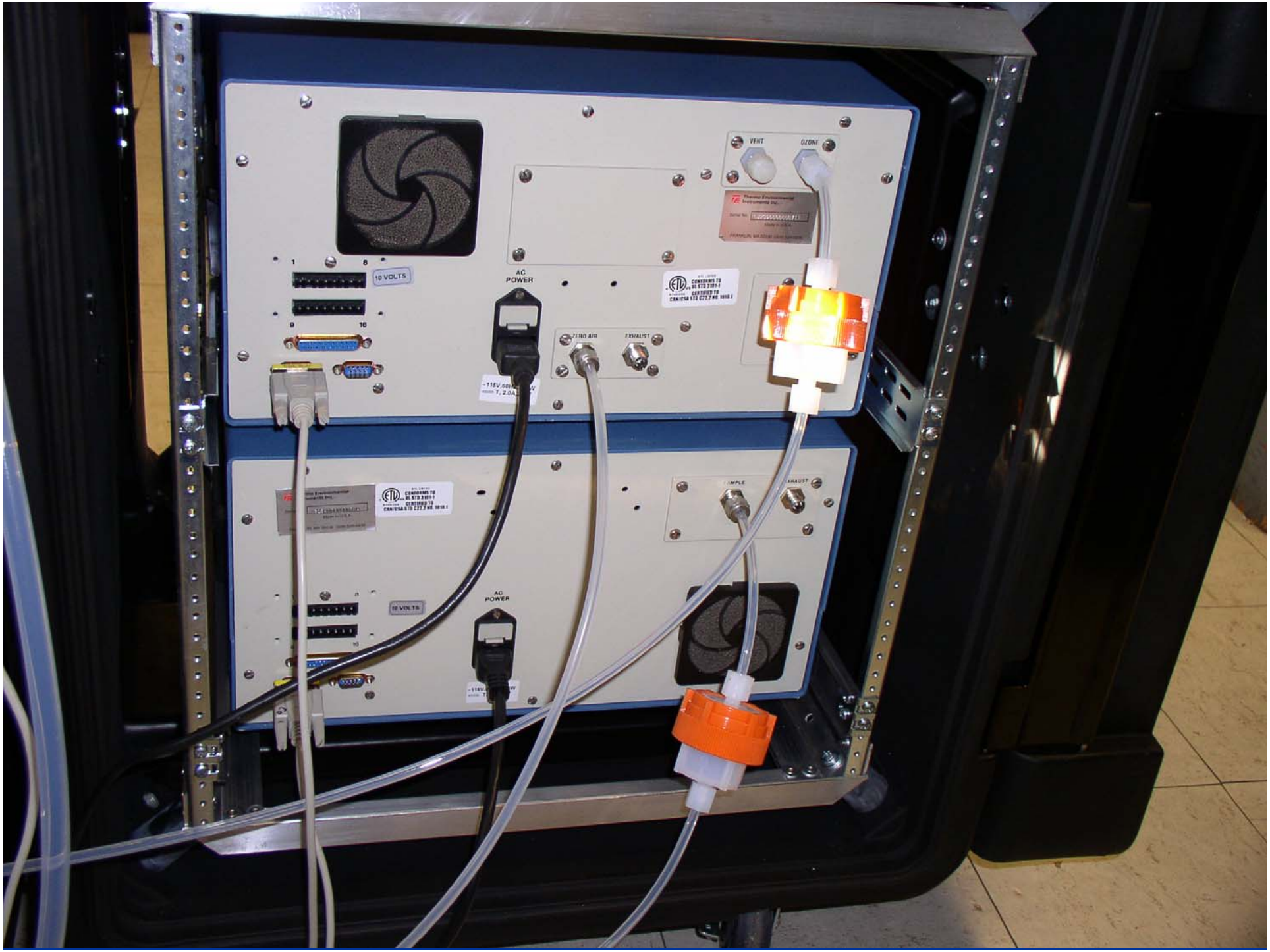
VENT
OZONE
10 VOLTS
AC POWER
ZERO AIR
EXHAUST
10 VOLTS
AC POWER

Thermo Environmental Instruments
Thermo Environmental Instruments

Analytical Equivalency

Testing The Compact System

vs.

EPA R2 Analytical Analyzer Suite

NIST Ozone SRP #3

EPA Reference and Equivalent instruments for NOX, CO, SO2

NIST SRM gases

BIOS ML-800 Flow Calibrator

DryCal
DC-Lite
DryCal
DC-Lite
DryCal
DC-Lite

EXIT
DANGER
EXPLOSIVES
KEEP AWAY

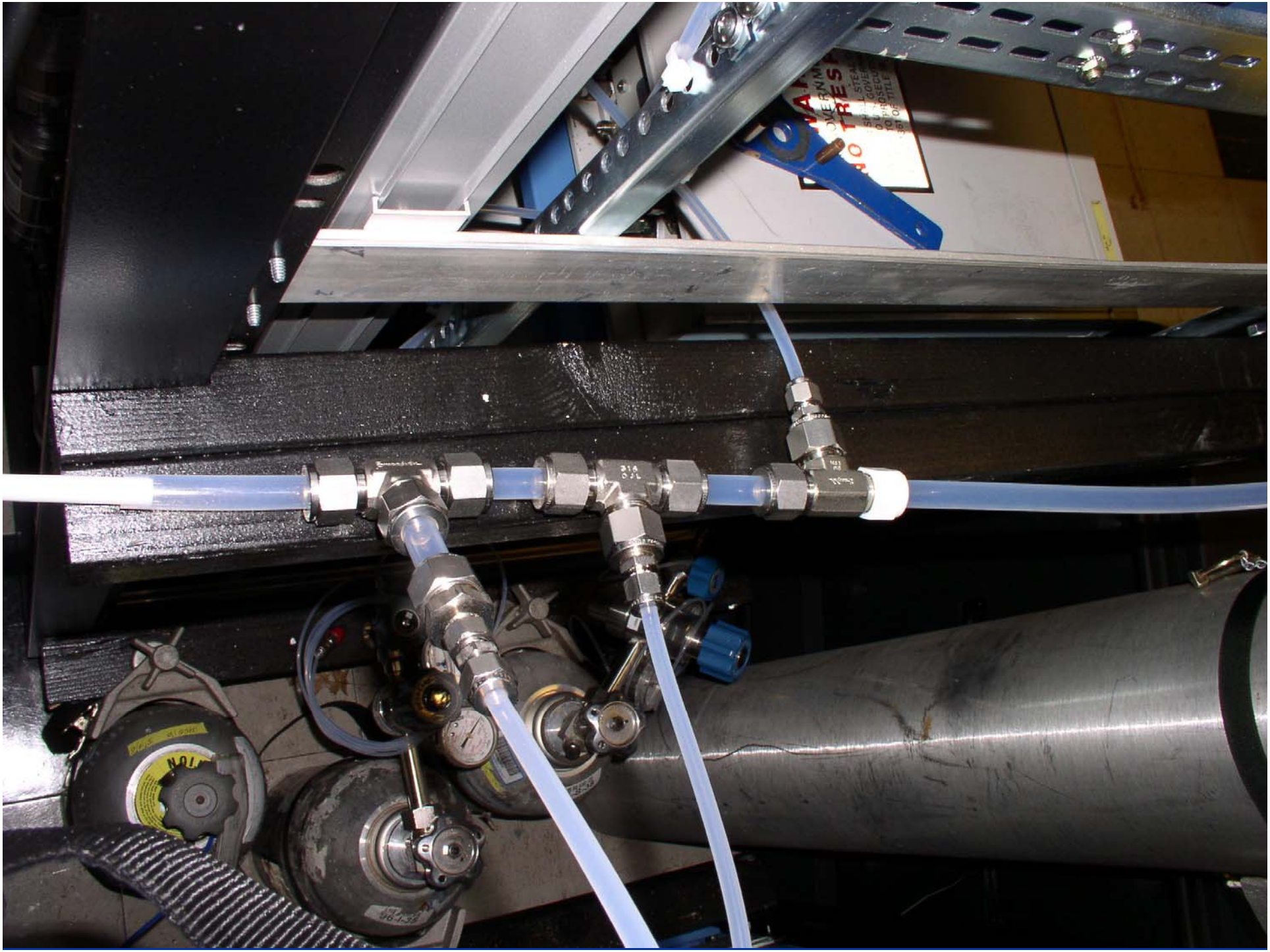

Analytical Equivalency - Ozone

Compact TTP vs. Region 2

TTP O3 (ppm)	NIST SRP O3 (ppm)	% Difference
0.000	-0.001	n/a
0.483	0.483	0.1
0.176	0.176	0.1
0.064	0.063	-1.6
0.000	-0.001	n/a

Analytical Equivalency - CO

Compact TTP vs. Region 2

TTP CO (ppm)	R2 CO Analyzer (ppm)	% Difference
0.02	0.068	n/a
45.27	45.30	0.1
27.90	27.80	-0.4
17.69	17.72	0.2
7.61	7.70	1.2
0.04	0.084	n/a

Analytical Equivalency – SO2

Compact TTP vs. Region 2

TTP SO2 (ppm)	R2 SO2 Analyzer (ppm)	% Difference
0.000	0.000	n/a
0.447	0.454	1.6
0.276	0.276	0.0
0.175	0.175	1.1
0.075	0.075	0.5
0.000	0.001	n/a

Analytical Equivalency – NO

Compact TTP vs. Region 2

TTP NO (ppm)	R2 NO Analyzer (ppm)	% Difference
0.000	0.000	n/a
0.451	0.461	2.2
0.278	0.283	1.8
0.176	0.181	2.7
0.076	0.078	2.2
0.000	0.000	n/a

Analytical Equivalency – NO2

Compact TTP vs. Region 2

TTP NO2 (ppm)	R2 NO2 Analyzer (ppm)	% Difference
0.000	0.000	n/a
0.386	0.395	2.3
0.172	0.175	1.7
0.073	0.076	4.5

Average Converter Efficiency = 101.0%

Smaller Vehicle/Simpler Vehicle

- Run Audit Instruments in Audit Shelter
- Use House Power
- Inverter to power instruments in transit
- Secure Instruments with E-Track

CROSLEY

Thermo Environmental Instruments
Thermo Environmental Instruments
WARNING

xantrex
1000 WATTS
Sine wave inverter 1000

Field Audits w/ Compact System

- 3 NYSDEC Sites

  Syracuse, Georgetown, Albany

- Each site has Ozone and SO2

- One Site Has CO as well

3423

HANDLE WITH CARE
DELICATE UNIT
STAPLE
that w

SONY

RIVER RD
LEBANON
RESERVOIR
CAMPGROUND

TTP/NYSDEC Audit Results – SO2

Audit Point	% Difference @ Syracuse	% Difference @ Georgetown	% Difference @ Albany
High (400 ppb)	0.0	-1.3	0.0
Med (175 ppb)	0.0	1.1	1.7
Low (70 ppb)	2.4	0.3	4.0*

* = High Zero on audited instrument

TTP/NYSDEC Audit Results - Ozone

Audit Point	% Difference @ Syracuse	% Difference @ Georgetown	% Difference @ Albany
High (400 ppb)	0.2	0.2	-0.2
Med (175 ppb)	0.0	0.0	-2.8
Low (70 ppb)	-7.8	-0.5	-6.5
Low (after manifold cleaning)	1.5	n/a*	0.6

* = manifold cleaned immediately prior to audit

HYDRIN
KIMAX C-USCHOT

Further Study

MFC Based Derivation of Multi-Blend Audit Concentrations vs. CO Analyzer Based Determination

- Eliminates need for 3 CO Calibration Tanks
- Eliminates Need for one complete Rack in Monitoring Station
- Audits are 1 hour shorter

Conclusions

- Compact System is analytically equivalent to trailer based system
- Transportation is easier
- Load in/load out in 15-20 minutes
- Maintenance costs are significantly less
- Access to audit sites is much improved
- Requires slightly more technical expertise
- Initial capital expense is less