US EPA ARCHIVE DOCUMENT

UNITED STATES ENVIRONMENTAL PROTECTION AGENCY
REGION IX
75 Hawthorne Street
San Francisco, CA 94105

February 5, 2010

In Reply Refer To: WTR-7

Ron Jacobsen, Environmental Manager
JBS Packerland
651 South 91st Avenue
Tolleson, Arizona 85353-0099

Re: August 14, 2009 Clean Water Act Inspection

Dear Mr. Jacobsen:

Enclosed is the February 5, 2010 report for our August 14, 2009 inspection of JBS Packerland. Please submit a short response to the findings in Sections 2 through 4, to EPA, Tolleson, and ADEQ, by **March 30, 2010**. The main findings are summarized below:

1 JBS Packerland is a significant industrial user discharging to the city sewers under a contract agreement with Tolleson. No permit has been issued establishing local limits, national prohibitions, site-specific requirements, self-monitoring, and bypass prohibitions. The contract agreement loading limits have proven protective since the Tolleson wastewater treatment plant has consistently complied with its NPDES permit.

2 JBS Packerland inconsistently complies with its contract agreement limits. Although treatment is well-operated as designed, with extensive wastewater reuse, the violations indicate that it is at or over capacity. Consistent compliance with current limits can be reached through increased capacity or better attenuation. Installation of anaerobic secondary treatment would greatly increase capacity and produce biogas for energy production.

3 The self-monitoring is representative over the sampling day and the reporting period. Molybdenum and pH should be self-monitored more frequently.

I appreciate your helpfulness extended to me during this inspection. I remain available to the City of Tolleson, and to you to assist in any way. Please do not hesitate to call me at (415) 972-3504 or e-mail at arthur.greg@epa.gov.

Sincerely,

Original signed by:

Greg V. Arthur
CWA Compliance Office

Enclosure

cc: Robert Wilkenson, Pretreatment Inspector, City of Tolleson
Moses Olade, Environmental Hydrologist, ADEQ

US EPA ARCHIVE DOCUMENT

US EPA ARCHIVE DOCUMENT

U.S. ENVIRONMENTAL PROTECTION AGENCY

REGION 9

CLEAN WATER ACT COMPLIANCE OFFICE

NPDES COMPLIANCE EVALUATION INSPECTION REPORT

Industrial User:	JBS Packerland (formerly Swift, Smithfield, Sun Land Beef, etc.) 651 91st Avenue, Tolleson, Arizona 85353-0099 Non-Categorical Significant Industrial User
Treatment Works:	City of Tolleson Tolleson Wastewater Treatment Plant NPDES Permit No. AZ0020338
Pretreatment Program:	City of Tolleson
Date of Inspection:	August 14, 2009

Inspection Participants:

US EPA:	Greg V. Arthur, Region 9, CWA Compliance Office, (415) 972-3504
Arizona DEQ:	Moses Olade, WQ Compliance, Envr Hydrologist, (602) 771-4552 Marcia Colquitt, WQ Compliance Assurance, Mgr, (602) 771-4651
City of Tolleson:	Robert Wilkinson, Pretreatment Inspector, (623) 478-8723
JBS Packerland:	Ron Jacobsen, Environmental Manager, (623) 476-4182 Ray Gamble, Wastewater Operations Supervisor, (623) 476-4194 Morris Sterrett, Water Conservation Coordinator, (623) 476-4177 Jerry Brown, Plant Manager, (623) 936-7177
Keiser Contract Cleaning:	Kevin McDonnell (by telephone on 02/02/10), (608) 568-3413
ChemTreat, Inc:	Michael Tomlinson (by telephone on 02/02/10), (602) 509-0691

Report Prepared By: Greg V. Arthur, Environmental Engineer
February 5, 2010

US EPA ARCHIVE DOCUMENT

1.0 Scope and Purpose

On August 14, 2009, EPA and the City of Tolleson conducted a compliance evaluation inspection of JBS Packerland, in Tolleson, Arizona. The purpose was to ensure compliance with the Federal regulations covering the discharge of non-domestic wastewaters into the sewers. In particular, it was to ensure:

- Classification in the proper Federal categories;
- Application of the correct standards at the correct sampling points;
- Consistent compliance with the standards; and
- Fulfillment of Federal self-monitoring requirements.

JBS Packerland is a significant industrial user ("SIU") within sewer service areas administered by the City of Tolleson whose compliance was assessed as part of an on-going EPA evaluation of industrial users in EPA Region 9 by sector. The inspection participants are listed on the title page. Arthur conducted the inspection.

See Appendix 1 on page 13 for a schematic of the layout and configuration of wastewater handling. Photo documentation of this inspection follows in Section 1.7 on pages 5 and 6.

1.1 Process Description and Background

JBS Packerland is beef packing plant processing roughly 1,900 head of cattle per day. The processing involves cattle yards for receiving, killing floor, fabrication, rendering, and the supporting utilities. JBS Packerland was first built and formerly owned by Swift, purchased by Southwest Cattle in 1979, Sun Land Beef in 1982, Packerland in 1996, Smithfield in 2001, and JBS in 2008. A 1966 agreement between the Swift and the City established the majority funding by Swift of the Tolleson wastewater treatment plant. A 1982 agreement between Sun Land and the City established flow and water quality discharge limitations for the meat packing operations. A 1986 agreement between Sun Land and the City reaffirmed Sun Land's financial responsibility in the Tolleson wastewater treatment plant.

The Tolleson wastewater plant receives sewage from the Tolleson interceptor and skims from Sun City, Surprise, and eastern Phoenix interceptor to the Phoenix 91st Avenue wastewater treatment plant. JBS Packerland contributes non-domestic wastewater to the Tolleson interceptor, accounting for ~10-20% of the organics and solids loads to the Tolleson wastewater plant. The Tolleson wastewater plant provides secondary treatment for reclaim by the Palo Verde nuclear power plant or discharge to the Salt River. The processes include headworks, primary sedimentation, trickling filters, activated sludge contact, secondary clarification, chlorination, dechlorination, belt filtration of solids, anaerobic digestion, and sludge drying beds. The Tolleson wastewater treatment plant operates under NPDES Permit AZ0020338.

1.2 Facility SIC Code

JBS Packerland is assigned the SIC code for meat packing plants (SIC 2011).

US EPA ARCHIVE DOCUMENT

1.3 Facility Wastewater Sources

The meat packing operations and the support operations generate a number of non-domestic wastewaters including cattle yard drainage, slaughterhouse by-products, plant and equipment wash down, sanitation drainage, and utilities wastewaters.

Specifically, the cattle yards generate manure, yard drainage, and operational wash down. The killing floor generates paunch manure, blood, tripe water, plant and equipment operational washdown, and sanitation wash down. The fabrication operations involves bone cutting and generates operational drainage wash down and sanitation wash down. The rendering plant generates floor wash down. Sanitation work occurs under contract with an outside vendor from 6:00p to 7:00a. The sanitation work generates wash down, mop waters, and spent cleaners from alkaline soap cleaning, phosphoric acid cleaning, and chlorinated disinfection of the plant and equipment. The plant utilities generate blowdown and bleeds from boilers, softeners, and eight cooling towers, all serviced under contract by an outside vendor. The chemical additives expected in the bleeds and blowdown include cooling tower molybdate scale inhibitor, hypochlorite and bromochlorine isothiazoline biocides, boiler polymer scale inhibitor, and alkali metal orthophosphate hardness control.

There is one main non-domestic connection to the sewers that receives contributions from the industrial wastewater treatment plant ("IWTP"). The discharge is regulated under an original 1982 agreement signed between Sun Land Beef and Tolleson. The compliance sampling point is designated for the purposes of this report as IWD-JBS1.

1.4 Facility Process Wastewater Handling

Discharge – Process wastewaters from JBS Packerland drain through a single sewer connection into the Tolleson domestic sewers. The sample point is designated here as IWD-JBS1. ***See*** Photo #10 in Section 1.7 on page 6.

Composition - The process-related wastewaters listed in section 1.3 above would be expected to contain organics, solids, oil and grease, molybdenum, highly variable pHs, and trace levels of the sanitation cleaners and the boiler and cooling tower additives.

Delivery – Operational wash downs, sanitation wash downs, blowdowns, bleeds, drainage, and the entrained solids are hard-plumbed delivered to an in-plant sewer system that feeds into the IWTP. The cattle yard is cement lined and graded to a drain channel leading to a pit for delivery to the treatment unit. The killing floor collects blood and paunch manure to separate sewer systems for separate delivery of solids to rendering.

Treatment – The cattle yard drainage is pumped from the collection pit through a hydrosieve to the in-plant sewer. Killing floor drainage is segregated into three streams. Blood drains into a blood sewer for rotoscreening and delivery to the in-plant sewer. Paunch manure, tripe water, and paunch washdown drain into a sewer for filter screening and delivery to the in-plant sewer. Other killing floor washdown drains without pretreatment into the in-plant sewer. Fabrication washdown splits with some through rotoscreening and delivery to a

wash-down reclaim tank and some drained to the in-plant sewer. Cooling tower bleeds drain to the same washdown reclaim tank. All other plant and utility washdowns and drainages drain to the in-plant sewer. ***See*** Photos #1 to #3 in Section 1.7 of this report on pages 5.

The collected flows in the in-plant sewer combine in the influent raw wet pit for pumped delivery through the IWTP. The treatment steps comprise a large rotoscreen, two small hydrocyclones, a 263,000 gallon aerated surge tank, and chemically-aided induced air flotation ("IAF"), for discharge to the sewers through an effluent flume, which is designated as the compliance sample point, IWD-JBS1. The solids removal through the IAF involves, variable feed, nozzle-injected air, both anionic and cationic polymer flocculation, and ferric sulfate coagulation. ***See*** Photos #4 to #10 in Section 1.7 of this report on pages 5 and 6.

Collected solids from the blood sewer rotoscreen are dried for off-hauling as product. The solids removed by the other rotoscreens, hydrosieves, and hydrocyclones are collected for off-site non-hazardous landfill disposal or on-site rendering. The IAF float solids are collected into a sludge holding tank for off-site agriculture injection reuse. In-house records for July 2009 indicate that JBS Packerland generates on average 290,000 lbs/day float solids, 56,000 lbs/day paunch manure, and 23,000 lbs/day barn wastes.

1.5 Sampling Record

JBS Packerland self-monitors each workday as required by the City of Tolleson.

1.6 POTW Legal Authorities

Chapter 11 of the Tolleson city code establishes provisions for the discharge into the Tolleson sewers. These provisions establish city permitting authority (§11-2-2) and include allowable limits for BOD, TSS, pH, a flow that may be applied in a city permit (§11-3-1). The city code establish narrative prohibitions on discharges that cause interference or pass-through of the Tolleson sewerage works (§11-1-5) and establishes numerical local limits.

The ordinance allows special agreements between industrial or outside jurisdictions to supersede the permit provision (§11-4-5). As a result, discharge from JBS Packerland is regulated under a March 29, 1982 Agreement and Consent to Contract Assignment signed between Sun Land Beef and Tolleson.

US EPA ARCHIVE DOCUMENT

1.7 Photo Documentation

Ten of the 13 photographs taken during this inspection are depicted below and saved as *jbspackerland-01.jpg to -04.jpg, -05a.jpg and -05b.jpg, -06.jpg to -12.jpg.*

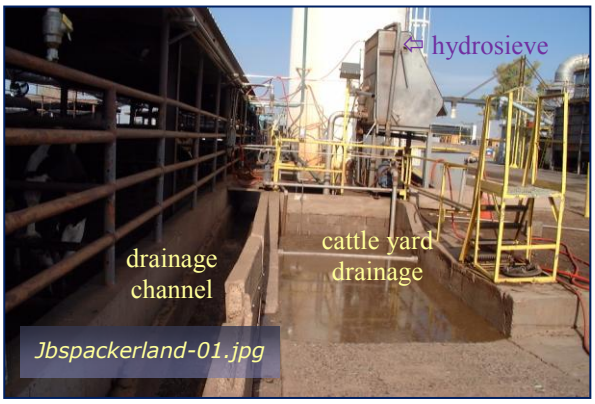

Photo #1: Cattle Yard - WW Collection and Delivery
Taken By: Greg V. Arthur
Date: 08/14/09

Photo #2: Paunch Manure WW Screen and Delivery
Taken By: Greg V. Arthur
Date: 08/14/09

Photo #3: Fabrication WW Rotoscreen
Taken By: Greg V. Arthur
Date: 08/14/09

Photo #4: IWTP Influent Raw Wet Pit
Taken By: Greg V. Arthur
Date: 08/14/09

Photo #5: IWTP Rotoscreen
Taken By: Greg V. Arthur
Date: 08/14/09

Photo #6: IWTP Hydrocyclones
Taken By: Greg V. Arthur
Date: 08/14/09

US EPA ARCHIVE DOCUMENT

Additional photographs taken during this inspection are depicted below.

Photo #7: IWTP Aerated Surge Tank
Taken By: Greg V. Arthur
Date: 08/14/09

Photo #8: IWTP Induced Air Flotation Unit (top)
Taken By: Greg V. Arthur
Date: 08/14/09

Photo #9: IWTP Induced Air Flotation (sideview)
Taken By: Greg V. Arthur
Date: 08/14/09

Photo #10: IWTP Effluent Flume (IWD-JBS1)
Taken By: Greg V. Arthur
Date: 08/14/09

US EPA ARCHIVE DOCUMENT

2.0 Sewer Discharge Standards and Limits

Federal categorical pretreatment standards (where they exist), national prohibitions, State groundwater, and the local limits (where they exist) must be applied to the sewered discharges from industrial users. (40 CFR 403.5 and 403.6).

Summary

No Federal categorical pretreatment standards apply to the discharge from JBS Packerland to the Tolleson sewers, and Tolleson has not issued a permit that applies the specific local limits from the ordinance. Instead, three sets of limits apply: (1) the national prohibitions in 40 CFR 403.5 for all non-domestic discharges into publicly-owned treatment works, (2) the narrative provisions of the Tolleson city ordinance that implement without a permit, and (3) the provisions of a 1982 contract agreement between Tolleson and a predecessor of JBS Packerland that establishes site-specific discharge quality and quantity limits. According to Tolleson, the City also has assigned the local limit for selenium under the contract provisions. The application of Federal categorical standards, national prohibitions, local limits, and contract provisions was determined through visual inspection. ***See*** Appendix 2 on page 14 of this report for the applicable limits.

Requirements

- None.

Recommendations

- A permit should be issued that establishes site-specific requirements, national prohibitions, local limits, self-monitoring requirements, and bypass and upset prohibitions.

2.1 Classification by Federal Point Source Category

JBS Packerland does not qualify for regulation under any of the Federal categorical pretreatment standards in 40 CFR 403-471. JBS Packerland qualifies as a significant industrial user under the definitions in 40 CFR 403.3 because the discharge flow rates and pollutant loadings are great enough to pose a risk of adversely impacting the municipal sewerage works. Significant industrial users are required to self-report at least twice per year on their compliance with permit requirements.

2.2 Local Limits, National Prohibitions, and Site-specific Limits

Local limits and the national prohibitions are meant to express the limitations on non-domestic discharges necessary to protect the sewers, treatment plants and their receiving waters from adverse impacts. In particular, they prohibit discharges that can cause the pass-through of pollutants into the receiving waters or into reuse, the operational interference of the sewage treatment works, the contamination of the sewage sludge, sewer worker health

US EPA ARCHIVE DOCUMENT

and safety risks, fire or explosive risks, and corrosive damage to the sewers. The national prohibitions apply nationwide to all non-domestic sewer discharges. The Tolleson local limits apply to non-domestic discharges in the service area of the Tolleson wastewater treatment plant, although the ordinance also allows special agreements to supersede. As a result, a 1982 contract establishes site-specific requirements for discharge from JBS Packerland to the sewers for BOD loading, TSS loading, and flow, and has allowed Tolleson to also assign, without issuing a permit, a specific local limit for selenium.

2.3 Federal Prohibitions

The Federal standards in 40 CFR 403.17 prohibit the bypassing of any on-site treatment necessary to comply with standards unless the bypass was unavoidable to prevent the loss of life, injury, or property damage, and there were no feasible alternatives. This provision explicitly prohibits bypasses that are the result of a short-sighted lack of back-up equipment for normal downtimes or preventive maintenance. It also explicitly prohibits bypasses that could be prevented through wastewater retention or the procurement of auxiliary equipment. It specifically allows bypasses that do not result in violations of the standards as long as there is prior notice and approval from the sewerage agency or State.

2.4 Compliance Sampling and Point(s) of Compliance

The 1982 contract does not identify the effluent flume as the compliance sampling point (designated in this inspection report as IWD-JBS1). Local limits, site-specific contract limits, and the national prohibitions all apply end-of-pipe to non-domestic flows. The sample point IWD-JBC1 is a suitable end-of-pipe sample point representative of the day-to-day non-domestic wastewater discharges from JBS Packerland. The 1982 contract does specify the sampling protocols as 24-hour composite sampling for BOD and TSS. ***See*** Section 4.0 on page 12 and Appendix 3 on page 15.

US EPA ARCHIVE DOCUMENT

3.0 Compliance with Local Limits, National Prohibitions And Site-Specific Contract Agreement Limits

All non-domestic wastewater discharges to the sewers must comply with local limits and the national prohibitions. 40 CFR 403.5(a,b,d).

Industrial users must comply with the provision restricting the bypass of treatment necessary to comply with any pretreatment standard or requirement. 40 CFR 403.17(d).

The sample record indicates that JBS Packerland consistently complies with its site-specific contract agreement limits for TSS loading but not discharge flow rate and BOD loading. The sample record indicates inconsistent compliance with the selenium local limit. The sample record did not include any more than isolated sample results for pH, other metals, cyanide, toxic organics, dissolved sulfides, oil and grease, or for any of the other local limits established by the City of Tolleson. ***See*** Appendices 3 and 4 on pages 15 and 16 of this report.

Requirements

- JBS Packerland must reduce the peak daily BOD loadings or renegotiate the contract loading limits with the City.
- JBS Packerland must reduce the peak daily discharge flow rates.

Recommendations

- On-site anaerobic secondary treatment would greatly reduce loadings into the sewers and provide an opportunity to produce significant amounts of biogas for energy production.
- All sources of selenium-bearing wastewaters should be identified.

3.1 National Objectives

The general pretreatment regulations were promulgated in order to fulfill the national objectives to prevent the introduction of pollutants that:

(1) cause operational interference with sewage treatment or sludge disposal,
(2) pass-through sewage treatment into the receiving waters or sludge,
(3) are in any way incompatible with the sewerage works, or
(4) do not improve the opportunities to recycle municipal wastewaters and sludge.

This inspection did not include an evaluation of whether achievement of the national objecttives in 40 CFR 403.2 have been demonstrated fully by the Tolleson wastewater treatment plants through consistent compliance with their sludge and discharge limits. However, the Tolleson wastewater treatment plant for the most part has maintained consistent compliance with its NPDES permit limit for BOD, TSS, pH, metals, inorganics, and toxicity for the past

US EPA ARCHIVE DOCUMENT

two-years in 2008 and 2009. The only violations reported in the EPA PCS database were isolated results for biotoxicity (1 in 24 samples), monthly-average copper loading (1 in 24 months), and pH (1 in 520 measurements).

3.2 Sampling Results

The two-year sample record consists of workday self-monitoring for TSS, BOD, and discharge flow rate, and isolated samples for selenium and oil and grease. All samples collected through IWD-JBS1 were 24-hour composites.

JBS Packerland is designed and operated with the primary treatment removal of solids of all non-process wastewater discharges to the sewers. As a result, the sampling results for IWD-JBS1 consistently comply with contract limits for TSS. The sampling results do not consistently comply with BOD or discharge flow rate. The average and calculated 99th% peak monitoring results were 1,272 and 3,101 lbs/day TSS, 6,473 and 11,452 lbs/day BOD, and 0.61 and 1.04 million gallons per day discharge flow.

These sampling results indicate that the statistical probabilities of violating any one of the contract agreement limits are essentially 3+ % for any workday. So although the treatment in-place was found to be operated as designed, the violation rates are an indication that it is at capacity or slightly over capacity. As a result, consistent compliance with the contract limits would not be expected from the existing treatment in-place unless either the production or water usage or both (1) drop on average, or (2) become more consistent day-to-day. There are also a number of ways to increase capacity through the expansion of treatment, including adding an additional IAF unit or an anaerobic secondary treatment step. The good aspects of (+) and deficiencies with (-) wastewater handling are summarized below.

+ The Tolleson wastewater treatment plant consistently complied with its NPDES permit.
+ All pollutants sources were identified and treated prior to discharge.
+ Good control and segregated handling of wastewater sources.
+ Treatment in-place is well-operated as designed.
+ Extensive reuse of wastewaters on-site.
- Treatment in-place is at or over capacity
- Less than 24-hours of surge capacity does not fully attenuate peaks through flotation.
- Molybdenum-based cooling tower additives can impact the Tolleson treatment plant.

3.3 Local Limits for Oxygen Demanding Pollutants and The National Prohibition Against Interference

<u>High-Strength Organics</u> - The process-related wastewaters discharged to the sewers are not expected to be high enough in organics strength to pose a risk of treatment interference since the Tolleson wastewater treatment plant was designed to handle packing plant wastewaters from JBS Packerland. However, the organics strength is high enough to potentially produce septic conditions in the sewers. ***See*** Section 3.5 on the next page.

US EPA ARCHIVE DOCUMENT

US EPA ARCHIVE DOCUMENT

Metals, Cyanide, Toxics – There are no sample results for the toxics pollutants that could cause an operational interference of the Tolleson sewerage works, thereby resulting in violations of the NPDES permit for Tolleson. However, primary treated packing plant discharges would not be expected to contain metals or cyanide at levels approaching the local limits. There is no evidence that discharges from JBS Packerland have resulted in any interference.

3.4 Local Limits for Toxic Metals, Cyanide, and Other Pollutants and The National Prohibition Against Pass-Through

Metals and Cyanide – Primary treated packing plant wastewaters would not be expected to contain metals, cyanide, or other toxic pollutants at levels approaching the local limits. Moreover, there is no evidence that discharges from JBS Packerland resulted in the pass-through of any toxic pollutants from the Tolleson wastewater treatment plant to the receiving waters or sludge, thereby causing violations of the NPDES permit for Tolleson. As a result, with the exception of a handful of selenium samples, there are no sample results for any of the toxics that could pass-through. However, two toxic pollutants have the potential to pass-through.

- Selenium - The selenium sample results at times exceed both the method detection limit and the Tolleson local limit. However, the selenium sampling is inconclusive without the identification of the source or sources.

- Molybdenum - There are no local limits or sample results for molybdenum. Cooling tower additives are an identified source from JBS Packerland and cooling towers in general are the principle source of molybdenum in municipal treatment plant sludges.

Oil and Grease – There are no local limits for oil and grease.

3.5 Local Limits for pH and Sulfides, and The National Prohibitions Against Safety Hazards and Corrosive Structural Damage

Corrosion - Sewer collection system interferences related to the formation of hydrogen sulfide and the resulting acidic disintegration of the sewers are possible since the discharges from JBS Packerland are high-strength enough in biodegradable organics to allow the formation of septic conditions in the sewers. Moreover, the untreated-for-pH discharges include night shift sanitation wastewaters generated by the use of alkaline and acidic cleaners. For these reasons, the discharge should be self-monitored continuously for pH.

Flammability - Flammability would not be expected because sampling shows that the discharges to the sewer entrain negligible amounts of volatile organics.

3.6 Bypass Provision

There were no observed methods of bypassing at JBS Packerland. In particular, all waste streams are delivered to treatment and discharge through the identified sample point.

4.0 Compliance with Federal Monitoring Requirements

Significant industrial users must self-monitor for all regulated parameters at least twice per year unless the sewerage agency monitors in place of self-monitoring. 40 CFR 403.12(e) & 403.12(g).

Each sample must be representative of the sampling day's operations. Sampling must be representative of the conditions occurring during the reporting period. 40 CFR 403.12(g) and 403.12(h).

Permit Requirements – JBS Packerland has successfully fulfilled the self-monitoring requirements set forth in the contract agreement. Over the a recent two year period, the sample record for the main discharge point, IWD-JBS1, shows that JBS Packerland (1) generated sample results for all listed parameters at the frequencies set forth in the contact agreement, (2) collected all samples from the designated compliance sampling point, and (3) correctly obtained 24-hour composites for conventional pollutants and metals. It was not determined in this inspection whether appropriate chain-of-custody procedures were followed.

Representativeness – The sample record for IWD-JBS1 appears to be representative of the main discharge to the sewers over the sampling day and the six-month reporting period. However, continuous self-monitoring for pH should be instituted given the high-strength nature and variable-by-shift quality of the discharge which is untreated for pH. In addition, self-monitoring should further extend to molybdenum since the reuse of the cooling tower bleeds as make-up waters by JBS Packerland is likely a significant identified source of molybdenum into the Tolleson wastewater treatment plant.

Requirements

- ***See*** Appendix 2 on page 14 of this report for the self-monitoring and city monitoring requirements for that would be considered to be representative of the discharge.

Recommendations

- Self-monitoring reports should include a summary of the chemical additives and cleaners used during the reporting period.

- ***See*** Sections 3.0 and 3.5 on pages 9 and 11 of this report for findings regarding self-monitoring for pH.

US EPA ARCHIVE DOCUMENT

Appendix 1
JBS Packerland - Configuration and Layout

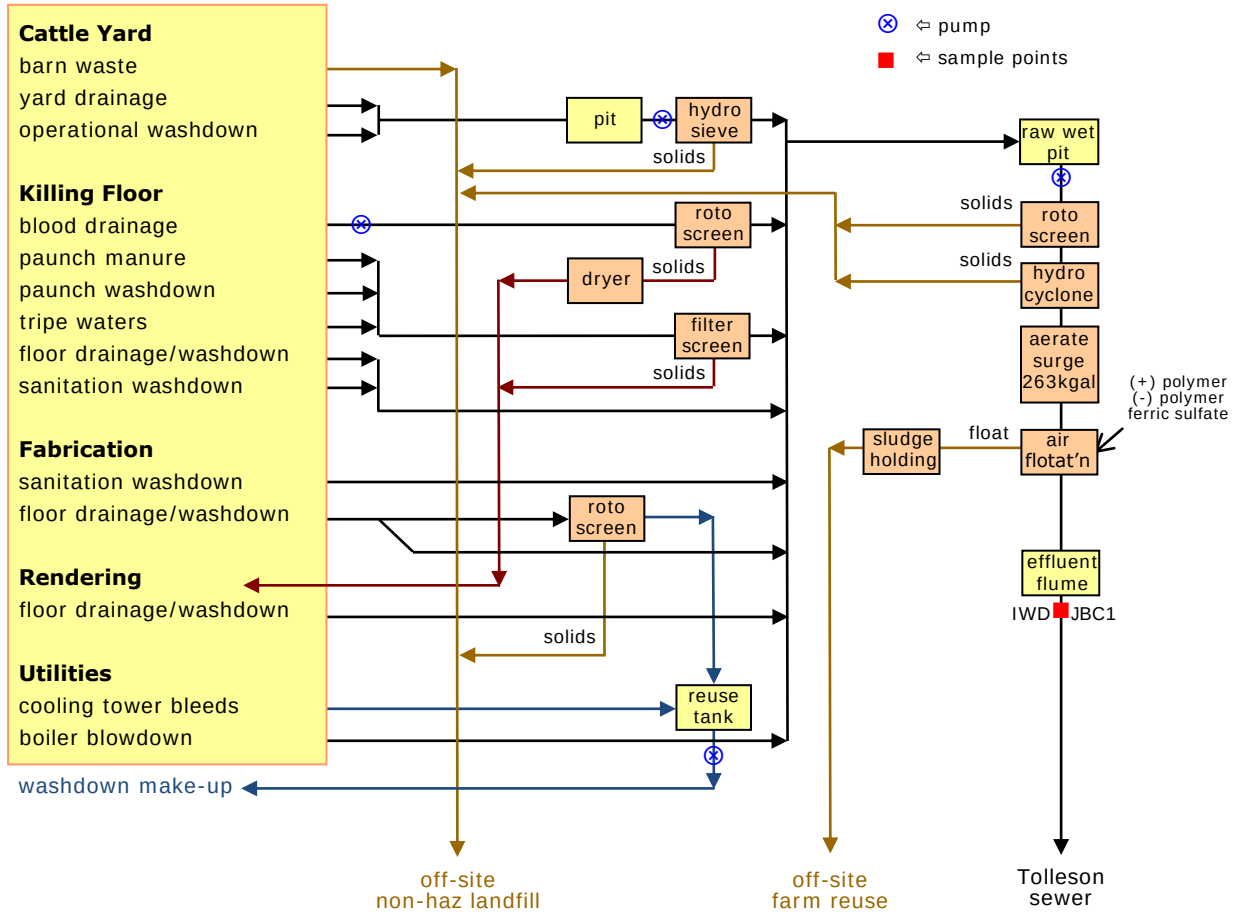

US EPA ARCHIVE DOCUMENT

Appendix 2
Sewer Discharge Standards and Limits for JBS Packerland @ IWD-JBS1

Pollutants of concern	Federal standards (d-max)	contract limits (d-max)	national prohibition (instant)	local limits (inst/dmax)	monitoring frequency discharger	city
flow (gpd)	-	800,000	-	⑦ 2%	1/workday	-
BOD (lbs/day)	-	10,600	-	-	1/workday	-
TSS (lbs/day)	-	6,912	-	-	1/workday	-
arsenic (µg/l)	-	-	-	⑧ 50	①	①
cadmium (µg/l)	-	-	-	⑧ 2.75	①	①
copper (µg/l)	-	-	-	⑧ 64.8	①	①
cyanide (µg/l)	-	-	-	⑧9.7	①	①
lead (µg/l)	-	-	-	⑧10.3	①	①
molybdenum (µg/l)	-	-	-	-	1/month	1/year
selenium (µg/l)	-	-	-	⑧ 2	1/month	1/year
silver (µg/l)	-	-	-	⑧ 13.4	①	①
pesticides	-	-	-	⑩	①	①
BOD (mg/l)	-	-	-	⑧ 250	1/workday	1/year
TSS (mg/l)	-	-	-	⑧ 250	1/workday	1/year
oil and grease (mg/l)	-	-	-	-	1/month	1/year
dissolved sulfides (mg/l)	-	-	-	0.1	①	1/year
residual chlorine (mg/l)	-	-	-	⑥ 0.05	①	①
pH (s.u.)	-	-	<5.0	6.0-9.0	continuous	1/year
explosivity	-	-	<140°F ⑤	<140°F ⑤	①	①
TDS (mg/l)	-	-	-	-	1/month	1/year
narrative limits	②	-	③	④	n/a	n/a

① As part of periodic priority pollutant scans in order to identify changes in discharge quality.
② The bypass provision in 40 CFR 403.17.
③ The national prohibitions in 40 CFR 403.5.
④ Chapter §11 of the City code establishes the narrative prohibitions as listed in 40 CFR 403.5.
⑤ Closed-cup flashpoint.
⑥ Residual chlorine at the wastewater treatment plant resulting from discharges of excess disinfection.
⑦ Discharges less than 2% of the wastewater treatment plant average daily discharge.
⑧ Chapter §11 of the Tolleson city code can implement these limits upon permit issuance.
⑨ Recommended reductions in green. Recommended increases in red.
⑩ Non-detection.

US EPA ARCHIVE DOCUMENT

Appendix 3
Wastewater Discharge Quality for JBS Packerland @ IWD-JBS1

Sample Record Summary for IWD-JBS1 (01/01/08-08/31/09)

pollutants	effluent sampling results				violation rate			sample count
	mean	99th%	min	max	d-max	mo-av	instant	
BOD (mg/l)	1091.1	1745.8	24	2220	n/a	n/a	n/a	444
BOD Loading (lbs/day)	6472.7	11452.1	148	18981	15/444	n/a	n/a	444
TSS (mg/l)	214.5	502.3	52	1020	n/a	n/a	n/a	443
TSS Loading (lbs/day)	1271.5	3100.7	192	6212	0/443	n/a	n/a	443
Flow (mgd)	0.610	1.038	0.228	1.478	16/544	n/a	n/a	554
Selenium (µg/l)	8.2	40.0	<0.7	55.0	①	n/a	n/a	25
Oil and Grease (mg/l)	②	②	21	1530	①	n/a	n/a	5

① Tolleson requires self-monitoring but has not issued a permit with these limits.
② No sample statistics because too few samples and bimodal distribution.

US EPA ARCHIVE DOCUMENT

Appendix 4
Wastewater Discharge Violations for JBS Packerland @ IWD-JBS1

Contract Limits Violations (01/01/08-08/31/09)

sample dates	type	sampler	point	Fed standards / local limits		viols	days
05/19/08	24-h	IU	JBS1	discharge flow d-max	0.800	0.834	1
05/21/08	24-h	IU	JBS1	discharge flow d-max	0.800	0.963	1
05/27/08	24-h	IU	JBS1	discharge flow d-max	0.800	1.054	1
05/21/08	24-h	IU	JBS1	BOD loading d-max	10621	11088	1
05/29/08	24-h	IU	JBS1	discharge flow d-max	0.800	1.002	1
07/10/08	24-h	IU	JBS1	discharge flow d-max	0.800	1.043	1
07/11/08	24-h	IU	JBS1	discharge flow d-max	0.800	1.145	1
07/11/08	24-h	IU	JBS1	BOD loading d-max	10621	12132	1
09/10/08	24-h	IU	JBS1	discharge flow d-max	0.800	1.118	1
09/10/08	24-h	IU	JBS1	BOD loading d-max	10621	13052	1
09/17/08	24-h	IU	JBS1	discharge flow d-max	0.800	0.879	1
12/15/08	24-h	IU	JBS1	BOD loading d-max	10261	11229	1
12/16/08	24-h	IU	JBS1	discharge flow d-max	0.800	1.478	1
12/16/08	24-h	IU	JBS1	BOD loading d-max	10261	18981	1
12/17/08	24-h	IU	JBS1	discharge flow d-max	0.800	0.890	1
12/17/08	24-h	IU	JBS1	BOD loading d-max	10261	11284	1
12/18/08	24-h	IU	JBS1	discharge flow d-max	0.800	0.930	1
12/18/08	24-h	IU	JBS1	BOD loading d-max	10261	16604	1
12/19/08	24-h	IU	JBS1	BOD loading d-max	10261	11300	1
12/23/08	24-h	IU	JBS1	discharge flow d-max	0.800	0.903	1
12/26/08	24-h	IU	JBS1	discharge flow d-max	0.800	1.129	1
12/26/08	24-h	IU	JBS1	BOD loading d-max	10261	14408	1
12/30/08	24-h	IU	JBS1	BOD loading d-max	10261	10837	1
01/06/09	24-h	IU	JBS1	discharge flow d-max	0.800	1.078	1
01/14/09	24-h	IU	JBS1	discharge flow d-max	0.800	0.974	1
01/17/09	24-h	IU	JBS1	BOD loading d-max	10261	11025	1
05/06/09	24-h	IU	JBS1	BOD loading d-max	10261	10929	1
05/12/09	24-h	IU	JBS1	BOD loading d-max	10261	13690	1
07/10/09	24-h	IU	JBS1	BOD loading d-max	10261	13560	1
07/31/09	24-h	IU	JBS1	BOD loading d-max	10261	13469	1
08/13/09	24-h	IU	JBS1	discharge flow d-max	0.800	0.881	1
						total days of violation	**31**

Statistical Violation Probabilities (01/01/08-08/31/09)

violation probability	mean (µg/l)	std dev (µg/l)	statistical probability	percent
Contract – BOD Load (lbs/day)	µ = 6472.7	σ = 2137.1	α(10621) = 0.0261	~3%
Contract – Flow (mgd)	µ = 0.6104	σ = 0.1837	α(0.800) = 0.1443	~14% ①

① Bimodal distribution overestimates σ resulting in overestimated normal violation probability α.

US EPA ARCHIVE DOCUMENT