US EPA ARCHIVE DOCUMENT

US EPA ARCHIVE DOCUMENT

Note to Reader: The U.S. Navy's Apra Harbor Wastewater Treatment Plant at the Naval Base Guam is regulated under the Clean Water Act as a direct discharge that is controlled by an NPDES permit (No. GU0110019) and 40 CFR Part 122. The pretreatment requirements at 40 CFR Part 403 do not apply because the Navy does not discharge to a publicly owned treatment works. Nevertheless, many of the industrial operations at the Naval Base Guam and the Guam Shipyard, that contribute into the Apra Harbor WWTP collection system are similar to those covered by the pretreatment program and this inspection report is provided on this pretreatment web site for the convenience of the reader.

September 7, 2010 EPA Inspection Report

UNITED STATES ENVIRONMENTAL PROTECTION AGENCY
REGION IX
75 Hawthorne Street
San Francisco, CA 94105

September 7, 2010

In Reply Refer To: WTR-7

CAPT Peter S. Lynch
Commander NAVFAC Marianas
PSC 455, Box 195
FPO AP 96540-2937

Re: April 26 to May 7, 2010 Clean Water Act Inspection

Dear CAPT Lynch:

Enclosed is the September 7, 2010 report for our April 26 to May 7, 2010 comprehensive inspection of the Apra Harbor Wastewater Treatment Plant, its sewer collection system, and its service area industrial wastewater sources. Please submit a short response to the findings in Sections 2 through 6 of this report to EPA and Guam EPA, by **October 30, 2010**. An Executive Summary can be found in Section 1.4 on page 8.

We found that the Navy appropriately responded to the November 2008 EPA Finding of Violation. Storm water activities were found already revised and implemented. Infrastructure rehabilitation was already assessed, scoped, funded and begun. Source controls were identified and evaluated. This report identifies the remaining tasks necessary to restore the Apra Harbor Wastewater Treatment Plant to full compliance. These remaining tasks outlined below comprise the expected conditions of the Federal Facilities Compliance Agreement.

- The Phase I upgrades to the wastewater treatment plant and the main sewer pump station authorized under MILCON P-262 should be completed by October 2010.
- The Phase I upgrades to construct, replace or rehabilitate sewer lines, relief sewers, pump stations, manholes, and force mains authorized under MILCON P-534 should be completed by December 2011. These upgrades should cover rehabilitation of all CHT risers.
- The Phase II and Phase III additional upgrades to the sewer collection system to be authorized under MILCON P-535 should be funded and scheduled.
- Uncovered drainages that add to the inflow should be covered or blocked during storms.
- Repair of the pump station serving the floating dry dock must be completed before the restart of dry dock operations.
- The installation of a corrosion inhibitor chemical injection facility at the water treatment plant authorized under MILCON P-256 should be completed by December 2010.
- Monthly monitoring of the receiving waters, treatment plant influent, CHT ships sanitary, and the 22+ Naval Base Guam and 5+ Guam Shipyard industrial sources should start.

US EPA ARCHIVE DOCUMENT

- Joint Region Marianas should revise the COMNAVREG Marianas Instructions to set internal wastewater discharge limits, and to implement a sewer discharge certification program that applies to all sources into the Apra Harbor WWTP.

- The sewer discharge certification program should result in determinations of BAT treatment or equivalence for each industrial wastewater source, updates of the industrial wastewater inventory, issuance of certificates to all non-domestic discharges, inspections of each certified source at least annually, and submittal of an annual report.

- It should be determined whether solids removal efficiencies could be improved at the Victor Wharf BOWTS and the FISC Fuel Reclamation System, and if in-line caustic preconditioning of CHT ships sanitary wastewaters would increase metals removals.

We may need language from you that NAVFAC can agree to in order to set requirements in the FFCA for the completion of unfunded MILCONs, in particular for MILCON P-535 for the Phases II and III collection system rehabilitation. Otherwise we would be arbitrarily setting compliance deadlines.

I appreciate the helpfulness of the staff from each of the commands extended to me during this inspection. We remain available to the Navy, Guam EPA, and the Guam Shipyard to assist in any way. Please do not hesitate to call me or have your staff call me at (415) 972-3504, or e-mail arthur.greg@epa.gov.

Sincerely,

Greg V. Arthur
CWA Compliance Office

cc: Ivan Quinata, GEPA
Mathews Pothen, Guam Shipyard

US EPA ARCHIVE DOCUMENT

US EPA ARCHIVE DOCUMENT

U.S. ENVIRONMENTAL PROTECTION AGENCY

REGION 9

CLEAN WATER ACT COMPLIANCE OFFICE

NPDES COMPLIANCE EVALUATION INSPECTION

Report No. 1

NPDES Permittee:	United States Navy Apra Harbor Wastewater Treatment Plant (NPDES Permit No. GU0110019)
Facility No.1	Naval Base Guam • Orote Point/Apra Harbor Main Base • Polaris Point Submarine Operations • Sasa Valley Fuel Farm and Fueling Depot Piers • Naval Base Guam Port Operations • Navy Water Treatment Plant
Facility No.2	Guam Shipyard • Shipyard Shops and Pier Services • Floating Dry Dock (AFDB-8)

Dates of Inspection	April 26-30 and May 6-7, 2010 - On-Site Inspections May 6 - Guam Shipyard Close-out Interview May 7 - Naval Base Guam Close-out Interview

---

Inspected Facilities

Sewerage Works:	Apra Harbor Wastewater Treatment Plant (April 26) Naval Base Guam Port Operations (April 28, May 6) Guam Shipyard Pier Services (May 6)
Service Area Sources: (Naval Base Guam)	Victor Wharf Bilge Oily Water Treatment System (April 26) Bldg 1790 Hazardous Waste Conforming Storage Facility (April 26) Bldg 1770 Bioremediation Storage Site (April 26) Bldgs 364, 372, 374, 375 Transportation Motor Pool (April 26) Bldg 307 Orote Power Plant (April 28) Bldgs 563, 557A/C/D, Camp Covington, Vehicle Shops (April 28)

Service Area Sources (Naval Base Guam)	Polaris Point Bilge Oily Water Treatment System (April 28) Bldg 2113/4 Explosives Ordinance Disposal Compound (April 28) Bldg 4907 Demineralizer Plant (April 28) Bldg 4451 Steam Plant (April 28) Bldg 4430 Shore Repair Facility (April 28) Bldg 1700 Sasa Valley Fuel Farm (April 28) Fena Water Treatment Plant (April 29) Bldg 585 Laboratory (April 29) Bldg 257 Navy Exchange Autoport (April 29) Wharves A/B/K/S/T/U/V/X and D/E Fueling Piers (April 28 / May 6)
Service Area Sources: (Guam Shipyard)	Bldg 20 Machine and Mechanical Shops (April 27) Bldg 21 Structural Shops (April 27) Bldg 2063 Former Fiberglass Boat Repair Shop (April 27) Bldg 2078 Compressor Plant (April 27) Bldg 22 Paint Shop (April 27) Bldg 100 Media Blasting Shop (April 27) AFDB-8 Floating Drydock (April 27) Wharves L/M/N/O/P/Q and Finger Piers (April 27 / May 6)

Inspection Participants:

US EPA:	Greg V. Arthur, CWA Compliance Office, (415) 972-3504
Guam EPA:	Ivan Quinata, Chief Engineer, (671) 475-1602 Lorilee Crisostomo, Administrator, (671) 475-1658 Bradley Dunagan, Deputy Administrator, (671) 475-1622 Maricar Quezon, Engineer II, (671) 475-1601 Oscar Delfin, Engineer III, (671) 475-1645 Noel Cruz, Engineer II, (671) 475-1605
USN Naval Base Guam: (NAVFAC Marianas)	CAPT Peter Lynch, Commanding Officer, (671) 339-5100 CDR Keith Barton, Assistant Operations Officer, (671) 333-2162 CDR Matt Suess, Executive Officer, (671) 339-5101 CDR Donald Brus, Operations Officer, (671) 349-4260 LCDR Laurie Scott, Assistant Regional Engineer, (671) 339-3340 Maria Lewis, Integrated Product Team, EPS, (671) 339-4535 Rolfe Banes, Integrated Product Team, (671) 339-2360 Steven Jones, Deputy Operations Officer, (671) 339-2353 Richard Raines, Envr Business Line Coordinator, (671) 339-8420 Tafedeo Sana, Utilities Manager, (671) 339-2397 Michael Teruel, General Engineer Intern, (671) 333-3192 Danny Dungca, Utilities Superintendent, (671) 333-1321 Peter Perez, Transportaion Motor Pool, (671) 339-2098 Mandy Mandapat, (671) 339-5605 Brian Ebel, Facilities Engr, (671) 333-2978

US EPA ARCHIVE DOCUMENT

USN Naval Base Guam: (Other Commands)	Robin Hirano, NAVFAC Pacific, Envr Engr, (808) 472-1493 Julie Shane, Joint Region Marianas, Envr Coord, (671) 339-3198 Troy Imamura, Naval Base Guam, Public Works, (671) 349-3116 Franklin Cruz, FISC Fuel Div, Asst Superintendent, (671) 339-2234 Omar Domian, Naval Base Guam, Public Works, (671) 339-3712 Blaise Koki, Naval Base Guam, Public Works, (671) 339-5314 Rafael Mesa, DZSP21, Annex Mgr, W & WW Div, (671) 488-9024 Arnold Acojido, DZSP21, Facilities Supervisor, (671) 339-6198 Alex Soto, DZSP21, Envr Mgr, (671) 339-6136 Domingo Cabusao, DZSP21, Envr Engr, (671) 333-2121 Romeo Asuncion, DZSP21, Envr Engr, (671) 333-2133 Norbert Quichacho, DZSP21, WWTP Supervisor, (671) 687-3050 Ben Meno, DZSP21, Operations Supervisor, (671) 339-2422 Nadia Wood, DZSP21, Envr Protection Specialist, (671) 339-2034 Jean Jano, DZSP21, Facility Mgr, Haz Waste/ER, (671) 339-4022 Tom Nartin, DZSP21, Orote Plant Supervisor, (671) 339-5102 Van Chlarson, DZSP21, BOTWS Operator, (671) 678-2342 CM1 Cotterell, Bldg 2113 EOD Floor Supervisor CMC Daryl Hauk, Bldgs 557, A4 Seabees LT Chris Norton, Coast Guard, Chief of Inspections Ed Baubauta, DZSP21, Heavy Equipment Mechanic Eloy Pocaigue, DZSP21, Demineralizer Plant Ken Laguana, DZSP21, Crew Leader Clarie Baradi, DZSP21, Water Treatment Plant Dale Owens, DZSP21, Port Ops, Maintenance Supervisor
Guam Shipyard:	Mathews Pothen, President and CEO, (671) 339-5700 Bruce Spencer, Chief Operating Officer, (671) 333-2300 Keith Carter, Shipyard Manager, (671) 339-3222 Sonne Alston, Environmental Mgr, (671) 888-2190 Greg Calvo, Production Mgr, (671) 888-6063 Jess Lujan, Shop 51 Foreman Leonard Salas, Shop 31 Foreman Carmelito Rivera, Shop 38 Leader Lito Tontiangro, Shop 17 Foreman Abe Tiongi, Shop 56 Foreman Leonard Rellera, Shop 17 Foreman Dan San Agustin, Bldg 2078 Shop Foreman Anthony Samiliano, Bldg 22 Shop Foreman
Report Prepared By:	Greg V. Arthur, Environmental Engineer, USEPA Region 9 Spetember 7, 2010

US EPA ARCHIVE DOCUMENT

Table of Contents

1.0 Scope and Purpose . . . . . page 5
1.1 Background 5
1.2 Description of the Facilities and Commands 6
1.3 Facility SIC Codes 7
1.4 Executive Summary 8

2.0 NPDES Permit Requirements . . . . . page 9
2.1 Permit Applicability 9
2.2 Federal BAT/NSPS Categorical Standards 10
2.3 NPDES Permit Conditions 10
2.4 Source Control Instructions 11

3.0 Wastewater Treatment Facilities . . . . . page 12
3.1 Apra Harbor Wastewater Treatment Facility 12
3.2 Ship-to-Shore Collection of CHT Ships Sanitary 14
3.3 Wastewater Collection System 15
3.4 Photo Documentation 16

4.0 Naval Base Guam Wastewater Sources . . . . . page 18
4.1 Victor Wharf Bilge Oily Wastewater Treatment 19
4.2 Polaris Point Bilge Oily Wastewater Treatment 20
4.3 FISC Fuel Reclamation System 21
4.4 Pierside Ships Services Sources 22
4.5 Fena Water Treatment Plant 23
4.6 Hazardous Waste Conforming Storage Facility 24
4.7 Transportation Motor Pool Facilities 24
4.8 Physical Plant Utilities 25
4.9 Other Non-Domestic Wastewater Sources 25
4.10 Photo Documentation 27

5.0 Guam Shipyard Wastewater Sources . . . . . page 33
5.1 Machining and Structural Shops 33
5.2 Oily Wastewater Treatment Unit 34
5.3 Pierside Ships Services Sources 34
5.4 Floating Dry Docks 35
5.5 Other Non-Domestic Wastewater Sources 35
5.6 Photo Documentation 36

6.0 Compliance with NPDES Permit Limits . . . . . page 37
6.1 NPDES Permit Effluent Limits 38
6.2 Receiving Water Standards for Copper, Nickel, and Aluminum 40
6.3 Spill Reduction Through Sewer Rehabilitation 41

US EPA ARCHIVE DOCUMENT

US EPA ARCHIVE DOCUMENT

1.0 Scope and Purpose

On April 26-30, 2010 and May 6-7, 2010, EPA conducted an NPDES compliance evaluation inspection of the military and industrial installations in the service area of the Apra Harbor Wastewater Treatment Plant (Apra Harbor WWTP). The purpose of this inspection was to ensure compliance with the NPDES permits and the Federal regulations covering the waste-water discharges from the Naval Base Guam and the Guam Shipyard into waters of the United States. These regulated discharges include (1) treated sewage from the Apra Harbor WWTP, (2) industrial wastewaters from the Guam Shipyard floating drydock, (3) industrial storm waters from the Naval Base Guam and the Guam Shipyard sources, (4) service area sources contributing non-domestic wastewaters into the Apra Harbor WWTP sewers, and (5) sludge disposal from the Apra Harbor WWTP.

This is the first of four reports. This report covers the findings pertaining to the Apra Harbor WWTP, the contributing sewer system, and the service area sources within the Naval Base Guam and the Guam Shipyard. The second and third reports will cover the findings pertaining to the industrial storm water discharges from the Naval Base Guam and the Guam Shipyard. The fourth report will cover the findings pertaining to the direct discharge of wastewaters from the Guam Shipyard floating dry dock to the ocean.

This NPDES compliance evaluation inspection of the Apra Harbor military and industrial installations consisted of the following:

- The on-site inspection of the Apra Harbor wastewater treatment plant;
- On-site inspections of the Guam Shipyard floating dry dock;
- On-site inspections of the 18 Naval Base Guam industrial activities and 5 Guam Shipyard industrial activities contributing to the Apra Harbor sewers;
- On-site inspections of the Guam Shipyard industrial and wharf activities for storm water;
- On-site inspections of the Naval Base Guam wharf activities for storm water;
- Close-out briefings with staff from NAVFAC, Guam EPA, and the Guam Shipyard;
- Review of Navy Region Marianas instruction 5090.3A for the wastewater pollutant minimization and pretreatment program;
- Review of 2008-2010 influent, effluent and sludge data for the Apra Harbor WWTP;
- Review of 2008-2010 effluent data for the Guam Shipyard floating dry dock;
- Review of scattered effluent data for the internal non-domestic sources;
- Review of the 2010 NAVFAC Compliance Strategy Report (SSR-3450-ENV).

The inspection participants are listed on the title page. Arthur conducted the inspections on April 26-30 and May 6-7.

1.1 Background

On November 24, 2008, EPA issued a Finding of Violation (CWA 309(a)-09-002) covering the discharge from the Apra Harbor wastewater treatment plant and the storm water management at the Naval Base Guam. The findings were based on a July 16-17, 2008 EPA multi-media inspection of the Naval Base Guam and the Guam Shipyard, as well as on

subsequent submittals by the Navy. For the Apra Harbor WWTP, the 2008 EPA Finding of Violation cited on-going permit violations for copper, nickel, aluminum, BOD percent removal, and TSS percent removal, as well as occasional violations for enterococci, zinc, and residual chlorine. The facility continues to qualify for listing in significant non-compliance in particular for copper, nickel, aluminum, and BOD and TSS percent removal rate.

This inspection report covers only the activities regulated by NPDES permit No.GU0110091 for the Apra Harbor WWTP including the condition of the sewer collection system and non-domestic wastewater sources into the sewer system. EPA and the Navy are drafting a comprehensive Federal Facilities Compliance Agreement to formalize the remaining work necessary to comply with the NPDES permit for the Apra Harbor WWTP, both now and in the future upon the military expansion on Guam. This inspection report does not cover the activities regulated under the storm water permits issued to the Navy or the Guam Shipyard, or the floating drydock discharges regulated under a separate NPDES permit.

1.2 Description of the Facilities and Commands

The installations within the sewer service area of the Apra Harbor WWTP consist of the Naval Base Guam and the Guam Shipyard. The Naval Base Guam includes the Orote Point/Apra Harbor Main Base, the Polaris Point Submarine Operations, the Sasa Valley Fuel Farm and Fueling Depot Piers, the Naval Port Operations, and the Fena Water Treatment Plant. The Guam Shipyard consists of the former Naval Ship Repair Facility, and two floating drydocks. The Naval Base Guam and the Guam Shipyard both generate domestic wastewaters, non-domestic wastewaters, and CHT ships sanitary for collection into the Apra Harbor domestic sewer system and discharge from the Apra Harbor WWTP to the Pacific Ocean. See Figure 1.2 on the next page for the locations of the principal wastewater sources and treatment units.

The pertinent activities at the Naval Base Guam fall under four commands. Joint Region Marianas provides consolidated support management functions for Naval Base Guam and Anderson Air Force Base, including the port operations, environmental services, and the administration of the Guam Shipyard lease agreement. A service detachment of the Fleet Industrial Supply Center (FISC) Yokosuka operates the fueling piers, tank farms, and fuel reclamation system within the Naval Base Guam. The Naval Facilities Engineering Center (NAVFAC) Marianas under NAVFAC Pacific and Joint Region Marianas provides public works, asset management, operations, construction management, and facilities management. DRMO Guam under the Defense Logistics Agency collects and handles hazardous wastes.

The Guam Shipyard is a private leasee of the former Naval Ship Repair Facility. In 1997 the Guam Economic Development Agency leased the former NSRF from the Navy after it was decommissioned from service. The Guam Shipyard subleased the former NSRF from the Guam Government.

https://www.cnic.navy.mil/marianas/index.htm
https://portal.navfac.navy.mil/portal/page/portal/navfac/NAVFAC_ABOUT_PP
http://www.guamshipyard.net

US EPA ARCHIVE DOCUMENT

Figure 1.2
Apra Harbor Wastewater Treatment Plant – Sewer Service Area

1.3 Facility SIC Codes

The Naval Base Guam is assigned the SIC code for national security (SIC 9711). The Guam Shipyard is assigned the SIC code for ship building and repairing (SIC 3731). The Apra Harbor Wastewater Treatment Plant is assigned the SIC code for sewage treatment plants (SIC 4952).

US EPA ARCHIVE DOCUMENT

US EPA ARCHIVE DOCUMENT

1.4 Executive Summary

The Navy appropriately responded to the November 24, 2008 EPA Finding of Violation which cited numerous NPDES permit violations for the Apra Harbor WWTP. Apra Harbor qualified and continues to qualify for listing in significant non-compliance. In response, the Navy obtained funding and began upgrading and rehabilitating the wastewater treatment plant, the water treatment plant, and critical portions of the collection system. Consistent compliance will be achieved upon resolution of two conditions.

First, the deterioration of the collection system, and to some degree the treatment plant, compromises secondary treatment, with infiltration/inflow detrimentally effecting removal rates, sewer system failures causing sewage spills, and equipment failures impairing treatment plant operations. The Navy has identified and scoped the corrective actions needed for infrastructure rehabilitation, and has obtained funding for Phase I but not for Phases II and III.

- All collection system and treatment plant upgrades identified for Phase I and Phases II and III must be completed to resolve infiltration, inflow, spills, and operational issues.
- Repair of the pump station serving the floating dry dock at the Guam Shipyard must be completed before the restart of dry dock operations.
- The Phase I upgrades should cover rehabilitation of all CHT risers.
- Uncovered drainages that add to the inflow should be covered or blocked during storms.

Second, the NPDES permit limits for metals are unattainable by secondary treatment and BAT-equivalent source controls. The water quality standards for aluminum, copper, and nickel were applied without a zone-of-initial-dilution adjustment. As a result, the permit limits are more stringent than those established for any other ocean discharging military installation or municipality in EPA Region 9. Resolution would involve the demonstration of (1) the effectiveness of source controls, and (2) no impacts on receiving water quality.

- The installation of a corrosion inhibitor chemical injection facility at the water treatment plant should be completed in order to reduce the domestic leaching of metals.
- Monitoring of the receiving waters, treatment plant influent, CHT ships sanitary, and the 22+ Naval Base Guam and 5+ Guam Shipyard industrial sources should be expanded.
- A sewer discharge certification program should be implemented that sets internal discharge limits, determines BAT treatment or equivalence for each industrial wastewater source, updates the industrial wastewater inventory, issues certificates to all non-domestic discharges, inspects each certified source at least annually, and submits an annual report.
- It should be determined whether solids removal efficiencies could be improved at the Victor Wharf BOWTS and the FISC Fuel Reclamation System, and if in-line caustic preconditioning of CHT ships sanitary wastewaters would increase metals removals.

2.0 NPDES Permit Requirements

- *The NPDES permit must apply Federal BAT/NSPS standards to all regulated sources and the Guam water quality standards to the discharge to the ocean.*

The NPDES permit for the Apra Harbor wastewater treatment plant applies Guam water quality standards without adjustment, Federal best-available-technology (BAT) standards, and best-professional-judgment (BPJ) based effluent limits to the treatment plant effluent into the joint ocean outfall discharge from the Apra Harbor and Agat wastewater treatment plants. No Federal categorical standards apply to any internal sources discharging to the Apra Harbor sewers. However, numerous non-domestic internal sources discharge into the Apra Harbor sewers include three bilge oily wastewater treatment units, a fuel reclamation unit, a water treatment plant, and CHT ships sanitary. The NPDES permit does not require implementation by Joint Region Marianas of a sewer discharge certification program throughout the Apra Harbor sewer service area as the BPJ expression of BAT/NSPS to the non-domestic sources. The application of Federal BAT/NSPS standards and Guam water quality standards was determined through visual inspection.

Requirements

- None.

Recommendations

- Joint Region Marianas should revise the COMNAVREG Marianas Instructions to set internal wastewater discharge limits, and to implement a sewer discharge certification program that applies to all sources into the Apra Harbor WWTP.

- The NPDES permit should list the Guam Shipyard as a co-permittee, if the Guam Shipyard sources are not covered by the COMNAVREG Marianas Instructions.

2.1 Permit Applicability

NPDES Permit GU0110091 was reissued on April 8, 2010 to become effective on June 1, 2010, and to expire on May 30, 2015. The previous version of the permit became effective on April 16, 2001 and expired on April 15, 2006. The previous version remained in effect until reissuance by administrative extension since the Navy submitted an application for permit renewal more than 180 days before the expiration date. The 2010 and 2001 versions advanced nearly identical effluent limits for conventional pollutants, pathogens, residual chlorine, copper, nickel, aluminum, oil and grease, and pH applied to the wastewater treatment plant effluent (NPDES Compliance Sample Point 001).

The 2010 permit no longer covers emergency overflow discharges from the Fena water treatment plant (NPDES Compliance Sample Point 002). The 2010 permit also no longer advances effluent limits for zinc.

US EPA ARCHIVE DOCUMENT

US EPA ARCHIVE DOCUMENT

2.2 Federal BAT/NSPS Categorical Standards

There were no identified wastewater sources into the Apra Harbor sewers that qualify for regulation under any Federal categorical standards. In particular, the Federal standards in 40 CFR 419 apply to petroleum refineries and not to fuel tank farms and fueling stations. Also the Federal standards in 40 CFR 442 apply to internal cleaning of transportation equipment for chemical, petroleum, or food grade cargos, and not the cleaning of drums, intermediate bulk containers, or closed-top hoppers.

2.3 NPDES Permit Conditions

Effluent Discharge - The NPDES permit sets effluent limits that apply to the treatment plant effluent discharge into the ocean outfall for conventional pollutants, pathogens, total residual chlorine, copper, aluminum, nickel, oil and grease, and pH.

NPDES Permit Limits	Concentrations				Loadings (lbs/d)		
Part I(A) @ NPDES-001	mo-avg	wk-avg	d-max	instant	mo-avg	wk-avg	d-max
BOD (mg/l)	30	45	-	-	1076	1614	-
TSS (mg/l)	30	45	-	-	1076	1614	-
oil & grease (mg/l)	10	-	15	-	360	-	540
BOD removal rate (%)	85%	-	-	-	-	-	-
TSS removal rate (%)	85%	-	-	-	-	-	-
residual-Cl (mg/l)	7.5	-	12.3	-	0.269	-	0.442
enterococci (#/100ml)	35	-	-	104(57)	-	-	-
fecal coliform (#/100ml)	200	400	-	-	-	-	-
copper (µg/l)	2.9	-	4.8	-	0.105	-	0.17
nickel (µg/l)	8.2	-	13.0	-	0.29	-	0.48
aluminum (µg/l)	120	-	200	-	4.30	-	7.17
pH (s.u.)	-	-	-	6.5-8.5	-	-	-
monitoring only	flow rate, priority pollutants, total ammonia, chronic toxicity						

The NPDES permit effluent limits for conventional pollutants are the Federal best-available-technology (BAT) standards for secondary treatment in 40 CFR 133. The effluent limits for oil and grease are based on a best-professional-judgment (BPJ) application of technology-based effluent limits. The effluent limits for fecal coliform, enterococci, and residual chlorine are based on the Guam water quality standards. The effluent limits for copper, aluminum, and nickel are also based on the application of Guam water quality standards to the treatment plant effluent and not with adjustment for a zone-of-initial-dilution or a zone-of-mixing. Only the instantaneous limit for enterococci was changed in the new permit.

Receiving Water Limits – Part I(B) of the NPDES permit also applies receiving water limits for the discharge into the Tipalao Bay. Among the provisions are narrative prohibitions against visible floating materials, visible oily sheen, oily deposits, biota damage, objection-able odors or taste in the bay or biota, radioactive materials, and toxicity. The permit also sets numerical prohibitions against ambient pH change over 0.2 s.u., orthophosphates over

0.05 mg/l, nitrate-nitrogen over 0.2 mg/l, ammonia over 0.02 mg/l, dissolved oxygen content below 75% saturation, ambient salinity increases of more than 10%, ambient TSS increases of more than 10% or over 20 mg/l, turbidity increases of 1.0 NTU over ambient, and ambient temperature change of more than 1.0°C.

The NPDES permit also sets receiving water monitoring at three open water locations, monthly for visual sheen, and quarterly for turbidity, suspended solids, temperature, salinity, pH, dissolved oxygen, copper, nickel, aluminum, total ammonia, and total residual chlorine.

Sludge - The NPDES permit refers to Federal sludge regulations in 40 CFR 503 and 40 CFR 258 that apply to the disposal of sewage treatment plant sludges through land application and composting, landfill disposal, or surface monofill disposal.

Sludge Disposal Limits mg/kg – dry weight	Landfill Disposal 503.13 Table 1	Land Application 503.13 Table 3	Monofill Disposal 503.23 Table 1
arsenic	75	41	73
cadmium	85	39	-
copper	4300	1500	-
chromium	-	-	600
lead	840	300	-
mercury	57	17	-
molybdenum	75	-	-
nickel	420	420	420
selenium	100	100	-
zinc	7500	2800	-

2.4 Source Control Instructions

The NPDES permit requires the development of two source control plans. The Part V(1) pollution prevention plan is meant to control contaminated run-off and spills from the collection system and treatment units through BMPs developed by the Navy. The Part V(2) toxic pollutant minimization program is meant to identify pollutant sources and develop a program to minimize entry into the sewers. The NPDES permit does not require the Navy to develop and implement a sewer discharge certification program.

COMNAVREG MARIANAS Instruction 5090.3A provides the Navy the authority for a sewer discharge certification program. This program is not implemented and does not appear to apply to all sources. The instruction also does not include the source control measures that would qualify as a BPJ expression of BAT/NSPS for the industrial wastewaters sources into the Apra Harbor sewer system -- such as (1) discharge limits, (2) procedures for sewer discharge certification, (3) procedures to update the source inventory, (4) procedures for source inspections, or (5) the submittal of an annual report. An example of this sort of source control can be found in Part F of the NPDES permit for the Fort Kam wastewater treatment plant which required the Navy to implement COMNAVREG HAWAII Instructions 11345.5A and 11345.2D to apply to all Pearl Harbor and Hickam Air Force Base sources.

US EPA ARCHIVE DOCUMENT

US EPA ARCHIVE DOCUMENT

3.0 Wastewater Treatment Facilities

The Navy owns the Apra Harbor Wastewater Treatment Plant and the domestic and ships sanitary sewage collection systems on the Federal installations near and around Apra Harbor. The Navy also (1) operates and maintains the treatment plant, (2) has assumed responsibility for service area asset management and capitalization, (3) operates and maintains the sewer system serving the Naval Base Guam, and (4) has conferred by lease to the Guam Shipyard via sublease from Guam, the responsibility to operate the sewer system serving the shipyard. The Apra Harbor Wastewater Treatment Plant discharges treated wastewaters through a Navy-owned outfall, shared with non-Federal Agat Wastewater Treatment Plant.

Requirements

- None.

Recommendations

- The Phase I upgrades to the wastewater treatment plant and the main sewer pump station authorized under MILCON P-262 are funded and should be completed by October 2010.
- The Phase I upgrades to construct, replace or rehabilitate sewer lines, relief sewers, pump stations, manholes, and force mains authorized under MILCON P-534 are funded and should be completed by December 2011.
- The Phase I upgrades should cover rehabilitation of all CHT risers.
- The Phase II and Phase III additional upgrades to the sewer collection system to be authorized under MILCON P-535 should be funded and scheduled.

3.1 Apra Harbor Wastewater Treatment Plant

The Apra Harbor Wastewater Treatment Plant is a secondary sewage treatment plant with a design capacity of 4.3 mgd, and a peak design capacity of 6.0 mgd. NAVFAC administers military contract MILCON P-262 for a series of wastewater treatment plant upgrades to be completed by October 2010. See Figure 3.1 on the next page for a schematic of the facility configuration.

Headworks - Three sewer mains terminate at the Apra Harbor Wastewater Treatment Plant. The headworks consist of manually cleaned bar screens, an influent metering flume, and the lower level of a joint influent/effluent pump station. Septage from Navy sources is accepted into the headworks. Influent is pumped for delivery through two identical treatment trains. Dry-weather influent averages 2.0 to 2.5 mgd and is weak in strength <80 mg/l BOD.

Dual Liquid Treatment Trains - Both treatment trains involve pre-aeration, covered rolling grit removal, and primary settling, with the primary sludge pumped to DAF thickening, and fume draw off through odor control. An expansion to secondary in 1996 added trickling

filtering, activated sludge solids contact, and secondary clarification. Each treatment train has a 4.3 mgd design capacity, equivalent to the rated capacity of the full treatment plant.

Figure 3.1
Apra Harbor Wastewater Treatment Plant – Configuration

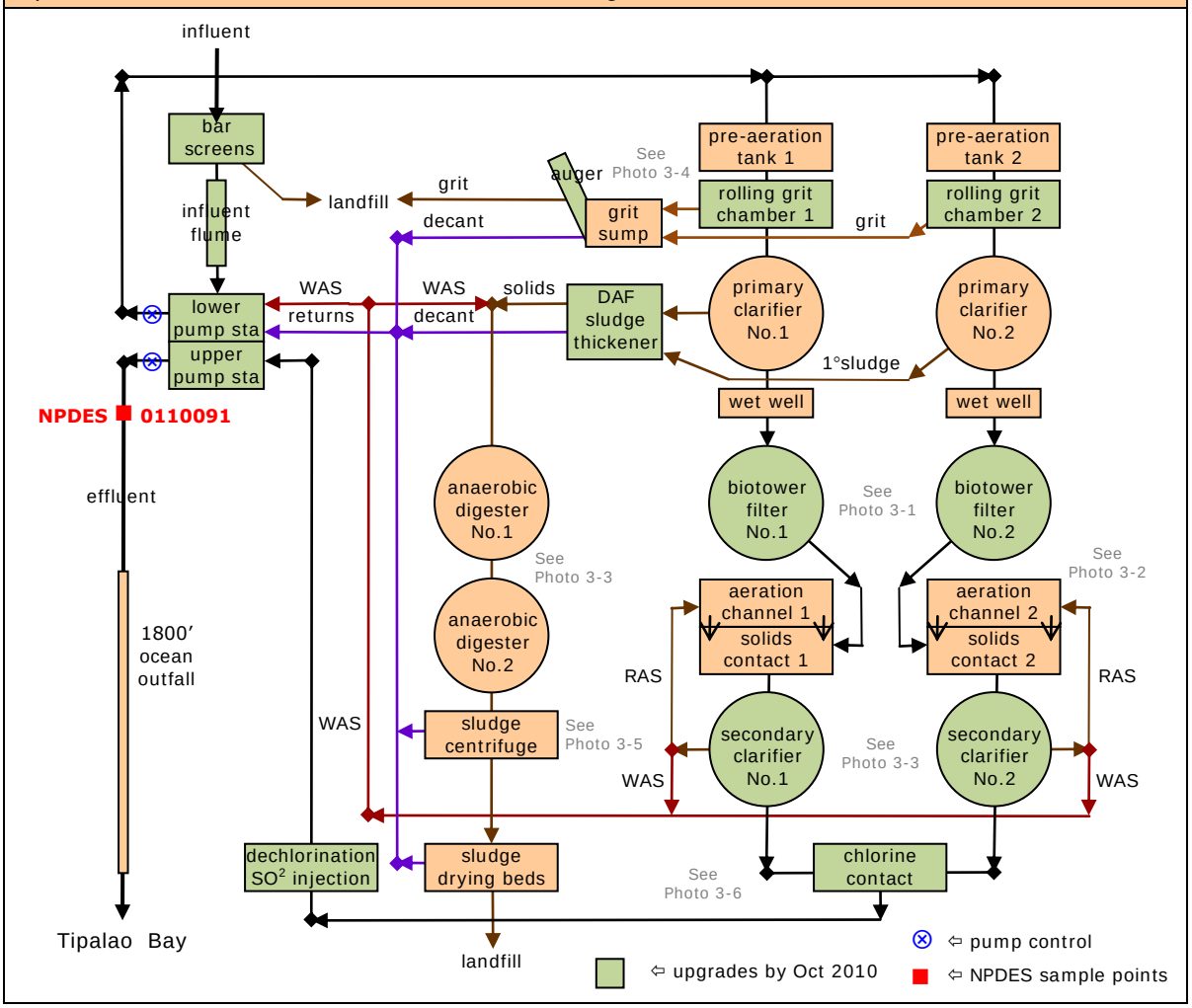

MILCON	Wastewater Treatment Plant Upgrades
P-262	Replacement of the drive mechanism in secondary clarifier No.1
P-262	Replacement of the skimmer rake in secondary clarifier No.2
P-262	Leveling of the weirs in both secondary clarifiers
P-262	Rehabilitation of the DAF sludge thickener
P-262	Replacement of the headworks with travelling bar screens
P-262	Installation of separate influent and effluent pump stations
P-262	Replacement of the grit augers and grit chamber diffusors
P-262	Replacement of the trickling filter recirculation pumps
P-262	Replacement of the disinfection with Miox on-site bleach generation disinfection
P-262	Replacement of the dechlorination with sodium metabisulfite dechlorination
P-262	Installation of SCADA systems for the wastewater treatment plant

MILCON P-262 completion by Oct 2010

US EPA ARCHIVE DOCUMENT

There is no recirculation through the trickling filters even during low flow periods at night. There is also no unit process integration between the treatment trains. Secondary activated sludge returns to activated sludge aeration prior to solids contact. Return and wasting rates result in ~2000 mg/l MLSS. Excess activated sludge wastes to either the digesters or back to the influent. Secondary clarified effluent averages <5 mg/l TSS. See Photos #3-1, #3-2, #3-3, #3-4 and #3-5 in Section 3.4 of this report on pages 16 and 17.

Final Discharge - Secondary clarified effluent is disinfected and dechlorinated for discharge through the joint influent/effluent pump station to the Tipalao ocean outfall. The final steps involve chlorine gas injection, chlorine contact, and sulfur dioxide dechlorination. The outfall is 1,800 feet long and 120 feet deep at its two-port diffuser outlet. A sample port on the effluent pump station line is the final NPDES permit compliance sampling point, designated in this inspection report by permit number as NPDES-0110091.

Solids Handling - A single DAF sludge thickener concentrates primary sludge prior to feeding two anaerobic digesters plumbed in series. Secondary waste activated sludge can also feed directly into the digesters. The digesters are unheated with floating covers. Grit removed by auger is trucked off-site for landfill disposal. Digested sludge can be centrifuged or dried in sludge drying beds with decants returned to the headworks. Dried sludge is trucked off-site for landfill disposal. See Photo #3-6 in Section 3.4 of this report on page 17.

3.2 Ship-to-Shore Collection of CHT Ships Sanitary

CHT Riser Inventory - The Apra Harbor sewer system includes CHT risers sited on the piers and wharfs around Inner Apra Harbor to collect ships sanitary. The 2015 ilitary expansion on Guam is expected to result in an increase in ships using shoreside services more frequently and in higher numbers. It is not expected to result in more home porting. The CHT risers each have one or more 4" hose coupling connections. The CHT risers drain by gravity sewers to specified lift stations for force main delivery to the wastewater treatment plant.

Operational Control	Shoreside Wharves and Piers	Wharf Lift Stations
Naval Base Guam	Romeo, Sierra, Tango, Uniform, Victor, Whiskey, Xray	SPS 10,14,21,22,23
Polaris Point	Alpha, Bravo	SPS 7
FISC Fueling Depot	Delta, Echo	SPS 6
Naval Magazine	Kilo	SPS 32
Guam Shipyard	Lima, Mike, November, Oscar, Papa, Quebec, Finger Piers	SPS 19,20,27
Coast Guard	Victor	SPS 14
Merchant Marine	Victor	SPS 14

CHT Riser Operations - Navy Port Operations connects and disconnects the CHT hoses on and off the Naval Base Guam sewer system risers. Ships personnel connect and salt water flush and disconnect the hoses on and off the ship's risers. The salt water flush just before disconnection lasts for around 10 minutes at full pressure according to the NAVFAC MO-340 Ship-to-Shore Hose Handling Operations Manual. Guam Shipyard's Pier Services Department connects and disconnects the CHT hoses on and off the shipyard sewer system

US EPA ARCHIVE DOCUMENT

risers under the lease contract with the Navy. Guam Shipyard does not have written operating procedures covering the CHT systems.

CHT Riser Condition - Numerous CHT risers were observed during this inspection. The CHT risers operated by the Guam Shipyard included those found to be disabled (Lima), functioning in near disrepair (Oscar), and functioning in good condition (November). The CHT risers operated by the Naval Base Guam included those found to be disabled (Uniform), and functioning in good condition (Alpha, Bravo, Delta, Echo, Victor, Sierra, Tango). See Photos #3-7, #3-8, #3-9, and #3-10 in Section 3.4 of this report on page 17.

3.3 Wastewater Collection System

The Apra Harbor wastewater treatment plant collection system involves gravity sewer lines, force mains, and lift stations located on the Naval Base Guam and the Guam Shipyard. The Navy operates the collection system on the Naval Base Guam and has conferred by lease to the Guam Shipyard via sublease from the Guam Economic Development Administration, the responsibility to operate the sewer system serving the shipyard. However, the Navy maintains ownership of the entire collection system and through military contracting assumes responsibility for service area asset management and re-capitalization.

In 2009, the Navy completed a condition and capacity assessment of the sewer lines, mains, and lift stations for the entire sewer system. The survey verified the deteriorated condition of much of the collection system. The survey ranked the rehabilitation work into three tiers funded into Phase I under MILCON P-534 and Phases II and III under MILCON P-535.

MILCON	Collection System Upgrade
P-262	Replacement of main collection system pump station SPS-16
P-262	Installation of SCADA system for SPS-16
P-534	Installation of a parallel relief sewers for Gravity Lines A-1, A-2, B-1, B-2
P-534	Replacement of pump stations SPS-10, 14, 15, 18, 22
P-534	Rehabilitation of pump station SPS-7
P-534	Replacement of CHT risers at Victor Wharf and connection to SPS-22
P-534 *	Replacement of the gravity sewer system at the Guam Shipyard
P-534	Replacement of the SPS-18 force main and Gravity Line D from SPS-18 to SPS-16
P-534	Installation of SCADA systems for SPS-10, 18, 22
P-534	Replacement of the Delta Echo force main from FISC Fuel Tank Farm to Polaris Point
P-534	Installation of in-line comminutor at SPS-18
P-535 *	Replacement of other gravity lines, force mains, pump stations, CHT risers

* Detailed Scope		MILCON P-534	MILCON P-535	MILCON P-535	No Action
Pipe	Replace or Rehab	13761 feet	18,660 feet	5,053 feet	5,218 feet
	Heavy Cleaning	8,558 feet	926 feet	1,578 feet	
Manhole	Replace or Rehab	213 manholes	86 manholes	198 manholes	116 manholes
	Minor Rehab	23 manholes	17 manholes	92 manholes	

P-262 completion by Oct 2010	P-534 completion by Dec 2011	P-535 not yet funded

US EPA ARCHIVE DOCUMENT

Mobilization started August 16, 2010 under MILCON P-534 for the Phase I recapitalization of portions of the sewer system in part to increase capacity where needed but also to reduce infiltration and inflow, not just within the Naval Base Guam but also on Guam Shipyard. Phase II and Phase III under MILCON P-535 also has been scoped out to cover additional lift station replacements and other projects. The replacement of one lift station SPS-16 will be completed under earlier MILCON P-262 for treatment plant upgrades.

3.4 Photo Documentation

The 123 digital photographs taken during this inspection are saved to digital file as *guam-001-*date*.jpg* to *guam-123-*date*.jpg*. The photos on this page are of the Apra Harbor WWTP.

Photo #3-1: Top View - Biotower Trickling Filter
Taken By: Greg V. Arthur
Date: 04/26/10

Photo #3-2: Activated Sludge – Solids Contact
Taken By: Greg V. Arthur
Date: 04/26/10

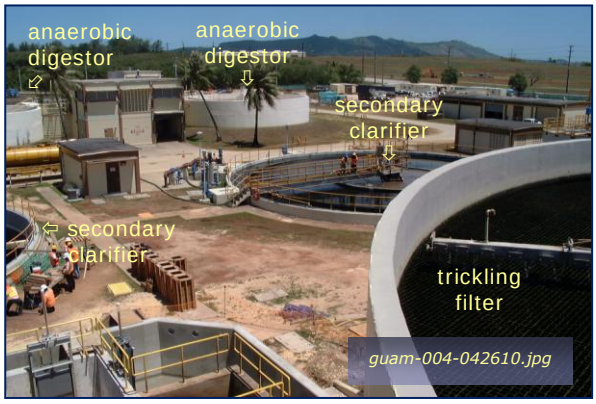

Photo #3-3: Secondary Clarifiers and Digestors
Taken By: Greg V. Arthur
Date: 04/26/10

Photo #3-4: Odor Control Duct Lines
Taken By: Greg V. Arthur
Date: 04/26/10

US EPA ARCHIVE DOCUMENT

The photos on this page are of the Apra Harbor Wastewater Treatment Plant, and the CHT risers on both the Naval Base Guam and the Guam Shipyard.

Photo #3-5: Apra Harbor WWTP - Sludge Drying
Taken By: Greg V. Arthur
Date: 04/26/10

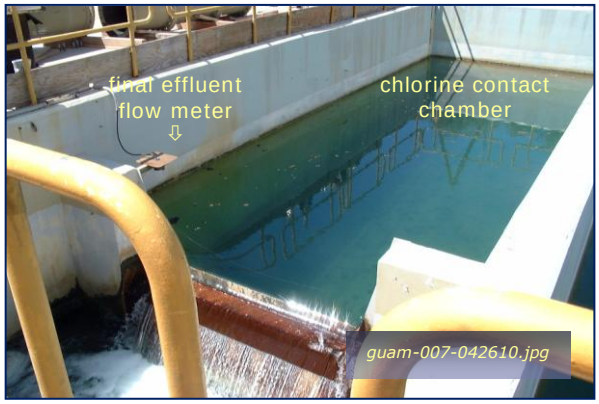

Photo #3-6: Apra Harbor WWTP - NPDES-001
Taken By: Greg V. Arthur
Date: 04/26/10

Photo #3-7: Oscar Wharf CHT Sewer Riser
Taken By: Greg V. Arthur
Date: 04/26/10

Photo #3-8: November Wharf CHT Sewer Riser
Taken By: Greg V. Arthur
Date: 04/26/10

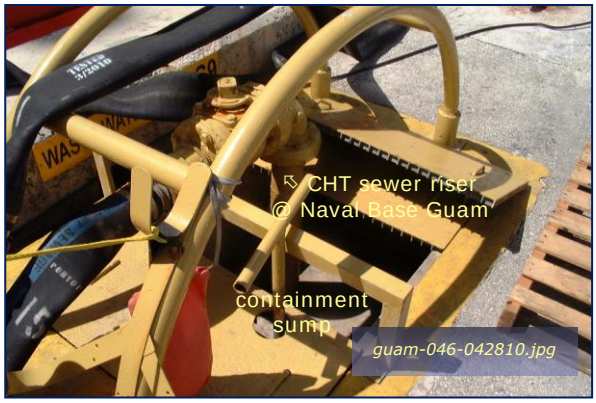

Photo #3-9: Sierra Wharf CHT Sewer Riser
Taken By: Greg V. Arthur
Date: 04/28/10

Photo #3-10: Echo Fueling Pier CHT Sewer Riser
Taken By: Greg V. Arthur
Date: 04/28/10

US EPA ARCHIVE DOCUMENT

4.0 Naval Base Guam Wastewater Sources

There are numerous Naval Base Guam sources of non-domestic wastewater into the Apra Harbor Wastewater Treatment Plant. The main non-domestic sources include: (1) CHT ships sanitary from the ships at berth at the wharves, (2) treated ships bilge water from two treatment units, (3) treated oily drainage and tail waters from the FISC Fuel Tank Farm, and (4) treated backwash from the Fena Water Treatment Plant. During this inspection, EPA identified and inspected 18 Naval Base Guam sources of non-domestic wastewaters. Their discharge points are designated in this report as IWD-101 through IWD-116.

IWD	EPA ID'ed Non-Domestic	Sewer Discharges	Pretreatment In-Place	gpd
101	Victor Wharf BOWTS	ships bilge	EQ O/W P/DMUL/COAG IAF	15000
102	Polaris Point BOTWS	ships bilge	O/W EQ P/DMUL/FLOC DAF	5000
103	FISC Fuel Reclaim	drainage,ballast,tank bottoms	O/W EQ	5000
104	Fena Water Treatment	filtrate,cool,condensate,wash	-	7500
105	Bldg 1790 Bioremed Pad	vac truck,pad drainage	O/W	~
106	Bldg 364 Maint Shops	inside floor drainage	O/W	100
107	Bldg 372 Washrack	vehicle wash,drainage	O/W	100
108	Bldg 375 Vehicle Wash	vehicle wash	O/W	100
109	Bldg 4907 Demin Plant	IXregen,drum rinse,brine,drain	EQ TEST	3000
110	Bldg 4907 Demin Plant	product tank overflow	-	~
111	Bldg 4451 Steam Plant 1	blowdown,condensate,drain	-	500
112	Bldg 4451 Steam Plant 2	blowdown,condensate,drain	-	500
113	Bldgs 557/563 Seabees	vehicle wash,drainage	O/W	1165
114	Bldg 4430 Shore Repair	hydrotest,ultrasonic,drainage	-	150
115	Bldg 257 NEX Autoport	drainage,car washdown	O/W	1200
116	Bldgs 2113/2114 EOD	boat wash,floor drainage	-	100
-	CHT Risers @ Wharves	ships sanitary from avg 6 ships	-	250000
-	Naval Magazine Sewers	septage	-	unk

KEY						
	COAG	coagulation	DAF	dissolved air flotation	DMUL	de-emulsification
	EQ	equalization	IAF	induced air flotation	FLOC	Flocculation
	P/	metals precipitation	O/W	oil water separation	TEST	test prior to discharge

Installation flow estimates from the February 2010 NAVFAC ESC report (SSR-3450-ENV)
CHT flow estimates from ~30 gpm average per non-CVN ship (UFC 3-240-02N, 16 Jan 2004)

Requirements

- None.

Recommendations

- Uncovered drainages that add to the inflow should be covered or blocked during storm events at the Bldg 563 washrack, Bldg 1790 bioremediation pad, and Bldg 372 washrack.
- The Bldg 307 drain line from the oil water separator and cooling circuit should be traced.

US EPA ARCHIVE DOCUMENT

- It should be determined whether the use of induced air flotation vessel influent as make-up diminishes the solids removal efficiencies of the Victor Wharf BOWTS.
- It should be determined whether wastewater treatment (precipitation/flotation) to increase removals at the FISC Fuel Reclamation System would reduce overall metals loadings.
- Compliance sampling points accounting for all non-domestic discharges should be identified for the Fena WTP, Bldg 4430 Shore Repair, and Bldg 2113/14 EOD Compound.

4.1 Victor Wharf BOTWS

The Victor Wharf Bilge Oily Wastewater Treatment System is a batch treatment unit that handles the bilge water collected from ships at berth into barges or trucks for delivery.

Figure 4.1
Victor Wharf BOWTS – Configuration

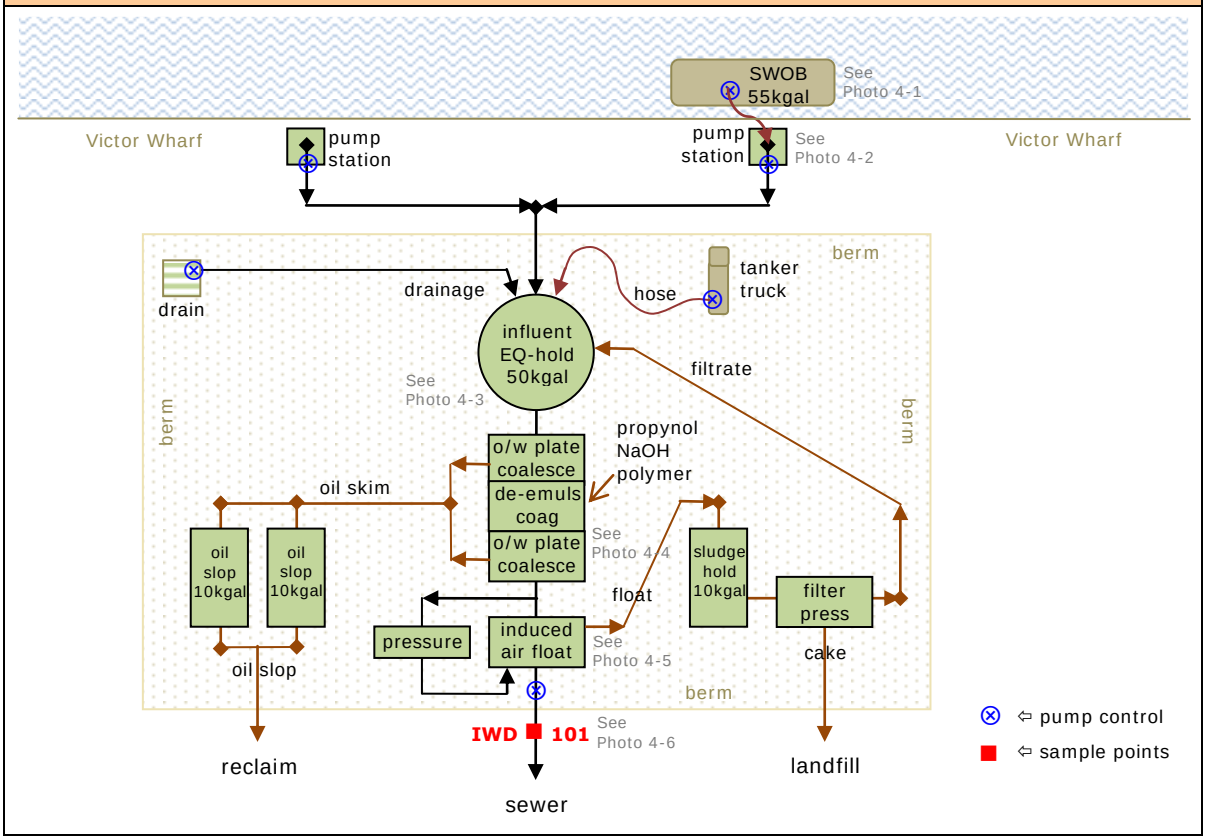

Delivery – Ships at berth at the Point Orote wharves pump bilge to barges or tanker trucks for delivery and treatment through the Victor Wharf BOWTS. The 55,000 gallon capacity SWOB barges are pumped out through pump station risers on the wharf which feed by underground pipe into the BOWTS. Tanker trucks are pumped out by hose directly into the BOWTS. See Photos #4-1 and #4-2 in Section 4.10 of this report on page 27.

US EPA ARCHIVE DOCUMENT

Wastewater Treatment – The Victor Wharf Point BOTWS has a rated design capacity of 150 gpm. Pumped bilge collects in a 50,000 gallon holding tank for metered delivery through chemical-aided oil water separation. The oil water separation steps involve preliminary plate coalescing, de-emulsification, coagulation, secondary plate coalescing, and induced air flotation. The induced air flotation unit draws vessel influent as injection make-up to induce air into the vessel. See Photos #4-3, #4-4 and #4-5 in Section 4.10 of this report on page 27.

Residuals – Skimmed oil from the plate coalescing steps collects into two 10,000 gallon oil holding tanks for delivery and off-site oil reclaim. The induced air flotation float is skimmed to a 10,000 gallon sludge holding tank for metered delivery through a filter press. Filtrate returns to the influent holding tank. Filter cake is disposed off-site in a landfill

Discharge Point - The induced air flotation vessel discharges to the sewers, with the sewer connection designated for the purposes of this inspection report as compliance sampling point, IWD-101. See Photo #4-6 in Section 4.10 of this report on page 27.

4.2 Polaris Point BOWTS

The Polaris Point Bilge Oily Wastewater Treatment System is a batch treatment unit that handles bilge water collected by dedicated sewers from ships berthed at Polaris Point.

Figure 4.2
Polaris Point BOWTS – Configuration

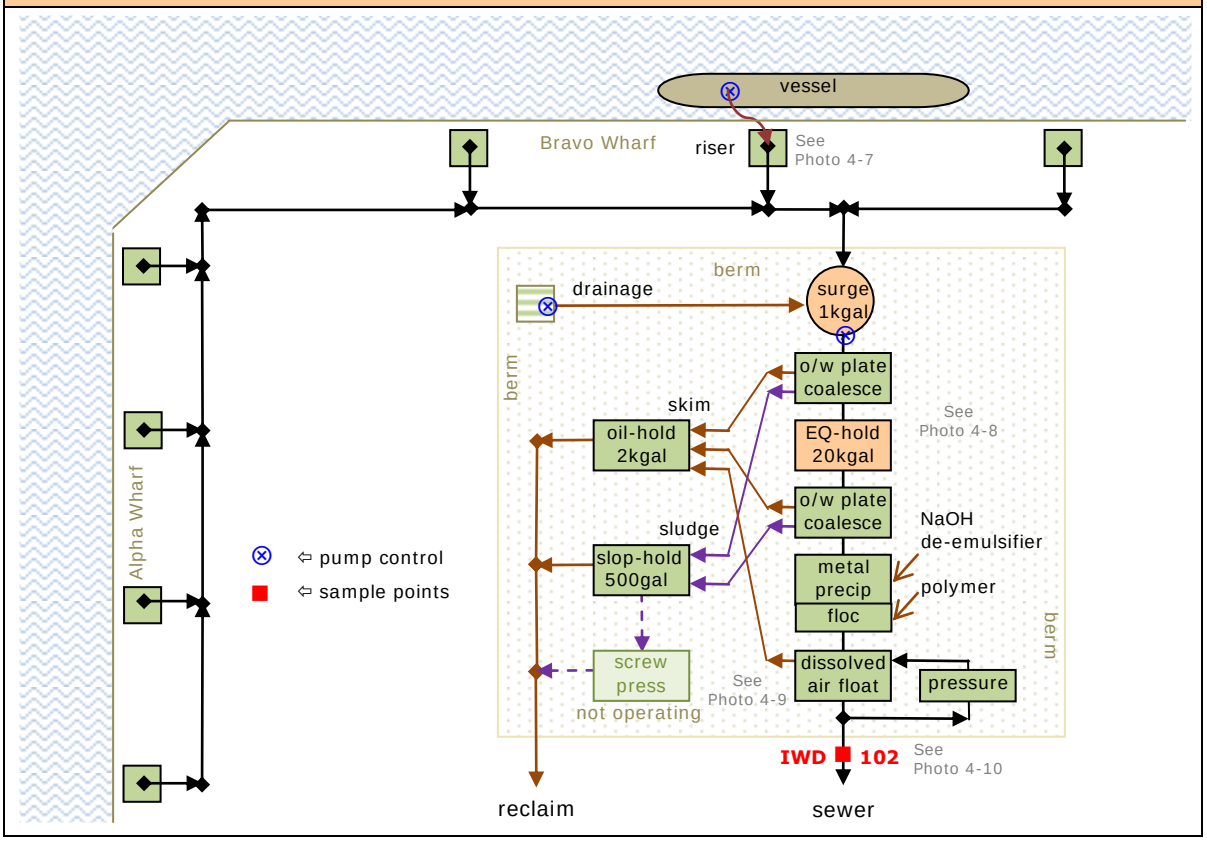

US EPA ARCHIVE DOCUMENT

US EPA ARCHIVE DOCUMENT

Delivery - The Alpha and Bravo Wharves at Polaris Point have parallel bilge and CHT sewers. The bilge sewers include seven riser stations all of which drain by underground line into a small 1,000 gallon surge pump station that feeds to the Polaris Point BOWTS. See Photo #4-7 in Section 4.10 of this report on page 28.

Wastewater Treatment – The Polaris Point BOTWS has a rated design capacity of 40 gpm. Pumped bilge water undergoes preliminary plate coalescing and impoundment. The prelimnary treated bilge is then metered from the 20,000 gallon holding tank through secondary chemical-aided oil water separation that provides plate coalescing, metals precipitation, chemical de-emulsification, chemical-aided flocculation, and final dissolved air flotation. The dissolved air flotation unit draws final effluent as the pressurized make-up for reinjection into the vessel. See Photos #4-8 and #4-9 in Section 4.10 of this report on page 28.

Residuals – The skimmed oil from the plate coalescing steps is delivered to a 2,000 gallon oil holding tank for as-needed delivery and off-site oil reclaim. The dissolved air flotation float and plate coalescing sludges are delivered to a 500 gallon sludge holding tank for metered delivery through a screw filter press. However on the day of this inspection, the filter press was not operating and oily sludges were off-hauled to reclaim.

Discharge Point - The discharge from the dissolved air flotation unit drains to the sewers, with the connection designated in this inspection report as sampling point, IWD-102.

4.3 FISC Fuel Reclamation System

The Bldg 1700 FISC Fuel Reclamation System is a continuous flow-through treatment unit to recover fuel from the oily wastewaters generated by the fuel tank farms, fueling piers, and fuel loading dock at the Naval Base Guam. It has an 80,000 gallon rated design capacity.

Figure 4.3
Bldg 1700 FISC Fuel Reclamation System – Configuration

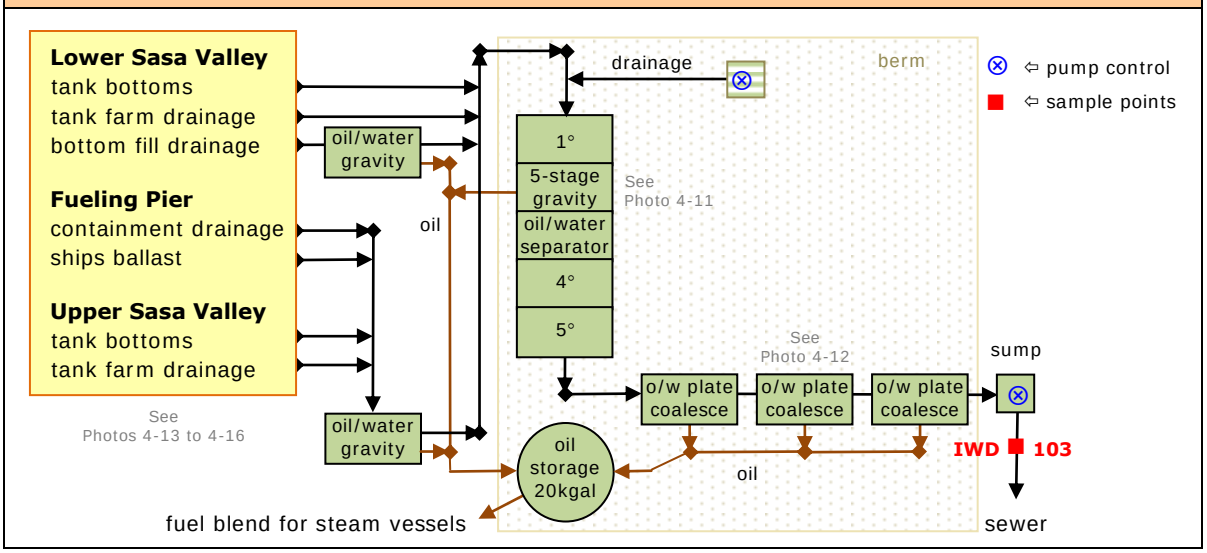

US EPA ARCHIVE DOCUMENT

Sources – FISC operates two tank farms. The Upper and Lower Sasa Valley tank farms together consist of seven above ground fuel tanks with secondary containment berms, and 20 below ground fuel tanks. The Lower Sasa Valley tank farm also includes the fuel reclamation system, and the bottom-fill loading dock. FISC also operates the fueling piers which involve containment pits built into the piers and located beneath the pumps and valving used in the off- and on-loading of fuel to and from ships at berth. The above and below ground fuel tanks generate tank bottoms, which consists of in-tank condensate and entrained brines. The fueling piers, bottom fill loading dock, and above ground fuel tanks also generate drainage contained within secondary containment berms that potentially can be contaminated by fuel spills. See Photos #4-13 to #4-16 in Section 4.10 of this report on page 29.

Delivery – Tank bottoms, drainages, and captured contamination all are conveyed through floor drains by dedicated pipelines to the fuel reclamation system. The fuel tanks have locked and tagged-out valving to allow the periodic draw-off of tank bottoms. See Photo #4-13 in Section 4.10 of this report on page 29.

Fuel Recovery – The Bldg 1700 FISC Fuel Reclamation System consists of a five-stage gravity oil water separator followed by three upflow plate coalescing oil water separators. The fuel reclamation system is not designed to treat wastewaters but rather to recover fuel for reclaim. As a result, the fuel reclamation system does not involve wastewater treatment unit processes with higher oil removal efficiencies such as de-emulsification and chemical-aided flotation. The oil water separation steps skim recovered fuels into a 20,000 gallon holding tank. The Navy reclaims this oil into a three-to-one recovered to new fuels blend for use in steam boilers. See Photos #4-11 and #4-12 in Section 4.10 of this report on page 28.

Discharge Point – The final sump after the multi-stage oil water separation steps discharges to the sewers, with the sewer connection designated for the purposes of this inspection report as compliance sampling point, IWD-103.

4.4 Pierside Ships Services Sources

In addition to bilge waters, berthed ships generate CHT ships sanitary wastewaters and may generate ballast waters for discharge to the pierside sewers. EPA estimates that Apra Harbor WWTP handles approximately 400,000 gallons per day of CHT ships sanitary on average. A berthed carrier with a 50% increase in ships berthing could double CHT ships sanitary flows. These estimates are based on a current average of 10 berthed ships (February 2010 NAVFAC ESC report, SSR-3450-ENV), and a United Facilities Criteria average estimate of CHT ships sanitary per ship of ~30 gpm for non-carriers and ~125 gpm for carriers (UFC 3-240-02N, 16 Jan 2004).

Bilge waters are segregated for separate handling through the Victor Wharf and Polaris Point BOWTS. The CHT ships sanitary wastewaters discharges untreated through the dedicated risers into the Apra Harbor WWTP domestic sewers. Ballast waters from ships berthed at the fueling piers are delivered by pipeline to the Bldg 1700 FISC Fuel Reclamation System. The handling of other ballast waters was not determined in this inspection. See Sections 3.2, 4.1, and 4.2 on pages 14, 19, and 20, for descriptions of the CHT risers and BOWTS. Also see Photos #3-9 and #3-10 in Section 3.4 of this report on page 17.

4.5 Fena Water Treatment Plant

The Fena Water Treatment Plant provides physical and chemical treatment of surface waters to produce an average of 10.5 mgd of drinking water with ~30% distributed to Naval Base Guam users and 70% to Guam Waterworks Authority customers. The water treatment plant consists of three treatment trains each with a design capacity of 7.5 mgd, usually operated in series to limit the use of the ballast and floc units to turbid waters during storm events.

The surface water treatment involves alum and polymer-aided flocculation and settling, down flow mixed-media filtration to remove particulates and turbidity, chlorination, fluoridation, and acrylamide polymer-aided belt filtration of solids. The mixed-media filter backwashes on a schedule regulated by turbidity and head loss metering. The ballast and floc units use sand-aided laminar honeycomb contact tanks with the sand and sludges separated through hydrocyclones. NAVFAC doses alum at 20-90 mg/l resulting in water supply residuals. NAFVAC is awaiting approval to begin operating a "Miox" bleach generating station to replace chlorine disinfection. Miox uses electrical reduction to produce bleach from salt brine, releasing hydrogen gas and requiring air cooling. NAVFAC also plans to add caustic and phosphate at a target pH of 7.8-8.0 s.u. for water supply corrosion control.

Figure 4.5
Fena Water Treatment Plant – Configuration

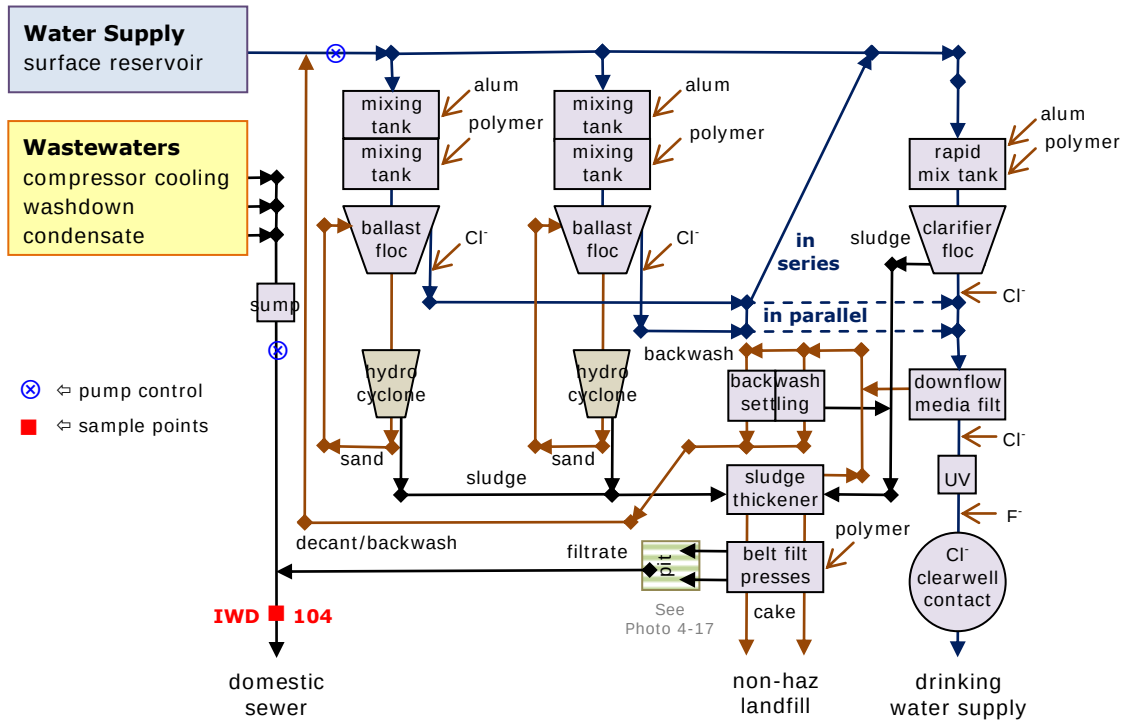

MILCON	Fena Waste Treatment Plant Upgrades
P-256	Installation of corrosion inhibitor chemical injection facility at the Fena WTP
P-256	Replacement of chlorination with Miox on-site bleach disinfection at the Fena WTP

MILCON P-256 completion by Dec 2010

US EPA ARCHIVE DOCUMENT

Sources – The Fena Water Treatment Plant generates flocculation tank sludges and multi-media filter backwash for disposal through on-site solids handling. Solids are thickened and then dewatered through polymer-aided belt filter presses. The belt press filtrate is the only discharge to the domestic sewers from the water treatment process steps. The belt press filtrate carries excess alum and acrylamide polymers. Support processes also generate air compressor cooling water, facility washdown, and condensate for discharge to the sewer. See Photo #4-17 in Section 4.10 of this report on page 29.

Discharge Point – There is no identified sample point that accounts for all wastewater discharges from both water treatment and support. The prospective sample point is designated for the purposes of this inspection report as compliance sampling point, IWD-104.

4.6 DRMO Hazardous Waste Conforming Storage Facility

The Bldg 1790 DRMO Hazardous Waste Conforming Storage Facility handles drummed wastes from the Naval Base Guam, ships at birth, Anderson Air Force Base, and the Drug Enforcement Administration. The collected drummed wastes include waste paints, coolants, spent oils, spent fluorescent bulbs, waste chemicals, lead acid batteries, and oily waters from spill clean-ups. Bldg 1790 has no floor drains, is sloped and bermed, with sealed flooring and enclosed storage bays lifted off the ground. DRMO collects the drummed wastes, sorts, and manifests for shipment to the TSD facilities on the mainland. DRMO also operates an above ground oil water separator for oily waters and a bioremediation pile for the storage of oily soils. DRMO tests oily wastewaters to determine whether to treat on-site or to haul off-site if tested as toxic or too oily (>15 mg/l oil and grease). The bioremediation pile and oil water separator are sited on an uncovered bermed cement pad. See Photo #4-18 in Section 4.10 of this report on page 29.

Sources – There are no discharges to the sewers generated within the Bldg 1790 facility. The bermed cement pad generates uncontrolled drainage from the bioremediation pile and the vacant areas of the pad. The oil water separator drains the water fraction to the pad, with all drainages discharging to the sewer through a single exposed drain that connects to the domestic sewers through an unused below grade oil water separator.

Discharge Point – The old oil water separator connection to the sewer is designated for the purposes of this inspection report as compliance sampling point, IWD-105.

4.7 Transportation Motor Pool Facilities

Sources - Motor pool maintenance facilities are housed in Bldgs 364, 372, 374, and 375. Bldg 364 has floor drains inside the maintenance bays that lead through a dedicated oil water separator for discharge to the sewers. Bldg 372 has an uncovered outside wash rack with a floor drain that leads through a dedicated oil water separator for discharge to the sewers. Bldg 375 is a covered dedicated truck wash facility with drains that lead through a dedicated oil water separator for discharge to the sewers. See Photos #4-20, #4-22, and #4-23 in Section 4.10 of this report on page 30.

US EPA ARCHIVE DOCUMENT

Discharge Point – Each of the dedicated oil water separator connections to the sewers are designated for the purposes of this inspection report as compliance sampling points, IWD-106, IWD-107, and IWD-108. See Photos #4-19, #4-21, and #4-23 in Section 4.10 of this report on page 30.

4.8 Physical Plant Utilities

Bldg 307 Orote Power Plant – The Orote Power Plant operates as a stand-by diesel electric power plant. It consists of three 6.6 MWatt units. The operations generate a number of wastewaters including air compressor condensate, exhaust stack drainage, oily washdown, DI water storage overflow, and cooling circuit expansion tank surge. The designed configure-tion of power plant results in the collection of wastewaters into a floor trench which is pumped into an 8,000 gallon storage tank. NAVFAC has the storage tank pumped out roughly once per year to Gresco for off-site disposal. An unused on-site oil water separator and the cooling circuit expansion tanks both drain through a line that could not be visually traced to the floor trench but rather disappears into the power plant concrete flooring. See Photos #4-24 and #4-25 in Section 4.10 of this report on pages 30 and 31.

Bldg 4907 Demineralizer Plant – The Bldg 4907 Demineralizer Plant uses ion exchange columns with a combined design capacity of 30,000 gallons per day. The demineralizer plant generates a number of wastewaters delivered by hard-piping or by portable pump and hosing to a small pit for pumped storage in a 3,750 gallon holding tank. The collected wastewaters include automatic ion exchange regenerant, spent brines, outdoor drum rack drainage, and chemical drum rinses. NAVFAC tests from the holding tank prior to release to an effluent pit. The effluent pit discharge connection, and the demineralizer storage tank overflow connection to the sewers are designated for the purposes of this inspection report as compliance sampling points, IWD-109, and IWD-110. In addition, demineralizer storage tank overflows discharge to the sewers. See Photos #4-26, #4-27, and #4-28 in Section 4.10 of this report on page 31.

Bldg 4451 Steam Plant – The Bldg 4451 Steam Plant consists of two boilers, each of which generate boiler blowdown, heat exchanger condensate, cooling steam condensate, wash sink drainage, and steam cooling waters, for separate discharge to the sewers. The separate sewer connections from the two boilers are designated for the purposes of this inspection report as compliance sampling points, IWD-111 and IWD-112. See Photos #4-29 and #4-30 in Section 4.10 of this report on page 31.

4.9 Other Non-Domestic Wastewater Sources

Camp Covington – The Seabees operate a vehicle maintenance compound. The Seabees wash down the floors in Bldgs 557A/C/D to floor drains leading to a common oil water separator outside of the vehicle maintenance compound. An uncovered outdoor washrack adjacent to Bldg 563 also drains to the oil water separator. The manhole immediately up-stream from the oil water separator shows evidence of overflowing. Two possible reasons were observed. First, heavy machinery washing over the washrack would be expected to

US EPA ARCHIVE DOCUMENT

generate heavy loadings of muddy solids into the sewer line. Second, the uncovered wash-rack also can accept significant inflow during storms. The oil water separator connection to the sewers is designated for the purposes of this inspection as compliance sampling point IWD-113. See Photos #4-31, #4-32, and #4-33 in Section 4.10 of this report on page 32.

Bldg 4430 Shore Repair Facility – The Bldg 4430 Shore Repair Facility involves an outside machine ship and hydrotest stand. The processes include sawing, grinding, lathe turning, drilling, sanding, and ultrasonic cleaning. The Shore Repair Facility generates hydrotest waters, ultrasonic cleaning spents, and drainage for discharge through floor drains to the sewer. There is no identified compliance sampling point that accounts for all of the Shore Repair Facility non-domestic discharges to the sewers. The prospective connection to the sewer is designated for the purposes of this inspection report at compliance sampling point IWD-114. See Photo #4-34 in Section 4.10 of this report on page 32.

Bldg 585 Laboratory – All wastes including spent chemicals, wash downs, sampled material, and glassware wash are stored in 90-day totes for handling through the Bldg 1790 Hazardous Waste Conforming Storage Facility. See Section 4.6 of this report on page 24.

Bldg 257 NEX Autoport – The vehicle maintenance bays at the Navy Exchange generate drainages from the inside bays and washdown from a covered outdoor car wash. Drainage and washdown drain through an oil water separator to the sewers. The oil water separator connection to the sewer is designated for the purposes of this inspection report as compliance sampling point IWD-115. See Photo #4-35 in Section 4.10 of this report on page 32.

EOD Compound – The Explosives Ordnance Disposal Compound consists of a few buildings with maintenance shops. Bldg 2113 involves boat and truck maintenance shops generate drainage and boat washdown for discharge through floor drains to the sewers. Bldg 2114 involves project staging with drainage discharged through floor drains to the sewers. There is no identified compliance sampling point that accounts for all of the EOD Compound non-domestic discharges to the sewers. The prospective connection to the sewer is designated for the purposes of this inspection report at compliance sampling point IWD-116. See Photo #4-36 in Section 4.10 of this report on page 32.

Sources Not Inspected by EPA – NAVFAC identified other non-domestic sources that EPA did not inspect during this inspection. These other sources include food service establishments, clinics, and light commercial, as well as the following industrial sources:

IWD	Other Non-Domestic	Sewer Discharges	Pretreatment In-Place	gpd
117	Bldg 780 Cold Storage	drainage	-	6000
118	Bldg 1982A Auto Hobby	drainage	-	1300
119	SP-1 Boiler Plant	boiler blowdown	O/W	500
120	Fire Station No.6	drainage	-	1250
121	NAVMAG Fire Station	drainage	-	750

Installation flow estimates from the February 2010 NAVFAC ESC report (SSR-3450-ENV)

US EPA ARCHIVE DOCUMENT

US EPA ARCHIVE DOCUMENT

4.10 Photo Documentation

The 123 digital photographs taken during this inspection are saved to digital file as *guam-001-*date*.jpg* to *guam-123-*date*.jpg*. The photos on this page are of the Victor Wharf BOWTS.

Photo #4-1: SWOB at Victor Wharf
Taken By: Greg V. Arthur
Date: 05/06/10

Photo #4-2: Bilge Pump Station Riser at Victor Wharf
Taken By: Greg V. Arthur
Date: 05/06/10

Photo #4-3: Victor Wharf BOWTS – 50kgal EQ Tank
Taken By: Greg V. Arthur
Date: 04/26/10

Photo #4-4: Victor Wharf BOTWS – Chem Treat Unit
Taken By: Greg V. Arthur
Date: 04/26/10

Photo #4-5: Victor Wharf BOWTS – IAF Unit
Taken By: Greg V. Arthur
Date: 04/26/10

Photo #4-6: Victor Wharf BOWTS – Discharge Point
Taken By: Greg V. Arthur
Date: 04/26/10

The photos on this page are of the Polaris Point BOWTS and the FISC Fuel Reclamation System.

Photo #4-7: Bravo Wharf Bilge Sewer Riser
Taken By: Greg V. Arthur
Date: 04/28/10

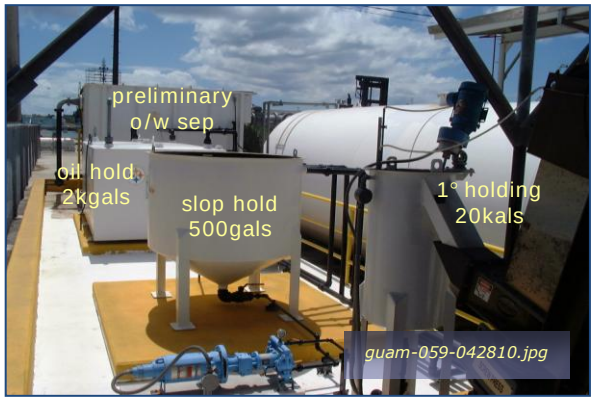

Photo #4-8: Polaris Point BOWTS – Treatment Units
Taken By: Greg V. Arthur
Date: 04/28/10

Photo #4-9: Polaris Point BOWTS – DAF Unit
Taken By: Greg V. Arthur
Date: 04/28/10

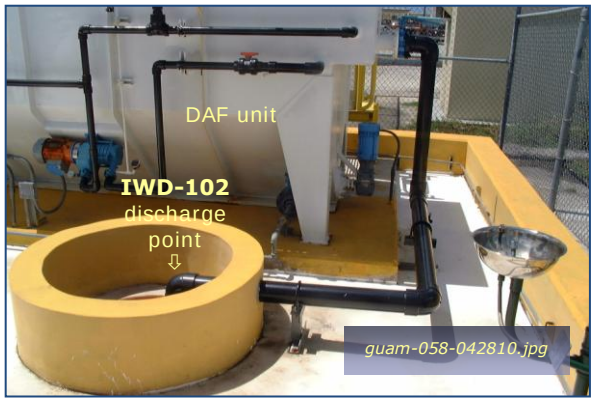

Photo #4-10: Polaris Point BOTWS – Discharge Point
Taken By: Greg V. Arthur
Date: 04/28/10

Photo #4-11: FISC Fuel Farm – O/W Gravity Sep
Taken By: Greg V. Arthur
Date: 04/28/10

Photo #4-12: FISC Fuel Farm – O/W Plate Coalesce
Taken By: Greg V. Arthur
Date: 04/28/10

US EPA ARCHIVE DOCUMENT

The photos on this page are of the FISC Fuel Reclamation System, the FISC Fueling Piers, the Fena Water Treatment Plant, and the DRMO Bioremediation Pad.

Photo #4-13: FISC Fuel Farm – Tank Bottom Draw
Taken By: Greg V. Arthur
Date: 04/28/10

Photo #4-14: FISC Fuel Farm – Bottom Fill Drains
Taken By: Greg V. Arthur
Date: 04/28/10

Photo #4-15: FISC Fuel Farm – Tank Berm Drain
Taken By: Greg V. Arthur
Date: 04/28/10

Photo #4-16: FISC Fueling Pier – Containment Drain
Taken By: Greg V. Arthur
Date: 04/28/10

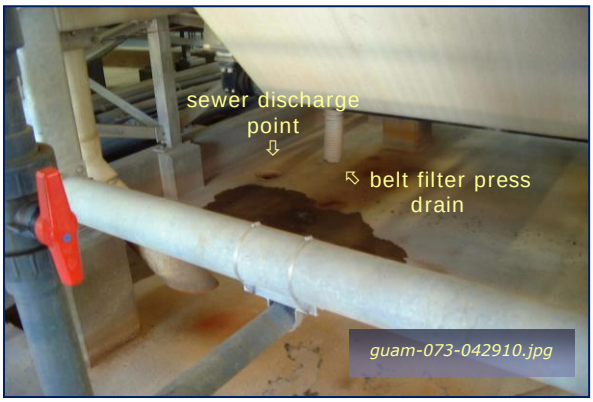

Photo #4-17: Fena WTP – Belt Filtrate Discharge
Taken By: Greg V. Arthur
Date: 04/29/10

Photo #4-18: DRMO Haz Waste Facility - Pad
Taken By: Greg V. Arthur
Date: 04/26/10

US EPA ARCHIVE DOCUMENT

The photos on this page are of the Transportation Motor Pool in Bldgs 364, 372, and 373, and the Bldg 307 Orote Power Plant.

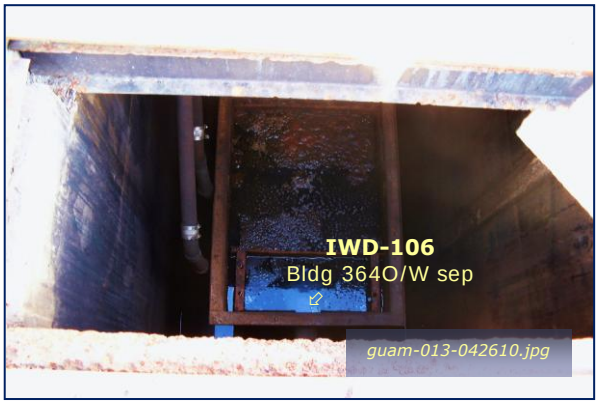

Photo #4-19: Bldg 364 Motor Pool – O/W Sep Vault
Taken By: Greg V. Arthur
Date: 04/26/10

Photo #4-20: Bldg 364 Motor Pool – Floor Drains
Taken By: Greg V. Arthur
Date: 04/26/10

Photo #4-21: Bldg 372 Outdoor Washrack - O/W Sep
Taken By: Greg V. Arthur
Date: 04/26/10

Photo #4-22: Bldg 372 Outdoor Washrack
Taken By: Greg V. Arthur
Date: 04/26/10

Photo #4-23: Bldg 375 Outdoor Washrack – O/W Sep
Taken By: Greg V. Arthur
Date: 04/26/10

Photo #4-24: Bldg 307 Orote Power Plant – 8K Hold
Taken By: Greg V. Arthur
Date: 04/28/10

US EPA ARCHIVE DOCUMENT

The photos on this page are of the Bldg 4907 Demineralizer Plant, Bldg 4451 Steam Plant, and the EOD compound in Bldgs 2113 and 2114.

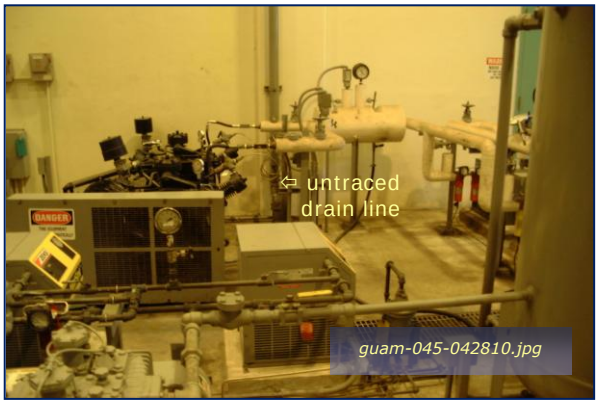

Photo #4-25: Bldg 307 Orote Power Plant - Drain
Taken By: Greg V. Arthur
Date: 04/28/10

Photo #4-26: Bldg 4907 Demin Plant – Rack Drain
Taken By: Greg V. Arthur
Date: 04/28/10

Photo #4-27: Bldg 4907 Demin Plant - Discharge
Taken By: Greg V. Arthur
Date: 04/28/10

Photo #4-28: Bldg 4907 Demin Plant – IX Unit
Taken By: Greg V. Arthur
Date: 04/28/10

Photo #4-29: Bldg 4451 Steam Plant – Boiler Line 1
Taken By: Greg V. Arthur
Date: 04/28/10

Photo #4-30: Bldg 4451 Steam Plant – Boiler Line 2
Taken By: Greg V. Arthur
Date: 04/28/10

US EPA ARCHIVE DOCUMENT

The photos on this page are of the Bldgs 557/563 Seabeas Vehicle Shops, Bldg 4430 Shore Repair Facility, and the Bldg 257 NEX Autoplex.

Photo #4-31: Bldg 563 Outdoor Washrack
Taken By: Greg V. Arthur
Date: 04/28/10

Photo #4-32: Bldg 557C – Example Floor Drain
Taken By: Greg V. Arthur
Date: 04/28/10

Photo #4-33: Seabeas Vehicle Shops – O/W Sep
Taken By: Greg V. Arthur
Date: 04/28/10

Photo #4-34: Bldg 4430 Shore Repair Facility
Taken By: Greg V. Arthur
Date: 04/28/10

Photo #4-35: Bldg 257 NEX Autoport – O/W Sep
Taken By: Greg V. Arthur
Date: 04/29/10

Photo #4-36: Bldg 2113 EOD – Example Floor Drain
Taken By: Greg V. Arthur
Date: 04/28/10

US EPA ARCHIVE DOCUMENT

US EPA ARCHIVE DOCUMENT

5.0 Guam Shipyard Wastewater Sources

There are a handful of Guam Shipyard sources of non-domestic wastewater into the Apra Harbor Wastewater Treatment Plant. The main non-domestic source is CHT ships sanitary from the ships at berth at the wharves. During this inspection, EPA identified and inspected five Guam Shipyard sources of non-domestic wastewaters into the Apra Harbor sewer system. Their discharge points are designated in for the purposes of this report as IWD-201 through IWD-204.

IWD	EPA ID'ed Non-Domestic	Sewer Discharges	Pretreatment In-Place	Gpd
201	Bldg 20 Shops 51/31	wet booth,mop water,ultrasonic	-	50
202	Papa Wharf Washrack	bilge,oily waters,drainage	O/W EQ	~
203	Bldg 2078 Compressor	cool bleed,condensate,drainage	EQ	000
204	Bldg 27 Paint Shop	paint booth blowdown,drainage	-	~
-	CHT Risers @ Wharves	ships sanitary from avg 4 ships	-	150000

KEY	EQ	equalization	O/W	oil water separation

Installation flow estimates from the February 2010 NAVFAC ESC report (SSR-3450-ENV)
CHT flow estimates from ~30 gpm average per non-CVN ship (UFC 3-240-02N, 16 Jan 2004)

Requirements

- Repair of the pump station serving the floating dry dock must be completed before the restart of dry dock operations.

Recommendations

- Bldg 20 Shop 31 floor drains near the small lathes should be traced to where they lead.
- The collection, handling, and disposal of ballast water should be verified.

5.1 Machining and Structural Shops

Bldg 20 and Bldg 21 house the main machining and structural shops. Most facility activities do not generate wastewaters for discharge to the sewers.

Bldg 20 Shop 51 Inside Motor Repair and Rewind – Dry operations include bead blasting, air quenched curing, rewinding, and a varnish tank within a sump. A wet-curtain paint booth generates a scrubber blowdown for discharge once every two months to the sewers. Floor cleaning mop waters discharge once per week through a shop sink to the sewers. An ultrasonic cleaning station also drains to the sewers. These wastewaters all drain to a single sewer connection designated for the purposes of this inspection report as compliance sampling point, IWD-201. See Photo #5-1 in Section 5.6 of this report on page 36.

Bldg 20 Shop 31 Machining – There are no identified and active discharges to the sewers from Shop 31. Machine shop operations include grinding, vertical and horizontal lathe

turning, milling, band sawing, a pump and valve shop, a covered steam cleaning rack, and an inactive ultrasonic cleaning station. Oily coolant spills and drag-out are blotted up with adsorbent pads. The hydrotest waters and sink drainage from the pump and valve shop collect into a sump for off-site disposal or if non-oily for delivery to the Papa Wharf oily wastewater treatment unit. Steam cleaning drainage from the steam rack collects into a second sump for off-site disposal. The ultrasonic cleaning station drains to IWD-201. A few floor drains near the small lathes could not be traced either to the sewers or to the collection sumps.

Other Bldg 20 Shops – The other shops in Bldg 20 do not have floor drains. Outside Mechanical Shop 38 generates no wastewaters from engine repair, deactivated chain cleaning, and other steps. The Calibration Lab generates no wastewaters from electronics calibration, sign engraving, and other steps.

Bldg 21 Shops – No wastewaters are generated by Wood Shop 64, Lighting Shop 41, Rigging Shop 72R (zinc plug casting for wire cable ends, sand blasting, repairing), Sheet Metal Shop 17 (drilling, grinding, fabrication), Pipe Shop 56 (tube bending), and Structural Shop X-17 (heavy sheet metal work, torch cutting, hand grinding, welding without cooling, old prop shop, and to include plasma jet cutting).

5.2 Oily Wastewater Treatment Unit

Delivery – Bilge water and oily wastewaters were collected by contractor to holding tanks for transfer to tanker trucks for off-site disposal. Upon start-up of the Papa Wharf Oily Wastewater Treatment Unit, the collected bilge and oil wastewaters would be delivered by tote to the unit. See Photo #5-2 in Section 5.6 of this report on page 36.

Treatment, Discharge and Residuals – The Papa Wharf Oily Wastewater Treatment Unit provides gravity oil water separation and skimming to remove oils. Recovered oils drain by hard pipe to an oil storage tank, for potential reclaim or hauling off-site for disposal. The tail waters will drain by pump and hose to an existing outdoor washrack with a permanent sewer connection. See Photo #5-3 in Section 5.6 of this report on page 36.

Discharge Point - The Papa Wharf outdoor washrack sewer connection is designated for the purposes of this inspection report as compliance sampling point, IWD-202. See Photo #5-4 in Section 5.6 of this report on page 36.

5.3 Pierside Ships Services Sources

In addition to bilge waters, berthed ships generate CHT ships sanitary and perhaps also ballast waters for discharge to the sewers. EPA estimates that Apra Harbor WWTP handles approximately 400,000 gallons per day of CHT ships sanitary on average. For the purposes of this report it was assumed that the Guam Shipyard accounts for 40% of the berthing. Bilge waters are segregated for separate handling through hauling for off-site disposal or through the Papa Wharf Oily Wastewater Treatment Unit. The CHT ships sanitary wastewaters discharges untreated through dedicated risers into the Apra Harbor WWTP

US EPA ARCHIVE DOCUMENT

domestic sewers. The handling of ballast waters was not determined in this inspection. See Section 3.2 on pages 14 for a description of the CHT risers and Section 4.4 on page 22 for bilge flow estimates. Also see Photos #3-7 and #3-8 in Section 3.4 of this report on page 17.

5.4 Floating Drydocks

The Guam Shipyard has two auxiliary floating drydocks. The Machinist (AFDB-8), classified as a large auxiliary floating drydock, is operational and berthed on the west side of the property. The Resourceful (AFDM-5), classified as a medium auxiliary floating drydock, is berthed at Papa Wharf but is not now operational.

The Machinist (AFDB-8) operates under a separate NPDES permit that covers discharges of non-contact cooling waters, drydock deck drainage, and vessel hull washing. The permit does not cover ballast, CHT ships sanitary, bilge, fire pressure water, nor tank cleaning and chlorination water. There have been no ships under repair for the past two years. Bilge from vessels in drydock would be handled through collection for hauling to off-site disposal or to the Papa Wharf Oily Wastewater Treatment Unit. The CHT ships sanitary discharge untreated through dedicated risers into the Apra Harbor WWTP domestic sewers. On the date of this inspection, pump station SPS-27 that handles CHT from the dry dock and docked vessels was under repair. The handling of ballast waters was not determined.

5.5 Other Non-Domestic Wastewater Sources

Bldg 2078 Compressor Plant – This facility generates two wastewater streams. Periodic bleeds from a circulating cooling tower and air compressor condensate drain through internal floor trenches to an outside central pit. The pit, which also receives storm water drainage, drains to the sewer over an internal weir box when levels rise high enough. The weir box inlet connection to the sewers is designated for the purposes of this inspection as compliance sampling point IWD-203. See Photo #5-5 in Section 5.6 of this report on page 36.

Bldg 27 Paint Shop – This facility only performs hand painting. The water-curtain paint booths and sand blasting booths have been decommissioned. The sewer connection for the blowdown and drainage of the water-current paint booths is still in place. This connection to the sewers is designated for the purposes of this inspection as compliance sampling point IWD-204. See Photo #5-6 in Section 5.6 of this report on page 36.

Sources Not Inspected by EPA – NAVFAC identified other non-domestic sources that EPA did not inspect during this inspection. These other sources include food service establishments and the following industrial source:

IWD	Other Non-Domestic	Sewer Discharges	Pretreatment In-Place	gpd
205	Bldg 27 Steam Plant	drainage,condensate	-	500

Installation flow estimates from the February 2010 NAVFAC ESC report (SSR-3450-ENV)

US EPA ARCHIVE DOCUMENT

5.5 Photo Documentation

The 123 digital photographs taken during this inspection are saved to digital file as *guam-001-*date*.jpg* to *guam-123-*date*.jpg*. The photos on this page are of the Guam shipyard.

Photo #5-1: Bldg 20 Shop 51 Discharges
Taken By: Greg V. Arthur
Date: 04/27/10

Photo #5-2: Bilge to Holding Tanks to Gresco Tanker
Taken By: Greg V. Arthur
Date: 04/27/10

Photo #5-3: Papa Wharf O/W Treatment
Taken By: Greg V. Arthur
Date: 04/27/10

Photo #5-4: Papa Wharf O/W Treatment – Discharge
Taken By: Greg V. Arthur
Date: 04/27/10

Photo #5-5: Bldg 2078 Compressor Plant
Taken By: Greg V. Arthur
Date: 04/27/10

Photo #5-6: Bldg 27 Paint Shop – Sewer Connection
Taken By: Greg V. Arthur
Date: 04/27/10

US EPA ARCHIVE DOCUMENT

6.0 Compliance with NPDES Permit Requirements

The Apra Harbor WWTP must meet effluent limits for conventional pollutants, nutrients, oil and grease, bacteria, residual chlorine, and metals, and removal rates for BOD and TSS.

The receiving waters must meet the prohibitions against sheen, deposits, biota impacts, nutrients, pH, dissolved oxygen, and other indicators of ambient conditions.

Non-domestic wastewaters may not result in unpermitted releases, hazardous or explosive conditions with the sewers, or operational interferences in the collection system.

Apra Harbor sewage sludges must meet the Federal sludge standards in 40 CFR 503.

Summary

The Apra Harbor collection system and wastewater treatment plant has the design capacity and capability to handle the domestic, non-domestic, and ships sanitary wastewaters from Naval Base Guam and the Guam Shipyard. However, consistent compliance with the NPDES permit will not be achieved without the resolution of two conditions. First, the deterioration of the collection system, and to a lesser degree the treatment plant, compromises full secondary treatment, with infiltration and inflow detrimentally effecting removal rates, sewer system failures causing sewage spills, and equipment failures impairing treatment plant operations. The Navy has identified and scoped the corrective actions needed for infrastructure rehabilitation, and has to date obtained partial funding, with completion of Phase I expected by the end of 2011. Second, the NPDES permit limits for metals are unattainable by secondary wastewater treatment and BAT-equivalent source controls.

See Table 6.1 on the next page for a summary of the sample results and permit violation rates for 2008-2010.

Requirements

- All collection system and treatment plant upgrades identified for Phase I and Phases II and III must be completed to resolve infiltration, inflow, spills, and operational issues.

Recommendations

- The installation of a corrosion inhibitor chemical injection facility at the Fena water treatment plant should be completed in order to reduce the domestic leaching of metals.

- The Navy should expand its receiving water monitoring to consistently demonstrate whether the ocean outfall discharge of metals impacts water quality.

- The Navy should expand monitoring of the treatment plant influent and industrial sources to consistently demonstrate equivalence with best-available-technology control of metals.

US EPA ARCHIVE DOCUMENT

- The sewer discharge certification program should include a determination of the best-available-technology treatment or its equivalence for each industrial wastewater source.

- The sewer discharge certification program should include periodic updates of the industrial wastewater inventory, issuance of certificates to all non-domestic discharges, inspections of each certified source at least annually, and submittal of an annual report.

- The Navy should consider in-line preconditioning of CHT ships sanitary wastewaters.

6.1 NPDES Permit Effluent Limits

The discharge from the Apra Harbor wastewater treatment plant continues to consistently exceed the NPDES permit limits for BOD and TSS removal rates, copper, nickel, and aluminum, and on occasion to exceed the limits for enterococci, fecal coliform, residual chlorine, and BOD concentrations. The discharge consistently complies with the limits for TSS concentrations, BOD and TSS loadings, and pH.

Table 6.1
Apra Harbor WWTP – Montoring Results for 2008-2010

Pollutants	Sampling Statistics				Violation Rates			Sample
Jan 2008 – Mar 2010	Mean	min	99th%	max	mo-avg	wk-avg	sample	Events
discharge flow (mgd)	2.12	0.65	3.34	7.98	-	-	-	821
BOD (mg/l)	18.9	1.9	46.6	77.8	4/27	1/116	-	322
TSS (mg/l)	10.2	<1.0	21.4	26.2	0/27	0/116	-	331
BOD loadings (lbs/d)	333	33	853	1338	0/27	0/116	-	314
TSS loadings (lbs/d)	179	11	413	630	0/27	0/116	-	317
BOD removal rate (%)	67.0%	0%	-	100%	25/27	-	-	304
TSS removal rate (%)	83.8%	10%	-	100%	10/27	-	-	311
oil & grease (mg/l)	-	-	-	-	-	-	-	0
enterococci (#/100ml)	63.1	0	733	2420	4/27	-	7/131	131
fecal coliform (#/100ml)	89.5	0	1359	4960	2/27	2/116	-	133
residual-Cl (µg/l)	6.8	0.0	126.5	1230	4/27	-	8/819	819
ammonia (µg/l-N)	86.4	<0.01	1025.3	3720	-	-	-	119
copper (µg/l)	6.9	1.8	14.3	14.8	25/27	-	25/33	33
nickel (µg/l)	10.8	5.1	16.7	16.6	22/27	-	7/33	33
aluminum (µg/l)	316	98	706	741	26/27	-	25/33	33
zinc (µg/l)	18.6	<0.1	44.2	63.9	-	-	-	27
pH (s.u.)	6.71 min – 7.34 med – 8.04 max				-	-	0/350	350
influent flow (mgd)	2.30	0.59	3.57	7.98	-	-	-	825
influent BOD (mg/l)	72.8	9.7	198.2	482.0	-	-	-	308
influent TSS (mg/l)	157.3	12.0	898.0	3550.0	-	-	-	315

Conventional Pollutants – The Apra Harbor WWTP produces secondary-treated wastewater that is usually of better quality than secondary with average and calculated 99th% peaks of

US EPA ARCHIVE DOCUMENT

19 and 47 mg/l BOD effluent, and 10 and 21 mg/l TSS effluent. These sampling results indicate that the statistical probabilities of violating the BOD and TSS effluent permit limits are essentially 0% in any week and less than 8% in any month, although all four monthly-average violations for BOD occurred in one five month period. The treatment plant upgrades under MILCON P-262 are expected to improve the operational performance and thereby reduce both the mean and variability of the average BOD concentrations. See Section 3.1 of this report on page 12.

Removal Rates – Because of infiltration, inflow, and perhaps ships sanitary as well, the Apra Harbor influent arrives weaker than typical domestic sewage (150-200 mg/l BOD/TSS), with influent averages of 73 mg/l BOD and 157 mg/l TSS. As a result, the BOD and TSS removal rates average just 67% and 84%, respectively, with either or both falling below the 85% NPDES permit limits in all but two of the 27 months from January 2008 through March 2010. Better removals at the treatment plant would improve performance, but consistent compliance with the removal rate limits is expected only upon completion of the collection system upgrades under MILCONs P-534 and P-535.

Pathogens and Disinfection – The discharge for the most part complies with the NPDES permit limits for enterococci, fecal coliform, and residual chlorine. The treatment plant upgrades under MILCON P-262 will result in the replacement of chlorine disinfection with on-site generated bleach and sulfur dioxide dechlorination with sodium metabisulfite. These steps should result in consistent compliance with pathogen and disinfection limits when coupled with the better operational performance expected through treatment plant upgrades, and the attenuation of inflow expected through collection system upgrades.

Ammonia Toxicity and Nutrients - The NPDES permit does not set effluent limits for nutrients although there are receiving water standards for orthophosphates, ammonia, and nitrate-nitrogen, and permit required effluent monitoring for ammonia. The monitoring shows Apra Harbor effluent with much lower ammonia levels than typical secondary treated sewage (10-15 mg/l NH_3-N). Since 2008, effluent ammonia averaged 0.086 mg/l, a low level consistent with nitrification even though the treatment plant is not configured or operated to provide it. Nearly all sample results were near the detection limits with most of the higher results registered during a three month period in early 2008, and no single sample over 3.8 mg/l. As a result, ammonia toxicity would not be expected, especially with the better operational performance upon completion of the treatment plant and collection system upgrades.
.

Aluminum – The principal sources of aluminum into the Apra Harbor sewers appear to be excess alum dosing into the drinking water and the discharge of residuals from the Fena water treatment plant to the sewers. Toward the second source, the Navy installed a solids removal system at the water treatment plant to limit discharge to belt filter press filtrate. As a result, the average effluent aluminum concentration dropped over 50% from 0.647 mg/l (2005-2007) to 0.316 mg/l (2008-2010). A further drop below the monthly-average NPDES permit limit of 0.120 mg/l likely would require optimized control of alum dosage rates in order to minimize excess alum in the drinking water supply. It is not clear whether dosing control could be further optimized. Other secondary sources of aluminum might be CHT ships sanitary, the demineralizer plant, and anodic protection. Scheduled monitoring of the non-domestic sources would identify any significant sources. See Section 6.2 on page 40.

US EPA ARCHIVE DOCUMENT

US EPA ARCHIVE DOCUMENT

Copper – The principle source of copper into the Apra Harbor sewers is likely the corrosion of the drinking water distribution pipes and fixtures. The Navy has funded the installation of a corrosion control unit at the Fena water treatment plant to narrow the pH of the drinking water supply to be a slightly alkaline 7.8 to 8.0 s.u.. There are numerous smaller sources of copper which nevertheless may prove to be as significant given the stringent NPDES permit limits. These sources might include CHT ships sanitary, the two bilge oily wastewater treatment units, the FISC fuel reclamation unit, heat exchanger coil and cooling tower corrosion, and vehicle maintenance shops. Scheduled monitoring of the non-domestic dischargers would identify any significant copper sources. Scheduled monitoring of the treatment plant influent would also allow the comparison with other wastewater utilities and determination of trends. See Section 6.2 below.

Nickel – The principle source has been identified as internal corrosion of the stainless steel CHT systems on-board ships. There are no other likely significant sources of nickel. It may be possible to form insoluble nickel hydroxides particles for solids contact removal in the sewer lines through targeted pH control of the CHT ships sanitary. One possible method could involve caustic dosing into the wet well of key lift stations handling CHT ships sanitary. Scheduled monitoring of the non-domestic dischargers would identify any other significant nickel sources. See Section 6.2 below.

6.2 Receiving Water Standards for Copper, Nickel, and Aluminum

The water quality standards for aluminum, copper, and nickel are applied to the Apra Harbor wastewater treatment plant effluent without a zone-of-initial-dilution adjustment. Ocean mixing occurs as the density differences cause fresh water effluent to rise from the outfall diffusers to the surface. Many dischargers in EPA Region 9 with ocean or bay outfalls have zone-of-initial-dilution adjustments of their receiving water quality standards for toxic metals in their NPDES permits. As a result, the Apra Harbor permit limits for copper (2.9 µg/l) and nickel (8.2 µg/l) are more stringent than those established for any other ocean discharging military installation or municipality in EPA Region 9. In addition, EPA believes the unadjusted permit limits for copper and nickel would be unattainable for any municipality or sewer district with an EPA-approved pretreatment program for source control and fully functioning secondary or tertiary treatment.

Influent monitoring for copper, nickel, and aluminum would establish whether the source controls into the Apra Harbor sewers match or exceed those in other municipalities, sewer districts, and military installations. More frequent receiving water monitoring from the NPDES permit identified points and additional background sites could demonstrate whether the waters impacted by the outfall discharge differ in water quality from background. A comparison of permit limits, influent, and effluent values for various ocean and bay outfalls in EPA Region 9 follows on the next page.

The ocean water quality standards for California and Hawaii are similar to those for Guam (~2.9 µg/l copper, ~8.3 µg/l nickel). For these and other toxic metals, both California and Hawaii apply zone-of-initial-dilution factors to the water quality standards for submerged ocean outfall discharges. San Jose has the most stringent limits because the outfall discharges

into the shallow end of the San Francisco Bay resulting in a dilution factor under five. East Bay MUD discharges into the deeper portion of the San Francisco Bay resulting in a dilution factor of ten. The others discharge through deep water ocean outfalls which result in double and triple digit zone-of-initial-dilution factors. As a result, the NPDES permits for the deep water ocean dischargers do not apply limits for these toxic metals since there is no reasonable potential to exceed the water quality standards at the edges of their zones-of-initial-dilution.

Copper (µg/l) 2009	Treatment Level	Industrial Pretreat	NPDES Limit	effluent			influent
				Mean	99th%	Max	mean
USN Apra Harbor	2°	pending	2.9	6.9	14.3	14.8	-
USN Ft Kam ①	3° nitr/dnitr	certificate	②	8.6	40.5	51.0	42.0
East Bay MUD	2°	yes	37	8.0	13.3	14.0	-
CCH Honouliuli	advanced 1°	yes ③	②	37.5	-	-	64.5
San Jose	3°	yes	12	2.9	4.4	3.9	150.5
Orange Co	1°/2° blend	yes	②	30.5	48.0	47.6	118.0
LA Co Carson	2°	yes	②	3.1	3.9	4.0	159.5

Nickel (µg/l) 2009	Treatment Level	Industrial Pretreat	NPDES Limit	Effluent			influent
				mean	99th%	Max	mean
USN Apra Harbor	2°	pending	8.2	10.8	16.7	16.6	-
USN Ft Kam ①	3° nitr/dnitr	certificate	②	<10	-	-	<10
East Bay MUD	2°	yes	34	4.5	7.1	8.5	-
CCH Honouliuli	advanced 1°	yes ③	②	3.7	-	-	5.7
San Jose	3°	yes	11	3.3	5.6	5.9	14.1
Orange Co	1°/2° blend	yes	②	14.3	19.5	20.5	15.1
LA Co Carson	2°	yes	②	8.4	11.4	10.6	20.7

① Ft Kam data from 2004-2005
② Mixing zone dilution factor resulted in permit monitoring only.
③ CCHonolulu has a pretreatment program, however Honouliuli handles little industrial flow.

Performance is a function of source controls to minimize influent loadings and the level of biotreatment for solids contact removals. All of the listed outfall dischargers have good pretreatment programs that impose best-available-technology treatment or their equivalent to the industrial wastewater sources into their sewers. USN Ft Kam has a sewer discharge certification program considered functionally equivalent to a pretreatment program. San Jose has the highest removal rates (98% for copper and 77% for nickel) because of tertiary treatment. The lowest removal rates are at the primary and primary/secondary blending plants.

6.3 Spill Reduction Through Sewer Rehabilitation

The deterioration of the collection system and the design of old plant and equipment has caused sewage spills. The last reported spill occurred on May 21, 2010 from a failed lift station with an unidentified overflow outfall. Spill reductions would be expected upon completion of the collection system Phase I and Phases II and III upgrades under MILCONs P-534 and P-535. See Sections 3.2 and 3.3 of this report on pages 14 and 15.

US EPA ARCHIVE DOCUMENT