US EPA ARCHIVE DOCUMENT

UNITED STATES ENVIRONMENTAL PROTECTION AGENCY
REGION IX
75 Hawthorne Street
San Francisco, CA 94105

May 28, 2010

In Reply Refer To: WTR-7

Shawn Mckay, Plant Manager
Phoenix Coca-Cola Bottling Company
1850 West Elliot Road
Tempe, Arizona 85282

Re: September 24, 2009 Clean Water Act Inspection

Dear Mr. Mckay:

Enclosed is the May 28, 2010 report for our September 24, 2009 inspection of Phoenix Coca-Cola Bottling Company. Please submit a short response to the findings in Sections 2 to 4, to EPA, Tempe, and ADEQ, by **July 30, 2010**. The main findings are summarized below:

1 Phoenix Coca-Cola Bottling is a significant industrial user within the service area of the Kyrene Water Reclamation Plant, and can dominate the strength and flow into Kyrene. The Tempe permit correctly applies Tempe's local limits and correctly does not apply Federal standards. However, the local limits were not derived to be protective of Kyrene, but were developed by Phoenix for the regional sewer system and adopted by Tempe.

2 The on-site treatment for pH is undersized to handle the variability, strength, and flow of the wastewater discharges to the sewers. As a result, ~15% of the days with continuous self-monitoring registers pH violations at some point during the day. The pH violations below 5.0 s.u. also violate the national prohibitions in 40 CFR 403.5(b)(2). Discharge flow rates over the permit limits were numerous but ceased early last year.

3 The monitoring by Tempe and the self-monitoring are representative over the sampling day and the reporting period. Monitoring for BOD should resume.

I appreciate your helpfulness extended to me during this inspection. I remain available to the City of Tempe, and to you to assist in any way. Please do not hesitate to call me at (415) 972-3504 or e-mail at arthur.greg@epa.gov.

Sincerely,

Original signed by:

Greg V. Arthur
CWA Compliance Office

Enclosure

cc: Mike Golden, Envr Compliance Supervisor, City of Tempe
Gregory Frech, WQ Compliance, ADEQ

US EPA ARCHIVE DOCUMENT

US EPA ARCHIVE DOCUMENT

U.S. ENVIRONMENTAL PROTECTION AGENCY

REGION 9

CLEAN WATER ACT COMPLIANCE OFFICE

NPDES COMPLIANCE EVALUATION INSPECTION REPORT

Industrial User:	Phoenix Coca-Cola Bottling Company 1850 West Elliot Road, Tempe, Arizona 85282 P.O. Box 20008, Phoenix, Arizona 85036-0008 Non-Categorical Significant Industrial User
Treatment Works:	City of Tempe, Kyrene Water Reclamation Plant NPDES Permit No. AZ0023248 Arizona Aquifer Protection Permit No. P-100405 City of Phoenix, 91st Avenue Wastewater Treatment Plant NPDES Permit No. AZ0020524
Pretreatment Program:	City of Tempe
Date of Inspection:	September 22, 2009
Data Review:	January 1, 2007 through March 31, 2010

Inspection Participants:

US EPA:	Greg V. Arthur, Region 9, CWA Compliance Office, (415) 972-3504
Arizona DEQ:	Gregory Frech, Inspector, Water Quality Compliance, (602) 771-7667
City of Tempe:	Amir Jazayeri, Envr Compliance Inspector Michael Golden, Envr Compliance Supervisor, (480) 350-2674
Phoenix Coca-Cola Bottling:	Shawn Mckay, Plant Manager, (480) 756-3466 Lee Bjorkland, Quality Assurance Manager, (480) 345-3139 Stacey Renfrow, Quality System Manager, (480) 756-3421

Report Prepared By: Greg V. Arthur, Environmental Engineer
May 28, 2010

US EPA ARCHIVE DOCUMENT

1.0 Scope and Purpose

On September 24, 2009, EPA and the City of Tempe conducted a compliance evaluation inspection of the Phoenix Coca-Cola Bottling Company, in Tempe, Arizona. The purpose was to ensure compliance with the Federal regulations covering the discharge of non-domestic wastewaters into the sewers. In particular, it was to ensure:

- Classification in the proper Federal categories;
- Application of the correct standards at the correct sampling points;
- Consistent compliance with the standards; and
- Fulfillment of Federal self-monitoring requirements.

The Phoenix Coca-Cola Bottling Company is a significant industrial user ("SIU") within sewer service areas administered by the City of Tempe whose compliance was assessed as part of an on-going EPA evaluation of industrial users in EPA Region 9 by sector. The inspection participants are listed on the title page. Arthur conducted the inspection.

See Appendix 1 on page 12 for a schematic of the layout and configuration of wastewater handling at Phoenix Coca-Cola Bottling and at Tempe's Kyrene Water Reclamation Plant. Photo documentation of this inspection follows in Section 1.7 on pages 5.

1.1 Process Description

The Phoenix Coca-Cola Bottling Company operates seven bottling lines – two carbonated in plastic, two carbonated in aluminum, two non-carbonated/water in plastic, and one fountain bag-in-a-box. The operations involve water preconditioning, syrup blending, ammonia compressor cooling, clean-in-place maintenance, sanitation, and product reject crushing. Phoenix Coca-Cola Bottling does not make any containers. High-fructose corn syrup arrives by tanker car. All other ingredients arrive in barrels. Operations run 24-hours per day, five workdays per week.

Phoenix Coca-Cola Bottling discharges non-domestic wastewaters to the Tempe domestic sewers through a single sewer connection under Tempe permit 012008-01. Domestic sewage discharges through separate connections downstream of the industrial wastewater connection.

1.2 Facility SIC Code

Phoenix Coca-Cola Bottling is assigned the SIC code for bottled and canned soft drinks and carbonated waters (SIC 2086).

1.3 Facility Wastewater Sources

The seven bottling lines and the supporting operations generate water preconditioning ultrafiltration backwash and reverse osmosis reject waters, product spills, clean-in-place

spents and rinses, plant and equipment sanitation wash down, and drainage from the ammonia compressor room and the reject crushing operations. There is one non-domestic connection to the sewers that receives contributions from a simple pH neutralization industrial wastewater treatment plant ("IWTP"). The 2008 Tempe permit identifies final outfall 5033.01 as the sewer connection to the domestic sewers. This compliance sampling point is designated in this report as IWD-5033.01. ***See*** Photos #1 through #3 in Section 1.7 on page 5.

Water Preconditioning – Phoenix Coca-Cola Bottling produces ultra-clean waters as product feed. City water fills two vault surge tanks for metered feeding through ultrafiltration with a 1,500 gpm design capacity. The ultrafiltered water is carbon dechlorinated in-line to an RO feed equalization tank. The feed water draws through four reverse osmosis plants for storage in two treated water equalization tanks. The treated water cycles and circulates through two ultraviolet disinfection and oxidation units. The ultra-clean water preconditioning generates two principle wastestreams, (1) ultrafiltration automatic backwash, and (2) RO reject brines.

Clean-in-Place – Phoenix Coca-Cola Bottling operates separate CIP units for each bottling line as well as for the blending tanks. The CIP units involve alkaline soap cleaning, and phosphoric-acid descaling, with the solutions and rinses all on timers. The CIP unit for water bottling also involves ozone oxidation. The CIP units do not incorporate disinfection. The CIP units generate spent solutions and rinses drained to facility floor drains on schedules.

Ammonia Cooling – Ammonia compressors are used to produce the cooling necessary for production. The ammonia chiller room is outfitted with an automatic pressure loss detection alarm. Any drainage generated in the room drains to a facility floor drain. The ammonia is itself cooled through non-contact evaporator cooling towers. The cooling tower conditioners include sulfuric-acid and polymer but no biocides. Cooling tower blowdown drains to a facility floor drain.

Bottling Lines – The plastic bottling lines use silicone based dry chain lubrication. The aluminum can lines use a liquid link belt phosphate based lubricant. Overfilling, spilled product, scrap, washdown, and other drainages drain to facility floor drains. Plant and equipment is sanitized during the graveyard shift from 12:00a to 8:00a. The sanitation involves a slightly chlorinated foam. Sanitizing washdown drains to facility floor drains.

1.4 Facility Process Wastewater Handling

Discharge – Process wastewaters from Phoenix Coca-Cola Bottling drain through a single sewer connection into the Tempe domestic sewers. The Tempe permit identifies the sewer connection as the final sample point, designated in this report after the permit number as IWD-5033.01. The permit establishes peak discharges of 960 gallons per minute, and 650,000 gallons per day. Effluent metering averaged 638,650 gpd since 2007. ***See*** Photo #3 in Section 1.7 on page 5.

US EPA ARCHIVE DOCUMENT

US EPA ARCHIVE DOCUMENT

Composition - The process-related wastewaters listed in section 1.3 above would be expected to contain product-entrained organics, acidity, chlorinated surfactants, and the minerals entrained in the water supply.

Delivery – All backwashes, rejects, washdown, spents, rinses, and bleeds are delivered by gravity through the floor drains to treatment. ***See*** Photo #1 in Section 1.7 of this report on page 5.

Treatment – All process-related wastewaters drain through a grease trap to two small underground 10,000 gallon pH neutralization reaction vault tanks, plumbed in series. Both pH adjustment vault tanks involve sodium hydroxide dosing and carbon dioxide gas injection. The final pH adjustment tank is followed by a shut-off valve. The treatment tanks can only provide at most 45 minutes of retention time. The pH adjustment tank contents discharge through a sample vault identified as compliance sample point IWD-5033.01 leading to the sewer connection.

See Appendix 1 on page 12 of this report for the configuration and lay-out of the wastewater handling on-site. ***Also see*** Section 3.2 of this report on page 9, and Photo #2 in Section 1.7 of this report on page 5.

1.5 Sampling Record

The Tempe permit requires Phoenix Coca-Cola Bottling to self-monitor for pH and discharge flow rate. The City of Tempe collects its own multiday sampling quarterly for arsenic, cadmium, copper, lead, mercury, selenium, silver, zinc, total cyanide, toxic organics, total dissolved solids, total suspended solids, and chemical oxygen demand. Tempe used to collect samples for beryllium, boron, chromium, manganese, molybdenum, nickel, and biochemical oxygen demand.

1.6 POTW Legal Authorities

The City of Tempe has enacted an ordinance to implement a pretreatment program within the city limits, with the service area sewered either to Tempe's Kyrene Water Reclamation Plant, or to Phoenix's 91st Avenue Wastewater Treatment Plant. Under this authority, in Chapter 27 of the Tempe City Code, Tempe issued permit No.012008-01 authorizing the discharge of non-domestic wastewater from Phoenix Coca-Cola Bottling to the sewers. Phoenix Coca-Cola Bottling discharges into the city domestic sewers leading to the Kyrene Water Reclamation Plant with a diversion to the Phoenix 91st Avenue Wastewater Treatment Plant. ***See*** Appendix 1 on page 12 of this report for the configuration and lay-out of the Kyrene Water Reclamation Plant.

1.7 Photo Documentation

Three of four photographs taken during this inspection are depicted below and saved as *cocacola-01.jpg through -04.jpg.* The fourth photo file was corrupted and not saved.

Photo #1: Floor Drains on Shop Floor
Taken By: Greg V. Arthur
Date: 09/24/09

Photo #2: Second pH Adjust Tank
Taken By: Greg V. Arthur
Date: 09/24/09

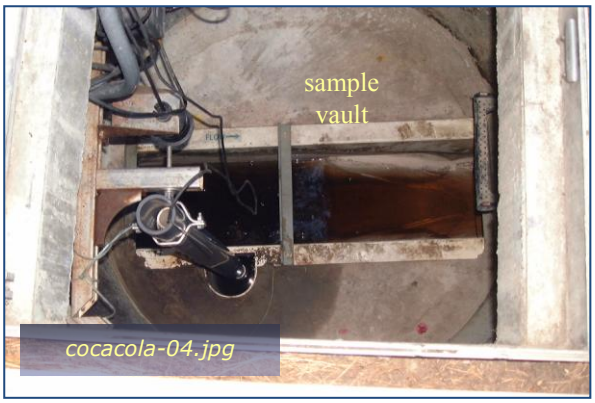

Photo #3: Compliance Sample Point IWD-5033.01
Taken By: Greg V. Arthur
Date: 09/24/09

US EPA ARCHIVE DOCUMENT

US EPA ARCHIVE DOCUMENT

2.0 Sewer Discharge Standards and Limits

Federal categorical pretreatment standards (where they exist), national prohibitions, and the local limits (where they exist) must be applied to the sewered discharges from industrial users. (40 CFR 403.5 and 403.6).

Summary

No Federal categorical pretreatment standards apply to the discharge from Phoenix Coca-Cola Bottling to the Tempe sewers, although the national prohibitions do apply. The Tempe permit applies local limits which are identical to those developed by Phoenix and approved by EPA as technically-based as protective of the Phoenix 91st Avenue WWTP and its contributing sewers. However, Phoenix Coca-Cola Bottling preferentially discharges to the Kyrene water reclamation plant with emergency bypasses to the 91st Avenue WWTP. The application of Federal standards, national prohibitions, and local limits was determined through visual inspection. ***See*** Appendix 2 on page 13 of this report for the permit limits.

Requirements

- None.

Recommendations

- The Tempe permit should apply local limits developed by Tempe and approved by EPA as technically-based as protective of the Kyrene Water Reclamation Plant.

2.1 Classification by Federal Point Source Category

Phoenix Coca-Cola Bottling does not qualify for regulation under any Federal categorical pretreatment standard in 40 CFR 403-471. It does qualify as a significant industrial user under the definitions in 40 CFR 403.3 because the discharge flow rates and pollutant loadings are great enough to pose a risk of adversely impacting the municipal sewerage works. Significant industrial users are required to self-report compliance at least twice per year.

2.2 Local Limits and National Prohibitions

National prohibitions in 40 CFR 403.5 and local limits are meant to express the limitations on non-domestic discharges necessary to protect against adverse impact in the sewers, treatment plants and receiving waters. In particular, they prohibit discharges that can cause the pass-through of pollutants into the receiving waters or reuse, the operational interference of the sewage treatment works, the contamination of the sewage sludge, sewer worker health and safety risks, fire or explosive risks, and corrosive sewer damage. The national prohibitions apply nationwide to all non-domestic sewer discharges. The Tempe local limits apply to non-domestic discharges in the Tempe service areas of the Phoenix 91st Avenue WWTP. They are not technically-based to be protective of the Kyrene Water Reclamation Plant.

2.3 Federal Prohibitions

The Federal standards in 40 CFR 403.17 prohibit the bypassing of any on-site treatment necessary to comply with standards unless the bypass was unavoidable to prevent the loss of life, injury, or property damage, and there were no feasible alternatives. This provision explicitly prohibits bypasses that are the result of a short-sighted lack of back-up equipment for normal downtimes or preventive maintenance. It also explicitly prohibits bypasses that could be prevented through wastewater retention or the procurement of auxiliary equipment. It specifically allows bypasses that do not result in violations of the standards as long as there is prior notice and approval from the sewerage agency or State. The Tempe permit establishes the prohibition against bypassing treatment necessary to comply (Part 5§B-3).

2.4 Compliance Sampling and Point(s) of Compliance

The permit identifies the final outfall IWD-5033.01 as the final compliance sampling point. ***See*** Section 1.3 of this report on page 2. Local limits and the national prohibitions apply end-of-pipe to non-domestic flows. The final outfall is a suitable end-of-pipe sample point representative of the day-to-day non-domestic wastewater discharges from Phoenix Coca-Cola Bottling. Local limits and national prohibitions are instantaneous-maximums comparable to samples of any length. ***See*** Section 4.0 on page 11 and Appendix 3 on page 14.

US EPA ARCHIVE DOCUMENT

3.0 Compliance with Local Limits and National Prohibitions

All non-domestic wastewater discharges to the sewers must comply with local limits and the national prohibitions. 40 CFR 403.5(a,b,d).

Industrial users must comply with the provision restricting the bypass of treatment necessary to comply with any pretreatment standard or requirement. 40 CFR 403.17(d).

The Tempe permit implements local limits developed by Phoenix and incorporated by Tempe as its own local limits. The sample record shows that Phoenix Coca-Cola Bottling has consistently complied with its permit limits for metals, toxic organics, cyanide, pesticides and PCBs, but not for pH or discharge flow rate. There were pH violations registered through continuous self-monitoring on ~15% of the calendar days. The pH measurements below the permit lower limit were also violations the national prohibitions in 40 CFR 403.5(b)(2). Discharge flow rates over the permit limit also were numerous but essentially ceased early last year. The conventional pollutants and certain metals including chromium, nickel, and molybdenum are not regulated by local limits. ***See*** Appendix 3 on page 14 of this report.

Requirements

- The effluent pH must be better controlled to always register above 5.0 s.u.

Recommendations

- The pH neutralization system should be expanded to provide enough capacity to fully attenuate pH peaks over the 24-hour production cycle.
- The pH neutralization tanks should be kept free of accumulated solids, float, and foams.
- Flow reductions in effect should be maintained to keep flow rates below the permit limit.
- Backwash and reject could be reclaimed into the initial CIP steps and plant sanitation.

3.1 National Objectives

The general pretreatment regulations were promulgated in order to fulfill the national objectives to prevent the introduction of pollutants that:

(1) cause operational interference with sewage treatment or sludge disposal,
(2) pass-through sewage treatment into the receiving waters or sludge,
(3) are in any way incompatible with the sewerage works, or
(4) do not improve the opportunities to recycle municipal wastewaters and sludge.

This inspection did not include an evaluation of whether achievement of the national objecttives in 40 CFR 403.2 have been demonstrated fully by the Tempe Kyrene and Phoenix 91st

US EPA ARCHIVE DOCUMENT

Avenue wastewater treatment plants through consistent compliance with their discharge, reclaim, and sludge limits.

3.2 Sampling Results

The sample record consists of continuous self-monitoring for pH and discharge flow rate, and twice per quarter monitoring by Tempe for arsenic, cadmium, copper, lead, mercury, silver, selenium, zinc, total dissolved solids, total suspended solids, toxic organics, pesticides, and total cyanide, and in the past also for fluoride, beryllium, boron, chromium, manganese, molybdenum, nickel, and BOD. EPA evaluated the self-monitoring for January 1, 2008 to March 31, 2010, and city monitoring for January 1, 2007 to September 30, 2009.

The sampling results for IWD-5033.01 consistently comply with Tempe permit limits for all parameters except pH and discharge flow rate. Over the 766 days in the sample record with continuous pH measurements, 86 had daily-minimum measurements that at some point in the day were below 5.0 s.u., with 57 at 4.0-5.0 s.u., 21 at 3.0-4.0 s.u., 6 at 2.0-3.0 s.u., and 2 below 2.0 s.u. Over the same 766 days, 26 had daily-maximum measurements above 10.5 s.u. Also over the 766 days, 58 registered discharge flow rates over the Tempe permit limits, although only one violation occurred over the last 410 consecutive days in the sample record.

These sampling results indicate that the statistical probability of violating the Tempe permit is ~15% on any given day, solely because of pH. The violation rate was ~25% but discharge flow rates since February 2009 have been reduced. The good aspects of (+) and deficiencies with (-) wastewater handling are listed below.

+ Pollutant additives into the discharges are limited to caustic, phosphoric-acid, silicone lube, phosphate lube, sulfuric-acid, polymer, and chlorinated foam sanitizer.
+ No molybdenum-based cooling tower additives were in use.
+ All pollutants sources were identified and treated prior to discharge.
+ The two-stage pH neutralization process is more effective than single stage processes.
+ A shut-off valve provides short-term holding of off-spec flows within the facility sewers.
+ Flow reduction practices include the use of chillers and cooling towers.
- The pH neutralization tank volumes are functionally reduced by foam and solids float.
- Less than 24-hours of surge and treatment capacity does not attenuate daily peaks which makes an effective response to pH changes difficult to do.
- The buffering inherent in TDS levels over 1,700 mg/l hinders rapid pH neutralization.
- The lack of equalization also does not attenuate BOD mass loading peaks.

3.3 Local Limits for Oxygen Demanding Pollutants and The National Prohibition Against Interference

<u>High-Strength Organics</u> – There are no local limits in effect for oxygen demanding pollutants. However, the wastewaters discharged to the sewers are high enough in organics strength to pose a risk of treatment interference since the Phoenix Coca-Cola Bottling discharge can dominate the influent into the Kyrene Water Reclamation Plant, accounting for

US EPA ARCHIVE DOCUMENT

around 50-60% of the influent BOD loadings and 10-20% of the influent flow. The organics strength is also high enough to potentially produce septic conditions in the sewers.

Metals, Cyanide, Toxics – There are no violations in the sample results for the toxics pollutants that could cause an operational interference of a secondary wastewater treatment plant (like Kyrene) thereby resulting in violations of an NPDES permit. Phoenix Coca-Cola Bottling discharges would not be expected to contain metals or cyanide at levels approaching the existing local limits derived to be protective of the Phoenix 91st Avenue Wastewater Treatment Plant nor future local limits expected to be derived to be specifically protective of the Kyrene Water Reclamation Plant. There is no evidence that discharges from Phoenix Coca-Cola Bottling have resulted in any interference.

3.4 Local Limits for Toxic Metals, Cyanide, and Other Pollutants and The National Prohibition Against Pass-Through

Metals and Cyanide – Soft drink bottling would not be expected to generate metals, cyanide, or other toxic pollutants at levels approaching the existing local limits protective of the Phoenix 91st Avenue Wastewater Treatment Plant nor future local limits expected to be derived to be specifically protective of the Kyrene Water Reclamation Plant. Moreover, there is no evidence that discharges from Phoenix Coca-Cola Bottling resulted in the pass-through of any toxic pollutants from both wastewater treatment plants to the receiving waters or sludge, thereby causing violations of the NPDES permits for Tempe or Phoenix.

Oil and Grease – There are no local limits for oil and grease.

3.5 Local Limits for pH and Sulfides, and The National Prohibitions Against Safety Hazards and Corrosive Structural Damage

The pH measurements below 5.0 s.u. not only violate the lower pH limit in the Tempe permit but also the national prohibitions in 40 CFR 403.5(b)(2). Wastes with pHs below 2.0 s.u. would qualify as a characteristic hazardous waste.

Corrosion - Sewer collection system interferences related to the formation of hydrogen sulfide and the resulting acidic disintegration of the sewers are possible since the discharges from Phoenix Coca-Cola Bottling are high-strength enough in biodegradable organics to allow the formation of septic conditions in the sewers.

Flammability - Flammability would not be expected because sampling shows that the discharges to the sewer entrain negligible amounts of volatile organics.

3.6 Bypass Provision

There were no observed methods of bypassing at Phoenix Coca-Cola Bottling. In particular, all wastewaters are delivered to treatment and discharge through the identified sample point.

US EPA ARCHIVE DOCUMENT

4.0 Compliance with Federal Monitoring Requirements

Significant industrial users must self-monitor for all regulated parameters at least twice per year unless the sewerage agency monitors in place of self-monitoring. 40 CFR 403.12(e) & 403.12(g).

Each sample must be representative of the sampling day's operations. Sampling must be representative of the conditions occurring during the reporting period. 40 CFR 403.12(g) and 403.12(h).

Permit Requirements – Phoenix Coca-Cola Bottling is required to self-monitor for pH and flow rate continuously. In lieu of self-monitoring for other pollutants, the City of Tempe collects all samples to determine compliance with the local limits, and does so quarterly on consecutive multiple days. Over the most recent three year period, the sample records for the final outfall, IWD-5033.01, show that the City of Tempe (1) collected all samples from the designated compliance sampling point, (2) correctly obtained 24-hour composites for metals and grabs for the other pollutants, and (3) followed appropriate chain-of-custody procedures. The sample record also shows that Phoenix Coca-Cola Bottling measured for pH and flow continuously at the designated compliance sampling point as required by the permit.

Representativeness – The sample record for IWD-5033.01 appears to be representative of the discharges to the sewers over the sampling day and the six-month reporting period.

Requirements

- ***See*** Appendix 3 on page 14 of this report for the self-monitoring and city monitoring requirements that would be considered to be representative of the discharges.

Recommendations

- None.

US EPA ARCHIVE DOCUMENT

Appendix 1
Configuration and Layout

Phoenix Coca-Cola Bottling Company

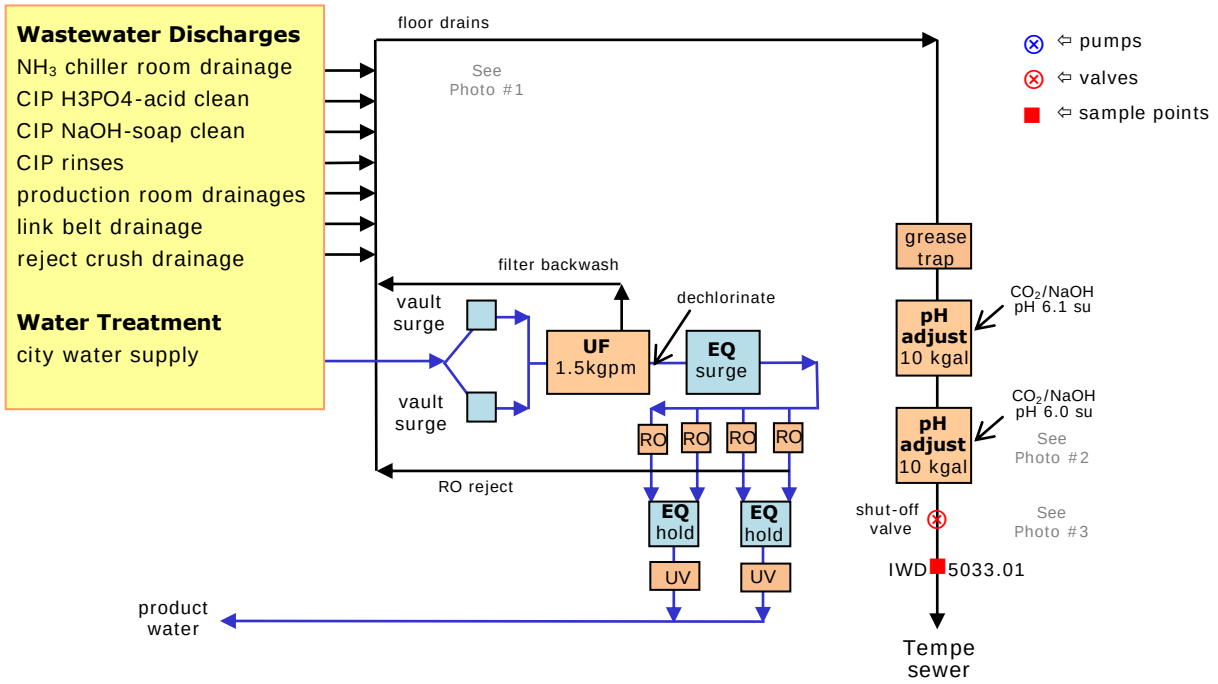

Kyrene Water Reclamation Plant

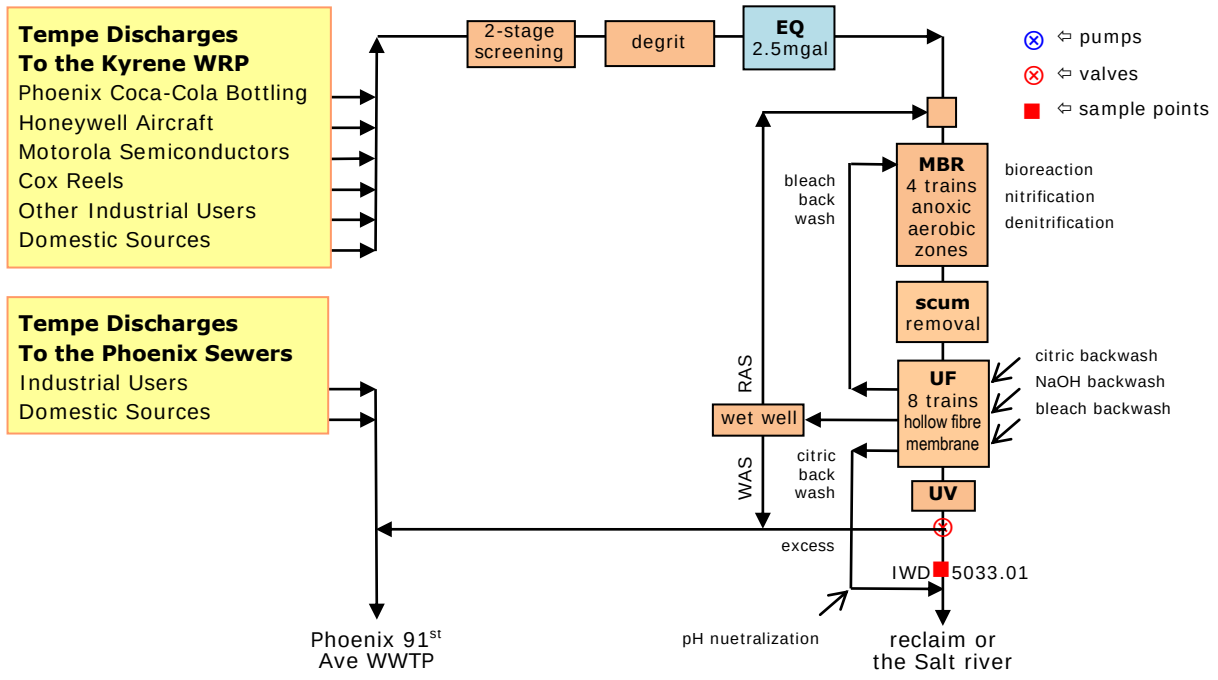

US EPA ARCHIVE DOCUMENT

Appendix 2
Sewer Discharge Standards and Limits for Phoenix Coca-Cola Bottling

Pollutants Of Concern	Fed stds (d-max)	Fed stds (mo-avg)	nat'l pro (instant)	local limits (inst/dmax)	monitoring frequency ① discharger	city
Final Outfall @ IWD-5033.01						
arsenic (mg/l)	-	-	-	0.13	③	2/quarter
cadmium (mg/l)	-	-	-	0.047	③	2/quarter
copper (mg/l)	-	-	-	1.5	③	2/quarter
lead (mg/l)	-	-	-	0.41	③	2/quarter
mercury (mg/l)	-	-	-	0.0023	③	2/quarter
selenium (mg/l)	-	-	-	0.10	③	2/quarter
silver (mg/l)	-	-	-	1.2	③	2/quarter
zinc (mg/l)	-	-	-	3.5	③	2/quarter
total cyanide (mg/l)	-	-	-	2.0	③	2/quarter
benzene (mg/l)	-	-	-	0.035	③	2/quarter
chloroform (mg/l)	-	-	-	2.0	③	2/quarter
pesticides and PCBs	-	-	-	⑤	③	2/quarter
BOD (mg/l)	-	-	-	-	③	**2/quarter**
TSS (mg/l)	-	-	-	-	③	2/quarter
TDS (mg/l)	-	-	-	-	③	2/quarter
fluoride (mg/l)	-	-	-	-	③	②
flow (gpd)	-	-	-	650,000	continuous	n/a
pH (s.u.)	-	-	<5.0	5.0-10.5	continuous	2/quarter
explosivity	-	-	<140°F ④	<10% LEL	③	③

① Recommended reductions in green. Recommended **increases in red**.
② Sampling in previous years included BOD, F, Be, B, Cr, Mn, Mo and Ni.
③ As part of periodic priority pollutant scans in order to identify changes in discharge quality.
④ Closed-cup flashpoint.
⑤ City ordinance prohibits the introduction of these pollutants in any amount.

US EPA ARCHIVE DOCUMENT

Appendix 3
Wastewater Discharge Quality for Phoenix Coca-Cola Bottling

Sample Record Summary for IWD-5033.01 (01/01/07-09/30/09)

pollutants (µg/l)	effluent sampling results				violation rate ①			sample count
	mean	99th%	min	max	d-max	mo-av	instant	
arsenic	<50	<50	<50	<50	-	-	0/22	22
beryllium	<1	<1	<1	<1	-	-	-	11
boron	218.2	341.4	150	380	-	-	-	11
cadmium	<5	<5	<5	<5	-	-	0/22	22
chromium	<50	<50	<50	<50	-	-	-	11
copper	<50	<50	<50	<50	-	-	0/22	22
lead	<100	<100	<100	<100	-	-	0/22	22
mercury	<0.2	<0.2	<0.2	<0.2	-	-	0/22	22
manganese	<20	<20	<20	<20	-	-	-	11
molybdenum	<50	<50	<50	<50	-	-	-	11
nickel	<50	<50	<50	<50	-	-	-	11
selenium	<20	<20	<20	<20	-	-	0/22	22
silver	<10	<10	<10	<10	-	-	0/22	22
zinc	103.6	176.7	58	180	-	-	0/22	22
total cyanide	2.2	17.3	<5	41	-	-	0/22	22
total toxic organics ②	224.4	1052.9	<10	1357	-	-	0/22	22
BOD (mg/l)	1035.2	1863.4	584	1880	-	-	-	19
TSS (mg/l)	64.1	318.8	13	541	-	-	-	22
TDS (mg/l)	1723.6	2751.2	870	2500	-	-	-	22
fluoride (mg/l)	0.66	1.45	0.31	1.50	-	-	-	19

Sample Record Summary for IWD-5033.01 (01/01/08-03/31/10)

pollutants (µg/l)	effluent sampling results				violation rate ①			sample count
	mean	99th%	min	max	d-max	mo-av	instant	
flow (gpd) ③	381691	792946	160	820500	**58/766**	-	-	766
pH (s.u.) daily-min ④	1.72 min – 5.77 median – 6.51 max				-	-	**86/766**	766
pH (s.u.) daily-max ④	6.22 min – 7.55 median – 12.22 max				-	-	**26/766**	766

① Monthly averages calculated by calendar month of both self-monitoring and Tempe samples.
② TTO sampling covers benzene, chloroform, pesticides, PCBs - no violations recorded.
③ All flow rate violations but one recorded before 02/12/09. The violation rate was **1/406** since then.
④ Sample record consists of continuous pH measurements reported as daily ranges.

US EPA ARCHIVE DOCUMENT

Appendix 5 (page 1 of 3)
Violation Summary for Phoenix Coca-Cola Bottling

Local Limits Violations (01/01/08-03/31/10)							
sample dates	type	sampler	point	permit local limits ①②		viols	Days
02/14/10	continuous	IU	5033.01	pH – daily-maximum	10.5 s.u.	10.6	1
01/09/10 ①	continuous	IU	5033.01	pH – daily-minimum	5.0 s.u.	4.83	1
01/04/10 ①	continuous	IU	5033.01	pH – daily-minimum	5.0 s.u.	2.41	1
12/12/09 ①	continuous	IU	5033.01	pH – daily-minimum	5.0 s.u.	2.02	1
12/06/09 ①	continuous	IU	5033.01	pH – daily-minimum	5.0 s.u.	1.81	1
12/03/09 ①	continuous	IU	5033.01	pH – daily-minimum	5.0 s.u.	2.25	1
10/03/09 ①	continuous	IU	5033.01	pH – daily-minimum	5.0 s.u.	4.52	1
09/26/09	continuous	IU	5033.01	pH – daily-maximum	10.5 s.u.	11.36	1
09/25/09	continuous	IU	5033.01	pH – daily-maximum	10.5 s.u.	11.47	1
09/24/09 ①	continuous	IU	5033.01	pH – daily-minimum	5.0 s.u.	2.28	1
09/23/09 ①	continuous	IU	5033.01	pH – daily-minimum	5.0 s.u.	4.7	1
09/18/09 ①	continuous	IU	5033.01	pH – daily-minimum	5.0 s.u.	4.93	1
09/14/09 ①	continuous	IU	5033.01	pH – daily-minimum	5.0 s.u.	4.73	1
09/12/09 ①	continuous	IU	5033.01	pH – daily-minimum	5.0 s.u.	4.93	1
09/07/09	continuous	IU	5033.01	pH – daily-maximum	10.5 s.u.	10.54	1
08/23/09 ①	continuous	IU	5033.01	pH – daily-minimum	5.0 s.u.	4.76	1
08/22/09	continuous	IU	5033.01	pH – daily-maximum	10.5 s.u.	10.63	1
08/21/09 ①	continuous	IU	5033.01	pH – daily-minimum	5.0 s.u.	4.67	1
08/14/09	continuous	IU	5033.01	pH – daily-maximum	10.5 s.u.	10.62	1
08/09/09 ①	continuous	IU	5033.01	pH – daily-minimum	5.0 s.u.	4.98	1
08/01/09 ①	continuous	IU	5033.01	pH – daily-minimum	5.0 s.u.	4.01	1
07/25/09 ①	continuous	IU	5033.01	pH – daily-minimum	5.0 s.u.	4.25	1
07/18/09 ①	continuous	IU	5033.01	pH – daily-minimum	5.0 s.u.	4.8	1
07/10/09 ①	continuous	IU	5033.01	pH – daily-minimum	5.0 s.u.	4.72	1
07/09/09 ①	continuous	IU	5033.01	pH – daily-minimum	5.0 s.u.	4.75	1
07/08/09 ①	continuous	IU	5033.01	pH – daily-minimum	5.0 s.u.	4.8	1
07/07/09 ①	continuous	IU	5033.01	pH – daily-minimum	5.0 s.u.	4.82	1
06/27/09 ①	continuous	IU	5033.01	pH – daily-minimum	5.0 s.u.	4.83	1
06/26/09 ①	continuous	IU	5033.01	pH – daily-minimum	5.0 s.u.	4.16	1
06/24/09 ①	continuous	IU	5033.01	pH – daily-minimum	5.0 s.u.	4.61	1
06/22/09 ①	continuous	IU	5033.01	pH – daily-minimum	5.0 s.u.	3.94	1
06/18/09 ①	continuous	IU	5033.01	pH – daily-minimum	5.0 s.u.	4.96	1
06/17/09 ①	continuous	IU	5033.01	pH – daily-minimum	5.0 s.u.	4.18	1
06/16/09 ①	continuous	IU	5033.01	pH – daily-minimum	5.0 s.u.	3.47	1
06/10/09 ①	continuous	IU	5033.01	pH – daily-minimum	5.0 s.u.	4.42	1
06/05/09 ①	continuous	IU	5033.01	pH – daily-minimum	5.0 s.u.	3.63	1
06/02/09 ①	continuous	IU	5033.01	pH – daily-minimum	5.0 s.u.	4.82	1
05/29/09 ①	continuous	IU	5033.01	pH – daily-minimum	5.0 s.u.	4.37	1

① The pH measurements below 5.0 s.u. also violate specific national prohibitions in 40 CFR 403.5(b)(2).
② Violations of the permit limit for flow rate are not listed in this table.

US EPA ARCHIVE DOCUMENT

Appendix 5 (page 2 of 3)
Violation Summary for Phoenix Coca-Cola Bottling

Local Limit Violations (01/01/08-03/31/10)							
sample dates	type	sampler	point	permit local limits ①②		viols	days
05/27/09 ①	continuous	IU	5033.01	pH – daily-minimum	5.0 s.u.	4.98	1
05/22/09 ①	continuous	IU	5033.01	pH – daily-minimum	5.0 s.u.	3.97	1
05/21/09 ①	continuous	IU	5033.01	pH – daily-minimum	5.0 s.u.	4.85	1
05/12/09 ①	continuous	IU	5033.01	pH – daily-minimum	5.0 s.u.	4.8	1
05/11/09 ①	continuous	IU	5033.01	pH – daily-minimum	5.0 s.u.	4.83	1
04/18/09 ①	continuous	IU	5033.01	pH – daily-minimum	5.0 s.u.	1.72	1
04/11/09 ①	continuous	IU	5033.01	pH – daily-minimum	5.0 s.u.	4.95	1
04/05/09 ①	continuous	IU	5033.01	pH – daily-minimum	5.0 s.u.	4.98	1
04/03/09 ①	continuous	IU	5033.01	pH – daily-minimum	5.0 s.u.	4.43	1
03/27/09 ①	continuous	IU	5033.01	pH – daily-minimum	5.0 s.u.	4.54	1
03/22/09 ①	continuous	IU	5033.01	pH – daily-minimum	5.0 s.u.	4.38	1
03/03/09 ①	continuous	IU	5033.01	pH – daily-minimum	5.0 s.u.	4.02	1
02/20/09 ①	continuous	IU	5033.01	pH – daily-minimum	5.0 s.u.	4.1	1
02/12/09 ①	continuous	IU	5033.01	pH – daily-minimum	5.0 s.u.	4.08	1
02/05/09 ①	continuous	IU	5033.01	pH – daily-minimum	5.0 s.u.	3.87	1
02/03/09 ①	continuous	IU	5033.01	pH – daily-minimum	5.0 s.u.	3.07	1
01/29/09 ①	continuous	IU	5033.01	pH – daily-minimum	5.0 s.u.	4.0	1
01/22/09 ①	continuous	IU	5033.01	pH – daily-minimum	5.0 s.u.	3.93	1
01/15/09 ①	continuous	IU	5033.01	pH – daily-minimum	5.0 s.u.	3.86	1
01/10/09	continuous	IU	5033.01	pH – daily-maximum	10.5 s.u.	10.52	1
01/07/09 ①	continuous	IU	5033.01	pH – daily-minimum	5.0 s.u.	3.9	1
01/02/09 ①	continuous	IU	5033.01	pH – daily-minimum	5.0 s.u.	3.65	1
12/26/08 ①	continuous	IU	5033.01	pH – daily-minimum	5.0 s.u.	3.96	1
12/20/08 ①	continuous	IU	5033.01	pH – daily-minimum	5.0 s.u.	3.83	1
12/12/08 ①	continuous	IU	5033.01	pH – daily-minimum	5.0 s.u.	3.62	1
12/09/08 ①	continuous	IU	5033.01	pH – daily-minimum	5.0 s.u.	4.98	1
12/05/08 ①	continuous	IU	5033.01	pH – daily-minimum	5.0 s.u.	3.94	1
11/25/08 ①	continuous	IU	5033.01	pH – daily-minimum	5.0 s.u.	3.43	1
11/24/08 ①	continuous	IU	5033.01	pH – daily-minimum	5.0 s.u.	3.43	1
11/23/08 ①	continuous	IU	5033.01	pH – daily-minimum	5.0 s.u.	3.43	1
11/20/08 ①	continuous	IU	5033.01	pH – daily-minimum	5.0 s.u.	3.89	1
11/16/08	continuous	IU	5033.01	pH – daily-maximum	10.5 s.u.	10.76	1
11/14/08 ①	continuous	IU	5033.01	pH – daily-minimum	5.0 s.u.	4.03	1
11/03/08 ①	continuous	IU	5033.01	pH – daily-minimum	5.0 s.u.	4.12	1
11/02/08 ①	continuous	IU	5033.01	pH – daily-minimum	5.0 s.u.	3.81	1
10/30/08 ①	continuous	IU	5033.01	pH – daily-minimum	5.0 s.u.	4.87	1
10/21/08 ①	continuous	IU	5033.01	pH – daily-minimum	5.0 s.u.	4.82	1
10/10/08 ①	continuous	IU	5033.01	pH – daily-minimum	5.0 s.u.	3.77	1

① The pH measurements below 5.0 s.u. also violate specific national prohibitions in 40 CFR 403.5(b)(2).
② Violations of the permit limit for flow rate are not listed in this table.

US EPA ARCHIVE DOCUMENT

Appendix 5 (page 3 of 3)
Violation Summary for Phoenix Coca-Cola Bottling

Local Limit Violations (01/01/08-03/31/10)

sample dates	type	sampler	point	permit local limits ①②		viols	Days
10/09/08 ①	continuous	IU	5033.01	pH – daily-minimum	5.0 s.u.	3.78	1
10/05/08	continuous	IU	5033.01	pH – daily-maximum	10.5 s.u.	10.89	1
10/04/08	continuous	IU	5033.01	pH – daily-maximum	10.5 s.u.	11.1	1
09/27/08 ①	continuous	IU	5033.01	pH – daily-minimum	5.0 s.u.	4.94	1
09/26/08 ①	continuous	IU	5033.01	pH – daily-minimum	5.0 s.u.	4.92	1
09/19/08 ①	continuous	IU	5033.01	pH – daily-minimum	5.0 s.u.	4.64	1
09/18/08 ①	continuous	IU	5033.01	pH – daily-minimum	5.0 s.u.	4.79	1
09/12/08 ①	continuous	IU	5033.01	pH – daily-minimum	5.0 s.u.	4.97	1
09/11/08 ①	continuous	IU	5033.01	pH – daily-minimum	5.0 s.u.	4.79	1
09/06/08 ①	continuous	IU	5033.01	pH – daily-minimum	5.0 s.u.	4.32	1
08/29/08	continuous	IU	5033.01	pH – daily-maximum	10.5 s.u.	11.63	1
08/28/08	continuous	IU	5033.01	pH – daily-maximum	10.5 s.u.	11.65	1
08/22/08	continuous	IU	5033.01	pH – daily-maximum	10.5 s.u.	10.64	1
08/17/08	continuous	IU	5033.01	pH – daily-maximum	10.5 s.u.	11.21	1
08/09/08	continuous	IU	5033.01	pH – daily-maximum	10.5 s.u.	10.53	1
08/07/08 ①	continuous	IU	5033.01	pH – daily-minimum	5.0 s.u.	2.58	1
08/02/08	continuous	IU	5033.01	pH – daily-maximum	10.5 s.u.	11.43	1
07/20/08	continuous	IU	5033.01	pH – daily-maximum	10.5 s.u.	10.76	1
07/16/08	continuous	IU	5033.01	pH – daily-maximum	10.5 s.u.	10.52	1
07/14/08 ①	continuous	IU	5033.01	pH – daily-minimum	5.0 s.u.	4.66	1
07/09/08	continuous	IU	5033.01	pH – daily-maximum	10.5 s.u.	10.91	1
07/05/08	continuous	IU	5033.01	pH – daily-maximum	10.5 s.u.	11.74	1
07/04/08	continuous	IU	5033.01	pH – daily-maximum	10.5 s.u.	11.24	1
05/27/08 ①	continuous	IU	5033.01	pH – daily-minimum	5.0 s.u.	4.92	1
05/24/08	continuous	IU	5033.01	pH – daily-maximum	10.5 s.u.	11.43	1
05/18/08	continuous	IU	5033.01	pH – daily-maximum	10.5 s.u.	10.8	1
05/17/08	continuous	IU	5033.01	pH – daily-maximum	10.5 s.u.	10.67	1
05/14/08 ①	continuous	IU	5033.01	pH – daily-minimum	5.0 s.u.	4.8	1
05/10/08 ①	continuous	IU	5033.01	pH – daily-minimum	5.0 s.u.	4.7	1
04/24/08 ①	continuous	IU	5033.01	pH – daily-minimum	5.0 s.u.	4.85	1
04/21/08 ①	continuous	IU	5033.01	pH – daily-minimum	5.0 s.u.	4.58	1
03/31/08 ①	continuous	IU	5033.01	pH – daily-minimum	5.0 s.u.	4.44	1
03/30/08	continuous	IU	5033.01	pH – daily-maximum	10.5 s.u.	12.22	1
03/23/08	continuous	IU	5033.01	pH – daily-maximum	10.5 s.u.	10.74	1
03/13/08 ①	continuous	IU	5033.01	pH – daily-minimum	5.0 s.u.	4.98	1
03/12/08 ①	continuous	IU	5033.01	pH – daily-minimum	5.0 s.u.	2.12	1
					Total Days of Violation		**112**

① The pH measurements below 5.0 s.u. also violate specific national prohibitions in 40 CFR 403.5(b)(2).
② Violations of the permit limit for flow rate are not listed in this table.

US EPA ARCHIVE DOCUMENT