P. O. Box 801357, Santa Clarita, CA 91380
Phone: 877.274.2422 (toll free)
Fax: 661.775.7628
www.CSIServices.biz

Report No.	1		
Page	1	Of	4
Date	11/5/2012	Monday	
CSI Job No.:	212115		

Daily Coating Inspection Report

Project: Red Hill Tank 5 Tank Clean, Inspect, Repair	Inspector: Frank Bringas
Client: Willbros	Contractor: Abhe and Svboda
Client Contact: Mr. Joe Gilbert	Foreman: Robert Webster

Surface Preparation

No.	Location of Work

Preparation Spec.	Preparation Actual	Initial Rust Grade A ☐ B ☐ C ☐ D ☒ Attribute	Sat	Unsat	N/A
☐ SP1	☐ SP1	Metal Porosity, Protrusion Free	☐	☐	☒
☐ SP2	☐ SP2	Grease and Oil Removal	☐	☐	☒
☐ SP3	☐ SP3	Recycled Abrasive Vial Test	☐	☐	☒
☐ SP7	☐ SP7	Visible Moisture on Surface	☐	☐	☒
☐ SP14	☐ SP14	Dust Removal	☐	☐	☒
☐ SP6	☐ SP6	Clean and Dry Abrasive	☐	☐	☒
☐ Other:			☐	☐	☒

Surface Profile Spec (mils)	Actual Avg (mils)	Actual Range (mils)
NA	NA	to

Soluble Salt Testing Location	(µS/cm²)	Prior to top	Sat	Unsat	N/A
n/a	n/a	n/a	☐	☐	☒

Comments Assumed duties as CSI QA/QC Inspector at Tank # 5 Red Hill.

A pre-blast inspection of the bottom dome in Tank # 5 showed extensive weld spatter that measured up to approximately 5/16" high and ¼" diameter. In addition, there are some areas along the welds where the weld spatter is over 1" away from the weld.
The welds, due to deterioration and other factors, have sharp irregular surfaces that protrude in several directions.

The extensive weld spatter and sharp edges on the welds could cause premature failure in the form of pinpoint corrosion.

The UFGS requires the application of one full coat of modified epoxy novolac polysulfide primer @ 12-15 mils, one stripe coat of epoxy novolac polysulfide and one full coat of modified epoxy novolac polysulfide @ 12-15 mils.

I am recommending the application of one additional stripe coat of to all welds and the weld spatter that are within the 1" area as per the stripe coat definition in SSPC PA-1.
I am further recommending that the weld spatter that is beyond 1" away from the weld, receive two brush coats on those areas.
All overcoat windows, between coats, shall be observed.

Frank R. Bringas	11/05/12	QC Report Review			Todd C. Tendler	11-07-2012
Inspector Signature	Date	Satisfactory ☒	Incomplete ☐	Corrected ☐	Reviewer Signature	Date

The information reported was obtained using visual observations and testing believed to be accurate. The information reported represents the data obtained from the specific representative areas inspected, tested, and/or verified.
© Copyright CSI Services 2004

P. O. Box 801357, Santa Clarita, CA 91380
Phone: 877.274.2422 (toll free)
Fax: 661.775.7628
www.CSIServices.biz

Report No.	1		
Page	2	Of	4
Date	11/5/2012	Monday	
CSI Job No.:	212115		

Project: Red Hill Tank 5 Tank Clean, Inspect, Repair | **Inspector: Frank Bringas**

Coating

☐ Resurfacer ☐ Sealant ☐ Paint ☐ Lining ☐ Caulking ☐ Other:

Manufacturer	Product Name	Thinner Name	Shelf Life (Mnth)	% Thinner Added Spec	% Thinner Added Actual	Coating Temp (F°)	Mixing Start	Mixing Stop	Induction Time	Pot Life	All Mixes Witnessed	
											☐ Yes	☐ No
											☐ Yes	☐ No
											☐ Yes	☐ No

Mixing

Mix No.	Product	Quantity	Component Batch Identification ☒ A	☐ B	☐ C	☐ A	☒ B	☐ C	☐ A	☐ B	☐ C	☐ A	☐ B	☐ C

Application

Color: | Application Start: | Application Stop:

No.	Location of Work	Equipment		Attribute	Sat	Unsat	N/A
		Brush	☐	Protective Coverings	☐	☐	☒
		Roller	☐	Surrounding Air Cleanliness	☐	☐	☒
		Conventional	☐	White Blotter Test (time):	☐	☐	☒
		Airless	☐	Intercoat Cleanliness	☐	☐	☒
		Plural Component	☐	Recoat Time Min/Max	☐	☐	☒
		HVLP	☐	Pot Agitation	☐	☐	☒
		Trowel	☐	Stripe coat	☐	☐	☒
		Flock	☐	Other:	☐	☐	☒
		Other:	☐	Wet Film Thickness (Mils)	☐	☐	☒
		Other:	☐	Spec: Actual:			

Comments: None.

The information reported was obtained using visual observations and testing believed to be accurate. The information reported represents the data obtained from the specific representative areas inspected, tested, and/or verified.
© Copyright CSI Services 2004

P. O. Box 801357, Santa Clarita, CA 91380
Phone: 877.274.2422 (toll free)
Fax: 661.775.7628
www.CSIServices.biz

Report No.	1		
Page	3	Of	4
Date	11/5/2012		Monday
CSI Job No.:	212115		

Project: Red Hill Tank 5 Tank Clean, Inspect, Repair	Inspector: Frank Bringas

Final Inspection ☐ Prime ☐ Intermediate ☐ Midcoat ☐ Top/Finish

No.	Location	Dry Film Thickness (mils)			Visual		Holiday Detection				Adhesion (ASTM D)	
		Spec	Actual				Voltage:				3359 / 6677 / 4541	
			Avg	Range	Sat	Unsat	N/A	Sat	Unsat	Remaining Holidays	PSI/ Rating	Cohesive/Adhesive
					☐	☐	☐	☐	☐			
					☐	☐	☐	☐	☐			
					☐	☐	☐	☐	☐			
					☐	☐	☐	☐	☐			
					☐	☐	☐	☐	☐			

Miscellaneous

Instruments		Visitors to the Site	
Type	Serial No.	Name	Company
Sling Psychrometer	K-44396		
Surface Temperature Gage			
Spring Micrometer			
Surface Comparator ☐ S, ☐ GS, ☐ SH			
Windometer			
Positector 6000	1308		
Calibration Plate	140404.26		
Holiday Detector ☒ M1, ☐ AP, ☐ AP/W	533267		
Moisture Meter			
Salt Contamination Kit			
Horiba Conductivity Meter	K-73025		
Other: Digital Psycrometer			

Comments:

The information reported was obtained using visual observations and testing believed to be accurate. The information reported represents the data obtained from the specific representative areas inspected, tested, and/or verified.
© Copyright CSI Services 2004

P. O. Box 801357, Santa Clarita, CA 91380
Phone: 877.274.2422 (toll free)
Fax: 661.775.7628
www.CSIServices.biz

Report No.			1
Page	4	Of	4
Date	11/5/12		Monday
CSI Job No.:			212115

Project: Red Hill Tank 5 Tank Clean, Inspect, Repair	Inspector: Frank Bringas

Photo Log

The information reported was obtained using visual observations and testing believed to be accurate. The information reported represents the data obtained from the specific representative areas inspected, tested, and/or verified.

© Copyright CSI Services 2004

P. O. Box 801357, Santa Clarita, CA 91380
Phone: 877.274.2422 (toll free)
Fax: 661.775.7628
www.CSIServices.biz

Report No.	2		
Page	1	Of	4
Date	11/6/2012	Tuesday	
CSI Job No.:	212115		

Daily Coating Inspection Report

Project: Red Hill Tank 5 Tank Clean, Inspect, Repair	Inspector: Frank Bringas
Client: Willbros	Contractor: Abhe and Svboda
Client Contact: Mr. Joe Gilbert	Foreman: Robert Webster

Surface Preparation

No.	Location of Work
1	Lower bowl

Preparation Spec.	Preparation Actual	Initial Rust Grade A ☐ B ☐ C ☐ D ☒ Attribute	Sat	Unsat	N/A
☒ SP1	☐ SP1	Metal Porosity, Protrusion Free	☐	☐	☒
☐ SP2	☐ SP2	Grease and Oil Removal	☒	☐	☐
☐ SP3	☐ SP3	Recycled Abrasive Vial Test	☐	☐	☒
☐ SP7	☐ SP7	Visible Moisture on Surface	☒	☐	☐
☐ SP14	☐ SP14	Dust Removal	☐	☐	☒
☐ SP6	☐ SP6	Clean and Dry Abrasive	☐	☐	☒
☐ Other:			☐	☐	☒

Surface Profile Spec (mils)	Actual Avg (mils)	Actual Range (mils)
NA	NA	to

Soluble Salt Testing Location	Specified (µg/cm)	Actual (µg/cm)	Sat	Unsat	N/A
See below	n/a	n/a	☐	☒	☐

Comments Assumed duties as CSI QC Inspector at Tank # 5 Red Hill. I accomplished the pre-blast inspections including the and degrease check throughout the lower bowl section of Tank 5 using the visual and clean white rag method. The checks were sat.
The contractor accomplished the soluble salt testing on various locations throughout the tank. No salts were detected on any surfaces with the exception of one test on the bottom flat part of the tank which measured 1 µg/cm. Upon further inspection of the lower flat part of the tank I noticed visible salts. Upon inquiry of why there would be salts in that area, I was told that a hydro test was conducted on a pipe using firemain (salt) water and some had leaked out due to improper purging of the line. The contamination appeared to be localized. The contractor cleaned the area with Chor-id but was not re-tested.
Due to safety concern with FLP any further surface preparation has been postponed.

Frank R. Bringas	11/06/12	QC Report Review			Todd C. Tuckler	11-08-2012
Inspector Signature	Date	Satisfactory ☒	Incomplete ☐	Corrected ☐	Reviewer Signature	Date

The information reported was obtained using visual observations and testing believed to be accurate. The information reported represents the data obtained from the specific representative areas inspected, tested, and/or verified.
© Copyright CSI Services 2004

P. O. Box 801357, Santa Clarita, CA 91380
Phone: 877.274.2422 (toll free)
Fax: 661.775.7628
www.CSIServices.biz

Report No.	2		
Page	2	Of	4
Date	11/6/2012		Tuesday
CSI Job No.:	212115		

Project: Red Hill Tank 5 Tank Clean, Inspect, Repair | **Inspector: Frank Bringas**

Coating ☐ Resurfacer ☐ Sealant ☐ Paint ☐ Lining ☐ Caulking ☐ Other:

Manufacturer	Product Name	Thinner Name	Shelf Life (Mnth)	% Thinner Added Spec	% Thinner Added Actual	Coating Temp (F°)	Mixing Start	Mixing Stop	Induction Time	Pot Life	All Mixes Witnessed	
											☐ Yes	☐ No
											☐ Yes	☐ No
											☐ Yes	☐ No

Mixing

Mix No.	Product	Quantity	Component Batch Identification ☐ A	☐ B	☐ C	☐ A	☐ B	☐ C	☐ A	☐ B	☐ C	☐ A	☐ B	☐ C

Application Color: | Application Start: | Application Stop:

No.	Location of Work	Equipment		Attribute	Sat	Unsat	N/A
		Brush	☐	Protective Coverings	☐	☐	☒
		Roller	☐	Surrounding Air Cleanliness	☐	☐	☒
		Conventional	☐	White Blotter Test (time):	☐	☐	☒
		Airless	☐	Intercoat Cleanliness	☐	☐	☒
		Plural Component	☐	Recoat Time Min/Max	☐	☐	☒
		HVLP	☐	Pot Agitation	☐	☐	☒
		Trowel	☐	Stripe coat	☐	☐	☒
		Flock	☐	Other:	☐	☐	☒
		Other:	☐	Wet Film Thickness (Mils)	☐	☐	☒
		Other:	☐	Spec: Actual:			

Comments: None.

The information reported was obtained using visual observations and testing believed to be accurate. The information reported represents the data obtained from the specific representative areas inspected, tested, and/or verified.
© Copyright CSI Services 2004

P. O. Box 801357, Santa Clarita, CA 91380
Phone: 877.274.2422 (toll free)
Fax: 661.775.7628
www.CSIServices.biz

Report No.	2		
Page	3	Of	4
Date	11/6/2012	Tuesday	
CSI Job No.:	212115		

Project: Red Hill Tank 5 Tank Clean, Inspect, Repair	Inspector: Frank Bringas

Final Inspection ☐ Prime ☐ Intermediate ☐ Midcoat ☐ Top/Finish

No.	Location	Dry Film Thickness (mils)			Visual		Holiday Detection				Adhesion (ASTM D)	
		Spec	Actual				Voltage:				3359 / 6677 / 4541	
			Avg	Range	Sat	Unsat	N/A	Sat	Unsat	Remaining Holidays	PSI/ Rating	Cohesive/Adhesive
					☐	☐	☐	☐	☐			
					☐	☐	☐	☐	☐			
					☐	☐	☐	☐	☐			
					☐	☐	☐	☐	☐			
					☐	☐	☐	☐	☐			

Miscellaneous

Instruments		Visitors to the Site	
Type	Serial No.	Name	Company
Sling Psychrometer	K-44396		
Surface Temperature Gage			
Spring Micrometer			
Surface Comparator ☐ S, ☐ GS, ☐ SH			
Windometer			
Positector 6000	1308		
Calibration Plate	140404.26		
Holiday Detector ☒ M1, ☐ AP, ☐ AP/W	533267		
Moisture Meter			
Salt Contamination Kit			
Horiba Conductivity Meter	K-73025		
Other: Digital Psycrometer			

Comments:

The information reported was obtained using visual observations and testing believed to be accurate. The information reported represents the data obtained from the specific representative areas inspected, tested, and/or verified.
© Copyright CSI Services 2004

P. O. Box 801357, Santa Clarita, CA 91380
Phone: 877.274.2422 (toll free)
Fax: 661.775.7628
www.CSIServices.biz

Report No.		2	
Page	4	Of	4
Date	11/6/12		Tuesday
CSI Job No.:		212115	

Project: Red Hill Tank 5 Tank Clean, Inspect, Repair	Inspector: Frank Bringas

Photo Log

Location of one salt test

Result of one salt test

Visible salt on flat bottom of tank

Visible salt on flat bottom of tank

The information reported was obtained using visual observations and testing believed to be accurate. The information reported represents the data obtained from the specific representative areas inspected, tested, and/or verified.
© Copyright CSI Services 2004

P. O. Box 801357, Santa Clarita, CA 91380
Phone: 877.274.2422 (toll free)
Fax: 661.775.7628
www.CSIServices.biz

Report No.	3		
Page	1	Of	4
Date	11/20/2012	Tuesday	
CSI Job No.:	212115		

Daily Coating Inspection Report

Project: Red Hill Tank 5 Tank Clean, Inspect, Repair	Inspector: Frank Bringas
Client: Willbros	Contractor: Abhe and Svboda
Client Contact: Mr. Joe Gilbert	Foreman: Robert Webster

Surface Preparation

No.	Location of Work
1	Lower bowl

Preparation Spec.	Preparation Actual	Initial Rust Grade A ☐ B ☐ C ☐ D ☒ Attribute	Sat	Unsat	N/A
☒ SP1	☐ SP1	Metal Porosity, Protrusion Free	☐	☐	☒
☐ SP2	☐ SP2	Grease and Oil Removal	☐	☒	☐
☐ SP3	☐ SP3	Recycled Abrasive Vial Test	☐	☐	☒
☐ SP7	☐ SP7	Visible Moisture on Surface	☐	☐	☒
☐ SP14	☐ SP14	Dust Removal	☐	☐	☒
☐ SP6	☐ SP6	Clean and Dry Abrasive	☐	☐	☒
☐ Other:			☐	☐	☒

Surface Profile Spec (mils)	Actual Avg (mils)	Actual Range (mils)
NA	NA	to

Soluble Salt Testing Location	Specified (µg/cm)	Actual (µg/cm)	Sat	Unsat	N/A
n/a	n/a	n/a	☐	☒	☐

Comments Assumed duties as CSI QA Inspector at Tank # 5 Red Hill. I accomplished the pre-blast inspections including the soluble salt test on the lower flat areas of bottom of the tank. The salt test was sat.

After the salt test was completed I noticed spot of grease on the third course. In addition there was grease under the newly installed 4" and ½" pipes. I told the contractor that those areas would require proper cleaning and re-inspection prior to the commencement of any surface preparation.

The contractor stated they would clean those areas and would be ready for inspection on 11/26/12.

Frank R. Bringas	11/20/12	QC Report Review			Todd C. Tendler	11-23-2012
Inspector Signature	Date	Satisfactory ☒	Incomplete ☐	Corrected ☐	Reviewer Signature	Date

The information reported was obtained using visual observations and testing believed to be accurate. The information reported represents the data obtained from the specific representative areas inspected, tested, and/or verified.
© Copyright CSI Services 2004

P. O. Box 801357, Santa Clarita, CA 91380
Phone: 877.274.2422 (toll free)
Fax: 661.775.7628
www.CSIServices.biz

Report No.	3		
Page	2	Of	4
Date	11/20/2012	Tuesday	
CSI Job No.:	212115		

Project: Red Hill Tank 5 Tank Clean, Inspect, Repair | **Inspector: Frank Bringas**

Coating ☐ Resurfacer ☐ Sealant ☐ Paint ☐ Lining ☐ Caulking ☐ Other:

Manufacturer	Product Name	Thinner Name	Shelf Life (Mnth)	% Thinner Added Spec	% Thinner Added Actual	Coating Temp (F°)	Mixing Start	Mixing Stop	Induction Time	Pot Life	All Mixes Witnessed	
											☐ Yes	☐ No
											☐ Yes	☐ No
											☐ Yes	☐ No

Mixing

Mix No.	Product	Quantity	Component Batch Identification ☐ A	☐ B	☐ C	☐ A	☐ B	☐ C	☐ A	☐ B	☐ C	☐ A	☐ B	☐ C

Application Color: | Application Start: | Application Stop:

No.	Location of Work	Equipment		Attribute	Sat	Unsat	N/A
		Brush	☐	Protective Coverings	☐	☐	☒
		Roller	☐	Surrounding Air Cleanliness	☐	☐	☒
		Conventional	☐	White Blotter Test (time):	☐	☐	☒
		Airless	☐	Intercoat Cleanliness	☐	☐	☒
		Plural Component	☐	Recoat Time Min/Max	☐	☐	☒
		HVLP	☐	Pot Agitation	☐	☐	☒
		Trowel	☐	Stripe coat	☐	☐	☒
		Flock	☐	Other:	☐	☐	☒
		Other:	☐	Wet Film Thickness (Mils)	☐	☐	☒
		Other:	☐	Spec: Actual:			

Comments: None.

The information reported was obtained using visual observations and testing believed to be accurate. The information reported represents the data obtained from the specific representative areas inspected, tested, and/or verified.
© Copyright CSI Services 2004

P. O. Box 801357, Santa Clarita, CA 91380
Phone: 877.274.2422 (toll free)
Fax: 661.775.7628
www.CSIServices.biz

Report No.	3		
Page	3	Of	4
Date	11/20/2012		Tuesday
CSI Job No.:	212115		

Project: Red Hill Tank 5 Tank Clean, Inspect, Repair	Inspector: Frank Bringas

Final Inspection ☐ Prime ☐ Intermediate ☐ Midcoat ☐ Top/Finish

No.	Location	Dry Film Thickness (mils)			Visual		Holiday Detection				Adhesion (ASTM D)	
		Spec	Actual				Voltage:				3359 / 6677 / 4541	
			Avg	Range	Sat	Unsat	N/A	Sat	Unsat	Remaining Holidays	PSI/ Rating	Cohesive/Adhesive
					☐	☐	☐	☐	☐			
					☐	☐	☐	☐	☐			
					☐	☐	☐	☐	☐			
					☐	☐	☐	☐	☐			
					☐	☐	☐	☐	☐			

Miscellaneous

Instruments		Visitors to the Site	
Type	Serial No.	Name	Company
Sling Psychrometer	K-44396		
Surface Temperature Gage			
Spring Micrometer			
Surface Comparator ☐ S, ☐ GS, ☐ SH			
Windometer			
Positector 6000	1308		
Calibration Plate	140404.26		
Holiday Detector ☒ M1, ☐ AP, ☐ AP/W	533267		
Moisture Meter			
Salt Contamination Kit			
Horiba Conductivity Meter	K-73025		
Other: Digital Psycrometer			

Comments:

The information reported was obtained using visual observations and testing believed to be accurate. The information reported represents the data obtained from the specific representative areas inspected, tested, and/or verified.
© Copyright CSI Services 2004

P. O. Box 801357, Santa Clarita, CA 91380
Phone: 877.274.2422 (toll free)
Fax: 661.775.7628
www.CSIServices.biz

Report No.			3
Page	4	Of	4
Date	11/20/12		Tuesday
CSI Job No.:			212115

Project: Red Hill Tank 5 Tank Clean, Inspect, Repair	Inspector: Frank Bringas

Photo Log

Location of one salt test

Grease spots on 3 course

Grease spots that are clearly visible
IR-1

Visible grease under newly installed ppg

The information reported was obtained using visual observations and testing believed to be accurate. The information reported represents the data obtained from the specific representative areas inspected, tested, and/or verified.
© Copyright CSI Services 2004

P. O. Box 801357, Santa Clarita, CA 91380
Phone: 877.274.2422 (toll free)
Fax: 661.775.7628
www.CSIServices.biz

Report No.	4		
Page	1	Of	4
Date	11/26/2012		Monday
CSI Job No.:	212115		

Daily Coating Inspection Report

Project: Red Hill Tank 5 Tank Clean, Inspect, Repair	Inspector: Frank Bringas
Client: Willbros	Contractor: Abhe and Svboda
Client Contact: Mr. Joe Gilbert	Foreman: Robert Webster

Surface Preparation

No.	Location of Work
1	Lower bowl

Preparation Spec.	Preparation Actual	Initial Rust Grade A ☐ B ☐ C ☐ D ☒ Attribute	Sat	Unsat	N/A
☒ SP1	☐ SP1	Metal Porosity, Protrusion Free	☐	☐	☒
☐ SP2	☐ SP2	Grease and Oil Removal	☐	☐	☒
☐ SP3	☐ SP3	Recycled Abrasive Vial Test	☐	☐	☒
☐ SP7	☐ SP7	Visible Moisture on Surface	☐	☐	☒
☐ SP14	☐ SP14	Dust Removal	☐	☐	☒
☐ SP6	☐ SP6	Clean and Dry Abrasive	☐	☐	☒
☐ Other:			☐	☐	☒

Surface Profile Spec (mils)	Actual Avg (mils)	Actual Range (mils)
NA	NA	to

Soluble Salt Testing Location	Specified (µg/cm)	Actual (µg/cm)	Sat	Unsat	N/A
n/a	n/a	n/a	☐	☒	☐

Comments Assumed duties as CSI QA Inspector at Tank # 5 Red Hill. I accomplished the pre-blast inspection for degreasing, that was noted during a pre-blast inspection on 11/20/12, prior to the start of removal of paint on the weld seams. During the inspection for de-greasing it was noted that the area under the 4" and ½" ppg and including the 4" pipe that there was grease that had not been cleaned. I told the Willbros site manager James Hagan and the sub-contractor PM that the areas need to cleaned and re-inspected prior to the start of sand blast paint removal. The sub-contractor PM stated that they were going to blast the bottom of the tank then work on the weld seams.

Frank R. Bringas	11/26/12	QC Report Review			Todd C. Tendler	11-28-2012
Inspector Signature	Date	Satisfactory ☒	Incomplete ☐	Corrected ☐	Reviewer Signature	Date

The information reported was obtained using visual observations and testing believed to be accurate. The information reported represents the data obtained from the specific representative areas inspected, tested, and/or verified.
© Copyright CSI Services 2004

P. O. Box 801357, Santa Clarita, CA 91380
Phone: 877.274.2422 (toll free)
Fax: 661.775.7628
www.CSIServices.biz

Report No.	4		
Page	2	Of	4
Date	11/26/2012		Monday
CSI Job No.:	212115		

Project: Red Hill Tank 5 Tank Clean, Inspect, Repair | **Inspector: Frank Bringas**

Coating ☐ Resurfacer ☐ Sealant ☐ Paint ☐ Lining ☐ Caulking ☐ Other:

Manufacturer	Product Name	Thinner Name	Shelf Life (Mnth)	% Thinner Added Spec	% Thinner Added Actual	Coating Temp (F°)	Mixing Start	Mixing Stop	Induction Time	Pot Life	All Mixes Witnessed	
											☐ Yes	☐ No
											☐ Yes	☐ No
											☐ Yes	☐ No

Mixing

Mix No.	Product	Quantity	Component Batch Identification ☐ A	☐ B	☐ C	☐ A	☐ B	☐ C	☐ A	☐ B	☐ C	☐ A	☐ B	☐ C

Application Color: | Application Start: | Application Stop:

No.	Location of Work	Equipment		Attribute	Sat	Unsat	N/A
		Brush	☐	Protective Coverings	☐	☐	☒
		Roller	☐	Surrounding Air Cleanliness	☐	☐	☒
		Conventional	☐	White Blotter Test (time):	☐	☐	☒
		Airless	☐	Intercoat Cleanliness	☐	☐	☒
		Plural Component	☐	Recoat Time Min/Max	☐	☐	☒
		HVLP	☐	Pot Agitation	☐	☐	☒
		Trowel	☐	Stripe coat	☐	☐	☒
		Flock	☐	Other:	☐	☐	☒
		Other:	☐	Wet Film Thickness (Mils)	☐	☐	☒
		Other:	☐	Spec: Actual:			

Comments: None.

The information reported was obtained using visual observations and testing believed to be accurate. The information reported represents the data obtained from the specific representative areas inspected, tested, and/or verified.
© Copyright CSI Services 2004

P. O. Box 801357, Santa Clarita, CA 91380
Phone: 877.274.2422 (toll free)
Fax: 661.775.7628
www.CSIServices.biz

Report No.	4		
Page	3	Of	4
Date	11/26/2012	Monday	
CSI Job No.:	212115		

Project: Red Hill Tank 5 Tank Clean, Inspect, Repair	Inspector: Frank Bringas

Final Inspection ☐ Prime ☐ Intermediate ☐ Midcoat ☐ Top/Finish

No.	Location	Dry Film Thickness (mils)			Visual		Holiday Detection				Adhesion (ASTM D)	
		Spec	Actual				Voltage:				3359 6677 4541	
			Avg	Range	Sat	Unsat	N/A	Sat	Unsat	Remaining Holidays	PSI/ Rating	Cohesive/Adhesive
					☐	☐	☐	☐	☐			
					☐	☐	☐	☐	☐			
					☐	☐	☐	☐	☐			
					☐	☐	☐	☐	☐			
					☐	☐	☐	☐	☐			

Miscellaneous

Instruments		Visitors to the Site	
Type	Serial No.	Name	Company
Sling Psychrometer	K-44396		
Surface Temperature Gage			
Spring Micrometer			
Surface Comparator ☐ S, ☐ GS, ☐ SH			
Windometer			
Positector 6000	1308		
Calibration Plate	140404.26		
Holiday Detector ☒ M1, ☐ AP, ☐ AP/W	533267		
Moisture Meter			
Salt Contamination Kit			
Horiba Conductivity Meter	K-73025		
Other: Digital Psycrometer			

Comments:

The information reported was obtained using visual observations and testing believed to be accurate. The information reported represents the data obtained from the specific representative areas inspected, tested, and/or verified.
© Copyright CSI Services 2004

P. O. Box 801357, Santa Clarita, CA 91380
Phone: 877.274.2422 (toll free)
Fax: 661.775.7628
www.CSIServices.biz

Report No.			4
Page	4	Of	4
Date	11/26/12		Monday
CSI Job No.:			212115

Project: Red Hill Tank 5 Tank Clean, Inspect, Repair	Inspector: Frank Bringas

Photo Log

Cleaned and degreased areas

Cleaned and degreased areas

Cleaned and degreased areas

IR-1

The information reported was obtained using visual observations and testing believed to be accurate. The information reported represents the data obtained from the specific representative areas inspected, tested, and/or verified.
© Copyright CSI Services 2004

P. O. Box 801357, Santa Clarita, CA 91380
Phone: 877.274.2422 (toll free)
Fax: 661.775.7628
www.CSIServices.biz

Report No.	5		
Page	1	Of	6
Date	12/10/2012	Monday	
CSI Job No.:	212115		

Daily Coating Inspection Report

Project: Red Hill Tank 5 Tank Clean, Inspect, Repair	Inspector: Frank Bringas
Client: Willbros	Contractor: Abhe and Svboda
Client Contact: Mr. Joe Gilbert	Foreman: Robert Webster

Surface Preparation

No.	Location of Work

Preparation Spec.	Preparation Actual	Initial Rust Grade	A ☐	B ☐	C ☒	D ☐
		Attribute		Sat	Unsat	N/A
☐ SP1	☐ SP1	Metal Porosity, Protrusion Free		☐	☐	☒
☐ SP2	☐ SP2	Grease and Oil Removal		☐	☐	☒
☐ SP3	☐ SP3	Recycled Abrasive Vial Test		☐	☐	☒
☐ SP7	☐ SP7	Visible Moisture on Surface		☐	☐	☒
☐ SP14	☐ SP14	Dust Removal		☐	☐	☒
☐ SP6	☐ SP6	Clean and Dry Abrasive		☐	☐	☒
☐ Other:				☐	☐	☒

Surface Profile			Soluble Salt Testing					
Spec (mils)	Actual Avg (mils)	Actual Range (mils)	Location	Specified (µg/cm)	Actual (µg/cm)	Sat	Unsat	N/A
NA	NA	to	n/a	n/a	n/a	☐	☒	☐

Comments Assumed duties as CSI QA Inspector at Tank # 5 Red Hill. The contractor sand blasted the retained coating on the welds in way of the lower bowl liner plates of tank 5. The areas included 3 feet up on course 4 from the lower dome/barrel interface and down to the floor plated including courses 1-3. This was accomplished to allow the contractor to identify and grind the excessive and large weld spatter.
I was asked by Willbros to ascertain the extent of the weld spatter on the exposed welds.
Using the basket, I dropped down to course 3/4 and went from plate 66 to plate 34 of quadrants D and C, dropped down to the 2nd course from plate 34 to plate to plate 66, dropped down to course 1 and inspected course 1 from plate 1-44.
After the 1st course was inspected, using the basket went up to course 2 from plate 33 to plate 1 then up to course 3/4 from plate 1 to plate 33.
All vertical and horizontal welds were looked at. It must be noted that several 4"X4" plate were welded along the horizontal welds. These plates had weld spatter also.
There are approximately 444 lengths of welds. All lengths of welds had weld spatter that require removal. 335 lengths of weld has weld spatter on approximately 75-100% (moderate to extensive) of the individual length on both sides of the weld. 109 lengths of weld had less than 50% weld spatter on both sides of the weld.
Photos were taken of the weld spatter representative of moderate to extensive weld spatter along 100% of the length of weld, photos of the length of weld with 50% or less weld spatter and the welded plates and length of welds that the contractor had already grinded. These areas that were grinded include lengths of weld that had 100% grinding on each side of the weld and lengths of weld that had less weld spatter.

Frank R. Bringas	12/10/12	QC Report Review			Todd C. Tendler	12-12-2012
Inspector Signature	Date	Satisfactory ☒	Incomplete ☐	Corrected ☐	Reviewer Signature	Date

The information reported was obtained using visual observations and testing believed to be accurate. The information reported represents the data obtained from the specific representative areas inspected, tested, and/or verified.
© Copyright CSI Services 2004

P. O. Box 801357, Santa Clarita, CA 91380
Phone: 877.274.2422 (toll free)
Fax: 661.775.7628
www.CSIServices.biz

Report No.	5		
Page	2	Of	6
Date	12/10/2012		Monday
CSI Job No.:	212115		

Project: Red Hill Tank 5 Tank Clean, Inspect, Repair | **Inspector: Frank Bringas**

Coating ☐ Resurfacer ☐ Sealant ☐ Paint ☐ Lining ☐ Caulking ☐ Other:

Manufacturer	Product Name	Thinner Name	Shelf Life (Mnth)	% Thinner Added		Coating Temp (F°)	Mixing		Induction Time	Pot Life	All Mixes Witnessed	
				Spec	Actual		Start	Stop				
											☐ Yes	☐ No
											☐ Yes	☐ No
											☐ Yes	☐ No

Mixing

Mix No.	Product	Quantity	Component Batch Identification											
			☐ A	☐ B	☐ C	☐ A	☐ B	☐ C	☐ A	☐ B	☐ C	☐ A	☐ B	☐ C

Application Color: | Application Start: | Application Stop:

No.	Location of Work	Equipment		Attribute		Sat	Unsat	N/A
		Brush	☐	Protective Coverings		☐	☐	☒
		Roller	☐	Surrounding Air Cleanliness		☐	☐	☒
		Conventional	☐	White Blotter Test (time):		☐	☐	☒
		Airless	☐	Intercoat Cleanliness		☐	☐	☒
		Plural Component	☐	Recoat Time Min/Max		☐	☐	☒
		HVLP	☐	Pot Agitation		☐	☐	☒
		Trowel	☐	Stripe coat		☐	☐	☒
		Flock	☐	Other:		☐	☐	☒
		Other:	☐	Wet Film Thickness (Mils)		☐	☐	☒
		Other:	☐	Spec:	Actual:			

Comments: None.

The information reported was obtained using visual observations and testing believed to be accurate. The information reported represents the data obtained from the specific representative areas inspected, tested, and/or verified.
© Copyright CSI Services 2004

P. O. Box 801357, Santa Clarita, CA 91380
Phone: 877.274.2422 (toll free)
Fax: 661.775.7628
www.CSIServices.biz

Report No.	5		
Page	3	Of	6
Date	12/10/2012	Monday	
CSI Job No.:	212115		

Project: Red Hill Tank 5 Tank Clean, Inspect, Repair	Inspector: Frank Bringas

Final Inspection ☐ Prime ☐ Intermediate ☐ Midcoat ☐ Top/Finish

No.	Location	Dry Film Thickness (mils)			Visual		Holiday Detection				Adhesion (ASTM D)	
		Spec	Actual				Voltage:				3359 / 6677 / 4541	
			Avg	Range	Sat	Unsat	N/A	Sat	Unsat	Remaining Holidays	PSI/ Rating	Cohesive/Adhesive
					☐	☐	☐	☐	☐			
					☐	☐	☐	☐	☐			
					☐	☐	☐	☐	☐			
					☐	☐	☐	☐	☐			
					☐	☐	☐	☐	☐			

Miscellaneous

Instruments		Visitors to the Site	
Type	Serial No.	Name	Company
Sling Psychrometer	K-44396		
Surface Temperature Gage			
Spring Micrometer			
Surface Comparator ☐ S, ☐ GS, ☐ SH			
Windometer			
Positector 6000	1308		
Calibration Plate	140404.26		
Holiday Detector ☒ M1, ☐ AP, ☐ AP/W	533267		
Moisture Meter			
Salt Contamination Kit			
Horiba Conductivity Meter	K-73025		
Other: Digital Psycrometer			

Comments:

The information reported was obtained using visual observations and testing believed to be accurate. The information reported represents the data obtained from the specific representative areas inspected, tested, and/or verified.
© Copyright CSI Services 2004

P. O. Box 801357, Santa Clarita, CA 91380
Phone: 877.274.2422 (toll free)
Fax: 661.775.7628
www.CSIServices.biz

Report No.		5	
Page	4	Of	6
Date	12/10/12		Monday
CSI Job No.:		212115	

Project: Red Hill Tank 5 Tank Clean, Inspect, Repair	Inspector: Frank Bringas

Photo Log

Length of weld with extensive weld spatter

Length of weld with less extensive weld spatter

Length of weld with moderate to extensive weld spatter

Length of weld with less extensive weld spatter

The information reported was obtained using visual observations and testing believed to be accurate. The information reported represents the data obtained from the specific representative areas inspected, tested, and/or verified.
© Copyright CSI Services 2004

P. O. Box 801357, Santa Clarita, CA 91380
Phone: 877.274.2422 (toll free)
Fax: 661.775.7628
www.CSIServices.biz

Report No.		5	
Page	5	Of	6
Date	12/10/12		Monday
CSI Job No.:		212115	

Project: Red Hill Tank 5 Tank Clean, Inspect, Repair	Inspector: Frank Bringas

Photo Log

Length of horizontal weld with extensive weld spatter

4″X4″ welded plate with extensive weld spatter

Overview of welded 4″X4″ welded plate on lower course

Length of weld with less extensive weld spatter

IR-1

The information reported was obtained using visual observations and testing believed to be accurate. The information reported represents the data obtained from the specific representative areas inspected, tested, and/or verified.

© Copyright CSI Services 2004

P. O. Box 801357, Santa Clarita, CA 91380
Phone: 877.274.2422 (toll free)
Fax: 661.775.7628
www.CSIServices.biz

Report No.			5
Page	6	Of	6
Date	12/10/12		Monday
CSI Job No.:			212115

Project: Red Hill Tank 5 Tank Clean, Inspect, Repair	Inspector: Frank Bringas

Photo Log

Welds and 4"X4" plate that had the weld spatter grinded off

Length of weld with less extensive weld spatter that had been grinded

Length of weld with moderate to extensive weld spatter that had been grinded by the contractor

Length of weld with extensive weld spatter

The information reported was obtained using visual observations and testing believed to be accurate. The information reported represents the data obtained from the specific representative areas inspected, tested, and/or verified.
© Copyright CSI Services 2004

TRANSMITTAL OF SHOP DRAWINGS, EQUIPMENT DATA, MATERIAL SAMPLES, OR MANUFACTURER'S CERTIFICATES OF COMPLIANCE *(Read instructions on the reverse side prior to initiating this form)*	DATE 9/27/2012	TRANSMITTAL NO. 3

SECTION I - REQUEST FOR APPROVAL OF THE FOLLOWING ITEMS *(This section will be initiated by the contractor)*

TO:	FROM:	CONTRACT NO.	CHECK ONE:
Mr. Joe Gilbert Willbros. Government Services, LLC 2087 East 71st Street, Tulsa, OK 74136	Abhe & Svoboda, Inc. 91-161 Olai Street Kapolei, HI 96707	N62583-09-d-0132	☑ THIS IS A NEW TRANSMITTAL ☐ THIS IS A RESUBMITTAL OF TRANSMITTAL _____
SPECIFICATION SEC. NO. *(Cover only one section with each transmittal)*	PROJECT TITLE AND LOCATION Redhill Tank No. 5, FISC, Pearl Harbor, HI		CHECK ONE: THIS TRANSMITTAL IS FOR ☐ FIO ☑ GOV'T. APPROVAL

ITEM NO. *a.*	DESCRIPTION OF ITEM SUBMITTED *(Type size, model number/etc.)* *b.*	MFG OR CONTR. CAT., CURVE DRAWING OR BROCHURE NO. *(See instruction no. 8)* *c.*	NO. OF COPIES *d.*	CONTRACT REFERENCE DOCUMENT: SPEC. PARA. NO. *e.*	CONTRACT REFERENCE DOCUMENT: DRAWING SHEET NO. *f.*	FOR CONTRACTOR USE CODE *g.*	VARIATION *(See instruction No. 6)* *h.*	FOR CE USE CODE *i.*
a	Surface Preparation Work Plan	Work Plan	1			A		
b	Coatings Application Work Plan	Work Plan	1			A		

REMARKS

I certify that the above submitted items have been reviewed in detail and are correct and in strict conformance with the contract drawings and specifications except as other wise stated.

- Nick Schmid, Area Manger

NAME AND SIGNATURE OF CONTRACTOR

SECTION II - APPROVAL ACTION

ENCLOSURES RETURNED *(List by Item No.)*	NAME, TITLE AND SIGNATURE OF APPROVING AUTHORITY	DATE

WORK PLAN -A

SURFACE PREPARATIONS

REDHILL TANK NO. 5 COATING

COATING OF UNDERGROUND STORAGE TANK

OHAU

Purchase Order No. 54118-042-00

UFGS Specification 09 97 13.15

LOW VOC POLYSULFIDE INTERIOR COATING OF
WELDED STEEL PETROLEUM FUEL TANKS

Date: June 22, 2012

ASI Job No.

Purpose and Intent

The Purpose and Intent of this Work Plan A is to set forth the processes and procedures to be implemented for surface preparation of the interior of Tank no.5, in order to the meet the specific requirements of UFGS Specifications 09 97 13.15(Low VOC Polysulfide Interior Coating of Welded Steel Petroleum Fuel Tanks). This Work Plan outlines the procedures for Safety, Environmental Control, and Quality Control as they apply to the Surface Preparation requirements. This Work Plan describes the phases of coating operations, addresses the sequence of work, and identifies the inspection and testing requirements, procedures and processes that are required to achieve the necessary quality requirements for the project. Requests for changes, modifications or revisions to this Work Plan will be submitted in writing for approval. Modifications to the plan must be approved prior to the respective work commencing. Changes, modifications or clarifications to this Work Plan will be forwarded to Nick Schmid for approval and submittal to the Contracting Officer as required. This Work Plan will be reviewed continuously and revised for increased effectiveness. Specified reference manuals or standards will be available onsite for reference.

TABLE OF CONTENTS WORK PLAN-A

General Notes

1. Project Resources
2. Site Safety Hazard Analysis
3. Work Scheduling and Progress Reports
4. Pre-Surface Preparation Meeting
5. Hold Point Inspections Summary (Surface Preparation)
6. Environmental Control Systems
7. Receipt and Storage of Materials
8. Pre-Surface Preparation Testing and Inspection
9. Surface Preparation
10. Surface Preparation Testing and Inspection
11. Testing Prior to Primer Coat
12. Surface Preparation of Coated Surfaces

GENERAL NOTES

1. Abrasive Media that does not conform to the Mil Spec requirements will be marked Do Not Use and isolated from the storage area. If non-conforming abrasive happens to be used, those areas will be re-blasted with conforming abrasive. The areas of the tank blasted will be defined by part of the tank (Roof, Shell or Floor) that is being blasted. Each new lot of abrasive will be listed on the QC report to the defined area(s) the lot was used.

2. ASI intends to observe the lighting requirements outlined in SSPC Guide NO.12 and defined uses in permit and non permit confined space set up locations in accordance with OSHA 1910. An EasyView™ Light Meter or GE Pocket Light Meter Model 217 or equivalent will be used to measure the foot candles of light around the work areas. The results will be documented on the QC Reports.

3. Changes, modifications or clarifications to this Work plan will be made in writing and forwarded for Approval and submittal to the Contracting Officer as required.

1.0 PROJECT RESOURCES:

1.1 Equipment Resources

1.1.1 Explosion Proof Exhaust Ventilation Fans 4,000 – 10,000 cfm variable (if required)
1.1.2 Dust Collection Equipment (3) 5,000 cfm Dust Units
1.1.3 Interior Tank Scaffolding (booms provided by WGS)
1.1.4 Explosion Proof Lights: General Work Area – 10 foot candles, Surface Prep and Coating Areas- 20 foot candles, Inspection and Test Locations – 50 foot candles
1.1.5 Air Compressor Ingersol Rand (1,170 cfm) w/ Desiccant Air Dryer
1.1.6 Abrasive Blast Pots (3) 600 lbs Pots
1.1.7 Electric Powered Industrial Vacuum
1.1.8 Pressure washers (if needed)
1.1.9 1 ½" Blast Hose with Blast Hose whips and nozzles
1.1.10 Dehumidification equipment (DH Tech DH6500)
1.1.11 Related Quality Control Inspection Equipment
1.1.12 DH Tech- Air Patrol® automated monitoring system or equivalent

1.2 Materials
1.2.1 Abrasive
1.2.1.1 Kleenblast® Abrasive-30/60 mesh.

1.3 Manpower:
- 1.3.1 QCM
- 1.3.2 Project Superintendent
- 1.3.3 Painter(s)
- 1.3.4 Laborer(s)

2.0 SITE SAFETY HAZARD ANALYSIS

A Site Specific Safety Hazard Analysis will be conducted by a Competent Individual, to assess and identify potential and actual physical and mechanical hazards that may or have the potential to cause injury or create or promote adverse health effects. The Hazard Analysis and Hazard Control Measures will be conducted in accordance with Title 29 Code of Federal Regulations 1926.20 "Employer Responsibilities" to include regular and frequent safety inspections. Employee Training will be conducted in accordance with the hazard analysis requirements and documented in accordance with Title 29 CFR 1926.21 to include applicable training requirements prescribed in Performance Based Standards to include EM-385-1-1 and SSPC Guide NO.12 Guide for Illumination of Industrial Painting Projects.
A Safety Management System has been developed to outline the Responsibilities and Authority of Key Personnel involved in Safety Performance and Regulatory Compliance. A copy of the Site Safety Hazard Analysis and Control Measures will be incorporated into the Safety Management System upon the initial site safety inspection.

3.0 WORK SCHEDULING AND PROGRESS REPORTS

Scheduling
The QCM will keep ASI updated with the Progress Schedule that will be developed to detail phases of work, and inspection processes for the scope of services. The Progress Schedule will be communicated to involved parties for scheduling surface preparation activities, inspections and testing processes. The Schedule will be revised as applicable based on actual production, unpredicted inclement weather, and delays created by other parties. The Inspector and ASI Superintendent will make a diligent effort to maintain good communications so that inspections and testing will be performed in a timely manner with the scheduled work processes. Inclement Weather Considerations Local forecast will be utilized to coordinate work activities, to monitor weather changes, particularly if there is a sharp increase in relative humidity and elevated dew points. These will be evaluated on a case by case event in order to predict and assess adverse impacts created by atmospheric conditions. The Inspector and ASI Superintendent will work closely together to ensure weather conditions are interpreted correctly to the Contracting Officer's representative.

4.0 PRE-APPLICATION MEETING

Prior to surface preparation or coating operations, a Pre-Application Meeting will be conducted in accordance with specification section 09 97 13.15, paragraph 1.4.8, with all involved parties to include but may not be limited to:

• Abhe & Svoboda, Inc. Representatives
• Willbros. Government Services Representatives
• NAVY Representatives

Items to be discussed include the following

• Specification Section 09 97 13.15 Surface Preparation Requirements
• Corrective action requirement and procedures
• Review of Work Plan A
• Safety Plan
• Coordination with other sections
• Inspection standards
• Inspection requirements and procedures
• Test Procedures
• Environmental Control Systems
• Test Logs
• Recordkeeping and Reporting

A Daily Planning Meeting will be conducted each morning or as needed or deemed necessary to discuss the scheduled activities. The meeting will be attended by the Inspector and ASI Superintendent. Items will be discussed pertaining to work locations, processes, required testing and inspections. Deviations from the Work Plan or Contract Requirements will require Contracting Officer's approval and a Work Plan revision.

5.0 HOLD POINT INSPECTIONS

Hold Point Inspections will occur throughout the project during specific periods as detailed within Section 09 97 13.15. A Hold Point Inspection can consist of visual inspections and or testing to acquire data results to establish the steps and actions for scheduled surface cleaning processes. The Inspector and ASI Superintendent will conduct inspections and tests at regular intervals and document the findings per requirements. The inspection data results will be forwarded to the QCM for compliance verification signature, and submission to Navy. Calibration documentation for all instruments will be submitted as required. The accuracy of thickness gages will be verified daily and noted on the Quality Control Inspection Report.

Hold Point Inspections (Surface Preparation)

Step	Action
1) Prior to Production	✓ Safety
2) Environmental Conditions Maintain conditions through out the surface preparation and prime coat application to prevent the development of corrosion on blast cleaned surfaces. Continuous monitoring will be performed	✓ Temperature ✓ Humidity ✓ Dew Point ✓ Surface Temperature
3) Abrasive Material Conformance	✓ Verify material meets MIL-A-22262
4) Tank Cleaning 4.a) Initial Blast Cleaning in bowl of tank (test blasting) per 09 97 13.5 – paragraph 3.9.5	✓ Verify work completed ✓ Visual inspection of substrate for profile in excess of 3 mils
5) Pre-Preparation Testing for Surface Contaminants	✓ Presence of Oil or Grease ✓ Surface Soluble Salts Testing ✓ Visual Inspections
6) Abrasive Blast Cleaning	✓ Air Pressure
7) Abrasive Blast Cleanliness	✓ SSPC-SP 10 Cleanliness ✓ Substrate Profile
8) Pre-Application Testing for Surface Contaminants	✓ Presence of Oil or Grease ✓ Surface Soluble Salts Testing ✓ Visual Inspections
9) Pre-Application Testing for Surface Cleanliness	✓ Tape Test

6.0 ENVIRONMENTAL CONTROL SYSTEMS

Interior of Tank

An Environmental Control System (ECS) has been designed to control environmental and atmospheric conditions inside tank. This system consists of a Dehumidification System and Exhaust Ventilation and will be put into service to control the atmospheric conditions during blasting and coating operations. The design plan will detail the systems to be employed for the length of this project. The system will provide ventilation and maintain appropriate humidity and temperature conditions inside the workspace so as to prevent degradation of the prepared steel prior to the application of the specified primer coat. The Dehumidification System and Exhaust Ventilation will provide dilution air for control of vapors in the tank to maintain a safe environment for workers. It must be noted that during application of the coating systems a short duration of elevated humidity may be experienced due to exhausting of the paint vapors. This is a normal function of the system and will not interfere with the work processes or reduce the quality of work in any way.

Environmental Conditions

The efficiency of the Environmental Control System will be evaluated each and every day throughout the surface preparation, coating application and curing phases. The Inspector will measure environmental and ambient conditions throughout the work shifts with the following, but not limited to, equipment: Positector DPM or Sling Psychrometers and Dual Magnetic Surface Thermometers. Dew Point Depression will be calculated from the US Weather Bureau Psychrometric Tables and atmospheric Dew Points compared to the coolest surface temperature will be measured with a calibrated electronic dew point meter that will measure readings directly at the surface. The

instrument must be traceable to NIST. Production activities will only be permitted when the Inspector has measured the environmental conditions to determine the listed requirements in compliance.

7.0 RECEIPT AND STORAGE OF MATERIALS

- ✓ INSPECTION REQUIRED
  - Abrasive material Conformance
  - Abrasive Media Storage

Abrasive Material Conformance
Abrasive media currently on site and media delivered prior to or during surface preparation operations will be inspected to verify conformance with Specification Requirements of MIL-A-22262. The abrasive media manufacturer, will be chosen from the current Qualified Products Database for MIL-A-22262B(2). This certification will be submitted, in the submittal process, that the abrasive meets the Non-metallic Abrasive specification MIL-A-22262. Surface Preparation operations will not be permitted to begin until the abrasive has been approved for use. The Inspector and ASI Superintendent will keep a current inventory record of all approved media. Components not meeting the Specification Requirements will be conspicuously marked and removed from the site.

Abrasive onsite Sampling and Testing Plan

1. QCM 3 day notification of abrasive sampling to COR
2. ASI will obtain a sampling kit (e.g. zip lock plastic bag) and mark/label appropriately (e.g. product, spec number, lot number, contract number, date, intended use, quantity).
3. ASI will make shipping arrangements to ADA Technologies Lab.
4. QCM to inspect sampling.
5. ASI to take samples per techniques and frequency of MIL-A-22262 and put in shipping container ready to be expedited shipping.
6. QCM to ship/mail out sample with Chain of Custody form or arrange for pickup.
7. ADA Technologies to test per Mil Spec Standards and issue test report back immediately.
8. Repeat steps above until find acceptable lot
9. Reblast areas that failed (if applicable).

Abrasive Media Storage
Abrasive media at the jobsite will be stored in a trailer which will keep it dry and out of the elements.

8.0 PRE-SURFACE PREPARATION TESTING AND INSPECTION

- ✓ INSPECTION REQUIRED:
  - Steel Defects
  - Soluble Salts Tests (Chloride, Sulfate, Nitrate Ions)

- Oil and Grease Tests
- Air cleanliness test

Substrate Condition
The substrate will be assessed and inspected for existing conditions by the Inspector to determine the existing conditions of Tank. The visual condition of the substrate will be detailed and documented in the Daily Quality Control Report and the Daily Inspection Checklist. This inspection will be conducted prior to surface preparation for prior to the start of blast cleaning operations. Surface defects such as detailed within SSPC PA-1 will be inspected and properly identified.

Steel Defects
Steel defects such as fins, burs, erection marks, welds, and weld spatter will be addressed by the onsite Inspector. The Inspector will forward the report of conditions to the QCM. Repairs may be performed, as deemed necessary, by others or ASI for steel defects noted.

Soluble Salts Test
At randomly selected locations, soluble salts testing will be conducted at a rate of three (3) tests for the first 1000 ft² and one (1) test for every 2000 ft² thereof. Concentrate testing of bare steel at area of corrosion pitting. Approximately 30% of the tests on bare steel will be performed at welds, divided equally between horizontal and vertical welds. The concentration of soluble salts will be measured and utilized to dictate the necessity of chloride, sulfate, or nitrate ion removal.

For the Interior of the tank, One (1) or more readings greater than Non-detectable for chlorides, sulfates, or nitrates will trigger the need for the removal of soluble salts.

The Inspector will conduct the Soluble Salt Testing as prescribed above utilizing a Chlor*Test "CSN" kit as manufactured by Chlor*Rid International or equal (such as the ARP Soluble Salts Meter Model Number RPCT-07-001) after the tank cleaning prior to blast cleaning and between coating applications. Retain and label test tubes for verification and documentation.

Soluble Salts Removal
Surfaces that are found to be non-compliant shall be pressured washed with potable water only or potable water modified with a soluble salts remover solution, such as Chlor*Rid or equal and retested. This procedure will be performed until the tests show allowable results.

Oil and Grease Test
A Water Mist (Water Break) Test will be utilized to detect the presence of oil or grease on the steel substrate prior to and after surface preparation activities, and between coating applications. A good Visual Inspection, and if deemed necessary a Cloth Rub Test will accompany the Water Break Test to ensure the quality requirements are maintained by the Inspector. Areas exhibiting the presence of oil or grease will be marked for correction prior to allowing further activities. Solvent cleaning in accordance with SSPC SP-1 will be utilized to remove the presence of oil or grease if found. The solvent

cleaning will be continued until results show no detectable presence of oil or grease. Care will be afforded to prevent further contamination by workers and inspection personnel.

Air Cleanliness Test

The compressed air supply used for the abrasive blast cleaning operation will be inspected for cleanliness in accordance with ASTM D 4285. The abrasive blast cleaning air supply will be tested 24 inches from the supply air as close to work area as possible with the abrasive shut off and directed to blotter paper for 60 seconds. The blotter paper will be inspected for the presence of oil, fluids, water or other deleterious materials. The Air Cleanliness Test will be conducted prior to abrasive blast cleaning and every five hours thereafter during continuous blast cleaning activities. The presence of oil, fluids, water or other deleterious materials on the blotter paper are not acceptable and require corrective actions to include equipment maintenance or reconfiguration of the air supply system and resources.

9.0 SURFACE PREPARATION

Tank interior substrates and components scheduled for coating will be abrasive blast cleaned to an SSPC SP-10, Near White Metal Abrasive Blast Cleaning. ASI will use conventional abrasive air blast cleaning methods using non-metallic 30/60 mesh coal slag abrasives for the cleaning operations. ASI intends to use three (3) abrasive blast cleaning operators with a minimum nozzle pressure to achieve the desired surface profile of 2 to 3 mils. The working pressure at the nozzle should be maintained near 100 psi to achieve satisfactory profile results.

10.0 SURFACE PREPARATION TESTING AND INSPECTION

- ✓ INSPECTION REQUIRED
  - Substrate Cleanliness
  - Substrate Profile

Substrate Cleanliness

Substrates to receive abrasive blast cleaning will be inspected for substrate cleanliness periodically throughout the workday and at the end of each shift. The Inspector will inspect the abrasive blast cleaned substrate to ensure that an SSPC SP-10 Near-White Metal Abrasive Blast is achieved prior to the application of the prime coat. Surface preparation testing and initial inspection will be conducted at the completion of the workday and initial blow down to ensure the blast cleaning process is in conformance with the specification requirements.

Substrate Profile

Surface profile measurements will be conducted daily by the Inspector per ASTM D 7127 to ensure compliance with the Specifications during the abrasive cleaning process. The minimum and maximum surface profile depth of 2 to 3 mils will be measured in

accordance with ASTM D 7127 using Rmax as the measure of profile height at a rate of three (3) tests for the first 1000 ft² plus one (1) test for each additional 1000 ft² or part thereof. If approved as an alternate, the surface profile will be measured utilizing Testex Tape (X-Course) and utilizing a spring micrometer in accordance with Method C of ASTM D 4417. The test tape will be attached to Daily Inspection Reports. If the existing profile exceeds the maximum allowable profile, an existing profile evaluation will be performed to determine how to proceed with the work. If the profile, after blasting, is less than the minimum required, the area will be re-blasted until the minimum profile depth is achieved.

11.0 TESTING PRIOR TO PRIMER COAT

- ✓ INSPECTION REQUIRED
  - Environmental Conditions
  - Verify Surface Preparation
  - Soluble Salts Tests
  - Oil and Grease Tests
  - Tape tests

Tape Test

The prepared steel surfaces are required to be clean prior to the application of the primer coat. To test surfaces, apply a strip of 3M Scotch Magic tape #810 against the steel surface leaving one end for easy removal of the tape. Take care not to contaminate the surface with oils from fingers. Remove the cellophane tape using the exposed end and visually inspect. Little or no dust should be on surface. If the area tested is contaminated the area will be cleaned and retested. The tests will be performed by the Inspector at a rate Three (3) tests for the first 1000 ft² plus one (1) test for each additional 1000 ft². The test tape will be attached to Daily Inspection Reports.

Disposal of Used Blast Media

All the used abrasive will be disposed of in accordance with local, state and federal regulations.

12.0 SURFACE PREPARATION OF COATED SURFACES (if necessary)

- ✓ INSPECTION REQUIRED
  - Environmental Conditions
  - Verify Surface Preparation
  - Soluble Salts Test Tests
  - Oil and Grease Tests
  - Tape tests

Surface preparation may become necessary to coated areas if recoat windows are exceeded or the coated surfaces become damaged. If recoat windows are exceeded then Gloss Removal may be completed by either SSPC SP-7 Brush-off Blast Cleaning or Hand Sanding with #150 to #200 wet/dry sandpaper. The de-glossed surfaces will then be pressure washed with clean potable water or wiped down with clean rags soaked with

denatured alcohol to remove dust. For chips and dings the touchup and repairs will be made to small areas that do not expose the steel substrate by brush or daubers depending on the access and location of the repair. Areas found to have exposed steel substrate larger than a dime will be spot cleaned using power tools so as to not cause additional damage to the surrounding surfaces. If the spot is small (dime size) then the area will be feathered back with #80-#120 emery cloth 2 inches back prior to application of the complete system. Inspection controls will be utilized to ensure that repairs are completed in a neat and uniform fashion to the surrounding surfaces. The brushing shall be done so that a smooth coat of coating material is applied as uniformly as possible is obtain the required coating thickness. The repairs will be completed in accordance with SSPC-PA-1. The onsite Inspector will continuously monitor the repairs for compliance.

REFERENCED DOCUMENTS

The following documents will be accessible for review by the Inspector and ASI Superintendent

1. Scope of Work, Specifications, and Drawings.

2. SSPC- QP -1 Library

3. UFGS Section 09 97 13.15, Low Voc Polysulfide Interior Coating of Welded Steel Petroleum Fuel Tanks 2/10

4. ASTM D 4417 Standard Test Methods for Field Measurement of Blast Cleaned Steel

5. ASTM D 7127 Standard Test Method for Measurement of Surface Roughness of Abrasive Blast Cleaned Steel Surfaces Using A Portable Stylus Instrument

6. ASTM D 4285 Standard Test Method for Indicating Oil or Water in Compressed Air

7. ASTM D 7393 Standard Practice for Indicating Oil in Abrasives

8. ASTM D 4414 Standard Practice for Measurement of Wet Film Thickness by Notch Gages

9. ASTM E 337 Standard Test Method for Measuring Humidity with a Psychrometer

WORK PLAN -B

COATING APPLICATIONS

REDHILL TANK NO.5 COATING

COATING OF UNDERGROUND STORAGE TANK

Island of Oahu

PURCHASE ORDER #54118-042-00

UFGS Specification 09 97 13.15

LOW VOC POLYSULFIDE INTERIOR COATING OF

WELDED STEEL PETROLEUM FUEL TANKS

Date: June 23, 2012

ASI Job No. 11005

Abhe & Svoboda, Inc. An Equal Opportunity Employer

Purpose and Intent

The Purpose and Intent of this Work Plan B is to set forth the processes and procedures to be implemented for Coating Application on the interior of the Redhill Underground Storage Tank no. 5, in order to the meet the specific requirements of UFGS Specifications 09 97 13.15(Low VOC Polysulfide Interior Coating of Welded Steel Petroleum Fuel Tanks). This Work Plan outlines the procedures for Safety, Environmental Control, and Quality Control as they apply to the Coating Application requirements. This Work Plan describes the phases of coating operations, addresses the sequence of work, and identifies the inspection and testing requirements, procedures and processes that are required to achieve the necessary quality requirements for the project. Requests for changes, modifications or revisions to this Work Plan will be submitted in writing for approval. Modifications to the plan must be approved prior to the respective work commencing. Changes, modifications or clarifications to this Work Plan will be forwarded to Nick Schmid for approval and submittal to the Contracting Officer as required. This Work Plan will be reviewed continuously and revised for increased effectiveness.

TABLE OF CONTENTS WORK PLAN-B

General Notes

1. Project Resources
2. Site Safety Hazard Analysis
3. Work Scheduling and Progress Reports
4. Pre-Surface Preparation Meeting
5. Hold Point Inspections Summary (Surface Preparation)
6. Environmental Control Systems
7. Receipt and Storage of Materials
8. Pre-Application Testing Prior to First Coat
9. First Coat Application
10. Inspection and D.F.T. Measurements of First Coat
11. Pre-Application Testing Prior to Finish Coat
12. Finish Coat Application
13. Inspection and D.F.T. Measurements of Finish Coat
14. Final Inspection, Holiday Testing and Repair Procedures
15. Completion Inspections

GENERAL NOTES

1. Coating Materials that do not conform to the Mil Spec requirements will be marked Do Not Use and isolated from the storage area.

2. Environmental conditions outside of the parameters as prescribed below will activate a Product Hold during Coating applications. The QC inspector will document the releasing and using of the identified products.

   - Minimum Air / Substrate Temperature 50° F
   - Maximum Air / Substrate Temperature 100° F
   - Minimum Dew Point Depression 18° F below coldest steel surface temperature
   - Concentration of Lower Explosive Limit : Not Determined

4. ASI intends to observe the lighting requirements outlined in SSPC Guide NO.12 and defined uses in permit and non permit confined space set up locations in accordance with OSHA 1910.

5. Pre-Coating Application testing will occur prior to application of any coatings to include the First Coat, Second Coat and any Repairs.

6. Testing and inspection in the form of low DFT mils, holidays, voids, pinholes, blisters and other detrimental conditions will be identified by the QC Inspector.

7. Cure times will be calculated by the QC Inspector throughout the curing process to obtain cure times and establish the Recoat Window and Extended Recoat Window for each coat. At the end of the Coating Application Process the QC Inspector and ASI Superintendent will calculate the Recoat Window.

8. ASI intends on completing gloss removal process only if the recoat windows are exceeded in accordance with specification requirements. The de-glossed surfaces shall be completed with the remaining application of the coating system.

9. Disposal of waste products including spent blast media, empty coating containers, thinner cans and used rags will be in accordance with local, state and federal regulations.

10. Changes, modifications or clarifications to this Work plan will be made in writing and forwarded to the Project Manager for Approval and submittal to the Contracting Officer as required.

1.0 PROJECT RESOURCES:

1.1 Equipment Resources

1.1.1 Explosion Proof Exhaust Ventilation Fans 4,000 – 10,000 cfm variable (if required)
1.1.2 Dust Collection Equipment (3) 5,000 cfm Dust Units
1.1.3 Interior Scaffolding (Boom System provided by WGS)
1.1.4 Explosion Proof Lights: General Work Area – 10 foot candles, Surface Prep and Coating Areas- 20 foot candles, Inspection and Test Locations – 50 foot candles
1.1.5 Air Compressor (375 cfm or larger) w/ Desiccant Air Dryer
1.1.6 56:1, 45:1, 40:1, or 30:1 Airless Spray Pumps (With Ground Wire)
1.1.7 ¼-⅜" Airless Spray Line w/ Airless Spray Gun
1.1.8 Graco XP-70 Heated Plural Component Airless Spray Pump
1.1.9 Airless Spray Tips (011, 013, 015, 017, 019, 021)
1.1.10 Pressure washers – 3700 psi with rotary tips
1.1.11 Dehumidification equipment (as required)
1.1.12 Related Quality Control Inspection Equipment

1.2 Materials
1.2.1 Interior Tank Coatings
1.2.1.1 Premier Lining, Modified Epoxy Novolac Polysulfide Coatings, PCS-TUFF Blue #1100-S and PCS-TUFF Off White #1100-S

1.2.1 Manpower:
1.2.1 Project Manager
1.2.2 Project Superintendent
1.2.3 Painter(s)
1.2.4 Laborer(s)

2.0 SITE SAFETY HAZARD ANALYSIS

A Site Specific Safety Hazard Analysis will be conducted by a Competent Individual, to assess and identify potential and actual physical and mechanical hazards that may or have the potential to cause injury or create or promote adverse health effects. The Hazard Analysis and Hazard Control Measures will be conducted in accordance with Title 29 Code of Federal Regulations 1926.20 "Employer Responsibilities" to include regular and frequent safety inspections. Employee Training will be conducted in accordance with the hazard analysis requirements and documented in accordance with Title 29 CFR 1926.21 to include applicable training requirements prescribed in Performance Based Standards to include EM-385-1-1 and SSPC Guide NO.12 Guide for Illumination of Industrial Painting Projects.
A Safety Management System has been developed to outline the Responsibilities and Authority of Key Personnel involved in Safety Performance and Regulatory Compliance.

A copy of the Site Safety Hazard Analysis and Control Measures will be incorporated into the Safety Management System upon the initial site safety inspection.

3.0 WORK SCHEDULING AND PROGRESS REPORTS

Scheduling

The Project Manager will keep ASI updated with the Progress Schedule that will be developed to detail phases of work, and inspection processes for the scope of services. The Progress Schedule will be communicated to involved parties for scheduling surface preparation activities, inspections and testing processes. The Schedule will be revised as applicable based on actual production, unpredicted inclement weather, and delays created by other parties. The Project Manager, QC Inspector and ASI Superintendent will make a diligent effort to maintain good communications so that inspections and testing will be performed in a timely manner with the scheduled work processes. Inclement Weather Considerations Local forecast will be utilized to coordinate work activities, to monitor weather changes, particularly if there is a sharp increase in relative humidity and elevated dew points. These will be evaluated on a case by case event in order to predict and assess adverse impacts created by atmospheric conditions. The Project Manager, QC Inspector and ASI Superintendent will work closely together to ensure weather conditions are interpreted correctly to the Contracting Officer's representative.

4.0 PRE-APPLICATION MEETING

Prior to surface preparation or coating operations, a Pre-Application Meeting will be conducted with all involved parties to include but may not be limited to:

- Abhe & Svoboda, Inc. Representatives
- Willbros. Government Services Representatives
- QC Inspector
- NAVY Representatives

Items to be discussed include the following

- Specification Section 09 97 13.15 Coating Application Requirements
- Review of Work Plan B
- Safety Management System
- Inspection Procedures and Hold Point Inspections for Coating Applications
- Inspection, Verification, Documentation and Approval Procedures
- Environmental Control Systems
- Recordkeeping and Reporting

A Daily Planning Meeting will be conducted each morning or as needed or deemed necessary to discuss the scheduled activities. The meeting will be attended by the Project Manager, QC Inspector, ASI Superintendent. Items will be discussed pertaining to work locations, processes, required testing and inspections. Deviations from the Work Plan or

Contract Requirements will require Contracting Officer's approval and a Work Plan revision.

5.0 HOLD POINT INSPECTIONS

Hold Point Inspections will occur throughout the project during specific periods as detailed within Section 09 97 13.15. A Hold Point Inspection can consist of visual inspections and or testing to acquire data results to establish the steps and actions for scheduled surface cleaning processes. The QC Inspector and ASI Superintendent will conduct inspections and tests at regular intervals and document the findings per requirements. The inspection data results will be forwarded to the Project Manager for compliance verification.

Hold Point Inspections (Coating Applications)

Step	Action
1) Prior to Production	✓ Safety
2) Environmental Conditions Maintain conditions through out the surface preparation and prime coat application to prevent the development of corrosion on blast cleaned surfaces	✓ Temperature ✓ Humidity ✓ Dew Point ✓ Surface Temperature
3) Coating Material Sample Testing Results are complete	✓ Laboratory Testing and Verification of Conformance
4) Pre-Application Testing for Surface Contaminants Where visual examination or spot testing indicates contamination, perform sufficient testing to verify non-contamination, or to define extent of contamination for appropriate treatment	✓ Visual Inspections ✓ Tape Test ✓ Presence of Oil or Grease ✓ Surface Soluble Salts Testing
5) Mixing Coatings / Pot Life	✓ Environmental Conditions ✓ Ratios ✓ Reduction
6) Application of First Coat	✓ Environmental Conditions ✓ Coverage ✓ Wet Film Thickness
7) First Coat Inspection	✓ Visual Inspection ✓ Environmental Conditions ✓ Dry Film Thickness
8) Cure Time	✓ Recoat Window ✓ Extended Recoat Window
9) Pre-Application Testing for Surface Contaminants Where visual examination or spot testing indicates contamination, perform sufficient testing to verify non-contamination, or to define extent of contamination for appropriate treatment	✓ Visual Inspections ✓ Tape Test ✓ Amine Blush Testing ✓ Presence of Oil or Grease ✓ Surface Soluble Salts Testing
10) Application of Finish Coat	✓ Environmental Conditions ✓ Coverage ✓ Wet Film Thickness
11) Finish Coat Inspection	✓ Visual Inspection ✓ Environmental Conditions ✓ Dry Film Thickness
12) Cure Time	✓ Recoat Window ✓ Extended Recoat Window
13) Cure Time, Immersion Service 14 Days	✓ Recoat Window

Four (4) days with Dehumidification on final coat	✓ Environmental Conditions
14) Holiday Testing NACE RPO 188	✓ Low Voltage Wet Sponge
15) Repairs / Touch-up	✓ Spot Repairs
16) Final Inspection	✓ Total Coating System Inspection

6.0 ENVIRONMENTAL CONTROL SYSTEMS

Interior of Tank no.5
An Environmental and Atmospheric Control System has been designed to control environmental and atmospheric conditions inside the tank. Environmental and Atmospheric controls are a specification requirement for surface preparation operations. Therefore, if weather conditions develop elevated humidity and dew points, all necessary systems will become an essential part of the process to control environmental conditions as needed to maintain the blast quality specified.

Environmental Conditions
The efficiency of the Environmental Control System will be evaluated each and every day throughout the surface preparation, coating application and curing phases. The QC Inspector will measure environmental and ambient conditions throughout the work shifts, Sling Psychrometers and Dual Magnetic Surface Thermometers. Dew Point Depression will be calculated from the US Weather Bureau Psychrometric Tables and atmospheric Dew Points compared to the coolest surface temperature will be measured with a calibrated electronic dew point meter that will measure readings directly at the surface. The instrument must be traceable to NIST. Production activities will only be permitted when the NACE Inspector has measured the environmental conditions to determine the requirements listed below for application of the Intermediate and Topcoat.

- Minimum Air / Substrate Temperature 50° F
- Maximum Air / Substrate Temperature 100° F
- Minimum Dew Point Depression 18° F below coldest steel surface temperature
- Concentration of Lower Explosive Limit :Not Determined

7.0 RECEIPT AND STORAGE OF MATERIALS

- ✓ INSPECTION REQUIRED
  - Coating Storage
  - Coating Sample Test
  - Environmental Conditions

Coating Storage
Materials required for the performance of the scope of services will be shipped, stored and handled in accordance with the material manufacturer instructions, the contract specifications and SSPC PA-1 Guidelines. Coating Materials will be stored in a dry

location maintaining ambient conditions are above 50° F with an ambient air temperature greater than 5° F of the dew-point at all times. The QC Inspector or the ASI Superintendent will inspect the storage facility each day to ensure adequate storage and environmental conditions. A Boxcar Continuous Monitoring Device or equal may be installed to continuously document temperature, humidity and dew points, if required by the specification.

Coating Sample Test(s)
Coating products delivered prior to or during coating operations will be sampled to verify conformance with requirements as detailed in Table II of Section 09 97 13.15. The conformance test results, of the previously tested coatings, would be submitted to the project manager for verification purposes. If there are no previously tested batches available, and because of the following reasons: The very small quantities of coatings needed to complete this project; the location of the project on the Island of Hawaii, Hawaii; the schedule when the work is to be completed; and to accommodate the current shipping requirements of hazardous materials from the job site that may not employ the qualified personnel to ship said "Hazardous Materials.", ASI will request a variance to allow the opportunity to collect samples for testing of the coating products at the point of manufacture or the storage warehouse in lieu of the job site, as specified by the specifications. Each of the item samples would be collected and shipped to an approved testing laboratory for testing to the requirements of Table II of the respective section listed above. Collection at the manufacture facility or storage warehouse may be witnessed by a Government representative or the services of an Independent Coating Consultant may be employed, geographically located to either of these facilities. All samples would be tracked by means of a "Chain of Custody" to assure proper handling. This alternate procedure has been used on previous projects with similar circumstances and has worked very well.

One liter (quart) samples will be collected at random for each batch of base material and proportional samples of each activator based on mix ratio. Samples will be sent to an approved laboratory for testing. Ratios and proportions will be determined by measuring the units by volume to ensure that no out of ratio kits are created and the remaining coating material will be used in the work process. The mixing of partial kits will be utilized for touch up processes so as not to waste coating materials and will be monitored by the QC Inspector to ensure proper mixing is completed at all times. Results of the independent lab tests will be submitted to the CO's Representative. Coating operations will not be permitted to begin until the CO's Representative has approved the test result. The QC Inspector and ASI Superintendent will keep a current inventory and record of all approved products for the coating operations. Components not meeting the appropriate specifications of Table II will be conspicuously marked and removed from the site.

8.0 PRE-APPLICATION TESTING PRIOR TO FIRST COAT

- ✓ INSPECTION REQUIRED:
  - Environmental Conditions
  - Surface Defects

- Surface Cleanliness (Oil or Grease, Soluble Salts)
- Tank Interior Product Verification - Premier Lining, Modified Novolac Polysulfide Coatings

✓ During the course of abrasive blast cleaning and the First Coat application testing will be conducted to ensure that the substrate meets the Surface Preparation Requirements in the Specifications Inspections but must also meet the Pre-Application Testing prior to First Coat application.

9.0 FIRST COAT/PRIMER COAT APPLICATION

✓ INSPECTION REQUIRED:
- Environmental Conditions
- Mixing and Pot Life
- Wet Film Thickness
- Coverage

ASI will accomplish application of the First Coat of PCS 1100 by using a grounded Graco XP-70 Plural Component airless spray pump. The pump size will be a minimum of 58:1 ratio. One spray applicators will be equipped with airless spray guns fitted with .015 – .023 RAC Spray Tip. Spray tip orifice size is dependent upon the actual viscosity at time of application of the Firs Coat.

Tank Interior: ASI intends to apply a PCS 1100 stripe coat by brush prior to the first coat, working the coating material into corners, crevices, bolts, welds, and irregular surfaces in accordance with SSPC-PA-1. Brush application will only be used for small best effort areas. For some crevices PCS 1100 will be applied with daubers to ensure good penetration of the coating materials into tight areas on Shell Surfaces and Miscellaneous Components. No Termination Joints (Cold Joint) will be installed near the welds. Tank coating application will be uniform and continuous.
Cure times will be calculated by the QC Inspector and ASI Superintendent during the start of the First Coat application to include the Stripe Coat and Full First Coat. Cure times will be calculated throughout the curing period to obtain a definite cure time and establish the Recoat window.

Mixing and Pot Life

Mixing Ratio:	PCS 1100:	1 Part A to 1 Part B by Volume (1:1)
Induction Time:	50-60 degrees F –1/2- Hour	

76-80 degrees F –1/4- Hour
81-90 degrees F--1/8- Hour
> 90 degrees F – 5 Minutes Mixing

Pot Life: 75 degrees – 45-90 Minutes

Reduction: No Thinners will be used

Wet Film Thickness Measurements
The Applicators will be equipped with Wet Film Thickness Gauges to measure the application and coverage of the First Coat. WFT of the PCS 1100 First Coat will be approximately 12-15 mils.

Coating Application Monitoring
Prior to starting the First Coat Application the QC Inspector and ASI Superintendent will mark out the cold joint locations for the applicators to square up the intermediate coat (if needed). These are the "Cold Joints" and will be positioned at least six (6) inches away from welds. The Floor area will be one continuous coating application free of any termination joints.

Cure Time Projection
Close attention will be afforded to the curing of coatings to ensure proper sequencing and scheduling of additional coats. Cure times and recoat schedules will be calculated each day based on ambient condition and film thickness. The QC Inspector will maintain a log of activities and events to include the start and stop times of coating application detailing specific areas. The QC Inspector will monitor the temperature of the Air and Substrate and utilize the highest temperature to develop the Recoat Window and Extended Recoat Window. Coating application is scheduled during the day hours and will result in the highest temperature. The QC Inspector will monitor the ambient and surface temperatures and use the calibrated instruments to obtain the highest temperature during application or during the curing time. At the end of each Application Period and during the cure time the QC Inspector will calculate the Recoat Window and record the day and time on the Inspection Report and communicate this period to the Project Manager.

10.0 INSPECTION AND D.F.T. MEASUREMENTS OF FIRST COAT

- ✓ INSPECTION REQUIRED
  - Visual Inspection

- Cure
- Dry Film Thickness
- Coverage
- Surface Contaminates
- Cleanliness

Visual Inspection
A complete visual inspection will be conducted of the applied First Coat to detect defects in the form of coverage, holidays, voids, pinholes, blisters and other detrimental conditions by the QC Inspector

Dry Film Thickness
Dry film thickness measurements of the Primer Coat will be documented in accordance with SSPC PA-2 utilizing a Type II fixed probe gauge. Three (3) measurements will be collected per spot and averaged and five (5) spot measurements will be collected of which the five (5) spot measurements will be averaged. Each spot measurement will be within 80 percent of the minimum dry film thickness and 120 percent of the maximum dry film thickness and the average of the five spot measurements. Testing will be conducted within three (3) 100 square foot locations for the first 1,000 square feet and one (1) 100 square foot location for each additional 1,000 square feet thereafter. Dry Film Thickness measurements will be conducted and gauge calibrated in accordance with SSPC PA-2.

The First Coat will be inspected for surface defects and dry film thicknesses by the QC Inspector. Dry film thickness requirements for the PCS 1100 will be 12 to 15 mils. The Project Manager will review the inspection report and dry film thickness measurement for compliance. Dry Film Thickness measurements outside the requirements will result in a Production Hold requiring touch-up and repair work.

11.0 PRE-APPLICATION TESTING PRIOR TO FINISH COAT

✓ INSPECTION REQUIRED

- Environmental Conditions
- Cure Time
- Surface Contaminates
- Cleanliness
- Product Verification -

Cure Time Projections

RE-COAT WINDOWS ----Epoxy over Epoxy

Temperature degrees F	60-70	71-80	81-90	91-100	101-110	111-120
Recoat Window (Hrs)	36-336	36-240	24-168	24-96	16-48	16-48

Soluble Salts Test
At randomly selected locations, soluble salts testing will be conducted at one half of the prescribed rate for bare steel. The concentration of soluble salts will be measured and utilized to dictate the necessity of chloride, sulfate, or nitrate ion removal.

For the Interior of the tank. One (1) or more readings greater than Non-detectable for chlorides, sulfates, or nitrates will trigger the need for the removal of soluble salts. If contamination is found revert to the specified testing rate for bare steel.

The QC Inspector and will conduct the Soluble Salt Testing as prescribed above utilizing a Chlor*Test "CSN" kit as manufactured by Chlor*Rid International or equal,(ARP Model Number RPCT-07-001) after the high pressure water cleaning prior to blast cleaning and between coating applications. Retain and label test tubes for verification and documentation.

Soluble Salts Removal
Surfaces that are found to be non-compliant shall be pressured washed with potable water only or potable water modified with a soluble salts remover solution, such as Chlor*Rid or equal and retested. This procedure will be performed until the tests show allowable results.

Oil and Grease Test
A Water Mist (Water Break) Test will be utilized to detect the presence of oil or grease on the steel substrate prior to and after surface preparation activities, and between coating applications. A good Visual Inspection, and if deemed necessary a Cloth Rub Test will accompany the Water Break Test to ensure the quality requirements are maintained by the QC Inspector. Areas exhibiting the presence of oil or grease will be marked for correction prior to allowing further activities. Solvent cleaning in accordance with SSPC SP-1 will be utilized to remove the presence of oil or grease if found. Care will be afforded to prevent further contamination by workers and inspection personnel.

Tape Test
The Coated steel surfaces are required to be clean prior to the application of the finish coat. To test surfaces, apply a strip of clear adhesive cellophane tape against the steel surface leaving one end for easy removal of the tape. Take care not to contaminate the surface with oils from fingers. Remove the cellophane tape using the exposed end and visually inspect. Little or no dust should be on surface. If the area tested is contaminated the area will be cleaned and retested. The tests performed will be conducted at one half of the prescribed rate for bare steel by the QC Inspector.

Amine Blush Test

The epoxy coated surfaces are required to be tested for Amine Blush prior to the application of the Finish coat. To test surfaces, using an AMINE BLUSH CHECK kit manufactured by Elcometer, or equal. The tests will be performed by the QC Inspector at a rate Three (3) tests for the first 1000 ft² (100 m²) plus one test for each additional 2000 ft² (200m²). Surfaces that are found to be non-compliant shall be pressured washed with potable water and retested. This procedure will be performed until the tests show allowable results.

12.0 FINISH COAT APPLICATION

- ✓ INSPECTION REQUIRED:
  - Environmental Conditions
  - Mixing and Pot Life
  - Wet Film Thickness
  - Coverage

Environmental Conditions
Environmental conditions will be as stated in the minimum and maximum requirements. The QC Inspector will inspect product mixing and monitor pot life during the Intermediate Coat application.

Mixing and Pot Life

Mixing Ratio:	PCS 1100:	1 Part A to 1 Part B by Volume (1:1)
Induction Time:	50-60 degrees F –1/2- Hour 76-80 degrees F –1/4- Hour 81-90 degrees F--1/8- Hour > 90 degrees F – 5 Minutes Mixing	
Pot Life:	75 degrees – 45-90 Minutes	
Reduction:	No Thinners will be used	

Wet Film Thickness Measurements
The Applicators will be equipped with Wet Film Thickness Gauges to measure the application and coverage of the Finish Coat. WFT of the Finish coat will be approximately 12-15 mils for the Finish Coat.

Coating Application Monitoring
Prior to starting the Intermediate Coat Application the QC Inspector and ASI Superintendent will mark out the cold joint locations for the applicators to square up the intermediate coat (if needed). These are the “Cold Joints” and will be positioned at least

six (6) inches away from welds. The Floor area will be one continuous coating application free of any termination joints.

ASI will accomplish application of the Finish Coat of PCS 1100 by using a grounded Graco XP-70 Plural Component airless spray pump. The pump size will be a minimum of 58:1 ratio. One spray applicators will be equipped with airless spray guns fitted with .015 – .023 RAC Spray Tip. Spray tip orifice size is dependent upon the actual viscosity at time of application of the Finish Coat.

13.0 INSPECTION & D.F.T. MEASUREMENTS OF FINISH COAT

- ✓ I INSPECTION REQUIRED
  - Visual Inspection
  - Cure
  - Dry Film Thickness
  - Coverage
  - Surface Contaminates
  - Cleanliness

The First and Finish Coats will be inspected for surface repairs or touch up prior to the Final Acceptance of the Finish Coat. The dry film thickness will be taken by the QC Inspector. Dry film thickness of 24 to 30 mils will be obtained for the Finish Coat.

Visual Inspection
A complete visual inspection will be conducted to the applied Finish Coat to determine that specified quality requirements are maintained by the QC Inspector.

Dry Film Thickness Measurements
Dry film thickness measurements of the Intermediate Coat will be documented in accordance with SSPC PA-2, utilizing a Type II fixed probe gauge. Three measurements will be collected per spot and averaged; and the five spot measurements will to be averaged. Each spot measurement will be within 80 percent of the minimum dry film thickness and 120 percent of the maximum dry film thickness and the average of the five spot measurements of the total system applied. Testing will be conducted within three (3) 100 square foot locations for the first 1,000 square feet and one (1) 100 square foot location for each additional 1,000 square feet thereafter. Dry Film Thickness measurements will be conducted and gauge calibrated in accordance with SSPC PA-2.

If additional coats are required after the initial application of the finish coat for the PCS 1100 in the UST's the steps laid out in Section 13.0 will be followed again. This will be the process until Final Acceptance is approved.

UST's - Interior Coating System

Coat	Min DFT (mils)	Max DFT (mils)
First Full Coat	12	15
Finish Coat	12	15
Total System =	24	30

14.0 FINAL INSPECTION, HOLIDAY TESTING AND PROTECTION OF COATING SYSTEM:

- ✓ I INSPECTION REQUIRED
  - Visual Inspection
  - Environmental Conditions
  - Dry Film Thickness
  - Final Cure
  - Holiday Testing & Touch up

Final Inspection

A Final Inspection will be conducted by the QC Inspector, ASI Superintendent and Project Manager after 48 hours of cure time. A complete visual inspection will be conducted on the applied Coating System to detect defects in the form of cracking, holidays, voids, blisters, pinholes and other detrimental conditions by the QC Inspector. Final cure of the applied topcoat shall be a minimum of fourteen (14) days prior to immersion service. The QC Inspector and ASI Superintendent will perform a Low Voltage Holiday Detection Test on the interior tank coating system. The testing will not be conducted any sooner than 72 hours after the topcoat has been applied. A Tinker Razor Low Voltage Wet Sponge method of NACE SPO188 will be utilized, and properly grounded to the substrate. Holidays, discontinuities will be marked for repair. Defects in the form of low milage, holidays, pinholes, blisters, nicks and dings that have caused discontinuities in the coating system will be marked by the QC Inspector and ASI Superintendent. The QC Inspector and ASI Superintendent will review any deficiencies, revealed during these inspections. Touchup and repairs will be made to small areas that do not expose the steel substrate by brush or daubers depending on the access and location of the repair. Areas found to have exposed steel substrate larger than a dime will be cleaned using a vacuum blast head, pencil blaster so as to not cause additional damage to the surrounding surfaces. If the spot is small (dime size) then the area will be feathered back with #80-#120 emery cloth 2 inches back prior to application of the complete system. Inspection controls will be utilized to ensure that repairs are completed in a neat and uniform fashion to the surrounding surfaces. The brushing shall be done so that a smooth coat of coating material is applied as uniformly as possible is obtain the required coating thickness. The repairs will be completed in accordance with SSPC-PA-1. The on site QC Inspector and ASI Superintendent will continuously monitor the repairs for

compliance. Upon completion of repair work a follow-up Final Inspection will be conducted as stated herein.

Protection of Coating System
ASI Quality Control will ensure that inspection personnel, workers will be provided with clean canvas or other approved shoe covers when walking on coated surfaces, regardless of curing time allowed. For heavily trafficked areas, provide cushioned walking mats for additional protection. In addition to using protective measures for occupancy after the coating application ASI will maintain a clean access way that will minimize the possibility of tracking in dirt and debris.

15.0 COMPLETION INSPECTIONS

Punch-Out Inspection
Near the completion of work or increment thereof, ASI Superintendent shall notify the Project Manager that a punch list inspection is ready to complete.

Pre-Final Inspection
The Project Manager shall ensure that any items noted on the punch list are corrected prior to the Government inspection or Contracting Officers Representative.

Final Acceptance Inspection
The Project Manager, QC Inspector, ASI Superintendent, and the Contracting Officers Representative will complete this inspection. Upon completion of the Coating System, a Final Inspection will be conducted. The Final Inspection will consist of a complete visual inspection of the Coating System and property for project Close-Out.

Close-Out Documents Submittal
Daily inspection records will be submitted to the Project Manager on a daily basis. Upon final completion of the project, a submittal will be transmitted containing all inspection reports, test, inspections, measurements, non-conformance actions, corrective reports, and other pertinent information.

Final Cleanup
Following completion of the coating process work, remove debris, equipment, and materials from the site. Remove temporary connections to Government or Contractor furnished water and electrical services. Leave work areas in a broom clean condition.

REFERENCED DOCUMENTS

The following documents will be accessible for review by the Project Manager, QC Inspector and ASI Superintendent

1. Prime Contract

2. SSPC- QP -1 Library

3. UFGS Section 09 97 13.15, 2011 LOW VOC POLYSULFIDE INTERIOR COATING OF WELDED STEEL PETROLEUM FUEL TANKS

4. UFGS Section 09 97 13.27, Exterior Coating of Steel Structures- 01/07

5. UFGS Section 33 52 80, Liquid Fuels Pipeline Coating Systems- 10/07

CONTRACTOR'S SUBMITTAL TRANSMITTAL

CONTRACT NO.	TRANSMITTAL NO.	DATE
N 62583-08-D-0132/0003	017	12/18/2012

FROM CONTRACTOR
Willlbros Government Services
East 71st Street
Tulsa, OK 74136

TO
[redacted]
Specialty Center Acquistions NAVFAC
[redacted]

PROJECT TITLE AND LOCATION
Red Hill Tanks 5 and 17

Tank 5 Work Plan A- Abrasive Blasting - Amendment 1

CONTRACTOR USE ONLY

List only one specification division per form

List only one of the following categories on each transmittal form and indicate which is being submitted

☐ Contractor Approval ☒ Govt Approval ☐ Deviation/Substitution (Govt Approval)

REVIEWER USE ONLY

ACTION CODES

A Approved
D Disapproved
AN Approved as Noted
ANR Approved as Noted Resubmit
RA Receipt Acknowledged

GOVT USE ONLY

ACTION CODES

A Approved
D Disapproved
AN Approved as Noted
ANR Approved as Noted Resubmit
RA Receipt Acknowledged

ITEM	SPEC. SECT. & PARA. and/or DWG. NO.	ITEM IDENTIFICATION (Type, size, model no., Mfg. Name, drawing or brochure number)	NO. OF COPIES	ACTION	REVIEWER'S INITIALS AND DATE	ACTION	GOVERNMENT REPRESENTATIVE INITIALS, CODE AND DATE
1		Work Plan A - Abrasive Blasting Amendment 1	1				
2		Tank 5 Blasting/Coating schedule update	1				

CONTRACTOR'S SUBMITTAL TRANSMITTAL	CONTRACT NO.	TRANSMITTAL NO.	DATE
	N 62583-08-D-0132/0003	017	12/18/2012

FROM CONTRACTOR
Willlbros Government Services
East 71st Street
Tulsa, OK 74136

TO
[redacted]
Specialty Center Acquistions NAVFAC
[redacted]

PROJECT TITLE AND LOCATION
Red Hill Tanks 5 and 17

Tank 5 Work Plan A- Abrasive Blasting - Amendment 1

CONTRACTOR'S CERTIFICATION AND COMMENTS
IT IS HEREBY CERTIFIED THAT THE EQUIPMENT AND/OR MATERIAL SHOWN AND MARKED IN THIS SUBMITTAL IS THAT PROPOSED TO BE INCORPORATED INTO THIS CONTRACT, IS IN COMPLIANCE WITH THE CONTARCT DRAWINGS AND SPECIFICATIONS, AND CAN BE INSTALLED IN THE ALLOCATED SPACES.

DATE RECEIVED BY REVIEWER	DATE RECEIVED BY GOVT
REVIEWER'S COMMENTS	GOVT COMMENTS

CONTRACTOR'S REPRESENTATIVE (SIGNATURE)	DATE	REVIEWER'S SIGNATURE	DATE	GOVT REP SIGNATURE	DATE
	12/18/2012				

WORK PLAN -A

SURFACE PREPARATIONS

REDHILL TANK NO. 5 COATING

COATING OF UNDERGROUND STORAGE TANK

OHAU

Purchase Order No. 54118-042-00

UFGS Specification 09 97 13.15

LOW VOC POLYSULFIDE INTERIOR COATING OF
WELDED STEEL PETROLEUM FUEL TANKS

Date: June 22, 2012

ASI Job No.

ABHE & SVOBODA INC.

17066 Revere Way, Prior Lake, MN 55372
Ph: (952) 447-6025; Fax: (952) 447-1000

91-161 Olai Street, Kapolei, HI 96707
Ph: (808) 682-4833; Fax: (808) 682-0780

December 19, 2012

To: WILLBROS Government Services

From: Abhe & Svoboda, Inc.

Reference: Tank Coating Services - Redhill Fuel Complex, Tank 5

Subject: Fabricated Dust Unit

Mr. Gilbert:

Below is a list of proposed materials and equipment that Abhe & Svoboda, Inc. intends to use to fabricate a dust unit to complete the abrasive blasting of Tank No. 5:

1. Blower: 20,000 cfm, 20 to 25 hp motor, approx. 28 amps
2. Filter Cartridges: 8.5" dia. X 36.5" tall with 21,600 in² of Filter Media Surface Area
3. ¾" Structural Grade Plywood (BB Struc 1)
4. 4"x4" Corner posts
5. 2"x4" Framing and Internal Bracing
6. Dust Unit Suction Line (This is currently in place from the original set-up)
7. Dust Sock for Blower Exhaust
8. Spray Foam and Caulking for Sealing of Seams

Thank You,

Nick Schmid
Area Manager

Red Hill Tank 5
Work Plan A – Abrasive Blasting
Amendment 1
December 18, 2012

Replace Section 1.1.2 of Work Plan A – Abrasive Blasting dated June 22, 2012 with the following:

PROPOSED CHANGES TO TANK 5 DUST COLLECTION EQUIPMENT

During the course of the abrasive blasting operation in Red Hill Tank 5, it became necessary for Abhe & Svoboda to return the three DC 5000 E dust collection units which had been rented for the project. This caused an unanticipated delay in the completion of the blasting operations. After an extensive search for suitable replacement equipment, it was determined that such equipment did not exist and that no other equipment could be retrofitted to meet the air flow capacity and extremely limited dimensional requirements presented by the Red Hill complex.

Abhe & Svoboda determined that the only practical solution which would allow the blasting operations to resume quickly was to custom build a dust collection system that could be transported into the lower tunnel and assembled in place at Tank 5.

The proposed system will consist of two existing ducts running to a structural plywood cabinet housing 18 HEPA filters. The plywood box will be constructed around a 4x4 lumber frame and internally braced with 2x4 lumber supports (the previous dust collection system included a plywood plenum which was not as heavily constructed as the proposed unit which performed without problem under the same vacuum pressures that the new box will be exposed to). A 20-25 hp blower motor rated at 28 amps will provide approximately 20,000 cfm of air flow across the filters. A filter sock will be placed on the blower discharge to help disperse air flow (this should help eliminate stirring up dust from the tunnel repair operations located adjacent to Tank 5.

Air quality will be monitored inside the tank and at the dust collector blower discharge as it was with the previous dust collection system.

A functional test of the unit will be performed prior to resuming blasting operations.

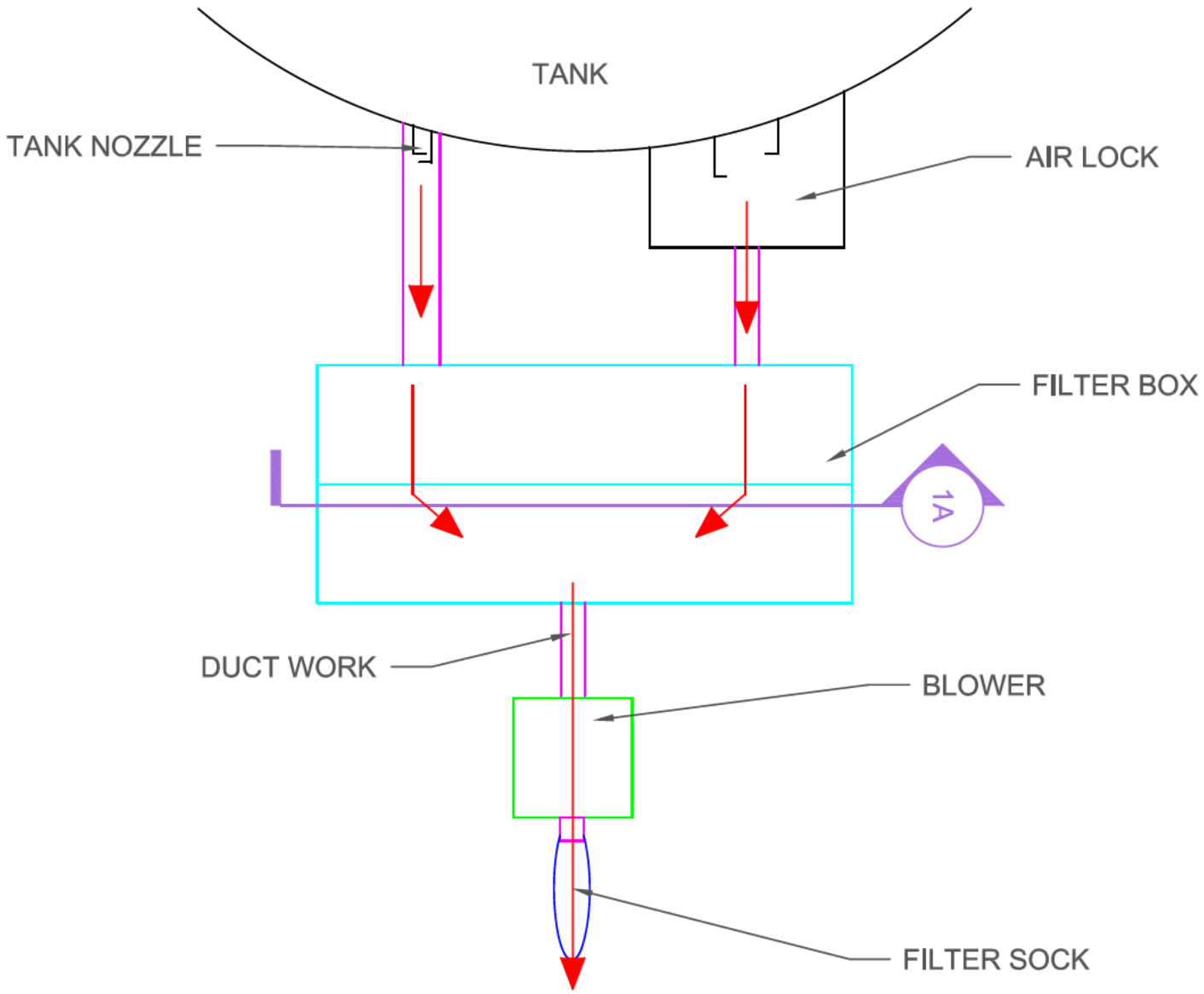

1 FILTER BOX PLAN VIEW
NO SCALE

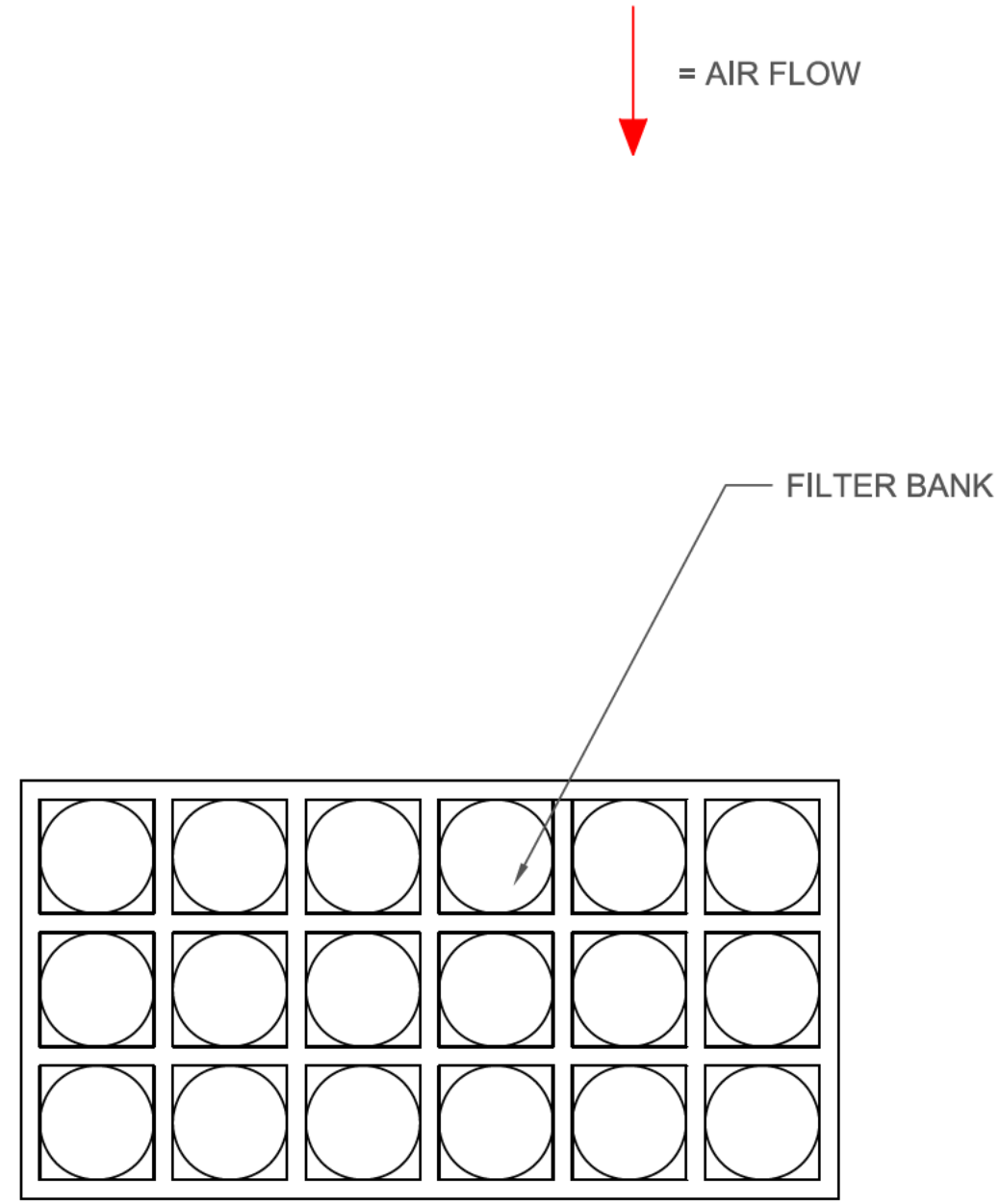

1A FILTER BOX CUT SECTION
NO SCALE

ABHE & SVOBODA INC.
91-161 OLAI STREET, KAPOLEI, HI 96707
PH: (808) 682-4833, FAX: (808) 682-0780

SHEET DESCRIPTION: PROPOSED VENTILATION DETAIL

DRAFTER: DL	CONTRACT TITLE: COATING OF RED HILL TANK NO. 5	ASI JOB NO. 12008
DATE: 12-18-12		
CHECKED:	PROJECT NO: PO#54118-042-00	DWG NO. 001
DATE:		

ID		Task Name	Duration	Start	Finish	Predecessors
1		**Red Hill Tank No. 5 Coating**	**50 days**	**Thu 12/27/12**	**Fri 2/22/13**	
2		Fabrication, Mobilization, and Setup of New Dust Collection System	15 days	Thu 12/27/12	Mon 1/14/13	
3		Abrasive Blasting (24hr shifts) Added a day for unknown	5 days	Tue 1/15/13	Sat 1/19/13	2
4		***Ventilate Tank to remove dust.In order to prep tank for coating***	***2 days***	***Sun 1/20/13***	***Mon 1/21/13***	***3***
5		First Coat Application (24hrs)	2 days	**Tue 1/22/13**	Wed 1/23/13	4
6		Cure Time for First Coat (3 calendar days)	3 days	Thu 1/24/13	Sat 1/26/13	5
7		Second stripe Coat Application (24hrs) Will need to stripe on sunday also	3 days	Sun 1/27/13	Tue 1/29/13	6
8		Cure Time for 2nd Stripe Coat (3 calendar days)	3 days	Wed 1/30/13	Fri 2/1/13	7
9		Apply 2nd Full coat (1st paint applied 1/22)	2 days	Sat 2/2/13	Sun 2/3/13	8
10		Allow 2nd Full Coat to Cure (3 calendar days)	3 days	Mon 2/4/13	Wed 2/6/13	9
11		Holiday Detection (tentative)	2 days	Thu 2/7/13	Fri 2/8/13	10
12		Touch-ups (tentative)	1 day	Mon 2/11/13	Mon 2/11/13	11
13		Tear Down of Equipment (tentative)	4 days	Tue 2/12/13	Fri 2/15/13	12
14		Removal of Equipment (Tentative)	5 days	Mon 2/18/13	Fri 2/22/13	13

Project: Expedited start up 21 Schedul
Date: Tue 12/18/12

Task		External Milestone		Manual Summary Rollup	
Split		Inactive Task		Manual Summary	
Milestone		Inactive Milestone		Start-only	
Summary		Inactive Summary		Finish-only	
Project Summary		Manual Task		Progress	
External Tasks		Duration-only		Deadline	

Prepared for

NAVAL FACILITIES ENGINEERING COMMAND
ENGINEERING SERVICE CENTER
Port Hueneme, California

Technical Submittal for Project:

Project Title: CLEAN, INSPECT, AND REPAIR STORAGE TANKS 5 & 17
Location: PEARL NAVAL BASE – REDHILL COMPLEX, Pearl Harbor, HI
Task Order No.: N62583-09-D-0132/0003
WGS Project Number: 54118
Date: 12 Apr, 2010

TANK 5 & 17 CLEANING, INSPECTION AND REPAIRS PROJECT EXECUTION WORK PLAN SPECIFIC TO TK5 WARRANTY WORK

Submitted By:
Willbros Government Services, LLC
2087 E. 71st Street
Tulsa, OK 74136

Rev	Date	Description	Reviewed	Approved
12	9/23/2014	Revised Per Government Comments	JS	JH
12	10/2/2014	For Construction	JS	JH

RECORD OF REVISIONS

Rev	Date	Description	Reviewed	Approved
0	5/24/10	Approved – NAVFAC ESC / FISC Review	DB	TDA
1	11/9/10	Revised for JP5 Pipeline Repairs	RC	TDA
2	2/12/14	Revised for TK 5 Warranty Work	JH	TDA
3	2/25/2014	Revised for TK 5 Warranty Work	JH	TDA
4	2/26/2014	Revised for TK 5 Warranty Work	JH	TDA
5	3/03/2014	Revised for TK 5 Warranty Work	JH	TDA
6	3/31/2014	Revised for TK 5 Warranty Work	JH	TDA
7	4/04/2014	Final TK 5 Warranty Work	JH	TDA
8	5/06/2014	Final TK 5 Warranty Work Updated Pressure Plan	JH	RGG
9	6/25/2014	Revised for change in Personnel	JH	RGG
10	7/11/2014	Issue Warranty Repair Plan	TA	RG
11	8/7/2014	Revised Per Government Comments	JH	TA

Distribution is limited to US Government agencies and their contractors; administrative/operational use within the context of this project. Other request shall be referred to the Naval Facilities Engineering Service Center.

TABLE OF CONTENTS

Administrative Section

I. Project Work Plan Cover
II. Record of Revisions
III. Table of Contents
IV. List of Tables, Figures and Appendices
V. List of Acronyms and Abbreviations

Project Section

1.0 Project Scope of Work and Procedures.....6
- 1.1 Introduction
- 1.2 Background and Objectives
- 1.3 Work Plan Implementation
- 1.4 Project Specifications
- 1.5 Required Permits

2.0 Project Schedule and Controls.....8
- 2.1 Project Schedule
- 2.2 Critical Path

3.0 Responsible of Parties.....9
- 3.1 Program Manager
- 3.2 Program Health and Safety Officer
- 3.3 Project Manager
- 3.4 Project Engineer
- 3.5 Site Manager
- 3.6 Site Safety and Health Officer
- 3.7 Subcontractors
- 3.8 Change Management

4.0 Project Execution Strategy.....13
- 4.1 Mobilization and Site Preparation Plan
- 4.2 Confined Space
- 4.3 Hot Work
- 4.4 Transportation of Materials and Equipment Plan
- 4.5 Project Task and Sequences
- 4.6 Health, Safety and Environmental Management
- 4.7 Subcontractor Management and Coordination
- 4.8 Quality Assurance
- 4.9 Repairs
- 4.10 Demobilization

5.0 Key Personnel.....32

6.0 Technologies, Materials and Equipment.....33

7.0 Hazardous Waste Disposal.....34

8.0 Project Reporting and Documentation.....35

Distribution is limited to US Government agencies and their contractors; administrative/operational use within the context of this project. Other request shall be referred to the Naval Facilities Engineering Service Center.

LIST OF TABLES

Number	Title	
Table 3-1	Project Organization	9
Table 3-2	Subcontractor Organizations and Associated Project Task	12
Table 5-1	Key Personnel Qualifications	32

LIST OF FIGURES

Number	Title	
Figure 4-1	Project Sample Tank Calibration Chart	23

LIST OF APPENDICES

Appendix A – PROJECT SPECIFICATIONS

Appendix B – DETAILED PROJECT SCHEDULE

Appendix C – PROJECT DRAWINGS

Appendix D - PROJECT PROCEDURES - Tank Cleaning & Decontamination

Appendix E - PROJECT PROCEDURES - Non-Destructive Testing (NDE)

Appendix F - PROJECT PROCEDURES – Repair Construction / QC / Welding

Appendix G – PERSONNEL RESUMES AND CERTIFICATIONS

Appendix H – LEAD ABATEMENT WORK & SAFETY PLANS (NOT UTILIZED)

Appendix I – COATING & PAINT APPLICATIONS AND REPAIR PLANS

Appendix J – ASBESTOS ABATEMENT WORK & SAFETY PLANS (NOT UTILIZED)

Appendix K – JP5 EMERGENCY PIPELINE REPAIR PLANS (NOT UTILIZED)

Appendix L – TK5 WARRANTY REPAIR PLANS

Appendix M – TK5 POTENTIAL FREE PRODUCT RECLAMATION PROCEDURE

Distribution is limited to US Government agencies and their contractors; administrative/operational use within the context of this project. Other request shall be referred to the Naval Facilities Engineering Service Center.

LIST OF ACRONYMS AN ABBREVIATIONS

API	American Petroleum Institute
ASME-BPV	American Society of Mechanical Engineers – Boiler & Pressure Vessel Code
ASNT	American Society of Non-Destructive Testing
AWS	American Welding Society
BMP	Best Management Practice
CO	Commanding Officer
CP	Cathodic Protection
DA	Department of the Army
DBB	Double Block and Bleed Valve
DO	Delivery Order
DOT	Department of Transportation
EPP	Environmental Protection Plan
EXWC	Expeditionary Warfare Center
FFD	Federal Fire Department –
Naval F-76	Diesel Fuel Marine
FHWA	Federal Highway Administration
FISC	Fleet and Industrial Supply Center
FLC	Fleet Logistics Center
FLD	Field Operating Procedure
FORFAC	Fuel Oil Reclamation Facility – NAVSTA Pearl Harbor
FSO	Field Safety Officer
HASP	Health and Safety Plan
HPV	High Point Vent
JBPHH	Joint Base Pearl Harbor Hickam
JP-5	Jet Propellant Grade 5
JP-8	Jet Propellant Grade 8
KO	Contracting Officer
LOTO	Lockout Tagout
LPD	Low Point Drain
NAVFAC	Naval Facilities Engineering Command
NFESC	Naval Facilities Engineering Service Center
NAVSTA	Naval Station
NDE	Non-Destructive Examination
NPDES	National Pollution Discharge Elimination System
NTR	Navy Technical Representative
PM	Project Manager
POC	Point of Contact
PPE	Personal Protective Equipment
QA	Quality Assurance
QC	Quality Control
APP	Site Specific Health & Environmental Plan
SM	Site Manager
SOW	Statement or Scope of Work
TO	Task Order
USACE	U.S. Army Corp of Engineers
USN	U.S. Navy
UST	Underground Storage Tank
VS	Valve Station
WDP	Waste Disposal Plan
WP	Work Plan

Distribution is limited to US Government agencies and their contractors; administrative/operational use within the context of this project. Other request shall be referred to the Naval Facilities Engineering Service Center.

REDHILL COMPLEX PROJECT - 54118
TANK 5 REPAIRS – WARRANTY WORK PLAN

1.0 PROJECT SCOPE OF WORK AND PROCEDURES

The work to be performed under this Warranty Work Plan (WP) shall be limited to cleaning and inspection of the areas previously repaired by Willbros Government Services, LLC (Willbros) in Red Hill TK 5 and warranty repairs to any areas deemed necessary in accordance with the Naval Facilities Engineering Command Engineering and Expeditionary Warfare Center (NAVFAC EXWC) Statement of Work (SOW) dated 13 Jan 2010 and Contract Repair Modification (CRM) 09 dated 15 Dec 2011.

1.1 INTRODUCTION

Under contract agreement (Contract No. N62583-09-D-0132/ Task Order (TO) 0003 with NAVFAC EXWC, Willbros has prepared this Warranty Work Plan for TK 5 at Pearl Harbor Red Hill Complex, Fleet Logistics Center (FLC), Pearl Harbor, Hawaii.

The WP shall be utilized in conjunction with the previously approved project Accident Prevention Plan (APP), Health and Safety Plan (HASP), Environmental Protection Plan (EPP) and Waste Disposal Plan (WDP). The WP outlines the project activities in accordance with the NAVFAC EXWC SOW dated 13 Jan 2010 and CRM 09 dated 15 Dec 2011.

1.2 BACKGROUND AND OBJECTIVES

The project site is located on the Pearl Harbor Naval Base, Redhill Complex on Oahu, HI. The Redhill Tank Complex provides strategic fuel supply to the USN Pacific Fleet. The Redhill Complex contains twenty (20) UST tanks, 100 ft. dia. X 250 ft. high and ancillary equipment. The complex was originally built beginning in December 1940 and construction was completed in September 1943.

The project objective under this work plan is to provide cleaning, inspection of the repaired areas and warranty repairs for Tank 5. The SOW limits for the Warranty Work Plan includes only the repairs performed under the contract modification for TK5 and to the first flange connection from the tank to the first isolation valve. This is in reference to the original scope of work that is defined in the NAVFAC TO SOW document and included contract modification for tank repairs described in the following portions of this work plan.

The Warranty SOW for TK5 under this Work Plan is limited to perform the required LOTO to isolate the tank; clean the tank for personnel access; perform Non Destructive Examination (NDE) and visual inspection of the repaired areas on the tank for defective workmanship or repairs and perform any necessary repairs on any identified areas of defective workmanship performed under the original SOW or contract modifications. Perform pressure testing of new or modified piping systems within the tank limits from internal to exterior connections. A general overview visual inspection will be performed on the tank surfaces to look for obvious areas of concern or failure outside of the areas to be inspected for the original repair work completed. Any warranty repairs performed will be performed in accordance with the same requirements under the original TO or contract modification SOW.

Noticeable areas identified which are outside of the original or contract modification SOW will be identified and reported to NAVFAC for directions on how to further proceed. All items which are outside of the original or contract modification SOW will be executed by a contract modification.

Distribution is limited to US Government agencies and their contractors; administrative/operational use within the context of this project. Other request shall be referred to the Naval Facilities Engineering Service Center.

1.3 WORK PLAN IMPLEMENTATION

All site activities will be performed in accordance with this WP, Willbros policies and procedures, applicable federal and local standards, and specified NAVFAC EXWC requirements. In the event that the aforementioned regulations conflict, the most stringent standards will be met. Supporting this WP is the previously approved APP, HASP, EPP and WDP, submitted under separate cover. All Willbros and subcontractor personnel involved in this project shall review and understand these documents prior to the start of work. The draft and final versions of this WP will be submitted for review and approval.

Willbros will identify the requirements for all personnel entering or working on the project site and accessing the tank areas. All personnel will be required to provide relevant training documentation as required for access or relevant work activities. This includes all Willbros, subcontractors, government or their representatives.

1.4 PROJECT SPECIFICATIONS

The project specifications listed in Appendix A are compiled from the NAVFAC SOW and contract modification 09 documents. These project specifications will be implemented in the development, design and execution of the project work plan. The project will also insure compliance with all local, state and federal regulations and Willbros standard policies and procedures.

1.5 REQUIRED PERMITS

Willbros will obtain hot work permits for any hot work task or activities on the storage tank as needed. A Marine Chemist will be employed to certify the site condition is gas free and ready for hot work after all LOTO has been performed and any required cleaning is complete. Willbros will then coordinate with Federal Fire to obtain a hot work permit. Willbros will continue to monitor the environment conditions to ensure the atmospheric conditions are free of known toxins or safe levels (ppm or LEL) of gas concentrations.

Willbros will initiate confined space permits as needed to perform the SOW task or activities per our policies and procedures. A Marine Chemist will be employed to certify the site condition is gas free and ready for hot work after all LOTO has been performed and any required cleaning is complete.

No environmental or other permits are required.

Distribution is limited to US Government agencies and their contractors; administrative/operational use within the context of this project. Other request shall be referred to the Naval Facilities Engineering Service Center.

2.0 PROJECT SCHEDULE AND CONTROLS

2.1 PROJECT SCHEDULE

The project schedule for the Warranty Work is initially provided in Appendix B, the schedule illustrates the projected timelines for the major definable project tasks, from project preparation through project closeout. These tasks only allow for task contracted under this TO and does not include anticipated or estimated repairs, coatings or other activities. As additional task(s), repairs, coatings or other activities are added to the TO; the project schedule will be changed to reflect the additional time required for the added task or activities. See APPENDIX L for a description of the warranty work to be performed as outlined in the schedule.

All relevant schedule updates and changes will be submitted under a separate submittal or individually.

2.2 CRITICAL PATH

Willbros has identified all relevant schedule risk item(s) below which has a significant probability of adversely affecting the project work schedule. The Willbros project management and controls team will monitor and update the schedule regularly; to evaluate and anticipate any realistic potential problems and to have plans in place to maintain our work schedule. The Critical Path will be integrated and shown on the overall project schedule.

Critical Path Items -

- *Access thru ADIT 3, 4 and 5 must be readily accessible*
- *Train must be available to move equipment, supplies or components per Modification 09 SOW 4.1.1 (f)*
- *Access to the freight elevator*
- *Government Partial Plan Approvals – This will need to be clearly communicated and continued efforts to complete all plan approvals to prevent stand by or downtime and maintain a continuous flow of work activities*
- *Government Hold Points – This is included in APPENDIX L and will need to be clearly communicated to prevent stand by or downtime and maintain a continuous flow of work activities*
- *Government Review and Approval to proceed for repairs or path forward direction – This will need to be clearly communicated to prevent stand by or downtime and maintain a continuous flow of work activities*

Distribution is limited to US Government agencies and their contractors; administrative/operational use within the context of this project. Other request shall be referred to the Naval Facilities Engineering Service Center.

3.0 RESPONSIBILITIES OF PARTIES

All personnel entering the project site are subject to the requirements of this WP and supporting plans. The following subsections will provide the chain of command for this project. The Site Manager (SM) and the Site Safety & Health Officer (SSHO) will be responsible for the oversight of all site activities, field personnel and subcontractors. Table 3-1 provides a list of key personnel and participants, including relevant project contacts between Willbros and NAVFAC EXWC personnel.

Title	Name	Organization	Phone Number
Contracting Officer	[redacted]	NAVFAC / SCAN	(805) 982-2515
Contracting Officer Representative	[redacted]	NAVFAC HI	(808) 474-3220 [redacted]
Project Manager	[redacted]	NAVFAC EXWC	(805) 982-2149
Construction Surveillance Engineer	[redacted]	NAVFAC HI Contractor	(808) 474-3220 [redacted]
Construction Surveillance Engineer Technician	[redacted]	NAVFAC HI Contractor	(808) 474-3320 [redacted]
Willbros Project Manager Alt. QCM/SM	James Hagen	Willbros Government Services, LLC	(808) 738-6396
Willbros Project Engineer	Andrew J. Parsons	Willbros Government Services, LLC	(918) 481-4175
Willbros Site Manager Alt. SSHO	John Sebok	Willbros Government Services, LLC	(808) 352-0528
Willbros Site Health & Safety Officer	Jaymes Barlos	Willbros Government Services LLC	(808) 352-0528
Willbros QC Manager/API 653	Matt Halderman	Willbros Government Services, LLC	(918) 556-3603
Willbros Program Manager	Rick Grossman	Willbros Government Services, LLC	(918) 499-2870
Willbros Corp Safety Director	Rich Donaldson	Willbros	(225) 932-6097 D / (225) 803-6083 C

Table 3-1 Project Organization

3.1 PROGRAM MANAGER

Mr. Rick Grossman is the Program Manager for all NAVFAC Program TO's / DO's. Mr. Grossman is responsible for ensuring that Willbros executes all TO's / DO's efficiently, expediently, and with the highest degree of competency.

Willbros Program Manager will support the Project Manager (PM) with regard to purchasing, soliciting of vendors, evaluation of bids including consent packages, property management, and any environmental compliance and health/safety issues.

3.2 PROGRAM HEALTH AND SAFETY OFFICER

The Program Health and Safety Officer for this project is Mr. Rick Donaldson, the Senior Safety Personnel for the NAVFAC Fuels Program in Willbros (WGS). The Program Health and Safety Officer is also the Willbros Corporate Safety Director.

The Program Health and Safety Manager will have the following responsibilities:

- Ensure that the HASP complies with all federal and local health and safety requirements. If necessary, modify specific aspects of the APP and HASP to adjust for on-site changes that affect safety.
- Evaluate and authorize any changes to the APP and HASP.
- Implement and provide oversight of the Environmental Compliance and Health & Safety Program.
- Assist in acting as liaison with government officials regarding health and safety-related site matters.
- Maintain frequent communication with the SM regarding site activities and implementation of the APP and HASP.
- Assist in training site personnel in the site-specific hazards.
- Ensure site and project personnel are in compliance with the Willbros Safety Program.

3.3 PROJECT MANAGER

James Hagen has over 15 years of experience in the POL industry and 2 yrs at Red Hill. James is very knowledgeable of the Red Hill facility, client and execution of the work. James has gained valuable experience over the years working in all aspects of POL construction.

The project manager will fill in as a backup for the site manager when he will be gone for extended periods (1 wk or more) off the site for vacation or sick leave.

3.4 PROJECT ENGINEER

Mr. Andrew J. Parsons will serve as the Project Engineer for all NAVFAC Program TO's at RED HILL. Mr. Parsons will be responsible for all engineering elements required to execute the projects and he will be on-site during project execution often enough to diagnose, investigate, and analyze any and all technical issues requested by the government.

Distribution is limited to US Government agencies and their contractors; administrative/operational use within the context of this project. Other request shall be referred to the Naval Facilities Engineering Service Center.

3.5 SITE MANAGER

John Sebok has over 11 years of construction experience and 6 in the POL field and has previously held the Site Manager (SM) for the project. John Sebok will report directly to the PM for daily site activities. The SM is responsible for supervising and managing the site & field execution of the project. The SM will provide direct day-to-day supervision of field personnel and subcontractors, and will render site management decisions relevant to project execution and safety.

For situations where the SM is required to leave the site or sick for short durations, the Site Supervisor and / or SSHO will cover for the SM during his absence. In circumstances where the designated SM will be absent for a relevant period of time, such as vacation; the listed back up SM or PM will be present during their absence.

3.6 SITE SAFETY & HEALTH OFFICER (SSHO)

James Barlos is the Site Safety & Health Officer (SSHO) for the project. The SSHO is responsible for ensuring that all personnel adhere to the requirements of the Willbros Health and Safety Program (HASP) and the project Accident Prevention Plan (APP).

The SSHO has the following responsibilities:

- "STOP WORK" authority for health and safety reasons.
- Implement and enforce the APP and HASP.
- Conduct daily safety briefings.
- Ensure that all project personnel follow the requirements of the APP and HASP.
- Train employees in site-specific hazards.
- Ensure Competent Personnel (Confined Space, Scaffolding, Air Monitoring, Etc.) training is current and identified for use in the required appropriate activities.
- Specify proper levels of Personal Protective Equipment (PPE) according to the specifications of the APP, HASP, project plans and regulations.
- Develop additional health and safety procedures, as required.
- Investigate accidents/incidents and "near misses".
- Conduct visitor orientation.
- Conduct necessary safety audits and complete required documentation.
- Coordinate with Division Health and Safety Manager concerning monitoring and PPE.
- Conduct air monitoring as necessary.

For situations where the SSHO is required to leave the site or sick for short durations, the SM will cover for the SSHO during his absence. In circumstances where the designated SSHO will be absent for a relevant period of time, such as vacation; the listed back up SSHO will be present during their absence.

Distribution is limited to US Government agencies and their contractors; administrative/operational use within the context of this project. Other request shall be referred to the Naval Facilities Engineering Service Center.

3.7 SUBCONTRACTORS

Table 3-2 shows the proposed subcontractors to be contracted for this project and their associated project site work tasks or activities as they relate to current project. Some additional subcontractors have been listed for additional support as needed or as a contingency; additional ones will be used as needed.

Table 3-2 Subcontractor Organizations and Associated Project Task

Subcontractor	ROLE / RESPONSIBILITY
Marine Chemist Hawaii	Marine Chemist services as needed for additional project support.
Pacific Island	Perform NDE testing of the tank and components
ASI	Perform NDE testing of the tank and components
Engineering & Inspection of Hawaii	NDE testing and inspections as needed for additional project support
Pacific Commercial Services	Cleaning and disposal services as needed for additional project support. Equipment rental as needed for additional project support
Hawaii Marine	Cleaning and disposal services as needed for additional project support
Hawaiian Pumping	Cleaning and disposal services as needed for additional project support
Gauge Point Calibrations	Tank Calibrations and strapping as needed for project support.
Chemitrol	Portable Toilets – Supply, Service & Maintenance
Fuelman or others	Equipment Fuel Supply
Mr. Sandman	Equipment rental as needed for additional project support.
FKS	Equipment rental as needed for additional project support.
Hawaiian Rent All	Equipment rental as needed for additional project support.
Rolloffs Hawaii	Site trash containers.
Valve Service & Supply	Materials supply and service as needed for project support.
Pacific Consultant Construct	Mechanical repairs as needed for additional project support.
Latigo Construction	Mechanical repairs as needed for additional project support.
Abhe Svoboda	Coating lead abatement & coating repairs
CSI Inspection	NACE Level III Coating Inspection

3.8 CHANGE MANAGEMENT

Recognizing that project success and quality are common goals of all project stakeholders, change management during various phases of the project is very important. The project may undergo changes during the course of the work depending on field conditions and unforeseen circumstances. NAVFAC EXWC and the Base, Facilities or Site point of contact (POC) have the responsibility to evaluate the project requirements during and/or upon the site assessment, as well as to identify/add any necessary scope detail. Typically, changes in project scope can be handled most efficiently early on in the process, (i.e. during the concept development and planning stage). Proper communication and mitigation of potential changes prior to the implementation of project execution activities will provide a significant cost savings; also reduce the likelihood of costly changes or schedule impacts to the project after the WP has been approved and the construction activities have begun. It is anticipated that changes in conditions may occur in the field. Change management procedures will include documentation and timely notifications of changes. As required, scope and potential cost changes will be communicated to the Contracting Officer (KO) through the NAVFAC EXWC NTR. The documentation provided will include justification of changes, requests for compensation (as appropriate), and an estimate of schedule and cost impacts.

Distribution is limited to US Government agencies and their contractors; administrative/operational use within the context of this project. Other request shall be referred to the Naval Facilities Engineering Service Center.

4.0 PROJECT EXECUTION STRATEGY

Site work and operating plans associated with this project are described in the following sections and associated appendices. The work will be conducted in compliance with the contract documents, project drawings and specifications, and applicable guidance documents and regulations. The project specifications, drawings and procedures are included in relevant Appendices respectively.

4.1 MOBILIZATION AND SITE PREPARATION PLAN

The SM, subcontractors, materials, and equipment will be mobilized to the tank area in accordance with the project schedule. During mobilization, Willbros will establish work zones, installation of barriers, posting of signage, and permit coordination (as necessary). Equipment and materials will be mobilized to the site on an as-needed basis to avoid multiple handling, storage, and transportation costs. An equipment storage/staging area is required when field operations commence. Willbros plans to utilize the existing area at the ADIT Tunnel openings as indicated on Drawing 01-006. A sketch of the area and approval of the area usage is included in Appendix C. This area will be used for trucks, equipment, material storage, and serve as an assembly, staging and fabrication area. Prior to staging any required materials or equipment within the storage/staging area, the Willbros team will install necessary Best Management Practices (BMP) for storm water management as applicable and noted in Willbros Drawings and EPP. BMP's will be removed at the completion of construction. Coordination between Willbros, our subcontractors, NAVFAC EXWC and FLC personnel will occur on a daily basis to allow the work to be completed on time and with as little interruption to facility operations as possible. Willbros will hold a pre-construction meeting prior to the first mobilization to implement site security, health and safety procedures and environmental controls.

4.1.1 TRAFFIC CONTROL PLAN

Willbros has identified that materials, equipment and transports will utilize local, county and state roads and highways. No current shipment will require permits, special handling or interfere with the vehicular traffic in the area. Prior to the start of any activities that would occur in the vehicle thoroughfare, a traffic control plan will be submitted for review and approval to safely modify the traffic pattern during construction. The traffic control plan and devices used will be in accordance with the Federal Highway Administration's (FHWA) Manual on Uniform Traffic Control Devices (MUTCD).

4.2 CONFINED SPACE

Confined space is defined as any space having: (1) a limited or restricted means of entry or exit, (2) space large enough and so configured that an employee can bodily enter and perform assigned activities, and (3) conditions not designed for continuous employee occupancy. Willbros HASP, Confined Space Program and Procedures and EM 385-1-1 will be adhered to for any work identified as a confined space. Prior to entry activities into a permit required confined space, the confined space competent person appointed in the APP shall identify and label the confined space and complete a Confined Space Entry Permit (located in appropriate section of the HASP). Additionally, the SM or HSO will communicate with the Federal Fire Department (FFD) about confined space entry schedules and notify them specifically for changes to the entry schedule. The FFD will be the responsible party for rescues, should workers become entrapped or seriously injured and site personnel cannot evacuate them. Willbros will maintain a daily permit requirement for all permit required confined spaces (PRCS) on the project. If a PRCS can be positively isolated and all relevant atmospheric or energy hazards removed the PRCS may be designated as a non-permit confined space (NPCS). Willbros will continue monitoring the atmospheric conditions of all NPCS to ensure no hazardous changes occur due to upsets in adjacent equipment or systems.

Distribution is limited to US Government agencies and their contractors; administrative/operational use within the context of this project. Other request shall be referred to the Naval Facilities Engineering Service Center.

4.3 HOT WORK

Hot work will potentially be required to complete any identified warranty repair. Hot work is defined as any task producing heat, sparks or energy sufficient to serve as an ignition source at a work site that potentially has an ignitable atmosphere. Examples include welding, cutting, grinding, use of power tools that produce sparks, sand blasting, and use of internal combustion engines. Willbros will obtain a Hot Work Permit from the FFD for work that will be performed on the fuel storage tanks, piping or pipeline systems. The SM or HSO will communicate with the FFD about hot work schedules and notify them about any changes. The SM or HSO will designate a Fire Watch for each hot work operation. The Fire Watch will remain in clear view of the hot work at all times and close enough to provide emergency assistance if needed. A Marine Chemist will certify the area is suitable for hot work operations and assist in the Hot Work Permit application. Fire extinguishers will be located in the immediate vicinity of the hot work being performed. The extinguishers will be routinely inspected for operability prior to commencing work. Facility fire suppression system location and operations will be briefed to all work crew personnel prior to initiation of work.

4.4 TRANSPORTATION OF MATERIALS AND EQUIPMENT PLAN

Willbros and its subcontractors will be responsible for transporting equipment, materials, and waste materials on and off the site. Willbros will subcontract with local, licensed and authorized firms to transport any waste materials from the site, if necessary, for off-site treatment, storage, and/or disposal. The SM will also verify that each load of waste material is accompanied by a manifest and procedures outlined in the WDP are followed (as required). Additionally, Willbros SM or designate shall inspect all construction vehicles prior to leaving the project site to ensure that minimal soil adheres to wheels and undercarriages.

Willbros will need to utilize the FLC train and freight elevator located in the tunnel system to move equipment, materials, tools, drums and / or totes to and from the work areas. Willbros will provide a notice or request within 48hrs of the intended timeline for use.

4.5 PROJECT TASK AND SEQUENCES

The tank's product will be transferred by FLC personnel to the lowest level possible as described in the SOW. Our site management and project team will transfer, handle and dispose of the residual product and sludge as described in the SOW. This will be coordinated with NAVFAC site and FLC facility personnel. These activities will utilize proper PPE, equipment and safety procedures to provide a safe working environment.

WGS will transfer all residual re-useable spec products from the specified tank to a temporary drum, tote or adjacent tank in the local area. The residual spec product will be transferred from the tank or temporary container to another adjacent or nearby tank or piping system product header connection to recapture the product and eliminate waste. Willbros will use a pneumatic diaphragm pump and temporary hoses as needed to transfer the residual product in the local area or range of up to 200ft.

Once the product reaches a low level and the product appears to be contaminated with rust or debris, the product will be transferred thru a filter system to remove any remaining debris or particles to a relevant size. Any residual off spec fuel or product which can't be transferred and recaptured as useable fuel will be transferred thru the tunnel drain system to ADIT 3 where it will be sent to FORFAC for processing. All residual off spec fuels that will be sent to FORFAC will be required to meet the FORFAC fuel specifications. NAVFAC EXWC or FLC will provide Willbros with the FORFAC specifications prior to the start of these activities.

Distribution is limited to US Government agencies and their contractors; administrative/operational use within the context of this project. Other request shall be referred to the Naval Facilities Engineering Service Center.

Any remaining product, sludge or debris which is not of an acceptable quality for recapturing or to be recovered by FORFAC will be filled in DOT approved 55 gal. drums or totes. These drums and /or totes will be transported by the tunnel train system to ADIT 3 where it will be stored in a Frac tank or temporary storage tank(s). All Frac tanks or temporary tanks will be installed on site in a double wall construction or have secondary containment equal to 100% of the designed or designated containment. All residual waste products will be sampled and provided to a local lab on island for testing to provide relevant product data for the designation of product characteristics and disposal methods. Upon receiving the lab results Willbros or subcontractor will complete the transportation manifest and Willbros will submit the manifest to the NAVFAC HI Environmental Group for review and approvals. After Willbros receives an approved and signed manifest by NAVFAC HI Environmental Group, Willbros will initiate the disposal process.

Any residual product, sludge or debris will be placed in a DOT approved 55 gallon shipping drum / barrel, tote or approved transport truck for shipping and disposal at an approved disposal site(s). The barrels, totes or transports will have the required chain of custody and shipping documentation for transfer to the local disposal site or return shipment during de-mobilization for remote site locations. The barrels or totes will be shipped to an approved disposal site and disposed of in accordance with proper hazardous or waste disposal procedures. All waste fuels, sludge and debris that are considered to be non-hazardous or regulated waste will be disposed of at a proper disposal site. All hazardous waste, products or materials will be handled by NAVFAC, FLC or a contract modification.

After the remaining residual products have been transferred or processed for disposal, Willbros will begin the tank entry preparation, Lock Out Tag Out (LOTO) tank isolation, internal preparations to support activities, cleaning for personnel entry, continue waste disposal of any remaining residual product on the floor, inspection of tank and appurtenances repairs, non-destructive testing as required, visual inspection of all repaired areas to identify areas of concern or defective workmanship, update tank suitability for service reports and returning tanks to operational readiness.

Tank 5 repair areas will be inspected and any area identified as defective workmanship from the original or contract modification SOW will be repaired under the warranty SOW and plan. All warranty or additional repairs will be reviewed and approved by the government. Any additional areas or items that are identified which are outside of the original or contract modification SOW, modifications or alterations will be reviewed and evaluated by NAVFAC. Any additional repairs or modifications which are outside of the original or contract modification SOW will be executed by change orders or contract modification.

The following section lists the proposed chronological sequence and major tasks required to complete the project SOW for this task order. Some of these tasks and sequences may slightly change in sequence or order due to parallel activities, early completions or access without causing conflicts of activities. The next section contains the project SOW and relevant details for this task order.

Project planning, coordination and scheduling are the cornerstones of project execution. Project delivery in tasks as simple or complex as those we expect in this contract requires effective communication and execution of project task; disciplined and defined schedule, project goals and milestones to ensure the proper coordination of all elements needed to meet or exceed the customer needs. The list of major tasks is detailed below. See Appendix C for Project Execution Plan Drawing.

Willbros has combined the project requirements and our project management expertise to plan the scope of work in the most efficient manner.

Distribution is limited to US Government agencies and their contractors; administrative/operational use within the context of this project. Other request shall be referred to the Naval Facilities Engineering Service Center.

Below is a proposed chronological sequence of tasks to be performed to ensure timely, accurate completion of the task order requirements: (adjustments will be made as necessary to maintain continuous activities)

- Issue final Warranty Work Plan and Procedures. (WGS Project Team) *Completed*
- NAVFAC Reviews and Approves Work Plan and Procedures. (NAVFAC) *In Process*
- **HOLD POINT - RECEIVE NOTIFICATION OF APPROVED WARRANTY WORK PLAN AND NTP**
- Conduct site visit and define SOW access and tie in points. (WGS Project Manager) *Completed*
- Revise final Warranty Work Plan and Procedures. (WGS Project Team) *Pending NAVFAC Approval*
- Engineering – Define materials, equipment and supplies (WGS Project Engineer) *Completed*
- Procurement - Procure all materials, equipment or supplies (WGS Procurement) *In Process*
- Ship all materials, equipment or supplies to site. (WGS Logistics) *In Process*
  - Receive all materials, equipment or supplies *In Process*
  - Mobilize site manager to begin site orientation and develop communication with proper NTR and site personnel. Mobilize Site Manager to arrive prior to cleaning, inspection and construction support team arrival. Site Manager will perform recognizance of the area so that the rest of the team will be up to speed upon arrival. (WGS Project & Site Manager) *Completed*
  - Mobilize Inspection and Support Team.(WGS Site Manager Crew & Subs) *Pending NTP*
  - Perform Site Orientation with Site Manager and NAVFAC Field Representative. Perform required notifications. Obtain equipment from the port and perform inventory and inspection. (WGS Site Manager) *Completed*
  - Hold kick-off meeting and perform the required safety requirements. (WGS Site Manager)

- **Tank # 5 100 ft Dia. X 250 ft H – Red Hill Complex**

  The following steps or activities are an outline of the required activities in a logical sequence of events. The activities which are not dependent on each other may be performed in order, parallel with other activities or a sequence switched if one activity progresses and the predecessor activity is completed early. No steps or sequences will be switched or started early if there are relevant sequencing required.

  - Mobilize to tank area and prep for work activities (WGS Site Manager) *Partially complete*
    - Identify staging and storage area *Completed*
    - Meet with the NTR and site POC to discuss project SOW *In Process*
    - Meet with the NTR and site POC to discuss temp. equipment locations *Completed*
    - Meet with the NTR and site POC to discuss temp. power locations *Completed*
    - Set up equipment, containers and materials *Completed*
    - Install and verify tunnel communications *Completed*

  - Prep tanks including LOTO, install temporary blinds (WGS) *Completed*
    - Install safety barricades
    - Drain or pump residual spec product into adjacent tank, pipeline or drain system
    - Install temporary piping, hoses and/or equipment to transfer residual off spec fuel to drain line for FORFAC recovery
    - Use temporary piping, hoses and/or equipment to transfer residual waste fuel, products, debris and rinsate into drums and totes for transfer to ADIT 3 temporary tank system
    - Install shoring and lifting devices as needed to remove spools and install blinds
    - Drain remaining residual product
    - Install temporary isolation blinds
    - LOTO

Distribution is limited to US Government agencies and their contractors; administrative/operational use within the context of this project. Other request shall be referred to the Naval Facilities Engineering Service Center.

- Access the vent spool (WGS) *Completed*
    - Install safety barricades
    - Remove spool and tie into vent line
    - Initiate & test system - walk line down to ensure no leaks are present
    - Install safety barricades at exterior vent location where gas is dispersing
- Install temporary ventilation and ducting (WGS) *Completed*
    - Install safety barricades
    - Install temporary electrical power distribution panel and connect to the Gov't supplied power (WGS Electrical Technician or local electrician)
        - Refer to One Line & Loading Table in APP
        - All initial electrical loads will be in the upper tunnel
    - Install temporary wiring for power operations
    - Install ventilation blower, connect power and test operational readiness
    - Connect temporary ducting to the existing vent system for ventilation
- Ventilate tank (WGS) *Completed*
    - Verify safety perimeter for any area for potential gas vapors
    - Check valve alignment and equipment operations
    - Determine and install relevant safety barricades and signs
    - Initiate blower for ventilation
- Remove Manways and items for access (WGS) *Completed*
    - Install safety barricades
    - Loosen bolts and remove manway
- Remove bottom motorized skin valves for tank access and safety (WGS) *Completed*
    - Install safety barricades
    - LOTO, electrical power and mechanical connections (Electrician)
    - Loosen bolts
    - Install shoring or supports as needed to lift and lower the motorized valves.
    - Stage valves in non-traffic area
    - Protect gasket surfaces and electrical connections

- Install temporary explosion proof lighting (WGS) *Completed*
    - Perform confined space entry procedure, gas test (Safety)
    - Confirm environmental conditions and select proper PPE (personnel protective equipment)
    - As specified in the confined space permit, utilize proper PPE and install temporary explosion proof electrical lighting. Lighting utilized will conform to the appropriate atmospheric conditions and vapors.
- Inspect catwalk & tower structure for any changed conditions (WGS SM) *Completed*
    - Confirm conditions of the confined space permit and utilize proper PPE.
    - Perform inspection of catwalk and handrails for any signs of change or damage
    - Any changes or damage will be reported to the structural engineer for review and evaluation
    - Identify any deficiencies and provide list and recommendations to NAVFAC.
    - Make repairs as directed by NAVFAC authorized personnel and properly executed change order.

Distribution is limited to US Government agencies and their contractors; administrative/operational use within the context of this project. Other request shall be referred to the Naval Facilities Engineering Service Center.

- Install Suspended Scaffolding Systems – (2) Systems (WGS Competent Person) *Completed*
    - Install safety barricades
    - Stage Suspended Scaffolding Systems
    - Install working scaffold to tower for Suspended Scaffolding Systems Install temporary lifting devices to set Suspended Scaffolding to tower structure.
    - Install Suspended Scaffolding Systems
    - Install and bolt to the tower structure
    - Install controls; system, performance and load test

Note: No tank cleaning activities were required for the Warranty portion of this TO

- Install tank cleaning system and temporary piping, transfer and storage system (WGS)
    - Install safety barricades
    - Install temporary wash solution tank
    - Install temporary rinsate return tank
    - Install temporary Frac Tank or storage system
    - Install temporary hoses, piping from tank to Frac tank system
    - Install cleaning pressure wash system
    - Test cleaning system
- Clean tanks (WGS)
    - Install safety barricades
    - Obtain confined space entry, select PPE based on conditions
    - Pressure wash with (2) crews from man baskets on the Suspended Scaffolding Systems as needed or required to obtain Gas Free Certificate
    - Wash residual product and sludge into rinsate and return system, transfer waste from the rinsate tank through the tunnel slop lines to the central slop line sump, transfer and pump the waste to the Frac tank located near the upper access tunnel in the contractor staging area.
    - Transfer waste product and sludge to disposal site via a vacuum truck.
    - Complete tank cleaning
    - Obtain certification from Marine chemist / CIH
    - Breakdown, remove equipment from tank

- Pressure test lower tank nozzle piping – TK shell limit to first flange (WGS) *Completed*
    - Install pressure testing equipment
    - Install safety barricades
    - Pressure test piping spools from header to tank
    - Complete test and documentation
    - Breakdown test set up and remove from tank

- Perform non-destructive testing on tank components (WGS/Subcontractor)
    - Obtain confined space entry, select PPE based on conditions
    - NDT testing with (1 to 2) crews from man baskets
    - NDT Vacuum Box all previously repaired areas
    - Issue preliminary reports

Distribution is limited to US Government agencies and their contractors; administrative/operational use within the context of this project. Other request shall be referred to the Naval Facilities Engineering Service Center.

- Visually Inspect tank areas repaired for concerns or defective workmanship (WGS Subcontractor)
  - Install access equipment and operational test for API653 visual inspection
  - Obtain confined space entry, select PPE based on conditions
  - API653 visual inspection from man baskets on the Suspended Scaffolding Systems. Identify areas of potential concern (proof NDT testing of concern areas as needed)
  - Breakdown, remove equipment from tank
  - Preliminary and final reports

- Submit final repair locations and limits of repair findings / reports (WGS Site Manager to NTR)
  - **HOLD POINT FOR GOVERNMENT REVIEW AND APPROVAL**

- Willbros will make repair recommendations to any area identified as defective workmanship on performed repairs under the original or contract modification SOW. NAVAFC EXWC and the government will review and approve in a timely manner to maintain work activities.

- Tank repairs – for TK5
  - Warranty Repairs – only for areas identified as defective workmanship for repairs performed under the original or contract modification SOW
  - Additional Areas - as approved by NAVFAC change order or contract modification.
  - Issue a new 653 inspection report and Suitability for Service Statement (WGS Project Team)
  - **HOLD POINT FOR GOVERNMENT REVIEW AND APPROVAL**

- Install bottom motorized skin valves (WGS)
  - Set up safety barricades
  - LOTO, electrical power and mechanical connections (Electrician)
  - Install shoring or supports as needed to lift and install the motorized valves.
  - Protect gasket surfaces and electrical connections
  - Install bolting utilizing proper torqueing procedures

- Remove temporary ducting and blinds (WGS)
  - Set up safety barricades
  - Set up shoring and lifting devices as needed to remove blinds
  - Remove temporary piping, hoses and/or equipment as for the cleaning system temporary tanks.
  - Install piping spools removed for LOTO and access
  - Remove LOTO

- Return Tank control back to Facility Operations (WGS Site Manager)

➢ Prepare final documentation per project requirements.

Following the completion of the on-site work, the documentation book will be provided including all reports, inspection results, and other documentation.

Note: No tank cleaning activities were required for the Warranty portion of this TO

Distribution is limited to US Government agencies and their contractors; administrative/operational use within the context of this project. Other request shall be referred to the Naval Facilities Engineering Service Center.

4.5.1 TANK AND PIPE CLEANING

The storage tanks will be cleaned utilizing the following procedure. Our site manager will coordinate with the cleaning crew to perform all of the tank cleaning, temporary storage, transfer and disposal. Willbros will perform these activities for this project. Willbros cleaning crew personnel has performed similar activities on other Red Hill Complex and Pearl Harbor projects. The tank cleaning procedures and approach incorporates the requirements specified in OSHA- 29 CFR 1910, API-2015 and API-2016.

A comprehensive Health and Safety Plan (HASP) has been outlined and developed for the Red Hill Complex Project. The HASP plan carefully monitors the safety and condition of the tank, surrounding tunnel environments and area personnel to ensure a safe work place is maintained throughout all phases of the project and activities. This plan ensures the careful preparation, communication, coordination, controls and execution of all activities for this SOW and as applicable for surrounding activities.

The Site Manager and cleaning crew will meet for daily safety meetings to review the (AHA) Activity Hazard Analysis form, confined space entry permit, gas atmospheric testing and surrounding conditions. All immediate and surrounding concerns will be noted, monitored and evaluated throughout the day for potential changes. LOTO will be in place and verified to ensure there are not any improper releases of energy or gases into the surrounding environment. Continuous oxygen, gas LEL and environmental monitors will be utilized by Willbros personnel. Trained confined space attendants will be stationed for continuous monitoring of the working personnel and surrounding conditions.

Temporary isolation blinds will be installed at the tank or piping connections for LOTO and ducting interconnected for the initial ventilation of the tanks. The tanks or piping will utilize air movers as needed to maintain a safe working environment for the tank atmosphere and surrounding areas. The cleaning crew will utilize suspended scaffold system and man baskets for access to all elevated areas of the tank or piping for cleaning.

Temporary piping, hoses, drums, portable totes and Frac or temporary tanks will be staged in a closed loop system for liquids and sludge as it exits the tank. These liquids and sludge inspected, tested and determined how to process as previously described.

Note: All fuel removal under the warranty portion of this TO has been completed and cleaning activities were deleted from this TO per agreement between WGS and EXWC.

4.5.1.1 AIR MONITORING

Air monitoring must be performed on all sites in accordance with company and industry safety practices. Organic vapor concentrations are monitored in the field with a multi gas meter or a photo ionization detector (PID). Flammable vapor and/or gas are monitored with an oxygen/combustible meter real-time instrument, the instrument also measures for concentrations of CO (carbon monoxide) and H_2S (hydrogen sulfide).

Engineering controls such as the venturi air mover or pneumatic blower (supplied by compressed air) or motorized blower to exhaust or dilute vapors emanating from product or sludge in the tank will be utilized.

All work will comply with the Occupational Safety and Health Act (OSHA) standard, "Hazardous Waste. Operations and Emergency Response" (29 CFR 1910.120), and other federal, state, and local procedures that are included and implemented in Willbros (HS&E) Health, Safety & Environmental Plans. Generation and use of this document certifies that the workplace has been evaluated for the hazards as described. A hazard assessment will be performed and the adequacy of the personal protective equipment (PPE) will be selected and certified per 29 CFR 1910.132 (d) which is duly noted by the signature(s) and date appearing on the confined space entry form.

Distribution is limited to US Government agencies and their contractors; administrative/operational use within the context of this project. Other request shall be referred to the Naval Facilities Engineering Service Center.

4.5.1.2 COMMENCING THE UST CLEANING PROCESS - FUEL REMOVAL, WASTE HANDLING, PRESSURE WASHING, AND DISPOSAL

The Site Manager will notify the NAVFAC NTR, site representative and FLC a minimum of five working days in advance to ensure adequate time is available to transfer fuel before starting tank cleaning requirements. All on specification fuel (product) will be transferred to another tank of the same product by utilizing an air driven pump, a portable filter and either through installation's piping or contractor furnished hoses. After the transfer of all on specification fuel the remaining product and sludge will be removed to the base for disposal processing at an approved disposal site as specified in the SOW.

Rinsate from the tank cleaning process will be removed and disposed via the waste treatment plant or a specified disposal processing site as specified in the SOW. After all fuel, sludge and initial rinse has been removed and the LEL is below 10 % and the O_2 is above 19.5% the tank shall be entered with Level C- PPE and with forced ventilation.

A high pressure spray wash of the tank interior and internal components shall be conducted and all rinsate pumped out and transferred to waste treatment or a specified disposal processing site as specified in the SOW. After an LEL of < 1%, O_2 above 19.5%, no CO or H2S then continued tank cleaning can continue with Modified Level D – PPE.

4.5.1.3 CLEANING UNDERGROUND TANKS

Personnel entering underground tanks will be familiar with design elements that affect entry, identify confined or restricted spaces and cleaning activities. They will:

- Inspect and determine condition of the confined or restricted space, platform areas before workers ascend or descend onto it.
- Determine best method of safely entering a confined or restricted space, descending to the floor
- Determine best method of vapor freeing tank, including any confined or restricted spaces
- Determine if hydrocarbons are entrapped in confined or restricted space, piping or restricted areas
- Gas test complete open and restricted areas or spaces.

Note: All fuel removal under the warranty portion of this TO has been completed and cleaning activities were deleted from this TO per agreement between WGS and EXWC.

4.5.1.4 CONFINED SPACE SAFE ENTRY CERTIFICATION

After the cleaning process is completed the tank will be checked by a Marine Chemist or Certified Industrial Hygienist and certified "Gas Free" and safe for personnel entry. A copy of the certificate will be posted on the job site safety board and the original will be kept on file in the site office until the project is completed. The original will be included in the Final Project Report submitted to the government.

Distribution is limited to US Government agencies and their contractors; administrative/operational use within the context of this project. Other request shall be referred to the Naval Facilities Engineering Service Center.

4.5.2 TANK REPAIR INSPECTIONS – WARRANTY SOW LIMITED

The inspection of Red Hill Complex Tanks 5 repair areas shall be carried out according to the requirements of API Standard 653, Tank Inspection, Repair, Alteration and Reconstruction; and as supplemented by the Statement of Work dated 13 Jan 2010 and CRM 09 dated 15 Dec 2011.The inspections will be performed in a safe and professional manner; the inspection, preliminary and final field report, and tank evaluation will be completed in accordance with applicable federal and local regulations. Refer to APPENDIX L and/or the Warranty Repair Procedures for detailed inspection criteria.

Willbros will provide the onsite QC and visual inspection for the repair review and NDT data review. Willbros will provide certified API653 and/or NDE inspectors / Technicians as appropriate to complete the project.

The inspector will be assisted by our on-site personnel as needed to perform the visual inspection. NDE Technicians and the API653 inspector(s) are qualified to ASNT NDE Level II in performing all NDE inspections. The API653 inspector(s) will monitor the NDE testing and review the test data acquired for potential areas of concern and to have follow-up proof UT or NDE inspections.

4.5.2.1 GENERAL TANK OVERVIEW

The API653 inspector will perform a general overview visual inspection of the tank for integrity concerns in compliance with latest editions of API650, Welded Steel Tanks for Oil Storage, API653, tank inspection, repair, alteration and reconstruction, good tank construction, industry standards and operating practice. This includes as applicable, but is not limited to:

- General assessment of the tank overall surfaces for obvious area of concern or potential hole(s)
- Visual Inspection of all repair areas – Check areas for signs of holes, cracks or defective workmanship
- Pressure test all tank nozzle piping to check pressure integrity – Tank shell to first flange

4.5.3 TANK CALIBRATION

(Only in case of relevant changes to configuration of tank components – Not planned or anticipated)

The tanks will be strapped (calibrated) in accordance with API's Manual of Petroleum Measurement Standards Chapter 2 – Tank Calibration utilizing the Optical Method. A three-dimensional scan of the tank internal wall will be performed utilizing a GPT-3100W Non-Prism Total Station to accomplish a high definition scan. A proprietary computer program will then be utilized to determine precise tank capacities and generate the final tank calibration charts. Interspec, LLC will perform the strapping, dimensioning and final tank calibration charts. See sample below:

Sample Format

1/16 inch - 2 feet per page

0 FEET							
0	** 776	3	1,622	6	2,467	9	3,312
1/16	793	1/16	1,639	1/16	2,485	1/16	3,330
1/8	811	1/8	1,657	1/8	2,502	1/8	3,348
3/16	829	3/16	1,675	3/16	2,520	3/16	3,365
1/4	846	1/4	1,692	1/4	2,538	1/4	3,383
5/16	864	5/16	1,710	5/16	2,555	5/16	3,401
3/8	881	3/8	1,727	3/8	2,573	3/8	3,418
7/16	899	7/16	1,745	7/16	2,590	7/16	3,436
1/2	917	1/2	1,763	1/2	2,608	1/2	3,453
9/16	934	9/16	1,780	9/16	2,626	9/16	3,471
5/8	952	5/8	1,798	5/8	2,643	5/8	3,489
11/16	970	11/16	1,816	11/16	2,661	11/16	3,506
3/4	987	3/4	1,833	3/4	2,678	3/4	3,524
13/16	1,005	13/16	1,851	13/16	2,696	13/16	3,542
7/8	1,022	7/8	1,868	7/8	2,714	7/8	3,559
15/16	1,040	15/16	1,886	15/16	2,731	15/16	3,577
1	1,058	4	1,904	7	2,749	10	3,594
1/16	1,075	1/16	1,921	1/16	2,766	1/16	3,612
1/8	1,093	1/8	1,939	1/8	2,784	1/8	3,630
3/16	1,111	3/16	1,957	3/16	2,802	3/16	3,647
1/4	1,128	1/4	1,974	1/4	2,819	1/4	3,665
5/16	1,146	5/16	1,992	5/16	2,837	5/16	3,682
3/8	1,163	3/8	2,009	3/8	2,854	3/8	3,700
7/16	1,181	7/16	2,027	7/16	2,872	7/16	3,718
1/2	1,199	1/2	2,045	1/2	2,890	1/2	3,735
9/16	1,216	9/16	2,062	9/16	2,907	9/16	3,753
5/8	1,234	5/8	2,080	5/8	2,925	5/8	3,771
11/16	1,252	11/16	2,098	11/16	2,942	11/16	3,788
3/4	1,269	3/4	2,115	3/4	2,960	3/4	3,806
13/16	1,287	13/16	2,133	13/16	2,978	13/16	3,823
7/8	1,304	7/8	2,150	7/8	2,995	7/8	3,841
15/16	1,322	15/16	2,168	15/16	3,013	15/16	3,859
2	1,340	5	2,186	8	3,030	11	3,876
1/16	1,357	1/16	2,203	1/16	3,048	1/16	3,894
1/8	1,375	1/8	2,221	1/8	3,066	1/8	3,911
3/16	1,393	3/16	2,238	3/16	3,083	3/16	3,929
1/4	1,410	1/4	2,256	1/4	3,101	1/4	3,947
5/16	1,428	5/16	2,274	5/16	3,119	5/16	3,964
3/8	1,445	3/8	2,291	3/8	3,136	3/8	3,982
7/16	1,463	7/16	2,309	7/16	3,154	7/16	3,999
1/2	1,481	1/2	2,326	1/2	3,171	1/2	4,017
9/16	1,498	9/16	2,344	9/16	3,189	9/16	4,035
5/8	1,516	5/8	2,362	5/8	3,207	5/8	4,052
11/16	1,534	11/16	2,379	11/16	3,224	11/16	4,070
3/4	1,551	3/4	2,397	3/4	3,242	3/4	4,088
13/16	1,569	13/16	2,414	13/16	3,260	13/16	4,105
7/8	1,586	7/8	2,432	7/8	3,277	7/8	4,123
15/16	1,604	15/16	2,450	15/16	3,295	15/16	4,140

1 FEET							
0	4,158	3	5,003	6	5,849	9	6,695
1/16	4,176	1/16	5,021	1/16	5,867	1/16	6,713
1/8	4,193	1/8	5,039	1/8	5,885	1/8	6,731
3/16	4,211	3/16	5,056	3/16	5,902	3/16	6,748
1/4	4,228	1/4	5,074	1/4	5,920	1/4	6,766
5/16	4,246	5/16	5,092	5/16	5,938	5/16	6,784
3/8	4,264	3/8	5,109	3/8	5,955	3/8	6,801
7/16	4,281	7/16	5,127	7/16	5,973	7/16	6,819
1/2	4,299	1/2	5,144	1/2	5,990	1/2	6,836
9/16	4,316	9/16	5,162	9/16	6,008	9/16	6,854
5/8	4,334	5/8	5,180	5/8	6,026	5/8	6,872
11/16	4,352	11/16	5,197	11/16	6,043	11/16	6,889
3/4	4,369	3/4	5,215	3/4	6,061	3/4	6,907
13/16	4,387	13/16	5,233	13/16	6,079	13/16	6,925
7/8	4,404	7/8	5,250	7/8	6,096	7/8	6,942
15/16	4,422	15/16	5,268	15/16	6,114	15/16	6,960
1	4,440	4	5,285	7	6,131	10	6,977
1/16	4,457	1/16	5,303	1/16	6,149	1/16	6,995
1/8	4,475	1/8	5,321	1/8	6,167	1/8	7,013
3/16	4,493	3/16	5,338	3/16	6,184	3/16	7,030
1/4	4,510	1/4	5,356	1/4	6,202	1/4	7,048
5/16	4,528	5/16	5,374	5/16	6,220	5/16	7,066
3/8	4,545	3/8	5,391	3/8	6,237	3/8	7,083
7/16	4,563	7/16	5,409	7/16	6,255	7/16	7,101
1/2	4,581	1/2	5,426	1/2	6,272	1/2	7,118
9/16	4,598	9/16	5,444	9/16	6,290	9/16	7,136
5/8	4,616	5/8	5,462	5/8	6,308	5/8	7,154
11/16	4,633	11/16	5,479	11/16	6,325	11/16	7,171
3/4	4,651	3/4	5,497	3/4	6,343	3/4	7,189
13/16	4,669	13/16	5,515	13/16	6,361	13/16	7,207
7/8	4,686	7/8	5,532	7/8	6,378	7/8	7,224
15/16	4,704	15/16	5,550	15/16	6,396	15/16	7,242
2	4,721	5	5,567	8	6,413	11	7,259
1/16	4,739	1/16	5,585	1/16	6,431	1/16	7,277
1/8	4,757	1/8	5,603	1/8	6,449	1/8	7,295
3/16	4,774	3/16	5,620	3/16	6,466	3/16	7,312
1/4	4,792	1/4	5,638	1/4	6,484	1/4	7,330
5/16	4,810	5/16	5,656	5/16	6,502	5/16	7,348
3/8	4,827	3/8	5,673	3/8	6,519	3/8	7,365
7/16	4,845	7/16	5,691	7/16	6,537	7/16	7,383
1/2	4,862	1/2	5,708	1/2	6,554	1/2	7,400
9/16	4,880	9/16	5,726	9/16	6,572	9/16	7,418
5/8	4,898	5/8	5,744	5/8	6,590	5/8	7,436
11/16	4,915	11/16	5,761	11/16	6,607	11/16	7,453
3/4	4,933	3/4	5,779	3/4	6,625	3/4	7,471
13/16	4,951	13/16	5,797	13/16	6,643	13/16	7,489
7/8	4,968	7/8	5,814	7/8	6,660	7/8	7,506
15/16	4,986	15/16	5,832	15/16	6,678	15/16	7,524

Capacities in Gallons

** Volume below Strike Point. * Bottom Volumes based on Physical Survey.
** Strike Point located 1.80" above intersection of shell & bottom.

Liquid Head Calculated at 35.0 API.
Volumes reflect a Steel Temperature of 60 F.

Nominal Tank Size - 100' 0" Diameter x 40' 0" Height
See Page 2 for Floating Roof Information.

Safe Fill Height - 38' 00".

Strapped : 11 August 2009
Computed : G.D.B
File No. : 123456/S789

Calculated per API MPMS
Ch. 2.2A/95 & Ch. 2.2D/03

Figure 4-1 Sample Tank Calibration Calculations

Distribution is limited to US Government agencies and their contractors; administrative/operational use within the context of this project. Other request shall be referred to the Naval Facilities Engineering Service Center.

4.6 HEALTH, SAFETY AND ENVIRONMENTAL MANAGEMENT

A comprehensive Health and Safety Plan (HASP) has been outlined and developed for the Red Hill Complex Project. The HASP carefully monitors the safety and condition of the tank, surrounding tunnel environments and area personnel to ensure a safe work place is maintained throughout all phases of the project and activities. This plan ensures the careful preparation, communication, coordination, controls and execution of all activities for this SOW and as applicable for surrounding activities.

The Site Manager, SSHO, associated crews, subcontractors and visiting personnel will meet for daily safety meetings and to review the (JSA) Job Safety Analysis form, confined space entry permit, gas atmospheric testing and surrounding conditions. All immediate and surrounding concerns will be noted, monitored and evaluated throughout the day for potential changes. Lock out Tag out (LOTO) will be in place and verified to ensure there are not any improper releases of energy or gases into the surrounding environment. Continuous oxygen, gas LEL and environmental monitors will be utilized by competent trained personnel. Trained confined space attendants will be stationed for continuous monitoring of the working personnel and surrounding conditions. Atmospheric conditions will be maintained at the appropriate OSHA PEL levels. Personnel PPE will be updated to appropriate atmospheric condition. Any area that will be outside of the OSHA PEL levels will be barricaded and have signs posting the appropriate PPE level for entry.

WGS will mount two (2) suspended scaffolding systems to the center structure of the specified tank which will be removed from service. The two (2) suspended scaffolding systems will provide an additional back up emergency descent system for safety and rescue purposes.

Willbros has reviewed the SOW and developed a preliminary HASP to encompass all of the activities, environments and surrounding areas. Safety measures that will be taken during the on-site work include the use of permits, monitoring confined space procedures and having respiratory equipment in the standby position. Other safety measures include the use of hard hats, safety toe footwear, safety eye wear, brass hammers and brass wrenches. All work will be within the appropriate compliance of environmental and safety standards and/or regulations.

4.7 SUBCONTRACTOR MANAGEMENT AND COORDINATION

Our Program Manager will coordinate with our Corporate Procurement Department, Project Manager, Site Manager, Engineer, vendors and suppliers to open accounts, coordinate orders and delivery schedules, and enter required information for each vendor and supplier in our purchasing database.

The Program Manager makes the final decision on the use of vendors and subcontractors. He has the authority to make commitments for the company on proposals, modifications and subcontract agreements.

However, requirements always exist throughout the effort that requires a subcontractor or specialized vendor. Our process provides proven steps to select the most qualified subcontractor or vendor. The Program Manager has the final authority on all decisions made from identifying subcontractors and vendors until service or work completion, or parts have passed all tests.

Our Corporate Procurement Department directly supports our NAVFAC project team as follows:

- Identify and prequalify vendors and suppliers for inclusion in our Worldwide Supplier database
- Assist in preparing the Master Agreements and blanket purchase agreements
- Facilitate the distribution of the agreements to minority and woman-owned businesses
- Expedite deliveries of equipment and material during phase-in to ensure the project functions immediately
- Provide any other purchasing assistance needed to ensure quick, orderly delivery of service

Distribution is limited to US Government agencies and their contractors; administrative/operational use within the context of this project. Other request shall be referred to the Naval Facilities Engineering Service Center.

Qualified subcontractors who have the required licenses, specialized equipment, skilled personnel and established proficiency training programs to support the requirement are best suited to execute the specialized requirements of this contract. We follow specific steps to ensure subcontractors have the qualifications and resources to perform appropriately. By applying these methods to subcontractor selection, we ensure that the subcontractors selected meet our high standards for performance, quality and timeliness. The process comprises the following:

- Conduct face-to-face meetings with potential subcontractors
- Provide a clear and detailed Statement of Work (SOW) or Material/Part Specifications
- Review quality of past performance
- Examine financial resources including the availability of a line of credit to finance operations between payments and any potential or existing contractual and/or legal issues
- Validate that subcontractor management is experienced and has a proven track record of successful on-time completion of quality work on contracts similar in scope and size
- Verify subcontractor has a permanent team of craftsmen skilled, licensed, and certified in the required specialty areas
- Appraise existing capital equipment on hand to perform the targeted work scope versus the amount of equipment that would have to be purchased to perform the work
- Conduct competitive bid process to determine best value

4.7.1 SUBCONTRACTOR MANAGEMENT

Our primary inspection subcontractor performing work on site reports to the Site Manager for all work tasking and performance. Willbros incorporates all subcontractors into our inspection process and schedules, and Environmental, Safety and Health (ESH) requirements. The Site Manager or designate conducts daily inspections of subcontracted work. We monitor the schedule to ensure the work meets the agreed upon timelines and we keep the Program Manager informed on the status of subcontracted work during our scheduling meetings.

We will inform the Contracting Officer of any potential subcontractor performance issues in an expeditious manner in order to minimize any impact on the Navy. We will communicate with the subcontractor directly concerning any inspection and acceptance issues. This provides open communication and clear lines of authority during the subcontract management process, and minimizes critical issues that might otherwise result in poor subcontractor performance.

When we use subcontractors, they are integrated into each project organization, and work directly for our Site Manager. They are responsible for work quality and performance levels the same as our own workforce. Work schedules, change orders, and quality of work for our entire organization is driven through our information management systems and enforced by our management team, regardless of what company is performing the work.

4.7.2 SUBCONTRACTOR COORDINATION

Our subcontractors, as members of the Willbros team, maintain direct lines of communication within their own company's workforce at the working levels to promote interaction between disciplines. Willbros and subcontract personnel have direct access to each other through formal and informal discussions about project and contractual issues.

Distribution is limited to US Government agencies and their contractors; administrative/operational use within the context of this project. Other request shall be referred to the Naval Facilities Engineering Service Center.

4.8 QUALITY CONTROL

The Willbros Quality Control System focuses on building quality into every project, not just inspecting it in the end. We implement and consistently administer the QC system on all projects by controlling the factors that directly influence a task order — people, materials, and processes.

Our quality control system is developed from EP 715-1-2, A Guide to Effective Contractor Quality Control. It is a proven Corps of Engineers (USACE) quality system that focuses on our personnel instituting controls and performing regular and frequent inspections of work performed by in-house personnel, subcontractors, and suppliers. It uses a time-tested, three-phase control process assuring that we are adequately prepared to begin a phase of work, eliminate deficiencies, and follow through in accomplishing the work compliantly.

NOTE: Per new specifications referenced in CRM 09 dated 15 Dec 2011, Willbros will ensure our QC program complies with UFGS 01 45 00.00 20.

4.8.1 QUALITY CONTROL RESPONSIBILITIES

Willbros philosophy is that quality is everyone's job. It starts with the craftsperson performing his work in a quality manner. His foreman, in turn, inspects his work. Our project manager, site managers, and field inspectors are all responsible for inspecting the work. By having several key skills in house and by ensuring that our QC personnel are multi-disciplined, we can ensure that qualified personnel conduct our inspections.

However, to address specific needs for field QC inspection and quality workmanship, WGS has appointed a Site QC Manager. Our QC Manager achieves quality and safety for this task order by properly training and monitoring performance of all site personnel for the duration of the work.

The QC Manager has the responsibility to control construction quality and inspect the work.

His specific responsibilities per UFGS 01 45 00.00 20. are as follows:

- The QC Manager is required to attend the partnering meetings, QC Plan Meetings, Coordination and Mutual Understanding Meeting, conduct the QC meetings, perform the three phases of control, perform submittal review and approval, ensure testing is performed and provide QC certifications and documentation required in this Contract.

- The QC Manager is responsible for managing and coordinating the three phases of control and documentation performed by testing laboratory personnel and any other inspection and testing personnel required by this Contract.

- The QC Manager is the manager of all QC activities.

4.8.2 QUALITY CONTROL METHODOLOGY AND APPROACH

A major component of our planned quality control activities is our site inspection plan. The QC Manager schedules in-process inspections and tests utilizing a site inspection plan to ensure that all services and supplies conform to the project Statement of Work and contract requirements. The site inspection plan is designed to identify all definable features of the work that are to be provided to the Government. It identifies the method of measuring quality service and the frequency of in-process inspections.

4.8.3 THREE PHASES OF QUALITY CONTROL FOR IN-PROCESS INSPECTION

The three phases of control include each definable feature of work, preparatory, initial, and follow-up. They are the core of our construction quality management system. We employ these three phases of control on each project to ensure that work complies with the Statement of Work, specifications, and contract requirements.

Distribution is limited to US Government agencies and their contractors; administrative/operational use within the context of this project. Other request shall be referred to the Naval Facilities Engineering Service Center.

4.8.4 PREPARATORY PHASE

The preparatory phase is accomplished prior to the start of each definable feature of work and includes as a minimum:

- Review of applicable specifications for each definable feature of work
- Review of contract drawings and other contract requirements
- Verification that appropriate shop drawings and submittals have been submitted and approved, and that required test results have been received, when required
- Review testing plan to ensure that all QC tests are included
- Ensure that all preliminary work has been completed
- Inspect all required material, equipment and preliminary work to ensure that it is on-hand and complies with shop drawings and specifications
- Review the Safety Plan and Activity Hazard Analysis (AHA) to ensure that applicable safety requirements are met and Material Safety Data Sheets are on-hand for all hazardous chemical
- Discussion of construction methods
- Other items may be added to this list as appropriate to address delivery order unique areas.

4.8.5 INITIAL PHASE

When construction crews are ready to start a definable phase of work, our QC Manager accomplishes the initial phase observing the start of work to ensure that it complies with our work plan. The results of the initial phase are documented in the daily inspection report. The following is performed for each definable feature of work:

- Check preliminary work to verify full compliance
- Establish quality workmanship requirements
- Resolve any questions, conflicts, or differences
- Review Safety Plan including hazard analysis
- Ensure testing is performed

The initial phase is repeated for each new crew to work on site and when the acceptable level of specified quality is not attained.

4.8.6 FOLLOW-UP PHASE

The follow-up phase is repeated daily for on-going work and more frequently if necessary until each definable feature of work is complete. Final follow-up checks are conducted by field personnel and all deficiencies are corrected prior to the start of additional features of work. The follow-up phase is documented in the daily inspection report and includes:

- Verifying that work is in compliance with the work plan and specifications
- Confirming that quality workmanship is maintained
- Validating that testing is performed as necessary
- Ensuring that any rework items are corrected

Distribution is limited to US Government agencies and their contractors; administrative/operational use within the context of this project. Other request shall be referred to the Naval Facilities Engineering Service Center.

4.8.7 METHODOLOGY FOR FINAL INSPECTION

At the completion of all work on the task order or on any increment established by a completion time specified, the QC Manager conducts a pre-final inspection of the work and develops a punch list of any items that do not conform to the work plans and specifications. This list is included in the quality control documentation and includes the estimated date by which the deficiencies will be corrected. Pre-final inspections eliminate punch list items before final inspection.

After the punch list deficiencies are corrected (if any), the QC Manager makes a second completion inspection to check that all of the punch list deficiencies. This final inspection and any deficiency corrections required by this inspection are finished within the time stated for completion of the entire work or for any specified increment if the project is divided into increments by separate completion dates.

The QC Manager schedules final inspections with the Government QA Inspector and end user as necessary a minimum of two workdays in advance. As part of our final inspection, we obtain all applicable warranties from subcontractors, manufacturers, vendors, and suppliers. After final acceptance of the work, Inspectors attach an Equipment Warranty Sticker thereon. This sticker for equipment states:

- Manufacturer
- Serial number
- Model number
- Contract number
- Contract name
- Date the contractor's warranty expires
- Date the manufacturer's warranty expires

The QC Manager maintains a record of all warranties and guarantees for the life of the contract and takes appropriate action to assist the Government in obtaining warranty service before the period expires if needed.

4.8.8 TESTING

All Quality control testing is performed in accordance with American Society for Testing and Materials (ASTM), EM standards, codes and industry standards. We perform specified tests as required to ensure that control measures are adequate to provide a product that conforms to contract requirements. Testing is in accordance with the contract documents and conforms to the following standards:

- ASTM standards
- DOD/NAVFAC specifications
- American Petroleum Institute (API) standards
- American Association of State Highway and Transportation Officials (AASHTO) standards
- American Welding Society (AWS) standards
- American Society of Mechanical Engineers (ASME) publications

Refer to APPENDIX L and/or the Warranty Repair Procedures for detailed testing criteria.

4.8.8.1 THE TYPES OF TESTS INCLUDE BUT ARE NOT LIMITED TO THE FOLLOWING:

- Pressure test
- Leak or vacuum box testing
- Dye Penetrant Testing
- Magnetic Particle Testing
- Ultrasonic Longitudinal
- Ultrasonic Shear Wave

Distribution is limited to US Government agencies and their contractors; administrative/operational use within the context of this project. Other request shall be referred to the Naval Facilities Engineering Service Center.

- Ultrasonic B-Scan
- Magnetic Flux Leakage
- Eddy Current and Electromagnetic Testing
- X-Rays or Radiographic
- Hardness Testing
- Materials classification
- Anchor Profiles
- Humidity and Dew Point Controls
- Dry or wet film thickness testing

4.8.9 THE QC MANAGER PERFORMS THE FOLLOWING ACTIVITIES AND PROVIDES THE FOLLOWING DATA:

- Prepares a Testing Plan and Log per 01 45 00.00 20 1.16.4.
- Verifies that testing procedures comply with the contract requirements.
  Refer to APPENDIX L and/or the Warranty Repair Procedures for detailed testing criteria.
  (The specifications may establish the minimum testing requirements. The Company may increase test frequency or provide additional tests as necessary to ensure compliance of work performed)
- Verifies laboratory facilities and procedures. All laboratories meet the criteria and accreditation specifications of the Government's solicitation.
- Checks test equipment calibration data against certified standards
- Verifies that recording forms, including all of the test documentation requirements, have been prepared
- Verifies that test documents report the expected test results and actual test results for each test or phase
- Attaches a copy of the updated Testing Plan and Log to the last daily Contractor Quality Control Report

Our QC Manager uses the Contractor Test Report format to report all necessary data and document test results. He distributes test results on the work day following the completion of each test.

4.8.10 QUALITY DOCUMENTATION AND RESOLUTION OF DEFICIENCIES

Documentation is the key element for developing, recording, analyzing, and monitoring the quality control program. At our site office, the quality records are established and inspected for validity and accountability. Government-published forms, logs, and records are utilized when appropriate. All quality control inspections are documented, and files are maintained to identify trends.

Our Construction Quality Management (CQM) Documentation System is founded on interrelated elements that collectively form the entire structure. The QC Manager maintains current records of quality control activities, operations, inspections, and tests, including subcontractors and suppliers. All records documenting our delivery order activities are preserved for the duration of the contract and then archived as required. All QA/QC documents and records are available for review by the Contracting Officer on request. Documentation includes QC reports and logs, equipment calibration records, drawings, and associated documents concerning submittals and materials that require inspection.

4.8.11 REPORTS/RECORDS

All quality control records are retained for the duration of the contract in our program management office. This record file is for contractor management use and is available to the Government on request. The QC Manager is responsible for setting up and maintaining current records of the day-to-day quality control operations, activities, and tests performed, including the work of suppliers and subcontractors.

4.8.12 WEEKLY PRODUCTION REPORT

The Production Report is produced for each week that work is performed. It is normally limited and includes field photos. The report is informal and may consist of hand written notes on a standard form. The report will account for each calendar day while on-site.

The reporting of work will be identified by terminology consistent with the statement of work. Production Reports will be prepared and dated by the WGS on-site Project Engineering and contain the following information:

- Date of report, report number, name of contractor, Delivery Order Number, title and location of tasks, and construction manager present.
- Weather conditions in the morning and in the afternoon. Include temperature, wind, rain, fog, and humidity for construction work involving concrete placement.
- A list of contractor and subcontractor personnel on the work site, their trades, employer, work location, descriptions of work performed, and hours worked.
- A list of contractor and subcontractor equipment on the work site, rented or owned, if rented - from who, location, description of work performed with equipment, and hours the equipment was on-site, used, idle, and/or down for repair.
- A list of job safety action taken and safety inspection and safety inspections conducted. Indicate that safety requirements have been met including the results of the following:
- Was a job safety meeting held? (If YES, submit a copy of the meeting minutes with final project submittals.)
- Were there any lost time accidents? (If YES, attach a copy of the completed OSHA report and submit with final project submittals.)

4.8.13 DEFICIENCY REPORTING

Our deficiency report documents discrepancies in supplies, materials, and workmanship. The report includes a summary of all corrective actions taken. Summary data is reported to the Project Manager on the Contractor Quality Control Report. A closed loop process is used for all quality control inspections and handling deficiencies. The QC Manager is accountable to follow up on any noted discrepancy with a corrective action plan to mitigate or minimize the deficiency and to prevent recurrence.

4.8.14 TASK ORDER CLOSE-OUT PROCEDURES

As part of our contract and task order close-out procedures, we have developed checklists that are used to ensure the smooth transition of completed work to the new users as well as accurate, final documentation to the Contracting Officer, COTR, and/other designated representatives. Our task order close-out checklists include the following items to include in the task order/contract turnover procedures:

- All as-built/record drawings related to the work
- All operations and maintenance manuals and/or media
- Manufacturer's warranty information and points of contact for all installed equipment, systems, etc.

Distribution is limited to US Government agencies and their contractors; administrative/operational use within the context of this project. Other request shall be referred to the Naval Facilities Engineering Service Center.

4.9 REPAIRS

Warranty repairs will be performed on any repair that is found to have defective workmanship in accordance with the requirements specified under the original task order or contract modification. Willbros will identify any defective workmanship and provide repair recommendations to the government, the repairs will be performed after review and approval by the government. The warranty repairs are limited to the repairs completed by WGS under the original task order or contract modification for tank repairs. Once repairs have been completed a new Suitability for Service Statement will be issued per Task Order SOW 5.6.2.2.
Refer to APPENDIX L and/or the Warranty Repair Procedures for detailed repair criteria.

Additional tank repairs, items or modifications are not covered under the initial contract SOW, or a part of the contract modification or original scope of work for this project. After the inspection is completed a preliminary report will be submitted to NAVFAC EXWC for their review. The final inspection report and recommendations will be submitted to NAVFAC EXWC for review and approval of items which are to be repaired, modified or replaced. All additional areas or repairs will be executed under a contract modification. All repair activities and task will be identified and listed on the project schedule. The schedule will be updated to incorporate the repair task, activities and additional time required to perform the repairs.

4.10 DEMOBILIZATION

Demobilization and staging of equipment and tools will be an on-going process as various stages of the work are completed to mitigate work site congestion. Upon completion of site operations, remaining site personnel, materials, temporary facilities, and equipment will be demobilized from the site. The final demobilization will not occur until NAVFAC EXWC personnel approve all site work and conduct a final inspection.

Willbros will conduct a final inspection and walk through with NAVFAC EXWC and FLC Pearl Harbor personnel. The findings will be included in the Project Construction Certification Report.

Distribution is limited to US Government agencies and their contractors; administrative/operational use within the context of this project. Other request shall be referred to the Naval Facilities Engineering Service Center.

5.0 KEY PERSONNEL AND SUBCONTRACTORS

Table 5-1 demonstrates that our personnel meet or exceed the minimum qualifications for this task order. The table summarizes the project personnel experience, qualifications and certifications; see Appendix G for detailed resumes for each person.

KEY PERSONNEL POSITION	PERSONNEL NAME	QUALIFICATIONS
Project Manager Alternate SM/QCM	James Hagen	▪ 15 years POL Facilities and Industrial Construction and Maintenance experience ▪ Construction Site Manager at Red Hill 2yr ▪ NAVFAC CQM ▪ OSHA 30 ▪ Certified Competent Person – Confined Space / Fall Protection / LOTO / Respiratory ▪ Hazardous Waste / SPCC / Confined Space/
Site Manager Alternate SSHO	John Sebok	▪ 11 years of construction experience ▪ 6 years of POL construction experience ▪ 3 years of experience at Red Hill ▪ Certified Competent Person – Confined Space / Fall Protection /Scaffolding / LOTO/ Respiratory ▪ Hazard Communication / SPCC / PPE training ▪ OSHA 30
Project Engineer	Andrew J. Parsons	▪ Over 25 years of experience ▪ Areas of experience include modeling of thermal growth in structures, piping and vessel systems; finite element analysis; static and dynamic analysis of two phase flow regimes in piping; transient and steady- state flow modeling, ASME B31.3 and B31.4 evaluations to alleviate harmonic vibration. Petroleum production equipment experience includes design optimization, proposal preparation, detailed equipment design, drawing preparation, project scheduling, and cost analysis.
Project QCM API 653	Matt Halderman	▪ Over 19 years of experience ▪ API 653 ▪ IRIS-NDE Level II MT, PT, RT ▪ AWS CWI ▪ API TES (Tank Entry Supervisor)
Site Safety & Health Officer (SSHO)	Jaymes Barlos	▪ Certified Competent Person – Confined Space / Fall Protection / LOTO / Respiratory ▪ Hazard Communication / SPCC / PPE training ▪ OSHA 30

Table 5-1. Key Personnel Qualifications

The above table summarizes the personnel experience, qualifications and certifications; see Appendix G for detailed resumes for each person.

6.0 TECHNOLOGIES, MATERIALS AND EQUIPMENT

6.1 TECHNOLOGIES AND EQUIPMENT

Note: The equipment listed below does not apply to the Warranty Repairs associated with this TO.

Willbros in conjunction with subcontractors will utilize the most modern technologies available and proven instruments to perform equipment, STI or API 653 inspection and Non-Destructive Examinations. Some of the technologies to be utilized, but are not limited to, are as follow:

- Krautkramer DMS 2 Ultrasonic thickness meters to determine metal thickness. These meters are of the latest technology displaying both a thickness reading for the metal but also a second reading of the coating thickness when measuring through paint. All measurements are electronically stored and down loaded into the API-653 Report Program. All minimum required thicknesses, corrosion rates, tank safe fill heights and tank life before required repairs are necessary.
- Krautkramer USN-60 Ultrasonic longitudinal and shearwave test equipment used to determine or evaluate metal thickness. These test equipment are of the latest technology longitudinal and shearwave test equipment for evaluating material flaws in metal plates and thickness testing. The equipment can be set up for displaying both a thickness reading for the metal but also a second reading of the coating thickness when measuring through paint.
- Shell settlement, edge settlement and bottom levelness measurements are taken using a high accuracy HILTI Laser Transit. All results are entered into a computerized program and evaluated in accordance with API-653 Appendix B.
- A Partlow MRC 5000 pressure/temperature transmitter and chart recorder is used for conducting pipeline pressure testing in accordance with API-1110. It reads and records in 0.1 psi increments.
- Thorpe pit gauges when measuring pitting on tank bottoms, shells and roofs. Also when evaluating pitting and corrosion on piping during an API-510/570/653 evaluation.
- PHD.LITE atmosphere testing equipment
- MFE Enterprises' 2412 permanent magnet system floor scanners for detecting backside corrosion on carbon steel plates. (Available alternate resource)
- A Silver Wing dry transducer type magnetic tank crawler to obtain continuous readings of thickness on the tank shell at heights of up to 75 feet. (Especially good when inspecting underground UST or cut & cover tanks) (Available alternate resource)

Our inspectors are certified on the operation and testing on all the equipment per manufacturer's guidelines, ASNT SNT-TC1A Level II, and the requirements specified in specifications, ASME Section V, API or other any applicable codes.

Other technologies that will be utilized include:

- Arc Welding
- NDT VT - Non-destructive testing Visual Examination.
- NDT PT - Non-destructive testing Dye Penetrant Examination.
- NDT MT - Non-destructive testing Magnetic Particle Inspection, Fluorescent Liquid Solution.
- NDT LT - Vacuum Box Leak Testing Welds.

Refer to APPENDIX L and/or the Warranty Repair Procedures for detailed testing criteria.

Distribution is limited to US Government agencies and their contractors; administrative/operational use within the context of this project. Other request shall be referred to the Naval Facilities Engineering Service Center.

7.0 HAZARDOUS WASTE DISPOSAL

7.1 HAZARDOUS WASTE MATERIALS OR PRODUCTS

Willbros has developed a detailed waste disposal and treatment plan (WDP) to address all hazardous waste on this task order.

7.2 HAZARDOUS WASTE DISPOSAL

All Federal, State, and local hazardous waste regulations shall be complied with for all material disposal. Please refer to the WDP and EPP for additional documentation.

Distribution is limited to US Government agencies and their contractors; administrative/operational use within the context of this project. Other request shall be referred to the Naval Facilities Engineering Service Center.

8.0 PROJECT REPORTING AND DOCUMENTATION

Project reporting and documentation will be provided to the Government during our final documentation following the completion of the field activities.

8.1 REPORTING REQUIREMENTS

Willbros SM will submit daily Quality Control Reports together with the Daily Progress Reports. All reports will be included in the Final Report. Daily reports will be submitted to NAVFAC EXWC daily or upon request.

8.2 MEETING MINUTES

Willbros will attend meetings, as requested by the NTR, to discuss technical or regulatory issues, and project progress and status. Willbros will prepare presentation materials, as requested by the NTR, prior to the subject meeting.

8.3 DIGITAL IMAGING

A photo permit will be applied for to permit the use of digital images to be taken during the course of the work. Digital imaging will be provided with the Final Report.

8.4 DOCUMENTATION

Field activities will be documented on a daily basis in the SM field logbook for the project. The following items will be noted in the field logbook:

- Name/initials of the Site Manager
- Date, time, and location of activity/action
- Encountered problems and resolutions
- Health and Safety information (i.e. weather conditions, potential hazards)
- Other appropriate information

Subcontractor activities will also be recorded, and subcontractor daily logs will be provided to Willbros for backup. The daily logs and reports will be maintained in a filing system established for the project and shall also be provided to the government, as requested.

8.5 PROJECT COMPLETION REPORT

At the completion of field activities, a Project Completion Report documenting site activities and data generated will be prepared for review and approval. The Project Completion Certification Report shall include all permits, NDE results, vendor purchased equipment certification (to include serial and model number), operation and maintenance manuals (if required), daily quality control (QC) and progress reports, and as-built drawings, suitability for service statement and meeting minutes. The Project Completion Certification Report will also include an electronic version of the as-built drawings.

Distribution is limited to US Government agencies and their contractors; administrative/operational use within the context of this project. Other request shall be referred to the Naval Facilities Engineering Service Center.

APPENDIX A

PROJECT SPECIFICATIONS

Distribution is limited to US Government agencies and their contractors; administrative/operational use within the context of this project. Other request shall be referred to the Naval Facilities Engineering Service Center.

PROJECT SPECIFICATIONS – 54118
REDHILL TANK COMPLEX

WGS has reviewed the project SOW and listed the applicable requirements for reference and utilization in the development of the execution and work plan to ensure compliance with all relevant regulations, project requirements including the following codes and specifications:

a. American Petroleum Institute (API)

i. API Recommended Practice 574, *Inspection Practices for Piping System Components*, Latest Edition.
ii. API Recommended Practice 575, *Inspection of Atmospheric and Low-Pressure Storage Tanks*, Latest Edition.
iii. API Standard 650, *Welded Steel Tanks for Oil Storage*, Latest Edition.
iv. API Recommended Practice 651, *Cathodic Protection of Aboveground Petroleum Storage Tanks*, Latest Edition.
v. API Recommended Practice 652, *Lining of Aboveground Petroleum Storage Tanks*, Latest Edition.
vi. API Standard 653, *Tank Inspection, Repair, Alteration and Reconstruction*, Latest Edition.
vii. API/ANSI Standard 2015, *Requirements for Safe Entry and Cleaning of Petroleum Storage Tanks*
viii. API/ANSI RP 2016 *Guidelines and Procedures for Entering and Cleaning Petroleum Storage Tanks*
ix. API Standard 2550, *Measurement and Calibration of Upright Cylindrical Tanks*

b. American Society of Mechanical Engineers (ASME)

i. ASME B31.3, *Process Piping*, Latest Edition.
ii. ASME B31.4, *Pipeline Transportation Systems for Liquid Hydrocarbons and Other Liquids*, Latest Edition.
iii. ASME IX.

c. Code of Federal Regulations (CFR)

i. 29 CFR 1910, *Permit-Required Confined Spaces for General Industry*.
ii. 40 CFR 112, *Oil Pollution Prevention*.

d. Military Handbooks (MIL-HDBK)

i. MIL-HDBK 1022A, D*epartment of Defense Handbook: Petroleum Fuel Facilities*, 01 November 1999.
ii. MIL-HDBK 201B, *Military Standardization Handbook: Petroleum Operations*.

e. National Association of Corrosion Engineers (NACE)

i. NACE Recommended Practice, RP0184-97, *Repair of Lining Systems*.
ii. NACE Recommended Practice, RP0193, *External Cathodic Protection of On-Grade Metallic Storage Tank Bottoms*.
iii. NACE Recommended Practice, RP0288-94, *Inspection of Linings on Steel and Concrete*.

f. National Fire Protection Association (NFPA)

i. NFPA-30, *Flammable and Combustible Liquids Code*.

Distribution is limited to US Government agencies and their contractors; administrative/operational use within the context of this project. Other request shall be referred to the Naval Facilities Engineering Service Center.

g. Steel Tank Institute (STI)

i. STI SP001, *Standard for the Inspection of Aboveground Storage Tanks*.

h. Safety

i. EM 385-1-1, *U.S. Army Corps of Engineers Safety and Health Requirement, Appendix A Minimum Basic Outline for Accident Prevention, and sections*.

i. Unified Facilities Criteria (UFC)

i. UFC 3-460-01, *Petroleum Fuel Facilities*.

j. Unified Facilities Guide Specification (UFGS)

i. 01 11 00(01110) Summary of Work
ii. 01 14 00 (011 40) Work Restrictions
iii. 01 32 16.00 20 (01320) Construction Progress Documentation
iv. 01 33 00 (01330) Submittal Procedures
v. 01 45 00.00 20 (01450) Construction Quality Control
vi. 01 35 29 (01525) Safety Requirements
vii. 02 41 00 (02220) Demolition
viii. 23 14 00 (15996) Commissioning of Fuel Facility Systems
ix. 13219N Cleaning Petroleum Storage Tanks
x. 09 07 13.15 Epoxy/Fluoropolyurethane Interior Coatings of Welded Steel Petroleum Fuel Tanks
xi. 09 97 13.27 Exterior Coating of Steel Structures

Note(s):

1. The term "current edition" will be relative to the contract date and codes, standards, specifications, regulations and requirements current at that time.

Distribution is limited to US Government agencies and their contractors; administrative/operational use within the context of this project. Other request shall be referred to the Naval Facilities Engineering Service Center.

APPENDIX B

DETAILED PROJECT SCHEDULE

Distribution is limited to US Government agencies and their contractors; administrative/operational use within the context of this project. Other request shall be referred to the Naval Facilities Engineering Service Center.

RED HILL TANK 5 - RE-INSPECTION AND REPAIR

WILLBROS GOVERNMENT SERVICES

ID	Name	Duration	Start	Finish	Pre	Suc	Resource Names
1	TO 003 - Re-Inspect and Repair Red Hill TK5 Under Warranty Notice	309 days	Fri 9/19/14	Tue 12/1/15			
2	Project Management	309 days	Fri 9/19/14	Tue 12/1/15			
3	Prep Phase	12 days	Fri 9/19/14	Mon 10/6/14			
4	WGS Submit Revised Work Plans and Data	10 days	Fri 9/19/14	Thu 10/2/14		5	EXWC,WGS
5	Project Coordination Meeting- Finalize plans, Requirements	1 day	Fri 10/3/14	Fri 10/3/14	4	16,	WGS
6	Willbros -Revise Project & Safety Plans (Update if needed)	1 day	Mon 10/6/14	Mon 10/6/14	5		WGS
7	Follow Up Phase	1 day	Wed 6/24/15	Wed 6/24/15			
8	Submit Final Inspection Report and Suitability for Service Statem	1 day	Wed 6/24/15	Wed 6/24/15			WGS
9	Completion Phase	27 days	lon 10/26/15	Tue 12/1/15			
10	Prepare Draft Certification Report	10 days	Mon 10/26/15	Fri 11/6/15	64	11	WGS
11	Submit Draft Certification Report	1 day	Mon 11/9/15	Mon 11/9/15	10	12	WGS
12	Government Review	10 days	Tue 11/10/15	Mon 11/23/15	11	13	EXWC
13	Prepare Final Certification Report	5 days	Tue 11/24/15	Mon 11/30/15	12	14	WGS
14	Submit Final Certification Report	1 day	Tue 12/1/15	Tue 12/1/15	13		WGS
15	Tank 5 Entry, Inspection and Repair Activities	8 days	Mon 10/6/14	Thu 10/16/14			
16	Willbros - TK 5 Re-Inspection and Repair Kick-Off Meeting	1 day	Mon 10/6/14	Mon 10/6/14	5	17	WGS
17	Hold Point - NTP	5 days	Tue 10/7/14	Tue 10/14/14	16	18	EXWC
18	Prep Tanks for Inspection and Repair Access	2 days	Wed 10/15/14	Thu 10/16/14	17	20	WGS
19	Tank Access Preparation	34 days	Fri 10/17/14	Fri 12/5/14			
20	Free Product Recovery, Construction Progress Submittals	10 days	Fri 10/17/14	Thu 10/30/14	18	22	WGS
21	Tank 5 NDE Inspection of WGS Repair Locations and Tank Interior	80 days	Fri 10/31/14	Tue 2/24/15			
22	API 653 Inspection of Repair Locations and Tank Interior	10 days	Fri 10/31/14	Fri 11/14/14	20	23	E&I Hawaii
23	Vacuum Box Testing of Repair Locations	24 days	Mon 11/17/14	Fri 12/19/14	22	24	E&I Hawaii
24	MT Testing of Repair Locations	16 days	Mon 12/22/14	Tue 1/13/15	23	25	E&I Hawaii
25	Prepare Draft Inspection Findings Report	5 days	Wed 1/14/15	Tue 1/20/15	24	26	WGS
26	Submit Draft Inspection Findings Report	1 day	Wed 1/21/15	Wed 1/21/15	25	27	WGS
27	Government Review	10 days	Thu 1/22/15	Wed 2/4/15	26	28	EXWC
28	Prepare Final Inspection Findings Report	5 days	Thu 2/5/15	Wed 2/11/15	27	29	WGS
29	Submit Final Inspection Findings Report	1 day	Thu 2/12/15	Thu 2/12/15	28	30	WGS
30	Hold Point - Govt. Follow Up Instructions	8 days	Fri 2/13/15	Tue 2/24/15	29	32	EXWC
31	Tank 5 Repairs to Locations Identified in Inspection	86 days	Wed 2/25/15	Wed 6/24/15			
32	Repair Locations Identified in Inspection	14 days	Wed 2/25/15	Mon 3/16/15	30	33	Latigo Const
33	API 653 Inspection of Repair Locations and Tank Interior	8 days	Tue 3/17/15	Thu 3/26/15	32	34	E&I Hawaii

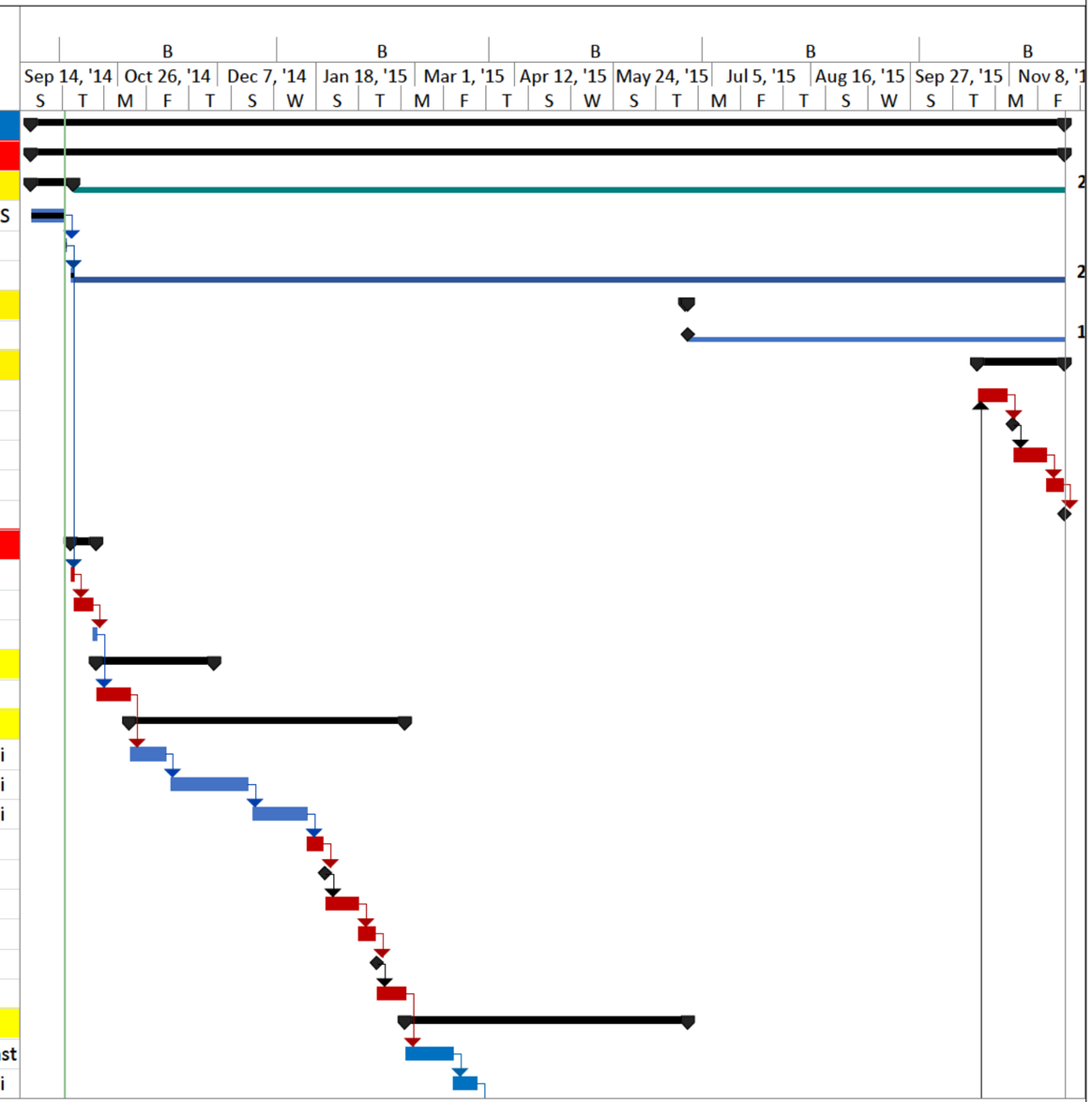

Fri 10/3/14

Critical		Slack		Rolled Up Critical Split		Inactive Summary		Start-only	
Critical Split		Slippage		External Tasks		Manual Task		Finish-only	
Task		Summary		External Milestone		Duration-only		Deadline	
Split		Project Summary		Inactive Task		Manual Summary Rollup		Progress	
Milestone		Rolled Up Critical		Inactive Milestone		Manual Summary			

RED HILL TANK 5 - RE-INSPECTION AND REPAIR

WILLBROS GOVERNMENT SERVICES

ID	Name	Duration	Start	Finish	Pre	Suc	Resource Names
34	Vacuum Box Testing of Repair Locations	16 days	Fri 3/27/15	Fri 4/17/15	33	35	E&I Hawaii
35	MT Testing of Repair Locations	13 days	Mon 4/20/15	Wed 5/6/15	34	36	E&I Hawaii
36	Touch-up Coating in Lower Dome	5 days	Thu 5/7/15	Wed 5/13/15	35	37	A & S
37	Prepare Draft Inspection Report	10 days	Thu 5/14/15	Wed 5/27/15	36	38	WGS
38	Submit Draft Inspection Report	1 day	Thu 5/28/15	Thu 5/28/15	37	39	WGS
39	Government Review	10 days	Fri 5/29/15	Thu 6/11/15	38	40	EXWC
40	Prepare Final Inspection Report	5 days	Fri 6/12/15	Thu 6/18/15	39	41	WGS
41	Submit Final Inspection Report	1 day	Fri 6/19/15	Fri 6/19/15	40	42	WGS
42	Issue Suitability for Service Statement	3 days	Mon 6/22/15	Wed 6/24/15	41	44	WGS
43	Begin Tank Close-up and Commissioning	87 days	Thu 6/25/15	Fri 10/23/15			
44	Remove Lift Equipment from Tanks	10 days	Thu 6/25/15	Wed 7/8/15	42	45	WGS
45	Remove Tools, Lighting & Safety Devices from Tanks	2 days	Thu 7/9/15	Fri 7/10/15	44	46	WGS
46	Remove Suspended Scaffolding For Tower Access	2 days	Mon 7/13/15	Tue 7/14/15	45	47	WGS
47	Remove Blinds & Fitting Protections	2 days	Wed 7/15/15	Thu 7/16/15	46	48	WGS
48	Reinstall Manways & Vent Spools	3 days	Fri 7/17/15	Tue 7/21/15	47	49	WGS
49	Reinstall Lower Piping Spools & Motor Valves	15 days	Wed 7/22/15	Tue 8/11/15	48	50	WGS
50	Government QA Activities	5 days	Wed 8/12/15	Tue 8/18/15	49	51	EXWC
51	Final Tank Inspection	1 day	Wed 8/19/15	Wed 8/19/15	50	52	WGS
52	Government QA Activities	5 days	Thu 8/20/15	Wed 8/26/15	51	53	EXWC
53	Tank Commissioning Meeting	1 day	Thu 8/27/15	Thu 8/27/15	52	54	WGS
54	Resolve Action Items	5 days	Fri 8/28/15	Thu 9/3/15	53	55	EXWC,WGS
55	Remove LOTO from Tank	1 day	Fri 9/4/15	Fri 9/4/15	54	56	WGS
56	Hold Point - EXWC QA Review of QC Finalized	5 days	Mon 9/7/15	Fri 9/11/15	55	57	EXWC
57	BOD Letter from FEAD to WGS	1 day	Mon 9/14/15	Mon 9/14/15	56	58	EXWC
58	TOC Letter from FEAD to FLC	1 day	Tue 9/15/15	Tue 9/15/15	57	59	EXWC
59	FLC Tank Fill SOP Review Meeting	1 day	Wed 9/16/15	Wed 9/16/15	58	60	FLC
60	Hold Point - Stakeholders Meeting	2 days	Thu 9/17/15	Fri 9/18/15	59	61	EXWC
61	Begin Tank Filling Procedures	10 days	Mon 9/21/15	Fri 10/2/15	60	62	FLC
62	Monitor Tanks for Leaks	10 days	Mon 10/5/15	Fri 10/16/15	61	63	WGS
63	Check All Tank Appurtenances	5 days	Mon 10/19/15	Fri 10/23/15	62	64	WGS
64	Begin Normal Tank Operations	0 days	Fri 10/23/15	Fri 10/23/15	63	10	FLC

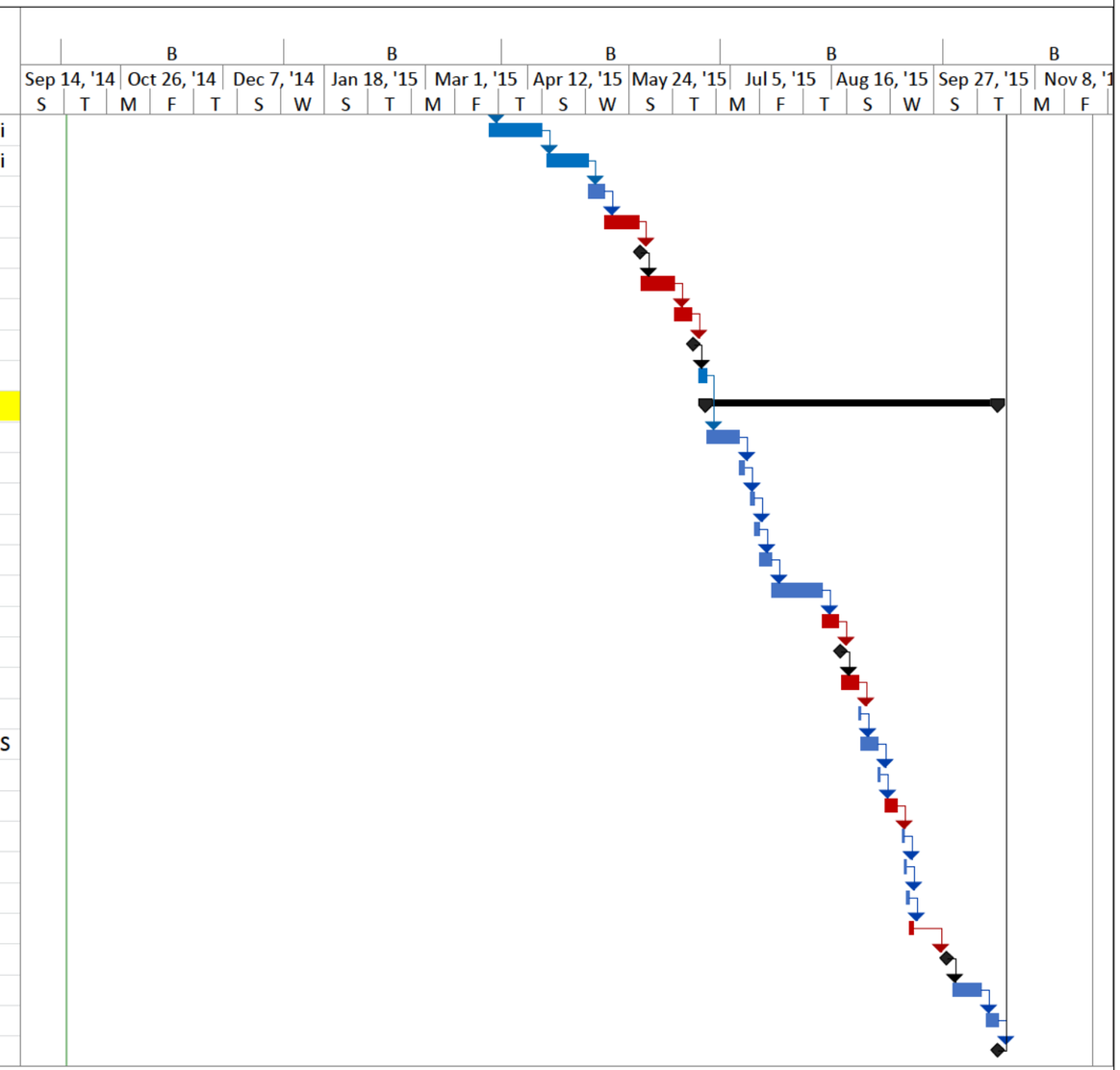

Fri 10/3/14

Critical		Slack		Rolled Up Critical Split		Inactive Summary		Start-only	
Critical Split		Slippage		External Tasks		Manual Task		Finish-only	
Task		Summary		External Milestone		Duration-only		Deadline	
Split		Project Summary		Inactive Task		Manual Summary Rollup		Progress	
Milestone		Rolled Up Critical		Inactive Milestone		Manual Summary			

APPENDIX C

DETAILED PROJECT DRAWINGS

- 01-001 COVER SHEET
- 01-002 DRAWING INDEX
- 01-005 TANK EQUIPMENT STAGING DETAILS
- 01-006 EQUIPMENT STAGING AND ACCESS
- 01-100 SITE PLAN AND LAY DOWN AREAS
- 10-001 TANK PLAN AND SECTION DETAILS
- 10-002 TANK ELEVATION PLAN AND DETAILS

Distribution is limited to US Government agencies and their contractors; administrative/operational use within the context of this project. Other request shall be referred to the Naval Facilities Engineering Service Center.

Pearl Naval Base-Redhill Complex
Clean, Inspect & Repair Tanks No. 5 & 17
Pearl Harbor, HI

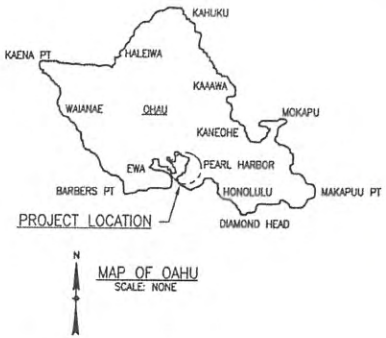

MAP OF OAHU
SCALE: NONE

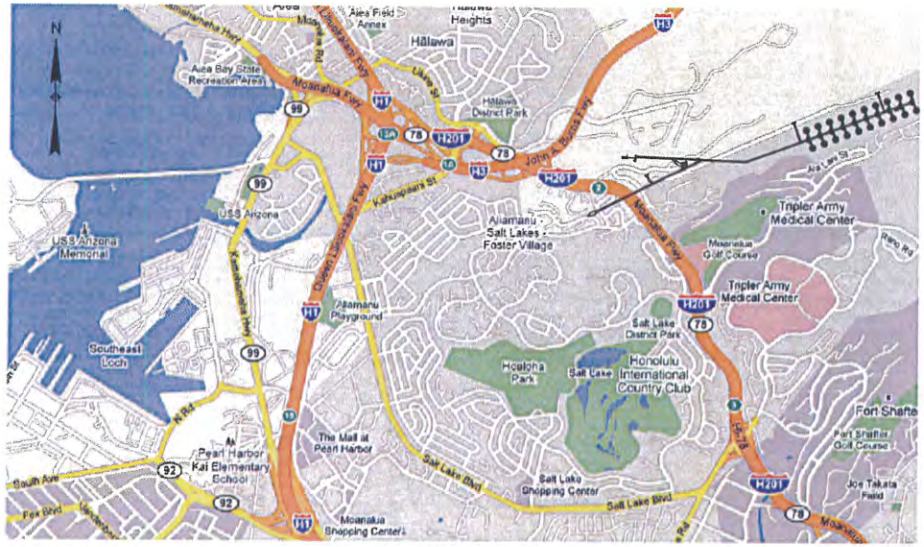

AREA VICINITY MAP

VICINITY MAP
SCALE: NONE

ABBREVIATIONS

AAE	AUTOMATIC AIR ELIMINATOR	HS	HAND SWITCH
ABAND	ABANDONED	IT	INTERFACE TANK
AC	ASPHALT CONCRETE	K	KILO DOCK
ADJ	ADJUSTABLE	kPa	KILO PASCAL
AG	ABOVE GROUND	LLA	LOW LEVEL ALARM
APPROX	APPROXIMATELY	LL	LOW LEVEL
BG	BELOW GROUND	LPD	LOW POINT DRAIN
BOP	BOTTOM OF PIPE	LR	LONG RADIUS
CL	GLASS	LSH	LEVEL SWITCH HIGH
CONC	CONCRETE	MIN.	MINIMUM
CONT	CONTINUATION	N.I.C.	NOT IN CONTRACT
D	DIAMETER	OC	ON CENTER
DB&B	DOUBLE BLOCK & BLEED	OD	OUTSIDE DIAMETER
DN	DIAMETER NORMAL	OOS	OUT OF SERVICE
DR	DRAIN	OP	OPERATOR
DPI	DIFFERENTIAL PRESSURE INDICATOR	PI	PRESSURE INDICATOR
DPP	DIESEL PURIFICATION PLANT	PS	PIPE SUPPORT, PRESSURE SWITCH
EL	ELEVATION	PSV	PRESSURE SAFETY VALVE
EQPT	EQUIPMENT	R	RADIUS
EXP	EXPANSION	S	SOLENOID, STRAINER, SUPPORT
EXIST	EXISTING	STA	STATION
FC	FLOW CONTROL	TLR	TRUCK LOADING RACK
FCV	FLOW CONTROL VALVE	TYP	TYPICAL
FISC	FLEET INDUSTRIAL SUPPLY CENTER	T	TANK
FOR	FUEL OIL RECLAIMED	TOC	TOP OF CONCRETE
FQI	FLOW QUANTITY INDICATOR	UGPH	UNDERGROUND PUMP HOUSE
FQT	FLOW QUANTITY TOTALIZER	UTF	UPPER TANK FARM
FRP	FIBERGLASS REINFORCED PIPE	VC	VALVE CHAMBER
HDPE	HIGH DENSITY POLYETHYLENE	VS	VALVE STATION
HHLA	HIGH HIGH LEVEL ALARM	W/	WITH
HHL	HIGH HIGH LEVEL	WORF	WASTE OIL RECLAMATION FACILITY
HL	HIGH LEVEL	YGS	EVENT GROUND SWITCH
HPV	HIGH POINT VENT		

CONTACT INFORMATION

ADDRESS OF FACILITY: PEARL NAVAL BASE-REDHILL COMPLEX
FACILITY POINTS OF CONTACT: FISC-PEARL HARBOR, GREG YAMASKI/ROBERT CAMPBELL
NFESC-COR, MIKE ROCHA
NFESC-NTR, DAVID WALTON

ADDRESS OF ENGINEERS: WILLBROS GOVERNMENT SERVICES, LLC
2087 E. 71ST ST.
TULSA, OK 74136
(918) 496-0400

POINTS OF CONTACT: PROJECT MGR.-TIM ANDERSON (918) 481-4357, CELL (832) 618-0281
PROJECT ENGINEER-GENE HUMES P.E. (918) 499-2764, CELL (918) 606-2731.
PROGRAM MGR.-DOUG BAYLES (918) 499-2890, CELL (918) 845-3700.

NOT FOR CONSTRUCTION

ISSUED FOR APPROVAL
9-MAR-10

DOUGLAS J. BAYLES
LICENSED PROFESSIONAL ENGINEER
No. 11128-C
HAWAII U.S.A.
3/9/10

REFERENCE	NUMBER	NO.	DATE	REVISION	BY	CHK	APPR	APPR	APPR
		A	3/9/10	ISSUED FOR PROPOSAL	LJM	TDA			

DRAWING ISSUES: CONSTRUCTION, BOS, APPROVAL, INFORMATION

ISSUED FOR	SIGNATURE	DATE	REV
DRAWN: LJM		DATE: 3/1/10	
CHECKED:		DATE:	
ENGINEER: TDA		DATE:	
W.E.I.:		DATE:	
CLIENT:		DATE:	
CLIENT:		DATE:	

WILLBROS GOVERNMENT SERVICES (U.S.), LLC

PEARL NAVAL BASE-REDHILL COMPLEX
CLEAN, INSPECT, REPAIR TANKS 5, 17
PEARL HARBOR, HI

SCALE	PROJECT NO.	DRAWING NO.	SHEET	REV.
NOTED	54118	01-001	1 OF 1	A

Pearl Naval Base-RedHill Complex
Clean, Inspect & Repair Tanks No. 5 & 17
Pearl Harbor, HI

01-GENERAL DRAWINGS

SHEET No. / REVISION No.	REFERENCE SHEET No.	NAVFAC DWG. No.	DRAWING TITLE
01-001s1rA	–	–	CLEAN, INSPECT, REPAIR TANKS #5, 17
01-002s1rA	–	–	DISCIPLINE DRAWING INDEX
01-005s1rB	–	–	TANK EQUIPMENT STAGING DETAILS
01-006s1rB	–	–	EQUIPMENT STAGING AND ACCESS
01-100s1rA	–	–	SITE PLAN & LAYDOWN AREAS
	–	–	

02-EARTHWORK AND GRADING DRAWINGS

SHEET No. / REVISION No.	REFERENCE SHEET No.	NAVFAC DWG. No.	DRAWING TITLE

03-CONCRETE DRAWINGS

SHEET No. / REVISION No.	REFERENCE SHEET No.	NAVFAC DWG. No.	DRAWING TITLE

04-STRUCTURAL DRAWINGS

SHEET No. / REVISION No.	REFERENCE SHEET No.	NAVFAC DWG. No.	DRAWING TITLE

07-PIPING DRAWINGS

SHEET No. / REVISION No.	REFERENCE SHEET No.	NAVFAC DWG. No.	DRAWING TITLE

09-ELECTRICAL DRAWINGS

SHEET No. / REVISION No.	REFERENCE SHEET No.	NAVFAC DWG. No.	DRAWING TITLE

10-TANKS AND APPURTENANCES DRAWINGS

SHEET No. / REVISION No.	REFERENCE SHEET No.	NAVFAC DWG. No.	DRAWING TITLE
10-001s1rA	–	–	TANK PLAN AND SECTION DETAILS
10-002s1rA	–	–	TANK ELEVATION PLAN, AND DETAILS

11-PERMIT DRAWINGS

SHEET No. / REVISION No.	REFERENCE SHEET No.	NAVFAC DWG. No.	DRAWING TITLE

32-DETAIL DRAWINGS

SHEET No. / REVISION No.	REFERENCE SHEET No.	NAVFAC DWG. No.	DRAWING TITLE

36-TYPICAL DRAWINGS

SHEET No. / REVISION No.	REFERENCE SHEET No.	NAVFAC DWG. No.	DRAWING TITLE

38-HYDROSTATIC TEST DRAWINGS

SHEET No. / REVISION No.	REFERENCE SHEET No.	NAVFAC DWG. No.	DRAWING TITLE

DOUGLAS J. BAKES
LICENSED PROFESSIONAL ENGINEER
No. 11128-C
HAWAII U.S.A.
3/9/10

NOT FOR CONSTRUCTION

ISSUED FOR APPROVAL
9-MAR-10

REFERENCE	NUMBER	NO.	DATE	REVISION	BY	CHK	APPR	APPR	APPR
		A	3/9/10	ISSUED FOR PROPOSAL	LJM	TDA			

DRAWING ISSUES: CONSTRUCTION, BIDS, APPROVAL, INFORMATION

ISSUED FOR	SIGNATURE	DATE	REV.
DRAWN: LJM	DATE: 3/1/10		
CHECKED:	DATE:		
ENGINEER: TDA	DATE:		
W.E.I.:	DATE:		
CLIENT:	DATE:		
CLIENT:	DATE:		

WILLBROS GOVERNMENT SERVICES (U.S.), LLC

PEARL NAVAL BASE-REDHILL COMPLEX
DISCIPLINE DRAWING INDEX
REARL HARBOR, HI

SCALE	PROJECT NO.	DRAWING NO.	SHEET	REV.
NOTED	54118	01-002	1 OF 1	A

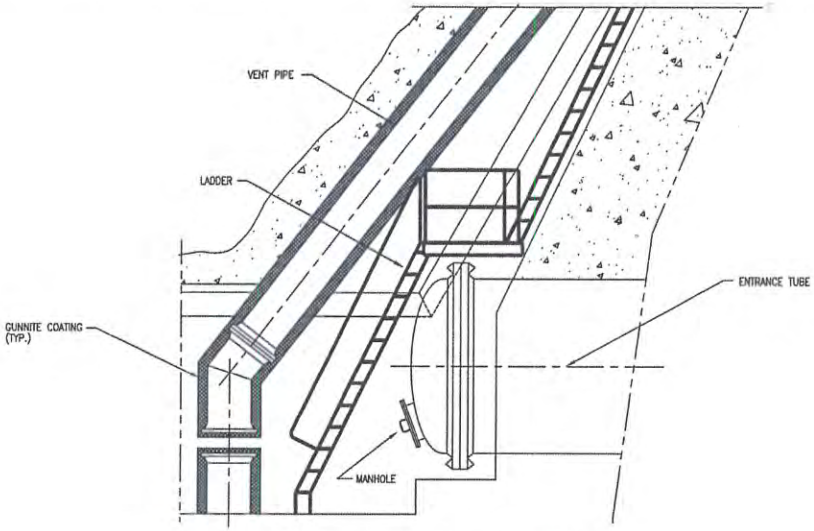

SECTION THROUGH ACCESS GALLERY/ENTRANCE TUBE

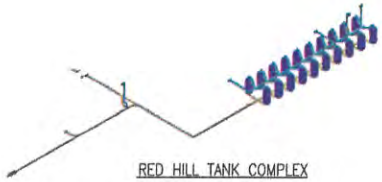

RED HILL TANK COMPLEX

FOR DETAILS (SEE DWG. 01-006)

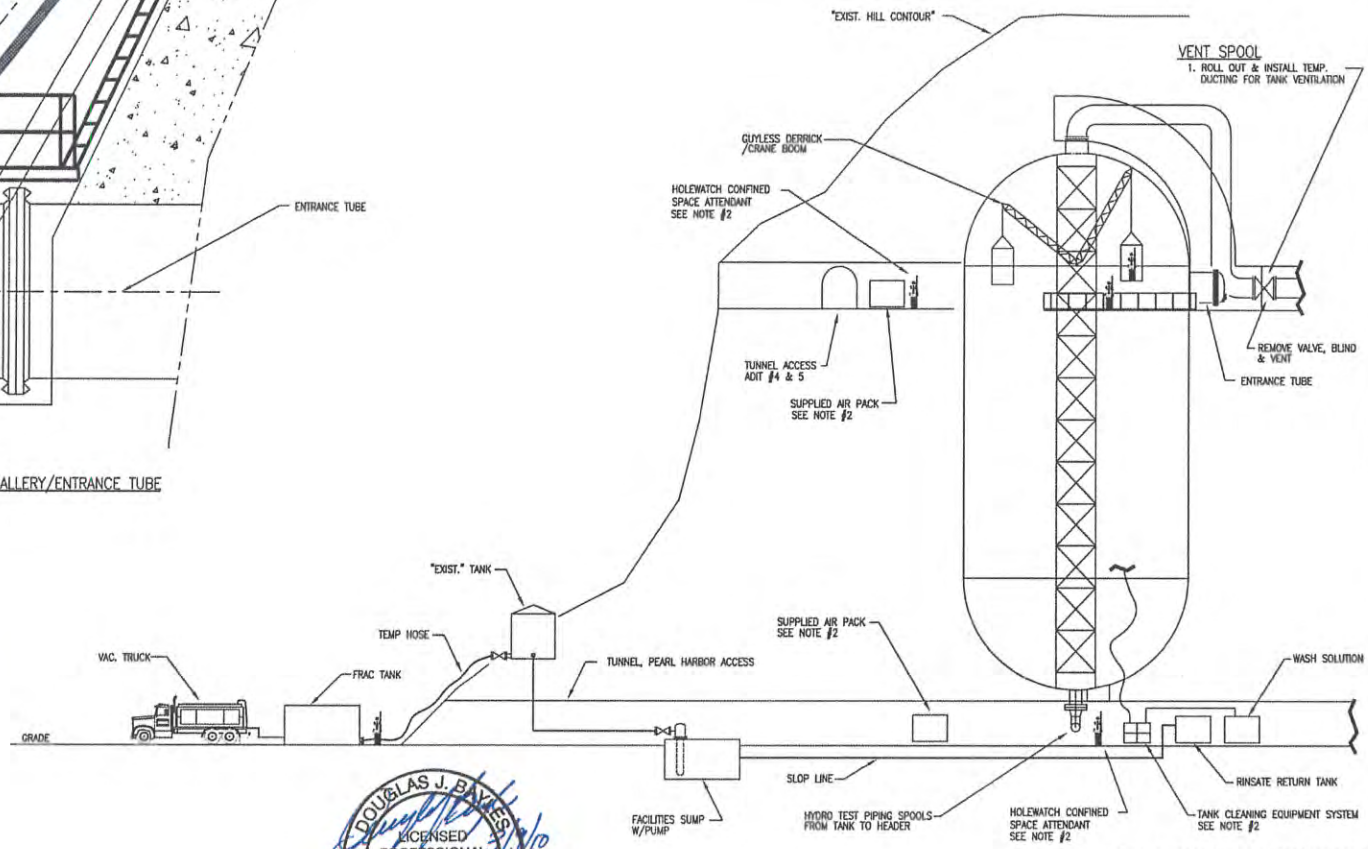

DOUGLAS J. BAYES
LICENSED PROFESSIONAL ENGINEER
No. 11128-C
HAWAII U.S.A.
3/10

NOT FOR CONSTRUCTION

ISSUED FOR APPROVAL
9-MAR-10

NOTE:
1. ACCESS THRU TUNNEL BY NAVFAC TRAIN OR WGS EQUIPMENT.
2. EQUIPMENT AND PERSONNEL MAY BE STAGED ON UPPER OR LOWER LEVELS.

REFERENCE	NUMBER	NO.	DATE	REVISION	BY	CHK	APPR	APPR	APPR
		B	3/9/10	REVISED, RESUBMITTED FOR APPROVAL					
		A	11/20/09	ISSUED FOR PROPOSAL	LJM	GH			

DRAWING ISSUES: CONSTRUCTION, BIDS, APPROVAL, INFORMATION

ISSUED FOR	SIGNATURE	DATE	REV.
DRAWN: LJM		DATE: 11/20/09	
CHECKED:		DATE:	
ENGINEER: TDA		DATE:	
W.E.I.:		DATE:	
CLIENT:		DATE:	
CLIENT:		DATE:	

DRAWING APPROVALS

WILLBROS GOVERNMENT SERVICES (U.S.), LLC

PEARL NAVAL BASE-REDHILL COMPLEX
TANK EQUIPMENT STAGING DETAILS
PEARL HARBOR, HI

SCALE	PROJECT NO.	DRAWING NO.	SHEET	REV.
NOTED	54118	01-005	1 OF 1	B

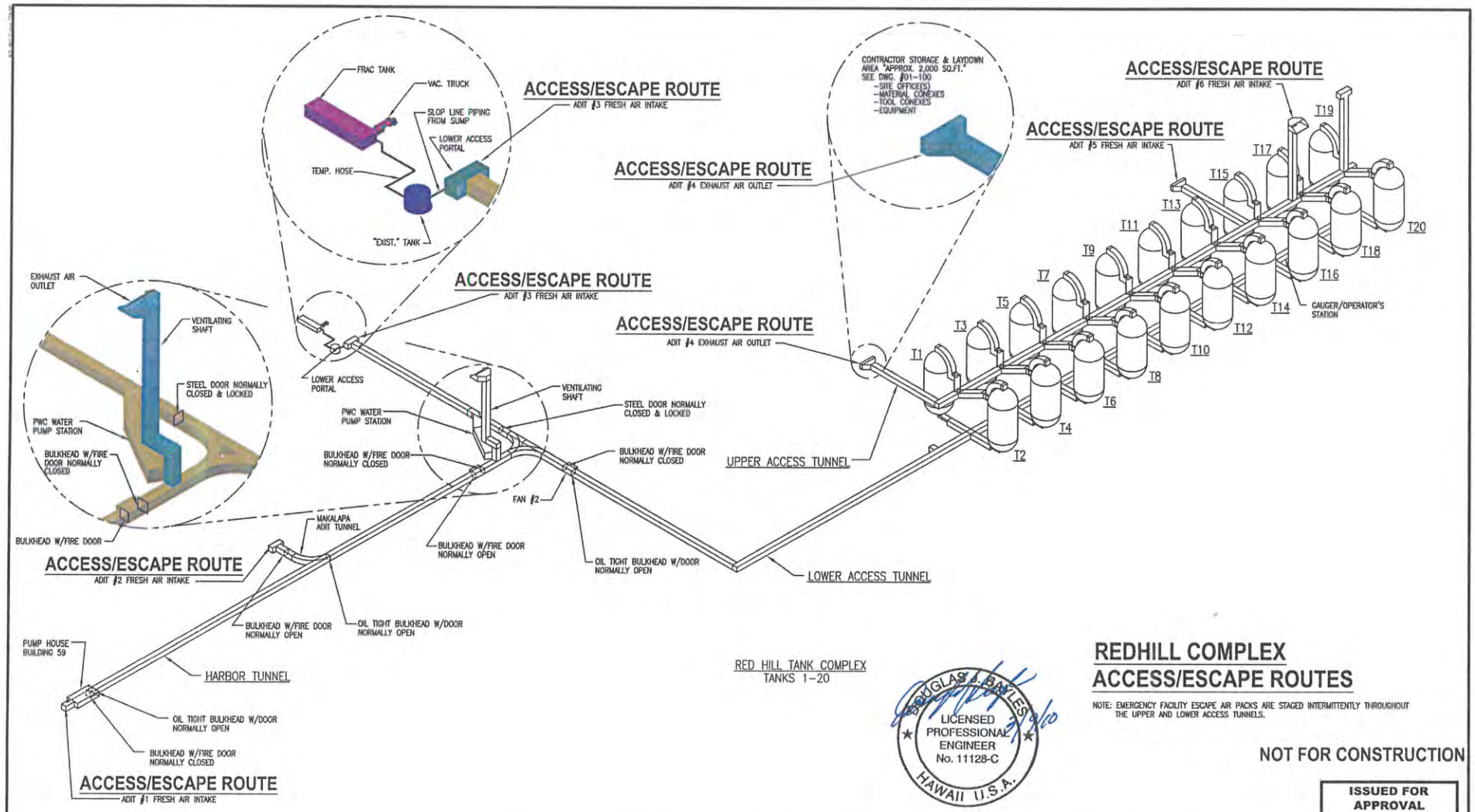

RED HILL TANK COMPLEX
TANKS 1–20

DOUGLAS A. BALLES
LICENSED PROFESSIONAL ENGINEER
No. 11128-C
HAWAII U.S.A.
3/9/10

REDHILL COMPLEX ACCESS/ESCAPE ROUTES

NOTE: EMERGENCY FACILITY ESCAPE AIR PACKS ARE STAGED INTERMITTENTLY THROUGHOUT THE UPPER AND LOWER ACCESS TUNNELS.

NOT FOR CONSTRUCTION

ISSUED FOR APPROVAL
9-MAR-10

REFERENCE	NUMBER	NO.	DATE	REVISION	BY	CHK	APPR	APPR	APPR
		B	3/9/10	REVISED, RESUBMITTED FOR APPROVAL					
		A	11/20/09	ISSUED FOR PROPOSAL	LJM	GH			

DRAWING ISSUES: CONSTRUCTION, BIDS, APPROVAL, INFORMATION

ISSUED FOR	SIGNATURE	DATE	REV.
DRAWN: LJM	DATE:	11/20/09	
CHECKED:	DATE:		
ENGINEER: TDA	DATE:		
W.E.I.:	DATE:		
CLIENT:	DATE:		
CLIENT:	DATE:		

WILLBROS GOVERNMENT SERVICES (U.S.), LLC

PEARL NAVAL BASE–REDHILL COMPLEX
EQUIPMENT STAGING AND ACCESS
PEARL HARBOR, HI

SCALE	PROJECT NO.	DRAWING NO.	SHEET	REV.
NOTED	54118	01–006	1 OF 1	B

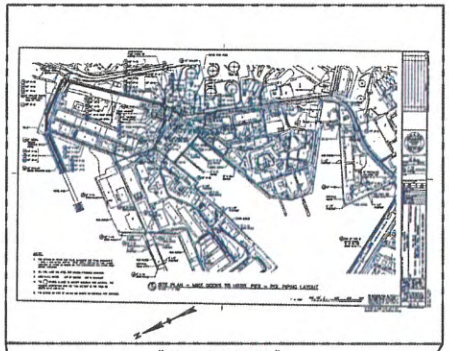

"NAVFAC PACIFIC"
PEARL HARBOR SITE PLAN
CUSTOMER SUPPLIED, PLAN ROTATED F/CLARITY

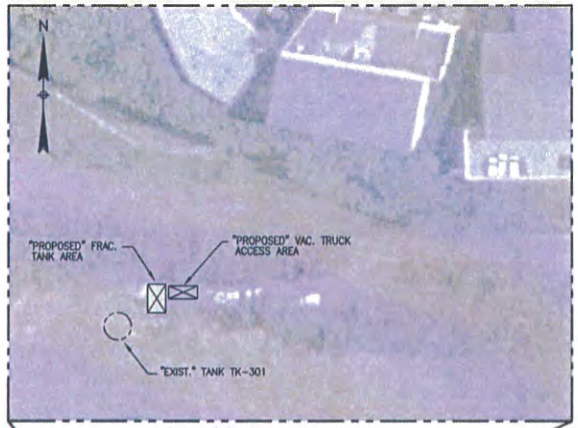

"ADIT #3" SITE LAYDOWN PLAN

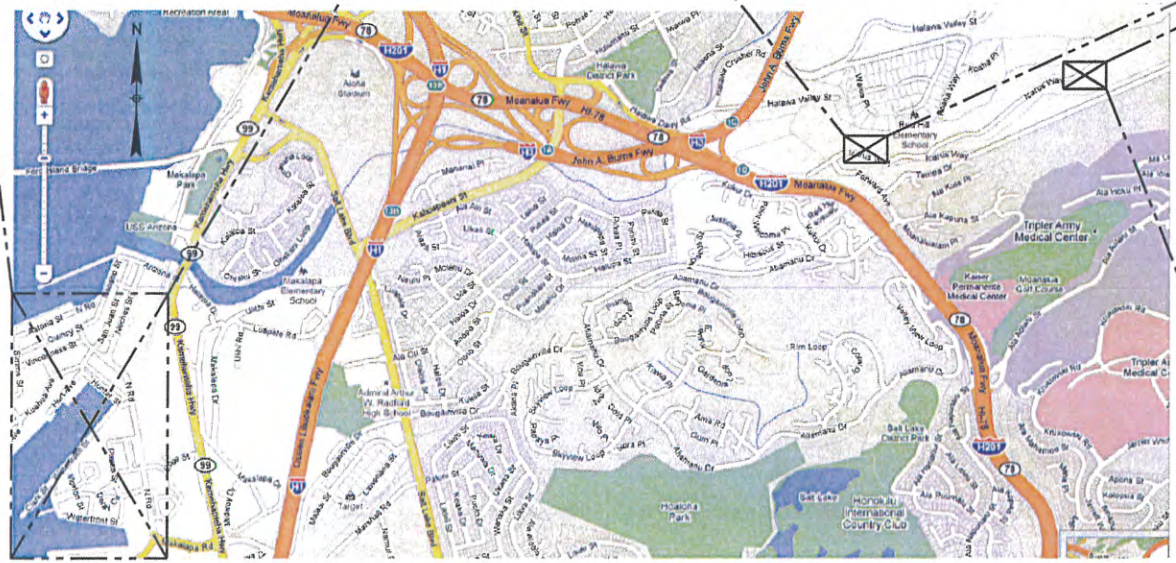

"EXPANDED" SITE PLAN

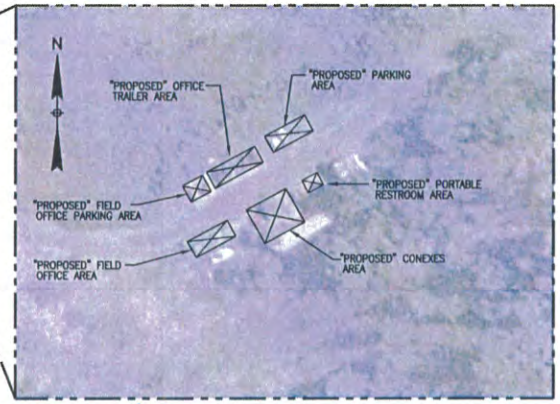

"ADIT #4" SITE LAYDOWN PLAN

DOUGLAS J. BAYLESS
LICENSED PROFESSIONAL ENGINEER
No. 11128-C
HAWAII, U.S.A.

NOT FOR CONSTRUCTION

ISSUED FOR APPROVAL
9-MAR-10

REFERENCE	NUMBER	NO.	DATE	REVISION	BY	CHK	APPR	APPR	APPR
		A	3/9/10	ISSUED FOR APPROVAL	LJM	GH			

DRAWING ISSUES	ISSUED FOR	SIGNATURE	DATE	REV.
	BIDS			
	APPROVAL			
	INFORMATION			

DRAWING APPROVALS			
DRAWN:	LJM	DATE:	2/25/10
CHECKED:	TDA	DATE:	2/25/10
ENGINEER:	TDA	DATE:	
W.E.I.:		DATE:	
CLIENT:		DATE:	
CLIENT:		DATE:	

WILLBROS GOVERNMENT SERVICES (U.S.), LLC

PEARL NAVAL BASE–REDHILL COMPLEX
SITE PLAN & LAYDOWN AREAS
PEARL HARBOR, HI

SCALE	PROJECT NO.	DRAWING NO.	SHEET	REV.
NOTED	54118	01–100	1 OF 1	A

© WWW.AC - PORT HUENEME DAYTASK DRIVE\DATA\NAVFAC REDHILL PROJECT\DRAWINGS\01_GENERAL, PLOT PLANS\01-100.DWG

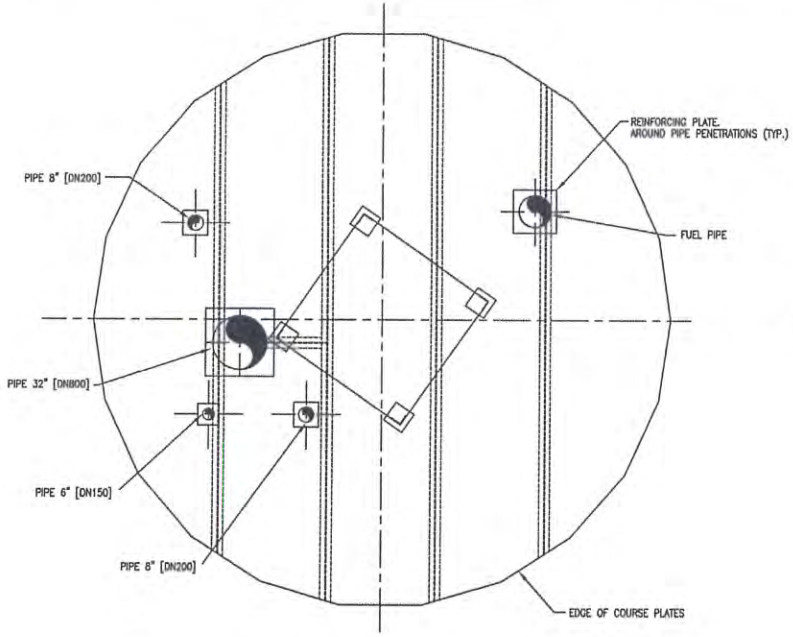

TYP. "EXIST." BOTTOM PLATE ASSEMBLY–PLAN VIEW
SCALE: NONE

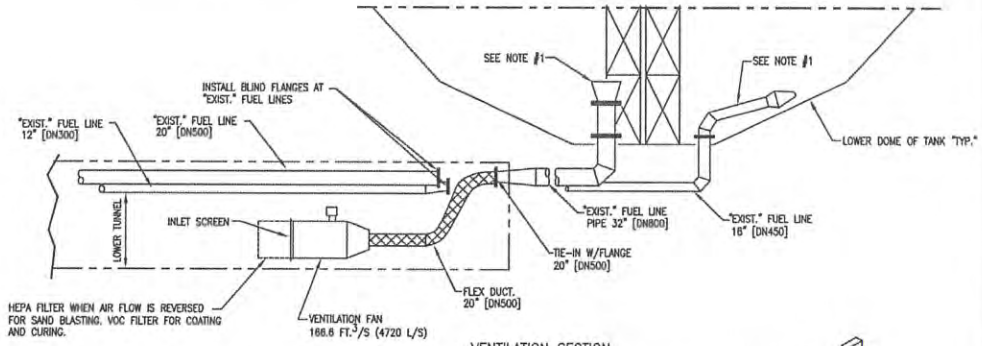

VENTILATION SECTION
SCALE: NONE

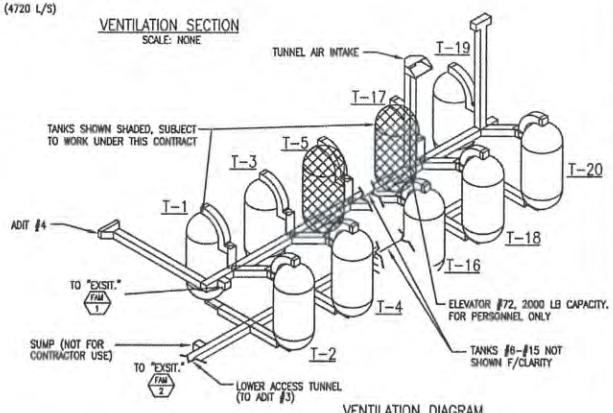

VENTILATION DIAGRAM
"EXIST." SYSTEM SHOWN

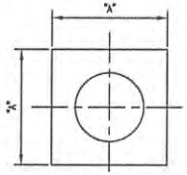

PIPE SIZE	"A"
6" [DN150]	11 7/8" [300]
8" [DN200]	13 3/4" [350]
18" [DN450]	24" [609]
32" [DN800]	37 7/8" [962]

TYP. "EXIST." REINFORCING PLATES
SCALE: NONE

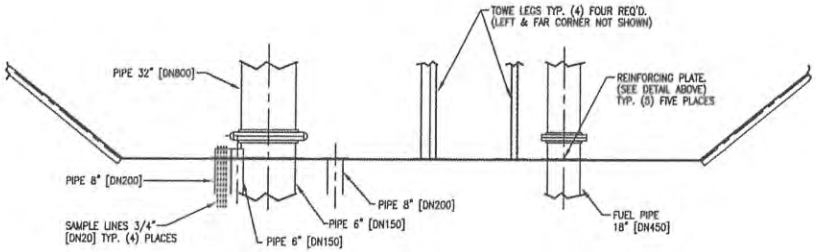

BOTTOM PLATE ASSEMBLY–SECTION VIEW
SCALE: NONE

NOTES:

1. REMOVE NOZZLES IN TANK AT LOWER FLANGED CONNECTIONS. PROTECT OPEN PIPE ENDS FROM DEBRIS AND FOREIGN OBJECTS, REINSTALL ALL WORK AFTER REPAIRS ARE COMPLETED.
2. THE CONTRACTOR SHALL MAKE SURE WHEN COATING IS REQUIRED, THE ABRASIVE BLASTING OF THE BOTTOM PLATE WILL ENSURE THAT ALL REINFORCING PLATES HAVE 1/8" [3] RADIUS ROUNDED CORNERS AND EDGES. GRIND 1/8" [3] RADIUS ROUNDED CORNERS AND EDGES ON PLATES THAT DO NOT HAVE THEM. NO SHARP CORNERS AND EDGES ARE ALLOWED WHEN APPLYING THE NEW COATING. GRIND ALL WELD BEADS AND SPATTER SMOOTH.
3. PROTECTED AREA OF 33.79' [10.30m] DIA. CIRCLE IS 896.95 SQ. FT. ACTUAL SURFACE AREA IS 947.65 SQ. FT.
4. FOR AIR FLOW THROUGH TANK AND EXHAUST, SEE DWG'S. #10-002, 01-005 & 01-006.

DOUGLAS J. BAILES
LICENSED PROFESSIONAL ENGINEER
No. 11128-C
HAWAII U.S.A.

NOT FOR CONSTRUCTION

ISSUED FOR APPROVAL
9-MAR-10

DIM'S. IN [ ] ARE MM

REFERENCE	NUMBER	NO.	DATE	REVISION	BY	CHK	APPR	APPR	APPR	APPR
		A	3/9/10	ISSUED FOR PROPOSAL	LJM	TDA				

DRAWING ISSUES: CONSTRUCTION / BIDS / APPROVAL / INFORMATION

ISSUED FOR	SIGNATURE	DATE	REV.
DRAWN: LJM	DATE: 2/26/10		
CHECKED:	DATE:		
ENGINEER: TDA	DATE:		
W.E.I.:	DATE:		
CLIENT:	DATE:		
CLIENT:	DATE:		

WILLBROS GOVERNMENT SERVICES (U.S.), LLC

PEARL NAVAL BASE–REDHILL COMPLEX
TANK PLAN & SECTION DETAILS
PEARL HARBOR, HI

SCALE	PROJECT NO.	DRAWING NO.	SHEET	REV.
NOTED	54118	10–001	1 OF 1	A

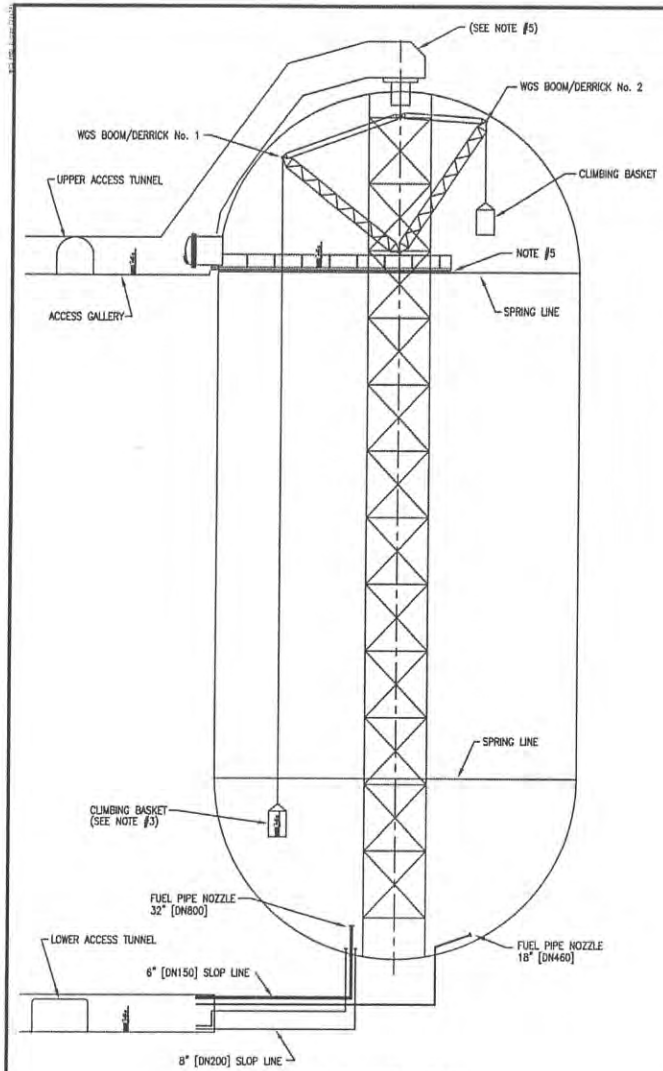

ELEVATION (A)
SCALE NONE
(LOOKING WEST)

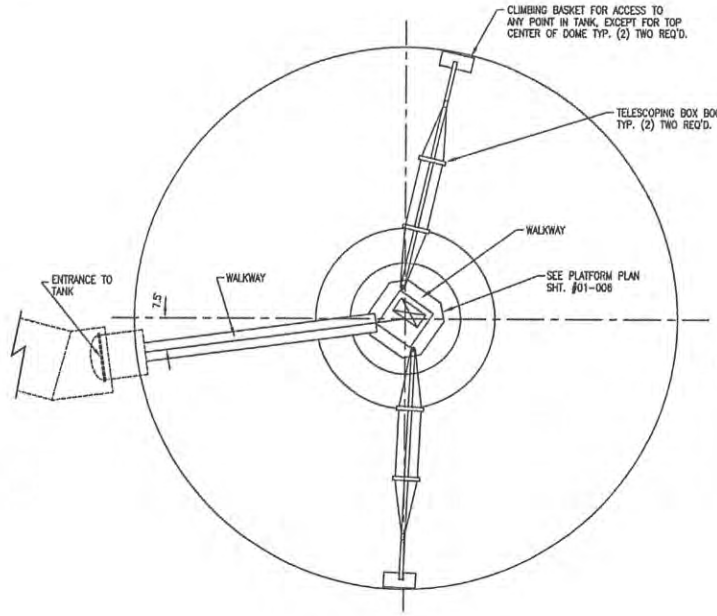

PLAN
SCALE NONE

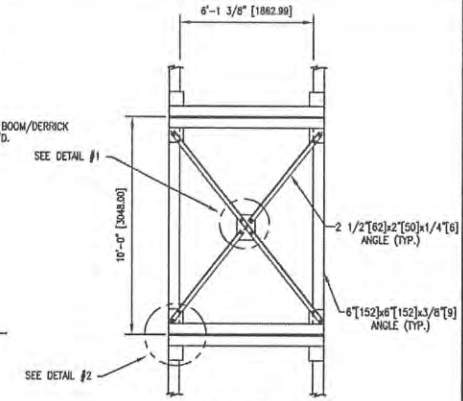

ELEVATION
SCALE none

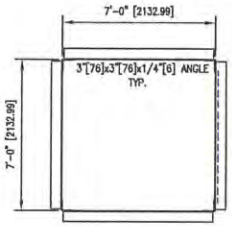

PLAN
SCALE 1:25

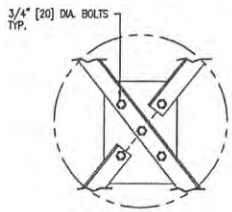

DETAIL (1)
SCALE NONE

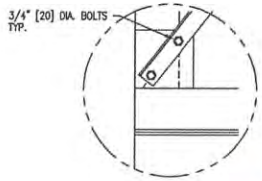

DETAIL (2)
SCALE NONE

NOTES:

1. DRAWING SHOWS "EXIST." CONDITIONS EXCEPT AS INDICATED.
2. TELESCOPING BOX BOOMS/CRANES AND ANCILLARY EQUIPMENT WILL BE STAGED IN BETWEEN THE TANKS AND READY FOR INSTALLATION.
3. BOOM AND CABLES TO SUPPORT A MAXIMUM WORKING LOAD OR BASKET OF 2,000 Lbs. [907]Kg.
4. FOR THE DURATION OF THE PROJECT WHILE IN THE TANK IS OPEN, THE CONTRACTOR SHALL PROVIDE PROTECTION FOR THE PAINTED BOTTOM AREA FROM FALLING OBJECTS AND DEBRIS FROM OVERHEAD WALKWAY AND THE TOWER STRUCTURE.
5. PROVIDE A CLIMBING BASKET INSIDE THE CENTER TOWER SUSPENDED FROM THE GAUGING GALLERY OR OTHER APPROVED LOCATION, FOR INITIAL CLEANING, INSPECTION & REPAIR OF THE TOWER.
6. CRANE BOOM/DERRICK WILL BE BOLTED/CONNECTED TO THE CENTER STRUCTURE AFTER THE STRUCTURAL INSPECTION AND ANY REPAIRS ARE COMPLETE.

DOUGLAS J. FANLER
LICENSED PROFESSIONAL ENGINEER
No. 11128-C
HAWAII, U.S.A.
3/9/10

NOT FOR CONSTRUCTION

ISSUED FOR APPROVAL
9-MAR-10

DIM'S. IN [ ] ARE MM

REFERENCE	NUMBER	NO.	DATE	REVISION	BY	CHK	APPR	APPR
		A	3/9/10	ISSUED FOR PROPOSAL	LJM	TDA		

DRAWING ISSUE: CONSTR. / BID / APPROVAL / INFORMATION

ISSUED FOR:	SIGNATURE	DATE	REV.
DRAWN: LJM	DATE: 2/26/10		
CHECKED:	DATE:		
ENGINEER: TDA	DATE:		
W.E.I.:	DATE:		
CLIENT:	DATE:		
CLIENT:	DATE:		

DRAWING APPROVALS

WILLBROS GOVERNMENT SERVICES (U.S.), LLC

PEARL NAVAL BASE-REDHILL COMPLEX
TANK ELEVATION, PLAN & DETAILS
PEARL HARBOR, HI

SCALE	PROJECT NO.	DRAWING NO.	SHEET	REV.
NOTED	54118	10-002	1 OF 1	A

APPENDIX D

PROJECT PROCEDURES - TANK CLEANING

- SOP#1 - AIR MONITORING
- SOP#2 - TANK CLEANING & DECONTAMINATION
- SOP#3 – BONDING AND GROUNDING
- SOP#4 – VACUUM TRUCK OPERATION
- SOP#5 – WATER BLASTING

Distribution is limited to US Government agencies and their contractors; administrative/operational use within the context of this project. Other request shall be referred to the Naval Facilities Engineering Service Center.

SUBJECT:	**AIR MONITORING AND SAMPLING**		
REVISION 3 6/23/09	SOP # SOP-1	PAGE	1 OF 7

1.0 POLICY

Air monitoring will be conducted on all projects involving hazardous materials in order to determine the appropriate level of protection.

2.0 PURPOSE

The primary purpose of monitoring the air in the work environment is to determine employee exposure levels to airborne contaminants. However, air monitoring results and the proper maintenance of sampling records is important for several other reasons: 1.) to document the magnitude of employee exposures and identify fluctuations in contaminant concentrations caused by variations in production levels, job turnover, and weather; 2) to address employee concern/complaints; 3) to determine and/or document the effectiveness of control measures; and 4) to enhance worker training on chemical substances to which they MAY be exposed.

3.0 REQUIREMENTS

3.1 HS&E Safety/Compliance Manager

a) Assure that monitoring is conducted for job locations with exposure potential.
b) Evaluate job locations when changes occur in processes or chemicals.
c) Audit and update this program as needed to assure a sound program.
d) Ensure compliance with HASP & SSHEP.

3.2 Supervisor

a) Assure that employees wear monitoring equipment properly.
b) Assure that job locations with potential exposure are brought to the attention of the Safety/Compliance Manager.

3.3 Employee

a) Properly wear monitoring equipment for the instructed time.
b) Notify the Safety/Compliance manager or your supervisor of job locations for which monitoring SHOULD be conducted.

4.0 DEFINITIONS

ACGIH – American Conference of Governmental Industrial Hygenists; establishes Threshold Limit Values (TLV's) for chemical substances.

AIHA – American Industrial Hygiene Association

Aerosols – Liquid droplets or solid particles dispersed in air that are of fine enough size (0.01 to 100 micrometers) to remain so dispersed for a period of time. Examples of aerosols are dust, mists, and fumes, which are finely dispersed particles in air.

Air – The mixture of gasses that surrounds the earth, its major components are nitrogen (78%), oxygen (21%), carbon dioxide (0.04%), and argon (0.96%).

Air monitoring – The sampling for and measurement of pollutants in the atmosphere.

Breathing Zone – An air sample collected in the breathing area (hemisphere forward of the shoulders with a radius from 6-9 inches) of a worker to asses his exposure to airborne contaminants.

Ceiling Limit (c) – The airborne concentration that SHOULD not be exceeded during any part of the working exposure. This limit is used with chemical substances that are acute health hazards and this instantaneous airborne concentration SHOULD not be exceeded.

Dusts – Solid particulates in air generated by crushing, cutting, grinding drilling, etc., organic or inorganic materials such as rock, metal, and wood.

Fumes – Minute solid particulates in air produced by the condensation of a molten metal; fumes are commonly associated with welding operations. Odorous gasses and vapors SHOULD not be called fumes.

Gas – A state of matter in which the material has very low density and viscosity; can expand and contract greatly in response to changes in temperature and pressure; and uniformly distributes itself through any container.

Liter Per Minute (lpm) – This is the flow rate usually expressed in liters per minute (lpm) which is set on the air sampling pump.

mg/m3 – Milligrams per cubic meter; a unit of measurement used to describe airborne concentrations of aerosols (dusts, mists, fumes).

Mists – Suspended liquid droplets in air generated by condensation from the gaseous to the liquid state or by breaking up a liquid into dispersed state, such as by splashing, foaming or atomizing. Mists are formed when a finely divided liquid is suspended in air.

NIOSH – National Institute for Occupational Safety and Health. This institute conducts research on occupational hazards and recommends methods and standards for dealing with them.

Permissible Exposure Limit (PEL) –The PEL is the airborne concentration permitted for the substance which (PEL) MAY not be exceeded, often average over a period of 8 hours. The PEL is a legal limit enforced by OSHA.

Particulate – A particle of solid or liquid matter in air.

PPM – Parts Per Million; parts of vapor or gas per million parts of air (by volume).

Threshold Limit Value (TLV – Established by the ACGIH, the TLV refers to an atmospheric concentration of a contaminant to which nearly all workers MAY be repeatedly exposed day after day, without adverse health effect. TLV's are not legal limits.

Time Weighted Average (TWA) – The average exposure level (atmospheric concentration of a contaminant) during a designated working period, usually eight hours. It can be calculated from either one sample or several consecutive samples collected from the breathing zone of the same employee.

Vapors – The gaseous form of substances which are normally in the solid or liquid state (at room temperature and pressure).

5.0 GENERAL SAMPLING PROCEDURE

5.1 Instruments available include Flame Ionization detectors, photoionization detectors (HNU or TIP), oxygen/LEL, hydrogen sulfide monitors, hydrogen cyanide monitors, carbon monoxide monitors, and colorimetric tubes.

5.2 Records of all direct reading monitoring will be kept on the form provided.

5.3 Personal samples will be collected to determine individual exposures per the site-safety plan or per guidance by the corporate health and safety manager. Samples will be logged on an air sample data and summary sheets log (see attachment A) and will follow laboratory chain-of-custody requirements.

5.4 Results will be posted on site or the individual sampled will be notified in writing.

5.5 Review the work area and be knowledgeable of the processes involved prior to sampling (identify the source of airborne contaminants, review Material Safety Data Sheets, interview supervisors, determine burning/scheduling rates).

5.6 Ensure all monitoring equipment is calibrated and documented in accordance to the manufacturers specification. More frequent calibration may be necessary and will be at the discretion of the compliance/safety manager.

5.7 Select the employee to be sampled and discuss the purpose of the sampling

5.8 Place the sampling equipment on the employee so that it does not interfere with work performance.

5.9 Attach the collection media (filter cassette, charcoal tubes, etc.) to the shirt collar to obtain a representative sample of the worker's breathing zone. The collection media SHOULD always be in a downward vertical position to avoid contamination.

5.10 Prepare a "blank" sample during the sampling period for each type of sample collected.

5.11 Passive diffusion sorbent badges may also be used for certain approved chemicals.

6.0 RECORDS

6.1 Exposure Records

The following records SHALL be maintained for at least 30 years past the last date of employment:

a) Personal Air Sample Data Sheets
b) Chain-of-Custody Forms
c) Laboratory Analysis Sheets

SOP Revision History

Revision	Date	Changes Summary
Revision 0	12/01/94	New
Revision 1	7/7/99	Unknown
Revision 2	7/15/04	Unknown
Revision 2	12/26/07	SOP number change
Revision 3	2/23/09	Review & minor formatting changes

Attachment A

WILLBROS ENVIRONMENTAL SERVICES
AIR SAMPLE DATA SHEET

Project Sampling Equipment

Type_____ ID No._____

Calibration_____

Sample Number	Date

Contaminant(s)	Analytical Method

Sample Type
( ) General Area
( ) Personal Name_____ SSN_____

Work Activities/Conditions

Sample Location

Pump No.	Initial Flow	Time On	Final Flow	Time Off	Average Flow	Total Time	Total Volume
	LPM		LPM		LPM	Minutes	Liters

Results
Contaminant Concentration 8-Hour
TWA

Sampling Performed By:_____

Sampling Reviewed By:_____

Attachment B

WILLBROS ENVIRONMENTAL SERVICES
AIR MONITORING SUMMARY

DATE:_____

SAMPLING LOCATION: _____

_____

WEATHER SUMMARY: _____

_____

DAILY SUMMARY: _____

_____

_____

_____

_____

_____

_____

SPECIAL CONDITIONS OR OBSERVATIONS: _____

_____

_____

_____

_____

MONITORING PERFORMED BY: _____

SUBJECT:TANK CLEANING & DECONTAMINATION		
Revision 3 5-21-08	SOP # SOP-2	PAGE 1 OF 8

1 **POLICY** - All tank cleaning and decontamination projects will be conducted according to this procedure and a corresponding site safety SSHEP and HASP plan.

2 **PURPOSE** - This procedure outlines the steps necessary to ensure the safe cleaning and decontamination of tanks.

3 **SITE ASSESSMENT**

3.1 Visually inspect the site to ensure that the work can be safely done. Special attention must be given to safe work surfaces, the presence of overhead and underground lines which may hinder equipment operation, and local traffic which may be affected.

3.2 Locate the tank, together with piping, vents, manways, energy sources, and other associated safety hazards.

3.3 If uncertain of the tank contents, sample to verify that the tank contains the indicated product. Note liquid levels. Check for the presence of water and other contaminants.

3.4 Sample the tank vapor space with appropriate monitoring equipment that will verify safe/unsafe conditions. Refer to the HSE Procedure "Air Monitoring and Sampling".

4 **SAFETY PRACTICES BEFORE CLEANING TANKS**

Process for Certification of Tanks to be "Gas Free"

4.1 Sample the tank atmosphere for flammables and oxygen. The atmosphere must be less than 10 percent of the LEL and contain between 19.5 and 23% oxygen. If the atmosphere shows flammable vapors > 10 percent LEL, then action must be taken to reduce the concentration such as ventilation or introduction of inert atmosphere.

4.2 Determination of the number and location of samples shall be determined by Willbros Corporate HS&E Manager due to the variation in projects. The Project Manager shall contact this person to describe the tank / surrounding area prior to sampling.

4.3 Sampling will only be preformed by the project On Site Supervisor or personnel specifically designated by the Corporate HS&E Manager.

4.4 Ambient background samples shall be collected upwind of the tank to be sampled.

4.5 Sampling equipment shall be calibrated prior to and again upon completion of the sampling. A "bump"/field test is acceptable on meters only if an exhaustive calibration

has been completed within a 30 day period. Documentation of calibrations is required and shall be sent to the Corporate HS&E Manager prior to sampling.

4.6 Colorimetric tube pumps shall be checked for leaks by inserting an unbroken tube and depressing the plunger. The pump is acceptable if the plunger does not expand back to its original position. Read the instructions for the colorimetric tubes for the number of strokes needed and the color change indicating a positive test. Be aware that some tube have cross-sensitivities and may cause a false readings. Colorimetric tubes detection limits vary. Consult with the Corporate HS&E Manager prior to use.

4.7 Sampling shall be completed for the following constituents:

- Benzene (utilize a colorimetric tube or meter specific for benzene)
- Oxygen & Flammable Vapors (utilize O2/LEL meter)
- Hydrogen Sulfide (utilize H2S meter or colorimetric tube)
- Carbon Monoxide (utilize CO meter or colorimetric tube)
- Total Hydrocarbons/Organics (utilize a photo ionization detector (PID))

4.8 Record Readings on the attached sheet and forward to the Corporate Health and Safety Manager.

4.9 If the tank atmosphere is greater than 10 percent LEL, one of these actions can be taken to make the tank safe for cutting.

Ventilate the Tank: This procedure only will work with clean products. (The tank will re-gas rapidly if not a clean product). Readings should be taken at the location of the tank exhaust to check for flammables. Note that exhausted vapors may be flammable, toxic, and require respiratory protection.

Clean and Ventilate the Tank: Use a cleaning method such as Butterworth spinner nozzle with hot water, pump out liquids, and then ventilate as above.

Inert the Tank: Nitrogen from a liquid nitrogen tank, or carbon dioxide from dry ice can be used to inert the atmosphere in the tank to **below the** oxygen concentration necessary for combustion. Note that flammable vapors will still be present; and once the tank is cut or opened, the inert gas can be lost. The atmosphere must be diluted to less than 8 percent oxygen by volume to be completely safe for normal petroleum products. O2 /LEL meter must be used to verify the oxygen concentration. Measurements must be made continuously. The quantity of inert gas which must be used depends on how the gas is presented to the tank. In practice, about 6 to 8 and perhaps as many as 10 tank volume would be required, depending on how the material is administered. If dry ice is used approximately, 11.5 pounds of dry ice per 100 cubic feet (15 lbs per 1,000 gallons) of tank volume is required to reduce the oxygen to 8 percent. There are several precautions which must be observed when using dry ice. The material is extremely cold - 109.3 F.

Foam the Tank: If product cannot be totally removed a method which has proven successful is to "foam" the surface of the remaining liquid with a fire fighting or vapor suppression foam. This foam blend should be 3 inches or 4 inches thick and will have the effect of suppressing vaporization of the volatile material. Foam does break down so continuous air monitoring will be needed to verify a nonflammable atmosphere and reapplication of the foam blanket may be required.

The foam must be applied through a tank opening and thus the tank must be opened. After laying the foam blanket, the tank may have to be ventilated so that the vapor flammable concentration is reduced to less than 10 percent of the LEL on the combustible gas indicator. In extreme cases, high expansion foam can be used to completely fill the tank. Obviously, no ventilation will be necessary in this case.

Tank "Gas Free" Certification Form (Revision 1 2-4-08)

Date / Time:	
Project Location / ID:	
Sample Location / ID:	
Sampled By: (On Site Supervisor)	
Equip. Calibration Date:	

Sampling Sites Specific location / Comments / Description.

Special Note 1: Background sample site must always be up wind from tank.
Special Note 2: The number and location of samples shall be determined by Willbros Corporate HS&E Manager.

Ambient Background Sample	
Tank Sample 1	
Tank Sample 2	
Tank Sample 3	
Tank Sample 4	

Sampling Readings.

	Ambient Background Sample	Tank Sample 1	Tank Sample 2	Tank Sample 3	Tank Sample 4	
Benzene:						ppm
Oxygen:						%
Flam. Vapors (LEL):						%
Hydrogen Sulfide:						ppm
Carbon Monoxide:						ppm
Total Hydrocarbons:						ppm

Process for Securing / Supporting Floating Roof Tanks Prior to Work

4.10 API standard 2015 and API recommended practice API 2016 address the hazards associated with working on and inside above ground storage tanks. API 2026 addresses safe access/egress and hazards associated with entry onto floating roofs. Each Project Manager that works in or on the tank should be familiar with the requirements of these documents and adhere to them.

4.11 All Willbros and Contractor safety procedures and policies shall apply. These would include LOTO, Confined Space, and others. Reference the specific Willbros Procedures on these as needed.

4.12 General requirements / hazards associated with this work include:

- 4.12.1 Confined Space—Respirator usage is based on conditions present however customer / site requirements may be more stringent, up to and including the use of supplied air for this task.
- 4.12.2 4-7 man crew...may vary depending on # of people in confined space
- 4.12.3 Vertical entry to space. From roof top---rescue equipment/fall protection
- 4.12.4 Ventilation needed----air mover/blower
- 4.12.5 Monitor atmosphere with LEL/O2 meter
- 4.12.6 Watch for pinch points when pulling pins
- 4.12.7 Spark proof tools/wrenches????
- 4.12.8 Make sure rain / snow is kept off the floater when roof is landed.
- 4.12.9 Suspend work if winds exceed 50 MPH or are anticipated.
- 4.12.10 No substantial work activities, materials or equipment are allowed on top of floating roof, if personnel are working underneath the floating roof. (Substantial work activity is defined as Single Piece of equip. >500lbs; Total Weight >1500lbs.)

4.13 Prior to landing a floating roof, it is recommended that the roof be examined to assess the condition of the roof and its supports. the examination should be coordinated along with the leg-repositioning if required.

4.14 The examination shall include the following actions:

- 4.14.1 Perform a visual inspection (Corrosion & Plumbness) of each of the floating roof support assemblies in-place: legs, leg pins, leg sleeves, adjacent roof deck.
- 4.14.2 Perform visual inspection of floating roof deck and internal compartments to verify that they are free of water, product, vapor or significant debris.
- 4.14.3 Inspect anti-rotation device to verify that it is structurally sound, welds are not significantly corroded or cracked.
- 4.14.4 Check the floating roof primary seal type & condition to verify the seal provides lateral restraint.

4.15 Prior to entry under the roof, the following shall be done:

4.15.1 If the floating roof lacks a reliable means of anti-rotation wedges or blocks shall be installed in the rim space in at least 4 equally spaced locations.

4.15.2 Remove floating roof manway cover plates and ladders placed near the manways (on top of deck to be used for emergency access)

Setting & Pinning Legs - Prior to entering a tank to perform the cleaning, a detailed plan for supporting the roof shall be developed by the cleaning contractor. It shall include:

4.16 Information obtained during the roof inspection so that all supports that were determined to be damaged or inadequate are identified and replacement support is incorporated into the plan.

4.17 It shall include the plan for establishing back-up supports to be installed near shell manways and floating roof manways so emergency exits are supported. A minimum of two cribbing stacks shall be installed by each shell manway used for entry.

4.18 Enter from top of tank – follow all Willbros confined space entry protocols. A specialized retrieval system called a Davit is recommended for dome roof tanks. After securing the manway, the tank should be surveyed to ensure that all visible legs are in contact with the bottom, all legs are plumb and straight.

4.19 Verify that the anti-rotation device is well attached and functioning as intended.

4.20 Check the condition of the primary seal to determine whether it is providing adequate lateral support to floating roof.

4.21 Set legs at desired height by pulling up as far as possible and give a visual inspection before sliding it down to the appropriate setting and inserting the pin threw the hole in the leg.

4.22 Insert pin into legs to secure by" Cotter pins will be placed threw the pin to ensure that it is secure.

Cribbing Procedures for Entry. Cribbing (Placement of supports under floating roof structures) is a Willbros requirement on all projects of this type.

4.23 Crib stack material requirements are hardwood 6' x 6' x 4' long. Pressure treated wood is not acceptable. These requirements can be overridden based on site specific conditions as long as acceptable documentation is provided assuring the load capabilities of the alternate materials. Cribbing should be solid, straight and free of

5.3 All vacuum equipment will need to be bonded or grounding if combustible or flammable liquids are present.

5.4 All cleaning activities should take place on the outside of the tank if at all possible; however, if this is not feasible, then a confined space permit will need to be issued prior to entry. Refer to HS&E "Confined Space Entry" Safety Procedure.

5.5 The method of cleaning will vary based on the amount and types of material to be cleaned. In general, the following types of equipment may be utilized: Vacuum trucks, pressure washer, drum vacuum, squeegee, mops, brushes, etc.

6 TANK CONTENTS REMOVAL

6.1 All products will be removed by pumping (if possible).

6.2 If the tank atmosphere is flammable, the tank shall be inerted prior to cleaning. (See section 4.9 above for additional information)

6.3 If possible, all lines will be removed by disconnecting joints rather than cutting or burning. No hot work will be performed without a hot work permit / LEL testing.

6.4 The tank will then be carefully cleaned and decontaminated.

7 TANK DECONTAMINATION

7.1 Decontamination is required to remove residue from the tank.

7.2 The decontamination area will be marked as an exclusion zone. Proper PPE, medical emergency equipment, shower, and eye wash, should be available.

7.3 Before opening the tank to permit entry for water blasting, foaming, or other cleaning methods used, verify again for the presence of flammable vapors. Confined space entry procedures apply.

7.4 Personnel will wear protective suits / respiratory protection appropriate to hazards.

7.5 Establish a method for rinse water containment and proper disposal procedures.

SOP Revision History

Revision	Date	Changes Summary
Revision 0	10/08/96	New

Revision 1	11/09/04	Unknown
Revision 2	12/26/07	SOP number change
Revision 3	5-21-08	Added HS-39 (gas free cert) and included addl info on setting legs and cribbing for floating roof tanks
		Reviewed 6-23-09 – no changes

SUBJECT: **BONDING AND GROUNDING**		
REVISION 3 5-27-09	SOP # SOP-3	PAGE 1 OF 2

1.0 POLICY

Static sparks are dangerous ignition sources wherever the air contains an ignitable mixture. Hazardous areas include near the nozzles of flammable liquid fill pipes and delivery hoses, open containers of flammable liquids, around tank truck fill openings, and drum bungholes. Flammable liquid containers should be bonded or grounded to prevent spark-ignited fires and explosions.

2.0 PURPOSE

To prevent a fire or explosion initiated by static electricity.

3.0 REQUIREMENTS

Employees who are transferring flammable liquids from one vessel to another are to use the following guidelines:

3.1 Bonding: equalizes static electricity by creating a conductive connection between two vessels.

Bonding Requirements:

- A conductive connection between the transferring container and the receiving container must exist.
- Examples of acceptable connections are: 1) a flexible conductor such as a bonding strap or wire secured to the containers; or 2) solid metal contacts between containers.

3.2 Grounding: means to dissipate static electricity into the earth to eliminate its buildup.

Grounding Requirements:

- Examples of acceptable grounding techniques are: grounding straps, cables or wires connected to known grounds such as water pipes, grounded metal structural parts of buildings and metal underground gas pipes.
- All grounding equipment should be checked periodically for effectiveness.

SOP Revision History

Revision	Date	Changes Summary
Revision 0	11/08/04	New
Revision 1	2/23/06	Unknown
Revision 2	12/26/07	SOP number change
Revision 3	5-27-09	Review & minor formatting

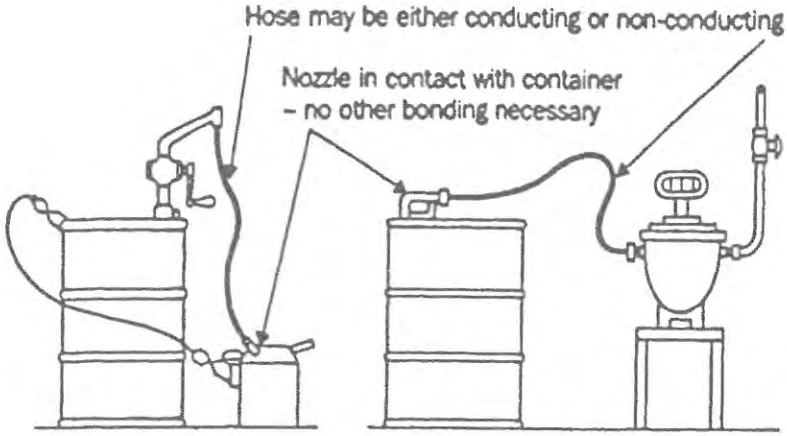

Insulating Support
10^6 OHM or more

Conducting Support
Less than 10^6 OHMS

Bond wire necessary except where containers are inherently bonded together – or arrangement is such that fill stem is always in metallic contact with receiving container during transfer.

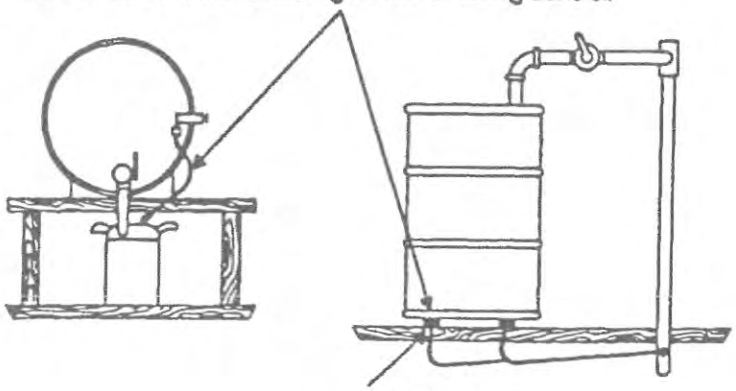

Metal strips
fastened to floor

SUBJECT: VACUUM TRUCK OPERATION		
Revision 3 2-4-08	SOP # SOP-4	PAGE 1 OF 3

1.0 POLICY

Willbros believes in proper operation of vacuum trucks to prevent injury and equipment damage. Only properly trained and licensed operators and will be permitted to operate vacuum trucks.

2.0 PURPOSE

This program is intended to provide Willbros personnel with a guideline for the safe operation, use and inspection of vacuum trucks. All activities and operations shall comply with Willbros SSHEP and HASP.

3.0 GENERAL REQUIREMENTS

- Before beginning operations operators shall conduct an inspection and complete the vacuum truck inspections form attached to this document. The inspection shall include the vacuum truck, equipment, and loading/off loading sites.
- Vacuum trucks shall be operated in accordance to manufacturers specifications.
- A Vac Truck Checklist will be filled out for all jobs involving vac truck work. The form has sections to be filled out prior to leaving for the job, on the job, and post job.
- Atmospheric air monitoring shall be conducted prior to and during operations involving hazardous materials. Be aware that environmental conditions may change during operations like wind direction, other plant operations, or a product release. Air monitoring shall be in accordance to Willbros's Air Monitoring Health and Safety standard and conducted by a qualified person. Testing shall include but may not be limited to oxygen content, flammable range, and toxicity. If monitoring reveals a toxic atmosphere where respiratory protection is required adhere to Willbros's Respiratory Protection Program. Vacuum operations shall cease if atmospheric conditions at the truck are greater then (>) 10 percent of the lower flammable limit.
- Vacuum trucks shall not enter into tank dike areas until such areas have been checked/monitored and rendered safe.
- All personnel shall leave the vacuum truck cab during loading and off-loading operations.
- All operators and assistance shall wear hearing protection while the vacuum truck is in operation.
- Vacuum truck operators shall remain positioned between the vacuum truck and the source or receiving tank, or container and within 25 feet of the vacuum truck throughout the duration.
- Vacuum truck operators shall monitor the transfer operation and be ready to quickly close the product valve and stop the pump in the event of a blocked line or release of material.
- Vacuum truck operators shall maintain proper distances when operating vacuum trucks inside facilities with restricted clearances.

- The use of a safety "T" shall be used and reachable by the work crew.
- A pressure release "spool valve" shall be in place at the line furthest away from the pressure/vacuum source.

4.0 FLAMMABLE LIQUIDS

- Transferring flammable or combustible liquids shall be conducted in vacuum hose constructed of conductive material or thick walled hose with imbedded conductive wiring. The conductive hose shall provide suitable electrical conductance less than or equal to 1 mega ohm per 100 feet. Thin walled metallic spiral-wound conductive hoses shall not be used.
- The vacuum transfer system shall be bonded to achieve a continuous conductive path from the truck through the hose and nozzle to the tank or other container and grounded to earth. Grounding may be achieved by connecting to any properly grounded object like a metal building, tank frame, a fire hydrant, or a metal light post.
- Vacuum trucks should be located upwind of the vapor source.
- Vacuum pump vapors should be vented to areas free of ignition sources. Extending exhaust stacks or attaching additional hose can achieve venting.
- Vacuum pumps and blowers operated at high speeds may produce high discharge temperatures or concentrations so continuous atmospheric monitoring is critical.
- Smoking shall not be permitted within at least 100 feet of the truck, the discharge of the vacuum pump, or any other vapor source.

5.0 TRAINING

- Vacuum truck operators shall be trained. Training will consist of a review of the operations manual provided by the manufacturer. A written test shall be completed to verify that the information was retained.
- A minimum of three days of operation under the direct supervision of a trained operator who has a good safety record. The trained operator must be satisfied with this performance until they are permitted to operate the vacuum truck alone.
- Vacuum truck operators must be trained to be aware of the effect of speeds, turns and the changing center of gravity.
- Vacuum truck operators shall be trained in the potential hazards associated with petroleum facilities such as sources of ignition, flammable atmospheres, toxic vapors, slips and falls, fires and explosions, and driving safety. They should be trained in the hazards of petroleum products, by-products, wastes and materials being transferred, and government and facility safety procedures.

Please reference Vacuum Truck Operators training manual (See example attached) for additional information: Vacuum Truck Operations Training Manual

SOP Revision History

Revision	Date	Changes Summary
Revision 0	3/12/1997	New
Revision 1	3/27/2007	Unknown
Revision 2	12/21/07	SOP Number Change
Revision 3	2-4-08	Added training manual link– updated header
Revision 4	11-21-08	Added general bullet 3 – vac truck checklist

SUBJECT:	WATER BLASTING		
REVISION 4	9-14-09	SOP # SOP-5	PAGE 1 OF 15

1.0 POLICY

Willbros water blasting projects will be run in a safe, organized method to prevent injuries.

2.0 PURPOSE

Provide general information on the safe operation of water blasting for Willbros Environmental projects. The purpose of the Health & Safety Program is to improve Willbros's Safety Awareness by increasing the hazard analysis of the all activities having the highest potential of serious injury and/or death.

3.0 SCOPE

Water blasting, sometimes referred to also as hydro blasting or water jetting, is a rapidly growing and ever changing industry. If contractors, supervisors, field representatives, or operators have any questions in the area of high-pressure water operations; they should refer to ASTM E1575-08 industry standard or contact Willbros Corporate Compliance. Water blasting is the operation of high-powered water jets as normally used in construction, maintenance, drilling, metal, industrial, environmental, and demolition work. These high-pressure jets are used for both their cleaning and cutting applications.

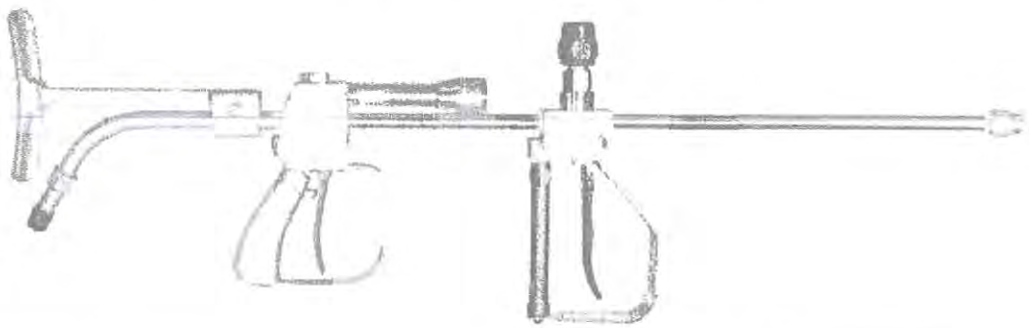

Prior to starting a high-pressure operation, make sure that all components are rated for the correct operating pressure. The system is "only as strong as its weakest link." Never modify (i.e., cut, weld, mold, file, etc.) or use any component that has been modified, without written approval from the manufacturer. Manufacturer guidelines have been set for your safety and they should be respected and followed.

Water blasting is now the preferred method of industrial cleaning in oil refineries, steel mills, chemical plants, airports, and automotive plants worldwide. It is an efficient and cost effective method of remediation. But, if done incorrectly, can be very dangerous. Take the time to follow the company and manufacturer safety procedures.

NO JOB IS SO IMPORTANT THAT YOUR SAFETY OR THE SAFETY OF OTHERS SHOULD BE COMPROMISED.

LEVELS OF WATERBLAST PROJECTS

- ***Low Pressure Cutting/Cleaning Operations: Systems pressure does not exceed 3,500 psi.***
  Used in applications such as: removal of unwanted matter from surfaces and/or cut surface material. These operations can be performed with or without the addition of other liquids or solid particles to the water jet stream. These operations are usually performed in situations where the material that is to be removed has not bonded to the product.

- ***Standard Pressure Cutting/Cleaning Operations: Systems pressure 3,500-20,000 psi.***
  These operations are usually performed in situations where extremely heavy "build ups" have formed on particular products. These build ups include: scale, rust, tar, rubber, paint, epoxies, etc. For pressures up to and including 20,000 psi the use of National Pipe Thread (NPT) fittings are recommended. NPT fittings, along with the use of Teflon tape, will provide a quality, leak-proof seal suitable for high pressure operations. These operations can be performed with or without the addition of other liquid or solid particles to the water jet stream.

- ***Ultra-High Pressure Cutting/Cleaning Operations: Systems pressure exceeds 20,000 psi.***
  These operations are usually performed in cutting, stripping, and molding projects. These ultra-high pressures require the use of a cone or soft seat fitting. These fittings will allow the seal to be contained within the component itself, this will provide added protection against rupture. An anti-seize lubricant, along with the soft seat fitting, should be used in all connectors rated at, or above 20,000 psi. These operations can be performed with or without the addition of other liquid or solid particles to the water jet stream.

4.0 RESPONSIBILITIES

Water Jet Crew

All employees engaged in water blasting activities **MUST** be properly trained and qualified before beginning any high-pressure operation. A qualified employee is defined as: personnel who have undergone a proper training program and who have demonstrated the knowledge, skill and experience to perform all likely tasks, and shall operate high pressure water jet equipment. During any project, the correct application of the water blasting equipment is the responsibility of the water jet crew. The crew consists of the following members:

The Nozzle Operator:

- Controls the action of the high-powered jets through the use of a control gun, foot valve or delivery hose. The Nozzle Operator shall Always be responsible for the safety (or foot) valve control.
- Completes the final safety check on the water blasting components.
- Relays information to the other crewmembers as to the progress of the project.
- Is responsible for ensuring that the work area is maintained during water jet operation.

The Pump Operator:

- Monitors the pump while the system is energized and the nozzle operator is blasting.
- Remains with pump and maintains visual contact / communication with the nozzle operator at all times.
- Performs daily maintenance on the unit.
- Alerts co-workers of the hazards involved with the project.
- Keeps visitors clear of the immediate area.
- Makes the necessary adjustments to the water blast equipment during the project.
- Quickly shuts down a project if the nozzle operator is in danger or conditions have become **UNSAFE**.

The Crew Leader:

- Takes responsibility for the overall quality of the project.
- Appropriates all necessary permits for the project (i.e., hot work, confined space, lock-out/tag-out, etc.)
- Reviews the site safety program with crew and assures it is followed.
- Administers first aid to a crewmember in case of injury.
- Schedules a regular change in tasks for the members of the crew; keeping operators from becoming fatigued.

NOTE: Although single person operations are not recommended, they can be performed when the pump pressure does not exceed 3,500 psi, and the flow of the system is less than ten gallons per minute.

Project Start-up Procedures

Every water blast site has its own unique characteristics; therefore, each member of the water jet crew shall review every project. High-pressure operations must be secured with barricade tape and other appropriate warning signs. It might be necessary to have this barricaded area inspected by the contractor or another field representative, for their approval. Exit points for hoses and lances must also be barricaded or shielded. The appropriate pre-operational

procedures must be followed before beginning any high-pressure operation. Prior to high-pressure operations, the project should be:

- **Pre-planned** to ensure that personnel are familiar with the equipment, work area, and method of cleaning that will be implemented on the project.
- **Monitored** for potential hazards.
- **Barricaded / Shielded** to enclose potential hazardous areas (barricades may be safety tape, rope, wire, barrels, etc., as long as it is highly visible).
- **Inspected for defects** in the hoses, lances, fittings, couplings, nozzles, etc.
- **Flushed** to clean the system of debris that might clog the components.
- **Pressurized slowly** to inspect the system for leaks and/or other faulty components.

Project Shutdown Procedures

The temporary shutdown of a project might be necessary if certain conditions arise. **Water blasting projects should be shutdown if:**

- An unauthorized visitor enters the barricaded area.
- Severe weather changes or other hazardous conditions are detected.
- An alarm is sounded within the plant, refinery, or area in which the project is being performed.
- **ANY** crewmember feels that the project has become **UNSAFE**.

Required PPE for Water blasting

OSHA requires PPE be selected based upon the associated hazards of the work. The following is the minimum PPE to be worn while water blasting:

- **Hard Hat:** hard hats or appropriate helmets that meet American National Standards Institute (ANSI) head protection standards should provide Physical protection of the head. Their selection must be based on acceptable integration with protective clothing and respirators.
- **Safety Glasses with Side Shields**
- **Heavy Non-Slip Gloves:** Hands are the part of the body most likely to come in contact with chemicals. Gloves come in different materials and thickness. The ability of the gloves to withstand chemical and physical hazards is very important.
- **Metatarsal Boots:** Steel-toed boots that are made of chemical resistant materials and provide added protection to the top of the foot and shin.
- **Face Shields:** In situations where full-face respirators are not used, face shields are used to protect the face from chemicals and debris.
- **Rain Gear:** This will not provide full and complete body protection. However, they do provide additional splash protection when used with non-encapsulating suits.

- **Hearing Protection:**
- Additional PPE that might be required while water blasting may include:
  - Fire retardant clothing (FRC)
  - Chemical goggles
  - Respiratory protection
  - Full body harness and lanyard
  - Long cotton underwear
  - Chemical resistant inner gloves
  - Chemical resistant outer gloves/boots
  - Two way radio communications
  - Escape mask

NOTE: <u>Use of two or more waster blasters in the same area is discouraged</u>. If this practice is warranted an additional risk assessment shall be made by the supervisor and additional PPE requirements shall be considered.

- **Water Blasting with pressures or 3,500 psi or greater needs to be evaluated for the following additional Personal Protective Equipment. It is the supervisor's responsibility to assess the specific job hazard. It is the supervisor's responsibility to justify this decision on waterblaster / safe work permit paperwork prior to work. If engineering controls are not available to control potential hazards all additional PPE shall be utilized.**
  - Wet Suit / Rain Suit / Heavy Duty Slicker
  - Kevlar plated protective suits, sometimes referred to as "Turtle Skin Suits" which serve as a segmented panel personal armor system that protects the feet, legs, chest, and arms. This suit is comprised of three components that are worn on top of a standard wet suit.
    - Gaiter: Protects feet, shins, toes, and insteps
    - Gauntlet: Protects wrist, forearm, and back of hand
    - Body Suit: Protects chest, torso, upper legs, and lower legs

NOTE: It is the responsibility of the Crew Leader to ensure that the Kevlar Plated Personal Protective Suit is rated to protect at the pressure level utilized on the water blasting unit.

NOTE: Inadequate or incorrect protection can result in serious injury, so a "safety first" approach in choosing protective equipment is in order.

<u>In-Use Monitoring</u>

When you are wearing PPE you should be alert for any of the following conditions:

- Signs that the protective ensemble has been degraded in any way.

- Notice of chemical odors and Signs that it is becoming more difficult to breathe.
- Notice of skin irritation.
- Interference with your ability to see clearly.
- Your ability to move has been restricted.
- Sense of discomfort, rapid pulse, nausea, or chest pain.

Inspection and Maintenance

When working with pressures that are involved in water blasting, valves and seating surfaces encounter a high amount of daily wear. Therefore, these items require frequent inspections, maintenance, and replacement to ensure proper operation. All fittings should be compatible in size, thread, and pressure rating to coincide with the other components of the high-pressure unit.

Loose or leaking couplings should be either replaced or repaired immediately. Failure to correct these faulty fittings will cause unnecessary wear on the systems pump. This will eventually lead to system over-pressurization, ultimately causing system failure. If a leak is detected after the project has started, the pump must be shut down before the repair can be made. **NEVER ATTEMPT TO REPAIR A LEAK WHILE THE SYSTEM'S PUMP IS ENERGIZED!** This greatly increases the chance of rupture or burst in the system while the operator is in a vulnerable position.

Checklists and written records are needed. There are different types of inspections:

- Inspection and testing of new equipment.
- Inspection of equipment at the time it is issued to workers.
- Inspection after use.
- Periodic inspection of stored equipment.
- Inspection when problems are reported.

Please see Water blasting Checklist attached.

CAUTION: The responsibility to inspect PPE must be assigned to a specific qualified person. Workers should know how to do a basic equipment inspection.

5.0 REQUIREMENTS

PUMP SAFETY

Safety Release Devices

The pump is the single most important component of the high-pressure water system. It is generally referred to as the "heart" of the unit. Knowing this, it is obvious that the care and maintenance of the pump is vital to the effectiveness of the project. The pump is equipped with four safety release devices that protect the system against over-pressurization.

- *Automatic Regulating Valve - Valve used to automatically control the working pressure of the pump by controlling the water flow. When the pump exceeds a set value, the valve will partially open. As the valve opens further, more water is bypassed from the nozzle to the supply reservoir. This valve is sometimes referred to as an "unloading valve."*
- *Rupture (Burst) Disc - This is a metal disc held in a specially designed holder that will fail when the pressure applied exceeds a preset limit. Discs are usually different sizes to accommodate the various pressures that are discharged from the pump. A rupture disc is the main safety release device and is designed to relieve 100% of the systems pressure.*
- *Pressure Relief Valve - This valve is spring-loaded and held in the closed position during normal operations. The device is designed to open when the system's pressure exceeds a preset limit. This valve is commonly referred to as a "pop-off" valve. The pressure relief valve is the main back up to the rupture disc.*
- *Bypass Valve - This valve is used to set the operating pressure, either manually or automatically, which controls the jet stream issuing from the nozzle. The valve also, "bypasses" unused water flow to the regulating tank. This conserves the amount of water that is used during the project.*

NOTE: The above-mentioned safety devices serve as warning signs against system failure. All members of the water jet crew should be familiarized with these safety features. These devices should be inspected and tagged on a regular basis to ensure that they are in proper working condition.

Gauges

The gauge is another very important feature of the high-pressure pump and is crucial to maintaining control of the system's pressure. A properly working gauge should:

- Be highly visible for the operators.
- Have a scale range of at least 50% above maximum working pressure.
- Be liquid-filled for a steady and accurate reading.
- Be equipped with a safety snubber.

NOTE: A snubber absorbs the hydraulic shock and allows the gauge to display a more accurate reading. The snubber provides the gauge protection against wear and gives it a longer operating life.

Filters

Filters and strainers should be checked regularly to ensure that they are not blocked or damaged. The pump operator should take the time to examine, change, or clean the filters to ensure that solid particles, which might clog the nozzle orifices, have not escaped the filter. These solid particles can damage the valves, nozzles, and connections making the pump run poorly. Filters and strainers should be checked on a regular basis, but especially so, when the quality of the water supply is

poor. The manufacturer's recommendation should be followed when setting a maintenance schedule. Filters should be adequately sized as to collect any particles that might block the smallest opening in the system.

FITTING SAFETY

Fittings (sometimes called valves or couplings) are the links that tie the components of the high-pressure system together. All fittings must be cleaned before installing in the system. Also, be sure that all fittings are leak-free and pressure rated for the appropriate application. Never use damaged or corroded fittings. The use of a brass or cast iron fitting is also not recommended. Manufacturers suggest the use of a reinforced stainless steel fitting for all high-pressure applications. The seal that the fitting provides is crucial to the safety of the project.

HOSE SAFETY

Components

High-pressure hose is a flexible hose that can be used to carry water and/or other abrasives from one part of the high-pressure water jetting system to another. The high-pressure hose consists of:

- A rubber or plastic core.
- Reinforced high tensile steel wires.
- A protective covering.
- Pressure tested end fittings.

As an added safety feature, the hose shall be equipped with a **hose shroud assembly near the operator.** A hose shroud is a length of flexible material, usually formed into a tube around a hose end coupling across the connection to the jetting gun. The shroud provides some instantaneous protection should the hose rupture. **The shroud will not form a permanent barrier to the flow of water from a damaged hose.**

Damage/Defects

Due to the heavy amount of friction that is caused by water blasting, the hose is constantly subjected to wear and damage. The condition of the high-pressure hose is critical to the safety of not only the water jet crew, but to everyone in the general vicinity of the water blast project. Barricades should be made so that all hoses are protected from being run over and crushed by vehicles, forklift trucks, etc. If a hose is run over while energized it will over pressurize and could rupture immediately. The hose should also be laid out to avoid unnecessary wear.

Prior to each operation, the hose should be inspected for certain visual defects. The hose should be discarded if:

- Steel or fiber wires are frayed or broken.
- The protective covering has blisters or bulges.

- The hose is crushed or kinked.
- End fittings are damaged.

Along with the above-mentioned visual defects, there are two non-visual defects that should result in the hose being discarded. The hose should be discarded if:

- The hose has been subjected to pressures exceeding 50% above maximum working pressure.
- The hose is more than three years old regardless of its condition.

NOTE: High-pressure hoses should be flushed with low pressure water before beginning operation.

Whip Checks

Hoses must also have whip checks in case of hose failure. A whip check is a length of cable, wire, or nylon that bridges the different links of high-pressure hose. Opening each end and looping them over the hose's end fittings install whip checks. This will prevent the hose from "whipping" in case of coupling failure. **Whip checks are the water jet crew's #1 safety defense against high-pressure accidents.**

NOTE: Nylon Whip Checks are a better option over wire / cable whip checks due to potential injury when handling when they become abraded. Nylon is also easier to cut away / replace.

End Fittings

The final components of the high-pressure hose are the end fittings (couplings). The couplings are used to connect several links of high-pressure hose. Like all water blast components, couplings must be rated and tested for the appropriate operating pressure. Couplings generally fall under two categories - Screw (quick) type or Ball (hammer) style

NOTE: It is important to remember that couplings are safe only when whip checks are in place.

SURFACE CLEANING SAFETY

Control Gun (Shotgun)

Surface cleaning is the use of high-pressure water to clean the unwanted deposits of materials from a given surface. The most common method of surface cleaning is performed through the use of a control gun (commonly referred to as a shotgun). Shot gunning is defined as a hand-held application whereby an assembly of a lance and a nozzle can be manually manipulated in virtually all planes of operation. A properly working shotgun should:

- **Be equipped with a double trigger double dump valve guard and safety latch.** The trigger should be easy for the operator to control while wearing gloves. The safety latch will "lock out" the gun and prevent accidental actuation. (See safety note below)

- **Have a shrouded whip hose.**
- **Be as light as possible.** (This will reduce operator fatigue. Also, it will give the operator a greater sense of mobility and balance.)
- **Be at least 66 inches in length from the tip of the nozzle to the butt of the barrel.** (This is the recommended safe distance between the operator and the high-powered water jets.)
- **Have a nozzle assembly.** (This is the support that will hold one or more nozzles in place while water blasting sometimes referred to as nozzle holder.)
- **Have a lance section.** (This is a length of pipe / lance that is used to extend the gun reach.)
- **Have a shoulder stock.** (To give the operator support while engaged in water blasting.)

NOTE: Some control guns feature dual action triggers. These double trigger guns require that the operator, one by each hand, activate two triggers in order to generate high-pressure water. This style of gun will provide the operator with maximum safety while surface cleaning.

Surface Preparation

The work surface itself, must meet certain specifications before activities can take place. The area:

- Should not be so large that the high-pressure hose has to be stretched or twisted.
- If located four or more feet above the ground, must have the OSHA approved scaffolding constructed. (**NEVER WATERBLAST FROM A LADDER!!**)
- Must be free of any obstacles (hoses, air lines, pipes, etc.) that might hinder movement.
- Should be cleared of any debris that might be projected through the air if struck by the high powered jet stream (practice good housekeeping).

Nozzles

The nozzle (commonly called the tip) is the device that discharges the water from the system. It restricts water flow, accelerating the force and shaping it to the required flow pattern. There are three major types of nozzles used in water blasting operations.

- Straight Tip: The straight tip exits from a circular orifice and is used to carry great force to the target with a minimal displacement of water. Straight tips are typically used for their cutting power or to clean extremely hardened materials. A straight tip is also known as a zero degree jet or a "hard hitter."
- Fan Tip: The fan tip has a greater coverage, than the straight tip, as it is designed to spread out as it exits the orifice. The degree at which the jet tapers out from the central axis is often used to designate the jet produced. These tips are often used to clean larger areas requiring less energy to remove unwanted matter.
- Surface Spin Tip: A tip that is set in the opposite direction of the nozzle's motion. The spin jet is used to provide force to move the nozzle into the object (tube, pipe, silo, etc.)

that is to be cleaned. The use of this jet allows the operator to clean in otherwise inaccessible location.

TUBE CLEANING - Tube cleaning consists of inserting a rigid or flexible lance, with an affixed nozzle, into a tube, pipe, or drain, to clean the inner diameter. This method of cleaning uses self-propelling nozzles that allow the operator to clean these hard to reach areas. The nozzles are propelled because of specially designed orifices, or openings (cutters, pullers, polishers, etc.) That advance the lance through the tube.

There must always be proper clearance when line moleing a tube, pipe, drain, etc. Clearance is the distance between the outside diameter of the lance and nozzle and the inside wall of the item that is being cleaned. This clearance will allow adequate washout of water and debris while preventing the jets from reversing its direction.

Whip hose, as in all methods of water blasting, must be used during tube cleaning operations. The whip hose will prevent bending or kinking near the foot gun, which could prove especially hazardous to the nozzle operator.

Lances - The lances used in tube cleaning fall under two categories.

Flex Lance

The flex lance is a length of flexible, tubular material that is used to line mole in areas with a small amount of space. The use of a flex lance gives the operator a greater sense of mobility while line moleing. The flex lance consists of:

- A steel core.
- A protective covering.
- High strength reinforcing wires.
- High-pressure end fittings.

As mentioned in the section on Hose Safety, the flex lance should be checked for certain visual defects. The flex lance should be discarded if it has:

- Kinks
- Bends
- Crushed spots.
- A damaged protective covering
- Loose or leaking end fittings.
- If any of the above mentioned conditions exist then lance failure may occur.

For additional protection while flex lancing, a stainless steel rod ("stinger") is inserted into the nozzle. The stinger acts as a safety guard between the operator and the high-pressure jets. A lance safety grip (hand guard) with an anti-withdrawal device (horse shoe washer) shall be used and sized appropriate to the nozzle fitting to prevent hydraulicing out of the tube.

Rigid Lance

A rigid or stiff lance is a seamless length of tubular steel, which gives the lance a hard or stiff quality. Stainless steel is the recommended material for rigid lances. The rigid lance is used

for extremely hard to clean tubes with large amounts of build up. As with flex lances, it is important to examine rigid lances for defects. The rigid lance should be discarded it has Kinks, Bends, Crushed Spots, Damaged Threads, or Scale Build-Up.

In many rigid lancing operations, extensions are required to reach the entire length of the tube, pipe, drain, etc. The length of the rigid lance (including the series of extensions) shall not be so large that the operator cannot control the lance. If the lance has exceeded the length that the operator can control, then a second operator shall be used to assist in controlling the lance. Six (6) feet is the maximum length of lance that one operator can safely handle.

Foot Controlled Valve (Foot Gun)

The most common method of controlling pressure while tube cleaning is through the use of a foot-controlled valve (or foot gun). A foot gun allows the nozzle operator to safely control the water jets while keeping his/her hands free to operate. A properly working foot valve (foot gun) must have:

- A freely moving pedal that is clear from any obstructions.
- A low pedal force to reduce operator fatigue.
- A protective guard to prevent accidental actuation.
- The durability to handle daily operations.
- Nozzle Operator Shall Be In Control Of Foot Valve At All Times

NOTE: When performing a two-man line cleaning operation, the individual who is inserting the nozzle MUST also control the foot valve.

Line Moleing Operations

To be added at a later time

ACCIDENTS/PERSONAL INJURY

First Aid Procedures

All accidents are preventable. However, should an injury or other harmful situations occur, certain steps must be taken in the event of a high-pressure emergency. All injuries must be reported to a field supervisor immediately. The operator must never **ASSUME** that the injury is not severe. Non-medical personnel may not necessarily see the full extent of the injury, particularly internal damage. Even though certain water cuts may not leave a large surface wound, the fluid path that the water takes may spread chemical contaminants or bacteria through the body. If not monitored correctly, this exposure can lead to infections, internal organ damage, or even death.

Medical Emergency Card

In the event of an injury involving a high-pressure water cut, the injured person must be taken to a hospital immediately. To ensure that the doctor knows and fully understands the nature of the injury, all water jet operators should carry a precautionary medical emergency card. This card should be waterproof and easily accessible for the hospital staff. It should also list the chemical material involved on the project and the pressures that the operator was exposed to. This is an example of a medical card that might be found in the field:

This person has been involved with high-pressure water jets.
Please take this into account when making your diagnosis:

Unusual irritations have been reported to occur when lead based organisms enter the body under the working pressures and temperatures that were present at the time of the incident. These organisms may act as a facial pallor, cause anemia, or lead to kidney disease. Respiratory support might be necessary.

SUMMARY

It is impossible to list all rules and procedures for every situation that can be encountered while water blasting; therefore, it is important that individuals working in this industry:

- Exhibit individual responsibility for safety awareness and use good judgment in performing their jobs. ***(If It Is Unsafe – Stop Work!!)***
- Ask the immediate supervisor if any questions exist as to the appropriate safety practices.
- Alert other crewmembers of situations that you detect as possibly harmful.
- Follow all applicable safety procedures and guidelines for the facility where the operations are being conducted (i.e., refineries, steel mills, auto factories, chemical plants, etc.)
- Inspect all tools before using.
- Respect all warning signs and other barricades.

Water blasting is one of the most efficient and cost effective methods of industrial cleaning. However, if performed incorrectly, it can be extremely dangerous. Take the time to learn and follow all company and manufacturer safety procedures. **YOUR SAFETY COMES FIRST!**

SOP Revision History

Revision	Date	Changes Summary
Revision 0	3/12/97	New
Revision 1	5/09/07	Unknown
Revision 2	12/21/07	SOP number change
Revision 3	12/17/08	Unknown
Revision 4	9-14-09	Complete Re-write
Revision 5	12-07-09	Updated blaster picture (double handle)

WATERBLASTING SAFETY CHECKLIST (Revision Date 9-14-09)

Date:_____ Job#:_____ Location:_____

Equipment Being Cleaned:_____

	WATERBLASTING SAFETY CHECKLIST	YES	NO	N/A
1	Is the area, including other end of unit being serviced, cleaned, roped off, and are proper safety signs posted?			
2	Have precautions been taken to protect electrical equipment from water?			
3	Is there any hazard to personnel from possible damage to equipment such as release of corrosive chemicals, flammable liquids or gases, etc.?			
4	Are all fittings of the correct pressure rating?			
5	Are all hoses of the correct pressure rating?			
6	Are all hoses in good operating condition?			
7	Are all fittings in good operating condition?			
8	Are all nozzles free from plugging? And in good operating condition?			
9	Have precautions been taken to prevent linemole reversal? Is stinger length a minimum of 1.5 times the diameter of the pipe?			
10	Is the filter on the pump suction clean and in good operating condition?			
11	Is there a minimum of 20 PSIG fresh clean water supply at pump suction?			
12	Have precautions been taken against freezing?			
13	Do all personnel have the proper safety equipment for this job?			
14	Do all personnel have the proper safety training for this job?			
15	Are all personnel qualified to perform this work?			
16	Are explosive or flammable vapors possible and are monitoring provisions established?			
17	If answer to 16 is "yes", do not use de-mineralized water or condensate and ground lance to equipment being cleaned.			
18	Is there any danger from the wastewater or from the reaction of the scale and water?			
19	If answer to 18 is "yes", has proper personal protective equipment been supplied to prevent injury, and has personnel been informed of this additional hazard?			
20	Has complete hook-up been flushed prior to installing nozzle?			
21	Has hook-up, including pipes, hoses and connections, been pressure tested with water at maximum operating pressure?			
22	Is dump system operating properly? (Will it dump when released?)			
23	Are safety systems operational?			
24	Has the job site been examined to determine if Confined Space Entry Requirement apply?			
25	Has all relevant moving equipment, such as conveyors, choppers, mixers, etc., been mechanically or electrically disabled with an appropriate lockout procedure?			
26	Has job been examined for environmental considerations, with action as appropriate?			
27	If flex lancing - has the hose been marked at least 24" from the nozzle to warn operator of the nozzle location?			
28	If flex lancing - is there sufficient space to allow washout of debris and water?			
29	If flex lancing - is the length of nozzle and coupling greater than inside diameter of the pipe?			
30	If flex lancing - have precautions, including the use of a nozzle support (stinger), been put in place?			

Supervisor Signature:_____

Employee Signatures:_____ _____

_____ _____

APPENDIX E PROJECT

PROCEDURES –
NON-DESTRUCTIVE TESTING (NDE)

- **MT-3 MAGNETIC PARTICLE INSPECTION**
- **LT-1 VACUUM BOX LEAK TEST INSPECTION**
- **PT-1 LIQUID PENETRANT INSPECTION**
- **NDT-3 PRESSURE TEST PROCEDURE**

Distribution is limited to US Government agencies and their contractors; administrative/operational use within the context of this project. Other request shall be referred to the Naval Facilities Engineering Service Center.

WILLBROS GOVERNMENT SERVICES (U.S.), LLC

A WILLBROS COMPANY

NON-DESTRUCTIVE TESTING PROCEDURE

MT-3

MAGNETIC PARTICLE INSPECTION

BY

YOKE TECHNIQUE
WET FLUORESCENT
MAGNETIC PARTICLE METHOD

Dated September 29, 2014

Rev	Description	Reviewed	Approved
0	Approved	JS	JH
1			
2			
3			
4			
5			

Magnetic Particle Examination
Dated September 29, 2014

Table of Contents
Yoke Technique
Wet Fluorescent
Magnetic Particle Method

I. Introduction

II. Scope

III. Applicable Reference Specifications

IV. Surface Conditions
- **4.1 As Welded**
- **4.2 Dirt, Grease & Lent**
- **4.3 Cleaning**

V. Inspection Method

VI. Inspection Technique

VII. Calibration

VIII. Application of Inspection
- **8.1 Source of Current**
- **8.2 Equipment**
- **8.3 Wet Fluorescent Magnetic Particle**
- **8.4 Inspection Sequence**

IX. Evaluation

X. Precautions

XI. Demagnetization

XII. Final Cleaning

XIII. Reports

XIV. Acceptance/Rejection Standards

XV. Certification of Competence for NDE Personnel

Magnetic Particle Examination
Yoke Technique
Wet Fluorescent
Magnetic Particle Method

I. Introduction

The wet fluorescent magnetic particle examination method may be applied to detect cracks and other discontinuities on or near the surface of ferromagnetic materials. Wet Fluorescent magnetic particles, which must be used with a black light, can locate very fine surface flaws or slightly sub-surface discontinuities, such as inclusions, seams, shrink cracks, tears, laps, flakes, and grinding, quenching or fatigue cracks.

II. Scope

The wet fluorescent magnetic particle testing method is generally more sensitive than the dry because the suspension provides the particles with more mobility and makes it possible for smaller particles to be used since dust and adherence to surface contamination is reduced or eliminated. The wet method also makes it easy to apply the particles uniformly to a relatively large area.

III. Applicable Reference Specifications

ASME CODE, SECTION V	Nondestructive Examination
ASTM A275	Magnetic Particle Examination and Inspection of Heavy Steel Forgings
ASTM E709	Standard Recommended Practice for

	Magnetic Particle Examination
ASME CODE, SECTION VIII	Boiler and Pressure Vessel Code, Div. 1
MIL-I-6868	Military Specification Magnetic Particle Examination

IV. Surface Conditions

4.1 As Welded satisfactory results are usually obtained when the surfaces are in the as welded, as rolled, as cast, or as forged condition.

4.2 Dirt, Grease, Lint, Etc. – Prior to Magnetic Particle Examination the surface to be examined and all adjacent areas within at least 1" shall be dry and free of all dirt, grease, lint, scale, welding flux and spatter, oil or other extraneous matter that could interfere with the examination.

4.3 Cleaning – Cleaning may be accomplished using detergents, organic solvent, descaling solutions, paint remover, vapor degreasing, sand or grit blasting, or ultrasonic cleaning method.

V. Inspection Method

The magnetizing force should be applied and then the suspension of magnetic particles is gently sprayed or flowed over the surface to be tested.

VI. Inspection Technique

The poles are first pressed against the test area. When the AC yoke is energized, a longitudinal magnetic field is induced in the part between the poles sufficient to carry out a local magnetic particle examination. This yoke

technique utilizes wet fluorescent magnetic particle materials due to better particle mobility. Proper yoke examination entails a second placement with the yoke rotated approximately 90 degrees from the first placement to assure that all existing discontinuities are revealed. Depending on the surface coverage requirements, overlap between successive yoke placements may be necessary.

VII. Calibration Frequency

7.1 Each piece of magnetizing equipment shall be calibrated every six months or when the equipment has been subject to major electric repair, periodic overhaul, or damage.

7.2 The AC electromagnetic yoke shall have a lifting force of at least 10 lb. At a pole spacing of 2 to 4 inches and shall be checked with a 10 lb steel weight.

VIII. Application of Inspection

8.1 An AC yoke shall be used for localized longitudinal magnetization when inspecting with portable equipment over large areas such as castings, welds, wrought, and forged surface.

8.2 Suspension liquids used in the wet fluorescent magnetic particle inspection method can be either a well refined light petroleum distillate or water containing additives. Water-based carriers must contain wetting agents to disrupt surface films of oil that may exist on

the part and to aid in the dispersion of magnetic particles in the carrier. The concentration of particles in wet fluorescent magnetic particle suspension is a very important parameter in the inspection process and must be closely controlled. The particle concentration is checked after the suspension is prepared and regularly monitored as part of the quality system checks.

8.3 Wet Fluorescent particles are coated with pigments that fluoresce when exposed to ultraviolet light. Particles that fluoresce green-yellow are most common to take advantage of the peak color sensitivity of the eye but other fluorescent colors are also available.

8.4 Inspection Sequence

8.4.1 Pole spacing for the yoke will be from 3 inches minimum to 6 inches maximum.

8.4.2 While keeping the yoke energized, gently spray or flow the suspension over the area between the poles.

8.4.3 Inspect for Indications - Look for areas where the magnetic particles are clustered. Surface discontinuities will produce a sharp indication. The indications from subsurface flaws will be less defined and lose definition as depth increases.

8.4.4 Interpretation of Indications - Shall be made with ultraviolet light or "black light". When fluorescent particles are used, special ultraviolet light must be used. The desired wavelength

range for use in nondestructive testing is between 3,500 and 3,800A with a peak wavelength at about 3,650A.

8.4.5 Repeat steps at 90 degrees to the centerline.

8.4.6 Direction of Magnetization – At least two separate examinations shall be performed on each area. During the second examination, the lines of magnetic flux shall be approximately perpendicular to those used during the first examination.

8.4.7 Examination Coverage – All examinations shall be conducted with sufficient overlap to assure 100% coverage.

8.4.8 Magnetizing Field Adequacy – When it is necessary to verify the adequate direction of the magnetizing field, the magnetic particle field indicator shall be used by positioning the indicator on the surface to be examined. When using the indicator, a suitable flux or field strength is indicated when a clearly defined line of magnetic particles forms across the copper face of the indicator when the magnetic particles are applied simultaneously with the magnetizing force.

IX. Evaluation

9.1 All valid indications formed by wet fluorescent magnetic particle examination are the result of magnetic flux leakage fields. Indications may be relevant or nonrelevant. Indications caused by particles being held by nonmagnetic forces are false. Examples include particles

lying in the depression at the side of a weld, or particles wedged into rust or scale on the surface.

9.2 Flux leakage fields that are the result of discontinuities that may or may not be acceptable produce relevant indications. Relevant indications will be evaluated with regard to the applicable standard or code specified in the contract.

9.3 Nonrelevant indications can occur singly or in patterns as a result of flux leakage fields created by conditions such as changes in section, inherent material properties, etc. or may be associated with a discontinuity which is not considered detrimental to the part.

X. Precautions

Precautions for personnel safety and misinterpretation of discontinuities shall be:

10.1 Nonrelevant of false indications often appear but are usually able to be identified.

10.1.1 Line like indications may appear at the junction of two metals of different permeability or at the boundary of the weld and base metal or in a material with a banded microstructure.

10.1.2 Cold worked surface will often develop broad indications if there is an abrupt change in permeability.

10.1.3 Flow from forging or rolling will appear as many groups of parallel indications caused by magnetization far beyond that required for flaw location.

10.1.4 Broad areas of particle accumulation, which might mask indications from discontinuities, are prohibited and such areas will be cleaned and reexamined.

XI. Demagnetization

When residual magnetism in the part could interfere with subsequent processing or usage, the part shall be demagnetized by one of the methods in. ASME CODE, SECTION V, SE709.

XII. Final Cleaning

The tested surface shall be cleaned, so that wet fluorescent magnetic particles are completely removed, after inspection.

XIII. Reports

A detailed Magnetic Particle inspection report shall be prepared per contract specifications.

XIV. Acceptance Standards

14.1 Unacceptable defects and repairs requirements.

Where a discontinuity is removed by chipping or grinding, and subsequent welding is not necessary, care shall be taken to contour the surface to eliminate any sharp notches or corners. When a defect appears to be removed, the area shall be reexamined by the same method to verify that it has been removed completely. If repairs are made, the repaired area shall be examined by the same method.

14.2 Treatment of Imperfections believed nonrelevant

Any rejectable indication, which is believed to be nonrelevant, shall be reevaluated by the same method or by the use of other nondestructive methods, and/or by surface conditioning to prove that no unacceptable discontinuities are present.

14.3 Examination of Areas from which defects have been removed.

After a defect is thought to have been removed, and prior to making weld repairs, the area shall be examined by suitable methods to ensure that the defect has been eliminated.

14.4 Re-examination of repair areas

After repairs have been made, the repair area shall be blended into the surrounding surface so as to avoid sharp notches, crevices, or corners and re-examined by the wet fluorescent magnetic particle method and by all other methods of examination that were originally required for the affected area.

XV. Certification of Competence for NDE Personnel

NDE Level II or above shall perform evaluation of Wet Fluorescent Magnetic Particle Examination.

Re-examination and final acceptance determinations will be made by a CWI or API 653 Inspector.

NDE Procedures
Vacuum Box Leak Testing of Welds (NDE-LT-1)

1.0 SCOPE

1.1 This procedure describes the technique, acceptance criteria and documentation requirements, which apply for all vacuum box testing.

1.2 The objective of the vacuum box technique of bubble leak testing is to locate leaks in welds due to through thickness discontinuities. This is accomplished by applying a solution to a local area of the weld and creating a differential pressure across that local area of the weld causing the formation of bubbles as air passes through the solution.

2.0 GOVERNING DOCUMENTS

2.1 Governing documents shall be the latest edition and addendum and include all Codes and Standards referenced in the contract documents which may include but is not limited to API 620, API 650 and API 653.

3.0 PERSONNEL

3.1 Personnel performing vacuum box testing shall be competent performing the examination and shall be familiar with this procedure.

4.0 TEST MATERIALS – BUBBLE SOLUTION

4.1 The bubble forming solution shall produce a film that does not break away from the area to be tested, and the bubbles formed shall not break rapidly due to air drying or low surface tension. The number of bubbles contained in the solution shall be minimized to reduce the problem of discriminating between existing bubbles and those caused by leakage.

4.2 Bubble solution shall be one of the following:

For carbon steels, a commercial leak testing solution or a solution of one part liquid dish soap (Dawn, Joy, Ivory Liquid, etc.) and one hundred parts of one of the following:

a. Water – for testing welds with surface temperatures between 40° F and 125° F.

b. 30 percent alcohol and 70 percent water – for testing welds with surface temperatures less than 40° F with a minimum surface temperature of 20° F.

NOTE: For stainless and nickel steels and for carbon steels when required by contract, a commercially prepared leak testing solution with low chloride, halide and Sulfur content, equal to or better than Leak Tec 277NE, Bubble Emission Leak Detector, shall be used.

5.0 EQUIPMENT

5.1 The vacuum box used shall be of convenient size and contain a window in the side opposite the open bottom. The open bottom edge shall be equipped with a suitable gasket to form a seal against the test surface. Suitable connections, valves, lighting, and gage shall be provided. The gage should preferably have a range of 0-15 psi or a range of 0-30 inches of mercury.

5.2 The required vacuum can be developed in the box by any convenient method (air ejector, vacuum pump, or motor intake manifold).

6.0 PREPARATION FOR THE TEST

6.1 The surfaces to be tested shall be cleaned free of slag, dirt, oil, grease, paint or other contaminants that might mask a leak.

6.2 The temperature of the weld surface shall be within the acceptable range of the leak detection solution. Local heating or cooling is permitted.

7.0 TEST PROCEDURE

7.1 The bubble forming solution shall be applied to the surface to be tested by flowing, spraying, or brushing the solution over the examination area before placement of the vacuum box. The solution shall not be applied more than one minute prior to testing so that evaporation or freezing of the solution does not occur.

7.2 The vacuum box shall be placed over the solution coated section of the test surface and the box evacuated to a partial vacuum of at least two (2) pounds per square inch gage.

7.3 The required partial vacuum shall be maintained for at least ten seconds of examination time.

7.4 An overlap of at least 2 inches of previously viewed surface shall be used for each subsequent examination to assure complete coverage. (as applicable)

7.5 This test shall be performed on all welds associated with previous repairs made by WGS, in TK 5, IAW N62583-09-D-0132 TO 003 / Mod 09 dated 15 Dec 2011.

8.0 ACCEPTANCE CRITERIA

8.1 The presence of continuous bubble growth on the surface being examined indicates leakage through an orifice passage(s) in the area under examination. Any indicated leakage shall be considered unacceptable.

8.2 Some large leaks may not be detected by bubble formation because the strong stream of air may break the bubble film as soon as it forms. To avoid missing this type of leak, the pressure shall be monitored for a variation (decrease). In addition, look for dry areas on the surface being tested. Also, look for active bubble solution within the vacuum box or a ripple effect of the solution on the underside of the glass within the vacuum box.

9.0 REPORTS

9.1 All indicated leaks, regardless of size, shall be marked and repaired by removing the defective weld, re-welding using qualified welding procedures, welders and welding operators, and re-inspecting *for acceptance.* The examining inspector shall report the results of vacuum box testing on the proper documentation per the approved Work Plan.

WILLBROS GOVERNMENT SERVICES (U.S.), LLC

A WILLBROS COMPANY

NON-DESTRUCTIVE TESTING PROCEDURE

PT-1

LIQUID PENETRANT INSPECTION

BY

VISIBLE DYE METHOD

Revision 4: Dated October 22, 2007

Rev	Description	Reviewed	Approved
0	Approved	IQC	DG
1	General	IQC	DG
2	General	IQC	DG
3	General	IQC	DG
4	General	IQC	DG
5			

NON-DESTRUCTIVE TESTING PROCEDURE
PT-1
LIQUID PENETRANT INSPECTION BY VISIBLE DYE METHOD SOLVENT REMOVAL

CONTENTS

	Paragraph
Scope	1
Applicability	2
Procedure Qualification	3
Identification	4
Procedure	5
*Inspection	6
*Interpretation	7
*Acceptance Criteria	8
Repair Indications	9
Post Cleaning	10
Reports	11
Qualification	12
Certification	13
Exhibits	

1.0 SCOPE

This procedure describes the Visible Dye Penetrant examination utilizing the Solvent-removable process as performed by Integrated Service Company L.L.C.

This method of nondestructive examination provides for the detection of discontinuities open to the surface in ferrous and non-ferrous materials, which are non-porous.

Typical discontinuities detectable by this method are cracks, seams, laps, cold shuts, laminations, surface porosity, and lack of fusion.

This procedure is in accordance with the applicable requirements of ASME Section V, Article 6; Section VIII, Div. 1, Appendix 8, and Section I, Appendix A-270.

2.0 APPLICABILITY

This procedure governs all Solvent-Removable Visible Dye Liquid Penetrant examinations performed by Integrated Service Company L.L.C. Inspectors.

All outside testing services and laboratories utilizing Solvent-Removable Visible Dye Liquid Penetrant methods shall abide by this procedure. Alternate or substitute procedures must be submitted to Integrated Service Company L.L.C. for approval.

Liquid penetrant examination is performed on longitudinal weld seams, girth weld seams, overlays, flame cut plate and finished machined surfaces. (Non-essential variable)

3.0 PROCEDURE QUALIFICATION

When procedure qualification is specified, a change of a requirement in ASME Section V Table T-621 identified as an essential variable from the specified value, or range of values, shall require requalification of this written procedure. Where a range is specified for an essential variable, the bounding values of the range shall be qualified by demonstration. A change of a requirement identified as a nonessential variable from the specified value, or range of values, does not require requalification of the written procedure. All changes of essential or nonessential variables from the value, or range of values, specified by the written procedure shall require revision of, or an addendum to, the written procedure.

4.0 IDENTIFICATION

Integrated Service Company L.L.C. Inspectors will use the following family of materials for the standard method.

The dye penetrant will be Magnaflux Spotcheck SKL-SP1 or Sherwin Dubl-Chek DP-40 / DP-51.
The cleaner / remover will be Magnaflux Spotcheck SKC-S or Sherwin Dubl-Chek DR-60.
The developer will be Magnaflux Spotcheck SKD-S2 or Sherwin Dubl-Chek D-100.

5.0 PROCEDURE

Color contrast penetrant inspections may be performed on a component at any point in processing, but normally after the final heat treatment or stress relieving.

Preparation (Essential variable)

All material surfaces to be examined must be free of all rust, splatter, scale, grease, paint, oily films and dirt. Any of these contaminants can prevent the penetrant from entering surface defects.

If only a section of a part, such as a weld, is to be inspected, the adjacent area within one inch of the surface to be inspected must also be cleaned.

Material surfaces must have a finish, which will permit proper interpretation of developed indications. The surface shall be even with no abrupt ridges or valleys. The shape and size of objects to be examined are not limiting factors, provided the specified area under examination can be properly examined within the specified time intervals of this procedure.

The material surface will be cleaned using Magnaflux Spotcheck SKC-S or Sherwin Dubl-Chek DR-60.

Parts must be completely dry prior to penetrant application. Permit five minutes elapsed time for evaporation after cleaning with solvent / cleaner.

Grit or sandblasting prior to the examination is not permitted.

Flame cut edges shall have scale removed prior to cleaning.

The part will be warmed or allowed to cool to a temperature within the range of 50 degrees F to 125 degrees F. When it is not practical to conduct an examination with these temperature limits, qualify the procedure at the temperature of intended use as described in ASME Sec.V, Art. 6, T-653 using the Eishin Crack Panels. Another family of materials may be required.

Application of Dye Penetrant (Essential variable)

Application of the dye penetrant shall be by aerosol spray or brush.

Hold the can nozzle six to twelve inches from the area to be sprayed. Spray the penetrant on the surface so that the entire part or the area under inspection is completely covered with penetrant.

If the part is stationary, move the spray over the entire surface to be inspected. The spray may be held stationary and the part moved through it if the part is mounted on a rotating machine.

Penetration (Dwell) Time (Essential variable)

The surface must remain wetted for a period of not less than 10 minutes. If the penetrant dries within this time, remove it and start again. Do not leave the penetrant on longer than thirty minutes.

Excess Penetrant Removal (Essential variable)

After the penetrant has been on the surface to be inspected for the prescribed period of time, all excess penetrant shall be removed from these surfaces by the following steps.

1. Remove excess penetrant by wiping with a clean, lint-free material, repeating the operation until most traces of penetrant have been removed.

2. The remaining traces shall be removed by wiping the surface with a clean, lint-free material lightly moistened with cleaner / remover.

To minimize removal of penetrant from discontinuities, care shall be taken to avoid the use of excess solvent. Flushing the surface with remover, following the application of the penetrant, and prior to developing is prohibited.

Drying After Excess Penetrant Removal (Essential variable)

The surfaces may be dried by normal evaporation, blotting, wiping or forced air. Parts must be completely dry prior to developer application. Permit five minutes elapsed time for evaporation.

Application of Wet Developer (Essential variable)

The developer shall be applied by aerosol spray as soon as possible after penetrant removal. Shake the can thoroughly and spray short spurts to clear the spray valve. The time interval between penetrant application and the application of the developer shall not exceed 30 minutes.

Spray the area to be inspected with a thin, even coat. The proper developer thickness will dry to a thin translucent layer. The developer requires one-to-two minutes to dry due to its non-chlorinated carrier and propellant. The developer is translucent and care must be taken not to over apply, a heavy coat can mask defects.

The developer must be thoroughly dry before interpretation. It must dwell for a period of not less than 10 minutes before interpretation. Do not interpret after thirty minutes

6.0 INSPECTION

Visible penetrant indications can be inspected in either natural or artificial white light. Adequate illumination is required to ensure no loss of sensitivity in the inspection. A minimum light intensity at the inspection sight of 100 foot candles is required. The light source must be verified and documented as meeting 100 foot candle lighting requirement.

7.0 INTERPRETATION

Indications shall be interpreted and evaluated based on the following definitions.

Only indications with a majority dimension grater than 1/16 inch shall be considered as relevant.

Linear Indications:
Linear indications are those in which the length is more than three times the width.

Rounded Indications:
Rounded indications are those, which are circular or elliptical with a length equal to or less than three times the width.

8.0 ACCEPTANCE CRITERIA

The criteria for acceptance or rejection shall be as specified in the job specifications and/or in the applicable Code or Standard.

9.0 REPAIR OF INDICATIONS

Defects greater than acceptable shall be removed by grinding and/or chipping. If the defects do not encroach upon the minimum thickness, they do not need to be repaired, except they shall be faired in or blended by grinding to eliminate abrupt valleys or ridges. The area shall be retested in accordance with this procedure after fairing.

Defects that reduce the minimum piece or wall thickness shall be removed by chipping and/or grinding and repaired by welding, provided the repair falls within

the permissible requirements of the specific material specification and referencing Code Section. After the defect removal procedure and prior to making the weld repairs, the area shall be examined by suitable methods to ensure the defect has been removed. Welded repairs shall be made by ASME qualified welders and procedures. The repaired area shall be retested in accordance with this procedure.

10.0 POST TEST CLEANING (Non-essential variable)

Post test cleaning is necessary in those cases where residual penetrant or developer could interfere with subsequent processing or with service requirements. If deemed necessary, the entire surface of material affected by the penetrant dye or developer will be cleaned by liberally flushing with Magnaflux Spotcheck SKC-S or Sherwin Dubl-Chek DR-60 cleaner / remover.

11.0 REPORTS

The results of the examination shall be reported on the Liquid Penetrant Test Report form. This report shall be signed and dated by the examiner. (See Exhibit #1)

12.0 QUALIFICATION

Procedure (Essential variable)

Qualification of the procedure shall be performed by utilizing a test piece containing one or more discontinuities of the smallest relevant size encountered in production examinations. The procedure shall be demonstrated as being capable of detecting such discontinuities. Documentation of this demonstration to the Authorized Inspector shall be maintained on file.

Requalification

Requalification shall be required when a change of a requirement in ASME Section V Table T-621 identified as an essential variable from the specified value, or range of values is made to this written procedure. Re-demonstration of the procedure to the Authorized Inspector shall be required.

Personnel (Non-essential variable)

Personnel utilizing this procedure to make final acceptance inspections shall be qualified in accordance with the requirements of Appendix 8 of ASME Section VIII Division 1, and Appendix A-270 of ASME Section I.

Personnel certified Level II or III shall perform interpretation of results.

13.0 CERTIFICATION

WGS hereby certify that this procedure has met all the requirements of T-150 of Section V of the ASME Code.

WILLBROS GOVERNMENT SERVICES (U.S.), LLC

A WILLBROS COMPANY

PRESSURE TEST PROCEDURE
NDT-3

Revision 9 June 5, 2014

Rev	Description	Reviewed	Approved
0	Approved	IQC	DG
1	General	IQC	DG
2	General	IQC	DG
3	General	IQC	DG
4	General	IQC	DG
5	General	IQC	DG
6	General	IQC	TDA
7	General	IQC	RGG
8	General	IQC	RGG
9	General	IQC	RGG

TABLE OF CONTENTS

I. Scope

II. Responsibility

III. Requirements

IV. Procedure

V. Calibrations

VI. Records

HYDROSTATIC TEST PROCEDURE

I. SCOPE:

This procedure is to insure that all the requirements of the applicable sections of the ASME Code are met and to insure the safety of all personnel which are involved in performing the hydrostatic test.

II. RESPONSIBILITIES:

The Site Manager or Field Superintendent is responsible for the safe performance of the hydrostatic test. Only trained personnel, aware of these procedural steps, shall be used to conduct the test.

The Quality Control Manager or his designee is responsible for witnessing and documenting the results of the hydrostatic test and assuring that it is performed safely in accordance with this procedure.

For hydrostatic tests performed to meet ASME Code requirements, the Quality Control Manager or his designee is responsible for notifying the Authorized Inspector in advance of the test so that he may be present.

NOTE: The Authorized Inspector must witness and accept all hydrostatic test performed to meet Code requirements.

III. REQUIREMENTS:

All welds shall be satisfactorily completed and the vessel and or piping released by Quality Control for hydrostatic testing.

NOTE: All fabrication shall have been completed, except for operations which cannot be performed prior to the test such as weld end preparation, seal welding of vent plugs or cosmetic grinding on the base material which does not affect the required thickness. All examinations shall have been performed, except those required after the test.

IV. PROCEDURE:

1.0 The hydrostatic test pressure will be 162 PSI. This number is based on the maximum pressure a tank full of water will produce on the piping. The formula PSI_{max}=1.5((0.433xSp Gr)(H)) was used to determine the final pressure. The height was assumed at 250 ft and the Specific Gravity at 1. 162=1.5((0.433x1)(250)).

2.0 Flanges and nozzles which are not utilized during the hydrostatic test shall be blanked and plugged using material approved for the job or standard approved material in the hydrostatic test area.

2.1 Material (blinds, threaded plugs, bolting, etc.) shall be compatible for the design pressure of the vessel and or piping and for use with the specified test pressure. Only material in good physical condition shall be used.

2.2 Material used for welded closures shall be as specified on the vessel/piping drawing and identified by "P" number or by material specification.

2.3 Welded connections made to temporary closures shall have the minimum weld sizes as specified on the vessel/piping drawing.

2.4 Any additional NDE specified on the drawing for welded temporary closure shall be performed and any necessary repairs made.

2.5 These connections must be visually inspected for verification of proper material, preparation, welding, threading, or bolting as specified on the vessel/piping drawing.

2.6 The design and capacity of test plugs will be verified by Super- vision and Quality Control. The plugs will be secured by chain or other means to assure containment if they slip.

2.7 Visual inspection by Quality Control of all closures is required before pressure application.

3.0 Hydro Trees will be engineered and constructed to WGS Engineering specifications or better. All Hydro Trees will be marked with their rated capacity. Temporary drains and vents will use the same or higher schedule pipe as the Hydro Tree.

4.0 The testing medium shall be clear city tap water with less than 50 ppm Chloride content unless otherwise specified in the vessel/piping design specifications. This report will include the latest city water quality report. Other liquid mediums may be used if there is a danger of freezing or water would cause adverse effects on the vessel/piping. After testing is completed, the water will be drained into totes for disposal off-site.

5.0 A calibrated gauge shall be selected with a dial range of at least 1 1/2 times and not more than 4 times the hydrostatic test pressure. The increments between graduations will be 1 psig or less such that the Quality Control Inspector and the operator controlling the test shall be able to determine when the required test pressure has been applied.

5.1 Digital reading pressure gauges having a wider range of pressure may be used provided the readings give the same or greater degree of accuracy as obtained with dial pressure gauges.

5.2 The indicating gauge shall be mounted inside the tank and directly to the piping as near as practical on the top most part undergoing the hydrostatic test. Hydrostatic head on the gauge shall be considered depending on the location of the gauge.

5.3 The indicating gauge will be readily visible to the operator controlling the pressure applied. For large vessels, consideration shall be given to the use of a recording gauge in addition to indicating gauges.

5.4 Using a thermocouple, we will measure temperature to 0.1°F, throughout the test.

5.5 A pressure chart recorder will be used to continuously plot pressure over the duration of the entire test.

5.6 The official pressure sensing device will be a deadweight tester capable of measuring in at least 1 psi increments.

6.0 Connect all fill and vent connections as necessary.

6.1 Open vents must be located at the high point of the vessel/piping during the fill up to purge the air from the system.

6.2 A hose or some other means to control water release should be installed on the high point vent.

7.0 Prior to filling the vessel, all personnel not involved with the hydrostatic test shall be kept at a safe distance from the testing area. The item to be hydro tested, the pump and the high pressure hose will be roped off at a safe distance with red barricade tape.

8.0 The temperature of the testing medium shall be as specified in the vessel / piping design specifications.

8.1 The testing medium shall be at least ambient temperature but in no case less than 70 degrees F for Section I items. For NBIC repairs, the metal temperature should not be less than 60 degrees F preferably at least 30 degrees above the MDMT but not more than 120 degrees F for section VIII Division 1 items. The temperature for B31.3 Piping is limited by the stress value at test pressure-temperature.

8.2 The test pressure shall not be applied until the vessel and its contents are at about the same temperature.

9.0 The vessel shall be filled with the testing medium until all air pockets have been expelled. The vent valve shall be closed when it is determined that venting is completed.

9.1 Vents shall be provided at all high points of the vessel/piping in the position in which it is to be tested to purge possible air pockets while the vessel is filling. If the operator or the Quality Control Inspector determines the vent arrangement is inadequate, the test shall be aborted until the problem is resolved.

CAUTION: The venting of air at ALL high points must be checked IMMEDIATELY prior to the pressure test. As the temperature of the testing medium increases, air may be released. It must be vented.

9.2 If the pressure does not come up readily when pumping, stop. This could be an indication of air in the system. Depressurize and re-purge to assure the removal of air.

10.0 The operator of the hydrostatic pump shall have a clear view of the test pressure gauge, so that he will be aware of the test pressure at all times.

10.1 The pump operator will be stationed away from the immediate vicinity of the vessel/piping being tested as deemed necessary to provide for his safety. A means of observing the pressure gauge will be provided.

10.2 If the operator or the Quality Control Inspector suspects any gauge to be in error, the test will be aborted until such gauge has been replaced or recalibrated.

11.0 At this time and until the conclusion of the hydrostatic test, the pump operator will not leave the pump station for any purpose except when relieved by an individual competent in the performance of this operation.

12.0 The hydrostatic pressure shall be applied gradually until the required test pressure of 162 psig is reached. The pressure application will be witnessed by the Quality Control Inspector. A close visual inspection WILL NOT BE conducted at this time.

12.1 The test pressure shall never be more than 170 psig.

12.2 NO FITTINGS OR CONNECTIONS WILL BE TIGHTENED WHILE THE SYSTEM OR VESSEL IS UNDER PRESSURE.

12.3 If a leak is detected during testing, the pressure is to be removed prior to approaching the vessel.

12.3.1 Leakage of temporary gaskets or plugs installed for the purpose of conducting the hydrostatic test and which will be replaced later may be permitted unless the leakage exceeds the ability to maintain the vessel/ piping test pressure for the required amount of time or interferes with the evaluation of the test results.

13.0 Once the line is pressurized to 162 psig, that pressure will be maintained for 4 hours.

13.1 The holding time shall be a minimum of four (4) hours or a greater time if specified on the vessel/piping drawing or requested by the Inspector to complete the visual inspection of joints or components.

14.0 A close visual examination will then be conducted of all joints and connections at this time. Since some of the piping is not accessible for visual inspection DV/DP calculations will be performed. There will be two (2) DV/DP values. One DV/DP value will be theoretically calculated using the ambient temperature within the tank. The other DV/DP value will be read from actual field measurements. If the calculated and measured DV/DP values are within the limits specified by the California State Fire Marshal's Office, the tested section of piping will be determined acceptable (PASS).

15.0 Upon completion of the hydrostatic test, the pressure will be dropped. The pressure gauge will be checked to verify it has returned to zero.

16.0 Drain and vent valves will be opened to allow the vessel to drain. Never open the drains on a large vessel without first opening the vent. Open lines shall be elevated in order to be free of any standing water.

V. Calibrations

The test gauge(s) shall be calibrated within a (1) year current time frame and in accordance with NIST standards. A copy of the gauge(s) calibration will be present during the test.

VI. Records

The Hydrostatic/Pneumatic Pressure Test will be recorded on the appropriate form as determined by the QC Inspector at the completion of the test. The test record will be maintained for the duration as specified by the applicable code.

1.0 Approved Test Forms

- 1.1 Record of Hydrostatic/Pneumatic Test
- 1.2 Pressure Test Certificate

A copy of the test gauge calibration(s) shall be attached to the test report for final records. All test records or reports will be submitted in the project final report or data book.

Test data and results will be forwarded for review to NAVFAC EXWC within 24 hours of test completion. Forwarded test data and results will include a statement of PASS or FAIL and reasoning.

Record of Hydrostatic / Pneumatic Test

Job Number _____ Location_____

Sheet Number_____ Mark Number_____

Date of Test_____ Gage Number_____ Calibration _____

Chart Recorder Number_____

Calibration Date _____

Hydrostatic Test Pressure_____PSIG

Test Medium _____

Duration of Test _____

Witness and Accepted by:

Inspector:_____ Date: _____

Customer Representative _____ Date:_____

WILLBROS GOVERNMENT SERVICES (U.S.), LLC

A WILLBROS COMPANY

Pressure Test Certificate

PROJECT	LOCATION JOB NUMBER
CONTRACTOR	P & ID No.
SERVICE	
TEST PACK NUMBER.	DRAWING No.
SYSTEM NUMBER	
MARK No.	ISO No.
LINE No.	
LINE SPECIFICATION	TEST MEDIUM
DESIGN PRESSURE (MAWP) PSI	TEST PRESSURE PSI

STRESS RELIEVED YES NO INTERNAL LINING YES NO

ALL PRE- TEST NDE COMPLETE AND ACCEPTED	SIGNATURE	DATE
MATERIAL RECORDS COMPLETE	SIGNATURE	DATE
WELDING HISTORY RECORDS COMPLETE	SIGNATURE	DATE
PRE-TEST INSPECTION	FOREMAN SIGNATURE	DATE

WELDING OF PRESSURE PARTS COMPLETE		SYSTEM FILLED AND PURGED OF AIR	
PROPER GASKETS, BOLTS AND BLINDS		TEMPERATURE WITHIN SPECIFICATION	
TEMPORARY VENTS AND DRAINS INSPECTED		HYDRO EQUIPMENT AND GAGES INSPECTED	
TEST PLUGS INSPECTED AND SECURED		OPERATORS PROPERLY INSTRUCTED	
INSTUMENTATION BLOCKED OR REMOVED		BARRACADES IN PLACE	
VALVES IN THE RIGHT POSITION (OPEN/CLOSED)		AREA CLEARED OF PERSONEL	
TEST MEDIUM WITHIN SPECIFICATION			

QUALITY CONTROL SIGNATURE DATE

PRESSURE TEST DURATION	DATE OF TEST	AMBIENT TEMP.	START	FINISH

COMMENTS (TO INCLUDE GAGE NUMBER AND CALIBRATION DATE)

	Inspected by	Witnessed by
COMPANY		
SIGNATURE		
PRINT NAME		
DATE		

POST HYDRO RESTORATION

HYDRO BLOWN DOWN & DRY		CONTROL & CHECK VALVES INSTALLED	
HYDRO BLINDS PULLED		HIGH POINT PLUGS SEAL WELDED & INSPECTED	
PROPER GASKETS INSTALLED		NDE ON PLUG SEAL WELDS COMPLETE	
PROPER BOLTING & TIGHTNESS		DRAIN / VENT VALVES CLOSED & PLUGGED	

	Inspected by	Witnessed by
COMPANY		
SIGNATURE		
PRINT NAME		
DATE		

STRESS CALCULATIONS FOR 3/4" SA106-GR B PIPE
t-12.5% for pipe with no Corrosion Allowance

ASME PG-27.2.1 TUBING PRESSURE CALCS. <=5"OD

$P = S [2t - 0.01D - 2e / D - (t - 0.005D - e)]$

Thickness	Diameter	Stress	Exp tubes
0.135	1.05	17100	0
t	D	S	e

Pressure	
2218.725	Sch 80

ASME PG-27.2.1 TUBING PRESSURE CALCS. <=5"OD

$P = S [2t - 0.01D - 2e / D - (t - 0.005D - e)]$

Thickness	Diameter	Stress	Exp tubes
0.192	1.05	17100	0
t	D	S	e

Pressure	
3193.425	Sch 160

ASME PG-27.2.1 TUBING PRESSURE CALCS. <=5"OD

$P = S [2t - 0.01D - 2e / D - (t - 0.005D - e)]$

Thickness	Diameter	Stress	Exp tubes
0.269	1.05	17100	0
t	D	S	e

Pressure	
4510.125	Sch XXS

MAWP FOR HYDRO TREE VALVES:

TYPE	PRESSURE
800#	2000#
1500#	3750#
2500#	6250#

Hydro Tree Rated to 1500 PSI

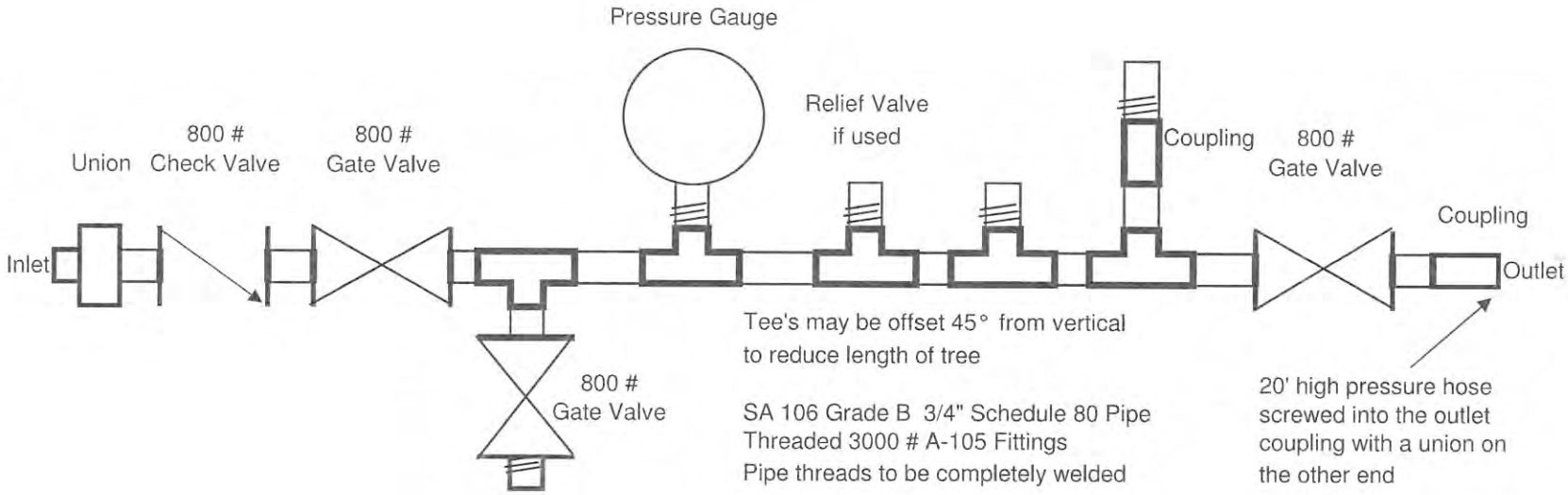

Hydro Tree Rated to 3000 PSI

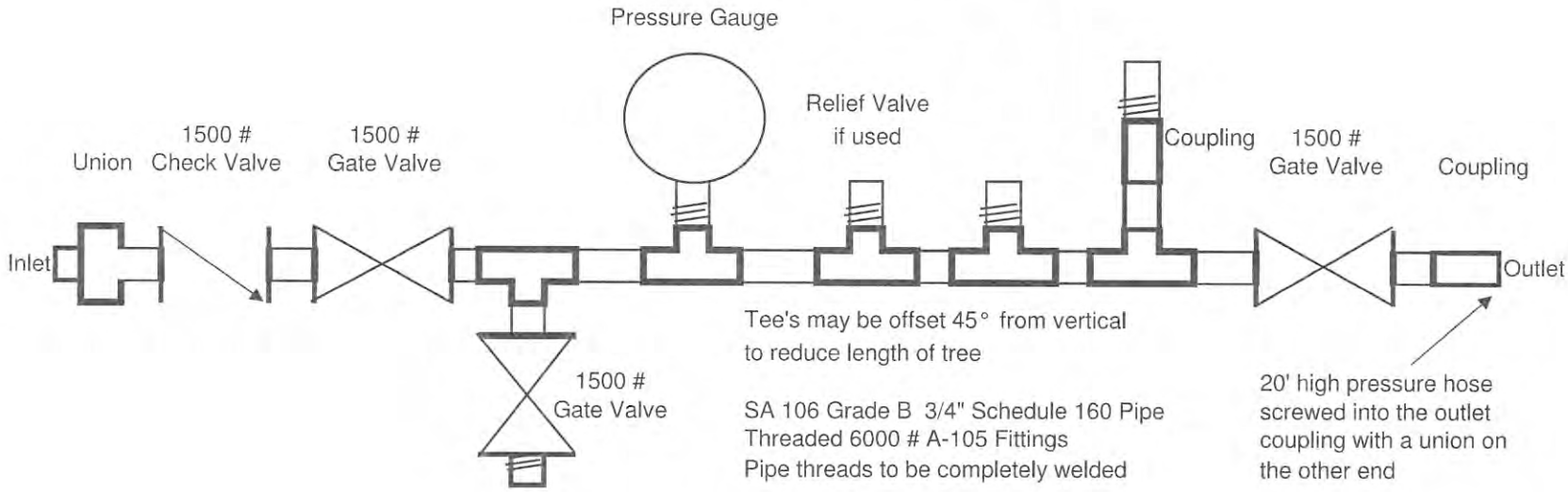

Hydro Tree Rated to 4500 PSI

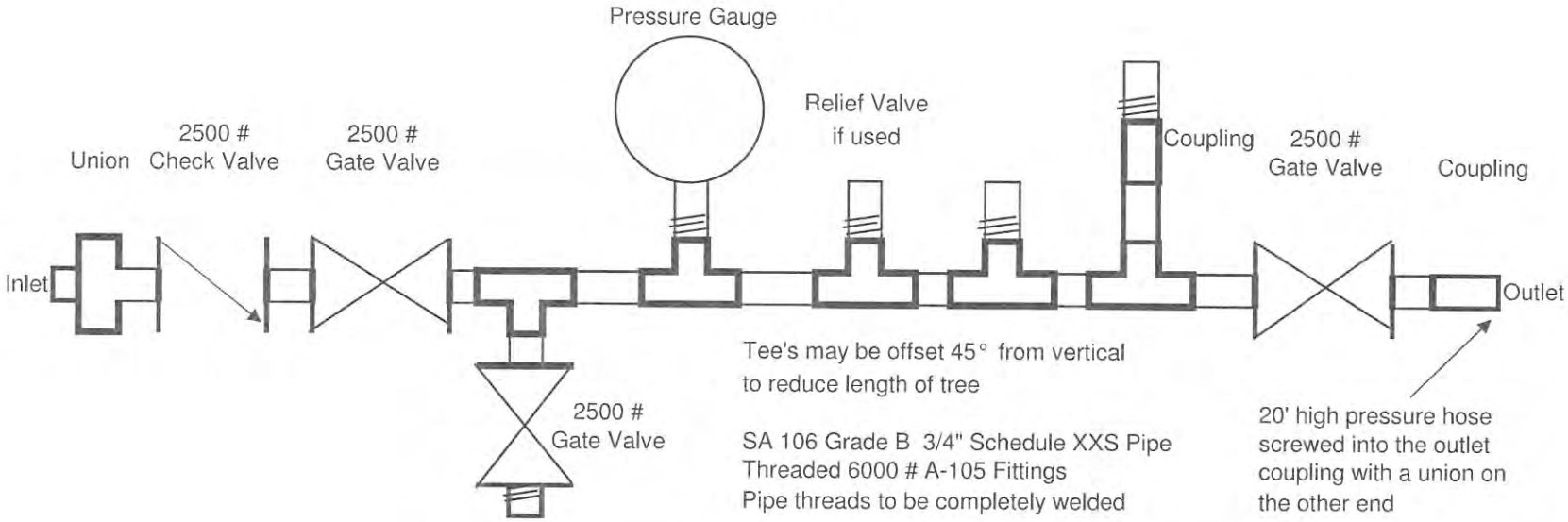

APPENDIX F

PROJECT PROCEDURES – REPAIR CONSTRUCTION / QUALITY CONTROL / WELDING

- **WGS FIELD QUALITY CONTROL PLAN & MANUAL**
- **WELDING PROCEDURES**
  - **PROCEDURE 1-S-1**
  - **PROCEDURE 1-S-10**
  - **PROCEDURE 1-S-4**
  - **PROCEDURE 1-S-6**
  - **PROCEDURE 1-TS-1**

Distribution is limited to US Government agencies and their contractors; administrative/operational use within the context of this project. Other request shall be referred to the Naval Facilities Engineering Service Center.

WILLBROS GOVERNMENT SERVICES (U.S.), LLC

A WILLBROS COMPANY

WILLBROS GOVERNMENT SERVICES, LLC

FIELD QUALITY CONTROL PLAN & MANUAL

Rev	Description	Reviewed	Approved
0	Approved	IQC	DG
1	General	IQC	TDA
2			
3			
4			
5			

TABLE OF CONTENTS

SECTION	CONTENTS
1.	INTRODUCTION
2.	PERSONNEL RESPONSIBILITIES
3.	PROGRAM METHODS
4.	FORMS AND REPORTS
5.	RECEIVING INSPECTION
6.	MATERIAL STORAGE AND CONTROL
7.	CIVIL
8.	PAINTING
9.	INSULATION
10.	STRUCTURAL STEEL
11.	WELD MATERIAL CONTROL
12.	WELDING PROCEDURES
13.	WELDING QUALIFICATION
14.	PRODUCTION WELDING CONTROL
15.	PIPE ERECTION
16.	FABRICATION AND ERECTION OF PRESSURE VESSELS AND STORAGE TANKS

1. Introduction

1.1 Purpose

The objective of this Field Quality Control Program is to establish written plan procedures and inspection guidelines for Field inspectors, and craft specialists to assure that component materials are assembled, installed, inspected and tested in accordance with specifications, governing Codes, standards and contract documents.

This program's intended use is to ensure that all inspections, documentation, reports and records will be maintained throughout all phases of the project.

The Field Quality Control Program will be directed to all disciplines to improve communication and coordination with all project members. Its intent is to provide historical data and traceability of the projects and maintenance effort as related to materials, crafts employed, procedures utilized, and inspections performed in accordance with established procedures.

1.2 Scope

These directives and procedures shall be used by project participants to assure compliance with material, fabrication, inspection and testing specifications and codes.

The quality effort provided is to assure that quality requirements established by the Client are initiated in the inspection program. Quality requirements will be maintained from receipt of material through installation and final testing.

It is intended to have craft supervision participate in the responsibility for overall quality function and have maximum coordination of effort where quality requirements are involved.

This program will be subject to periodic review and revision to encompass new material and techniques.

1.3 Responsibility

It is the responsibility of Project Management and the QA/QC Manager to administer and implement the inspection procedures as deemed necessary to verify and attain established quality requirements for the project.

Enforcement of quality procedures at the field level will be through the site QA/QC Manager and Site Project Manager.

The Inspector(s) will be trained and qualified professionals in all related quality procedures, testing and methods of documentation, as required by individual work assignments.

Audits will be performed by the QA/QC Manager to determine effectiveness of quality functions, evaluate schedules, procedures and personnel performance.

It will be the responsibility of the Site QA/QC Manager to organize, review, and turn over all Project Quality Control Documents to Client Inspection for final review, cataloging, and disposition.

2. Personnel Responsibilities

2.1 Quality Control Manager

Formulate and administer the quality control requirements for jobsite activities in accordance with Client, engineering specifications, applicable codes and this Field Quality Control Program.

Coordinate the quality inspection activities of inspectors with craft supervisors and specialists on the jobsite.

Administer the organizing of filing and recording systems and disposition of quality related documentation.

Facilitate and participate in the resolution of quality issues concerning vendors, engineering, and construction with quality representatives from Client.

Administer continuing surveillance of all craft disciplines to assure that quality standards of workmanship are maintained and conform to approved drawings and specifications in all areas.

Initiate action to prevent, stop or correct the occurrence of quality control deficiencies, defective work and deficient reports.

Administer and provide for certification of all inspection and NDE personnel. Utilize guidelines established by codes and standards.

Develop additional quality procedures as required to cover special tests, audits, or to improve coverage of the Field Quality Control Program.

2.2 Site Inspector

Assures by inspection at the jobsite, that all quality requirements are maintained for each assigned area or areas and that the proper levels of inspection are applied based on Client and approved specifications, codes and drawings.

Monitors testing, in-process work and evaluations to assure quality requirements are met.

Maintains welder qualifications and welder performance records.

Responsible for weld mapping and testing requirements.

Maintains and initiates records. Reviews procedures and documentation for completeness, accuracy and compliance to Client specifications and standards.

Performs investigation and research in the definition and isolation of quality problems and participates in the resolution of quality problems.

Assignment of Inspectors will be to one or more of the following, as qualification and experience allow, i.e.: Based on the site organization structure, inspectors may be assigned by plant area.

- Receiving inspection, material storage and issue control
- Civil survey, concrete and structural
- Piping, welding and weld material control
- Mechanical equipment, vessel, tanks and exchangers
- Electrical and instrumentation
- Quality testing, system hydro, NDE,

Surveillance of craft personnel to assure:

- Approved engineering and workmanship methods are being used
- Quality approved material is being used
- Advanced warning of possible problem areas is provided to supervision
- Good safety practices are being followed
- Cooperation is achieved to meet quality goals
- Accurate documentation of work and testing is maintained

3. Program Methods

3.1 Scope

This Field Quality Control Program is established for use by WGS and their Sub-contractors. All inspections, tests and verifications will be conducted in accordance with Client and Engineering specifications, or Codes and specifications referenced therein. This document describes the systematic methods that will be utilized to establish the quality requirements to meet design intent.

The quality control effort will be coordinated within WGS and with their Subcontractors. The following Quality Control Jobsite plan will be reviewed and initiated for the respective job.

3.2 Site Plan

Inspection will be by audit, testing and surveillance and will provide a progressive flow of records and information.

Receiving inspection will be performed on all major equipment when it is received at the jobsite. Storage of equipment and material will be monitored.

The Inspector(s) will continuously monitor the welder qualification, NDE testing, erection and welding of Tank and its components.

The Inspector(s) will monitor the activity of craft disciplines to assure and report that construction meets Client specifications and accepted quality levels of workmanship and safety.

The Superintendents, Inspectors, and Client Representative, will provide final acceptance of work completed and all inspections. All hydro test results will be monitored and signed off by Client representatives.

The Inspector(s) shall also recognize safety problems and report unsafe areas, working conditions, or working practices during inspection surveillance.

3.3 Corrective Action

A primary function of any quality inspection program is the control of nonconforming material, assemblies, or construction methods. Inspectors will utilize this plan of actions when any condition does not comply with drawings, specifications, Codes or Client specifications. The nonconformity must be eliminated before final acceptance.

If at any time material or workmanship is observed that do not comply with drawings, specification, Code or acceptable construction practices, the Inspector shall notify the Superintendent to initiate prompt corrective action. This information may be documented in the form of a discrepancy report. The Inspector will maintain discrepancy reports. The QA/QC Manager and Superintendent will evaluate all Discrepancy reports for resolution and correction.

The discrepancies, if they cannot be corrected immediately (verbally), shall be documented on a Nonconformance Report Form. A detailed description will be given for the item or condition that has failed to meet drawing or specification requirements and an explanation of conditions at the time of failure and probable cause. All nonconformance reports will be sent to the QA/QC Manager for approval.

All nonconformance reports will be evaluated by the QA/QC Manager, Project Engineer, and Design Engineering as appropriate to coordinate the resolution and determine methods of correction which may prevent recurrence of the problem.

When corrective action is complete, the item will be subject to final inspection by the Inspector.

The Inspector will note on his Final Acceptance Report any retest required, NDE required, or change in identification of any replacement parts used in correcting the problem.

3.4 Inspection Documentation and Reports

The QA/QC Manager will initiate, or assure initiation by craft foreman, engineering, supervisors, superintendents, or inspectors the appropriate required test and inspections of specific systems or components and submit recorded forms with verification of the Inspector's signature to the appropriate Client representative.

4. Forms and Reports

The Quality Control inspection forms and reports (Exhibits) will be the primary documentation used by WGS.

Additional forms such as checklist, Client documentation and Code data forms can be added to the applicable sections for initiation by the Project Manager, Site Manger or the Quality Control Manager.

Each Inspector and Craft Supervisor making an inspection is required to document activities as they apply to the specific area or item of inspection. The QA/QC Manager will assure that copies of reports are sent through project or jobsite distribution list, as determined by contract or initial jobsite planning.

The QA/QC Manager will conduct periodic monitoring to assure continuing compliance to Client specification and procedures.

All forms require the same accurate completion and punctual submittal to demonstrate a professional Quality Assurance Program for the project. This form numbering system and following forms index may be supplemented to include Client documentation.

5. Receiving Inspection

5.1 General

All equipment, components and material received in the field require inspection. Inspection will vary in extent according to equipment type, material quantities and Client requirements. All items received will be inspected to assure they conform to purchase order and shipping documents.

5.2 Responsibility

Assignment of receiving inspection responsibility depends upon the type of equipment, components and material subject to inspection and to what extent inspection was performed at the source.

Responsibility for receiving inspection is assigned to the QA/QC Manager or his designee.

5.3 General Procedure

The Material Control Inspector, based on the size and scope of the project, will have the following prime duties:

a. Provide facilities and personnel necessary to receive and assure proper storage of material, component parts, and bulk commodities.

b. To assure proper identification of all items listed on the receiving report prior to signing the receiving documents.

c. Rotating equipment shall be tagged with the equipment number, as specified by the purchase order.

d. Identify and record shipping damage at time of delivery, have driver sign receiving report if possible. Client Project Management is to be notified of shipping damage.

e. Notify the Inspection department at the time material has arrived.

f. Assist in resolving discrepant material issues.

g. Generate and maintain Over, Short and Damage Report, Shipping Records and Receiving Report.

h. A copy of the Over, Short or Damage Report, Shipping Records and Receiving Reports are to be filed and copied to the WGS QA/QC Manager, Project Manager and Client entity, e.g. projects and or purchasing.

i. PMI as required for alloy materials will be performed to the specific inspection procedure.

NOTE: The extent of receiving inspection on major equipment items may be supplemented with vendor surveillance requirements.

5.4 Quality Control Inspection

The Field Quality Control Inspection will provide the necessary inspection required to assure compliance to all applicable specification, codes and purchase order documents.

Upon notification of receipt of material, components parts, and bulk commodities, the QA/QC Manager will determine the level of inspection to be performed by reviewing purchase order documents, engineering specification Codes and standards and any other referenced documents.

The Inspector will assure receipt of the required documentation. If the required documentation is not received with the shipment, the Inspector will report this fact to the QA/QC Manager.

Inspection should be made at the time of material arrival to verify the quality of the item and will also determine acceptability.

The Inspectors shall perform over, short or damage inspection.

The Inspector will complete the Receiving Inspection Report. He will maintain one (1) copy for his inspection records and attach two (2) copies to the receiving documents.

Receiving Inspection Report with Rejected items must be retained and maintained in a separate file for proper follow-up action. Disposition and verification of corrective action is required on reports prior to placing items in Accepted status.

Only the Inspector will be authorized to release rejected items after disposition.

6. Material Storage and Control

6.1 General Procedures

This is a system for assuring that adequate procedures exist for controlling material during storage, and will be used only when Integrated Service Company L.L.C. is responsible for material storage and controls.

The applicable craft and/or subcontractor, when designated, will be responsible for the performance of preventive maintenance and storage requirements.

The QA/QC Manager or his designee will conduct periodic inspections to assure compliance with the required storage procedure.

The objective is to assure that items are properly identified, protected, stored and maintained to ensure manufacturer's guarantees and warranties are not voided and to further assure proper operation.

6.2 Responsibilities

The QA/QC Manager or his designee will inspect all items received in accordance with the Receiving Inspection procedure in this manual and will assure that the preventive maintenance and storage requirements established by Client, Project Engineering and Manufacturer Standards are being adhered to.

The Material Control Manager will prepare a list of equipment and materials indicating storage and preventive maintenance requirements.

The responsible craft will perform preventive maintenance as indicated on the equipment list and will record actual dates on the record of preventive maintenance.

6.3 Inspection

The Project Quality Control Manager will determine preventive maintenance requirements or other special requirements from equipment technical manuals, engineering specifications and purchase documents.

Quality Control will conduct spot-checks in construction area, material storage yard, stock rooms, tool rooms and warehouse to ensure that the material and equipment are being properly stored and or maintained.

Quality Control will also ensure that a Rotating Equipment Log has been prepared and that all equipment, which must be rotated to prevent deterioration, is rotated at the prescribed frequency.

6.4 Storage and Protection

a. Fittings, Carbon Steel:

- All screwed fittings shall be stored indoors.
- All fittings 2" and below shall be stored indoors.

- Butt-weld fittings above 2" may be stored outside provided adequate protection is available to ensure quality control requirements.

b. Fittings, Alloy

- Procedures for alloy fittings shall be the same as for carbon steel, with one exception:
- Stainless fittings shall be stored on wood and not allowed to come in contact with the ground, mud, water or debris.

c. Instrumentation:

- Where practical, all instruments shall be stored indoors with adequate weather and hazard protection.
- Where outside storage is necessary, proper precaution shall be taken to provide adequate weather and hazard protection. Periodic checks shall be made to ensure proper protection.

d. Pipe:

- All pipes shall be stored outside on supports such as 4' x 4's or other timbers, with each end covered.
- Pipe shall be checked at least once a month for any oxidation of surfaces covered ends and proper corrective action taken if oxidation should occur.

e. Electrical:

- Small electrical fittings shall be stored indoors.
- Large fittings may be stored outdoors with proper weather protection.
- Conduit maybe stored outside on elevated surfaces.
- All electrical components will be stored indoors.

f. Pumps, Motors and Machinery:

- Pumps, motors and machinery will be stored outside in an area free from motorized traffic and hazards.
- Motors will be stored on pallets or cribbing high enough to keep them out of the water.
- Motor vents and openings shall be covered to protect the internals from moisture, dust and dirt.
- Exposed shafts, gears shall be waterproofed to protect them from oxidation.

g. Bolts and Gaskets:

- Bolts and gaskets will be stored inside. Gaskets will be stored on a flat surface with nothing place on top of them.
- Bolts will be periodically checked for corrosion.

- Ring joint gaskets should be coated or wrapped to prevent scoring of the sealing surface.

7. Civil

7.1 Responsibility

The WGS Quality Control Department is responsible for inspection or verification of civil work performed by WGS and/or WGS subcontractors.

7.2 Survey

Verify that all preliminary survey work for the site has been previously completed and documented.

The following items pertaining to the detailed site survey shall be of special attention to the Quality Control Inspector:

- Check to see that the correct control monument and benchmark are used.
- Check to see that the benchmarks are adequately protected.
- Check to see that the permanency of the control monuments is adequate.

7.3 Soil Investigation

Soil investigation shall be contracted to independent civil consultants.

The consultant may be asked to supply bearing ratio curves, land fill procedures, compaction test reports and moisture-density reports

7.4 Site Preparation

All trees, shrubs, stumps, fences, abandoned structures, foundation, large rocks, debris, etc., shall be removed to a depth specified by the contract specifications.

Any area that may collect rainwater shall have proper drainage.

Determine that grass and other organic material have been removed as required by the Project drawings and specifications. This material is to be disposed of as per contract specification and not stockpiled or buried where other construction operations will be interfered with.

Drainage of rain and subsurface water shall be adequate. This may be accomplished by keeping a sufficient number of pumps available.

Investigate the existence of underground obstructions, such as pipelines, telephone cable, per cables, etc., prior to the start of excavation activities. Notify engineering of any finding so that the information may appear on proper drawings.

Check for soft spots and undesirable materials.

Check for location and depth of excavation to ensure conformance with approved drawings and specifications.

7.5 Backfill

The soil consultant shall approve any backfill materials used on the construction site. If the Fill material was not approved at the time of soils investigation and it is questionable, the soil consultant shall be called for approval.

Prior to placing of fill material, the excavation should be inspected for the following:

- The area is free of organic materials; i.e., paper, wood, rags, etc. Water is removed.
- Loose rock, dirt, etc., which will interfere with foundations, has been removed.
- Check for soft spots

7.6 Compaction

The Quality Control Inspector will witness compaction test.

The compaction test may be performed by a subcontracted soils inspection agency. This agency will be required to submit all tests to the Quality Control Manager.

The procedure for the density test shall be in accordance with applicable engineering spec. or ASTM Standards.

7.7 Foundations

Investigate and record all areas for existing underground facilities.

When depth of excavation is great enough and conditions indicate possible ground cave-in, shoring shall be used for safety of personnel. The Safety Department should be notified to obtain proper safety permit as required. USE OSHA STANDARDS.

All open holes, excavation and dangerous operations shall be barricaded and the Safety Department notified.

The Quality Control Inspector shall check the size and location prior to excavation. Verify elevation of the excavation.

Water shall be removed from the excavation site. Pumps must be available to maintain drainage in the event water continues to run into the excavation.

Backfill of the excavation shall be accomplished by using only soil materials approved by specifications and the soil consultants.

All loose debris shall be removed before backfill starts.

7.8 Trenching

The excavation should be checked by the Quality Control Inspector as to location and elevations.

Coated pipe should lie on sand bags or other suitable softeners. Hard supports are not acceptable.

Backfill under roads, foundations, slabs or other load-bearing areas shall be compacted in accordance with engineering specification.

Shoring and barricades shall be used as necessary, within the Safety Department's approved guidelines.

7.9 Foundations or Pads

The location, size and other design variables shall be checked by the Inspection Department for conformance with approved drawings and specifications.

The fill material shall conform to applicable specifications. A compaction test shall be taken as described by specifications. A copy of the compaction test results on each foundation shall be filed with the Project Manager and Q C Manager.

If an oiled sand base is required by specifications, it shall be mixed outside the excavation area, then brought into the base and compacted.

7.10 Levees and Basins

The Inspector should check the location, size and elevation of the levees and basin to ensure conformance with approved design drawings.

The fill material shall conform to and be installed in accordance with approved drawings.

7.11 Concrete Testing

The Inspector will sample and make cylinders in accordance with ASTM C31 and C172.

Each truck will be tested for slump to comply with Client specifications. One slump test performed in accordance with ASTM C 143. If the slump exceeds, by more than one inch, the maximum specified slump for the classification of concrete ordered in accordance with the Ready-Mixed Concrete Specification, the Inspector shall reject the concrete.

7.12 Forms and Reinforcing Steel

The Inspector will check the following items:

- Dimension of form and embedded items.
- Elevation measurements.
- Chamfer (Usually a triangular length of wood, approximately 1/2" leg, which is a part of the formwork, intended to break exposed sharp edges).
- Evacuation to assure absence of organic material, excessive water, etc.
- Correct amount of clearance between rebar and proposed concrete surfaces after pour.

- Spacing between rebar, as checked against applicable drawings.
- Correct size of rebar.
- Amount of lap of rebar is per applicable drawings.
- That rebar lopped together are secured with wire or correct securing procedure per specifications.
- That excessive rust, dirt, mud or other organic materials have been removed from rebar.
- Anchor bolts, angles, etc. for proper size, material and installation dimensions. All rails, plates and other embedded items are installed and accurately placed.
- Pipe sleeves & fittings are properly installed.
- All conduit and grounding is properly installed. (Signed off by Electrical Department)

7.13 Concrete Placement

Concrete should not be allowed to drop over five feet (5') or aggregate separation may occur.

Excessive vibration may cause aggregate separation.

Finish to be in accordance with specification. Finish work should be done on the same day as the pour.

Add only approved mixtures to concrete to advance or retard curing process, air entraining, etc.

7.14 Pour - Q.C. Data

The following items should be checked and logged:

- Estimated quantity required. Information should be obtainable from the drawing or Engineering.
- The required design strength and Cylinder Test per Client specifications.
- Slump required by specification and actual results.
- Approximate atmospheric temperature at time of pour.
- Record concrete temperature at time of placement.
- Number of gallons of water added to concrete mix at jobsite.
- Time from batch plant to placement (from batch ticket).
- Batch ticket number (Attach ticket from each truck used).

8. Painting

8.1 Standards and Specifications

These Standards shall apply to painting performed by WGS and or a Painting Contractor hired by WGS.

All painting shall conform to the applicable project specifications and manufacturer's recommendations.

Surface preparation shall conform to applicable painting specification.

Note: On all piping, which will require field hydro, welds and approximately 2" either side of welds are to be left unpainted.

8.2 Receiving Inspection

- Check for areas where paint may have been applied over mill scale or rust. Check for the use of correct paint.
- Check for dry film thickness.
- Paint materials shall be checked for damaged containers.

8.3 Inspection Procedures - Paint

All painting must conform to approved Client painting specifications for protective coating of equipment. The following items shall be checked prior to, during and after final painting:

- Surface preparation per applicable drawings:
- Surface shall be dry and clean, free from dirt, oil, grease, water and other foreign matter.
- Motors, pumps and related equipment, which may be damaged by any specific cleaning, process, i.e., sand blasting shall be brought to the attention of the Client for necessary changes.
- All surfaces must be painted on the same day that they were cleaned.
- On pumps and motor, paint should not be allowed in parts, which may affect operation; i.e., seals, air filters and rotation shafts, bearing, etc.
- Check for the use of the correct primer.
- If multiple layers of primer are to be used, each layer shall be checked by the Inspection Department to ensure that proper millage requirements have been met and that surface profile conditions and compatibility with other paints are acceptable.
- Intermediate coat shall not be applied until the Inspector has approved the primer coat(s).
- Check intermediate painting materials to ensure conformance to specification.

- The final coat of paint shall not be applied until the Inspector has approved intermediate coats.
- Check for the use of correct paint materials of final coat.
- Check thickness of finished product.
- Check for good workmanship; i.e., no paint runs, excessive sand that may have blown on wet paint, scratches, etc.
- All special coatings must be applied in strict accordance with the approved specification and the manufacturing's recommendations. If information available is in conflict, contact the Project Field Engineer.

9. Insulation

9.1 General

These Standards shall apply to insulation installation performed by WGS and or an Insulation Contractor hired by WGS.

All insulation must conform to the applicable approved project insulation specifications,

The specifications will list the approved materials for insulating equipment and piping for both hot and cold services. The Inspector must examine all materials as they are used to see that they conform to specifications.

9.2 Receiving Inspection

Items received already insulated shall be checked against the applicable purchase order for the following:

- Correct thickness.
- Correct material.
- Damage.

Insulation received shall be checked for the following:

- Water damage to insulating cements or insulation.
- Excessive breakage of block or pre-form pipe insulation.
- Damage to jacketing materials.
- Ensure that all material conforms to specifications.

9.3 Equipment

The Inspector must inspect the following equipment before insulation is applied:

- Confirm the completion of all testing; i.e., hydro, pneumatic, ND, etc.
- Mechanical check for all insulation rings, supports, clips, ladders, platforms, etc.

- Confirm that equipment has been painted as required.
- Surface of equipment should be free of ice, snow, dirt, grease, etc.
- Nozzles and other protruding items usually require paint before insulation.
- Make certain that bull plugs or other small connections are of sufficient length to project through insulation, or make positive note of their location so that insulation can be subsequently cut away to expose the connections. Bull plugs may be required by specification to be seal-welded before insulation.

9.4 Insulation Checklist for Equipment

The following is a checklist for inspection of insulation:

- Check for the use of proper materials.
- Check thickness of insulation and jacketing.
- Check distance between bands, screws, etc.
- Where double layer insulation is used, common joints between layers must be avoided.
- Insulation must be kept dry until properly weatherproofed. Check insulation expansion or contraction joints when required. Check on amount of lap and use of "S" clips on jacketing.
- Check the expansion bands have been installed when specified.
- Check that insulation support rings and stiffener rings and covered with insulation where require.
- Insulation shall be beveled at all flanged connections to allow for removal of bolts without insulation damage.
- Inspect for completely sealed joints on cold insulated equipment.

9.5 Piping

Verify removable/reusable insulation pads are removed and identified prior to starting.

Piping shall be checked for the following, prior to insulation:

- Confirm the completion of all PWHT and testing; i.e., Hydro, Pneumatic, NDE, etc.
- Mechanical check for completion of supports, clips, shoes, guides, stops, branch connections, line size and line number, heat treatment, etc.
- Piping in cold service may require special paint.
- Material surfaces should be free of foreign matter.
- Vertical piping may require insulation supports.

- Remove all temporary supports, brackets, etc
- Ensure that steam and electric tracing systems are complete, if applicable.
- Most of the recommended inspection procedures as listed in the above equipment insulation checklist may apply to piping. A review of applicable piping specifications is recommended for detail requirements.

10. Structural Steel

10.1 Receiving and Storage

Receiving inspection of prefabricated structural steel shall be performed and documented in accordance with this manual.

Mixing of bolts and nuts, even of the same diameter, grade and length, is not permitted. Only certain pretested combinations of bolt lot, nut lot and washer lot, as established by the supplier or by jobsite testing, are permitted to be installed. Even when project specifications do not specifically require lot traceability, the practice of keeping bolt and nut lots separate and controlled is recommended. It is not necessary to record where the specific lots are installed on the structure.

In all situations, it is important to keep fastener components (bolts, nuts and washers) in containers protected from exposure to rain, dew and other forms of condensation under the cover. Most black bolts use a form of water-soluble oil, and this is easily washed off under the above conditions. If not kept in closed containers, this lubricant will also slowly evaporate, particularly in hot, sunny and dry environments.

If the lubrication of black fastener components is lost, or if the bolts become rusty, dirty, gritty or otherwise damage, they must be cleaned and re-lubricated.

Special storage requirements must be met for galvanized fasteners. Galvanized bolts and nuts are to be provided by the supplier as a set. Over tapping of the nuts, necessary to allow the nuts to fit onto the bolt threads, makes thread stripping a possibility. Therefore, the bolt/nut set is to be pre-tested by the supplier to ensure that stripping will not occur, and then shipped together. At the site, galvanized bolts and nuts must be kept together as an assembly. If other nuts are used with the bolts, poor thread fit may result causing high torques or thread stripping. If nuts other than those supplied with the bolts are to be used, pre-testing following ASTM A325 procedures would be required.

Galvanized fastener components are lubricated differently than black fasteners, and this lubricant is generally more durable than the oily finish used on black bolts. Regardless, galvanized fastener components should be protected from the weather.

10.2 Erection

Unless noted otherwise in contract documents, steel construction shall be in accordance with the American Institute of Steel Construction (AISC) Code of

Standard Practice and AISC specification for structural joints using ASTM A325 or A490 bolts.

Any structural alterations which deviate from design must be approved by Design Engineer before the change.

Attachments and connections to any galvanized steel for erection shall be bolted and holes made by drilling or punching; welding to galvanized steel is not permitted. Burning holes is not permitted.

Bearing surfaces and surfaces that will be in permanent contact shall be cleaned of dirt and scale prior to assembly of modules. Any weld slag is to be ground off.

Except when bolt removal is specified on erection drawings, all erection bolts used in welded construction shall be properly tightened and left in place. When erection bolts are to be removed, the holes shall be filled with plug welds.

The specified hole diameter shall not be enlarged without approval by the designated engineer. Enlarging of holes to correct for misfits shall not be made by burning.

It is a requirement that black fasteners be oily to the touch prior to being installed. When compared to oily fasteners, bolts that have lost their lubrication may require as much as twice the torque to install them.

Galvanized fasteners are lubricated in a manner different than black bolts. They are not oily. The nut is the only lubricated component of the assembly. The nut is lubricated with a wax based product by the manufacturer.

Bolted connections using structural bolts and nuts shall conform to the requirements of slopes, washers and joint surfaces of the "Specification for Joints" (AISC). Each bolt shall be tightened so that all fasteners in the joints are "Snug Tight" unless otherwise specified.

When torque wrenches are specified to provide bolt tension, they shall be calibrated and used in accordance with the "Specification for Joints".

Structural joints made with ASTM A490 bolts shall be tightened to the proof load of the bolts per the "Specification for Joints".

Structural joints made with high strength bolts per ASTM A325 shall be installed per previous paragraph only if so specified or indicated as "Slip Critical" or Fully Tensioned on the design or erection drawings.

Hardened washers shall be provided in accordance with the "Specification for Joints" for selected high-strength bolted connection details.

10.3 Structural Bolt Tightening

Bolts shall be tightened by use of methods described in ASTM, A-325 and A-490. Recommended torques are in Table 1.

Structural bolts will be at least flush with the face of the nut. It is not permitted for the bolt end to be below the face of the nut after tightening is complete.

The joint should be snugged first, starting at the most rigid part of the joint. In a joint with a single or double row of bolts, this would be where the steel is already in contact, working towards the end where the steel may not be in contact. If there is solid contact between the steel at all locations, the direction of tightening does not matter. In a bolt pattern with several rows, such as a large web splice in a girder, the bolts in the center of the joint should be snugged first, then proceed to work towards the free edges of the plate. After the joint has been completely snugged, pretensioning (tightening) of the bolts should follow the same systematic pattern used for snugging. In the snug condition, and even in the fully pretensioned condition, there may be cases where gaps remain between the steel. These gaps however, must be away from the bolt holes. Gaps along the edges of parts may be caused by member tolerances, misalignment, shear distortion, welding and heat distortion.

10.4 Pre-installation Testing Requirements

AISC specifications require that all fasteners assemblies (bolt, nut, washer and DTI when used) are tested using the selected installation procedure prior to the fasteners being installed in the structure. The purpose of these procedures is to verify that the crew understands and can properly implement the installation process, and that the process will indeed develop the required minimum bolt pretension when used on the structure. Such procedures are applicable only to high-strength bolts that must be pretensioned (tightened).

PRE-INSTALLATION TESTING REQUIRED TENSION (KIPS)		
Bolt Diameter	**A325 Bolt**	**A490 Bolt**
½	13	16
5/8	20	25
¾	29	37
7/8	41	51
1	54	67
1 1/8	59	84
1 ¼	75	107
1 3/8	89	127
1 ½	108	155

Above values are 5% higher than the required pretension values used for design, actual installation and inspection.

10.5 Turn of Nut Method

Snug the joint so that no gaps exist between the layers of steel at the bolt holes. Apply a few hits with an impact wrench (until solid sound) or apply full effort on a spud wrench.

Inspect the joint to verify that the snug condition has been achieved.

Matchmark each bolt and steel surface in a straight line, going across a corner of the bolt. Also matchmark a nut corner and the steel.

One worker must hold the bolt head as the nut is turned.

Using a systematic approach, apply the required turns as given in Table T2. If there is a sloping surface, but less than 1:20 (3 Deg) underneath either the bolt head or nut, see the alternate turns requirements in Table T3. If the slope exceeds 1:20, a beveled washer is required.

Using visual inspection, verify by using the matchmarks that the turns have been applied to the nut as required by the tables. Also, verify that the bolt did not turn during tightening using the nut matchmarks.

10.6 Re-use of Bolts Previously Tightened

Occasionally, it may be necessary to remove a previously tightened bolt and later re-install it. The specification permits re-use of black A325 bolts only with the engineering approval. Galvanized bolts and A490 bolts cannot be re-used.

Bolts that have been installed to the snug condition and then subsequently loosen when adjacent bolts are snugged are not considered as re-used bolts. Similarly, bolts that are touched up in the pretensioning process are not considered re-used. To be considered as re-use, the bolt must be loosened and removed from the hole.

A325 bolts that have been installed only to the snug condition and then removed can generally be re-used. Snugged-only A490 bolts and galvanized A325 bolts should be considered for re-use only if snugged by hand or if very lightly snugged with an impact wrench.

To check previously snugged and previously tightened A325 bolts to see if they can be re-used, run the nut up the entire length of the bolt threads by hand. If this is possible, the bolt may be re-used. Bolts that have yielded from tightening will stretch in the first few threads (nearest the bolt head), preventing the nut from progressing further up the threads. These bolts should not be re-used.

Because of the over-tapping of the nut threads for galvanized fasteners, this check is not valid for galvanized bolts.

A490 bolts do not have the same ductility that A325 bolts have. A490 bolts may not be re-used.

10.7 General Inspection Procedures

The Quality Control Inspector shall check the following:

- Inspect the materials to verify that they are readily identifiable, have proper markings, and have proper documentation in accordance with the project specifications.

- Inspect the storage methods to ensure that fastener lots are kept separate and identifiable until time for assembly. Galvanized fastener assemblies must be kept together as a unit as shipped by the supplier.
- Verify that adequate lubrication is present on all fasteners to be used.
- Proper grouting of column base plates. Check vertical and horizontal alignment.
- Placement and elevation of all bearing plates.
- Proper welding procedures, weld quality and welder certification. All structural steel welding will conform to AWS D.1.1; however, welders qualified to Section IX will be considered with prior approval by Client Quality Control Dept.
- That engineered drawings are followed.
- If required, observe the rotational-capacity test procedures to verify the quality of the materials and their lubrication.
- Observe the pre-installation testing for each combination of grade, diameter, length and production lot of bolts with the grade, diameter and production lot of nuts that will be used with these bolts. In some cases, the washer diameter and lot is also included as a part of the test assembly. Three assemblies of each combination must be tested at the start of the project, prior to installation
- All bolting material for grade and size and tightness. A bolt shall be placed in each hole of each joint.
- Repair of any coatings damaged during shipment, storage, erection or by field welds. If structures are to be painted, refer to painting procedures of this manual or design engineering.
- Bolting in structural steel is paint marked after torquing to indicate that they are secured in accordance with specifications. The paint shall be placed on an exposed surface and easily visible.

10.8 Inspection of Turn of Nut Method

See General Inspection Procedures – Common to All Installation Methods for pre-installation inspection steps.

- After bolts have been placed in the holes and the joints have been snugged, observe to verify that the joint has been properly snugged as determined by visual appearance. No gaps may be present in the immediate vicinity of the bolt holes, but gaps may be present between layers of steel away from the holes.
- Visually verify the length of bolt used is proper for the grip. The end of the bolt must be at least flush with the face of the nut (not recessed). The maximum stick-out is usually in the range of six threads, but varies by bolt diameter and production tolerances. For shear-bearing joints where the

threads must be excluded from the shear plane, additional verification of bolt length and the direction in which the bolt is oriented is necessary.

- Following inspection for the snug condition, observe the placement of match-marks, if used for these joints. Match-marking is recommended.
- Observe the pretensioning (tightening) of the bolts using the proper techniques of the turn-of-the-nut method. If match-marking is used, observe the marks after tightening to verify that proper rotation has been provided. If no match-marking is used, observe the bolting crew during tightening to verify that the wrench chuck is marked and watched for proper rotation and that the fixed end of the assembly (usually the bolt head) is held during tightening.
- Record that inspection has been completed for this particular group of joints.

10.9 Hole Size Adjustment

The Specifications provide specific hole sizes for the various bolt diameters. These sizes are provided in Table T4. A tolerance of 1/32" larger than the stated whole diameter is permitted to allow for hole deformation and minor reaming.

If reaming beyond the specified hole size is necessary for fit-up, the Site Engineer must be contacted. In certain types of joints, the allowable stress for the bolt and steel will be reduced when the hole is made larger than that provided on the shop drawings. Shear-bearing joints may need to be changed to slip-critical joints when holes become oversized or become slotted in the loaded direction. In some cases, it may be necessary to enlarge the hole to the next larger bolt size and use an appropriately larger bolt diameter.

For slotting holes using a cutting torch, the width of the slot cannot be increased beyond the tabular value, plus the 1/32" tolerance, except that occasional rounded gouges from the torch to 1/16" are permitted. No grinding of the interior of the hole is required unless the structure is dynamically loaded, as designated by the Site Engineer.

For field modifications, holes may be flame-cut with the Engineer's permission. Generally, flame-cut holes in materials to ½" thick require no further work, provided the hole size meets the Table T4 values and tolerance. It is suggested that flame-cut holes be made smaller than the required diameter and reamed to the appropriate finished diameter.

11. Weld Material Control

11.1 Procurement

A certificate of compliance or materials test report (M.T.R.) must be requested from the suppliers on all Code weld materials. The certificate must be traceable to the lot or heat number and material type and grade.

Low hydrogen, mild steel, low alloy, stainless and other exotic welding materials shall be purchased in hermetically-sealed containers.

Bare filler material used for Gas Tungsten Arc Welding (GTAW) process shall be purchased tagged or stamped on both ends with the applicable material designation number to facilitate identity in the field.

11.2 Receiving

Upon receipt of welding material, the Quality Control Department shall verify acceptability of the welding material by inspection for possible shipping damage. Coated electrodes received in broken containers shall be rejected.

If required by Client Specification, a sample of each lot of alloy materials will be verified by Positive Material Identification.

11.3 Storage

All welding material will be stored in a dry area and protected from environmental conditions. Materials will be segregated and stacked according to classification.

Acceptable coated electrodes and bare welding wire shall be controlled by Rod Room attendant.

After opening the hermetically sealed containers, all electrodes that are not used immediately shall be stored in the drying ovens.

Rods exposed to the atmosphere longer than manufactures recommendation shall be disposed of. Rods will not be reconditioned.

Any electrodes that have been directly exposed to moisture will be discarded.

11.4 Storage Ovens

Storage Ovens shall have thermostat controls.

The temperature setting for low hydrogen electrodes shall be maintained at 250 + 25°. The Quality Control Inspector shall spot check the ovens for proper heat, segregation of welding materials and visual appearance of the electrodes, at any time during normal working hours.

Under no circumstances will items other than welding electrodes be placed in the storage ovens.

When possible, store only one type rod in an oven. The oven is to be conspicuously marked with material grade stored.

11.5 Distribution

Prior to any welding operation, the Welding Supervisor or Foreman will coordinate the selection of proper welding material with the Quality Control.

Welding material will be issued by the rod room attendant to the welders only under controlled conditions. It is essential that the type of material issued is as specified for the given weldment and weld procedure. Welding Foreman and

Quality Control Inspectors are responsible for identification of type and grade of weld rod.

The end of each shift or weld assignment, the welder will be responsible for returning all unused welding material to the Rod Control Room. Electrodes that have been kept in a heated rod caddy will be returned to the storage oven.

11.6 Quality Audits and Surveillance

Audits shall be performed on a continuing basis by the Welding Foreman and Quality Control personnel to assure conformance to this procedure and applicable welding procedures.

12. Welding Procedures

12.1 Selection

Weld Procedures will be chosen to match the job scope, engineering and contract requirements.

All WPS's will be approved by Quality Control, the Client, and if applicable Engineering, before welding commences.

Only WPS's that meet the specific job Code requirements shall be used.

12.2 ASME Code Construction

ASME Code Construction generally encompasses work on boiler, boiler piping and pressure vessels. It includes any work performed to which the requirements of Section I or Section VIII, Division 1 of the ASME Boiler and Pressure Vessel Code are legally imposed.

The QA Manager shall be notified immediately whenever Code Construction is to be performed.

ASME Code work must be done in accordance with the Integrated Service Company L.L.C. Quality Control Manual for ASME Code Construction, a Willbros Company.

13. Welder Qualification

13.1 Testing

Quality Control shall have the prerogative to witness all tests and will be notified before any coupons are made ready for qualification acceptance testing.

Welder Continuity on the Welder Performance Qualification Reports will be within the last 6 months for each process that welder uses.

Welders will be tested and approved before a WPQR is written. Essential variables will be recorded on the WPQR.

With Client approval, welders may take a Production Test to Qualify or renew their Continuity.

When more than one welder, process, or filler metal is used to make a test coupon, the range shall be determined for each welder, process or filler metal individually based on the actual weld metal deposited thickness for each welder, process or filler metal.

Test coupons will be bent or radiographed.

13.2 Test Inspection

The inspector shall be attentive to, but not limited to, the following conditions during the test:

a. Ensure the correct qualified Welding Procedure Specification (WPS) is being used.

b. Check for use of proper size, thickness and material of the test coupon.

c. Check for the use of proper electrode and flux materials.

d. Check for proper welding process; i.e. GTAW, GMAW, SMAW, etc.

e. Preheat, if required. Refer to the governing codes/specifications for recommended temperatures for various metals.

f. Cleanliness of bevel. NOTE: It may be necessary to grind the I.D. of the test coupon approximately 1/4" from the bevel edge to remove any mill scale which may cause fusion problems on weld out.

g. Check the root opening.

h. Check for misalignment.

i. Other essential, supplementary and non-essential variables as listed on the WPS are adhered to.

On a pipe test, the welder is not allowed to grind out the root pass from the I.D. side. He or she may grind the root pass from the O.D and re-weld from the O.D.

On a plate test, the use of a grinder and a gouge are permitted.

After the test is completed, the Inspector should check the following:

a. Workmanship of the welder.

b. Check the weld reinforcement, I.D. and O.D., to applicable Code requirements.

c. Check for undercut, I.D. and O.D.

d. Visually check for Incomplete Penetration on the I.D. Incomplete Penetration in excess of that which is acceptable by the applicable Code shall be rejected.

e. Check for cold lap/non-fusion on the O.D. and 1.D.

f. On plate per API 650 and ASME Section IX codes will apply,

The Inspector may request that the coupon be tested by radiography or by bend-testing.

13.3 Radiography/Ultrasonic

a. Welds are to be examined of their length or circumference.

b. Film is to be interpreted to applicable Code.

c. Radiography is to be accomplished in accordance with qualified/approved procedures.

d. Welds that are to be examined by Ultrasonic Testing, testing will be performed to qualified/approved Ultrasonic procedures.

13.4 Guided Bend Test

a. Straps are to be selected and marked by the Welding Supervisor/Inspector as directed by applicable Code or procedure.

b. The welder or welder operator will stamp his initials on the coupon straps before the straps are removed from the coupon. The Welding Supervisor/Inspector is to determine and mark the straps which will require face and root bends.

c. The welder/welder operator is to be responsible for cutting the straps from the coupon. Physical assistance from any other person during this preparation whether it be grinding, cutting or any other procedure which may after the final results of the test, will not be allowed.

d. The straps shall be bent, using the Guided Bend Test Jig, as described in ASME, Section IX, QW-466, or other applicable Code.

e. Interpretation of the Bend Test shall be judged in accordance with ASME, Section IX, QW-163, Acceptance Criteria, or equivalent applicable Codes.

13.5 Welder Acceptance

After the welder has been accepted by the above mentioned test, he will be issued a welding stamp by the WGS Quality Control. His name will be placed on the Qualified Welders Log. A Qualification form shall be issue with his name by the Quality Control Manager.

13.6 Qualification Continuity Log

For welders qualified under ASME, Section IX, a log (Welders Log) must be kept to document that the welder has welded with a process at least once every six (6) months in order to maintain his qualification to weld with that process.

A Welder Performance Qualification Report (WPQR) that is current within the last (6) months may be substituted for a Continuity Log.

14. Production Welding Control

14.1 Welding Procedures

All welding performed on site will conform with qualified welding procedures which shall be submitted to and approved by Client prior to the start of welding activities.

All welders will be qualified to WGS weld procedures.

Copies of the qualified welding procedures shall be maintained on site by the Quality Control Department for reference and permanent retention.

14.2 Welder Performance Qualification

WGS will conduct or supervise the Welder Qualification tests.

Records attesting to the Welder Performance Qualification tests shall be generated and maintained by Quality Control.

The Quality Control Department shall maintain a complete listing of welders and welding operators.

The Inspector will maintain a weld rejection rate per welder and supply current information to the Superintendent.

14.3 Welding Material Control

The Inspector and Foremen shall verify that the welding material used conforms to the welding procedure. No substitutions for the specified material will be made without approval from the QA/QC Manager and Client.

14.4 Fit-Up and Welding

Visual surveillance shall be performed to establish compliance to welding procedures. The inspection parameters listed below are recommended as a guideline:

a. Inspect end preparation and joint configuration as established by applicable weld procedures and engineering specifications.

b. Inspect internal alignment and root opening prior to welding.

c. Check preheat requirements. Refer to the WPS and applicable Code/specifications for recommended time and temperature for various materials.

d. Check tack welds that are to be incorporated into the final weld. Look for proper blend grinding and absence of visual defects.

e. Check for proper welding materials, position and other essential variables of applicable welding procedures and welder qualifications.

f. Check root pass for cracks, porosity, slag, fusion lines and quality workmanship.

g. Inspect completed welds for proper reinforcement. All welds should blend smoothly into the base metal and be free of cold lap or non-fusion at the toe.

h. Inspect welds for surface discontinuities such as undercut. Surface porosity and arc strikes are to be considered an injurious defect and should be repaired.

i. All repairs are to be made in accordance with approved procedures.

j. Each welder shall be responsible for stamping his assigned symbol adjacent to the weld he has made. This will be done with a low stress steel die stamp or a halogen-free paint marker. Weld maps shall be maintained by the Inspector.

14.5 Post Weld Heat Treatment

Procedures for post weld heat treatment shall be submitted to Client Engineering for approval.

Refer to the applicable Code and/or Client specifications for recommended time and temperature requirements for various materials.

The Project Engineer, Client Specifications, QC Manager and applicable Codes shall determine the requirements and methods of post weld heat treatment to be performed. The Inspector will examine the heating equipment and installation per specification and the following checklist:

a. Thermocouple attachment.

b. Insulation.

c. Recorder hook-up.

d. Check chart for correct weld and line identification.

e. Check for proper heating cycle; i.e. specified rate of temperature rise, holding time and cooling rate.

f. Power failures are to be reported to the QC Manager.

g. The Inspector is to make notations on the chart where there are deviations from the required heating cycle.

h. Review charts and attach to inspection reports for filing.

14.6 Quality Control - Weld Numbering System

When the Inspector receives the isometrics from Engineering, a prenumbering system shall be employed. The Inspector must review shop fabricated spool sheets with isometric drawings to check for addition or deletion of field welds. Every field weld within a system or line number shall be numbered consecutively, starting with the number one (1) (in the direction of flow) and continuing to the end of that system.

Alternatively, rack pipe and underground pipe may be marked on the appropriate drawing as the welds are completed and/or become ready for X-Ray.

When a field weld is added between two welds on an isometric, that weld becomes the same weld number as the preceding weld, with a letter designation added after the weld number.

All sockolet connections, weldolet welds, saddle welds, lateralet welds, etc., will be numbered as a weld on the line. Welds on the butt end of fittings will be numbered on the branch line isometric.

In all cases where practicable, weld numbers will be physically marked on the pipe adjacent to the weld with a paint type marker. If the Welding Foreman marks initial weld numbers, the Inspector will verify for accuracy. In addition, the Inspector will verify the line designation number and ISO drawing number are marked on each line and spool piece mark numbers are marked on each spool.

14.7 Nondestructive Examinations

The QC Inspector will log completed welds that have passed a visual inspection.

The Jobsite Inspector in conjunction with Construction Supervision will schedule all NDE examinations.

NDE requirements for a given weld shall be determined by the Inspector in compliance with applicable project specifications, codes and standards.

The Inspector will advise the NDE Technician of welds ready for examination.

All inspections, heat treatments and NDE examinations will be recorded on the Weld Log (which correlate information to all welds on each isometric drawing) to indicate status of each weld. Weld maps (marked up isometric drawings) will be maintained to indicate weld numbers and provide as-built information and traceability.

NDE requirements shall be determined by Client, Engineering and applicable Code.

All pertinent information shall be recorded on the NDE report form.

14.8 Field Welding Inspector's Checklist

a. Specifications

- General Specifications
- Project Specifications
- Client Specifications
- Drawings and Detail Sheets
- Contract or Purchase Order Specifications
- Quality Control System Specifications
- Welding Procedure Specifications
- Nondestructive Testing Procedure Specifications

b. Pre-Job Implementation

- Quality Control System Conferences - All Parties
- Off-Site Fabricators Inspection
- Vendor Inspection
- Procure Quality Control System Equipment, Printing, Supplies

- Compile Qualified Welder List and WPQR's.
- Establish Weld Procedures to be used and receive approval from Client.

c. On-Site Inspection

- Pre-Welding Inspection
- Base Metal: Specification, size, thickness, traceability. Preparation Bevel, Land, Internal Alignment
- Welding Procedure Verification
- Qualified Welder(s) Assignment Verification
- Welding Processes and Consumable Verification: Filler Metal (Specifications, Sizes), Condition Shielding Gas (Quantity, Specifications), Purge Gas (Specifications, Quantity, Method).
- Preheat and interpass temperatures (Method, Control).

d. As-Welding Inspection

- Current Settings and Verification
- Penetration and Fusion
- Technique: Direction, Travel Speed, Heat Input, Bead Width
- Cleaning: Power Tools, Solvent
- Interpass NDE: Magnetic Particle, Liquid Penetrant
- Stray Arc Strikes: Electrode, Contour, Undercut
- Welder Symbol Stamp Applied

e. Post Welding Inspection

- Pre-Stress Relief NDE, Repairs, Repair NDE Stress Relief: Method Controls.
- Brinell Hardness Survey
- Post-Stress NDE: Repairs, Repair Procedure
- Completed Weld Acceptance
- Post-Welding Records and Reports
- Print and/or Spool Sheet Notated

15. Pipe Erection

15.1 Procedures

This procedure covers pipe erection for underground and aboveground requirements. All pipe installations are governed by applicable engineering

specifications and Codes. This procedure is to be used in conjunction with Production Welding Control Procedures, Section 14.

Reference applicable sections of this manual for various procedures as necessary; i.e. Civil, Quality Testing, etc.

15.2 Aboveground Piping

Below are listed some items the Inspector shall be attentive to in pipe and pipe rack inspection:

a. Welds

b. Pipe alignment

c. Check orientation of hand wheels on all valves, branch connections, instrument connections, etc.

d. Conformance to material and fabrication specifications.

e. Material test reports and certificates of compliance on materials to be used.

f. Valves must be mounted with designed flow direction.

g. Pre-fabricated meter runs which must be installed with proper flow direction and tap orientation.

h. Shipping bars must not be removed from expansion joints until after pressure test.

i. Spring-actuated pipe supports which have spring stops for shipping shall not be removed until after pressure test.

j. Correct installation and type of flange gaskets and bolts. Exposed threads of stud bolts shall be approximately the same on both ends. The stud shall be flush with the nut, but not more than five (5) threads. Thread compound shall be put on exposed threads for protection. Client bolt up policy shall prevail over WGS policy.

k. Strainers and traps must be installed with proper flow direction. It is important that the pressure ratings and material of the strainers and traps are as specified.

l. Adequate support.

m. Proper installation of pipe guides, anchors and shoes.

n. Check proper installation of spring hangers, pick-up supports, hangers, dummy supports, etc.

o. Proper installation of spectacle blinds.

p. Verify that proper thread compound is being applied to pipe threads. If threaded pipe connects are seal-welded, then all the threads shall be encompassed in the weld. If connections are seal-welded, thread compounds are not to be used.

q. All flange bolts should be tightened in a manner which will ensure uniform flange contact with the gasket.

r. No oil or pipe dope may be used on any pipe for oxygen service.

15.3 Underground Piping

Prior to use, inspect pipe and fittings for any visual damage.

Fabrication and installation shall be done in strict accordance with job specifications and standards.

Pipe to be installed in clay, shale or rock requires a compacted loam or a fine granular material base.

Pipe to be installed in compacted sand, sandy loam, or granular soil requires no additional base work unless specified on contract drawings.

Pipe runs under roads or other foundations shall be compacted as required in the job specifications and standards.

Sand-filled cloth bags may be used to aid in setting underground lines. These bags need not be removed upon completion of installation.

Application of field coating and wrapping shall be in accordance with underground pipe specifications.

Inspection shall check for the following:

a. Welds are clear of welding spatter.

b. Pipe is clear of loose mill scale, rust, water, oil, grease, dirt, and other foreign matter.

c. Primer is being used which is compatible with the existing line coating system.

d. Proper overlap of tape according to specifications.

e. Coating of valves for complete coverage.

f. Test and inspect coated and wrapped pipe for voids and leaks by means of a holiday detector prior to backfilling.

g. Prior to testing, inspect underground pressure system using underground piping drawings to ensure that proper anchors, supports and thrust blocks have been installed.

15.4 Pre-test Punch-out

Area Craft Forman and WGS Quality Control Inspector will perform a Pre-Test inspection for the following, but not limited to, items:

a. Quality Control shall review all documents, records and reports to verify the completeness of each system and that no further repairs, x-rays, etc. or replacement parts are pending.

b. Coordinate with the Site Manager, Engineer and discipline supervisor, to define areas of responsibility for all personnel in the final test.

c. Visually inspect completed work and compare to the isometrics and drawings,paying specific attention to the following:

- Incomplete work or missing parts.
- Proper installation of blinds.
- Installation of danger/caution signs and other devices to prevent accidental misuse.
- Check all valves.
- General workmanship and appearance conforms to good construction practice.

d. All discrepancies shall be documented and sent to the responsible supervision for corrective action.

e. If required, sign the release to test documentation.

15.5 Pre-Commissioning Start-up Inspection

a. This inspection activity should be performed with the Client Quality Control Department and Operations Personnel. Witness of the inspection by Client inspection will be at their discretion.

b. Typical items of inspection support during this phase of operation are as follows:

- Verify area is free of obstructions and grade of soil is of contract specs
- Verify location of hazards such as power lines underground piping etc.
- Verify local and federal permits are acquired.
- Verify route of entrance, exits, or possible construction roads.
- Verify and locate surveyed center of tank and/or benchmarks.

16. Fabrication and Erection of Pressure Vessels and Storage Tanks.

16.1 Field Fabrication Inspection

a. Welding Qualifications

Prior to start of fabrication, assure that welding procedures and welders have been qualified in accordance with contract specifications and Sections 12 and 13 of this manual.

Examine filler metal to assure it is in accordance with approved procedures and specifications. Audit storage identification and issuing procedures for welding materials.

b. Visual Inspection

Examine mill test reports of materials used for pressure parts to ensure compliance with material specifications.

Obtain copies of mill test reports and mark to indicate vessel parts provided from material listed thereon.

Check that pressure part materials are marked for proper identification. Check transfer of marking on pieces cut from plate.

Check standard flanges for identification type and rating; check dimensions of all special flanges fabricated from plate or forgings.

Examine gaskets and bolting material to assure proper type and size.

Verify that formed heads conform to the specified configuration.

Record code stamping data on heads with welded seams.

Check pipe and fittings for proper type, schedule, material and ratings.

Examine all welds for weld contour, height or reinforcement, mismatch size of fillets, undercuts, pinholes and other defects.

Verify that drain connections are ground flush with the inside contour of the vessel.

Check that the proper radius is ground on the inside corners of all openings.

Check that bolt holes in flanges, unless otherwise specified, straddle the centerline.

Verify the weepholes in the reinforcing rings.

Check for grounding lug, nameplates, and other attachments.

Check that bolt holes in double base rings are properly aligned.

Check that all skirts are vented and have access openings, where required.

Inspect trays for proper material and conformance to drawings.

c. In-Progress Inspection

Inspect materials, especially pressure parts, for finish, damage, laminations, cracks, scars, excessive pitting. Perform a magnetic particle or dye penetrant test on edge surfaces in addition to visual check, when required by specification.

Visually inspect the bevels of heads and plates for welding.

Check alignment of longitudinal and circumferential joints for compliance with Code tolerances. Tack welds used for alignment are not to become part of the joint.

Check fit-up of head to shell and other attachments to the vessel.

See that proper pre-heat is applied when required by welding procedure.

Perform random check of back-gouging on all pressure-resisting welds to assure sound weld joints.

Verify the joint design being employed is in accordance with procedures and specifications.

See that welders identification stamping is in accordance with specification requirements.

Witness or review certified reports of all in-process nondestructive examinations specified, such as Radiography, Magnetic Particle, Liquid Penetrant and Ultrasonic.

d. Measurements

Measure to assure all dimensions and orientations are within tolerances specified on drawings and standards. This normally includes sizes, locations, thickness, projections, levelness and plumb, strapping, peaking, banding, and nozzle orientation.

Mark actual dimensions on an As Built Drawing if measurements are different from approved drawings but within tolerance.

Document out of tolerance dimensions on a Nonconformance Report and initiate corrective action.

e. Final Test

Examine NDE reports for compliance with Code acceptable limits, adequate definition, identification and material or weld defects.

Verify proper recording, documentation and storage of film.

Witness other NDE test or examine certified test reports.

Check for current calibration of NDE test equipment and gauges used in pressure test.

Witness all final pressure or vacuum tests.

Witness all functional tests or other test which may be specified by job scope.

f. Cleaning and Painting

Check to assure that tank has been completely drained of water.

Verify that all foreign material and debris has been removed from tank interior.

Witness testing of internal coatings when required.

When required by specifications, verify surface preparation and paint preparation, type, coverage, thickness and color as required by drawings or purchase order.

g. Documentation

Assemble and retain records and reports for inclusion in the completed job package to Client.

16.2 Field Erection

The following is a general guide for the erection of tanks.

a. Inspect foundation per API 650 tolerances and document on inspection data sheet.

b. Lay bottom following all the governing codes and specifications of API 650.

c. Erect the vertical shell in a manner fulfilling all the requirements of API 650 and ASME codes that apply.

d. Follow OSHA regulations and WGS procedures when using scaffolding for the tank erection.

e. When hanging structure follow WGS drawing and bolting specifications.

f. Laying roof will follow WGS drawings engineered and approved by customer.

g. Hanging and installing ladder will be built per drawing utilizing OSHA regulations.

Willbros Government Services ("WGS")
DAILY PRODUCTON REPORT
(ATTACH ADDITIONAL SHEETS IF NECESSARY)

DATE:

CONTRACT #: WGS PROJECT #:		TITLE AND LOCATION:		REPORT NO.:	
SITE MANAGER:			REPRESENTATIVE:		
AM WEATHER:		PM WEATHER:	MAX. TEMP:		MIN. TEMP:

WORK PERFORMED TODAY

TASKS:

WGS LABOR SUMMARY

NAME	EMPLOYER	TRADE	TIME IN	TIME OUT	HOURS

JOB SAFETY

WAS A JOB SAFETY MEETING HELD THIS DATE? (If YES, attach copy of the meeting minutes)	YES	NO	TOTAL WORK HOURS ON JOB SITE THIS DATE:	
WERE THERE ANY LOST TIME ACCIDENTS THIS DATE? (If YES, attach copy of completed OSHA report)	YES	NO	CUMULATIVE TOTAL OF WORK HOURS FROM PREVIOUS REPORTS:	
WAS CRANE/TRENCHING/SCAFFOLD/HV ELECTRICAL/HIGH WORK DONE? (If YES, attach statement or checklist showing inspection performed)	YES	NO		
WAS HAZARDOUS MATERIAL/WASTE RELEASED INTO THE ENVIRONMENT? (If YES, attach description of incident and proposed action)	YES	NO	TOTAL WORK HOURS FROM START OF CONSTRUCTION:	

LIST SAFETY ACTIONS TAKEN TODAY / SAFETY INSPECTIONS CONDUCTED — Yes — SAFETY REQUIREMENTS HAVE BEEN MET.

EQUIPMENT / MATERIAL RECEIVED TODAY TO BE INCORPORATED INTO WORK

DESCRIPTION	QUANTITY	SHIPPING DOCUMENTS

WGS CONSTRUCTION AND PLANT EQUIPMENT ON THE JOB SITE TODAY

DESCRIPTION	IDLE	RENTED /OWNED	QUANTITY	TIME IN	TIME OUT	HOURS

SUBCONTRACTORS ONSITE TODAY

COMPANY	# OF PERSONNEL	WORK PERFORMED

REMARKS / UNRESOLVED ISSUES / ANY SCHEDULE IMPACTS / PROJECT DELAYS

Printed Name _____ Signature _____ Date _____

DELIVERY ORDER NO.:	CONTRACTOR QUALITY CONTROL REPORT (ATTACH ADDITIONAL SHEETS)	REPORT NO.:	DATE:

PHASE	Y=YES, N=NO, SEE REMARKS; BLANK-NOT APPLICABLE		IDENTIFY DEFINABLE FEATURE OF WORK LOCATION AND LIST PERSONNEL PRESENT
PREPARATORY	THE PLANS AND SPECS HAVE BEEN REVIEWED		Work Location:
	THE SUBMITTALS HAVE BEEN APPROVED.		Pre-Work Evaluation/Site Preparation:
	MATERIALS COMPLY WITH APPROVED SUBMITTALS.		
	MATERIALS ARE STORED PROPERLY.		
	PRELIMINARY WORK WAS DONE CORRECTLY.		
	TESTING PLAN HAS BEEN REVIEWED.		Personnel Present:
	WORK METHOD AND SCHEDULE DISCUSSED		

PHASE	Y=YES, N=NO, SEE REMARKS; BLANK-NOT APPLICABLE		Work Location:	TESTING PERFORMED & WHO PERFORMED TEST
INITIAL	PRELIMINARY WORK WAS DONE CORRECTLY		Accomplishment of Subject Work Tasks	
	SAMPLE HAS BEEN PREPARED / APPROVED.			
	WORKMANSHIP IS SATISFACTORY.			
	TEST RESULTS ARE ACCEPTABLE.			
	WORK IS IN COMPLIANCE WITH THE CONTRACT.			

PHASE	Y=YES, N=NO, SEE REMARKS; BLANK-NOT APPLICABLE			TESTING PERFORMED & WHO PERFORMED TEST
FOLLOW UP	WORK COMPLIES WITH CONTRACT AS APPROVED IN INITIAL PHASE.			

REWORK ITEMS IDENTIFIED TODAY (NOT CORRECTED BY CLOSE OF BUSINESS)	REWORK ITEMS CORRECTED TODAY (FROM REWORK ITEMS LIST)

Remarks:

ON BEHALF OF THE CONTRACTOR, I CERTIFY THIS REPORT IS COMPLETE AND CORRECT AND EQUIPMENT AND MATERIAL USED AND WORK PERFORMED DURING THIS REPORTING PERIOD IS IN COMPLIANCE WITH THE CONTRACT DRAWINGS AND SPECIFICATIONS TO THE BEST OF KNOWLEDGE EXCEPT IN THIS REPORT.

PRINT NAME OF AUTHORIZED QC MANAGER AT SITE	AUTHORIZED QC MANAGER AT SITE SIGNATURE	DATE

GOVERNMENT QUALITY ASSURANCE REPORT	DATE
QUALITY ASSURANCE REPRESENTATIVE'S REMARKS AND/OR EXCEPTIONIS TO THE REPORT	

PRINT NAME OF GOVERNMENT QA REPRESENTATIVE	GOVERNMENT QA REPRESENTATIVE	DATE

SAMPLE

PROJECT TITLE
(Location, State)

SITE PHOTOGRAPHS

SAMPLE

WILLBROS GOVERNMENT SERVICES

JOB NO.: 54118 PREPARED BY: TDA DATE 1/27/2010 Rev 1

CLIENT NAME: NAVFAC CHECKED BY: GH SHEET 1 1

SUBJECT: Welding Procedure Specifications (WPS) & Procedure Qualification Record (PQ OF R)

Material	p No.	Process	Consumable/ Rod	Required Position	Progression	WGS / InServ Weld Procedure	Remarks
(seeP No.)	1	SMAW	7018	6G	↑ UP (ALL)	1-S-1	
(seeP No.)	1	SMAW	E7024	1F	F	1-S-10	
(seeP No.)	1	SMAW	5P {6010)	6G	↓ DOWN(ALL)	1-S-6	
(seeP No.)	1	SMAW	5P / 7018	6G	↑ UP (ALL)	1-S-4	
(seeP No.)	1	GTAW/SMAW	ER70S / 7018	6G	ALL	1-TS-1	

1. Per ASME IX Code Requirements.
2. System -Tanks, Piping & Pipe Attachments or Supports.

INTEGRATED SERVICE COMPANY, L.L.C.
1900 N. 161st. E. AVENUE
TULSA, OKLAHOMA 74116

Welding Procedure Specification (WPS)

WPS No.: 1-S-1 Date: 6/28/1994 Rev. No.: 0

Supporting PQR(s): P1-E-1

Weld Type: **Groove and fillet welds**

BASE METALS (QW-403)
P-No. 1 Thickness Range: 0.1875 in. to 1.5000 in.
to P-No. 1

PREHEAT (QW-406)		**POSTWELD HEAT TREATMENT** (QW-407)	
Minimum Preheat Temperature:	50 °F	PWHT Type:	No PWHT will be performed
Maximum Interpass Temperature:	500 °F	PWHT Temperature :	None °F
Preheat Maintenance:	None after weldment	PWHT Holding Time:	None

	1st Process		
Weld Process / Method	**SMAW / Manual**		
Weld Deposit Limit	0.0000 in. to 1.5000 in.		
POSITION (QW-405)			
Position of Joint	All Positions		
Weld Progression	Vertical up		
FILLER METAL (QW-404)			
AWS Classification	E7018		
SFA Spec. / F-No.	5.1 / 4		
A-No. or Chemical Composition	1		
Filler Metal Trade Name	n/r		
Pass Greater Than ½":	No		
Filler Metal Size (in.)	1/8	5/32	3/16
ELECTRICAL (QW-409)			
Welding Amperage Range	90-160	110-200	200-300
Welding Voltage Range	n/r	n/r	n/r
Travel Speed (in/min)	Var.	Var.	Var.
Max. Heat Input (J/in)	None		
Current Type and Polarity	DCEP (reverse)		
TECHNIQUE (QW-410)			
Peening	None		
Stringer or Weave Bead	Stringer and weave bead		

(1) No peening done with this procedure.
No pass greater than 1/2" allowed.
Preheat to 175F if "T" > 1" and C > 0.30%;To 200F if 1.25 < "T" <= 1.5"

INTEGRATED SERVICE COMPANY, L.L.C.

Welding Procedure Specification (WPS)

WPS No.: 1-S-1 Rev. No.: 0

JOINT DESIGN (QW-402)

Weld Type: Groove and fillet welds

Joint Type	Backing	Root Opening	Groove Angle	Root Face	Groove Radius
Single-V groove	no backing	3/16" max.	50 degree min.	1/8" max.	
Single-bevel groove	no backing	3/16" max.	45 degree min.	1/8" max.	
Single-V groove	gouged & back welded	1/4" max.	50 degree min.	3/16" max.	
Double-bevel groove	gouged & back welded	1/4" max.	45 degree min.	3/16" max.	
Double-V groove	gouged & back welded	1/4" max.	45 degree min.	3/16" max.	
Square groove	T-joint	1/32" max.			
Square groove	no backing	3/32" max.			

Fillet Welds: All (QW-451.4)

Retainers: None

See fabrication drawing.

WELD JOINT DESCRIPTIONS SHOWN ARE NOT INCLUSIVE OF ALL THOSE FOUND ON A JOB. WELD JOINT DESIGN REFERENCE IN AN ENGINEERING SPECIFICATION OR A DESIGN DRAWING SHALL TAKE PRECEDENCE OVER WELD JOINTS SHOWN IN THIS WPS.

Initial and Interpass Cleaning: With wire brush clean 1" both sides of weld joint.

Method of Back Gouging: Grind until all defects are removed.

Minimum preheat must be maintained during thermal cutting, tacking, and welding operations.

Welds shall be cleaned between each pass. When completed, remove all slag and projections.

We certify that the statements in this specification are correct and in accordance with the requirements of Section IX of the ASME Code.

By: David S. Glaves — David S. Glaves — 6/28/1994 — Date — QC Manager

INSERV
INTEGRATED SERVICE COMPANY LLC
A WILLBROS COMPANY

INTEGRATED SERVICE COMPANY, L.L.C.
1900 N. 161st. E. AVENUE
TULSA, OKLAHOMA 74116

Procedure Qualification Record (PQR)

PQR No.: P1-E-1 Date: 3/17/1975 WPS No.: 1-S-1

JOINT DESIGN (QW-402)
Weld Type: Groove weld
Groove Type: Single-V groove
Backing: Open butt, no back weld
Root Opening: 1/8 in. Root Face: 1/16 in.
Groove Angle: 60 °

BASE METALS (QW-403)
Specification Type and Grade:
SA-515, Grade 70 to SA-515, Grade 70
P-No. 1 Group No. 2 to P-No. 1 Group No. 2
Thickness (in.): 0.7500

PREHEAT (QW-406)
Minimum Preheat Temperature: 50 °F
Maximum Interpass Temperature: 500 °F
Preheat Maintenance: None after weldment

POSTWELD HEAT TREATMENT (QW-407)
Type: No PWHT performed
PWHT Temperature: None °F
PWHT Holding Time: None hr.

	1st Process		
Weld Process / Method	**SMAW / Manual**		
POSITION (QW-405)			
Position of Joint	3G - Vertical		
Weld Progression	Vertical up		
FILLER METAL (QW-404)			
AWS Classification	E7018		
SFA Spec. / F-No.	5.1 / 4		
A-No. or Chemical Composition	1		
Filler Metal Trade Name	n/r		
Weld Deposit 't' (in.)	0.7500		
Pass Greater Than ½":	No		
Filler Metal Size (in.)	1/8	5/32	-
ELECTRICAL (QW-409)			
Amperage Used	90-110	110-150	-
Voltage Used	20	22-23	-
Travel Speed (in/min)	4-9	4-9	-
Max. Heat Input (J/in)	None		
Current Type and Polarity	DCEP (reverse)		
TECHNIQUE (QW-410)			
Stringer or Weave Bead	Stringer and weave bead		

(1) Peening was not used with this weld test.
No Pass > 1/2" t.

INTEGRATED SERVICE COMPANY, L.L.C.

Procedure Qualification Record (PQR)

PQR No.: P1-E-1

Tensile Test (QW-150)

Specimen No.	Diameter (in.)	Area (in^2)	Ultimate Total Load (lb)	Ultimate Unit Stress (PSI)	Failure Type and Location
1	0.521	0.213	17100	80300	Weld metal
2	0.521	0.213	17400	81700	Weld metal

Guided Bend Tests (QW-160)

Type and Figure No.	Result	Type and Figure No.	Result
QW-462.2 Side bend	Satisfactory	QW-462.2 Side bend	Satisfactory
QW-462.2 Side bend	Satisfactory	QW-462.2 Side bend	Satisfactory

Hardness Test - Brinell hardness

Location	Readings								
SA-515 HAZ	187	185	180						
Weld Metal	180	170	185						

Welder's Name: Herman Kohlmeyer I.D.: Stamp No.: K

PQR was done and welding of coupon was witnessed by: Cust-O-Fab Inc

Test conducted by: Metlab Testing Services Lab Test No.: P1-E-1

We certify that the statements in this record are correct and that the test welds were prepared, welded, and tested in accordance with the requirements of Section IX of the ASME Code.

By: David Glaves 3/17/1975 QC Manager

David S. Glaves Date

INSERV
INTEGRATED SERVICE COMPANY LLC
A WILLBROS COMPANY

INTEGRATED SERVICE COMPANY, L.L.C.
1900 N. 161st. E. AVENUE
TULSA, OKLAHOMA 74116

Welding Procedure Specification (WPS)

WPS No.: **1-S-10** Date: **7/30/2008** Rev. No.: **0**

Supporting PQR(s): 7024-A

Weld Type: **Groove and fillet welds**

BASE METALS (QW-403)
P-No. 1 Thickness Range: 0.0625 in. to 0.7500 in.
to P-No. 1

PREHEAT (QW-406)
Minimum Preheat Temperature: 60 °F
Maximum Interpass Temperature: 400 °F
Preheat Maintenance: None

POSTWELD HEAT TREATMENT (QW-407)
PWHT Type: No PWHT will be performed
PWHT Temperature : None °F
PWHT Holding Time: None

	1st Process		
Weld Process / Method	**SMAW / Manual**		
Weld Deposit Limit	0.7500 in. maximum		
POSITION (QW-405)			
Position of Joint	Flat only		
Weld Progression	N/A		
FILLER METAL (QW-404)			
AWS Classification	E7024		
SFA Spec. / F-No.	5.1 / 1		
A-No. or Chemical Composition	1		
Pass Greater Than ½":	No		
Filler Metal Size (in.)	5/32	3/16	1/4
ELECTRICAL (QW-409)			
Welding Amperage Range	170-240	220-300	260-350
Welding Voltage Range	n/r	n/r	n/r
Travel Speed (in/min)	Var.	Var.	Var.
Max. Heat Input (J/in)	None		
Current Type and Polarity	DCEP (reverse)		
TECHNIQUE (QW-410)			
Peening	None		
Stringer or Weave Bead	Stringer and weave bead		
Multiple / Single Pass (per side)	Multipass		

INTEGRATED SERVICE COMPANY, L.L.C.

Welding Procedure Specification (WPS)

WPS No.: 1-S-10 Rev. No.: 0

JOINT DESIGN (QW-402)

Weld Type: Groove and fillet welds

Joint Type	Backing	Root Opening	Groove Angle	Root Face	Groove Radius
Single-V groove	No backing	3/16" max	50 deg min	1/8" max	
Single bevel	No backing	3/16" max	45 deg min	1/8" max	
Single-V groove	Gouged & back welded	1/4" max	50 deg min	3/16" max	
Double bevel	Gouged & back welded	1/4" max	45 deg min	3/16" max	
Double-V groove	Gouged & back welded	1/4" max	45 deg min	3/16" max	
Square groove	T-joint	1/32" max			
Square groove	No backing	3/32" max			

Fillet Welds: All fillet sizes on all base metal thicknesses and all diameters.

Retainers: None

WELD JOINT DESCRIPTIONS SHOWN ARE NOT INCLUSIVE OF ALL THOSE FOUND ON A JOB. WELD JOINT DESIGN REFERENCE IN AN ENGINEERING SPECIFICATION OR A DESIGN DRAWING SHALL TAKE PRECEDENCE OVER WELD JOINTS SHOWN IN THIS WPS.

Initial and Interpass Cleaning: With wire brush clean 1 inch (25 mm) on both sides of weld joint

Method of Back Gouging: When required, grind until all defects are removed.

Minimum preheat must be maintained during thermal cutting, tacking, and welding operations.
Welds shall be cleaned between each pass. When completed, remove all slag and projections.

We certify that the statements in this specification are correct and in accordance with the requirements of Section IX of the ASME Code.

By: David Haas — David Haas — 7/30/2008 (Date) — QC Process Manager

INSERV
INTEGRATED SERVICE COMPANY LLC
A WILLBROS COMPANY

INTEGRATED SERVICE COMPANY, L.L.C.
1900 N. 161st. E. AVENUE
TULSA, OKLAHOMA 74116

Procedure Qualification Record (PQR)

PQR No.: 7024-A Date: 10/21/1987 WPS No.: 1-S-10

JOINT DESIGN (QW-402)
Weld Type: Groove weld
Groove Type: Single-V groove
Backing: Open butt, no back weld
Root Opening: 3/32 in. Root Face: 1/8 in.
Groove Angle: 60 °

BASE METALS (QW-403)
Specification Type and Grade:
SA-36 to SA-36
P-No. 1 Group No. 1 to P-No. 1 Group No. 1
Thickness (in.): 0.3750

PREHEAT (QW-406)
Minimum Preheat Temperature: 100 °F
Maximum Interpass Temperature: 400 °F
Preheat Maintenance: None after welding

POSTWELD HEAT TREATMENT (QW-407)
Type: No PWHT performed
PWHT Temperature: None °F
PWHT Holding Time: None hr.

	1st Process		
Weld Process / Method	**SMAW / Manual**		
POSITION (QW-405)			
Position of Joint	1G - Flat		
Weld Progression	N/A		
FILLER METAL (QW-404)			
AWS Classification	E7024		
SFA Spec. / F-No.	5.1 / 1		
A-No. or Chemical Composition	1		
Filler Metal Trade Name	n/r		
Weld Deposit 't' (in.)	0.3750		
Pass Greater Than ½":	No		
Filler Metal Size (in.)	1/8	5/32	3/16
ELECTRICAL (QW-409)			
Amperage Used	195	225	255
Voltage Used	24	27	28
Travel Speed (in/min)	3-5	5-7	6-8
Max. Heat Input (J/in)	None		
Current Type and Polarity	DCEP (reverse)		
TECHNIQUE (QW-410)			
Stringer or Weave Bead	Stringer and weave bead		

(1) Peening was not used with this weld test.

INTEGRATED SERVICE COMPANY, L.L.C.

Procedure Qualification Record (PQR)

PQR No.: 7024-A

Tensile Test (QW-150)

Specimen No.	Width (in.)	Thickness (in.)	Area (in^2)	Ultimate Total Load (lb)	Ultimate Unit Stress (PSI)	Failure Type and Location
1	1.000	0.375	0.375	28000	74700	Base metal
2	1.000	0.375	0.375	28000	74700	Base metal

Guided Bend Tests (QW-160)

Type and Figure No.	Result	Type and Figure No.	Result
QW-462.3(a) Face bend	Acceptable	QW-462.3(a) Root bend	Acceptable
QW-462.3(a) Face bend	Acceptable	QW-462.3(a) Root bend	Acceptable

Hardness Test - Brinell hardness

Location	Readings								
SA-36 BM	198	181	196						
SA-36 HAZ	188	182	190						
Weld metal	160	163	188						

Visual Examination: Satisfactory

Liquid Penetrant Test: Satisfactory

Added hardness, visual and penetrant results January 12, 2009.

Welder's Name: Charlie Wood I.D.: Stamp No.: A

PQR was done and welding of coupon was witnessed by: Cust-O-Fab

Test conducted by: Tulsa Testing and Insp. Lab Test No.: 7024-A

We certify that the statements in this record are correct and that the test welds were prepared, welded, and tested in accordance with the requirements of Section IX of the ASME Code.

By: David S. Glaves — David S. Glaves — 10/21/1987 (Date) — QC Manager

INTEGRATED SERVICE COMPANY, L.L.C.
1900 N. 161st. E. AVENUE
TULSA, OKLAHOMA 74116

INSERV
INTEGRATED SERVICE COMPANY LLC
A WILLBROS COMPANY

Welding Procedure Specification (WPS)

WPS No.: 1-S-6 Date: 2/24/1999 Rev. No.: 2 Date: 7/16/1999

Supporting PQR(s): 99-010016-2

Weld Type: **Groove and fillet welds**

BASE METALS (QW-403)
P-No. 1 Thickness Range: 0.1875 in. to 0.8640 in.
to P-No. 1

PREHEAT (QW-406)
Minimum Preheat Temperature: 60 °F
Maximum Interpass Temperature: 550 °F
Preheat Maintenance: None after weldment

POSTWELD HEAT TREATMENT (QW-407)
PWHT Type: No PWHT will be performed
PWHT Temperature : None °F
PWHT Holding Time: None

	1st Process		
Weld Process / Method	**SMAW / Manual**		
Weld Deposit Limit	0.0000 in. to 0.2500 in.		
POSITION (QW-405)			
Position of Joint	All Positions		
Weld Progression	Any		
FILLER METAL (QW-404)			
AWS Classification	E6010		
SFA Spec. / F-No.	5.1 / 3		
A-No. or Chemical Composition	1		
Filler Metal Trade Name	n/r		
Pass Greater Than ½":	No		
Filler Metal Size (in.)	3/32	1/8	5/32
ELECTRICAL (QW-409)			
Welding Amperage Range	60-90	80-120	110-165
Welding Voltage Range	n/r	n/r	n/r
Travel Speed (in/min)	Var.	Var.	Var.
Max. Heat Input (J/in)	None		
Current Type and Polarity	DCEP (reverse)		
TECHNIQUE (QW-410)			
Peening	None		
Stringer or Weave Bead	Stringer and weave bead		

(1) No peening done with this procedure.
Revision 2: Progression.
Preheat to 175F if "T" > 1" and C > 0.30%; To 200F if 1.25" < "T" <= 1.5"

INTEGRATED SERVICE COMPANY, L.L.C.

Welding Procedure Specification (WPS)

WPS No.: 1-S-6 Rev. No.: 2

JOINT DESIGN (QW-402)

Weld Type: Groove and fillet welds

Joint Type	Backing	Root Opening	Groove Angle	Root Face	Groove Radius
Single-V groove	no backing	3/16" max.	50 degree min.	1/8" max.	
Single-bevel groove	no backing	3/16" max.	45 degree min.	1/8" max.	
Single-V groove	gouged & back welded	1/4" max.	50 degree min.	3/16" max.	
Double-bevel groove	gouged & back welded	1/4" max.	45 degree min.	3/16" max.	
Double-V groove	gouged & back welded	1/4" max.	45 degree min.	3/16" max.	
Square groove	T-joint	1/32" max.			
Square groove	no backing	3/32" max.			

Fillet Welds: All (QW-451.4)

Retainers: None

See fabrication drawing.

WELD JOINT DESCRIPTIONS SHOWN ARE NOT INCLUSIVE OF ALL THOSE FOUND ON A JOB. WELD JOINT DESIGN REFERENCE IN AN ENGINEERING SPECIFICATION OR A DESIGN DRAWING SHALL TAKE PRECEDENCE OVER WELD JOINTS SHOWN IN THIS WPS.

Initial and Interpass Cleaning: With wire brush clean 1" both sides of weld joint.

Method of Back Gouging: When required, grind until all defects are removed.

Minimum preheat must be maintained during thermal cutting, tacking, and welding operations.

Welds shall be cleaned between each pass. When completed, remove all slag and projections.

We certify that the statements in this specification are correct and in accordance with the requirements of Section IX of the ASME Code.

By: David S. Glaves — David S. Glaves — 2/24/1999 (Date) — QC Manager

INTEGRATED SERVICE COMPANY, L.L.C.
1900 N. 161st. E. AVENUE
TULSA, OKLAHOMA 74116

Procedure Qualification Record (PQR)

PQR No.: **99-010016-2** Date: **1/8/1999** WPS No.: **1-S-6**

JOINT DESIGN (QW-402)		**BASE METALS** (QW-403)	
Weld Type:	Groove weld	Specification Type and Grade:	
Groove Type:	Single-V groove	SA-106, Grade B	to SA-106, Grade B
Backing:	Open butt, no back weld	P-No. 1 Group No. 1	to P-No. 1 Group No. 1
Root Opening: 1/8 in.	Root Face: 1/16 in.	Thickness (in.): 0.4320	
Groove Angle: 75 °		Diameter (in.): 6.6250	
PREHEAT (QW-406)		**POSTWELD HEAT TREATMENT** (QW-407)	
Minimum Preheat Temperature:	60 °F	Type:	No PWHT performed
Maximum Interpass Temperature:	350 °F	PWHT Temperature:	None °F
Preheat Maintenance:	None	PWHT Holding Time:	None hr.

	1st Process	2nd Process
Weld Process / Method	**SMAW / Manual**	**SMAW / Manual**
POSITION (QW-405)		
Position of Joint	6G - 45 degree pipe	6G - 45 degree pipe
Weld Progression	Vertical up and down	Vertical up and down
FILLER METAL (QW-404)		
AWS Classification	E6010	E7018
SFA Spec. / F-No.	5.1 / 3	5.1 / 4
A-No. or Chemical Composition	1	1
Filler Metal Trade Name	n/r	n/r
Weld Deposit 't' (in.)	0.1250	0.3070
Pass Greater Than ½":	No	No
Filler Metal Size (in.)	3/32 | - | -	1/8 | - | -
ELECTRICAL (QW-409)		
Amperage Used	90 | - | -	100 | - | -
Voltage Used	23 | - | -	24 | - | -
Travel Speed (in/min)	Var. | - | -	Var. | - | -
Max. Heat Input (J/in)	None	None
Current Type and Polarity	DCEP (reverse)	DCEP (reverse)
TECHNIQUE (QW-410)		
Stringer or Weave Bead	Stringer bead	Stringer bead

(1) Peening was not used with this weld test.
Revised to define root pass progression up, fill passes down.

INTEGRATED SERVICE COMPANY, L.L.C.

Procedure Qualification Record (PQR)

PQR No.: **99-010016-2**

Tensile Test (QW-150)

Specimen No.	Width (in.)	Thickness (in.)	Area (in^2)	Ultimate Total Load (lb)	Ultimate Unit Stress (PSI)	Failure Type and Location
1	0.743	0.399	0.296	24110	81500	Ductile - BM
2	0.745	0.384	0.286	23890	83500	Ductile - BM

Guided Bend Tests (QW-160)

Type and Figure No.	Result	Type and Figure No.	Result
QW-462.2 Side bend	Satisfactory	QW-462.2 Side bend	Satisfactory
QW-462.2 Side bend	Satisfactory	QW-462.2 Side bend	Satisfactory

Hardness Test - Brinell hardness

Location	Readings								
SA-106 BM	150	150	160						
SA-106 HAZ	185	185	190						
Weld Metal	190	190	185						

Welder's Name: Jesse Hobbs I.D.: Stamp No.: JH

PQR was done and welding of coupon was witnessed by: Cust-O-Fab Service Co.

Test conducted by: Sherry Laboratories Lab Test No.: 99-010016-2

We certify that the statements in this record are correct and that the test welds were prepared, welded, and tested in accordance with the requirements of Section IX of the ASME Code.

By: David S. Glaves 1/8/1999 QC Manager

David S. Glaves — Date

INTEGRATED SERVICE COMPANY, L.L.C.
1900 N. 161st. E. AVENUE
TULSA, OKLAHOMA 74116

Welding Procedure Specification (WPS)

WPS No.: 1-S-4 Date: 1/8/1999 Rev. No.: 0

Supporting PQR(s): 99-010016-2

Weld Type: **Groove and fillet welds**

BASE METALS (QW-403)
P-No. 1 Thickness Range: 0.1875 in. to 0.8640 in.
to P-No. 1

PREHEAT (QW-406)
Minimum Preheat Temperature: 60 °F
Maximum Interpass Temperature: 350 °F
Preheat Maintenance: None

POSTWELD HEAT TREATMENT (QW-407)
PWHT Type: No PWHT will be performed
PWHT Temperature : None °F
PWHT Holding Time: None

	1st Process			2nd Process		
Weld Process / Method	**SMAW / Manual**			**SMAW / Manual**		
Weld Deposit Limit	0.2500 in. maximum			0.6140 in. maximum		
POSITION (QW-405)						
Position of Joint	All Positions			All Positions		
Weld Progression	Any			Vertical up		
FILLER METAL (QW-404)						
AWS Classification	E6010			E7018		
SFA Spec. / F-No.	5.1 / 3			5.1 / 4		
A-No. or Chemical Composition	1			1		
Pass Greater Than ½":	No			No		
Filler Metal Size (in.)	3/32	1/8	5/32	3/32	1/8	5/32
ELECTRICAL (QW-409)						
Welding Amperage Range	60-90	80-120	110-165	70-110	90-160	130-220
Welding Voltage Range	n/r	n/r	n/r	n/r	n/r	n/r
Travel Speed (in/min)	Var.	Var.	Var.	Var.	Var.	Var.
Max. Heat Input (J/in)	None			None		
Current Type and Polarity	DCEP (reverse)			DCEP (reverse)		
TECHNIQUE (QW-410)						
Peening	None			None		
Stringer or Weave Bead	Stringer bead			Stringer bead		
Multiple / Single Pass (per side)	Multipass			Multipass		

INTEGRATED SERVICE COMPANY, L.L.C.

Welding Procedure Specification (WPS)

WPS No.: 1-S-4 Rev. No.: 0

JOINT DESIGN (QW-402)

Weld Type: Groove and fillet welds

Joint Type	Backing	Root Opening	Groove Angle	Root Face	Groove Radius
Single-V groove	No backing	3/16" max	50 deg min	1/8" max	
Single bevel	No backing	3/16" max	45 deg min	1/8" max	
Single-V groove	Gouged & back welded	1/4" max	50 deg min	3/16" max	
Double bevel	Gouged & back welded	1/4" max	45 deg min	3/16" max	
Double-V groove	Gouged & back welded	1/4" max	45 deg min	3/16" max	
Square groove	T-joint	1/32" max			
Square groove	No backing	3/32" max			

Fillet Welds: All fillet sizes on all base metal thicknesses and all diameters.

Retainers: None

WELD JOINT DESCRIPTIONS SHOWN ARE NOT INCLUSIVE OF ALL THOSE FOUND ON A JOB. WELD JOINT DESIGN REFERENCE IN AN ENGINEERING SPECIFICATION OR A DESIGN DRAWING SHALL TAKE PRECEDENCE OVER WELD JOINTS SHOWN IN THIS WPS.

Initial and Interpass Cleaning: With wire brush clean 1 inch (25 mm) on both sides of weld joint

Method of Back Gouging: When required, grind until all defects are removed.

Minimum preheat must be maintained during thermal cutting, tacking, and welding operations.
Welds shall be cleaned between each pass. When completed, remove all slag and projections.

We certify that the statements in this specification are correct and in accordance with the requirements of Section IX of the ASME Code.

By: David S. Glaves — David S. Glaves — 1/8/1999 (Date) — QC Manager

INTEGRATED SERVICE COMPANY, L.L.C.
1900 N. 161st. E. AVENUE
TULSA, OKLAHOMA 74116

INSERV
INTEGRATED SERVICE COMPANY LLC
A WILLBROS COMPANY

Procedure Qualification Record (PQR)

PQR No.: 99-010016-2 Date: 1/8/1999 WPS No.: 1-S-4

JOINT DESIGN (QW-402)		BASE METALS (QW-403)	
Weld Type:	Groove weld	Specification Type and Grade:	
Groove Type:	Single-V groove	SA-106, Grade B	to SA-106, Grade B
Backing:	Open butt, no back weld	P-No. 1 Group No. 1	to P-No. 1 Group No. 1
Root Opening: 1/8 in.	Root Face: 1/16 in.	Thickness (in.): 0.4320	
Groove Angle: 75 °		Diameter (in.): 6.6250	

PREHEAT (QW-406)		POSTWELD HEAT TREATMENT (QW-407)	
Minimum Preheat Temperature:	60 °F	Type:	No PWHT performed
Maximum Interpass Temperature:	350 °F	PWHT Temperature:	None °F
Preheat Maintenance:	None	PWHT Holding Time:	None hr.

	1st Process	2nd Process
Weld Process / Method	**SMAW / Manual**	**SMAW / Manual**
POSITION (QW-405)		
Position of Joint	6G - 45 degree pipe	6G - 45 degree pipe
Weld Progression	Vertical up and down	Vertical up and down
FILLER METAL (QW-404)		
AWS Classification	E6010	E7018
SFA Spec. / F-No.	5.1 / 3	5.1 / 4
A-No. or Chemical Composition	1	1
Filler Metal Trade Name	n/r	n/r
Weld Deposit 't' (in.)	0.1250	0.3070
Pass Greater Than ½":	No	No
Filler Metal Size (in.)	3/32 | - | -	1/8 | - | -
ELECTRICAL (QW-409)		
Amperage Used	90 | - | -	100 | - | -
Voltage Used	23 | - | -	24 | - | -
Travel Speed (in/min)	Var. | - | -	Var. | - | -
Max. Heat Input (J/in)	None	None
Current Type and Polarity	DCEP (reverse)	DCEP (reverse)
TECHNIQUE (QW-410)		
Stringer or Weave Bead	Stringer bead	Stringer bead

(1) Peening was not used with this weld test.
Revised to define root pass progression up, fill passes down.

INTEGRATED SERVICE COMPANY, L.L.C.

Procedure Qualification Record (PQR)

PQR No.: **99-010016-2**

Tensile Test (QW-150)

Specimen No.	Width (in.)	Thickness (in.)	Area (in^2)	Ultimate Total Load (lb)	Ultimate Unit Stress (PSI)	Failure Type and Location
1	0.743	0.399	0.296	24110	81500	Ductile - BM
2	0.745	0.384	0.286	23890	83500	Ductile - BM

Guided Bend Tests (QW-160)

Type and Figure No.	Result	Type and Figure No.	Result
QW-462.2 Side bend	Satisfactory	QW-462.2 Side bend	Satisfactory
QW-462.2 Side bend	Satisfactory	QW-462.2 Side bend	Satisfactory

Hardness Test - Brinell hardness

Location	Readings								
SA-106 BM	150	150	160						
SA-106 HAZ	185	185	190						
Weld Metal	190	190	185						

Welder's Name: Jesse Hobbs I.D.: Stamp No.: JH

PQR was done and welding of coupon was witnessed by: Cust-O-Fab Service Co.

Test conducted by: Sherry Laboratories Lab Test No.: 99-010016-2

We certify that the statements in this record are correct and that the test welds were prepared, welded, and tested in accordance with the requirements of Section IX of the ASME Code.

By: David S. Glaves 1/8/1999 QC Manager

David S. Glaves Date

INSERV
INTEGRATED SERVICE COMPANY LLC
A WILLBROS COMPANY

INTEGRATED SERVICE COMPANY, L.L.C.
1900 N. 161st. E. AVENUE
TULSA, OKLAHOMA 74116

Welding Procedure Specification (WPS)

WPS No.: **1-TS-1** Date: **7/20/1994** Rev. No.: **0**

Supporting PQR(s): 92-159-1

Weld Type: **Groove and fillet welds**

BASE METALS (QW-403)
P-No. 1 Thickness Range: 0.1875 in. to 1.5000 in.
to P-No. 1

PREHEAT (QW-406)
Minimum Preheat Temperature: 200 °F
Maximum Interpass Temperature: 550 °F
Preheat Maintenance: None after weldment

POSTWELD HEAT TREATMENT (QW-407)
PWHT Type: No PWHT will be performed
PWHT Temperature : None °F
PWHT Holding Time: None

	1st Process			2nd Process		
Weld Process / Method	**GTAW / Manual**			**SMAW / Manual**		
Weld Deposit Limit	0.0000 in. to 0.3750 in.			0.0000 in. to 1.1250 in.		
POSITION (QW-405)						
Position of Joint	All Positions			All Positions		
Weld Progression	Any			Vertical up		
GAS (QW-408)						
Shielding Gas / CFH	100% Argon / 27-36					
Trailing Gas / CFH	None / -					
Backing Gas / CFH	None / -					
FILLER METAL (QW-404)						
AWS Classification	ER70S-2			E7018		
SFA Spec. / F-No.	5.18 / 6			5.1 / 4		
A-No. or Chemical Composition	1			1		
Filler Metal Trade Name	n/r			n/r		
Filler Metal Product Form	Bare (Solid)					
Consumable Insert	None					
Pass Greater Than ½":				No		
Filler Metal Size (in.)	1/16	3/32	1/8	5/32	3/16	7/32
ELECTRICAL (QW-409)						
Welding Amperage Range	70-150	80-180	130-275	130-220	200-300	250-350
Welding Voltage Range	n/r	n/r	n/r	n/r	n/r	n/r
Travel Speed (in/min)	Var.	Var.	Var.	Var.	Var.	Var.
Max. Heat Input (J/in)	None			None		
Current Type and Polarity	DCEN (straight)			DCEP (reverse)		
Tungsten Type / Size	EWTh-2 / 1/16" - 3/16"					
Pulsed Current	None					
TECHNIQUE (QW-410)						
Peening	None			None		
Stringer or Weave Bead	Stringer and weave bead			Stringer and weave bead		
Multiple / Single Pass (per side)	Multipass					
Nozzle / Gas Cup Size	# 5 to # 10					

(1) No peening done with this procedure.
No pass greater than 1/2" allowed.
Preheat to 200 Deg.F.for repairs.
Preheat to 175F if "T" > 1" and C > 0.30%:To 200F if 1.25 < "T" <= 1.5"

INTEGRATED SERVICE COMPANY, L.L.C.

Welding Procedure Specification (WPS)

WPS No.: 1-TS-1 Rev. No.: 0

JOINT DESIGN (QW-402)
Weld Type: Groove and fillet welds

Joint Type	Backing	Root Opening	Groove Angle	Root Face	Groove Radius
Single-V groove	no backing	3/16" max.	50 degree min.	1/8" max.	
Single-bevel groove	no backing	3/16" max.	45 degree min.	1/8" max.	
Single-V groove	gouged & back welded	1/4" max.	50 degree min.	3/16" max.	
Double-bevel groove	gouged & back welded	1/4" max.	45 degree min.	3/16" max.	
Double-V groove	gouged & back welded	1/4" max.	45 degree min.	3/16" max.	
Square groove	T-joint	1/32" max.			
Square groove	no backing	3/32" max.			

Fillet Welds: All (QW-451.4)
Retainers: None

See fabrication drawing.

WELD JOINT DESCRIPTIONS SHOWN ARE NOT INCLUSIVE OF ALL THOSE FOUND ON A JOB. WELD JOINT DESIGN REFERENCE IN AN ENGINEERING SPECIFICATION OR A DESIGN DRAWING SHALL TAKE PRECEDENCE OVER WELD JOINTS SHOWN IN THIS WPS.

Initial and Interpass Cleaning: With wire brush clean 1" both sides of weld joint.
Method of Back Gouging: Grind until all defects are removed.

Minimum preheat must be maintained during thermal cutting, tacking, and welding operations.
Welds shall be cleaned between each pass. When completed, remove all slag and projections.

We certify that the statements in this specification are correct and in accordance with the requirements of Section IX of the ASME Code.

By: David S. Glaves — David S. Glaves — 7/20/1994 — Date — QC Manager

INSERV
INTEGRATED SERVICE COMPANY LLC
A WILLBROS COMPANY

INTEGRATED SERVICE COMPANY, L.L.C.
1900 N. 161st. E. AVENUE
TULSA, OKLAHOMA 74116

Procedure Qualification Record (PQR)

PQR No.: 92-159-1 Date: 1/10/1992 WPS No.: 1-TS-1

JOINT DESIGN (QW-402)
Weld Type: Groove weld
Groove Type: Single-V groove
Backing: Open butt, no back weld
Root Opening: 1/8 in. Root Face: 1/32 in.
Groove Angle: 60-70 °
None

BASE METALS (QW-403)
Specification Type and Grade:
SA-516, Grade 70 to SA-516, Grade 70
P-No. 1 Group No. 2 to P-No. 1 Group No. 2
Thickness (in.): 0.7500
None

PREHEAT (QW-406)
Minimum Preheat Temperature: 175 °F
Maximum Interpass Temperature: 450 °F
Preheat Maintenance: None after weldment
None

POSTWELD HEAT TREATMENT (QW-407)
Type: No PWHT performed
PWHT Temperature: None °F
PWHT Holding Time: None hr.
N/A

	1st Process	2nd Process
Weld Process / Method	**GTAW / Manual**	**SMAW / Manual**
POSITION (QW-405)		
Position of Joint	1G - Flat	1G - Flat
Weld Progression	N/A	N/A
Notes	None	None
GAS (QW-408)		
Shielding Gas / CFH	100% Argon / 30	
Trailing Gas / CFH	None / -	
Backing Gas / CFH	None / -	
FILLER METAL (QW-404)		
AWS Classification	ER70S-2	E7018
SFA Spec. / F-No.	5.18 / 6	5.1 / 4
A-No. or Chemical Composition	1	1
Filler Metal Trade Name	n/r	n/r
Filler Metal Product Form	Bare (Solid)	
Consumable Insert	None	
GTAW Flux	N/A	
Weld Deposit 't' (in.)	0.1875	0.5625
Pass Greater Than ½":		No
Filler Metal Size (in.)	3/32 | - | -	5/32 | 3/16 | -
ELECTRICAL (QW-409)		
Amperage Used	120 | - | -	175 | 225 | -
Voltage Used	18 | - | -	24 | 28 | -
Travel Speed (in/min)	Var. | - | -	Var. | Var. | -
Max. Heat Input (J/in)	NR	NR
Current Type and Polarity	DCEN (straight)	DCEP (reverse)
Tungsten Type / Size	EWTh-2 / 1/8	
Pulsed Current	None	
TECHNIQUE (QW-410)		
Thermal Processes:	No	No
Stringer or Weave Bead	Stringer bead	Stringer bead
Multiple / Single Pass (per side)	Multipass	Multipass
Nozzle / Gas Cup Size	# 8	

(1) (1) Peening was not used with this weld test.
(2) No Pass > 1/2" t.
10-20-08; corrected typo "No Thermal Processes".

(2) None

Joint Detail Image

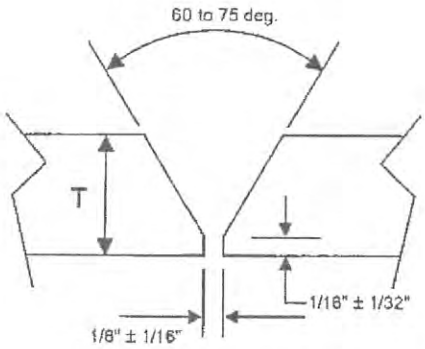

SINGLE VEE GROOVE

INTEGRATED SERVICE COMPANY, L.L.C.

Procedure Qualification Record (PQR)

PQR No.: 92-159-1

Tensile Test (QW-150)

Specimen No.	Width (in.)	Thickness (in.)	Area (in^2)	Ultimate Total Load (lb)	Ultimate Unit Stress (PSI)	Failure Type and Location
1	0.754	0.760	0.573	43400	75700	Base metal
2	0.750	0.755	0.566	43000	76000	Base metal

Guided Bend Tests (QW-160)

Type and Figure No.	Result	Type and Figure No.	Result
QW-462.2 Side bend	Satisfactory	QW-462.2 Side bend	Satisfactory
QW-462.2 Side bend	Satisfactory	QW-462.2 Side bend	Satisfactory

Hardness Test - Brinell hardness

Location	Readings							
SA-516 BM	140	156	146					
SA-516 HAZ	167	174	174					
Weld Metal	149	140	156					

Visual Examination: Satisfactory

None

Welder's Name: Paul Stokes I.D.: - Stamp No.: R

PQR was done and welding of coupon was witnessed by: Integrated Service Company LLC

Test conducted by: Metlab Testing Services Lab Test No.: 92-159-1

We certify that the statements in this record are correct and that the test welds were prepared, welded, and tested in accordance with the requirements of Section IX of the ASME Code.

By: Roy Laird 1/10/1992 MFG QC Manager

Date

APPENDIX G

PROJECT DATA –
PERSONNEL RESUMES & CERTIFICATIONS

Distribution is limited to US Government agencies and their contractors; administrative/operational use within the context of this project. Other request shall be referred to the Naval Facilities Engineering Service Center.

PERSONNEL AND CONTRACTOR QUALIFICATIONS –

Primary

- PROJECT MANAGER

Alternate

- SITE MANAGER
- QUALITY CONTROL MANAGER

James Hagen – Project Manager

James Hagen has over 15 years of experience in the construction, maintenance and modifications of POL, refinery and petrochemical facilities. His POL specification knowledge includes: API, UL, ANSI, NFPA codes and various industry standards in conjunction with OSHA, EPA and DOT government regulations. Mr. Hagen's POL experience includes the installation and repair of above ground storage tanks, process equipment skids, pumps, valves, piping and electrical and controls systems. His experience includes management of all project field activities while supervising trades such as pipefitters, boilermakers, iron workers, riggers and crane operators. He is experienced in the start up and commissioning POL facilities. Prior to his supervisory positions, Mr. Hagen has field experience as a boilermaker, fabricator and QC tester. Mr. Hagen's three most recent relevant projects are listed below.

Education Completed: Some college
Years Experience in field: 15

Relevant Project	Petrologistics Polypropylene Expansion – Pasadena, Texas
Project Description: General Foreman Coordinated and supervised the work of ironworker, rigger, crane operator, boilermaker and pipefitter crews responsible for erecting heater and boiler for petrochemical facility process unit. Responsibilities included scheduling and managing crews, receiving and managing materials, preparation and submittal of RFIs and Change Order information and ensuring that all project specifications and safety policies and procedures were adhered to.	
Relevant Project	Universal Lubricants Expansion – Wichita, Kansas
Project Description: Iron Worker Foreman/ Piping QA/QC Coordinated and supervised crews of ironworkers, riggers and crane operators erecting pipe racks and structural steel structures as well as standing modules and setting equipment. Responsibilities included directing daily activity of crews, managing materials and ensuring that all client specifications and safety policies were adhered to. Performed QA/QC on all new piping systems.	
Relevant Project	BP Southeast Ethanol Program – Phase II, Southeastern United States
Project Description: Construction Manager Construction Manager responsible for all activities at two Phase I Southeast Ethanol Expansion project sites. Work at these sites included the erection/modification of Above Ground Storage tanks, installation of blending skids, pumps, valves, piping and electrical and controls systems. Responsible for supervising contractors performing pipefitting, electrical, mechanical, crane and rigging, civil and paint trades. Duties included scheduling the daily activities of all trades on site, adherence to all client specifications and safety requirements, client terminal personnel interface, and time/material/cost/progress tracking and reporting.	

U.S. ARMY CORPS OF ENGINEERS

USACE LEARNING CENTER
HUNTSVILLE, ALABAMA

NAVFAC

CERTIFICATE

JAMES HAGEN

011100171

has completed the Corps of Engineers and Naval Facility Engineering Command Training Course

CONSTRUCTION QUALITY MANAGEMENT FOR CONTRACTORS - #784

GCA Hawaii - Honolulu, HI	10-16 - 10-18/2012	NAVFAC Pacific	Glenn H. Higuchi
Location	Training Date(s)	Instructional District/ NAVFAC	COM-C Manager
Dennis H. Tanaka	dennis.tanaka@navy.mil	(808) 472-1191	
Facilitator/Instructor	Email	Telephone	Facilitator/Instructor Signature

THIS CERTIFICATE EXPIRES FIVE YEARS FROM DATE OF ISSUE

Director, USACE Learning Center

PERSONNEL AND CONTRACTOR QUALIFICATIONS –

Primary

- SITE MANAGER

Alternate

- SSHO

John Sebok – Site Manager

John Sebok has 11 years of experience in the construction, maintenance and modifications of Industrial and POL facilities. His POL specification knowledge includes: API, UL, ANSI, NFPA codes and various industry standards in conjunction with OSHA, EPA and DOT government regulations. Mr. Sebok's POL experience includes the cleaning, inspection and repair of above and below ground storage tanks, fuel skids, pumps, valves, piping and electrical and controls systems. His experience includes the supervision of all project field activities, which includes supervising relevant subcontractors; trades personnel such as tank cleaners, scaffolders, pipefitters, boilermakers, iron workers, riggers, crane operators and painters. Prior to his supervisory positions, Mr. Sebok has field experience as a tradesmen in the industrial construction field. Mr. Sebok's three most recent relevant projects are listed below.

Education Completed: Some college

Years Experience in field: 6

Relevant Project	NAVFAC ESC – Red Hill Tanks 5 and 17 – Clean, Inspect and Repair
Project Description: Site Manager / Field Supt Responsible for all site activities at the Red Hill Tanks 5 and 17 LOTO, Clean, Inspect and Repair project. Duties include on site interface with NAVFAC ESC NTR and FLC personnel, planning and completing all WGS work activities and subcontractor oversight.	
Relevant Project	NAVFAC ESC – Red Hill JP5 Pipeline Clean, Inspect and Repair
Project Description: Site Manager / Field Supt Responsible for all site activities at the Red Hill JP5 pipeline project LOTO, Clean, Inspect and Repair project. Duties include on site interface with NAVFAC ESC NTR and FLC personnel, planning and completing all WGS work activities and subcontractor oversight.	
Relevant Project	NAVFAC ESC – Oahu Stations - Tanks & Fueling Systems – Clean, Inspect and Repair
Project Description: Site Manager / Field Supt Responsible for all site activities at the Oahu Naval Stations and Annexes - project included LOTO, Clean, Inspect and Repair project. Duties include on site interface with NAVFAC ESC NTR and FLC personnel, planning and completing all WGS work activities and subcontractor oversight.	

PERSONNEL AND CONTRACTOR QUALIFICATIONS –

Primary

- **Site Safety & Health Officer**

Jaymes Barlos – SSHO

Mr. Jaymes Barlos has over 15 years of construction related experience and 6 years of safety related SSHO field experience. The safety related experience was performed in the oversight and monitoring of field activities in the maintenance and modifications of POL facilities; which included environmental control and clean-up activities. His experience includes safety and quality control oversight while supervising activities such as Environmental Site Decontamination and general oversight of trades such as pipefitters, boilermakers and welders. Mr. Barlos has completed the OSHA 30-hour course, and is certified in CPR, First Aid, Abestos Inspection and 40 hr HAZWOPER. He is trained in general safety standards and procedures, confined space, fall protection, LOTO, scaffolding, PPE, hazard communication, respiratory protection, spill prevention, control and countermeasures. Mr. Barlos is trained and certified Competent Person in Confined Space, Fall Protection, Scaffolding, LOTO and respiratory protection. His POL specification knowledge includes: API, UL, ANSI, NFPA codes and various industry standards in conjunction with OSHA, EPA and DOT government regulations. Mr. Barlos POL experience includes maintenance and repair of above ground storage tanks, pumps, valves and piping. Mr. Barlos three most recent relevant projects are listed below.

Education Completed: Bachelor of Arts Degree in English and Communications
Years of Experience in field: 15yrs Construction / 6yrs Safety/Quality

Relevant Project	Willbros Government Services – Oahu, Hawaii
Project Description: Clean, Inspect, Repair AST (Bilge Tank) **Role: Safety Technician/Back-up SSHO** Mr. Barlos performed and coordinated work as part of a small, multi-tasking crew which performed repairs to a large AST Bilge Water tank. His daily responsibilities included safety oversight of the crew; assisting with API 653 out-of-service inspection; monitoring LOTO, confined space, fall protection, scaffolding, atmospheric monitoring and respiratory protection activities.	
Relevant Project	Engineering Remediation Resources Group – Oahu, Hawaii
Project Description: Red Hill Pipe Demolition and Removal **Role: Field Team Leader / SSHO** As the Field Team Leader Mr. Barlos primarily served as Site Safety Officer on most projects. His duties included running safety tailgate meetings, submittal of relevant paperwork per EM 385-1-1 and project specifications, as well as maintaining a high level of safety with 0 incidents on project sites.	
Relevant Project	Tetra Tech – Oahu, Hawaii
Project Description: AST 48 Spill Oversight and Remediation **Role: Site Supervisor / Environmental Specialist / SSHO** Provided support to Dawson Group for an Emergency Response task in reference to leaking Above Ground Storage Tank 48 on Pearl Harbor Naval Base. Responsibilities included: Site Safety, Site Management and Observation, Well Monitoring, Well Gauging, Decontamination Procedures and general Oversight, with an Event Log for Record Keeping.	

PERSONNEL AND CONTRACTOR QUALIFICATIONS –

- **Project Engineer**
- **SME – Piping & Tanks**

Andrew J. Parsons

Summary of Experience

Over twenty five years of experience working in the Oil, Gas, Chemicals and Industrial segments as a mechanical design engineer, project engineer, and project manager. Areas of experience include modeling of thermal growth in structures, piping and vessel systems; finite element analysis; static and dynamic analysis of two phase flow regimes in piping; transient and steady-state flow modeling, ASME B31.3 and B31.4 evaluations to alleviate harmonic vibration; ASME, Sec. VIII, Div.1 vessel and boiler design and design of guyed and self-supported stacks per AISC ASD and LRFD, ASME STS 1. Software used for analysis includes Caesar II, FEPipe, BOS Fluids and STAAD. Petroleum production equipment experience includes design optimization, proposal preparation, detailed equipment design, drawing preparation, project scheduling, and cost analysis.

Project and Work Experience

SR. MECHANICAL ENGINEER

Spectra Energy Partners AIM Project

Project scope consisted of installation of new gas turbine-driven Solar Taurus 60, 7700 HP centrifugal compressor in an existing compressor station in Connecticut, and a new gas turbine-driven Solar Mars 100, 15900 HP centrifugal compressor in an existing compressor station in Rhode Island. Led mechanical design team in performing detailed engineering design for all new equipment and facilities in each of the stations, including compressor buildings, auxiliary buildings, control buildings, inlet filter separators, fuel gas skids, blowdown silencers, standby generators, and air compressors. Assisted in procurement of all equipment and major materials. Produced full set of mechanical IFC design drawing packages for each station.

Florida Power and Light Riviera Beach Energy Center Fuel Gas Compression Project

Project consisted of installation of three new 3,250 HP Neuman & Esser (NEA) 1S VL 130 electric motor-driven reciprocating compressors, driven by TECO Westinghouse electric motors with TMEIC VFD's, in an existing oil terminal facility in south Florida. Led Mechanical Engineering team in developing scope performing detailed engineering design and developing detailed specifications for all new equipment and facilities, including compressors, motors, VFDs, compressor enclosures, inlet filter separators, discharge coolers, PCR enclosure, blowdown silencer, air compressors, and storage tanks. Procured all equipment and major materials. Produced mechanical Issued for Construction (IFC) design drawing package and construction bid specification package. Lead effort to compile all documents and answered technical questions for PHMSA review of pipeline and compressor station.

Enterprise Eagle Ford Compression Project

Project was an EPC scope consisting of installation of new gas turbine-driven centrifugal compressors in three grass-roots compressor stations in the Eagle Ford Shale area of south Texas. Ultimate installation for each station over two phases of construction consisted of four Solar Centaur 50 compressor packages for a total of approximately 20,000 HP per station. Supported Mechanical effort for detailed engineering design of all new equipment and facilities in each of the stations, including compressor buildings, inlet filter separators, discharge coolers,

MCC Buildings, blowdown silencers, air compressors, and storage tanks. Provided construction support for all three stations. Developed API-1104 and ASME Sec IX weld procedures.

CO2 Compressor Station, Denbury Resources

Developed mechanical specifications, vendor submittal reviews and construction support for a compressor station in Wyoming consisting of three each 1,000-hp, electric motor driven, low pressure screw compressors and three each 4,650-hp, electric motor driven, high pressure reciprocating compressors discharging at 1,600 psig, with all ancillaries including scrubbers, aerial coolers, lube oil systems, compressed air system, venting system buildings, lighting, heating and ventilation, glycol dehydration and methanol injection. This was a turnkey project with Willbros constructing all facilities.

CenterPoint Energy Bear Den Crude Oil Gathering Project

Project in the Bakken Shale area of North Dakota consisted of installation of approximately 60 miles each of crude oil and produced water gathering pipelines with associated origin point LACT units, pigging facilities and intermediate metering facilities, as well as a Crude Oil Tank Farm facility. Led mechanical team in performing hydraulics modeling and detailed engineering design for all new equipment and facilities, including storage tanks, transfer pumps, firewater system, filters, control/equipment building, MCC enclosure, LACT units, and meter skids. Specified and evaluated mechanical equipment and major materials. Produced full Issued for Construction (IFC) design drawing packages

MECHANICAL ENGINEER / MANAGING MEMBER

Pipeline integrity including in line inspection, hydrotest methods and procedures, material selection, allowable operating pressure, per DOT CFR49 part 192.

Project management of pipeline projects including remediation, repairs, design and fabrication.

PRINCIPAL MECHANICAL ENGINEER / PROJECT ENGINEER

Coordinate proposals identifying scope, schedule and budget for Greenfield and Brownfield refining and pipeline design build and EPC projects.

Process equipment specification, procurement, bid tab, and selection of vendors.

Manage scope, schedule and budget for Greenfield and Brownfield refining and pipeline design build and EPC projects.

Design of Pressure Vessels per customer specifications, and ASME Section VIII, Div.1 and Div.2.

Design of terminals, loading racks and valve stations.

Design of above ground storage tanks per API 650 & API 653.

Design of both guyed and self-supported Stacks per customer specifications AISC, Allowable Stress Design (ASD), ASME STS-1, and ASME Section VIII, Div. 1.

Analyzing static and dynamic (water hammer, slug and two phase flow, and harmonic flow in piping systems).

Piping analysis/design per customer specifications, ASME B31.1, B31.3, B31.4, and B31.8.

Static and harmonic analysis of structural steel in order to mitigate harmonic vibration in piping and steel systems.

Finite element analysis of nozzles and vessel components.

Interface with clients, fabricators, vendors, all engineering discipline, and other SAIC offices in order to facilitate design and maintain scope schedules, and budget.

Check inspection and testing plans, weld procedures, and all related quality procedures.

Chief Mechanical Engineer

Developed mechanical standards, specifications, and equipment data sheets. Developed standards guidelines to be used for the specification of mechanical equipment.

Developed Mechanical group tool kit, work processes, and manpower loading plans.

Responsible for staffing of group, setting training budgets and preparing man hour estimates for proposals, accountable for meeting project schedule and budget for the entire group for greenfield and brownfield refining and pipeline design build and EPC projects.

QA/QC, Value Engineering Manager

Developed and implemented QA/QC manual and procedures.

Implemented training programs for engineers, designers and project managers on work processes, QA/QC procedures, and value improving practices.

Implement project audits to help ensure that each project is being executed based upon established procedures.

Oversaw efforts to develop Oil, Gas, and Chemicals division Engineering Standards and Specifications.

Mechanical/Structural Engineer

Design of Pressure Vessels per customer specifications, and ASME Section VIII, Div. 1.

Design of both guyed and self-supported Stacks per customer specifications AISC, Allowable Stress Design (ASD), ASME STS-1, and ASME Section VIII, Div. 1.

Wind and seismic analysis per customer specifications, ASCE, UBC, NBC, and SBC.

Design of Flare Derricks, Platform Support Structures, Pipe Racks and Skids per customer specifications, AISC, ASD, and LRFD. Piping design per customer specifications, ASME/ANSI B31.1 and B31.3.

Design of Process, and Boiler Burners per customer specifications, AISC, ASD, and ASME Section VIII, Div. 1.

Mechanical/Structural Engineer

Design of Watertube and Firetube Boilers per customer specifications, ASME Section I, ASME Section VIII, Div. 1, UG-120(d), and TEMA.

Design of Pressure Vessels per customer specifications, and ASME Section VIII, Div. 1 Design of both guyed and self-supported Stacks per customer specifications AISC, Allowable Stress Design (ASD), ASME STS-1, and ASME Section VIII, Div. 1.

Wind and seismic analysis per customer specifications, ASCE, UBC, NBC, and SBC.

Design of Flare Derricks, Platform Support Structures, Pipe Racks and Skids per customer specifications, AISC, ASD, and LRFD.

Piping design per customer specifications, ASME/ANSI B31.1 and B31.3. Design of Process, Boiler, and Duct Burners per customer specifications, AISC, ASD, and ASME Section VIII, Div. 1.

Responsible for scheduling all work done within John Zink's Structural Engineering Department.

Responsible for selecting and overseeing structural sub-contract engineering firms.

Mechanical Engineer

Quality Control Manager of ASME Section I, and ASME Section VIII, Div. 1 code shop. Design alteration and repair of Pressure Vessels and Boilers per ASME code and The National Board Inspection Code.

Piping specifications and design per ASME/ANSI B31.1 & B31.3 codes. Storage Tank design per API-650. ASME Section IX weld procedures and performance certifications.

Material procurement and certification per ASME Section II Parts A & B.

Procurement and certification of welding rod, electrodes, and filler metals per ASME Section II, Part C. Filing of all appropriate data reports with the National Board of Boiler and Pressure Vessel Inspectors.

Structural steel design per the AISC, ASD code. Concrete design and pump sizing.

Engineering Technician

Calibration and installation of Data Acquisition Systems, collect and analyze data. Evaluate New Mexico State University Sewer System.

Research Assistant

Research and testing of internal combustion engines and farm equipment Design and fabrication of equipment, welding, machining, and equipment operation. Calibrate and install Data Acquisition Systems, collect and analyze data.

Registrations

Professional Engineer: Florida (#74237), Oklahoma (#17919)

Professional Memberships

National Council of Engineering Examiners #14476

American Society of Mechanical Engineers

Education

B.S., Mechanical Engineering, New Mexico State University, Las Cruces, NM

Previous Employers

A.J. Parsons Engineering and Consulting, PLLC / 2011

SAIC Energy, Environment and Infrastructure, LLC / 1997 to 2011

Callidus Technologies / 1996 to 1997

John Zink Co. / 1991 to 1996

Western Environmental Management, Inc. / 1988 to 1991

J&G Engineering Corp. / 1987 to 1988

Agricultural Engineering Dept., NMSU / 1985 to 1987

PERSONNEL AND CONTRACTOR QUALIFICATIONS –

- **Quality Control Manager**
- **API 653 Inspector**

Matthew Halderman – QC Manager

Matthew Halderman has 19 years of experience in the construction, maintenance and modifications of Industrial and POL facilities. His POL specification knowledge includes: API, AWS, ISO, UL, ANSI, NFPA codes and various industry standards in conjunction with OSHA, EPA and DOT government regulations. Mr. Halderman's POL experience includes being a fitter / welder for tank maintenance and new tank construction. His experience includes the supervision, as a Construction Manager, of all project field activities, which includes supervising relevant subcontractors; trades personnel such as tank cleaners, pipefitters, boilermakers, iron workers, riggers, crane operators and painters. His previous experience also includes QA/QC management, tank fabrication and tank maintenance. Mr. Halderman's three most recent relevant projects are listed below.

Education Completed: AWS CWI Certified;

IRIS- NDE Level II MT, PT, RT;

API TES;

API 650/653

Years of Experience in field: 19

Relevant Project	Willbros Downstream
Project Description: Construction Manager / QA/QC Manager Responsible for oversight of all site activities and direct supervision of welders, NDE Technicians, ironworkers, boilermakers and crane operators. Duties included subcontractor management, QA/QC Management, submittal of RFIs, schedule conflict resolution and safety procedure compliance.	
Relevant Project	Willbros Downstream
Project Description: Project Superintendent- New Construction and Tank Repair Coordinated and supervised crews of welders, riggers, NDE inspectors, and crane operators. Responsibilities included directing daily activities, performing QA/QC inspections, procurement and ensuring all client specifications and safety policies were adhered to.	
Relevant Project	Integrated Service Company
Project Description: Field Supervisor / Foreman Directly coordinated and supervised crews of welders, riggers, NDE inspectors, and crane operators. Responsible to perform QA/QC checks of field work to confirm compliance with engineered drawings and project specifications.	

(b) (6)

[redacted]

WILLBROS Downstream

VISUAL ACUITY RECORD

We certify that Matt Halderman has sucessfully passed a Jaeger 1 vision test, and is capable of distinguishing and differentiating contrast between colors in the test methods he or she has been qualified for. This test shall be administered annually from the date shown below.

David Haas	2/20/2011
Company Officer	Date

RECERTIFICATION

David Haas	2/20/2012
Company Officer	Date
David Haas	2/20/2013
Company Officer	Date
David Haas	2/20/2014
Company Officer	Date
Company Officer	Date
Company Officer	Date
Company Officer	Date
Company Officer	Date
Company Officer	Date

WILLBROS Downstream

CERTIFICATION OF LIQUID PENETRANT EXAMINER

In accordance with the requirements of paragraph 8 - 2 in Appendix 8 of ASME Section VIII Division I and ASNT SNT-TC-1A, we hereby certify that Matt Halderman is competent in the technique of Liquid Penetrant Examination and has the education and training in accordance with the written practice for Level II, including performing the examination, interpretation and evaluation of the results.

David Haas	2/20/2011
Company Officer	Date

RECERTIFICATION

We hereby recettify the above named individual in Liquid Penetrant Examination based on demonstrated ability through continued performance.

David Haas	2/20/2012
Company Officer	Date
David Haas	2/20/2013
Company Officer	Date
D_a_v_id_Ha_as -- ---	2/20/2014
Company Officer	Date
Company Officer	Date
Company Officer	Date
Company Officer	Date

WILLBROS Downstream

CERTIFICATION OF RADIOGRAPHIC FILM INTERPRETATION

We certify that Matt Halderman is competent in the technique and has the education and traninig in accordance with ASNT SNT-TC-1A and the written practice of Willbros Downstr . for Level II Radiographic Film Interpretation.

David Haas	2/20/2011
Company Officer	Date

RECERTIFICATION

We hereby recertify the above named individual in Radiographic Film Interpretation based on demonstrated ability through continued performance.

David Haas	2/20/2012
Company Officer	Date
David Haas	2/20/2013
Company Officer	Date
David Haas	2/20/2014
Company Officer	Date
Company Officer	Date
Company Officer	Date
Company Officer	Date
Company Officer	Date

WILLBROS Downstream

CERTIFICATION OF VACUUM BOX INTERPRETATION

We certify that Matt Halderman is competent in the technique and has the education and traninig in accordance with ASME Section V and API 650 Code Specs.

David Haas	2-20-2-11
Company Officer	Date

RECERTIFICATION

We hereby recertify the above named individual with the Vacuum Box based on demonstrated ability through continued performance.

David Haas	2/20/2012
Company Officer	Date
David Haas	2/20/2013
Company Officer	Date
David Haas	2/20/2014
Company Officer	Date
Company Officer	Date
Company Officer	Date
Company Officer	Date

Hawaiian - Marine Chemist / CIH

Both of the listed Marine Chemist / CIH have worked in Pearl Harbor and Redhill Complex.

Bobby T. Lee, 602, CIH
Marine Chemist Hawaii LLC
94-1136 Pohu Place
Waipahu, HI 96797-4032
Pager: (808) 686-8840
Residence phone: (808) 671-7003
E-mail: leeb007@hawaii.rr.com
Fax: (808) 678-0802

Marley W. Carter, 564
dba Marine Chemist Honolulu
652 Aipo Street
Honolulu, HI 96825
Phone: (808) 285-4811
Fax: (808) 394-8179
E-Mail: marinechemist@hawaii.rr.com

APPENDIX H

PROJECT DATA –
LEAD ABATEMENT WORK & SAFETY PLANS

Distribution is limited to US Government agencies and their contractors; administrative/operational use within the context of this project. Other request shall be referred to the Naval Facilities Engineering Service Center.

Intentionally Left Blank

(Remove page & insert data)

Distribution is limited to US Government agencies and their contractors; administrative/operational use within the context of this project. Other request shall be referred to the Naval Facilities Engineering Service Center.

APPENDIX I

PROJECT DATA –
COATING & PAINT APPLICATIONS & REPAIRS

Distribution is limited to US Government agencies and their contractors; administrative/operational use within the context of this project. Other request shall be referred to the Naval Facilities Engineering Service Center.

WORK PLAN -A

SURFACE PREPARATIONS

REDHILL TANK NO. 5 COATING

COATING OF UNDERGROUND STORAGE TANK

OHAU

Purchase Order No. 54118-042-00

UFGS Specification 09 97 13.15

LOW VOC POLYSULFIDE INTERIOR COATING OF
WELDED STEEL PETROLEUM FUEL TANKS

Date: June 22, 2012

ASI Job No.

Purpose and Intent

The Purpose and Intent of this Work Plan A is to set forth the processes and procedures to be implemented for surface preparation of the interior of Tank no.5, in order to the meet the specific requirements of UFGS Specifications 09 97 13.15(Low VOC Polysulfide Interior Coating of Welded Steel Petroleum Fuel Tanks). This Work Plan outlines the procedures for Safety, Environmental Control, and Quality Control as they apply to the Surface Preparation requirements. This Work Plan describes the phases of coating operations, addresses the sequence of work, and identifies the inspection and testing requirements, procedures and processes that are required to achieve the necessary quality requirements for the project. Requests for changes, modifications or revisions to this Work Plan will be submitted in writing for approval. Modifications to the plan must be approved prior to the respective work commencing. Changes, modifications or clarifications to this Work Plan will be forwarded to Nick Schmid for approval and submittal to the Contracting Officer as required. This Work Plan will be reviewed continuously and revised for increased effectiveness. Specified reference manuals or standards will be available onsite for reference.

TABLE OF CONTENTS WORK PLAN-A

General Notes

1. Project Resources
2. Site Safety Hazard Analysis
3. Work Scheduling and Progress Reports
4. Pre-Surface Preparation Meeting
5. Hold Point Inspections Summary (Surface Preparation)
6. Environmental Control Systems
7. Receipt and Storage of Materials
8. Pre-Surface Preparation Testing and Inspection
9. Surface Preparation
10. Surface Preparation Testing and Inspection
11. Testing Prior to Primer Coat
12. Surface Preparation of Coated Surfaces

GENERAL NOTES

1. Abrasive Media that does not conform to the Mil Spec requirements will be marked Do Not Use and isolated from the storage area. If non-conforming abrasive happens to be used, those areas will be re-blasted with conforming abrasive. The areas of the tank blasted will be defined by part of the tank (Roof, Shell or Floor) that is being blasted. Each new lot of abrasive will be listed on the QC report to the defined area(s) the lot was used.

2. ASI intends to observe the lighting requirements outlined in SSPC Guide NO.12 and defined uses in permit and non permit confined space set up locations in accordance with OSHA 1910. An EasyView™ Light Meter or GE Pocket Light Meter Model 217 or equivalent will be used to measure the foot candles of light around the work areas. The results will be documented on the QC Reports.

3. Changes, modifications or clarifications to this Work plan will be made in writing and forwarded for Approval and submittal to the Contracting Officer as required.

1.0 PROJECT RESOURCES:

1.1 Equipment Resources

1.1.1 Explosion Proof Exhaust Ventilation Fans 4,000 – 10,000 cfm variable (if required)
1.1.2 Dust Collection Equipment (3) 5,000 cfm Dust Units
1.1.3 Interior Tank Scaffolding (booms provided by WGS)
1.1.4 Explosion Proof Lights: General Work Area – 10 foot candles, Surface Prep and Coating Areas- 20 foot candles, Inspection and Test Locations – 50 foot candles
1.1.5 Air Compressor Ingersol Rand (1,170 cfm) w/ Desiccant Air Dryer
1.1.6 Abrasive Blast Pots (3) 600 lbs Pots
1.1.7 Electric Powered Industrial Vacuum
1.1.8 Pressure washers (if needed)
1.1.9 1 ½" Blast Hose with Blast Hose whips and nozzles
1.1.10 Dehumidification equipment (DH Tech DH6500)
1.1.11 Related Quality Control Inspection Equipment
1.1.12 DH Tech- Air Patrol® automated monitoring system or equivalent

1.2 Materials
1.2.1 Abrasive
1.2.1.1 Kleenblast® Abrasive-30/60 mesh.

1.3 Manpower:
- 1.3.1 QCM
- 1.3.2 Project Superintendent
- 1.3.3 Painter(s)
- 1.3.4 Laborer(s)

2.0 SITE SAFETY HAZARD ANALYSIS

A Site Specific Safety Hazard Analysis will be conducted by a Competent Individual, to assess and identify potential and actual physical and mechanical hazards that may or have the potential to cause injury or create or promote adverse health effects. The Hazard Analysis and Hazard Control Measures will be conducted in accordance with Title 29 Code of Federal Regulations 1926.20 "Employer Responsibilities" to include regular and frequent safety inspections. Employee Training will be conducted in accordance with the hazard analysis requirements and documented in accordance with Title 29 CFR 1926.21 to include applicable training requirements prescribed in Performance Based Standards to include EM-385-1-1 and SSPC Guide NO.12 Guide for Illumination of Industrial Painting Projects.
A Safety Management System has been developed to outline the Responsibilities and Authority of Key Personnel involved in Safety Performance and Regulatory Compliance. A copy of the Site Safety Hazard Analysis and Control Measures will be incorporated into the Safety Management System upon the initial site safety inspection.

3.0 WORK SCHEDULING AND PROGRESS REPORTS

Scheduling
The QCM will keep ASI updated with the Progress Schedule that will be developed to detail phases of work, and inspection processes for the scope of services. The Progress Schedule will be communicated to involved parties for scheduling surface preparation activities, inspections and testing processes. The Schedule will be revised as applicable based on actual production, unpredicted inclement weather, and delays created by other parties. The Inspector and ASI Superintendent will make a diligent effort to maintain good communications so that inspections and testing will be performed in a timely manner with the scheduled work processes. Inclement Weather Considerations Local forecast will be utilized to coordinate work activities, to monitor weather changes, particularly if there is a sharp increase in relative humidity and elevated dew points. These will be evaluated on a case by case event in order to predict and assess adverse impacts created by atmospheric conditions. The Inspector and ASI Superintendent will work closely together to ensure weather conditions are interpreted correctly to the Contracting Officer's representative.

4.0 PRE-APPLICATION MEETING

Prior to surface preparation or coating operations, a Pre-Application Meeting will be conducted in accordance with specification section 09 97 13.15, paragraph 1.4.8, with all involved parties to include but may not be limited to:

• Abhe & Svoboda, Inc. Representatives
• Willbros. Government Services Representatives
• NAVY Representatives

Items to be discussed include the following

• Specification Section 09 97 13.15 Surface Preparation Requirements
• Corrective action requirement and procedures
• Review of Work Plan A
• Safety Plan
• Coordination with other sections
• Inspection standards
• Inspection requirements and procedures
• Test Procedures
• Environmental Control Systems
• Test Logs
• Recordkeeping and Reporting

A Daily Planning Meeting will be conducted each morning or as needed or deemed necessary to discuss the scheduled activities. The meeting will be attended by the Inspector and ASI Superintendent. Items will be discussed pertaining to work locations, processes, required testing and inspections. Deviations from the Work Plan or Contract Requirements will require Contracting Officer's approval and a Work Plan revision.

5.0 HOLD POINT INSPECTIONS

Hold Point Inspections will occur throughout the project during specific periods as detailed within Section 09 97 13.15. A Hold Point Inspection can consist of visual inspections and or testing to acquire data results to establish the steps and actions for scheduled surface cleaning processes. The Inspector and ASI Superintendent will conduct inspections and tests at regular intervals and document the findings per requirements. The inspection data results will be forwarded to the QCM for compliance verification signature, and submission to Navy. Calibration documentation for all instruments will be submitted as required. The accuracy of thickness gages will be verified daily and noted on the Quality Control Inspection Report.

Hold Point Inspections (Surface Preparation)

Step	Action
1) Prior to Production	✓ Safety
2) Environmental Conditions Maintain conditions through out the surface preparation and prime coat application to prevent the development of corrosion on blast cleaned surfaces. Continuous monitoring will be performed	✓ Temperature ✓ Humidity ✓ Dew Point ✓ Surface Temperature
3) Abrasive Material Conformance	✓ Verify material meets MIL-A-22262
4) Tank Cleaning 4.a) Initial Blast Cleaning in bowl of tank (test blasting) per 09 97 13.5 – paragraph 3.9.5	✓ Verify work completed ✓ Visual inspection of substrate for profile in excess of 3 mils
5) Pre-Preparation Testing for Surface Contaminants	✓ Presence of Oil or Grease ✓ Surface Soluble Salts Testing ✓ Visual Inspections
6) Abrasive Blast Cleaning	✓ Air Pressure
7) Abrasive Blast Cleanliness	✓ SSPC-SP 10 Cleanliness ✓ Substrate Profile
8) Pre-Application Testing for Surface Contaminants	✓ Presence of Oil or Grease ✓ Surface Soluble Salts Testing ✓ Visual Inspections
9) Pre-Application Testing for Surface Cleanliness	✓ Tape Test

6.0 ENVIRONMENTAL CONTROL SYSTEMS

Interior of Tank

An Environmental Control System (ECS) has been designed to control environmental and atmospheric conditions inside tank. This system consists of a Dehumidification System and Exhaust Ventilation and will be put into service to control the atmospheric conditions during blasting and coating operations. The design plan will detail the systems to be employed for the length of this project. The system will provide ventilation and maintain appropriate humidity and temperature conditions inside the workspace so as to prevent degradation of the prepared steel prior to the application of the specified primer coat. The Dehumidification System and Exhaust Ventilation will provide dilution air for control of vapors in the tank to maintain a safe environment for workers. It must be noted that during application of the coating systems a short duration of elevated humidity may be experienced due to exhausting of the paint vapors. This is a normal function of the system and will not interfere with the work processes or reduce the quality of work in any way.

Environmental Conditions

The efficiency of the Environmental Control System will be evaluated each and every day throughout the surface preparation, coating application and curing phases. The Inspector will measure environmental and ambient conditions throughout the work shifts with the following, but not limited to, equipment: Positector DPM or Sling Psychrometers and Dual Magnetic Surface Thermometers. Dew Point Depression will be calculated from the US Weather Bureau Psychrometric Tables and atmospheric Dew Points compared to the coolest surface temperature will be measured with a calibrated electronic dew point meter that will measure readings directly at the surface. The

instrument must be traceable to NIST. Production activities will only be permitted when the Inspector has measured the environmental conditions to determine the listed requirements in compliance.

7.0 RECEIPT AND STORAGE OF MATERIALS

- ✓ INSPECTION REQUIRED
  - Abrasive material Conformance
  - Abrasive Media Storage

Abrasive Material Conformance
Abrasive media currently on site and media delivered prior to or during surface preparation operations will be inspected to verify conformance with Specification Requirements of MIL-A-22262. The abrasive media manufacturer, will be chosen from the current Qualified Products Database for MIL-A-22262B(2). This certification will be submitted, in the submittal process, that the abrasive meets the Non-metallic Abrasive specification MIL-A-22262. Surface Preparation operations will not be permitted to begin until the abrasive has been approved for use. The Inspector and ASI Superintendent will keep a current inventory record of all approved media. Components not meeting the Specification Requirements will be conspicuously marked and removed from the site.

Abrasive onsite Sampling and Testing Plan

1. QCM 3 day notification of abrasive sampling to COR
2. ASI will obtain a sampling kit (e.g. zip lock plastic bag) and mark/label appropriately (e.g. product, spec number, lot number, contract number, date, intended use, quantity).
3. ASI will make shipping arrangements to ADA Technologies Lab.
4. QCM to inspect sampling.
5. ASI to take samples per techniques and frequency of MIL-A-22262 and put in shipping container ready to be expedited shipping.
6. QCM to ship/mail out sample with Chain of Custody form or arrange for pickup.
7. ADA Technologies to test per Mil Spec Standards and issue test report back immediately.
8. Repeat steps above until find acceptable lot
9. Reblast areas that failed (if applicable).

Abrasive Media Storage
Abrasive media at the jobsite will be stored in a trailer which will keep it dry and out of the elements.

8.0 PRE-SURFACE PREPARATION TESTING AND INSPECTION

- ✓ INSPECTION REQUIRED:
  - Steel Defects
  - Soluble Salts Tests (Chloride, Sulfate, Nitrate Ions)

- Oil and Grease Tests
- Air cleanliness test

Substrate Condition
The substrate will be assessed and inspected for existing conditions by the Inspector to determine the existing conditions of Tank. The visual condition of the substrate will be detailed and documented in the Daily Quality Control Report and the Daily Inspection Checklist. This inspection will be conducted prior to surface preparation for prior to the start of blast cleaning operations. Surface defects such as detailed within SSPC PA-1 will be inspected and properly identified.

Steel Defects
Steel defects such as fins, burs, erection marks, welds, and weld spatter will be addressed by the onsite Inspector. The Inspector will forward the report of conditions to the QCM. Repairs may be performed, as deemed necessary, by others or ASI for steel defects noted.

Soluble Salts Test
At randomly selected locations, soluble salts testing will be conducted at a rate of three (3) tests for the first 1000 ft² and one (1) test for every 2000 ft² thereof. Concentrate testing of bare steel at area of corrosion pitting. Approximately 30% of the tests on bare steel will be performed at welds, divided equally between horizontal and vertical welds. The concentration of soluble salts will be measured and utilized to dictate the necessity of chloride, sulfate, or nitrate ion removal.

For the Interior of the tank, One (1) or more readings greater than Non-detectable for chlorides, sulfates, or nitrates will trigger the need for the removal of soluble salts.

The Inspector will conduct the Soluble Salt Testing as prescribed above utilizing a Chlor*Test "CSN" kit as manufactured by Chlor*Rid International or equal (such as the ARP Soluble Salts Meter Model Number RPCT-07-001) after the tank cleaning prior to blast cleaning and between coating applications. Retain and label test tubes for verification and documentation.

Soluble Salts Removal
Surfaces that are found to be non-compliant shall be pressured washed with potable water only or potable water modified with a soluble salts remover solution, such as Chlor*Rid or equal and retested. This procedure will be performed until the tests show allowable results.

Oil and Grease Test
A Water Mist (Water Break) Test will be utilized to detect the presence of oil or grease on the steel substrate prior to and after surface preparation activities, and between coating applications. A good Visual Inspection, and if deemed necessary a Cloth Rub Test will accompany the Water Break Test to ensure the quality requirements are maintained by the Inspector. Areas exhibiting the presence of oil or grease will be marked for correction prior to allowing further activities. Solvent cleaning in accordance with SSPC SP-1 will be utilized to remove the presence of oil or grease if found. The solvent

cleaning will be continued until results show no detectable presence of oil or grease. Care will be afforded to prevent further contamination by workers and inspection personnel.

Air Cleanliness Test

The compressed air supply used for the abrasive blast cleaning operation will be inspected for cleanliness in accordance with ASTM D 4285. The abrasive blast cleaning air supply will be tested 24 inches from the supply air as close to work area as possible with the abrasive shut off and directed to blotter paper for 60 seconds. The blotter paper will be inspected for the presence of oil, fluids, water or other deleterious materials. The Air Cleanliness Test will be conducted prior to abrasive blast cleaning and every five hours thereafter during continuous blast cleaning activities. The presence of oil, fluids, water or other deleterious materials on the blotter paper are not acceptable and require corrective actions to include equipment maintenance or reconfiguration of the air supply system and resources.

9.0 SURFACE PREPARATION

Tank interior substrates and components scheduled for coating will be abrasive blast cleaned to an SSPC SP-10, Near White Metal Abrasive Blast Cleaning. ASI will use conventional abrasive air blast cleaning methods using non-metallic 30/60 mesh coal slag abrasives for the cleaning operations. ASI intends to use three (3) abrasive blast cleaning operators with a minimum nozzle pressure to achieve the desired surface profile of 2 to 3 mils. The working pressure at the nozzle should be maintained near 100 psi to achieve satisfactory profile results.

10.0 SURFACE PREPARATION TESTING AND INSPECTION

- ✓ INSPECTION REQUIRED
  - Substrate Cleanliness
  - Substrate Profile

Substrate Cleanliness

Substrates to receive abrasive blast cleaning will be inspected for substrate cleanliness periodically throughout the workday and at the end of each shift. The Inspector will inspect the abrasive blast cleaned substrate to ensure that an SSPC SP-10 Near-White Metal Abrasive Blast is achieved prior to the application of the prime coat. Surface preparation testing and initial inspection will be conducted at the completion of the workday and initial blow down to ensure the blast cleaning process is in conformance with the specification requirements.

Substrate Profile

Surface profile measurements will be conducted daily by the Inspector per ASTM D 7127 to ensure compliance with the Specifications during the abrasive cleaning process. The minimum and maximum surface profile depth of 2 to 3 mils will be measured in

accordance with ASTM D 7127 using Rmax as the measure of profile height at a rate of three (3) tests for the first 1000 ft² plus one (1) test for each additional 1000 ft² or part thereof. If approved as an alternate, the surface profile will be measured utilizing Testex Tape (X-Course) and utilizing a spring micrometer in accordance with Method C of ASTM D 4417. The test tape will be attached to Daily Inspection Reports. If the existing profile exceeds the maximum allowable profile, an existing profile evaluation will be performed to determine how to proceed with the work. If the profile, after blasting, is less than the minimum required, the area will be re-blasted until the minimum profile depth is achieved.

11.0 TESTING PRIOR TO PRIMER COAT

- ✓ INSPECTION REQUIRED
  - Environmental Conditions
  - Verify Surface Preparation
  - Soluble Salts Tests
  - Oil and Grease Tests
  - Tape tests

Tape Test

The prepared steel surfaces are required to be clean prior to the application of the primer coat. To test surfaces, apply a strip of 3M Scotch Magic tape #810 against the steel surface leaving one end for easy removal of the tape. Take care not to contaminate the surface with oils from fingers. Remove the cellophane tape using the exposed end and visually inspect. Little or no dust should be on surface. If the area tested is contaminated the area will be cleaned and retested. The tests will be performed by the Inspector at a rate Three (3) tests for the first 1000 ft² plus one (1) test for each additional 1000 ft². The test tape will be attached to Daily Inspection Reports.

Disposal of Used Blast Media

All the used abrasive will be disposed of in accordance with local, state and federal regulations.

12.0 SURFACE PREPARATION OF COATED SURFACES (if necessary)

- ✓ INSPECTION REQUIRED
  - Environmental Conditions
  - Verify Surface Preparation
  - Soluble Salts Test Tests
  - Oil and Grease Tests
  - Tape tests

Surface preparation may become necessary to coated areas if recoat windows are exceeded or the coated surfaces become damaged. If recoat windows are exceeded then Gloss Removal may be completed by either SSPC SP-7 Brush-off Blast Cleaning or Hand Sanding with #150 to #200 wet/dry sandpaper. The de-glossed surfaces will then be pressure washed with clean potable water or wiped down with clean rags soaked with

denatured alcohol to remove dust. For chips and dings the touchup and repairs will be made to small areas that do not expose the steel substrate by brush or daubers depending on the access and location of the repair. Areas found to have exposed steel substrate larger than a dime will be spot cleaned using power tools so as to not cause additional damage to the surrounding surfaces. If the spot is small (dime size) then the area will be feathered back with #80-#120 emery cloth 2 inches back prior to application of the complete system. Inspection controls will be utilized to ensure that repairs are completed in a neat and uniform fashion to the surrounding surfaces. The brushing shall be done so that a smooth coat of coating material is applied as uniformly as possible is obtain the required coating thickness. The repairs will be completed in accordance with SSPC-PA-1. The onsite Inspector will continuously monitor the repairs for compliance.

REFERENCED DOCUMENTS

The following documents will be accessible for review by the Inspector and ASI Superintendent

1. Scope of Work, Specifications, and Drawings.

2. SSPC- QP -1 Library

3. UFGS Section 09 97 13.15, Low Voc Polysulfide Interior Coating of Welded Steel Petroleum Fuel Tanks 2/10

4. ASTM D 4417 Standard Test Methods for Field Measurement of Blast Cleaned Steel

5. ASTM D 7127 Standard Test Method for Measurement of Surface Roughness of Abrasive Blast Cleaned Steel Surfaces Using A Portable Stylus Instrument

6. ASTM D 4285 Standard Test Method for Indicating Oil or Water in Compressed Air

7. ASTM D 7393 Standard Practice for Indicating Oil in Abrasives

8. ASTM D 4414 Standard Practice for Measurement of Wet Film Thickness by Notch Gages

9. ASTM E 337 Standard Test Method for Measuring Humidity with a Psychrometer

WORK PLAN -B

COATING APPLICATIONS

REDHILL TANK NO.5 COATING

COATING OF UNDERGROUND STORAGE TANK

Island of Oahu

PURCHASE ORDER #54118-042-00

UFGS Specification 09 97 13.15

LOW VOC POLYSULFIDE INTERIOR COATING OF

WELDED STEEL PETROLEUM FUEL TANKS

Date: June 23, 2012

ASI Job No. 11005

Abhe & Svoboda, Inc. An Equal Opportunity Employer

Purpose and Intent

The Purpose and Intent of this Work Plan B is to set forth the processes and procedures to be implemented for Coating Application on the interior of the Redhill Underground Storage Tank no. 5, in order to the meet the specific requirements of UFGS Specifications 09 97 13.15(Low VOC Polysulfide Interior Coating of Welded Steel Petroleum Fuel Tanks). This Work Plan outlines the procedures for Safety, Environmental Control, and Quality Control as they apply to the Coating Application requirements. This Work Plan describes the phases of coating operations, addresses the sequence of work, and identifies the inspection and testing requirements, procedures and processes that are required to achieve the necessary quality requirements for the project. Requests for changes, modifications or revisions to this Work Plan will be submitted in writing for approval. Modifications to the plan must be approved prior to the respective work commencing. Changes, modifications or clarifications to this Work Plan will be forwarded to Nick Schmid for approval and submittal to the Contracting Officer as required. This Work Plan will be reviewed continuously and revised for increased effectiveness.

TABLE OF CONTENTS WORK PLAN-B

General Notes

1. Project Resources
2. Site Safety Hazard Analysis
3. Work Scheduling and Progress Reports
4. Pre-Surface Preparation Meeting
5. Hold Point Inspections Summary (Surface Preparation)
6. Environmental Control Systems
7. Receipt and Storage of Materials
8. Pre-Application Testing Prior to First Coat
9. First Coat Application
10. Inspection and D.F.T. Measurements of First Coat
11. Pre-Application Testing Prior to Finish Coat
12. Finish Coat Application
13. Inspection and D.F.T. Measurements of Finish Coat
14. Final Inspection, Holiday Testing and Repair Procedures
15. Completion Inspections

GENERAL NOTES

1. Coating Materials that do not conform to the Mil Spec requirements will be marked Do Not Use and isolated from the storage area.

2. Environmental conditions outside of the parameters as prescribed below will activate a Product Hold during Coating applications. The QC inspector will document the releasing and using of the identified products.

   - Minimum Air / Substrate Temperature 50° F
   - Maximum Air / Substrate Temperature 100° F
   - Minimum Dew Point Depression 18° F below coldest steel surface temperature
   - Concentration of Lower Explosive Limit : Not Determined

4. ASI intends to observe the lighting requirements outlined in SSPC Guide NO.12 and defined uses in permit and non permit confined space set up locations in accordance with OSHA 1910.

5. Pre-Coating Application testing will occur prior to application of any coatings to include the First Coat, Second Coat and any Repairs.

6. Testing and inspection in the form of low DFT mils, holidays, voids, pinholes, blisters and other detrimental conditions will be identified by the QC Inspector.

7. Cure times will be calculated by the QC Inspector throughout the curing process to obtain cure times and establish the Recoat Window and Extended Recoat Window for each coat. At the end of the Coating Application Process the QC Inspector and ASI Superintendent will calculate the Recoat Window.

8. ASI intends on completing gloss removal process only if the recoat windows are exceeded in accordance with specification requirements. The de-glossed surfaces shall be completed with the remaining application of the coating system.

9. Disposal of waste products including spent blast media, empty coating containers, thinner cans and used rags will be in accordance with local, state and federal regulations.

10. Changes, modifications or clarifications to this Work plan will be made in writing and forwarded to the Project Manager for Approval and submittal to the Contracting Officer as required.

1.0 PROJECT RESOURCES:

1.1 Equipment Resources

1.1.1 Explosion Proof Exhaust Ventilation Fans 4,000 – 10,000 cfm variable (if required)
1.1.2 Dust Collection Equipment (3) 5,000 cfm Dust Units
1.1.3 Interior Scaffolding (Boom System provided by WGS)
1.1.4 Explosion Proof Lights: General Work Area – 10 foot candles, Surface Prep and Coating Areas- 20 foot candles, Inspection and Test Locations – 50 foot candles
1.1.5 Air Compressor (375 cfm or larger) w/ Desiccant Air Dryer
1.1.6 56:1, 45:1, 40:1, or 30:1 Airless Spray Pumps (With Ground Wire)
1.1.7 ¼-⅜" Airless Spray Line w/ Airless Spray Gun
1.1.8 Graco XP-70 Heated Plural Component Airless Spray Pump
1.1.9 Airless Spray Tips (011, 013, 015, 017, 019, 021)
1.1.10 Pressure washers – 3700 psi with rotary tips
1.1.11 Dehumidification equipment (as required)
1.1.12 Related Quality Control Inspection Equipment

1.2 Materials
1.2.1 Interior Tank Coatings
1.2.1.1 Premier Lining, Modified Epoxy Novolac Polysulfide Coatings, PCS-TUFF Blue #1100-S and PCS-TUFF Off White #1100-S

1.2.1 Manpower:
1.2.1 Project Manager
1.2.2 Project Superintendent
1.2.3 Painter(s)
1.2.4 Laborer(s)

2.0 SITE SAFETY HAZARD ANALYSIS

A Site Specific Safety Hazard Analysis will be conducted by a Competent Individual, to assess and identify potential and actual physical and mechanical hazards that may or have the potential to cause injury or create or promote adverse health effects. The Hazard Analysis and Hazard Control Measures will be conducted in accordance with Title 29 Code of Federal Regulations 1926.20 "Employer Responsibilities" to include regular and frequent safety inspections. Employee Training will be conducted in accordance with the hazard analysis requirements and documented in accordance with Title 29 CFR 1926.21 to include applicable training requirements prescribed in Performance Based Standards to include EM-385-1-1 and SSPC Guide NO.12 Guide for Illumination of Industrial Painting Projects.
A Safety Management System has been developed to outline the Responsibilities and Authority of Key Personnel involved in Safety Performance and Regulatory Compliance.

A copy of the Site Safety Hazard Analysis and Control Measures will be incorporated into the Safety Management System upon the initial site safety inspection.

3.0 WORK SCHEDULING AND PROGRESS REPORTS

Scheduling
The Project Manager will keep ASI updated with the Progress Schedule that will be developed to detail phases of work, and inspection processes for the scope of services. The Progress Schedule will be communicated to involved parties for scheduling surface preparation activities, inspections and testing processes. The Schedule will be revised as applicable based on actual production, unpredicted inclement weather, and delays created by other parties. The Project Manager, QC Inspector and ASI Superintendent will make a diligent effort to maintain good communications so that inspections and testing will be performed in a timely manner with the scheduled work processes. Inclement Weather Considerations Local forecast will be utilized to coordinate work activities, to monitor weather changes, particularly if there is a sharp increase in relative humidity and elevated dew points. These will be evaluated on a case by case event in order to predict and assess adverse impacts created by atmospheric conditions. The Project Manager, QC Inspector and ASI Superintendent will work closely together to ensure weather conditions are interpreted correctly to the Contracting Officer's representative.

4.0 PRE-APPLICATION MEETING

Prior to surface preparation or coating operations, a Pre-Application Meeting will be conducted with all involved parties to include but may not be limited to:

• Abhe & Svoboda, Inc. Representatives
• Willbros. Government Services Representatives
• QC Inspector
• NAVY Representatives

Items to be discussed include the following

• Specification Section 09 97 13.15 Coating Application Requirements
• Review of Work Plan B
• Safety Management System
• Inspection Procedures and Hold Point Inspections for Coating Applications
• Inspection, Verification, Documentation and Approval Procedures
• Environmental Control Systems
• Recordkeeping and Reporting

A Daily Planning Meeting will be conducted each morning or as needed or deemed necessary to discuss the scheduled activities. The meeting will be attended by the Project Manager, QC Inspector, ASI Superintendent. Items will be discussed pertaining to work locations, processes, required testing and inspections. Deviations from the Work Plan or

Contract Requirements will require Contracting Officer's approval and a Work Plan revision.

5.0 HOLD POINT INSPECTIONS

Hold Point Inspections will occur throughout the project during specific periods as detailed within Section 09 97 13.15. A Hold Point Inspection can consist of visual inspections and or testing to acquire data results to establish the steps and actions for scheduled surface cleaning processes. The QC Inspector and ASI Superintendent will conduct inspections and tests at regular intervals and document the findings per requirements. The inspection data results will be forwarded to the Project Manager for compliance verification.

Hold Point Inspections (Coating Applications)

Step	Action
1) Prior to Production	✓ Safety
2) Environmental Conditions Maintain conditions through out the surface preparation and prime coat application to prevent the development of corrosion on blast cleaned surfaces	✓ Temperature ✓ Humidity ✓ Dew Point ✓ Surface Temperature
3) Coating Material Sample Testing Results are complete	✓ Laboratory Testing and Verification of Conformance
4) Pre-Application Testing for Surface Contaminants Where visual examination or spot testing indicates contamination, perform sufficient testing to verify non-contamination, or to define extent of contamination for appropriate treatment	✓ Visual Inspections ✓ Tape Test ✓ Presence of Oil or Grease ✓ Surface Soluble Salts Testing
5) Mixing Coatings / Pot Life	✓ Environmental Conditions ✓ Ratios ✓ Reduction
6) Application of First Coat	✓ Environmental Conditions ✓ Coverage ✓ Wet Film Thickness
7) First Coat Inspection	✓ Visual Inspection ✓ Environmental Conditions ✓ Dry Film Thickness
8) Cure Time	✓ Recoat Window ✓ Extended Recoat Window
9) Pre-Application Testing for Surface Contaminants Where visual examination or spot testing indicates contamination, perform sufficient testing to verify non-contamination, or to define extent of contamination for appropriate treatment	✓ Visual Inspections ✓ Tape Test ✓ Amine Blush Testing ✓ Presence of Oil or Grease ✓ Surface Soluble Salts Testing
10) Application of Finish Coat	✓ Environmental Conditions ✓ Coverage ✓ Wet Film Thickness
11) Finish Coat Inspection	✓ Visual Inspection ✓ Environmental Conditions ✓ Dry Film Thickness
12) Cure Time	✓ Recoat Window ✓ Extended Recoat Window
13) Cure Time, Immersion Service 14 Days	✓ Recoat Window

Four (4) days with Dehumidification on final coat	✓ Environmental Conditions
14) Holiday Testing NACE RPO 188	✓ Low Voltage Wet Sponge
15) Repairs / Touch-up	✓ Spot Repairs
16) Final Inspection	✓ Total Coating System Inspection

6.0 ENVIRONMENTAL CONTROL SYSTEMS

Interior of Tank no.5
An Environmental and Atmospheric Control System has been designed to control environmental and atmospheric conditions inside the tank. Environmental and Atmospheric controls are a specification requirement for surface preparation operations. Therefore, if weather conditions develop elevated humidity and dew points, all necessary systems will become an essential part of the process to control environmental conditions as needed to maintain the blast quality specified.

Environmental Conditions
The efficiency of the Environmental Control System will be evaluated each and every day throughout the surface preparation, coating application and curing phases. The QC Inspector will measure environmental and ambient conditions throughout the work shifts, Sling Psychrometers and Dual Magnetic Surface Thermometers. Dew Point Depression will be calculated from the US Weather Bureau Psychrometric Tables and atmospheric Dew Points compared to the coolest surface temperature will be measured with a calibrated electronic dew point meter that will measure readings directly at the surface. The instrument must be traceable to NIST. Production activities will only be permitted when the NACE Inspector has measured the environmental conditions to determine the requirements listed below for application of the Intermediate and Topcoat.

- Minimum Air / Substrate Temperature 50° F
- Maximum Air / Substrate Temperature 100° F
- Minimum Dew Point Depression 18° F below coldest steel surface temperature
- Concentration of Lower Explosive Limit :Not Determined

7.0 RECEIPT AND STORAGE OF MATERIALS

- ✓ INSPECTION REQUIRED
  - Coating Storage
  - Coating Sample Test
  - Environmental Conditions

Coating Storage
Materials required for the performance of the scope of services will be shipped, stored and handled in accordance with the material manufacturer instructions, the contract specifications and SSPC PA-1 Guidelines. Coating Materials will be stored in a dry

location maintaining ambient conditions are above 50° F with an ambient air temperature greater than 5° F of the dew-point at all times. The QC Inspector or the ASI Superintendent will inspect the storage facility each day to ensure adequate storage and environmental conditions. A Boxcar Continuous Monitoring Device or equal may be installed to continuously document temperature, humidity and dew points, if required by the specification.

Coating Sample Test(s)
Coating products delivered prior to or during coating operations will be sampled to verify conformance with requirements as detailed in Table II of Section 09 97 13.15. The conformance test results, of the previously tested coatings, would be submitted to the project manager for verification purposes. If there are no previously tested batches available, and because of the following reasons: The very small quantities of coatings needed to complete this project; the location of the project on the Island of Hawaii, Hawaii; the schedule when the work is to be completed; and to accommodate the current shipping requirements of hazardous materials from the job site that may not employ the qualified personnel to ship said "Hazardous Materials.", ASI will request a variance to allow the opportunity to collect samples for testing of the coating products at the point of manufacture or the storage warehouse in lieu of the job site, as specified by the specifications. Each of the item samples would be collected and shipped to an approved testing laboratory for testing to the requirements of Table II of the respective section listed above. Collection at the manufacture facility or storage warehouse may be witnessed by a Government representative or the services of an Independent Coating Consultant may be employed, geographically located to either of these facilities. All samples would be tracked by means of a "Chain of Custody" to assure proper handling. This alternate procedure has been used on previous projects with similar circumstances and has worked very well.

One liter (quart) samples will be collected at random for each batch of base material and proportional samples of each activator based on mix ratio. Samples will be sent to an approved laboratory for testing. Ratios and proportions will be determined by measuring the units by volume to ensure that no out of ratio kits are created and the remaining coating material will be used in the work process. The mixing of partial kits will be utilized for touch up processes so as not to waste coating materials and will be monitored by the QC Inspector to ensure proper mixing is completed at all times. Results of the independent lab tests will be submitted to the CO's Representative. Coating operations will not be permitted to begin until the CO's Representative has approved the test result. The QC Inspector and ASI Superintendent will keep a current inventory and record of all approved products for the coating operations. Components not meeting the appropriate specifications of Table II will be conspicuously marked and removed from the site.

8.0 PRE-APPLICATION TESTING PRIOR TO FIRST COAT

- ✓ INSPECTION REQUIRED:
  - Environmental Conditions
  - Surface Defects

- Surface Cleanliness (Oil or Grease, Soluble Salts)
- Tank Interior Product Verification - Premier Lining, Modified Novolac Polysulfide Coatings

✓ During the course of abrasive blast cleaning and the First Coat application testing will be conducted to ensure that the substrate meets the Surface Preparation Requirements in the Specifications Inspections but must also meet the Pre-Application Testing prior to First Coat application.

9.0 FIRST COAT/PRIMER COAT APPLICATION

✓ INSPECTION REQUIRED:
- Environmental Conditions
- Mixing and Pot Life
- Wet Film Thickness
- Coverage

ASI will accomplish application of the First Coat of PCS 1100 by using a grounded Graco XP-70 Plural Component airless spray pump. The pump size will be a minimum of 58:1 ratio. One spray applicators will be equipped with airless spray guns fitted with .015 – .023 RAC Spray Tip. Spray tip orifice size is dependent upon the actual viscosity at time of application of the Firs Coat.

Tank Interior: ASI intends to apply a PCS 1100 stripe coat by brush prior to the first coat, working the coating material into corners, crevices, bolts, welds, and irregular surfaces in accordance with SSPC-PA-1. Brush application will only be used for small best effort areas. For some crevices PCS 1100 will be applied with daubers to ensure good penetration of the coating materials into tight areas on Shell Surfaces and Miscellaneous Components. No Termination Joints (Cold Joint) will be installed near the welds. Tank coating application will be uniform and continuous.
Cure times will be calculated by the QC Inspector and ASI Superintendent during the start of the First Coat application to include the Stripe Coat and Full First Coat. Cure times will be calculated throughout the curing period to obtain a definite cure time and establish the Recoat window.

Mixing and Pot Life

Mixing Ratio:	PCS 1100:	1 Part A to 1 Part B by Volume (1:1)
Induction Time:	50-60 degrees F –1/2- Hour	

76-80 degrees F –1/4- Hour
81-90 degrees F--1/8- Hour
> 90 degrees F – 5 Minutes Mixing

Pot Life: 75 degrees – 45-90 Minutes

Reduction: No Thinners will be used

Wet Film Thickness Measurements
The Applicators will be equipped with Wet Film Thickness Gauges to measure the application and coverage of the First Coat. WFT of the PCS 1100 First Coat will be approximately 12-15 mils.

Coating Application Monitoring
Prior to starting the First Coat Application the QC Inspector and ASI Superintendent will mark out the cold joint locations for the applicators to square up the intermediate coat (if needed). These are the "Cold Joints" and will be positioned at least six (6) inches away from welds. The Floor area will be one continuous coating application free of any termination joints.

Cure Time Projection
Close attention will be afforded to the curing of coatings to ensure proper sequencing and scheduling of additional coats. Cure times and recoat schedules will be calculated each day based on ambient condition and film thickness. The QC Inspector will maintain a log of activities and events to include the start and stop times of coating application detailing specific areas. The QC Inspector will monitor the temperature of the Air and Substrate and utilize the highest temperature to develop the Recoat Window and Extended Recoat Window. Coating application is scheduled during the day hours and will result in the highest temperature. The QC Inspector will monitor the ambient and surface temperatures and use the calibrated instruments to obtain the highest temperature during application or during the curing time. At the end of each Application Period and during the cure time the QC Inspector will calculate the Recoat Window and record the day and time on the Inspection Report and communicate this period to the Project Manager.

10.0 INSPECTION AND D.F.T. MEASUREMENTS OF FIRST COAT

- ✓ INSPECTION REQUIRED
  - Visual Inspection

- Cure
- Dry Film Thickness
- Coverage
- Surface Contaminates
- Cleanliness

Visual Inspection
A complete visual inspection will be conducted of the applied First Coat to detect defects in the form of coverage, holidays, voids, pinholes, blisters and other detrimental conditions by the QC Inspector

Dry Film Thickness
Dry film thickness measurements of the Primer Coat will be documented in accordance with SSPC PA-2 utilizing a Type II fixed probe gauge. Three (3) measurements will be collected per spot and averaged and five (5) spot measurements will be collected of which the five (5) spot measurements will be averaged. Each spot measurement will be within 80 percent of the minimum dry film thickness and 120 percent of the maximum dry film thickness and the average of the five spot measurements. Testing will be conducted within three (3) 100 square foot locations for the first 1,000 square feet and one (1) 100 square foot location for each additional 1,000 square feet thereafter. Dry Film Thickness measurements will be conducted and gauge calibrated in accordance with SSPC PA-2.

The First Coat will be inspected for surface defects and dry film thicknesses by the QC Inspector. Dry film thickness requirements for the PCS 1100 will be 12 to 15 mils. The Project Manager will review the inspection report and dry film thickness measurement for compliance. Dry Film Thickness measurements outside the requirements will result in a Production Hold requiring touch-up and repair work.

11.0 PRE-APPLICATION TESTING PRIOR TO FINISH COAT

✓ INSPECTION REQUIRED

- Environmental Conditions
- Cure Time
- Surface Contaminates
- Cleanliness
- Product Verification -

Cure Time Projections

RE-COAT WINDOWS ----Epoxy over Epoxy

Temperature degrees F	60-70	71-80	81-90	91-100	101-110	111-120
Recoat Window (Hrs)	36-336	36-240	24-168	24-96	16-48	16-48

Soluble Salts Test
At randomly selected locations, soluble salts testing will be conducted at one half of the prescribed rate for bare steel. The concentration of soluble salts will be measured and utilized to dictate the necessity of chloride, sulfate, or nitrate ion removal.

For the Interior of the tank. One (1) or more readings greater than Non-detectable for chlorides, sulfates, or nitrates will trigger the need for the removal of soluble salts. If contamination is found revert to the specified testing rate for bare steel.

The QC Inspector and will conduct the Soluble Salt Testing as prescribed above utilizing a Chlor*Test "CSN" kit as manufactured by Chlor*Rid International or equal,(ARP Model Number RPCT-07-001) after the high pressure water cleaning prior to blast cleaning and between coating applications. Retain and label test tubes for verification and documentation.

Soluble Salts Removal
Surfaces that are found to be non-compliant shall be pressured washed with potable water only or potable water modified with a soluble salts remover solution, such as Chlor*Rid or equal and retested. This procedure will be performed until the tests show allowable results.

Oil and Grease Test
A Water Mist (Water Break) Test will be utilized to detect the presence of oil or grease on the steel substrate prior to and after surface preparation activities, and between coating applications. A good Visual Inspection, and if deemed necessary a Cloth Rub Test will accompany the Water Break Test to ensure the quality requirements are maintained by the QC Inspector. Areas exhibiting the presence of oil or grease will be marked for correction prior to allowing further activities. Solvent cleaning in accordance with SSPC SP-1 will be utilized to remove the presence of oil or grease if found. Care will be afforded to prevent further contamination by workers and inspection personnel.

Tape Test
The Coated steel surfaces are required to be clean prior to the application of the finish coat. To test surfaces, apply a strip of clear adhesive cellophane tape against the steel surface leaving one end for easy removal of the tape. Take care not to contaminate the surface with oils from fingers. Remove the cellophane tape using the exposed end and visually inspect. Little or no dust should be on surface. If the area tested is contaminated the area will be cleaned and retested. The tests performed will be conducted at one half of the prescribed rate for bare steel by the QC Inspector.

Amine Blush Test

The epoxy coated surfaces are required to be tested for Amine Blush prior to the application of the Finish coat. To test surfaces, using an AMINE BLUSH CHECK kit manufactured by Elcometer, or equal. The tests will be performed by the QC Inspector at a rate Three (3) tests for the first 1000 ft² (100 m²) plus one test for each additional 2000 ft² (200m²). Surfaces that are found to be non-compliant shall be pressured washed with potable water and retested. This procedure will be performed until the tests show allowable results.

12.0 FINISH COAT APPLICATION

- ✓ INSPECTION REQUIRED:
  - Environmental Conditions
  - Mixing and Pot Life
  - Wet Film Thickness
  - Coverage

Environmental Conditions
Environmental conditions will be as stated in the minimum and maximum requirements. The QC Inspector will inspect product mixing and monitor pot life during the Intermediate Coat application.

Mixing and Pot Life

Mixing Ratio:	PCS 1100:	1 Part A to 1 Part B by Volume (1:1)
Induction Time:	50-60 degrees F –1/2- Hour 76-80 degrees F –1/4- Hour 81-90 degrees F--1/8- Hour > 90 degrees F – 5 Minutes Mixing	
Pot Life:	75 degrees – 45-90 Minutes	
Reduction:	No Thinners will be used	

Wet Film Thickness Measurements
The Applicators will be equipped with Wet Film Thickness Gauges to measure the application and coverage of the Finish Coat. WFT of the Finish coat will be approximately 12-15 mils for the Finish Coat.

Coating Application Monitoring
Prior to starting the Intermediate Coat Application the QC Inspector and ASI Superintendent will mark out the cold joint locations for the applicators to square up the intermediate coat (if needed). These are the “Cold Joints” and will be positioned at least

six (6) inches away from welds. The Floor area will be one continuous coating application free of any termination joints.

ASI will accomplish application of the Finish Coat of PCS 1100 by using a grounded Graco XP-70 Plural Component airless spray pump. The pump size will be a minimum of 58:1 ratio. One spray applicators will be equipped with airless spray guns fitted with .015 – .023 RAC Spray Tip. Spray tip orifice size is dependent upon the actual viscosity at time of application of the Finish Coat.

13.0 INSPECTION & D.F.T. MEASUREMENTS OF FINISH COAT

- ✓ I INSPECTION REQUIRED
  - Visual Inspection
  - Cure
  - Dry Film Thickness
  - Coverage
  - Surface Contaminates
  - Cleanliness

The First and Finish Coats will be inspected for surface repairs or touch up prior to the Final Acceptance of the Finish Coat. The dry film thickness will be taken by the QC Inspector. Dry film thickness of 24 to 30 mils will be obtained for the Finish Coat.

Visual Inspection
A complete visual inspection will be conducted to the applied Finish Coat to determine that specified quality requirements are maintained by the QC Inspector.

Dry Film Thickness Measurements
Dry film thickness measurements of the Intermediate Coat will be documented in accordance with SSPC PA-2, utilizing a Type II fixed probe gauge. Three measurements will be collected per spot and averaged; and the five spot measurements will to be averaged. Each spot measurement will be within 80 percent of the minimum dry film thickness and 120 percent of the maximum dry film thickness and the average of the five spot measurements of the total system applied. Testing will be conducted within three (3) 100 square foot locations for the first 1,000 square feet and one (1) 100 square foot location for each additional 1,000 square feet thereafter. Dry Film Thickness measurements will be conducted and gauge calibrated in accordance with SSPC PA-2.

If additional coats are required after the initial application of the finish coat for the PCS 1100 in the UST's the steps laid out in Section 13.0 will be followed again. This will be the process until Final Acceptance is approved.

UST's - Interior Coating System

Coat	Min DFT (mils)	Max DFT (mils)
First Full Coat	12	15
Finish Coat	12	15
Total System =	24	30

14.0 FINAL INSPECTION, HOLIDAY TESTING AND PROTECTION OF COATING SYSTEM:

- ✓ I INSPECTION REQUIRED
  - Visual Inspection
  - Environmental Conditions
  - Dry Film Thickness
  - Final Cure
  - Holiday Testing & Touch up

Final Inspection

A Final Inspection will be conducted by the QC Inspector, ASI Superintendent and Project Manager after 48 hours of cure time. A complete visual inspection will be conducted on the applied Coating System to detect defects in the form of cracking, holidays, voids, blisters, pinholes and other detrimental conditions by the QC Inspector. Final cure of the applied topcoat shall be a minimum of fourteen (14) days prior to immersion service. The QC Inspector and ASI Superintendent will perform a Low Voltage Holiday Detection Test on the interior tank coating system. The testing will not be conducted any sooner than 72 hours after the topcoat has been applied. A Tinker Razor Low Voltage Wet Sponge method of NACE SPO188 will be utilized, and properly grounded to the substrate. Holidays, discontinuities will be marked for repair. Defects in the form of low milage, holidays, pinholes, blisters, nicks and dings that have caused discontinuities in the coating system will be marked by the QC Inspector and ASI Superintendent. The QC Inspector and ASI Superintendent will review any deficiencies, revealed during these inspections. Touchup and repairs will be made to small areas that do not expose the steel substrate by brush or daubers depending on the access and location of the repair. Areas found to have exposed steel substrate larger than a dime will be cleaned using a vacuum blast head, pencil blaster so as to not cause additional damage to the surrounding surfaces. If the spot is small (dime size) then the area will be feathered back with #80-#120 emery cloth 2 inches back prior to application of the complete system. Inspection controls will be utilized to ensure that repairs are completed in a neat and uniform fashion to the surrounding surfaces. The brushing shall be done so that a smooth coat of coating material is applied as uniformly as possible is obtain the required coating thickness. The repairs will be completed in accordance with SSPC-PA-1. The on site QC Inspector and ASI Superintendent will continuously monitor the repairs for

compliance. Upon completion of repair work a follow-up Final Inspection will be conducted as stated herein.

Protection of Coating System
ASI Quality Control will ensure that inspection personnel, workers will be provided with clean canvas or other approved shoe covers when walking on coated surfaces, regardless of curing time allowed. For heavily trafficked areas, provide cushioned walking mats for additional protection. In addition to using protective measures for occupancy after the coating application ASI will maintain a clean access way that will minimize the possibility of tracking in dirt and debris.

15.0 COMPLETION INSPECTIONS

Punch-Out Inspection
Near the completion of work or increment thereof, ASI Superintendent shall notify the Project Manager that a punch list inspection is ready to complete.

Pre-Final Inspection
The Project Manager shall ensure that any items noted on the punch list are corrected prior to the Government inspection or Contracting Officers Representative.

Final Acceptance Inspection
The Project Manager, QC Inspector, ASI Superintendent, and the Contracting Officers Representative will complete this inspection. Upon completion of the Coating System, a Final Inspection will be conducted. The Final Inspection will consist of a complete visual inspection of the Coating System and property for project Close-Out.

Close-Out Documents Submittal
Daily inspection records will be submitted to the Project Manager on a daily basis. Upon final completion of the project, a submittal will be transmitted containing all inspection reports, test, inspections, measurements, non-conformance actions, corrective reports, and other pertinent information.

Final Cleanup
Following completion of the coating process work, remove debris, equipment, and materials from the site. Remove temporary connections to Government or Contractor furnished water and electrical services. Leave work areas in a broom clean condition.

REFERENCED DOCUMENTS

The following documents will be accessible for review by the Project Manager, QC Inspector and ASI Superintendent

1. Prime Contract

2. SSPC- QP -1 Library

3. UFGS Section 09 97 13.15, 2011 LOW VOC POLYSULFIDE INTERIOR COATING OF WELDED STEEL PETROLEUM FUEL TANKS

4. UFGS Section 09 97 13.27, Exterior Coating of Steel Structures- 01/07

5. UFGS Section 33 52 80, Liquid Fuels Pipeline Coating Systems- 10/07

APPENDIX J

PROJECT DATA –
ASBESTOS ABATEMENT WORK & SAFETY PLANS

Distribution is limited to US Government agencies and their contractors; administrative/operational use within the context of this project. Other request shall be referred to the Naval Facilities Engineering Service Center.

Intentionally Left Blank

(Remove page & insert data)

Distribution is limited to US Government agencies and their contractors; administrative/operational use within the context of this project. Other request shall be referred to the Naval Facilities Engineering Service Center.

APPENDIX K

PROJECT DATA –
JP5 PIPELINE REPAIR WORK PLANS

Distribution is limited to US Government agencies and their contractors; administrative/operational use within the context of this project. Other request shall be referred to the Naval Facilities Engineering Service Center.

Intentionally Left Blank

(Remove page & insert data)

Distribution is limited to US Government agencies and their contractors; administrative/operational use within the context of this project. Other request shall be referred to the Naval Facilities Engineering Service Center.

APPENDIX L

PROJECT DATA –
TK5 WARRANTY REPAIR PLANS

Distribution is limited to US Government agencies and their contractors; administrative/operational use within the context of this project. Other request shall be referred to the Naval Facilities Engineering Service Center.

SOW / RFTOP TO 003 – CLEAN, INSPECT AND REPAIR TANKS 5 & 17
Appendix L - Red Hill Complex TK 5 Warranty Repair Plans

L.1 INTRODUCTION AND SUMMARY OF WORK

Willbros will perform the following Warranty repairs as required to ensure all of the requirements and specifications are completed per TO 003 and CRM 09 for the specified approved tank repairs to TK5. Deficiencies were found in the initial repairs during the A&E inspection process of TK5 located at the Red Hill Complex, Pearl Harbor, HI.

Willbros was notified by NAVFAC of some potential problems or defective workmanship to the repairs performed by Willbros under the contract modification. Willbros and a NAVFAC representative engaged in performing an investigative process to determine if there were any relevant workmanship issues. During the investigation some weld repair issues were identified on several locations. These areas were vacuum box tested during the investigative process and some of the locations failed the test.

Willbros plans to retest (LT & MT) all tank patch plate and weld repairs to ensure that all weld and patch plate repairs are mechanically sound. After all testing is completed; all repaired areas will be visually inspected to ensure the welds are in compliance with the code requirements. Once all testing and inspection is completed, a composite repair list will be provided to NAVFAC prior to starting any repairs.

Willbros will perform any repairs required for the repair originally listed or covered under the original SOW listed in the contract mod for the TK5 repairs. Willbros will perform the repairs using the Willbros TK5 Repair Procedure and drawings per the original mod for the NAVFAC tank repair SOW as defined in the WGS RFI documents developed from our understanding of the desired project scope of work. Based on this understanding of the project, we have developed a technical approach to accomplish the project objectives as described below. WGS will incorporate this into the comprehensive construction completion report to summarize all activities performed during the project warranty task.

The project repair SOW includes verifying that all Lock Out Tag Out isolation (LOTO) and ventilation on the tank and connecting piping systems are in place as required to make the necessary repairs, internal support activities, repair activities and non-destructive testing of the repairs at the specified locations per the API 653 code requirements.

After all mechanical and any coating repairs have been completed, re-inspected and found acceptable per the code requirements; Willbros will provide all repair and test data to NAVFAC for review and approval. Once all reviews and approvals are completed and obtained, the systems will be returned to operational readiness. All temporary blinds, isolations and configurations devices will be removed and restored for operations.

L.2 –PROJECT SCHEDULE AND CONTROLS

L.2.1 PROJECT SCHEDULE

The project schedule was initially provided in Appendix B, an updated schedule will be provided separately for the duration of the warranty repairs. The schedule illustrates the projected timelines for the project tasks from the project preparation through project closeout. As additional task(s), repairs, coatings or other activities are added or identified; the project schedule will be changed to reflect the additional time required for the added task or activities.

L.7.2 CRITICAL PATH

Willbros has identified the following as a potential relevant schedule risk item which has significant probability of adversely affecting the project work schedule, other than review and approvals. The Willbros project management and controls team will monitor and update the schedule regularly; to evaluate and anticipate any realistic potential problems and to have plans in place to maintain our work schedule. The Critical Path will be integrated and shown on the overall project schedule.

- Personnel Badging & Access

L.3 PROJECT SPECIFICATIONS

We have carefully reviewed the Warranty Repair SOW and understand the requirements for the development of the Warranty Repair Plan to ensure compliance with all regulatory guidance specified including the following codes and specifications: (These are in reference to those listed in Appendix A, edition as applicable to contract year)

American Petroleum Institute (API)
- API Standard 650, Welded Steel Tanks for Oil Storage
- API Standard 653, Tank Inspection, Repair, Alteration and Reconstruction

American Society of Mechanical Engineers (ASME)
- ASME V, *Nondestructive Examination*
- ASME IX, *Welding and Brazing Qualifications*

Code of Federal Regulations (CFR)
- 29 CFR 1910, *Permit-Required Confined Spaces for General Industry*.

National Fire Protection Association (NFPA)
- NFPA-30, *Flammable and Combustible Liquids Code*.

Safety
- EM 385-1-1, *U.S. Army Corps of Engineers Safety and Health Requirement, Appendix A Minimum Basic Outline for Accident Prevention, and paragraph 6*.

Unified Facilities Guide Specification (UFGS)
- UFGS-09 97 13.15 (09973), *Interior Coating of Steel Structures*
- UFGS-33 65 00 (13219) *Cleaning Petroleum Storage Tanks*

The project execution work plan has been developed to provide complete turnkey services for the task order. It identifies personnel, materials and equipment requirements, QA/QC, safety and environmental approaches and considerations which help develop our overall schedule to ensure timely completion of the task order. It also details our plan for managing and coordinating all support or construction personnel, subcontractors and project activities.

Our Project Management Team has developed a contingency plan to handle any schedule or subcontractor conflicts, shortages or concerns from the initial contract execution or performance until the completion of the project. Our Project Management Team identifies the utilization of local resources and subcontractors with similar relevant project experience which will provide a more effective and timely approach for the successful completion of the project.

L.4 SCOPE OF WORK: TK5 WARRANTY REPAIR

Willbros will furnish all labor, materials, tools, and equipment required to repair the areas identified during the additional testing and visual inspection of the TK5 repair locations. The project will include the required testing, NDE, mechanical and coating repairs for the SOW listed and defined below.

Willbros has combined the project requirements and our project management to plan the scope of work in the most efficient manner. Below is a chronological sequence of tasks to be performed to ensure timely, accurate completion of the task order requirements:

- NAVFAC EXWC reviews and approves repair plan. (NAVFAC)
- Issue final work plan and drawings. (WGS Project Team)
- Mobilize testing and inspection team. (WGS Project Team & subcontractors)
- Perform vacuum box testing & visual inspection on all repair locations (WGS Project Team & subcontractors)
- Provide testing & inspection data, along with a list of all repair locations (WGS Project Team)
- NAVFAC EXWC reviews and approves repairs. Issues NTP. (NAVFAC)
- Mobilize Support and Repair Team (WGS Project Team & subcontractors)
- Perform SOW Site Orientation with Site Manager, subcontractors and NAVFAC Field Representative at the site as necessary. (WGS Site Manager & subcontractors)
- Perform vacuum box testing & NDE on repair locations (WGS Site & subcontractors)
- Provide final NDE and testing documents for NAVFAC (WGS Project Team)
- Inspect coating for any relevant damage & make repairs as needed (WGS Site & subcontractors)
- Coating inspection of any repaired areas as needed (WGS Site & subcontractors)
- NAVFAC EXWC reviews and approves final repairs. (NAVFAC)
- Remove tools, equipment from tank interior (WGS Site & subcontractors)
- Clean up tank interior and site, final site walk with client (WGS Site & NAVFAC)
- Demob from Tank 5

After all mechanical and coatings have been completed, re-inspected and found acceptable per the code requirements; Willbros will provide all repair and test data to NAVFAC for review and approval. Once all reviews and approvals are completed and obtained, the systems will be returned to operational readiness. All temporary blinds, isolations and configuration devices will be removed and restored for operations.

APPENDIX M

PROJECT DATA –
POTENTIAL FREE PRODUCT RECLAMATION PLAN

Distribution is limited to US Government agencies and their contractors; administrative/operational use within the context of this project. Other request shall be referred to the Naval Facilities Engineering Service Center.

RED HILL COMPLEX PROJECT
TANK 5 WARRANTY WORK
IDENTIFICATION / REMOVAL OF POTENTIAL FREE PRODUCT

1.0 IDENTIFICATION / REMOVAL OF POTENTIAL FREE PRODUCT SUMMARY

Willbros Government Services has prepared this procedure under Contract No. N62583-09-D-0132 / TO 003 for warranty work on Tank 5 located at Red Hill Pearl Harbor, HI. This procedure will be utilized to identify potential free product and provide guidance for the removal, storage, and disposal of any potential reclaimed free product thought to have been lost during Tank 5 filling activities.

Note – For any additional information not listed in this document see the WGS WP, specifically the Repair Procedure.

2.1 POTENTIAL FREE PRODUCT- INDENTIFICATION SUMMARY

Due to the underground construction of Tank 5, some of the exterior surfaces are inaccessible for gas free testing and permitting. Areas of the tank's internal steel liner appear to have separated from the concrete encasement surrounding the tank. This condition can allow water, fuel, liquid or vapor, to be trapped in a localized area between the two surfaces. WGS intends to identify potential trapped free product in these areas via Vacuum Box Testing (VBT). This will be conducted to verify the integrity of the repair plate seal welds made to the tanks interior surface, as well as, identifying the existence of free product trapped in that location. All previous repairs performed by WGS will be VBT'd during this process including the 17 failed locations previously identified in the initial inspection. Any area suspected of holding trapped free product, that does not have a repair location suitable for VBT, will be addressed using an alternate method requiring WGS to drill a new inspection port to conduct the test.

The tank is divided into 4 quadrants (A, B, C, D) which identify the tank left to right. The tank is also divided from bottom to top by Lower Dome, Shell or Barrel, Extension Rings, and Upper Dome. WGS intends to drill and/or expose a minimum of 12 inspection ports in the tank liner; 1 port per quadrant for the Extension Rings, Shell or Barrel, and Lower Dome. Due to initial tank filling procedures and gravity WGS does not expect free product to be located in the Upper Dome. Coating will be removed and replaced as-needed on the lower dome.

2.2 FREE PRODUCT IDENTIFICATION PROCEDURE

<u>Free Product Identification – Steps & Sequence</u>

2.2.1 Vacuum Box Testing- During VBT the presence of product being pulled from behind the repair plate or the odor of product after the Vacuum Box is removed from the test area will be recorded in the QC log by the NDE technicians performing the test.

2.2.2 Inspection Port Determination- WGS QC Manager will review the NDE data collected to determine locations for the minimum 12 additional inspection ports, distributed in the tank as described in Section 2.1, based on the NDE data and tank conditions. If the QC manager is unable to satisfy the criteria using existing repairs, he will determine locations for new inspection ports, using the alternate method described in Section 2.1, based on the NDE data and tank conditions e.g., liner separation, leak path, presence of product or odor etc.

2.2.3 Tracking Inspection Ports- WGS will use the QC Log to track the location of each plate removed and/or port drilled for the purpose of identifying potential free product.

2.3 FREE PRODUCT RECLAMATION PROCEDURE

Product Reclamation – Steps & Sequence

2.3.1 Repair Plate Location – If liquid is detected behind a repair plate, a port will be drilled in close proximity to drain any product found at the location.
(See 2.2.3.2 for draining procedure)

2.3.2 Alternate Method: New Inspection Port Location – New locations will be determined by the QC Manager based on Section 2.1, Section 2.2.2 and the NDE data and conditions found in the tank. A port, 1/4" in diameter, will be created in the designated location with a pneumatic drill.

2.3.3 Product Reclamation-

2.2.3.1- **If no liquid is present-** WGS will test the area through the port with a gas monitor and record the readings on the QC log to be reviewed by the QC Manager to determine if further action is required.

2.2.3.2- **Liquid present-** Inspection port will be drilled and tapped to install a threaded valve to allow WGS to perform controlled draining of liquids. During tapping and threading of inspection port WGS will place oil absorbent rags below inspection port to catch any seeping liquid. A 15 gallon DOT drum will be located inside of the man basket and will be the temporary storage container until personnel return to the catwalk and material can be relocated into a larger drum or container. Once gravity flow through the valve has stopped, WGS will attempt to extract any additional accessible liquid with a small vacuum pump (5-10 Hg psig). Liquids will be collected in containers or drums to be evacuated from the tank thru the access tunnel.

2.2.3.3- WGS will track and record the amount collected and disposed of in the QC log. Testing will be performed on any collected liquids to characterize and determine proper disposal procedures, e.g., fuel reclamation or waste. Disposal location and test results will be noted in the QC log. Photos and visual characterizations will be documented in the QC daily reports.

Note –This process will begin at the top of the tank and proceed downward to limit or control the amount of liquids drained from any location where they are encountered. Based on the construction methods and historical data relating to the tank WGS does not expect to find large quantities of product in any single location of the tank. During the process described above, if WGS encounters a quantity of product that is not feasible to drain in the described method, the test/drain port will be plugged and another procedure will be developed based on the location and condition of the area where the product is found.

2.4 Product Inspection Port Repairs

Product inspection port repairs will conform to WGS Work Plan Tank 5 Repair Procedure rev 1D and the following. An area will be marked or laid out a minimum of 1" beyond the inspection port peripheral edge. The entire surface of the marked area will be cleaned to remove all existing coating or debris from the weld area. A groove will be ground into the port in accordance with the WPS joint limits, and then filled with weld, back to base metal thickness. After cleaning the filled groove, a weld overlay will be performed on the repair location. All weld overlays should extend a minimum of 1" horizontally and 1/2" vertically on either side of the affected area designated for overlay.

2.5 Summary

Willbros will perform the above procedures to identify, reclaim, or dispose of any potential free product thought to have been lost during Tank 5 filling activities. Areas identified as inspection ports during the performance of this procedure will be tracked in the QC log, which will be submitted to EXWC with the Inspection Report prior to beginning any tank repairs.

REVISIONS			
LTR	DESCRIPTION	DATE	APPV'D
	'93 BUILT CONDITION SHOWN T.V.	1/21/93	[illegible]

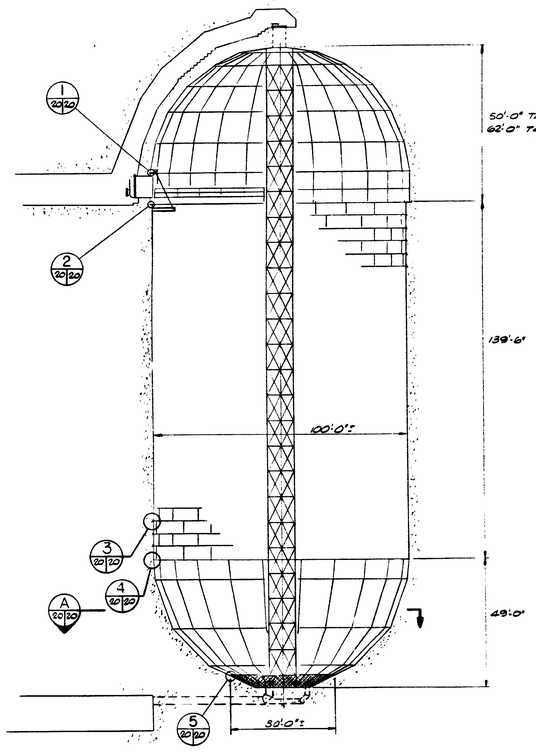

TANK ELEVATION
1"=20'

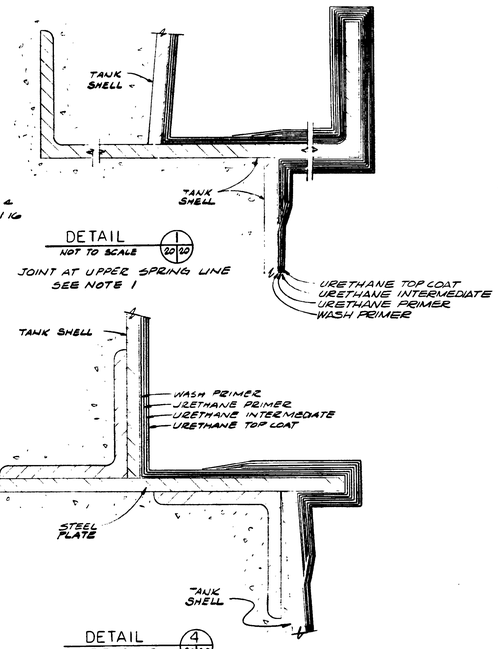

DETAIL 1 20/20
NOT TO SCALE
JOINT AT UPPER SPRING LINE
SEE NOTE 1

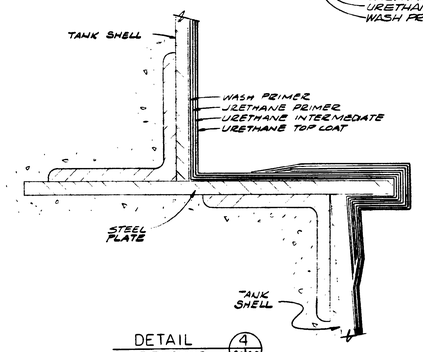

DETAIL 4 20/20
NOT TO SCALE
LOWER JOINT AT SPRING LINE
SEE NOTE 1

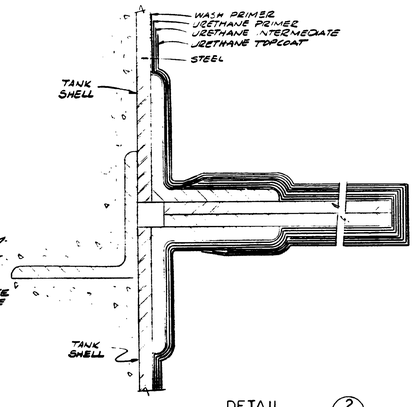

DETAIL 2 20/20
NOT TO SCALE
JOINT AT EXPANSION PLATE
SEE NOTE

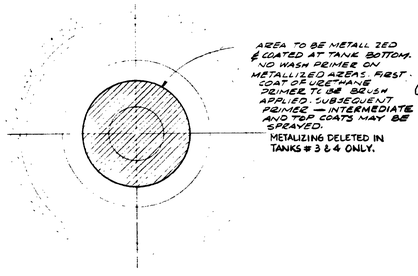

SECTION A 20/20
1"=20'

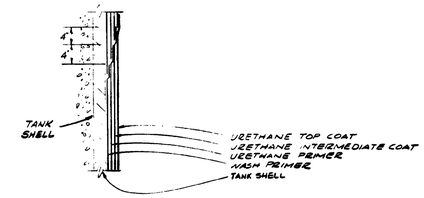

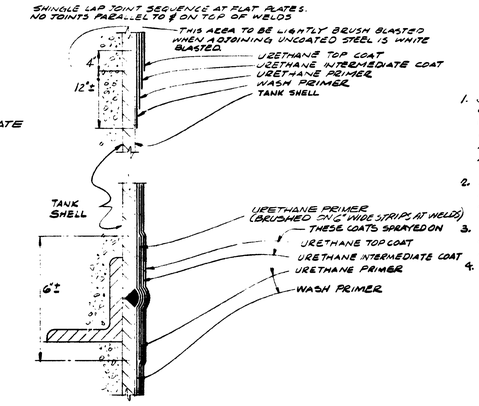

DETAIL 3 20/20
NOT TO SCALE
TANK COAT DETAILS

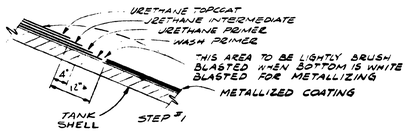

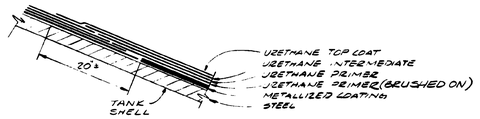

STEP #2

NO WASH PRIMER ON METALLIZED AREAS. FIRST COAT OF URETHANE PRIMER TO BE BRUSH APPLIED. SECOND COAT OF PRIMER & SUBSEQUENT COATS MAY BE SPRAYED.

DETAIL 5 20/20
NOT TO SCALE

CONSTRUCTION NOTES

1. JOINT DETAILS SHOWN ARE TYPICAL. LOCATION OF THE JOINTS WILL VARY DEPENDING ON THE CONTRACTOR'S WORK PLAN. IF JOINTS ARE REQUIRED NEAR THE SPRING LINES OR EXPANSION JOINT, THEY SHOULD BE MADE AS SHOWN ON DETAILS 1, 2 OR 4. HOWEVER, JOINTS ARE NOT NECESSARILY REQUIRED AT THESE POINTS.
2. ALL SHARP CORNERS ON THE TANK SHELL SHALL BE GROUND TO A MINIMUM 1/8" RADIUS BEFORE ANY COATING IS APPLIED, EXCEPT AS SHOWN OTHERWISE.
3. ALL ROUGH WELDS ON TANK SHELL SHALL BE GROUND TO A SMOOTH CONTOUR BEFORE COATING IS APPLIED.
4. TANK #10 LOWER DOME HOLIDAYS REPAIRED WITH WHITE EPOXY.

BID ITEMS NO. 1, 2, AND 3

The Contractor will be responsible for coordinating the work among the various trades as necessary to avoid conflicts and to insure the installation of all work within the available space.

RECORD DRAWING
DATE 2/27/95

IF SHEET IS LESS THAN 28" x 40" IT IS A REDUCED PRINT – SCALE REDUCED ACCORDINGLY

HALLANGER ENGINEERS INC.
ORINDA CALIFORNIA

DEPARTMENT OF THE NAVY NAVAL FACILITIES ENGINEERING COMMAND
PACIFIC DIVISION
MAKALAPA, HAWAII

NAVAL SUPPLY CENTER PEARL HARBOR, OAHU, HAWAII

MODERNIZATION OF RED HILL POL FACILITY (F-060)
TANK COATING
SECTIONS & DETAILS

M-10

SATISFACTORY TO DATE
TITLE

SIZE	CODE IDENT NO.	NAVFAC DRAWING NO
F	80091	7019545
SCALE AS NOTED	CONSTR CONTR NO N62471-77-C-1316	SPEC 14-77-1316 SHEET 20 OF 30

7019545