US EPA ARCHIVE DOCUMENT

# Romic Environmental Technologies Corp.

**AZD 009015389**

Chandler, Arizona

TSD Facility

Section F

# Procedures to Prevent Hazards

**January 2005**

# CONTENT


Section Page

**F PROCEDURES TO PREVENT HAZARDS ..... F-1**

**F1 SECURITY MEASURES ..... F-1**
**F1.1 BARRIER AND MEANS TO CONTROL ENTRY ..... F-1**
**F1.2 WARNING SIGNS ..... F-1**
**F2 INSPECTION PLAN ..... F-2**
**F2.1 INSPECTION REQUIREMENTS ..... F-2**
**F2.2 INSPECTION LOG ..... F-3**
**F2.3 REMEDIAL ACTION ..... F-3**
**F2.4 TANK CONDITION ASSESSMENT ..... F-4**
**F2.4.1** TANK ENTRY PROCEDURES ..... **F-5**
**F3 PREPAREDNESS AND PREVENTION MEASURES ..... F-6**
**F3.1 EQUIPMENT REQUIREMENTS ..... F-6**
**F3.1.1** INTERNAL AND EXTERNAL COMMUNICATIONS ..... **F-6**
**F3.1.2** EMERGENCY EQUIPMENT ..... **F-6**
**F3.1.3** WATER AND FIRE CONTROL ..... **F-7**
**F3.2 AISLE SPACE REQUIREMENTS ..... F-7**
**F3.3 ARRANGEMENTS WITH LOCAL AUTHORITIES ..... F-8**
**F4 PREVENTION PROCEDURES, STRUCTURES AND EQUIPMENT ..... F-9**
**F4.1 UNLOADING/LOADING OPERATIONS ..... F-9**
**F4.2 RUN-OFF PREVENTION ..... F-9**
**F4.3 GROUND AND SURFACE WATER PROTECTION ..... F-9**
**F4.4 EQUIPMENT AND POWER FAILURE ..... F-10**
**F4.5 PERSONAL PROTECTIVE EQUIPMENT ..... F-10**
**F4.6 PROCEDURE TO MINIMIZE RELEASES INTO THE ATMOSPHERE ..... F-11**
**F5 PREVENTION OF REACTION OF IGNITABLE, REACTIVE, AND INCOMPATIBLE WASTES ..... F-11**
**F5.1 PRECAUTIONS TO PREVENT IGNITION OR REACTION OF IGNITABLE OR REACTIVE WASTES ..... F-11**
**F5.2 GENERAL PRECAUTIONS FOR HANDLING IGNITABLE OR REACTIVE WASTE AND MIXING OF INCOMPATIBLE WASTE ..... F-13**


Tables, Figures, and Appendices are presented
in separate sections following the main body of the text.

**Tables**


Table F-1 Inspection Schedule


**Figures**


Figure F-1 Controlled Access Points


**Appendices**


Appendix F-1 Example Inspection Forms
Appendix F-2 Example Maintenance Request Form
Appendix F-3 Memorandum of Agreement
Appendix F-4 Examples of Completed Inspection Forms
Appendix F-5 VOC Monitoring Protocol

# F PROCEDURES TO PREVENT HAZARDS

## F1 SECURITY MEASURES

Facility security procedures and equipment are in place to prevent unknowing access by persons and to minimize the possibility of unauthorized entry. Administrative activity areas not directly involved with the transfer, storage or treatment of hazardous waste are not located within hazardous waste management areas. Authorized visitors must sign in and be escorted, or under observation, by plant personnel while in the facility's hazardous waste management areas. Contractors that have completed Romic's contractor training may work unescorted.

### F1.1 BARRIER AND MEANS TO CONTROL ENTRY

The west side of the facility is completely surrounded by an eight-foot-high chain link fence with redwood slats. The fence is topped with three-strand barbed wire. The east side of the facility is surrounded on 3 sides by a barbed wire topped chain link fence, and a block wall topped with barbed wire along Allison Road. Exits and entrances along Allison Road are located to control traffic flow, limit access to the active area (i.e., waste and product handling area) on the west side of the facility, and provide emergency escape. The waste and product handling area, located on the west half of the facility, has electronically operated entrance and exit gates that normally remain closed. There are three additional chained and locked gates in the west side perimeter fence. The east side gates remain open during normal business hours. Figure F-1 show the secured access and gate locations. The plant is illuminated at night by automatic outdoor lighting as an additional security measure.

Access to the west side (active area) of the facility is restricted to waste transportation vehicles, authorized personnel, and escorted visitors. The main entrance/exit gates to the west side of the facility are at Allison Road. These gates are normally closed, and are opened electronically by remote control. Key employees are assigned garage door opener-type transmitters that activate the gates. Lab personnel can observe vehicles in front of the entrance gate via mirror, and open the gate from within the receiving office. The pedestrian gate at the west side main entrance is open during normal operating hours, and padlocked closed when the facility is closed.

### F1.2 WARNING SIGNS

Signs printed with the legend, "Danger – Do Not Enter – Unauthorized Personnel Keep Out" are posted on the gates and along the perimeter fence. English is the predominant language in the area, and therefore warning signs are posted in this language. There are also several signs indicating the same message in Spanish. The signs are visible from any approach to the facility and are legible from a distance of 25 feet. They are attached to the fence and gates at a height of approximately five feet.

## F2 INSPECTION PLAN

The inspection plan is intended to protect human health and the environment by detecting, preventing, and responding to malfunctions, deterioration, operator errors, and unplanned discharges. The inspection schedule, attached as Table F-1, is based on operating experience and engineering knowledge.

### F2.1 INSPECTION REQUIREMENTS

In general, facility inspections are conducted to prevent, detect, or respond to environmental or human health hazards. Inspections address the following items: safety and emergency equipment, security equipment, operational and process equipment, container and tank storage areas, loading/unloading areas, and tank systems.

The inspection schedules in Table F-1 indicate the types of items inspected, the types of problems looked for during inspections, and the frequency of the inspections. The frequency of inspection is based on the rate of possible deterioration of equipment and structures, and the probability of an environmental or human health incident if an unsatisfactory condition (e.g., deterioration, malfunction, or operator error) goes undetected between inspections. The following paragraphs generally describe the inspection schedule.

Safety and emergency equipment is checked weekly, monthly, semiannually, annually, and/or biannually as scheduled, and as used. Equipment is also checked for access and operability in the event of an emergency.

Security equipment is inspected monthly to prevent unauthorized access to the facility, ensure warning signs remain posted, and ensure the facility is properly lighted.

Operational equipment is inspected before use to ensure safe operation. Regularly scheduled servicing via the onsite preventive maintenance program, or service contractors, is performed to maintain the equipment in good operational condition.

Sumps and secondary containment structures provided for all tank systems, loading/unloading areas, and treatment systems are visually inspected daily to detect leaks, spills, or accumulated liquids. Accumulated liquids typically are removed by the end of the 8-hour shift in which they were detected. If it is not possible to remove accumulated liquids during the same shift, the liquid will be removed within 24 hours of discovery. Removal of precipitation will be completed within 24 hours after the end of a rainstorm. All secondary containment systems are inspected weekly to detect the presence of cracks or deterioration of concrete and the accumulation of dirt or other materials that may prevent the inspection of concrete.

Hazardous waste container storage and processing areas are inspected weekly for leaks, spills, proper stacking arrangements, aisle spacing, and the segregation of incompatible materials. Also, containers are inspected for any signs of physical deterioration or corrosion, and labels are checked to ensure they are visible and legible.

Hazardous waste tank storage and processing systems, including tanks, process equipment, loading/unloading areas, secondary containment structures, and ancillary equipment, are inspected daily for signs of corrosion, weld breaks, punctures, spills, and secondary containment erosion or deterioration. Procedures to assess the structural integrity of tanks over time (e.g., corrosion, cracking, wall thinning) are addressed in Section F2.4, Tank Condition Assessment.

In cases where specialized outside contractors are needed to perform specific inspections (e.g., sprinkler or alarm systems, tank thickness), the results will be reported on the contractor's inspection forms, checked off on the Romic inspection form, and copies retained in the operating record for a minimum of three years.

## F2.2 INSPECTION LOG

Inspection forms are used to document information gathered during inspections of facility equipment and operational areas. Example inspection forms are provided in Appendix F-1. The forms are designed to ensure that all items are inspected as required by the inspection schedules in Table F-1. Each form has been developed to assess a certain aspect or area of the facility such as: safety and emergency equipment, security equipment, operational equipment, container storage areas, tank systems, and waste treatment units. The forms note the date and time of inspection and the printed name and signature of the inspector. The forms also contain a detailed list of specific equipment and areas to inspect, specific items to note during the inspection, and a space for the inspector to note whether or not the observation points are in satisfactory condition. There is also space for the inspector to note any comments and/or a maintenance work request number generated. The inspection forms are modified as necessary to accommodate operational or equipment changes at the facility.

## F2.3 REMEDIAL ACTION

If an inspection item is found to be in an unsatisfactory condition, the following remedial action procedures are initiated.

If the inspector notes an item that requires an immediate response (e.g., leaking container or tank), the situation will first be brought under control in accordance with procedures described in Section G, Contingency Plan. After the situation has been controlled, the incident and the corrective action will be noted on the inspection form. A maintenance request form may also be completed if necessary.

If an immediate response is not required, the inspector notes and describes any unsatisfactory conditions in the comment column of the inspection form. Upon completion, the inspection forms are reviewed by the appropriate department management or designee. Unsatisfactory conditions that do not require repair or maintenance of equipment (e.g., torn labels, fire extinguisher out of place) will be corrected within 24 hours from when they were detected. For unsatisfactory conditions that require repair or maintenance of equipment (e.g., crack in secondary containment, damage to security fence), a priority level is determined and a numbered maintenance request form is issued which outlines the appropriate repair/remedial action. The maintenance request number is noted on the inspection form.

An emergency response level (Priority E) indicates the repair/remedial action is to be initiated immediately and closely monitored until completion. An urgent response level (Priority U) indicates the repair/remedial action is to be initiated within one day and closely monitored until completion. A routine response level (Priority R) for repair/remedial action is typically expected to be completed within six days, however physical or operational constraints (e.g., availability of replacement parts or equipment) may require longer routine repair/remediation times. A long-term response level (Priority B) is for projects that do not present an immediate threat to human health or the environment and the repair is not critical to routine operations. These projects are generally expected to be completed within 1 month.

The maintenance request forms specify corrective actions/repairs and note any supplies or equipment used to ensure replacements are ordered. An example of a maintenance work request form is provided in Appendix F-2.

Copies of the inspection forms and maintenance work request forms are kept in the facility operating record for a minimum of three years.

## F2.4 TANK CONDITION ASSESSMENT

Tanks used to store or treat hazardous waste are periodically assessed to ensure that they retain their structural integrity and will not collapse, rupture, or fail. The frequency of tank integrity assessments is based on several factors, including:

- The age of the tank system,
- Materials of construction,
- Type of corrosion or erosion protection used (where applicable),
- Historical and/or estimated data on corrosion rates,
- The nature of the material stored/treated, and
- The threat to public health posed by a release of the contents due to failure.

The assessment schedule and procedures are adequate to detect cracks, leaks, corrosion or erosion.

Existing regulated tanks undergo integrity assessments on a biennial basis (once every two years). The scheduled tank integrity assessments are conducted by certified assessors who follow tank inspection guidelines specified in American Petroleum Institute (API) 653. These assessments consist of ultrasonic shell thickness measurements and an extensive visual examination. All tank assessments are reviewed and certified by a NDE Level III examiner. Records of all tank assessments are maintained in the facility operating record for a minimum of three years.

Newly installed or upgraded tanks will be certified as fit for their intended use by an independent, qualified, professional engineer prior to being placed into service. Tanks and tank systems undergoing

major repairs will also be certified by a professional engineer. Romic will submit a copy of each such tank system certification to the Environmental Protection Agency.

### F2.4.1 TANK ENTRY PROCEDURES

When a tank is inspected or repaired from the inside, the tank must be emptied and a confined space entry procedure followed in accordance with Article 120 and 146 of 29 CFR 1910. These procedures are outlined below.

Prior to entry all free liquids and sludges are pumped from the tank to another compatible tank. The tank is isolated by employing proper Lockout/Tagout procedures to include (but not limited to): locking, blanking or removing all directly connected fill, suction, purge treating or other lines and piping to and from the tank. Once the tank has been isolated it is cleaned and purged of all residues and air-ventilated.

Following this step, the atmosphere inside the tank is tested for oxygen deficiency, combustibility and toxicity to check for safe entry conditions. Under current practices tank entry does not proceed unless the oxygen content is ≥ 19.5% and < 23.5%, and the atmosphere within the tank is less than 10% of the Lower Explosive Limit (LEL). A multi-gas detector is also used to screen or check for toxic conditions in the tank. Toxic conditions are deemed to exist if the airborne concentration of contaminants is above the OSHA-established Permissible Exposure Limit, the ACGIH-established Threshold Limit Value, or other industry or agency established limit. If toxic conditions exist, entry is only conducted with the approval of the Romic Environmental Health & Safety Manager, or a trained and certified confined space entry supervisor.

A continuous flow of fresh air is pumped through the tank (bottom to top or top to bottom) at all times, and the air is continuously monitored for oxygen deficiency, CO, $H_2S$ and combustibility. Personnel will exit the tank if 10% of the LEL is reached. If required, additional toxicity checks will be performed.

All employees engaged in a confined space entry shall adhere to confined space entry procedures and are required to wear the appropriate protective equipment. Supplied air respirators may be utilized if the conditions within the tank require the use of an external breathing air source. During confined space entry, entrants wear a safety harness with lifeline, while rescue personnel wear a harness and have all applicable rescue equipment standing by. During tank repair, all gas cylinders or welding machines are left outside of the tank. Torches, hoses, cables and electrodes may be taken inside the tank. Electrical equipment and tools shall be selected in accordance with the hazard of the situation.

Additional equipment at the job site may include fire extinguishers, extra rope, harnesses and supplied air respiratory protective equipment.

## F3 PREPAREDNESS AND PREVENTION MEASURES

## F3.1 EQUIPMENT REQUIREMENTS

### F3.1.1 INTERNAL AND EXTERNAL COMMUNICATIONS

The plant is equipped with a facility-wide telephone system, which is tested by daily use and maintained as needed by contractors. Each telephone is capable of direct dialing 9-911 to the Gila River Emergency Response Network, which includes Gila River Fire/Paramedic and Police Departments, as well as Gila River EMS ambulances.

Hand-held two-way radios are utilized by facility personnel for communicating during routine waste management activities or emergency situations. The radios are tested by daily use, and are maintained as needed by service contractors.

Emergency alarm air horns are situated throughout the process and storage areas of the facility for use in signaling an emergency situation or need for evacuation. Long blasts of the air horn(s) signal personnel to evacuate the area. Air horns are tested monthly by facility personnel, and replaced annually or after use.

The fire foam/sprinkler system is provided with an audible flow alarm at the maintenance area, and an electronic flow notification alarm monitored continuously by a contracted service which contacts designated facility personnel and the Gila River Fire Department in the event of system flow. The monitoring service is contacted to deactivate and reactivate the alarm prior to weekly flow testing.

Several of the process systems at the facility have alarm panels with audible warning alarms. The alarms sound to alert operator(s) whenever control parameters of the process equipment have deviated from preset operating conditions or reached a desired set point. This can indicate that the system may be approaching an unsafe operating condition if allowed to persist. The alarm panels identify the warning condition of the affected system. Alarms on equipment are set to allow operators sufficient time to make adjustments or shut down processing equipment before operating conditions become upset or dangerous. Alarms are tested and serviced periodically through the Preventive Maintenance program.

### F3.1.2 EMERGENCY EQUIPMENT

Equipment used for response to spills and other incidents is readily available throughout the facility, and inspected regularly for access and operability in the event of an emergency situation. Refer to Table G-2 for a description and location of incident response equipment, Figure G-3 for plot plan locations of the equipment, and Appendix F-1 for inspection forms. Examples of completed inspection forms are provided in Appendix F-4.

Most spill response equipment is in normal operational use at this facility. Spill response equipment including absorbent materials, overpack drums, supplied air and cartridge respirators, protective clothing and numerous hand tools, are stored in various locations throughout the facility and are used routinely.

These are used for regular operational tasks, not just for spills. Mobile equipment in normal use such as portable pumps, forklifts and vacuum tanker trucks are available for use in emergencies as well. These equipment and supplies are restocked as necessary, tested by normal use, and maintained as necessary or through the Preventive Maintenance Program schedules.

Equipment that can be used for decontamination after a spill event is normally in operations use at this facility. Operations equipment used for decontamination can include vacuum tanker trucks which can remove all liquids from a surface or containment area, hoses and pumps configured to provide water or steam for clean up and to remove resulting clean up fluids, power washer(s) which can provide soap or other cleaning solutions as well as water and steam, and safety showers to decontaminate personal protective equipment prior to discarding or cleaning.

Portable multi-use fire extinguishers are placed throughout the facility, in accordance with the Uniform Fire Code (UFC). Fire suppression equipment consisting of AFFF foam and sprinklers are installed in the active covered process and storage areas of the facility. (Fire suppression is discussed further in Section F3.1.3). Containment requirements for fire suppression systems are based upon containment calculations. First aid kits and incident response equipment and supplies are readily available, and inspected weekly. Emergency showers and eye wash stations are installed throughout the facility, and tested monthly by facility personnel.

### F3.1.3 WATER AND FIRE CONTROL

The facility has been equipped with automatic AFFF/water sprinkler fire suppression systems in the active covered treatment and storage areas of the facility. All the drum storage and processing buildings have been equipped with automatic foam sprinkler systems that also have manual override capability. The fire suppression systems are tested and maintained yearly by a service contractor. Tests of the sprinkler system diesel pump are conducted weekly. Containment systems that are subject to firewater discharge meet the containment requirements specified in the UFC.

There are approximately 35 portable fire extinguishers readily available throughout the facility. These are typically 30-lb. Dry Chemical Extinguishers and can be used on Type A, B, and C fires. Two 300-lb. Dry Chemical Extinguishers are located in strategic locations throughout the plant. Additionally there are two PKP/AFFF suppression units located to the east and west of the center tank storage/operations area. There is also a foam cannon that faces the railspur area. All extinguishers are inspected monthly and serviced annually or as needed by a service contractor. See Figure G-3 for types and placement of fire control equipment at the facility.

## F3.2 AISLE SPACE REQUIREMENTS

The facility is inspected for adequate aisle space, allowing unobstructed movement of personnel, fire control/spill response equipment, and access to facility exits and entrances. Containers are stacked with a minimum of 24 inches of aisle space to facilitate movement of emergency equipment. Detailed storage area layouts are included in Section D.

## F3.3 ARRANGEMENTS WITH LOCAL AUTHORITIES

Arrangements have been made with Gila River emergency response agencies as to the type of response and the nature of the hazards they may encounter at the facility. The Gila River Fire Department, which also provides paramedic services, is the primary responding agency to Romic. Gila River emergency response (Fire Department, Police, Paramedics, Ambulance) is available by dialing 9-911 from any plant phone. Appendix F-3 is the Memoranda of Agreement (MOA) with Gila River for emergency services, Chandler Regional Hospital, and the Arizona Department of Public Safety.

In general, the first responding Battalion Chief from the Gila River Fire Department acts as the Incident Commander for an emergency at Romic, the Arizona Department of Public Services for an emergency involving a truck on a state highway, and the local police/sheriff for an emergency on local/county roads. However, in the last case, the local police/sheriff typically will give up the command to a recognized qualified HAZMAT team.

An external emergency response is initiated by calling 9-911 or, in the case of a fire, automatically or manually by various alarms.

### Local Emergency Response Agencies

**Gila River Fire Department**
Doug Jones, District Fire Chief
5002 N. Maricopa road
Chandler, AZ 85226
(520) 796-5900

**Gila River Department of Environmental Quality**
Dan Marsin, Hazardous Waste Program Manager
P.O. Box 97
Sacaton, AZ 85247
(520) 562-2234

**Gila River Police Department**
P.O. Box 97
Sacaton, AZ 85247
(520) 562-3361

**Gila River Tribal Emergency Response Commission**
Beverly Begay, EPCRA Coordinator
P.O. Box 97
Sacaton, AZ 85247
(520) 562-2234

**Chandler Regional Hospital**
475 S. Dobson Road
Chandler, AZ 85224
(480) 963-4561

## F4 PREVENTION PROCEDURES, STRUCTURES AND EQUIPMENT

### F4.1 UNLOADING/LOADING OPERATIONS

Bulk waste materials are transported to and from the facility in tank trucks and roll-off bins, while containerized wastes are typically transported in trailers, flatbeds and vans. Rail car tankers are loaded for waste transport offsite. Facility personnel involved in the unloading/loading of waste are instructed in the proper operational procedures and use of equipment necessary to prevent hazards (see Section H, Personnel Training). Spill containment and clean up materials are located in close proximity to all truck and tank car loading and unloading areas. All waste loading and unloading operations take place on concrete surfaces to facilitate spill clean up.

### F4.2 RUN-OFF PREVENTION

Run-off prevention procedures and procedures for removal of accumulated liquids are described in Sections D1 for container storage areas, and Section D2 for tank and process containment areas. Generally, the active area of the facility is sloped to blind sumps to contain all precipitation falling within the area, preventing run-off. Storm water from all blind sumps in sloped containment areas on-site is collected and removed to a tank. The collected storm water is tested to determine if it can be released, or if it needs to be treated.

### F4.3 GROUND AND SURFACE WATER PROTECTION

Degradation of ground and surface water quality at the facility is prevented through operation of hazardous waste management units within secondary containment to prevent releases to the environment or endangerment of public health. Discussion of secondary containment systems can be found in Sections D1 for container storage areas, and Section D2 for tank and process areas. Romic has procedures in place to mitigate, control, and clean-up releases of waste materials. Refer to Section G for Contingency Plan details.

Potable water is provided to the Romic facility by the Lone Butte Industrial Park service system, which provides fire water service as well as water for potable and industrial use from the Lone Butte water main. There are 5 backflow prevention valves on Romic's water lines which prevent cross contamination of the piping systems. The backflow prevention devices are tested on an annual basis by a contractor. Romic's drinking water is additionally filtered through reverse osmosis water coolers in several locations throughout the site.

## F4.4 EQUIPMENT AND POWER FAILURE

In the event of an electrical power failure, plant personnel are instructed to shut down all electrical operations until normal power is restored. Valves are closed and transfer pumps shut down to eliminate possible spills. There would be no flow of process materials or steam within the distillation units, and no danger of a system overflow or overheating. The facility has a portable diesel powered generator that can supply power for emergency lighting or other uses.

Backup power is not needed for the following safety equipment because they do not have any electrical components: showers and eyewash stations, fire extinguishers, spill containment and clean up supplies. The fire suppression system has its own back up diesel powered pump system, which is inspected and tested weekly. Emergency coordinators are equipped with cellular phones that allow them to contact outside support in the event of a power outage.

In the event of a power failure, liquids can be removed from tanks, containment areas and sumps if necessary by utilizing a vacuum tanker truck. Additional equipment is available from rental companies in near by communities, other Romic divisions, and local emergency response agencies.

## F4.5 PERSONAL PROTECTIVE EQUIPMENT

Personal Protective Equipment (PPE) is provided to prevent undue exposure of facility personnel to hazardous waste. Personnel protection is accomplished through engineering controls (plant layout and design), administrative controls (waste management equipment and practices, employee training), and use of personal protective clothing and equipment. A medical surveillance program is utilized to monitor the effectiveness of employee protection measures.

Waste management systems are designed to minimize exposure of personnel handling waste. Liquid waste is stored/treated in closed-roof tanks. Waste is transferred within tank systems using fixed-in-place piping systems, or hoses that are inspected before use. Container lids are kept closed except when adding to, removing from, or sampling the waste.

All non-administrative personnel are required to complete training in the proper management and safe handling of hazardous waste, and in the use, selection, and proper fit of PPE. A listing of training programs is described in Section H, Personnel Training.

Each employee is provided with safety equipment for his/her personal use. This equipment, which is kept at the facility, may include: hard hats, safety glasses/goggles, acid/organic cartridge or multi constituent full face respirators, ear protection (foam plugs), cotton and/or various types of chemical resistant coveralls or equivalent, full PVC rain suits, appropriate gloves (Neoprene, PVC), and steel-toed boots. Emergency equipment available at the facility includes: first aid kits, eye wash and shower stations, and spill response kits.

While engaged in normal loading, unloading, transfer, or cleaning operations, personnel are directed to wear steel-toed boots, chemical-resistant gloves, eye/face protection, respirators as necessary, and appropriate coveralls where a splash hazard exists. All personnel within the active portion of the facility are required to wear as a minimum: eye protection, steel-toed shoes and hard hats in designated areas.

## F4.6 PROCEDURE TO MINIMIZE RELEASES INTO THE ATMOSPHERE

The purpose of air emission control and monitoring is to minimize the releases of Volatile Organic Compounds (VOCs) to the atmosphere. The description, monitoring, inspection, and recordkeeping practices for minimizing emission control at the Romic facility are discussed in Sections D1, D2, E5, M, and N of this permit application.

A detailed spreadsheet has been assembled to track the monitoring requirements in accordance with 40 CFR 264 Subparts AA, BB, and CC. Due to the comprehensive nature of the Excel spreadsheet, a disc has been attached to this document as Appendix F-5. This disc contains a printout of all points monitored in accordance with Subparts AA, BB and CC.

## F5 PREVENTION OF REACTION OF IGNITABLE, REACTIVE, AND INCOMPATIBLE WASTES

Precautions to prevent the ignition or reaction of ignitable, reactive and incompatible wastes through proper handling, mixing, and treatment procedures, and the use of compatible equipment and systems, are described in the following sections.

## F5.1 PRECAUTIONS TO PREVENT IGNITION OR REACTION OF IGNITABLE OR REACTIVE WASTES

Container management practices and a description of how UFC buffer zone requirements are satisfied for containerized waste materials are described in Section D1.

The section below describes the handling techniques employed by the Facility when storing or treating ignitable or reactive wastes in tanks.

**Ignitable Wastes**

Ignitable waste is accepted in tanks and containers for storage, distillation and/or blending of alternative fuels. Ignitable waste will be consolidated in tanks with compatible materials. All ignitable waste is stored in tank farms or warehouses away from ignition sources. “Danger-Flammable Liquids No Smoking” signs are posted prominently at the hazardous waste storage area entrance, and smoking is confined to one specific area south of the lunchroom, away from storage and treatment areas. The entire facility, with the exception of the one designated smoking area, is a No Smoking Facility.

Hazardous waste storage tanks containing potentially ignitable wastes are adequately located away from: (a) a property line that is or can be built upon and (b) the nearest side of any public way or from the nearest public building, as required by the Uniform Fire Code's (UFC) buffer zone requirements for ignitable wastes.

The following precautions are in place at the Facility to prevent the accidental ignition of ignitable waste:

For each tank that stores or treats ignitable waste the tank is equipped with:

- Conservation vents,
- Submerged fill lines.

To prevent the generation of sparks through static electricity, all steel structures are commonly grounded. This, combined with transfer grounding procedures (as recommended in NFPA 77 Recommended Practice on Static Electricity), will significantly reduce the possibility of generating a static charge during pumping operations involving flammable liquids.

All pumps, motors, and electrical equipment are grounded at the motor control center via a grounding grid beneath the motor control foundation. All connections are welded to assure proper integrity. All equipment is commonly grounded.

Furthermore, all pump motors are explosion proof and in many situations air operated diaphragm pumps are used to eliminate the possible generation of a spark. All process equipment uses standard safety equipment and design features such as rupture discs and emergency venting to prevent explosions.

**Reactive Wastes**

Reactive wastes identified in 40 CFR 261.23(a)(1), (2), (3), (4) and (5) are accepted at the Facility in quantities of 55-gallons or less and will not be stored or treated in tanks. Reactive wastes identified in 40 CFR 261.23(a)(6), (7), and (8) are specifically restricted from acceptance at the facility. Certain reactive wastes, such as aqueous cyanide solutions that can be treated for cyanide destruction, may be treated in treatment tanks 308 and 309, which are part of the wastewater treatment system.

Reactive waste will be segregated from any incompatible material while managed within the Facility.

**Special Precautions for Potentially Incompatible Wastes**

Incoming waste is tested for compatibility with waste already in the tank prior to being transferred. Waste incompatibility is determined by the procedures described in Section C7.3. Waste profile and check-in procedures are discussed in Section C4, Procedures for Receiving Off-Site Waste.

Incompatible wastes or materials are not stored in the same tank, or in an unwashed tank that previously held an incompatible material. Before a tank can be used for storage of a material that is incompatible

with residue in the tank, the tank is cleaned of residual waste. Specific incompatible wastes may be mixed during the neutralization process under controlled conditions.

## F5.2 GENERAL PRECAUTIONS FOR HANDLING IGNITABLE OR REACTIVE WASTE AND MIXING OF INCOMPATIBLE WASTE

Prior to acceptance for storage or treatment, wastes are subject to chemical and/or physical analysis to determine, based on operational constraints and permit limitations, if the waste can be safely handled at the facility. The procedures for pre-acceptance and waste profiling are described in Section C 4, Procedures for Receiving Off-Site Wastes.

Materials suspected of being incompatible or reactive are tested, prior to consolidation or blending, by mixing representative samples of the waste streams in a prescribed laboratory procedure. Noted reactions include changes in temperature, pH and color, gas evolution, and precipitation (see Section C 5, Sampling and Analysis).

In conjunction with treatment activities, waste streams are sampled and analyzed to verify safe treatment procedures, process tolerance limits, and to ensure the equipment is operated within design specifications. Sampling, analysis, treatment processes, and tolerance limits are described in Section C.

Tanks and containers are separated, based on compatibility, by secondary containment systems and appropriate distances according to UFC spacing and DOT requirements. Tanks at the facility are labeled according to the NFPA 704 Standard System For the Identification of the Hazards of Materials for Emergency Response.

Employees who perform job duties applicable to the management of ignitable, reactive, and incompatible wastes are trained in proper handling, operational methods, and emergency procedures (see Section H, Personnel Training). In the event of an incident involving reactive materials, facility personnel will respond by staying clear of the incident until the nature of the hazard has been evaluated and the determination has been made that the area is safe to enter for response activities. The procedures of Section G will be followed.

# TABLE F-1

# INSPECTION SCHEDULE

US EPA ARCHIVE DOCUMENT

**TABLE F-1**
**INSPECTION SCHEDULE**

| AREA/EQUIPMENT | SPECIFIC ITEM | TYPE OF PROBLEM; EXAMPLES | FREQUENCY |
|---|---|---|---|
| Safety & Emergency Equipment | Standard Industrial Absorbent (50 bags) | Out of sock, low inventory | Monthly/as needed |
| | Overpack (Salvage) drums | Item out of stock, low inventory | Monthly |
| | Emergency shower and eyewash | Water pressure, leaking, drainage | Monthly |
| | Protective clothing & gloves | Low inventory; holes, normal wear and tear | Monthly |
| | Chemical cartridge respirators with appropriate cartridges | Seal, spent chemical absorbent (cartridge) | Monthly/after each use |
| | SCBA | Mask Cracked, low air supply | Monthly/after each use |
| | Flame Ionization Detector (FID) or similar instrumentation | Calibration | Daily – when used, prior to use |
| | First aid kits | Items out of stock | Monthly/after each use |
| | Fire water flow alarm system | Power failure | Annually |
| | Evacuation Alarm Air Horns | Corrosion, malfunction | Monthly |
| | Telephone system | Power failure | Monthly, through use |
| | 2-way radios | Low battery, malfunction | Monthly, through use |
| | Fire Hoses | Good condition, no tears, damage | Monthly |
| | Fire Hydrants/FDC | Clear access, no obstructions | Monthly |
| | Fire extinguishers | Need recharging | Monthly/after each use |
| | AFFF Foam Unit | Foam degradation | Biennially |

US EPA ARCHIVE DOCUMENT

**TABLE F-1**
**INSPECTION SCHEDULE**

| AREA/EQUIPMENT | SPECIFIC ITEM | TYPE OF PROBLEM; EXAMPLES | FREQUENCY |
|---|---|---|---|
| Waste Storage Tank Areas: A&B, C, D<br>Future Waste Storage Tank Areas E, F<br>Future Treatment Tank Area G | Containment area: Dike Wall and berms, base or foundation | Cracks, deterioration, uneven settlement, erosion, wet spots | Daily |
| | Sump area | Standing liquid – cracks, erosion | Daily |
| | Piping, fittings, flanges, other connections | Leaks, loss of metal thickness, corrosion or deterioration | Daily |
| | Valves | Leaks, loss of metal thickness, corrosion or deterioration, locks in place | Daily |
| | Standing liquid in containment area | Observe for presence | Daily |
| | Pumps | Leaks, wet spots | Daily |
| | Ladders | Damaged, structural stability | Annually |
| Waste Storage Tanks:<br>* indicates tanks not included in Part B Permit<br>Tanks 101-105, 112, 200*, 201-204*, (Tank Farm A&B)<br>Tanks 121-124, 113, 132, 136, 211-222* (Tank Farm C&D)<br>Future Tanks 108,109, 137, 138, 401-403, 411-413, 310-303, 308, 309 311-313, 321-323 | Tank shell | Corrosion, cracks, buckles, bulges | Daily |
| | Tank bottom (cone) | Corrosion, cracks, buckles, bulges | Daily |
| | Leaks – general | General observation for evidence of leaks | Daily |
| | Level indicators, if so equipped | No reading, unexpected reading | Daily |
| | Tank roof | Seal malfunctions, corrosion | Annually |
| | Subpart CC Visual Inspection of Fixed Roof Tanks | Closures not secured; cracks, gaps, or holes in shell | Annually |
| | Conservation (Varec) Vents | Confirmation of no detectable emissions (< 500ppm) | Annually |
| | Shell thickness | Corrosion, metal loss, erosion | Biennially |

US EPA ARCHIVE DOCUMENT

**TABLE F-1**
**INSPECTION SCHEDULE**

| AREA/EQUIPMENT | SPECIFIC ITEM | TYPE OF PROBLEM; EXAMPLES | FREQUENCY |
|---|---|---|---|
| Waste Treatment Units:<br>Fractionation Column, Vac Pot Distillation, Thin Film Evaporation, Aerosol Can Depressurization Unit<br>Future Fuel Blending (Tanks 137 & 138)<br>Future Neutralization (Tanks 308 & 309) | Ladders | Damaged, structural stability | Annually |
| | Foundation | Cracks, uneven settlement, erosion, wet spots | Weekly |
| | Pipe connections | External corrosion, cracks, distortions | Daily |
| | Tank shell | Corrosion, cracks, buckles, bulges | Daily |
| | Tank roof | Seal malfunctions, corrosion | Daily |
| | Tank bottom | Corrosion, cracks, buckles, bulges | Daily |
| | Leaks – general | General observation for leaks | Daily |
| | Monitoring Equipment (pressure gauges, level indicators) | Not operational; readings out of range, indicating problem with unit operation or monitoring equipment | Daily |
| | Vents | Plugging, waste discharge | Annually |
| | Pumps | Leaks, wet spots | Daily |
| | Piping, fittings, flanges, other connections | Leaks, loss of metal thickness, corrosion or deterioration | Daily |
| | Valves | Leaks, corrosion or deterioration, locks in place | Daily |
| | Subpart CC Visual Inspection of Fixed Roof Tanks | Closures not secured; cracks, gaps, or holes in shell | Annually |
| | Alarm Panels | Audible alarms not working, lamps burned out | Weekly |

US EPA ARCHIVE DOCUMENT

**TABLE F-1**
**INSPECTION SCHEDULE**

| AREA/EQUIPMENT | SPECIFIC ITEM | TYPE OF PROBLEM; EXAMPLES | FREQUENCY |
|---|---|---|---|
| Waste Treatment Units – Secondary Containment Areas:<br>Fractionation area, Vac Pot & Thin Film area, Aerosol Can Depressurization unit area | Containment area: Dike Wall and berms, base or foundation | Cracks, deterioration, uneven settlement, erosion, wet spots | Daily |
| | Sump area | Standing liquid - cracks, erosion | Daily |
| | Standing liquid in containment area | Observe for presence | Daily |
| Loading and Unloading Areas:<br>Rail Car/Rolloff Bin Area, Tank Areas A, C, D, Distillation Area<br>Future Tank Areas E, F, G | Containment area: Dike Wall and berms, base or foundation | Cracks, deterioration, uneven settlement, erosion, wet spots | Daily |
| | Sump area | Standing liquid – cracks, erosion | Daily |
| | Standing liquid in containment area or trough | Observe for presence | Daily |
| Subpart BB Equipment | Pumps (except pumps designated “no detectable emissions”) | Observe for pump seal leaks | Weekly |
| | Pumps (except pumps designated “no detectable emissions”) | Instrument reading of 10,000 ppm or greater; liquids dripping from pump seal | Monthly |
| | Pumps designated “no detectable emissions” | Exceed “no detectable emissions” level (500 ppm) | Annually |
| | Valves (except valves designated “no detectable emissions”) | Instrument reading of 10,000 ppm or greater | Monthly, Quarterly if two consecutive leak-free months |
| | Valves designated “no detectable emissions” | Exceed “no detectable emissions” level (500 ppm) | Annually |
| | Pressure Relief Devices | Instrument reading of > 500 ppm | After evidence of pressure release |

US EPA ARCHIVE DOCUMENT

**TABLE F-1**
**INSPECTION SCHEDULE**

| AREA/EQUIPMENT | SPECIFIC ITEM | TYPE OF PROBLEM; EXAMPLES | FREQUENCY |
|---|---|---|---|
| Subpart CC equipment | Conservation vents (Varecs) | Exceed “no detectable emissions” level (500 ppm) | Annually |
| Closed-vent (vapor collection) system | Vent piping and sealed connections | Visual evidence of leakage, damage, or other leakage | Annually |
| | Monitor vapor collection system components other than sealed connections (e.g., valves) | Instrument reading greater than 500 ppm | Annually |
| VOC System and Carbon Beds | Operating parameters (PLC screen and chart record) | Recorder operating, Parameter out of normal operating range:<br>condenser temperature too high (normal range – 5C to +10C during chill cycle)<br>air/vapor flow rate 0 to 120 scfm<br>compressor pressure 100 psia | Daily |
| | Valves, flanges, pumps | Leaks | Daily |
| | Vent flow meters | Reasonable flow readings with flow, no readings with no flow | Daily |
| | Carbon beds | Instrument reading after Bed 4 greater than background | Daily |
| Drum Storage Buildings:<br>Warehouse 1 & Warehouse 2 | Container stacking | Aisle space, height or stacks, proper segregation | Weekly |
| | Storage of ignitables and reactives | Ignitable or reactive container within 50 ft of property boundary | Weekly |
| | Sealing of containers | Open lids or bung holes. | Weekly |
| | Labeling of containers | Hazardous waste labels – incomplete, torn, missing, incorrect | Weekly |
| | Containers | Corrosion, leaks, structural defects, waste on exterior, incompatible | Weekly |
| | Containment area: Dike Wall and berms, base or foundation | Cracks, deterioration, uneven settlement, erosion, wet spots, absorbent to be cleaned up | Weekly |

US EPA ARCHIVE DOCUMENT

**TABLE F-1**
**INSPECTION SCHEDULE**

| AREA/EQUIPMENT | SPECIFIC ITEM | TYPE OF PROBLEM; EXAMPLES | FREQUENCY |
|---|---|---|---|
| Security Devices | Facility fence | Corrosion, damage to chain link or barbed wire | Semiannually |
| | Warning Signs | Missing, non-legible from 25' | Monthly |
| | NFPA (704) Labels | Missing, needing replacement | Monthly |
| | Gates | Mechanical malfunctions | Monthly |
| | Locks (gates) | Missing lock | Monthly |
| | Outdoor Lighting | Mechanical malfunctions | Semiannually |
| Operational Equipment<br>Includes equipment in normal use that can also be used for emergency operations and decontamination | Portable Transfer Pumps | Check for leaks, proper operation, check oil level<br>Verify all units are in working order | Daily – When used<br>Weekly |
| | Portable Transfer Hoses | Check for wear, leaks in hose or at fittings | Daily – When used |
| | Fork Lifts | Low oil, low hydraulic fluid, low water, low tire pressure, non-functioning lights, horn, back up alarm | Daily – By shift when used |
| | Facility Air Compressor | Oil leaks, full of condensate<br>Check for oil leaks, test safety valves, clean air filter | Daily – When used<br>Monthly |
| | Facility Pumps (mounted) | Leaking, evidence of corrosion or damage<br>Verify all units are in working order | When used<br>Weekly |
| | Power washer | Leaking, evidence of corrosion or damage | Monthly |
| | Tanker trucks (vacuum transfer) | Tank condition, corrosion | Annually |

# FIGURE F-1

# CONTROLLED ACCESS POINTS

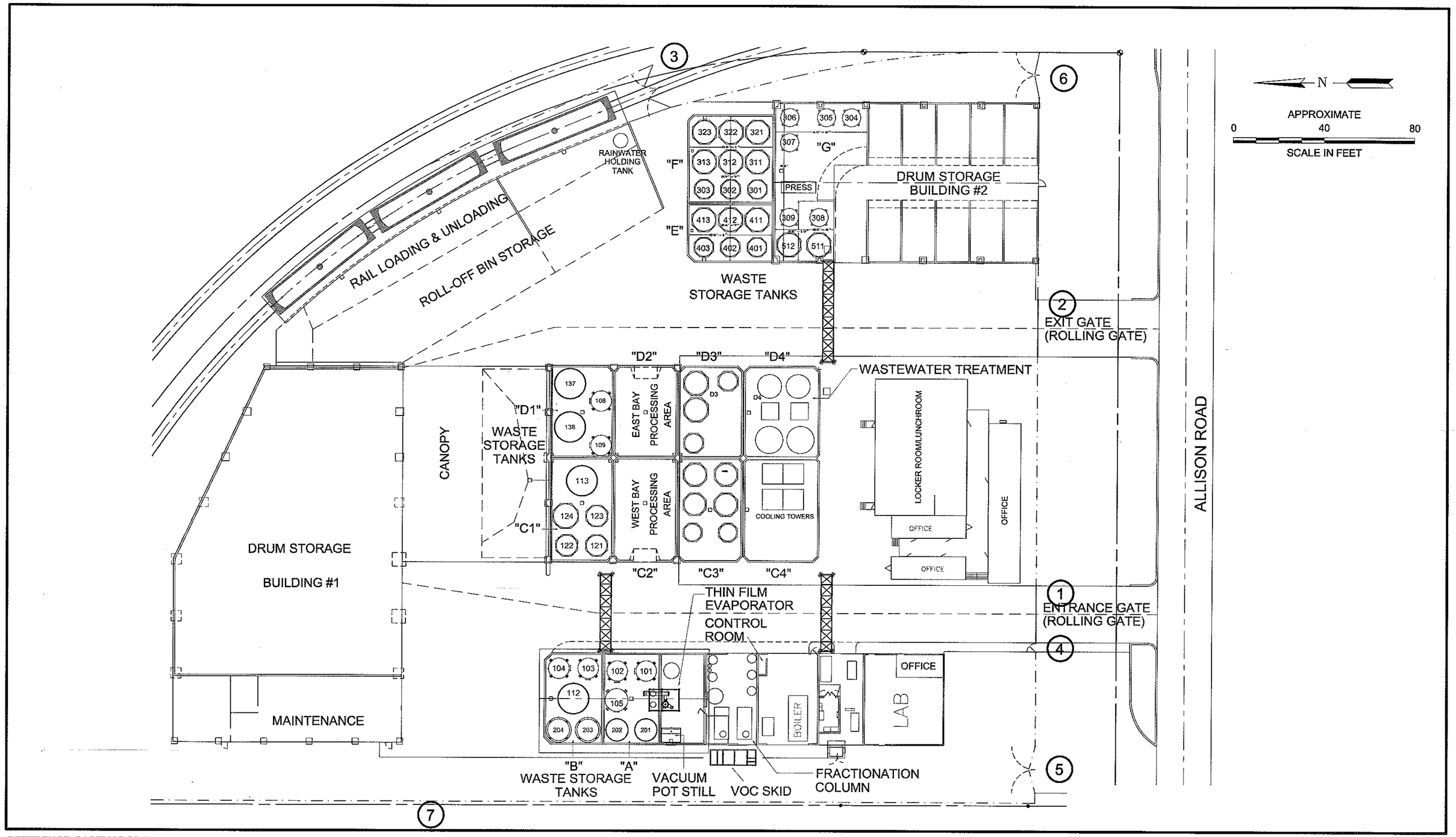


REFERENCE: BASEMAP PROVIDED BY:

ROMIC ENVIRONMENTAL TECHNOLOGIES CORP.
ROMIC SOUTHWEST, CHANDLER, ARIZONA

URS

LEGEND:

1. Electrically Controlled Access (ENTRY)
2. Electrically Controlled Access (EXIT)
3. Railroad Access
4. Controlled Access (Personnel)
5. Controlled Access
6. Controlled Access
7. Controlled Access (Fire Truck Only)

# Controlled Access Points

Romic - Southwest
Chandler, Arizona

Figure F-1

P:\ROMIC\2005 UPDATES\NEW CADD\A16446.DWG 1-14-05

# APPENDICES

# APPENDIX F-1

# EXAMPLE INSPECTION FORMS

*The forms included in this appendix are for example only. The information contained on the forms will be included on any version of the forms used for the same purposes, although the forms themselves may change in appearance.*

**ROMIC RCRA INSPECTION FORM**

Date: _____

| | | |
|---|---|---|
| Pages 2 to 2 | General Facility | Supervisor Signature: _____ |
| Pages 3 to 6 | Production | Supervisor Signature: _____ |
| Pages 7 to 8 | Warehouse | Supervisor Signature: _____ |
| Pages 9 to 9 | Field Services | Supervisor Signature: _____ |

Frequency (FREQ) Codes:

| | | |
|---|---|---|
| D | = | Daily |
| W | = | Weekly, on Tuesdays |
| M | = | Monthly, during second week of the month |
| S | = | Semi Annually, during April and October |
| Y | = | Yearly, during October |

General Instructions:

Complete and compile full package daily.

Revised 5/14/2004

**ROMIC RCRA INSPECTION FORM** **GENERAL FACILITY**

❑ Check here if additional sheets are attached.

| ITEM/AREA | FREQ | ACCEPTABLE YES | ACCEPTABLE NO | COMMENTS/WORK ORDER # |
|---|---|---|---|---|
| SITE SECURITY | | | | |
| Front gates operational | M | | | |
| Other gates locked securely | M | | | |
| Signs legible from 25 feet, NFPA Diamond ok | M | | | |
| Fence (walk the perimeter, no gaps, breaks, broken strands of barbed wire) | S | | | |

| EMERGENCY EQUIPMENT (refer to emergency equipment locations map in Contingency Plan) | | | | |
|---|---|---|---|---|
| Emergency Showers and Eyewash Units (operating, sufficient flow) | M | | | |
| SCBA (adequate air supply/ pressure, mask condition) | M | | | |
| Telephone System (operating properly) | M | | | |
| 2-Way Radios (operating properly) | M | | | |
| Fire extinguishers (fully charged, seal intact) | M | | | |
| Fire hoses (in good condition, no tears or damage) | M | | | |
| Evacuation Air Horns (operating properly) | M | | | |
| Fire Hydrants (Clear access, no obstruction) | M | | | |

| SAFETY SUPPLIES | | | | |
|---|---|---|---|---|
| First aid kits (adequate supply, condition) | M | | | |
| Absorbent (adequate supply—50 bags min.) | M | | | |
| Overpack Drums (adequate supply—20 min.) | M | | | |
| PPE (adequate supply, condition) | M | | | |
| Respirator cartridges (adequate supply, end-of-service-life indicator ok) | M | | | |

| Printed Name: | Date/Time: |
|---|---|
| Signature | |



Rev. 5/14/04

Deleted: 5

Deleted: 4

Deleted: 1

**ROMIC RCRA INSPECTION FORM** **PRODUCTION**

❑ Check here if additional sheets are attached.

| ITEM/AREA | FREQ | ACCEPTABLE YES | ACCEPTABLE NO | COMMENTS/WORK ORDER # |
|---|---|---|---|---|
| BOILER AREA: VOC System, Chiller, Boiler, Carbon Beds | | | | |
| General housekeeping (no loose materials, trash, PPE, spill residues, tools, equipment, supplies, etc.) | D | | | |
| No standing liquids in containment (unless w/in 24 hrs of rainstorm) | D | | | Note time rain ended: |
| VOC System (data recording system operating, parameters within specified ranges) | D | | | |
| Vent Flowmeters (readout reasonable; if no flow expected, readout is within +/- 1 scfm) | D | | | |
| Valves not leaking, closed and capped when not in use | D | | | |
| Flanges, other connections not leaking | D | | | |
| Pumps not leaking | D | | | |

| | | | | |
|---|---|---|---|---|
| Tank Farms A & B: Tanks 101-105, 200, 201-204, 112 | | | | |
| General housekeeping (no loose materials, trash, PPE, spill residues, tools, equipment, supplies, etc.) | D | | | |
| Containment Area (No evidence of leaks, cracks, gaps, damage) | D | | | |
| No standing liquids in containment (unless w/in 24 hrs of rainstorm) | D | | | Note time rain ended: |
| Condition of tanks (no leaks or excessive corrosion) | D | | | |
| Level indicators operating | D | | | |
| Valves not leaking, closed and capped when not in use | D | | | |
| Flanges, other connections not leaking | D | | | |
| Pumps not leaking | D | | | |

Deleted: 5

Deleted: 4

Deleted: 1

| | |
|---|---|
| Printed Name: | Date/Time: |
| Signature | |

**ROMIC RCRA INSPECTION FORM** **PRODUCTION**

❑ Check here if additional sheets are attached.

| ITEM/AREA | FREQ | ACCEPTABLE YES | ACCEPTABLE NO | COMMENTS/WORK ORDER # |
|---|---|---|---|---|
| Tank Farms C, D: Tanks 121-124, 113, 132, 136, 211-222 (Tank Farm D will change with future addition of tanks 108, 109, 137, 138, and deletion of tanks 132 and 136) | | | | |
| General housekeeping (no loose materials, trash, PPE, spill residues, tools, equipment, supplies, etc.) | D | | | |
| Containment Area (No evidence of leaks, cracks, gaps, damage) | D | | | |
| No standing liquids in containment (unless w/in 24 hrs of rainstorm) | D | | | Note time rain ended: |
| Condition of tanks (no leaks or excessive corrosion) | D | | | |
| Valves closed and capped when not in use | D | | | |
| Sampling valves closed and capped | D | | | |
| Flanges, other connections not leaking | D | | | |
| Pumps not leaking | D | | | |

| | | | | |
|---|---|---|---|---|
| FutureTank Farm E, F and Treatment Area G: Tanks 401-403, 411-413, 301-303, 308, 309, 311-313, 321-323 | | | | |
| General housekeeping (no loose materials, trash, PPE, spill residues, tools, equipment, supplies, etc.) | D | | | |
| Containment Area (No evidence of leaks, cracks, gaps, damage) | D | | | |
| No standing liquids in containment (unless w/in 24 hrs of rainstorm) | D | | | Note time rain ended: |
| Condition of tanks (no leaks or excessive corrosion) | D | | | |
| Valves closed and capped when not in use | D | | | |
| Flanges, other connections not leaking | D | | | |
| Pumps not leaking | D | | | |

Deleted: 5

Deleted: 4

Deleted: 1

| | |
|---|---|
| Printed Name: | Date/Time: |
| Signature | |

**ROMIC RCRA INSPECTION FORM** **PRODUCTION**

❑ Check here if additional sheets are attached.

| ITEM/AREA | FREQ | ACCEPTABLE YES | ACCEPTABLE NO | COMMENTS/WORK ORDER # |
|---|---|---|---|---|
| Railspur Area: Storm Water Tank, Rail cars in Containment | | | | |
| General housekeeping (no loose materials, trash, PPE, spill residues, tools, equipment, supplies, etc.) | D | | | |
| Containment Area (No evidence of leaks, cracks, gaps, damage) | D | | | |
| No standing liquids in containment (unless w/in 24 hrs of rainstorm) | D | | | Note time rain ended: |
| Condition of tanks & rail cars (no leaks or excessive corrosion) | D | | | |
| Valves not leaking, closed and capped when not in use | D | | | |
| Flanges, other connections not leaking | D | | | |
| Pumps not leaking | D | | | |

| | | | | |
|---|---|---|---|---|
| Canopy area | | | | |
| General housekeeping (no loose materials, trash, PPE, spill residues, tools, equipment, supplies, etc.) | D | | | |
| Containment Area (No evidence of leaks, cracks, gaps, damage) | D | | | |
| No standing liquids in containment (unless w/in 24 hrs of rainstorm) | D | | | Note time rain ended: |
| Pumps not leaking | D | | | |

Deleted: 5

Deleted: 4

Deleted: 1

| | |
|---|---|
| Printed Name: | Date/Time: |
| Signature | |

**ROMIC RCRA INSPECTION FORM** **PRODUCTION**

❑ Check here if additional sheets are attached.

| ITEM/AREA | FREQ | ACCEPTABLE YES | ACCEPTABLE NO | COMMENTS/WORK ORDER # |
|---|---|---|---|---|
| Non-Hazardous Waste Tank Farm, Cooling Towers [not part of required RCRA Inspection] | | | | |
| General housekeeping (no loose materials, trash, PPE, spill residues, tools, equipment, supplies, etc.) | D | | | |
| Containment Area (No evidence of leaks, cracks, gaps, damage) | D | | | |
| No standing liquids in containment (unless w/in 24 hrs of rainstorm) | D | | | Note time rain ended: |
| Condition of tanks (no leaks or excessive corrosion) | D | | | |
| Valves not leaking, closed and capped when not in use | D | | | |
| Flanges, other connections not leaking | D | | | |
| Pumps not leaking | D | | | |

| | | | | |
|---|---|---|---|---|
| Production Area: Column, Thin Filmer, Vac Pot | | | | |
| General housekeeping (no loose materials, trash, PPE, spill residues, tools, equipment, supplies, etc.) | D | | | |
| Containment Area (No evidence of leaks, cracks, gaps, damage) | D | | | |
| No standing liquids in containment (unless w/in 24 hrs of rainstorm) | D | | | Note time rain ended: |
| Monitoring Equip (pressure gauges, level indicators) | D | | | |
| Condition of process units (no leaks or excessive corrosion) | D | | | |
| Condition of tanks (no leaks or excessive corrosion) | D | | | |
| Valves not leaking, closed and capped when not in use | D | | | |
| Flanges, other connections not leaking | D | | | |
| Pumps not leaking | D | | | |
| Alarm/Control panels functioning properly | D | | | |

| | |
|---|---|
| Printed Name: | Date/Time: |
| Signature | |



Rev. 5/14/04

Deleted: 5

Deleted: 4

Deleted: 1

**ROMIC RCRA INSPECTION FORM** **WAREHOUSE**

❑ Check here if additional sheets are attached.

| ITEM/AREA | FREQ | ACCEPTABLE YES | ACCEPTABLE NO | COMMENTS/WORK ORDER # |
|---|---|---|---|---|
| Sampling Area (in Building 1) | | | | |
| Containment Area (No evidence of leaks, cracks, gaps, damage) | W | | | |
| No spill residues or liquids on floor | W | | | |
| Aisle spacing adequate, in accordance with permit | W | | | |
| Containers stacked properly, within the lines | W | | | |
| Containers properly closed, ring tops secured, unless sampling | W | | | |
| Container condition (no leakers, bulgers, damaged drums) | W | | | |
| Container labeling (no labels missing, or damaged or torn so they are illegible) | W | | | |
| Incompatibles segregated | W | | | |

| Warehouse #1 (Building 1) | | | | |
|---|---|---|---|---|
| Containment Area (No evidence of leaks, cracks, gaps, damage) | W | | | |
| No spill residues or liquids on floor | W | | | |
| Aisle spacing adequate, in accordance with permit | W | | | |
| Containers stacked properly, within the lines; no leaners; within height limit | W | | | |
| Containers properly closed, ring tops secured | W | | | |
| Container condition (no leakers, bulgers, damaged drums) | W | | | |
| Container labeling (no labels missing, or damaged or torn so they are illegible) | W | | | |
| No ignitables/reactives within the 50-ft. line. | W | | | |
| Incompatibles segregated | W | | | |

| Printed Name: | Date/Time: |
|---|---|
| Signature | |





Deleted: 5

Deleted: 4

Deleted: 1

**ROMIC RCRA INSPECTION FORM** **WAREHOUSE**

❑ Check here if additional sheets are attached.

| ITEM/AREA | FREQ | ACCEPTABLE YES | ACCEPTABLE NO | COMMENTS/WORK ORDER # |
|---|---|---|---|---|
| Warehouse #2 (Building 2) | | | | |
| Containment Area (No evidence of leaks, cracks, gaps, damage) | W | | | |
| No spill residues or liquids on floor | W | | | |
| Aisle spacing adequate, in accordance with permit | W | | | |
| Containers stacked properly, within the lines; no leaners; within height limit | W | | | |
| Containers properly closed, ring tops secured | W | | | |
| Container condition (no leakers, bulgers, damaged drums) | W | | | |
| Container labeling (no labels missing, damaged or torn so they are illegible) | W | | | |
| No ignitables/reactives within the 50-ft. line. | W | | | |
| Incompatibles segregated | W | | | |

| | | | | |
|---|---|---|---|---|
| West Bay Processing Area: Aerosol Can Unit, Drum Crusher | | | | |
| Containment Area (No evidence of leaks, cracks, gaps, damage) | W | | | |
| No spill residues or liquids on floor | W | | | |
| Aisle spacing adequate, in accordance with permit | W | | | |
| Aerosol can unit not leaking, liquid receiving drum not full, carbon beds intact | W | | | |
| Containers properly closed, ring tops secured, unless sampling | W | | | |
| Container condition (no leakers, bulgers, damaged drums) | W | | | |
| Container labeling (no labels missing, damaged or torn so they are illegible) | W | | | |

Deleted: 5

Deleted: 4

Deleted: 1

| | |
|---|---|
| Printed Name: | Date/Time: |
| Signature | |

**ROMIC RCRA INSPECTION FORM** **FIELD SERVICES**

❑ Check here if additional sheets are attached.

| ITEM/AREA | FREQ | ACCEPTABLE YES | ACCEPTABLE NO | COMMENTS/WORK ORDER # |
|---|---|---|---|---|
| East Bay Processing Area | | | | |
| Containment Area (No evidence of leaks, cracks, gaps, damage) | W | | | |
| No spill residues or liquids on floor | W | | | |
| Aisle spacing adequate, in accordance with permit | W | | | |
| Containers stacked properly, within the lines | W | | | |
| Containers properly closed, ring tops secured, unless sampling | W | | | |
| Container condition (no leakers, bulgers, damaged drums) | W | | | |
| Container labeling (no labels missing, damaged or torn so they are illegible) | W | | | |

Deleted: 5

Deleted: 4

Deleted: 1

| Printed Name: | Date/Time: |
|---|---|
| Signature | |

US EPA ARCHIVE DOCUMENT

**Temperature Readings**

From main screen press the F3 key to get to the Temperature Display, then record the following temperatures:

Condenser #1: _____°C

Condenser #2: _____°C

Separator #1: _____°C

Separator #2: _____°C

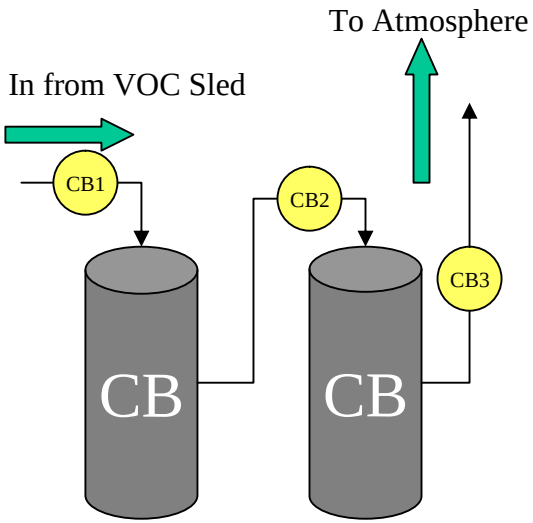


Tester Initials:_____ Date/Time: _____

**Background:_____ ppm** **CB1(Pre): _____ ppm**

**CB2(Mid): _____ ppm**

**Carbon Changeout Levels:** **CB3(Post): _____ ppm**

**NOTE:** If breakthrough occurs from the first carbon bed, as indicated by a less than 95% reduction in measured VOC concentration across the bed, the first carbon bed will be changed out when the distillation processes are next shut down, but no later than 24 hours after detection. The second carbon bed will be placed in the position of the first carbon bed, and a fresh carbon bed placed in the second position. If breakthrough occurs from the second carbon bed, as indicated by a less than 95% reduction measured VOC concentration across the two-bed system, all distillation processes will be shut down as expeditiously as practicable, and both carbon beds replaced with fresh carbon. e.g. **CB1=1000ppm CB3=>50ppm 95 % reduction**

Notify Eric Fuller of any readings requiring carbon changeout as soon as practical.

# Ensure vapors are being directed to the carbon beds when taking these readings

**Procedures:**

1. Find VOC Skid Control Panel.
2. Press the F1 key.
3. Ensure the VOC exhaust is routed to the Carbon Bed.
4. If icon is green and reads ATMOS, press icon to switch to Carbon Bed.
5. Wait 15 minutes before proceeding with the readings.

**CB1 (before carbon beds)**

1. Record Background
2. Locate Sample Port CB1(Marked in yellow)
3. Remove plug slowly to ensure positive flow
4. Place FID adjacent to sample port
5. Allow reading to stabilize
6. Record reading on Monitoring form
7. Replace sample plug
8. Go to sample port CB2

**CB2 (between Carbon Bed 1 and Carbon Bed 2):**

1. Locate Sample Port CB2 (Marked in yellow)
2. Remove plug slowly to ensure positive flow
3. Place FID adjacent to sample port
4. Allow reading to stabilize
5. Record reading on Monitoring form
6. Replace sample plug
7. Go to sample port CB3

**CB3 (after Carbon Bed 2):**

1. Place FID adjacent to atmospheric vent (Marked in yellow)
2. Allow reading to stabilize
3. Record reading on Monitoring form

revised 7/21/04

# APPENDIX F-2

# EXAMPLE MAINTENANCE REQUEST FORM

*The forms included in this appendix are for example only. The information contained on the forms will be included on any version of the forms used for the same purposes, although the forms themselves may change in appearance.*

ROMIC
ENVIRONMENTAL TECHNOLOGIES CORP.

# Maintenance Work Request No. 05060

## ORIGINATOR USE ONLY

Originator _____

Work Location _____

Date Requested _____

**Priority** (Check One)
__ E-Emergency (Immediate)
__ U-Urgent (1 day)
__ R-Routine (6 days)
__ B-Backlog (>6 days)

**Priority Class**
__ Safety
__ Environmental
__ Production

**Subpart BB: Will this work:**

___ **Yes** Be issued to repair a Pump/valve/flange leak >1 drip (10,000 ppm) or: cause the replacement of a new valve/punp/ flange under RCRA BB?

**VOC TAG NUMBER(S)**

_____

***Contact Enviro. Prior to work.**

**Work Description:** _____

**Supervisor** _____

## FOR MAINTENANCE USE ONLY

Date Received _____

Shutdown Required Yes No

Estimated Manhours _____

Supervisor Comments: _____

| Permits Needed | Number |
|---|---|
| (check) | |
| __ Hot Work | _____ |
| __ Lockout/Tagout | _____ |
| __ Confined Space Entry | _____ |

**PSM — Will this work Request:**

__ **Yes** Cause the use of "**other than in-kind**" equipment i.e. instrumentation, valves that may affect the process?

__ **Yes** Require modifying existing and/or developing new Procedures?

__ **Yes** Be issued to follow-up on an incident investigation recommendation?

**Note: If any of above are checked an MOC is required.**

Supervisor Signature:

Work Descripition: _____

Part & Materials Used: _____

Pages Attached: __ Pump Overhaul Sheet __ Seal Overhaul Sheet __ Valve Overhaul Sheet __ Management of Change __ Other

Date Started _____ Date Completed _____

Mech. Assigned To _____ Total Hours _____ Mtc Supervisor Signature _____

**Distribution: White-Maintenance, Blue-Originator/Receipt, Pink-Originator, Yellow-Environmental/Safety**

# APPENDIX F-3

## MEMORANDUM OF AGREEMENT:

**Gila River Emergency Services**

**Chandler Regional Hospital**

**Arizona Department of Public Safety (Transportation)**

GILA RIVER INDIAN COMMUNITY
SACATON, AZ 85247

**LAW OFFICE**
Post Office Box 97
(520) 562-3311 or (602) 963-4323
Fax: (520) 562-3433

July 23, 1996

Gregory Hedger
Regulations Affairs Manager
ROMIC
6760 W. Allison Road
P.O. Box 5004
Chandler, Arizona 85226

RE: Jurisdiction over lands located within the Lone Butte Industrial Park

Dear Mr. Hedger

As you know, the Lone Butte Industrial Park (the "Park") is located within the exterior boundaries of the Gila River Indian Community (the "Community") and thus on reservation lands. Any incidents that occur within these boundaries, including within the Park are subject to the jurisdiction of the Community and those governmental services the Community provides. In the event of an emergent situation at your facility or within the Park, the responding agency would be the Gila River Indian Community Fire Department or other emergency personnel serving the Gila River Indian Community. Because the Park is located on the reservation the City of Chandler would not have jurisdiction to respond to emergency situations at the Park. I hope this clarifies any questions you may have regarding the party that would be responding to emergency calls at your facility. Should you require further clarification or have additional questions, please do not hesitate to contact me.

Sincerely,

Charlene D. Jackson

Charlene D. Jackson
Assistant General Counsel

xc: Gila River Fire Department
file

ecology
and
economy
through
reclamation

# ROMIC
CHEMICAL CORPORATION
SOUTHWEST

*Reclamation of Solvents, Chemicals for All Industries*

6760 W. ALLISON RD. • P.O. BOX 5004 • CHANDLER, AZ 85226 • PHONE (602) 961-1040 • FAX: (602) 961-7944

Romic Chemical Corp. Southwest may contact you for assistance regarding an emergency situation. This letter will function as acknowledgement of the service requested.

In compliance with the Resource Conservation and Recovery Act (RCRA) and U.S.E.P.A. we are notifying you that our contingency plans address emergency services (please see enclosed) and according to RCRA 40 CFR 265.52 we must describe arrangements agreed to.

Please read the attached agreement and sign the acknowledgement below. Return this acknowledgement by return mail for our files and maintain our plan in your files for possible reference.

Thank you for your expedient response to this request.

Anne Grace, RN
Paramedic Coord.
821-3206

Very Truly Yours,
ROMIC CHEMICAL CORP. SOUTHWEST

Richard McIver

Richard McIver
Regulatory Affairs Supervisor

---

This acknowledgement serves as notice that the undersigned, a representative of Chandler Regional Hospital Company has received a copy of the Romic Chemical Corp. Southwest contingency plan and arrangements requested by Romic. We acknowledge agreement to provide specific services requested and bill for those services accordingly.

SIGNED BY Kenneth A. Brown

PRINT NAME Kenneth Aaron Brown

TITLE Medical Director

COMPANY Chandler Regional Hospt

ADDRESS 475 S. Dobson

Zip. 85224

SERVICE REQUESTED Emergency Medical Assistance.

DATE OF RECEIPT 4-6-89

ecology
and
economy
through
reclamation

ROMIC
CHEMICAL CORPORATION
SOUTHWEST

*Reclamation of Solvents, Chemicals for All Industries*

6760 W. ALLISON RD. • P.O. BOX 5004 • CHANDLER, AZ 85226 • PHONE (602) 961-1040 • FAX: (602) 961-7944

Romic Chemical Corp. Southwest may contact you for assistance regarding an emergency situation. This letter will function as acknowledgement of the service requested.

In compliance with the Resource Conservation and Recovery Act (RCRA) and U.S.E.P.A. we are notifying you that our contingency plans address emergency services (please see enclosed) and according to RCRA 40 CFR 265.52 we must describe arrangements agreed to.

Please read the attached agreement and sign the acknowledgement below. Return this acknowledgement by return mail for our files and maintain our plan in your files for possible reference.

Thank you for your expedient response to this request.

Very Truly Yours,
ROMIC CHEMICAL CORP. SOUTHWEST

Richard McIver

Richard McIver
Regulatory Affairs Supervisor

---

This acknowledgement serves as notice that the undersigned, a representative of Arizona D.P.S. Company has received a copy of the Romic Chemical Corp. Southwest contingency plan and arrangements requested by Romic. We acknowledge agreement to provide specific services requested and bill for those services accordingly.

SIGNED BY _____ COMPANY ARIZONA DEPT. OF PUBLIC SAFETY

PRINT NAME STEVE HERMANN ADDRESS P.O. Box 6638, Phoenix, Arizona 85005-6638

TITLE HAZ. MAT. UNIT COMMANDER SERVICE REQUESTED Coordinator D.P.S. responses,pertaining to I-10.

DATE OF RECEIPT APRIL 17, 1989

# APPENDIX F-4

## EXAMPLES OF COMPLETED INSPECTION FORMS

Routine Inspection Forms

Carbon Inspection Forms

ROMIC RCRA INSPECTION FORM

Date: 12/20/04 (MLS)

| | |
|---|---|
| Pages 2 to 2 General Facility | Supervisor Signature: _____ |
| Pages 3 to 6 Production | Supervisor Signature: _____ |
| Pages 7 to 8 Warehouse | Supervisor Signature: _____ |
| Pages 9 to 9 Field Services | Supervisor Signature: _____ |

Frequency (FREQ) Codes:

| | | |
|---|---|---|
| D | = | Daily |
| W | = | Weekly, on Tuesdays |
| M | = | Monthly, during second week of the month |
| S | = | Semi Annually, during April and October |
| Y | = | Yearly, during October |

General Instructions:

Complete and compile full package daily.

ROMIC RCRA INSPECTION FORM

PRODUCTION

❑ Check here if additional sheets are attached.

| ITEM/AREA | FREQ | ACCEPTABLE YES | ACCEPTABLE NO | COMMENTS/WORK ORDER # |
|---|---|---|---|---|
| BOILER AREA: VOC System, Chiller, Boiler, Carbon Beds | | | | |
| General housekeeping (no loose materials, trash, PPE, spill residues, tools, equipment, supplies, etc.) | D | OK | | |
| No standing liquids in containment (unless w/in 24 hrs of rainstorm) | D | OK | | Note time rain ended: |
| VOC System (data recording system operating, parameters within specified ranges) | D | OK | | |
| Vent Flowmeters (readout reasonable; if no flow expected, readout is within +/- 1 scfm) | D | OK | | |
| Valves not leaking, closed and capped when not in use | D | OK | | |
| Flanges, other connections not leaking | D | OK | | |
| Pumps not leaking | D | OK | | |

| Tank Farms A & B: Tanks 101-105,200,201-204, 210, 112 | | | | |
|---|---|---|---|---|
| General housekeeping (no loose materials, trash, PPE, spill residues, tools, equipment, supplies, etc.) | D | | ✓ | Need to clean NMP/DEC off floor (spill) |
| Containment Area (No evidence of leaks, cracks, gaps, damage) | D | OK | | |
| No standing liquids in containment (unless w/in 24 hrs of rainstorm) | D | OK | | Note time rain ended: see above |
| Condition of tanks (no leaks or excessive corrosion) | D | OK | | |
| Level indicators operating | D | OK | | |
| Valves not leaking, closed and capped when not in use | D | OK | | |
| Flanges, other connections not leaking | D | OK | | |
| Pumps not leaking | D | OK | | |

| Printed Name: | Date/Time: |
|---|---|
| Signature | |



Rev. 5/14/04

❑ Check here if additional sheets are attached.

| ITEM/AREA | FREQ | ACCEPTABLE YES | ACCEPTABLE NO | COMMENTS/WORK ORDER # |
|---|---|---|---|---|
| Tank Farms C, D: Tanks 121-124, 113, 132, 136, 211-222 (Tank Farm D will change with future improvements) | | | | |
| General housekeeping (no loose materials, trash, PPE, spill residues, tools, equipment, supplies, etc.) | D | OK | | |
| Containment Area (No evidence of leaks, cracks, gaps, damage) | D | OK | | |
| No standing liquids in containment (unless w/in 24 hrs of rainstorm) | D | OK | | Note time rain ended: |
| Condition of tanks (no leaks or excessive corrosion) | D | OK | | |
| Level indicators operating | D | OK | | |
| Valves closed and capped when not in use | D | OK | | |
| Sampling valves closed and capped | D | OK | | |
| Flanges, other connections not leaking | D | OK | | |
| Pumps not leaking | D | OK | | |

| Tank Farm E,F: 410-403, 411-413, 301-303, 311-313, 321-323 | | | | |
|---|---|---|---|---|
| General housekeeping (no loose materials, trash, PPE, spill residues, tools, equipment, supplies, etc.) | D | N/A | | |
| Containment Area (No evidence of leaks, cracks, gaps, damage) | D | | | |
| No standing liquids in containment (unless w/in 24 hrs of rainstorm) | D | | | Note time rain ended: |
| Condition of tanks (no leaks or excessive corrosion) | D | | | |
| Level indicators operating | D | | | |
| Valves closed and capped when not in use | D | | | |
| Flanges, other connections not leaking | D | | | |
| Pumps not leaking | D | | | |

| Printed Name: | Date/Time: |
|---|---|
| Signature | |

❑ Check here if additional sheets are attached.

| ITEM/AREA | FREQ | ACCEPTABLE YES | ACCEPTABLE NO | COMMENTS/WORK ORDER # |
|---|---|---|---|---|
| **Railspur Area: Storm Water Tank, Rail cars in Containment** | | | | |
| General housekeeping (no loose materials, trash, PPE, spill residues, tools, equipment, supplies, etc.) | D | OK | | |
| Containment Area (No evidence of leaks, cracks, gaps, damage) | D | OK | | |
| No standing liquids in containment (unless w/in 24 hrs of rainstorm) | D | OK | | Note time rain ended: |
| Condition of tanks & rail cars (no leaks or excessive corrosion) | D | OK | | |
| Level indicators operating | D | OK | | |
| Valves not leaking, closed and capped when not in use | D | OK | | |
| Flanges, other connections not leaking | D | OK | | |
| Pumps not leaking | D | OK | | |
| **Canopy area** | | | | |
| General housekeeping (no loose materials, trash, PPE, spill residues, tools, equipment, supplies, etc.) | D | OK | | |
| Containment Area (No evidence of leaks, cracks, gaps, damage) | D | OK | | |
| No standing liquids in containment (unless w/in 24 hrs of rainstorm) | D | OK | | Note time rain ended: |
| Pumps not leaking | D | OK | | |

| | |
|---|---|
| Printed Name: | Date/Time: |
| Signature | |



Rev. 5/14/04

ROMIC RCRA INSPECTION FORM

PRODUCTION

❑ Check here if additional sheets are attached.

| ITEM/AREA | FREQ | ACCEPTABLE YES | ACCEPTABLE NO | COMMENTS/WORK ORDER # |
|---|---|---|---|---|
| Non-Hazardous Waste Tank Farm, Cooling Towers [not part of required RCRA Inspection] | | | | |
| General housekeeping (no loose materials, trash, PPE, spill residues, tools, equipment, supplies, etc.) | D | OK | | |
| Containment Area (No evidence of leaks, cracks, gaps, damage) | D | OK | | |
| No standing liquids in containment (unless w/in 24 hrs of rainstorm) | D | | ✓ | Note time rain ended: There is water in cont. area |
| Condition of tanks (no leaks or excessive corrosion) | D | OK | | |
| Level indicators operating | D | OK | | |
| Valves not leaking, closed and capped when not in use | D | OK | | |
| Flanges, other connections not leaking | D | OK | | |
| Pumps not leaking | D | OK | | |

| Production Area: Columns, Thin Filmers, Vac Pots | | | | |
|---|---|---|---|---|
| General housekeeping (no loose materials, trash, PPE, spill residues, tools, equipment, supplies, etc.) | D | OK | | |
| Containment Area (No evidence of leaks, cracks, gaps, damage) | D | OK | | |
| No standing liquids in containment (unless w/in 24 hrs of rainstorm) | D | OK | | Note time rain ended: |
| Monitoring Equip (pressure gauges, level indicators) | D | OK | | |
| Condition of process units (no leaks or excessive corrosion) | D | OK | | |
| Condition of tanks (no leaks or excessive corrosion) | D | OK | | |
| Valves not leaking, closed and capped when not in use | D | OK | | |
| Flanges, other connections not leaking | D | OK | | |
| Pumps not leaking | D | OK | | |
| Alarm/Control panels functioning properly | D | OK | | |

Printed Name: Joseph H. Gonzalez

Date/Time: 2100 12/20/04

Signature: Joe H. Gonzalez

Rev. 5/14/04

**ROMIC RCRA INSPECTION FORM**

Date: 17DEC04

| | |
|---|---|
| Pages 2 to 2 General Facility | Supervisor Signature: _____ |
| Pages 3 to 6 Production | Supervisor Signature: _____ |
| Pages 7 to 8 Warehouse | Supervisor Signature: _____ |
| Pages 9 to 9 Field Services | Supervisor Signature: _____ |

Frequency (FREQ) Codes:

| | | |
|---|---|---|
| D | = | Daily |
| W | = | Weekly, on Tuesdays |
| M | = | Monthly, during second week of the month |
| S | = | Semi Annually, during April and October |
| Y | = | Yearly, during October |

General Instructions:

Complete and compile full package daily.

Sean Murphy 1331

**ROMIC RCRA INSPECTION FORM**

**WAREHOUSE**

o Check here if additional sheets are attached.

| ITEM/AREA | FREQ | ACCEPTABLE YES | ACCEPTABLE NO | COMMENTS/WORK ORDER # |
|---|---|---|---|---|
| Sampling Area (in Building 1) | | | | |
| Containment Area (No evidence of leaks, cracks, gaps, damage) | W | | ✓ | NEEDS NEW FLOOR COATING |
| No spill residues or liquids on floor | W | ✓ | | |
| Aisle spacing adequate, in accordance with permit | W | ✓ | | |
| Containers stacked properly, within the lines | W | ✓ | | |
| Containers properly closed, ring tops secured, unless sampling | W | ✓ | | |
| Container condition (no leakers, bulgers, damaged drums) | W | ✓ | | |
| Container labeling (no labels missing, or damaged or torn so they are illegible) | W | ✓ | | |
| Incompatibles segregated | W | ✓ | | |

| | | | | |
|---|---|---|---|---|
| Warehouse #1 (Building 1) | | | | |
| Containment Area (No evidence of leaks, cracks, gaps, damage) | W | | ✓ | NEEDS NEW FLOOR COATING |
| No spill residues or liquids on floor | W | ✓ | | |
| Aisle spacing adequate, in accordance with permit | W | ✓ | | |
| Containers stacked properly, within the lines; no leaners; within height limit | W | ✓ | | |
| Containers properly closed, ring tops secured | W | ✓ | | |
| Container condition (no leakers, bulgers, damaged drums) | W | ✓ | | |
| Container labeling (no labels missing, or damaged or torn so they are illegible) | W | ✓ | | |
| No ignitables/reactives within the 50-ft. line. | W | ✓ | | |
| Incompatibles segregated | W | ✓ | | |
| Warehouse #2 (Building 2) | | | | |
| Containment Area (No evidence of leaks, cracks, | W | ✓ | | |

Revised 5/14/2004

**ROMIC RCRA INSPECTION FORM** **WAREHOUSE**

o Check here if additional sheets are attached.

| ITEM/AREA | FREQ | ACCEPTABLE YES | ACCEPTABLE NO | COMMENTS/WORK ORDER # |
|---|---|---|---|---|
| gaps, damage) | | | | |
| No spill residues or liquids on floor | W | | | |
| Aisle spacing adequate, in accordance with permit | W | | | |
| Containers stacked properly, within the lines; no leaners; within height limit | W | | | |
| Containers properly closed, ring tops secured | W | | | |
| Container condition (no leakers, bulgers, damaged drums) | W | | | |
| Container labeling (no labels missing, damaged or torn so they are illegible) | W | | | |
| No ignitables/reactives within the 50-ft. line. | W | | | |
| Incompatibles segregated | W | | | |

| West Bay Processing Area | | | | |
|---|---|---|---|---|
| Containment Area (No evidence of leaks, cracks, gaps, damage) | W | | | NEEDS NEW FLOOR COATING |
| No spill residues or liquids on floor | W | | | |
| Aisle spacing adequate, in accordance with permit | W | | | |
| Containers stacked properly, within the lines | W | | | |
| Containers properly closed, ring tops secured, unless sampling | W | | | |
| Container condition (no leakers, bulgers, damaged drums) | W | | | |
| Container labeling (no labels missing, damaged or torn so they are illegible) | W | | | |

**ROMIC RCRA INSPECTION FORM**

**FIELD SERVICES**

o Check here if additional sheets are attached.

| ITEM/AREA | FREQ | ACCEPTABLE YES | ACCEPTABLE NO | COMMENTS/WORK ORDER # |
|---|---|---|---|---|
| East Bay Processing Area | | | | |
| Containment Area (No evidence of leaks, cracks, gaps, damage) | W | | ✓ | NEEDS NEW FLOOR COATING |
| No spill residues or liquids on floor | W | ✓ | | |
| Aisle spacing adequate, in accordance with permit | W | ✓ | | |
| Containers stacked properly, within the lines | W | ✓ | | |
| Containers properly closed, ring tops secured, unless sampling | W | ✓ | | |
| Container condition (no leakers, bulgers, damaged drums) | W | ✓ | | |
| Container labeling (no labels missing, damaged or torn so they are illegible) | W | ✓ | | |

# Weekly Facility Inspection Sheet

11/29 inspected by Mucki & Secw

| Item | DATE | Area | Dept. | Corrective Action Required | Initials of person making corrections | Date Item Corrected |
|---|---|---|---|---|---|---|
| 1 | 11/29 | ROW 36 | OPS | CORROSIVE STORED OVER FLAM | JI | 11-29-04 |
| 2 | 11/29 | ROW 41 | OPS | SMALL DF WITH HOLE IN SIDE | JI | 11-29-04 |
| 3 | 11/29 | ROW 43 | OPS | WHITE 55 GL METAL DAMAGED | JI & CE | 11-29-04 |
| 4 | 11/29 | ROW 43 | OPS | " " " " DAMAGED | JI & CE | 11-29-04 |
| 5 | 11/29 | ROW 52 | OPS | BLUE POLY RING NOT SECURED | JI | 11-29-04 |
| 6 | | | | | | |
| 7 | | | | | | |
| 8 | | | | | | |
| 9 | | | | | | |
| 10 | | | | | | |
| 11 | | | | | | |
| 12 | | | | | | |
| 13 | | | | | | |
| 14 | | | | | | |
| 15 | | | | | | |
| 16 | | | | | | |
| 16 | | | | | | |
| 17 | | | | | | |
| 18 | | | | | | |
| 19 | | | | | | |
| 20 | | | | | | |
| 21 | | | | | | |
| 22 | | | | | | |
| 23 | | | | | | |
| 24 | | | | | | |
| 25 | | | | | | |
| 26 | | | | | | |
| 27 | | | | | | |
| 28 | | | | | | |

The person making the corrections must initial and date each individual line item listed above. These items need to be fixed or a workorder must be submitted within 24 hours. Please return this report to the EHS department.

EHS Department Reviewer Signature: _____ Date: _____

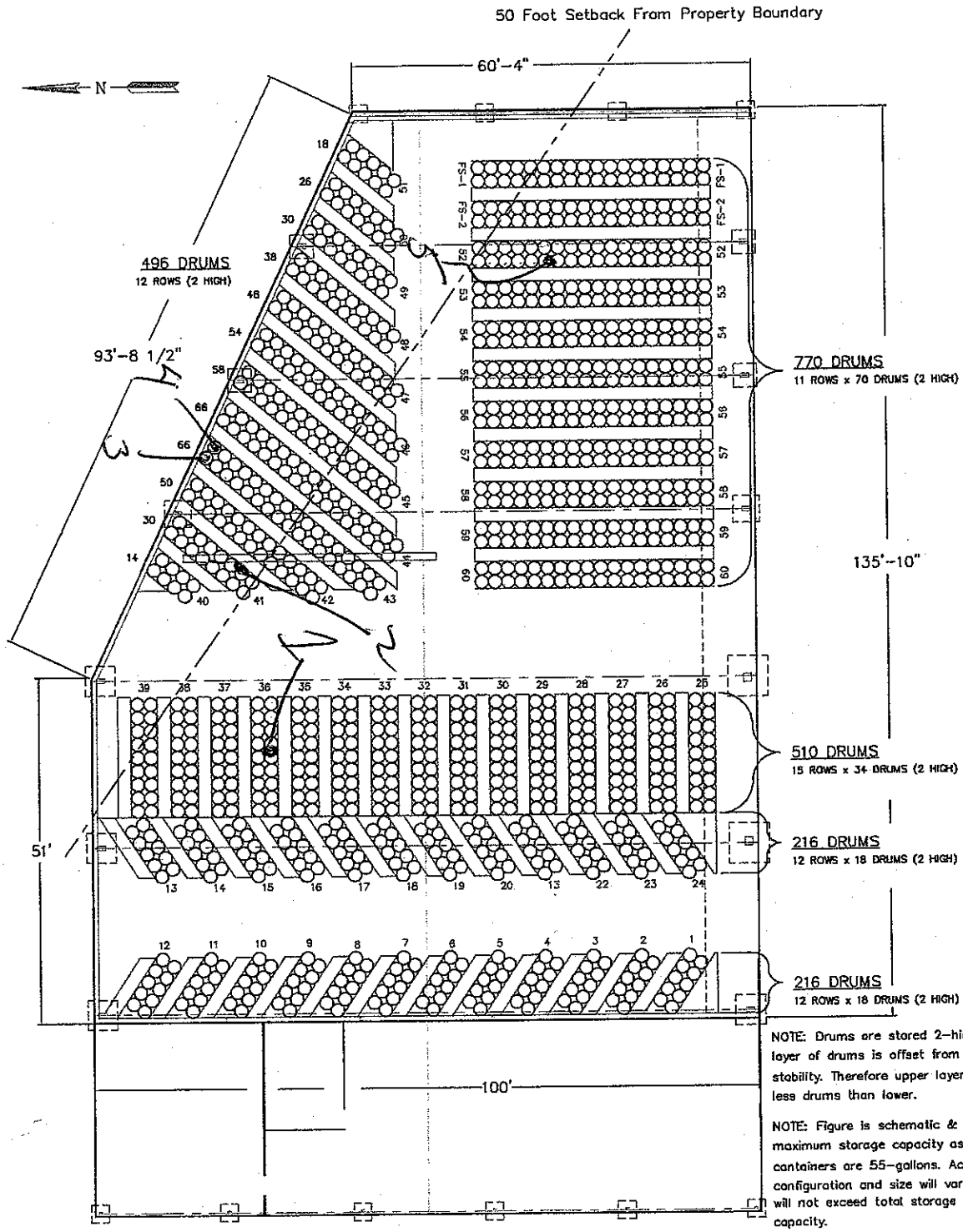


NOTE: Drums are stored 2-high. Upper layer of drums is offset from lower for stability. Therefore upper layer has two less drums than lower.

NOTE: Figure is schematic & shows maximum storage capacity assuming all containers are 55-gallons. Actual configuration and size will vary but will not exceed total storage capacity.

| REV | DATE | REVISION | APP |
|---|---|---|---|
| 2 | 10/04 | Change dims to FS-1, FS-2 | MT |
| 1 | 3/04 | Various revisions | MT |

DRAWN BY: ROBERT T. FIGUEROA

ROMIC
ENVIRONMENTAL TECHNOLOGIES
ENGINEERING DEPARTMENT

ROMIC - SOUTHWEST
CHANDLER, ARIZONA
DRUM STORAGE
BUILDING 1

DATE: 12-05-02
SCALE: NONE

D-2

I:raw_partb_04_final\drumstorage\fig_d2

# MONTHLY INSPECTIONS

# SIGN OFF SHEET

Month: DECEMBER 04

| Type of the Inspection | COMPLETED |
|---|---|
| Emergency Shower and Eyewash | ☑ |
| Emergency Spill Kit Inspection | ☑ |
| Fire Extinguisher | ☑ |
| SCBA | ☑ |
| Monthly RCRA | ☑ |

Verified by EH&S Manager: Nicki Schultz Date: Dec. 22, 2004

# EMERGENCY SHOWER AND EYEWASH MONTHLY INSPECTIONS

Inspector: SEAN P MURRAY

Date: 16-DEC04 Time: 1636

| | Equipment Location | Equipment Present | Evaluation | Comments |
|---|---|---|---|---|
| 1 | Lab | Eyewash/Shower | Pass Fail | |
| 2 | Distillation Area | Eyewash | Pass Fail | |
| 3 | West Processing Bay | Eyewash/Shower | Pass Fail | |
| 4 | Whse1 South Wall | Eyewash/Shower | Pass Fail | |
| 5 | Whse1 East Wall | Eyewash/Shower | Pass Fail | |
| 6 | Plant Maintenance | Eyewash | Pass Fail | |
| 7 | Whse1 Canopy North | Eyewash/Shower | Pass Fail | |
| 8 | East Processing Bay | Eyewash/Shower | Pass Fail | |
| 9 | Whse2 Canopy | Eyewash/Shower | Pass Fail | |
| 10 | Whse2 North Wall | Eyewash/Shower | Pass Fail | |
| 11 | | | Pass Fail | |
| 12 | | | Pass Fail | |
| 13 | | | Pass Fail | |
| 14 | | | Pass Fail | |
| 15 | | | Pass Fail | |
| 16 | | | Pass Fail | |
| 17 | | | Pass Fail | |
| 18 | | | Pass Fail | |
| 19 | | | Pass Fail | |
| 20 | | | Pass Fail | |

Corrections:

INSPECTION CERTIFIED BY: Micki Schultz DATE: 12/22/04

# SCOTT SCBA MONTHLY INSPECTION CHECKLIST

**An answer of NO to any of the following questions requires the unit must be removed from service.**

| Bottle # | 1 | 2 | 3 | 4 | 5 | 6 | 7 | 8 |
|---|---|---|---|---|---|---|---|---|
| Regulator # | 29110594 | 29300573 | 9210604 | 29300567 | N/A | N/A | N/A | N/A |
| Case # | 1 | 2 | 3 | 4 | N/A | N/A | N/A | N/A |
| Is the equipment complete( bottle, harness, inspection tag)? | ✓ | ✓ | ✓ | ✓ | ✓ | ✓ | ✓ | ✓ |
| Is the cylinder full? (Needle on yellow full mark.) | ✓ | ✓ | ✓ | ✓ | ✓ | ✓ | ✓ | ✓ |
| Is the date on the regulator within the last year? Note date. | Date_03-04_ | Date_03-04_ | Date_03-04_ | Date_03-04_ | N/A | N/A | N/A | N/A |
| Has the bottle been hydrotested within the last five years? Note date. | Date_06-02_ | Date_06-02_ | Date_06-02_ | Date ~~12-09~~ 12/04 | Date_06-02_ | Date_05-02_ | Date_06-02_ | Date_06-02_ |
| Are the face-piece, head straps, breathing tube, and exhalation valve in good condition? | N/A | N/A | N/A | N/A | N/A | N/A | N/A | N/A |
| Is the condition of the harness satisfactory? | ✓ | ✓ | ✓ | ✓ | N/A | N/A | N/A | N/A |
| Are the straps on the harness fully extended? | ✓ | ✓ | ✓ | ✓ | N/A | N/A | N/A | N/A |
| Have you initialed the inspection tag ? | ✓ | ✓ | ✓ | ✓ | N/A | N/A | N/A | N/A |

INSPECTED BY: Sean P Murphy DATE: 16 DEC 04

CERTIFIED BY: Micki Schultz DATE: 12/22/04



H:\Work\Enviro\Programs\Inspectn\5mininsp

# FIRE EXTINGUISHERS

| CYLINDER SIZE | CLASS Type | LOCATION | "CHECK" IF "OK" | NEEDS A SEAL? | REMARKS |
|---|---|---|---|---|---|
| 5 | ABC | Field Services/Safety | | | |
| 5 | ABC | Operations Trailer | | | |
| 10 | ABC | Operations Office | | | |
| 10 | ABC | Lunchroom North | | | |
| 10 | ABC | Lunchroom South | | | |
| 5 | ABC | Clean Changing Room | | | |
| 5 | ABC | Contaminated Changing room | | | |
| 5 | ABC | Lab Reception | | | |
| 10 | ABC | Lab East exit | | | |
| 10 | ABC | Lab West Exit | | | |
| 10 | Halon | Lab By Office | | | |
| 10 | ABC | Acid Test Room | | | |
| 15 | ABC | By Air Compressor | | | |
| 15 | ABC | Outside Distillation Boiler | | | |
| 15 | PKP | By tank 200 | | | |
| 15 | ABC | West Processing Bay | | | |
| 250 | PKP | By Tank 121 | | | |
| *** | AFFF/PKP | By Tank 122 | | | |
| 5 | ABC | TM on Mac Tool Chest | | | |
| 10 | ABC | TM West Wall | | | |
| 10 | ABC | TM Between Roll-up doors | | | |
| 10 | ABC | PM West Exit | | | |
| 5 | ABC | PM Hot Work Equip | | | To be mounted |
| 5 | ABC | PM Hot Work Equip | | | To be mounted |
| 5 | ABC | PM Hot Work Equip | | | To be mounted |
| 5 | ABC | PM Hot Work Equip | | | To be mounted |
| 5 | ABC | PM Hot Work Equip | | | To be mounted |
| 20 | ABC | Whse1 West Wall | | | |
| 20 | ABC | Whse1 Inside 1st Roof Support | | | |
| 20 | ABC | Whse1 Outside 2nd Roof Support | | | |
| 20 | ABC | Whse1 Inside 3rd Roof Support | | | |
| 20 | PKP | Whse1 Outside 4th Roof Support | | | |
| 20 | ABC | Whse1 Inside 5th Roof Support | | | |
| 15 | ABC | Whse 1 East Wall | | | |
| *** | AFFF/PKP | By East Bay Retaining Wall | | | |
| 250 | PKP | By East Bay Retaining Wall | | | |
| 20 | ABC | East Processing Bay | | | |
| 20 | ABC | Whse2 Entry | | | |
| 10 | ABC | Whse 2 By Emergency Shower | | | |
| 5 | ABC | Admin Trailer Entry | | | |
| 5 | ABC | Admin Trailer Exit | | | |
| 5 | ABC | Finance Trailer Exit | | | |
| 5 | ABC | Transportation | | | |

Inspector: Sean Murphy

Date: 12/14/04

Time: _____ AM / PM

Additional Notations:

TM= Truck Maintenance

PM= Plant Maintenance

Received by Micki Schultz 12/22/04

## Monthly Spill Kit Inspection

Month: DECEMBER 04

Inspected by: SEAN MURPHY Date 12/04/04

Reviewed by: Micki Schultz 12/22/04

| Location | Type | Seal Intact? Yes | Seal Intact? No* | Spill dry full? Yes | Spill dry full? No** |
|---|---|---|---|---|---|
| Control Room Oils & Solvent | 95 Gal Overpack | ✓ | | N/A | N/A |
| Warehouse 1 Oils & Solvent | 95 Gal Overpack | ✓ | | N/A | N/A |
| Across from Poly Cutting area O&S | 95 Gal Overpack | ✓ | | N/A | N/A |
| East Bay Acid | 95 Gal Overpack | ✓ | | N/A | N/A |
| East Bay Base | 95 Gal Overpack | ✓ | | N/A | N/A |
| Warehouse 2 Acid | 95 Gal Overpack | ✓ | | N/A | N/A |
| Warehouse 2 Base | 95 Gal Overpack | ✓ | | N/A | N/A |
| Operations Mgr. Trailer | Drum of floor dry | N/A | N/A | ✓ | |
| Distillation Area | Drum of floor dry | N/A | N/A | ✓ | |
| West Bay Processing | Drum of floor dry | N/A | N/A | ✓ | |
| Tank 122 | Drum of floor dry | N/A | N/A | ✓ | |
| Warehouse 1 East | Drum of floor dry | N/A | N/A | ✓ | |
| Warehouse 1 Middle | Drum of floor dry | N/A | N/A | ✓ | |
| Warehouse 1 West | Drum of floor dry | N/A | N/A | ✓ | |
| East Bay Processing | Drum of floor dry | N/A | N/A | ✓ | |
| Rail Spur North | Drum of floor dry | N/A | N/A | ✓ | |
| Rail Spur Middle | Drum of floor dry | N/A | N/A | ✓ | |
| Rail Spur South | Drum of floor dry | N/A | N/A | ✓ | |
| Warehouse 2 North | Drum of floor dry | N/A | N/A | ✓ | |
| Warehouse 1 South | Drum of floor dry | N/A | N/A | ✓ | |

* If seal is not intact, inventory spill kit. Reorder necessary supplies, restock and reseal the spill kit.

** If floor drv is below ¾ full have it refilled

☐ Check here if additional sheets are attached.

| ITEM/AREA | FREQ | ACCEPTABLE YES | ACCEPTABLE NO | COMMENTS/WORK ORDER # |
|---|---|---|---|---|
| SITE SECURITY | | | | |
| Front gate operational | M | ✓ | | |
| Other gates locked securely | M | ✓ | | |
| Signs legible from 25 feet | M | ✓ | | |
| Fence (walk the perimeter, no gaps, breaks, broken strands of barbed wire) | S | ✓ | | 15 DEC04 |

| EMERGENCY EQUIPMENT (refer to emergency equipment locations map in Contingency Plan) | | | | |
|---|---|---|---|---|
| Emergency Showers and Eyewash Units (operating, sufficient flow) | M | ✓ | | |
| SCBA (adequate air supply/ pressure, mask condition) | M | | | |
| Telephone System (operating properly) | M | ✓ | | |
| ~~PA/Intercom System~~ RADIO (operating properly) | M | ✓ | | |
| Fire extinguishers (fully charged, seal intact) | M | ✓ | | |
| Fire hoses (in good condition, no tears or damage) | M | ✓ | | |
| Evacuation Notice Alarm (operating properly) | M | ✓ | | CHANGED OUT CANS |
| Fire Hydrants (Clear access, no obstruction) | M | ✓ | | |

| SAFETY SUPPLIES | | | | |
|---|---|---|---|---|
| First aid kits (adequate supply, condition) | M | ✓ | | FILLED 12-14-04 |
| Absorbent (adequate supply—50 bags min.) | M | ✓ | | |
| Overpack Drums (adequate supply—20 min.) | M | ✓ | | |
| PPE (adequate supply, condition) | M | ✓ | | |
| Respirator cartridges (adequate supply, end-of-service-life indicator ok) | M | ✓ | | |

| | |
|---|---|
| Printed Name: SEAN P MURPHY | Date/Time: 15 DEC04 |
| Signature | |



Reviewed by Micki Schultz 12/22/04

**Temperature Readings**

From main screen press the F3 key to get to the Temperature Display, then record the following temperatures:

Condenser #1: ___-13____ °C

Condenser #2: __ 5_____ °C

Separator #1: ___9_____ °C

Separator #2: ___35_____ °C

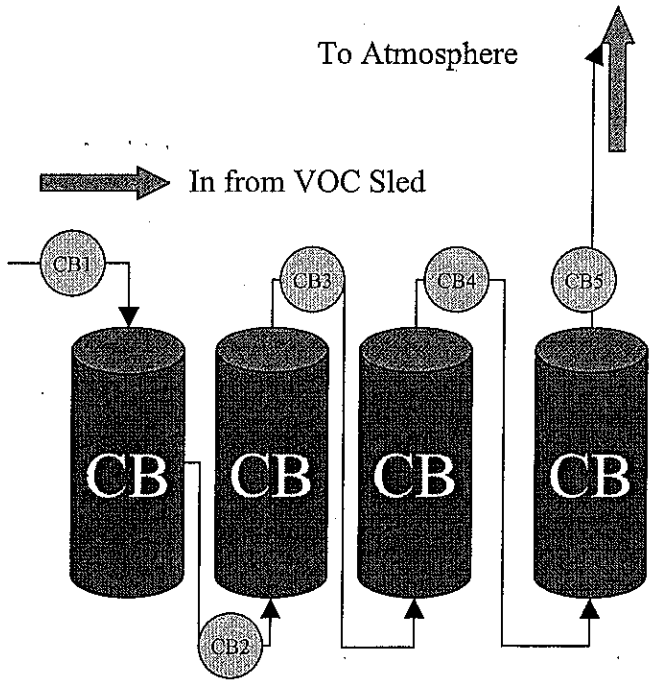


Tester Initials:SPM Date/Time: 12-22-04 0918

| | | | | | |
|---|---|---|---|---|---|
| **Background:** | 0.0 | ppm | **CB1(Pre):** | 2106 | ppm |
| | | | **CB2(Mid):** | 228.7 | ppm |
| **Carbon Changeout Levels:** | | | **CB3(Mid):** | 0.0 | ppm |
| **MAX: 25 ppm over background** | | | **CB4:(Mid):** | 0.0 | ppm |
| **MAX: Background** | | | **CB5:(Post):** | 0.0 | ppm |

**NOTE:** If readings at CB4 reads greater than **25 ppm** complete Maintenance request form for carbon change out within 24 hours. Move Beds 3 and 4 to slots 1 and 2, install fresh carbon in slots 3 and 4.

If readings at CB5 reads greater than **background**, shut down processes as soon as safely possible, complete Work Order to change out all four carbon beds **prior to process restart**.

Notify Eric Fuller of any readings requiring carbon changeout as soon as practical.

# Ensure vapors are being directed to the carbon beds when taking these readings

**Procedures:**

1. Find VOC Skid Control Panel.
2. Press the F1 key.
3. Ensure the VOC exhaust is routed to the Carbon Bed.
4. If icon is green and reads ATMOS, press icon to switch to Carbon Bed.
5. Wait 15 minutes before proceeding with the readings.

**CB1 (before carbon beds)**

1. Record Background
2. Locate Sample Port CB1(Marked in yellow)
3. Remove plug slowly to ensure positive flow
4. Place FID adjacent to sample port
5. Allow reading to stabilize
6. Record reading on Monitoring form
7. Replace sample plug
8. Go to sample port CB2

**CB2 (between Carbon Bed 1 and Carbon Bed 2):**

1. Locate Sample Port CB2 (Marked in yellow)
2. Remove plug slowly to ensure positive flow
3. Place FID adjacent to sample port
4. Allow reading to stabilize
5. Record reading on Monitoring form
6. Replace sample plug
7. Go to sample port CB3

**CB3 (between Carbon Bed 2 and Carbon Bed 3):**

1. Locate Sample Port CB3 (Marked in yellow)
2. Repeat the steps used for CB2

**CB4 (between Carbon Bed 3 and Carbon Bed 4):**

1. Locate Sample Port CB4 (Marked in Yellow)
2. Repeat the steps used for CB2

**CB5 (after Carbon Bed 4):**

1. Place FID adjacent to atmospheric vent (Marked in yellow)
2. Allow reading to stabilize
3. Record reading on Monitoring form

revised 7/21/04

# APPENDIX F-5

# VOC MONITORING PROTOCOL

Subparts AA and BB Inspection Spreadsheet

(See Separately Bound 11x17 Report)

US EPA ARCHIVE DOCUMENT

# Distillation Column Inspection

| | Distillation Collumn | | | Date monitored: 27 October 04 | Perchloroethylene/MCH | PID background reading | |
|---|---|---|---|---|---|---|---|
| **Label** | **COMPONENT/Line** | **Sequence #** | **Pipe Type** | **Description/Note** | **Equip Type** | **Organics** | **HW State** |
| T | REB/Vent | 1 | FL | Top of Reboiler Steam/Vent Outlet Tee | Flange | > 10 (w/w) | Gas/Vapor |
| T | REB/Vent | 2 | VALVE | Flanged Vent Valve | Valve | > 10 (w/w) | Gas/Vapor |
| T | REB/Vent | 3 | VALVE | Threaded Steam Valve | Valve | > 10 (w/w) | Gas/Vapor |
| T | REB/Vent | 4 | NIP | 2"L | Other connector | > 10 (w/w) | Gas/Vapor |
| T | REB/Vent | 5 | SQRF | | Other connector | > 10 (w/w) | Gas/Vapor |
| T | REB/Vent | 6 | Coupling | From top REB west side | Other connector | > 10 (w/w) | Gas/Vapor |
| T | REB/Vent | 7 | Pipe | 6"L | Other connector | > 10 (w/w) | Gas/Vapor |
| T | REB/Vent | 8 | TEE | | Other connector | > 10 (w/w) | Gas/Vapor |
| T | REB/Vent | 9 | FL | on valve | Flange | > 10 (w/w) | Gas/Vapor |
| T | REB/Vent | 10 | FL | | Flange | > 10 (w/w) | Gas/Vapor |
| P | REB | 1 | CAP | Top Reboiler | Flange | > 10 (w/w) | Light Liquid |
| P | REB | 2 | TC | Reboiler Vacuum Pressure Transmitter | Other connector | > 10 (w/w) | Light Liquid |
| P | REB | 3 | TC | Reboiler Level Transmitter | Other connector | > 10 (w/w) | Light Liquid |
| P | REB | 4 | TC | Reboiler Level Transmitter | Other connector | > 10 (w/w) | Light Liquid |
| P | REB | 5 | Pipe | Top of LT from REB | Other connector | > 10 (w/w) | Light Liquid |
| P | REB | 6 | Pipe | Bottom of LT from REB | Other connector | > 10 (w/w) | Light Liquid |
| P | REB | 7 | LT | Level Transmitter | Other connector | > 10 (w/w) | Light Liquid |
| R | REB/Sample | 1 | FL | Sample Outlet on East Side | Flange | > 10 (w/w) | Light Liquid |
| R | REB/Sample | 2 | NIP | Between valve and FL | Other connector | > 10 (w/w) | Light Liquid |
| R | REB/Sample | 3 | VALVE | Sample | Valve in light liquid service | > 10 (w/w) | Light Liquid |
| R | REB/Sample | 4 | NIP | 1" threaded | Other connector | > 10 (w/w) | Light Liquid |
| R | REB/Sample | 5 | 90 | | Other connector | > 10 (w/w) | Light Liquid |
| R | REB/Sample | 6 | Bushing | 1" x 1/4" | Other connector | > 10 (w/w) | Light Liquid |
| R | REB/Sample | 7 | NIP | 1" | Other connector | > 10 (w/w) | Light Liquid |
| R | REB/Sample | 8 | Pipe | 8"L | Other connector | > 10 (w/w) | Light Liquid |
| R | REB/Sample | 9 | Coupling | From REB east side | Other connector | > 10 (w/w) | Light Liquid |
| S | REB/Side | 1 | FL | Side Fill into Reboiler | Flange | > 10 (w/w) | Light Liquid |
| S | REB/Side | 2 | VALVE | Side Fill Valve to Reboiler | Open-ended valve or line | > 10 (w/w) | Light Liquid |
| S | REB/Side | 3 | FL | Cap to Valve S2 | Flange | > 10 (w/w) | Light Liquid |
| S | REB/Side | 4 | Pipe | From REB end, west side | Other connector | > 10 (w/w) | Light Liquid |

US EPA ARCHIVE DOCUMENT

# Distillation Column Inspection

| | Distillation Collumn | | | Date monitored: 27 October 04 | Perchloroethylene/MCH | PID background reading | |
|---|---|---|---|---|---|---|---|
| **Label** | **COMPONENT/Line** | **Sequence #** | **Pipe Type** | **Description/Note** | **Equip Type** | **Organics** | **HW State** |
| S | REB/Side | 5 | Reducer | 3" x 2 1/2" | Other connector | > 10 (w/w) | Light Liquid |
| S | REB/Side | 6 | NIP | Between FL S1 and tee | Other connector | > 10 (w/w) | Light Liquid |
| S | REB/Side | 7 | TEE | | Other connector | > 10 (w/w) | Light Liquid |
| S | REB/Side | 8 | FL | Top of valve S2 | Flange | > 10 (w/w) | Light Liquid |
| D | DC/Drain | 1 | FL | Bottom Drain Line Valve from Column | Flange | > 10 (w/w) | Light Liquid |
| D | DC/Drain | 2 | FL | Bottom Drain Line Valve from Column | Flange | > 10 (w/w) | Light Liquid |
| D | DC/Drain | 3 | VALVE | | Valve in light liquid service | > 10 (w/w) | Light Liquid |
| D | DC/Drain | 4 | Pipe | Bottom of DC to valve | Other connector | > 10 (w/w) | Light Liquid |
| D | DC/Drain | 5 | Pipe | Valve to tee | Other connector | > 10 (w/w) | Light Liquid |
| Q | REB/Bottom | 1 | FL | Bottom Fill/Drain | Flange | > 10 (w/w) | Light Liquid |
| Q | REB/Bottom | 2 | VALVE | Bottom Fill Flanged Valve | Valve in light liquid service | > 10 (w/w) | Light Liquid |
| Q | REB/Bottom | 3 | FL | Threaded | Flange | > 10 (w/w) | Light Liquid |
| Q | REB/Bottom | 4 | Reducer | 3" x 2" | Other connector | > 10 (w/w) | Light Liquid |
| Q | REB/Bottom | 5 | VALVE | Threaded | Open-ended valve or line | > 10 (w/w) | Light Liquid |
| Q | REB/Bottom | 6 | CAM | Camlock Fitting | Other connector | > 10 (w/w) | Light Liquid |
| Q | REB/Bottom | 7 | FL | Bottom of valve Q2 | Flange | > 10 (w/w) | Light Liquid |
| Q | REB/Bottom | 8 | Pipe | 3"OD from bottom of REB | Other connector | > 10 (w/w) | Light Liquid |
| Q | REB/Bottom | 9 | Pipe | From FL Q7, 90 and 8' pipe | Other connector | > 10 (w/w) | Light Liquid |
| V | REB-HE/Liquid | 1 | FL | 6" Bottom Flange | Flange | > 10 (w/w) | Light Liquid |
| V | REB-HE/Liquid | 2 | VALVE | Flanged Valve # 7 Before Pump | Valve in light liquid service | > 10 (w/w) | Light Liquid |
| V | REB-HE/Liquid | 3 | EX | Expansion Flex Joint Before Pump | Other connector | > 10 (w/w) | Light Liquid |
| V | REB-HE/Liquid | 4 | TC | Into Recirculating Pump | Other connector | > 10 (w/w) | Light Liquid |
| V | REB-HE/Liquid | 5 | P | Recirculation Pump | Pump in light liquid service | > 10 (w/w) | Light Liquid |
| V | REB-HE/Liquid | 6 | TC | Out of Recirculating Pump | Other connector | > 10 (w/w) | Light Liquid |
| V | REB-HE/Liquid | 7 | TC | Into Heat Exchanger | Other connector | > 10 (w/w) | Light Liquid |
| V | REB-HE/Liquid | 8 | TC | Into Heat Exchanger | Other connector | > 10 (w/w) | Light Liquid |
| V | REB-HE/Liquid | 9 | Pipe | From REB to FL V1 | Other connector | > 10 (w/w) | Light Liquid |
| V | REB-HE/Liquid | 10 | FL | valve | Flange | > 10 (w/w) | Light Liquid |
| V | REB-HE/Liquid | 11 | FL | top of EX | Flange | > 10 (w/w) | Light Liquid |
| V | REB-HE/Liquid | 12 | FL | Bottom of EX | Flange | > 10 (w/w) | Light Liquid |
| V | REB-HE/Liquid | 13 | 90 | Bottom FL V12 | Other connector | > 10 (w/w) | Light Liquid |

US EPA ARCHIVE DOCUMENT

# Distillation Column Inspection

| | Distillation Collumn | | | Date monitored: 27 October 04 | Perchloroethylene/MCH | PID background reading | |
|---|---|---|---|---|---|---|---|
| **Label** | **COMPONENT/Line** | **Sequence #** | **Pipe Type** | **Description/Note** | **Equip Type** | **Organics** | **HW State** |
| V | REB-HE/Liquid | 14 | Pipe | Coming out of pump going to HE | Other connector | > 10 (w/w) | Light Liquid |
| V | REB-HE/Liquid | 15 | Pipe | 2"OD from 90 V13 | Other connector | > 10 (w/w) | Light Liquid |
| V | REB-HE/Liquid | 16 | Valve | | Valve in light liquid service | > 10 (w/w) | Light Liquid |
| V | REB-HE/Liquid | 17 | CAM | | Other connector | > 10 (w/w) | Light Liquid |
| V | REB-HE/Liquid | 18 | Pipe | 1 1/2"L from CAM V17 | Other connector | > 10 (w/w) | Light Liquid |
| V | REB-HE/Liquid | 19 | 90 | | Other connector | > 10 (w/w) | Light Liquid |
| V | REB-HE/Liquid | 20 | CAM | | Other connector | > 10 (w/w) | Light Liquid |
| V | REB-HE/Liquid | 21 | CAP | | Other connector | > 10 (w/w) | Light Liquid |
| G | HE | 1 | CAP | TC on West End Cap | Other connector | > 10 (w/w) | Light Liquid |
| G | HE | 2 | FL | Heat Exchanger West End Cap Connection | Flange | > 10 (w/w) | Light Liquid |
| G | HE | 3 | FL | Heat Exchanger In/Out Section Connection, east e | Flange | > 10 (w/w) | Light Liquid |
| G | HE | 4 | FL | Heat Exchanger East End Cap Connection | Flange | > 10 (w/w) | Light Liquid |
| G | HE | 5 | CAP | 1" Plug on Top In/Out Section | Other connector | > 10 (w/w) | Light Liquid |
| H | HE/Drain 1 | 1 | FL | East, Heat Exchanger Bottom Drain 1 | Flange | > 10 (w/w) | Light Liquid |
| H | HE/Drain 1 | 2 | 90 | East | Other connector | > 10 (w/w) | Light Liquid |
| H | HE/Drain 1 | 3 | VALVE | East, Heat Exchanger Bottom Drain Valve | Valve in light liquid service | > 10 (w/w) | Light Liquid |
| H | HE/Drain 1 | 4 | NIP | East. 3" | Other connector | > 10 (w/w) | Light Liquid |
| H | HE/Drain 1 | 5 | CAM | East | Other connector | > 10 (w/w) | Light Liquid |
| H | HE/Drain 2 | 6 | Pipe | 6"OD, from HE to FL | Other connector | > 10 (w/w) | Light Liquid |
| I | HE/Drain 2 | 1 | 90 | 1" threaded pipe | Other connector | > 10 (w/w) | Light Liquid |
| I | HE/Drain 2 | 2 | VALVE | | Valve in light liquid service | > 10 (w/w) | Light Liquid |
| I | HE/Drain 2 | 3 | NIP | 4" | Other connector | > 10 (w/w) | Light Liquid |
| I | HE/Drain 2 | 4 | CAM | | Other connector | > 10 (w/w) | Light Liquid |
| I | HE/Drain 2 | 5 | Reducer | 1" x 2" Camlock | Other connector | > 10 (w/w) | Light Liquid |
| I | HE/Drain 2 | 6 | CAP | Camlock | Other connector | > 10 (w/w) | Light Liquid |
| I | HE/Drain 3 | 7 | Pipe | 2"OD from HE, east side | Other connector | > 10 (w/w) | Light Liquid |
| I | HE/Drain 4 | 8 | NIP | to 90 | Other connector | > 10 (w/w) | Light Liquid |
| I | HE/Drain 5 | 9 | NIP | 2"L threaded from 90 | Other connector | > 10 (w/w) | Light Liquid |
| J | HE-REB/Mix | 1 | FL | Heat Exchanger Outlet for Return Line to Reboiler | Flange | > 10 (w/w) | Light Liquid |
| J | HE-REB/Mix | 2 | EX | Heat Exchanger Flex Joint on Return Line to Reboi | Other connector | > 10 (w/w) | Light Liquid |
| J | HE-REB/Mix | 3 | TC | Heat Exchanger Line Into Reboiler | Other connector | > 10 (w/w) | Light Liquid |

US EPA ARCHIVE DOCUMENT

# Distillation Column Inspection

| | Distillation Collumn | | | Date monitored: 27 October 04 | Perchloroethylene/MCH | PID background reading | |
|---|---|---|---|---|---|---|---|
| **Label** | **COMPONENT/Line** | **Sequence #** | **Pipe Type** | **Description/Note** | **Equip Type** | **Organics** | **HW State** |
| U | REB-DC/Vapor | 1 | FL | Top of Reboiler | Flange | > 10 (w/w) | Gas/Vapor |
| U | REB-DC/Vapor | 2 | FL | Vapor Line Into Column | Flange | > 10 (w/w) | Gas/Vapor |
| F | DC-REB/Liquid Return | 1 | TC | Liquid Return Line from Column | Other connector | > 10 (w/w) | Light Liquid |
| F | DC-REB/Liquid Return | 2 | TC | Liquid Return Line Into Reboiler | Other connector | > 10 (w/w) | Light Liquid |
| C | DC | 1 | FL | Top of Column | Flange | > 10 (w/w) | Gas/Vapor |
| C | DC | 2 | TC | Vacuum Pressure Transmitter on Top of Column | Other connector | > 10 (w/w) | Gas/Vapor |
| C | DC | 3 | TC | Temperature Transmitter | Other connector | > 10 (w/w) | Light Liquid |
| C | DC | 4 | CAP | 8' above Roof (below top platform) facing SE | Other connector | > 10 (w/w) | Light Liquid |
| C | DC | 5 | CAP | 4' above Roof facing NE | Other connector | > 10 (w/w) | Light Liquid |
| C | DC | 6 | CAP | Just Above Roof facing SE | Other connector | > 10 (w/w) | Light Liquid |
| C | DC | 7 | CAP | Just Above Bottom on SE Side Directly Above Next | Other connector | > 10 (w/w) | Light Liquid |
| C | DC | 8 | CAP | Near Bottom on SE Side | Other connector | > 10 (w/w) | Light Liquid |
| C | DC | 9 | CAP | Near Bottom on SE Side | Other connector | > 10 (w/w) | Light Liquid |
| C | DC | 10 | FL | Blind Flange Near Bottom on West Side | Flange | > 10 (w/w) | Light Liquid |
| C | DC | 11 | FL | Base of Column | Flange | > 10 (w/w) | Light Liquid |
| E | DC-COND/Vapor | 1 | TC | Top of Column for Vapor to Condenser | Other connector | > 10 (w/w) | Gas/Vapor |
| E | DC-COND/Vapor | 2 | TC | Into Condenser | Other connector | > 10 (w/w) | Gas/Vapor |
| E | DC-COND/Vapor | 3 | FL | Into Condenser | Flange | > 10 (w/w) | Gas/Vapor |
| E | DC-COND/Vapor | 4 | TG | Temperature Guage on North Side | Other connector | > 10 (w/w) | Gas/Vapor |
| E | DC-COND/Vapor | 5 | VALVE | South Side of Inlet | Valve in gas/vapor service | > 10 (w/w) | Gas/Vapor |
| E | DC-COND/Vapor | 6 | FL | Valve E5 | Flange | > 10 (w/w) | Gas/Vapor |
| A | COND | 1 | FL | Condenser In End, west side | Flange | > 10 (w/w) | Light Liquid |
| A | COND | 2 | CAP | Plug on Top of Condenser In End Cap | Other connector | > 10 (w/w) | Light Liquid |
| A | COND | 3 | CAP | Plug on Bottom of Condenser In End Cap | Other connector | > 10 (w/w) | Light Liquid |
| A | COND | 4 | FL | Condenser Out End | Flange | > 10 (w/w) | Light Liquid |
| B | COND-SEP/Condensate | 1 | CAP | Plug on south side | Other connector | > 10 (w/w) | Light Liquid |
| B | COND-SEP/Condensate | 2 | FL | Out of Condenser, bottom east side | Flange | > 10 (w/w) | Light Liquid |

US EPA ARCHIVE DOCUMENT

# Distillation Column Inspection

| | Distillation Collumn | | | Date monitored: 27 October 04 | Perchloroethylene/MCH | PID background reading | |
|---|---|---|---|---|---|---|---|
| **Label** | **COMPONENT/Line** | **Sequence #** | **Pipe Type** | **Description/Note** | **Equip Type** | **Organics** | **HW State** |
| B | COND-SEP/Condensate | 3 | TC | Out of Condenser | Other connector | > 10 (w/w) | Light Liquid |
| B | COND-SEP/Condensate | 4 | TC | Line from Condenser to Separator | Other connector | > 10 (w/w) | Light Liquid |
| B | COND-SEP/Condensate | 5 | TC | Top of Separator | Other connector | > 10 (w/w) | Light Liquid |
| B | COND-SEP/Condensate | 6 | FL | Top of Separator for Submerged Fill | Flange | > 10 (w/w) | Light Liquid |
| B | COND-SEP/Condensate | 7 | Pipe | From bottom COND to FL, 8"OD | Other connector | > 10 (w/w) | Light Liquid |
| B | COND-SEP/Condensate | 8 | 90 | down-north | Other connector | > 10 (w/w) | Light Liquid |
| B | COND-SEP/Condensate | 9 | 90 | north-down | Other connector | > 10 (w/w) | Light Liquid |
| B | COND-SEP/Condensate | 10 | Reducer | Between 90 and TC | Other connector | > 10 (w/w) | Light Liquid |
| W | SEP | 1 | VPG | Vacuum Pressure Guage threaded into top of Sepa | Other connector | > 10 (w/w) | Light Liquid |
| W | SEP | 2 | SG | NW Side Top | Other connector | > 10 (w/w) | Light Liquid |
| W | SEP | 3 | SG | NW Side Middle | Other connector | > 10 (w/w) | Light Liquid |
| W | SEP | 4 | SG | NW Side Bottom | Other connector | > 10 (w/w) | Light Liquid |
| W | SEP | 5 | SG | SE Side Middle Top | Other connector | > 10 (w/w) | Light Liquid |
| W | SEP | 6 | SG | SE Side Middle Bottom | Other connector | > 10 (w/w) | Light Liquid |
| W | SEP | 7 | TC | Separator Level Transmitter, Top | Other connector | > 10 (w/w) | Light Liquid |
| W | SEP | 8 | TC | Separator Level Transmitter, Bottom | Other connector | > 10 (w/w) | Light Liquid |
| X | SEP/Bottom | 1 | FL | Bottom of Separator | Flange | > 10 (w/w) | Light Liquid |
| X | SEP/Bottom | 2 | Pipe | Flange to pipe welded to cross with 3 connections: 1 1/2" threaded pipe to start reflux line, 1" coupling to start drain line, and 1 1/2" flange to start product line | Other connector | > 10 (w/w) | Light Liquid |
| X | SEP/Bottom | 3 | Pipe | 2"OD to FL from bottom of SEP | Other connector | > 10 (w/w) | Light Liquid |
| X | SEP/Bottom | 4 | Cross | to product, to reflux, and to drain | Other connector | > 10 (w/w) | Light Liquid |

US EPA ARCHIVE DOCUMENT

# Distillation Column Inspection

| | Distillation Collumn | | | Date monitored: 27 October 04 | Perchloroethylene/MCH | PID background reading | |
|---|---|---|---|---|---|---|---|
| **Label** | **COMPONENT/Line** | **Sequence #** | **Pipe Type** | **Description/Note** | **Equip Type** | **Organics** | **HW State** |
| Y | SEP/Drain | 1 | NIP | 1" | Other connector | > 10 (w/w) | Light Liquid |
| Y | SEP/Drain | 2 | VALVE | | Valve in light liquid service | > 10 (w/w) | Light Liquid |
| Y | SEP/Drain | 3 | NIP | 4" | Other connector | > 10 (w/w) | Light Liquid |
| Y | SEP/Drain | 4 | VALVE | | Valve in light liquid service | > 10 (w/w) | Light Liquid |
| Y | SEP/Drain | 5 | NIP | 1/2" | Other connector | > 10 (w/w) | Light Liquid |
| Y | SEP/Drain | 6 | CAM | Camlock Fitting | Other connector | > 10 (w/w) | Light Liquid |
| Y | SEP/Drain | 7 | Coupling | from cross | Other connector | > 10 (w/w) | Light Liquid |
| Z | SEP/Side | 1 | Pipe | Side of Separator | Other connector | > 10 (w/w) | Light Liquid |
| Z | SEP/Side | 2 | FL | Threaded | Flange | > 10 (w/w) | Light Liquid |
| Z | SEP/Side | 3 | NIP | 2" | Other connector | > 10 (w/w) | Light Liquid |
| Z | SEP/Side | 4 | 90 | | Other connector | > 10 (w/w) | Light Liquid |
| Z | SEP/Side | 5 | NIP | 4" | Other connector | > 10 (w/w) | Light Liquid |
| Z | SEP/Side | 6 | VALVE | | Valve in light liquid service | > 10 (w/w) | Light Liquid |
| Z | SEP/Side | 7 | TP | 15" | Other connector | > 10 (w/w) | Light Liquid |
| Z | SEP/Side | 8 | 90 | | Other connector | > 10 (w/w) | Light Liquid |
| Z | SEP/Side | 9 | NIP | 2" | Other connector | > 10 (w/w) | Light Liquid |
| Z | SEP/Side | 10 | UNION | | Other connector | > 10 (w/w) | Light Liquid |
| Z | SEP/Side | 11 | TP | approximately 5 feet, connects into threaded tee i | Other connector | > 10 (w/w) | Light Liquid |
| AA | SEP-DC/Reflux | 1 | UNION | | Other connector | > 10 (w/w) | Light Liquid |
| AA | SEP-DC/Reflux | 2 | NIP | 2" | Other connector | > 10 (w/w) | Light Liquid |
| AA | SEP-DC/Reflux | 3 | VALVE | | Pump in light liquid service | > 10 (w/w) | Light Liquid |
| AA | SEP-DC/Reflux | 4 | NIP | 3" | Other connector | > 10 (w/w) | Light Liquid |
| AA | SEP-DC/Reflux | 5 | TEE | threaded, connects with side line | Other connector | > 10 (w/w) | Light Liquid |
| AA | SEP-DC/Reflux | 6 | NIP | 2" | Other connector | > 10 (w/w) | Light Liquid |
| AA | SEP-DC/Reflux | 7 | UNION | | Other connector | > 10 (w/w) | Light Liquid |
| AA | SEP-DC/Reflux | 8 | NIP | 2" | Other connector | > 10 (w/w) | Light Liquid |
| AA | SEP-DC/Reflux | 9 | P | Reflux Pump | Pump in light liquid service | > 10 (w/w) | Light Liquid |
| AA | SEP-DC/Reflux | 10 | FL | Into Flow/Density Transmitter | Flange | > 10 (w/w) | Light Liquid |
| AA | SEP-DC/Reflux | 11 | FL | Out of Flow/Density Transmitter | Flange | > 10 (w/w) | Light Liquid |
| AA | SEP-DC/Reflux | 12 | TC | Reflux Line into Column Top | Other connector | > 10 (w/w) | Light Liquid |
| AA | SEP-DC/Reflux | 13 | Pipe | 9"L from cross to reducer | Other connector | > 10 (w/w) | Light Liquid |

US EPA ARCHIVE DOCUMENT

# Distillation Column Inspection

| | Distillation Collumn | | | Date monitored: 27 October 04 | Perchloroethylene/MCH | PID background reading | |
|---|---|---|---|---|---|---|---|
| **Label** | **COMPONENT/Line** | **Sequence #** | **Pipe Type** | **Description/Note** | **Equip Type** | **Organics** | **HW State** |
| AA | SEP-DC/Reflux | 14 | Reducer | 2 1/2" x 2" | Other connector | > 10 (w/w) | Light Liquid |
| AB | SEP-PF1/Vapor | 1 | TC | Top of Separator | Other connector | > 10 (w/w) | Gas/Vapor |
| AB | SEP-PF1/Vapor | 2 | TC | P & F Condenser | Other connector | > 10 (w/w) | Gas/Vapor |
| AB | SEP-PF1/Vapor | 3 | TCT | Tri-Clamp to Thread Converter on Plate & Frame C | Other connector | > 10 (w/w) | Gas/Vapor |
| K | PF1/Out | 1 | TCT | Tri-Clamp to Thread Converter on Plate & Frame C | Other connector | > 10 (w/w) | Light Liquid |
| K | PF1/Out | 2 | TC | P & F Condenser | Other connector | > 10 (w/w) | Light Liquid |
| L | PF1-PF2/Vapor | 1 | TC | P & F Chilling Condenser | Other connector | > 10 (w/w) | Gas/Vapor |
| L | PF1-PF2/Vapor | 2 | TCT | Tri-Clamp to Thread Converter on Plate & Frame C | Other connector | > 10 (w/w) | Gas/Vapor |
| M | PF2/Out | 1 | TCT | Tri-Clamp to Thread Converter on Plate & Frame C | Other connector | > 10 (w/w) | Light Liquid |
| M | PF2/Out | 2 | TC | P & F Chilling Condenser | Other connector | > 10 (w/w) | Light Liquid |
| N | PF2-SEP/Condensate | 1 | TC | Top of Separator | Other connector | > 10 (w/w) | Light Liquid |
| N | PF2-SEP/Condensate | 2 | FL | Top of Separator for Submerged Fill | | > 10 (w/w) | Light Liquid |
| O | PF2-VAC/Vacuum | 1 | TC | Into Vacuum Pump | Other connector | > 10 (w/w) | Gas/Vapor |
| AC | SEP-PT/Product | 1 | FL | Flange welded to threaded pipe into Product Pump | Flange | > 10 (w/w) | Light Liquid |
| AC | SEP-PT/Product | 2 | P | Product Pump | Pump in light liquid service | > 10 (w/w) | Light Liquid |
| AC | SEP-PT/Product | 3 | NIP | 3" out of Product Pump | Other connector | > 10 (w/w) | Light Liquid |
| AC | SEP-PT/Product | 4 | 90 | | Other connector | > 10 (w/w) | Light Liquid |
| AC | SEP-PT/Product | 5 | TP | 14" | Other connector | > 10 (w/w) | Light Liquid |
| AC | SEP-PT/Product | 6 | FL | Between pump and valve | Flange | > 10 (w/w) | Light Liquid |
| AC | SEP-PT/Product | 7 | VALVE | | Pump in light liquid service | > 10 (w/w) | Light Liquid |
| AC | SEP-PT/Product | 8 | Multi | Flange welded to pipe to tee which is welded to pipe to product receivers and coupling for air connection for blowing line empty | Other connector | > 10 (w/w) | Light Liquid |
| AC | SEP-PT/Product | 9 | FL | | Flange | > 10 (w/w) | Light Liquid |
| AC | SEP-PT/Product | 10 | VALVE | Tank 105 | Valve in light liquid service | > 10 (w/w) | Light Liquid |
| AC | SEP-PT/Product | 11 | FL | Tank 105 | Flange | > 10 (w/w) | Light Liquid |
| AC | SEP-PT/Product | 12 | FL | | Flange | > 10 (w/w) | Light Liquid |
| AC | SEP-PT/Product | 13 | VALVE | East Trough | Valve in light liquid service | > 10 (w/w) | Light Liquid |
| AC | SEP-PT/Product | 14 | FL | Threaded | Flange | > 10 (w/w) | Light Liquid |

US EPA ARCHIVE DOCUMENT

# Distillation Column Inspection

| | Distillation Collumn | | | Date monitored: 27 October 04 | Perchloroethylene/MCH | PID background reading | |
|---|---|---|---|---|---|---|---|
| **Label** | **COMPONENT/Line** | **Sequence #** | **Pipe Type** | **Description/Note** | **Equip Type** | **Organics** | **HW State** |
| AC | SEP-PT/Product | 15 | TP | 6" | Other connector | > 10 (w/w) | Light Liquid |
| AC | SEP-PT/Product | 16 | CAM | Camlock | Other connector | > 10 (w/w) | Light Liquid |
| AC | SEP-PT/Product | 17 | FL | | Flange | > 10 (w/w) | Light Liquid |
| AC | SEP-PT/Product | 18 | VALVE | West Trough | Valve in light liquid service | > 10 (w/w) | Light Liquid |
| AC | SEP-PT/Product | 19 | FL | Threaded | Flange | > 10 (w/w) | Light Liquid |
| AC | SEP-PT/Product | 20 | TP | 6" | Other connector | > 10 (w/w) | Light Liquid |
| AC | SEP-PT/Product | 21 | CAM | Camlock | Other connector | > 10 (w/w) | Light Liquid |
| AC | SEP-PT/Product | 22 | Pipe | From cross, 4" | Other connector | > 10 (w/w) | Light Liquid |
| AC | SEP-PT/Product | 23 | Reducer | 2 1/2" x 2" | Other connector | > 10 (w/w) | Light Liquid |
| AC | SEP-PT/Product | 24 | Pipe | Between FL AC1 and pump | Other connector | > 10 (w/w) | Light Liquid |
| AD | SEP-PT/Air | 1 | NIP | East of REB, 1/2" | Other connector | > 10 (w/w) | Light Liquid |
| AD | SEP-PT/Air | 2 | VALVE | East of REB | Valve in light liquid service | > 10 (w/w) | Light Liquid |
| AD | SEP-PT/Air | 3 | Bushing | East of REB | Other connector | > 10 (w/w) | Light Liquid |
| AD | SEP-PT/Air | 4 | AF | East of REB, Air Fitting, can also be used for samp | Open-ended valve or line | > 10 (w/w) | Light Liquid |

US EPA ARCHIVE DOCUMENT

# Distillation Column Inspection

| : 0.0 | | | | | | |
|---|---|---|---|---|---|---|
| **Compliance Method** | **Comments** | **Leak? Y/N** | **PPM Reading** | **Work Order #** | **Retest Date** | **Leak Fixed?** |
| Monitor if evidence of leak | | | | | | |
| Monthly LDAR | | | | | | |
| Monthly LDAR | | | | | | |
| Monitor if evidence of leak | | | | | | |
| Monitor if evidence of leak | | | | | | |
| Monitor if evidence of leak | New | | | | | |
| Monitor if evidence of leak | New | | | | | |
| Monitor if evidence of leak | New | | | | | |
| Monitor if evidence of leak | New | | | | | |
| Monitor if evidence of leak | New, Missing other half | | | | | |
| Monitor if evidence of leak | | | | | | |
| Monitor if evidence of leak | | | | | | |
| Monitor if evidence of leak | | | | | | |
| Monitor if evidence of leak | | | | | | |
| Monitor if evidence of leak | New | | | | | |
| Monitor if evidence of leak | New | | | | | |
| Monitor if evidence of leak | New | | | | | |
| Monitor if evidence of leak | | | | | | |
| Monitor if evidence of leak | | | | | | |
| Monthly LDAR | | | | | | |
| Monitor if evidence of leak | | | | | | |
| Monitor if evidence of leak | | | | | | |
| Monitor if evidence of leak | | | | | | |
| Second valve or cap | Missing plug | | | | | |
| Monitor if evidence of leak | New | | | | | |
| Monitor if evidence of leak | New | | | | | |
| Monitor if evidence of leak | | | | | | |
| Second valve or cap | | | | | | |
| Monitor if evidence of leak | | | | | | |
| Monitor if evidence of leak | New | | | | | |

US EPA ARCHIVE DOCUMENT

# Distillation Column Inspection

| : 0.0 | | | | | | |
|---|---|---|---|---|---|---|
| **Compliance Method** | **Comments** | **Leak? Y/N** | **PPM Reading** | **Work Order #** | **Retest Date** | **Leak Fixed?** |
| Monitor if evidence of leak | New | | | | | |
| Monitor if evidence of leak | New | | | | | |
| Monitor if evidence of leak | New | | | | | |
| Monitor if evidence of leak | New | | | | | |
| Monitor if evidence of leak | | | | | | |
| Monitor if evidence of leak | | | | | | |
| Monthly LDAR | New | | | | | |
| Monitor if evidence of leak | New | | | | | |
| Monitor if evidence of leak | New | | | | | |
| Monitor if evidence of leak | | | | | | |
| Monitor if evidence of leak | | | | | | |
| Monitor if evidence of leak | | | | | | |
| Monitor if evidence of leak | | | | | | |
| Second valve or cap | | | | | | |
| Monitor if evidence of leak | | | | | | |
| Monitor if evidence of leak | New | | | | | |
| Monitor if evidence of leak | New | | | | | |
| Monitor if evidence of leak | New | | | | | |
| Monitor if evidence of leak | | | | | | |
| Monthly LDAR | | | | | | |
| Monitor if evidence of leak | | | | | | |
| Monitor if evidence of leak | | | | | | |
| Monthly LDAR | | | | | | |
| Monitor if evidence of leak | | | | | | |
| Monitor if evidence of leak | | | | | | |
| Monitor if evidence of leak | | | | | | |
| Monitor if evidence of leak | New | | | | | |
| Monitor if evidence of leak | New | | | | | |
| Monitor if evidence of leak | New | | | | | |
| Monitor if evidence of leak | New | | | | | |
| Monitor if evidence of leak | New | | | | | |

US EPA ARCHIVE DOCUMENT

# Distillation Column Inspection

| : 0.0 | | | | | | |
|---|---|---|---|---|---|---|
| Compliance Method | Comments | Leak? Y/N | PPM Reading | Work Order # | Retest Date | Leak Fixed? |
| Monitor if evidence of leak | New | | | | | |
| Monitor if evidence of leak | New | | | | | |
| Monthly LDAR | New | | | | | |
| Monitor if evidence of leak | New | | | | | |
| Monitor if evidence of leak | New | | | | | |
| Monitor if evidence of leak | New | | | | | |
| Monitor if evidence of leak | New | | | | | |
| Monitor if evidence of leak | New | | | | | |
| Monitor if evidence of leak | | | | | | |
| Monitor if evidence of leak | | | | | | |
| Monitor if evidence of leak | Missing cap | | | | | |
| Monitor if evidence of leak | Missing tag | | | | | |
| Monitor if evidence of leak | | | | | | |
| Monitor if evidence of leak | | | | | | |
| Monitor if evidence of leak | | | | | | |
| Monthly LDAR | | | | | | |
| Monitor if evidence of leak | | | | | | |
| Monitor if evidence of leak | | | | | | |
| Monitor if evidence of leak | New | | | | | |
| Monitor if evidence of leak | | | | | | |
| Monthly LDAR | | | | | | |
| Monitor if evidence of leak | | | | | | |
| Monitor if evidence of leak | | | | | | |
| Monitor if evidence of leak | | | | | | |
| Monitor if evidence of leak | | | | | | |
| Monitor if evidence of leak | New | | | | | |
| Monitor if evidence of leak | New | | | | | |
| Monitor if evidence of leak | New | | | | | |
| Monitor if evidence of leak | | | | | | |
| Monitor if evidence of leak | | | | | | |
| Monitor if evidence of leak | | | | | | |

US EPA ARCHIVE DOCUMENT

# Distillation Column Inspection

| : 0.0 | | | | | | |
|---|---|---|---|---|---|---|
| Compliance Method | Comments | Leak? Y/N | PPM Reading | Work Order # | Retest Date | Leak Fixed? |
| Monitor if evidence of leak | | | | | | |
| Monitor if evidence of leak | | | | | | |
| Monitor if evidence of leak | | Y | 9288 | 5051 | | |
| Monitor if evidence of leak | | | | | | |
| Monitor if evidence of leak | | | | | | |
| Monitor if evidence of leak | | | | | | |
| Monitor if evidence of leak | | | | | | |
| Monitor if evidence of leak | | | | | | |
| Monitor if evidence of leak | | | | | | |
| Monitor if evidence of leak | | | | | | |
| Monitor if evidence of leak | | | | | | |
| Monitor if evidence of leak | | | | | | |
| Monitor if evidence of leak | | | | | | |
| Monitor if evidence of leak | | | | | | |
| Monitor if evidence of leak | | | | | | |
| Monitor if evidence of leak | | | | | | |
| Monitor if evidence of leak | | | | | | |
| Monitor if evidence of leak | | | | | | |
| Monitor if evidence of leak | | | | | | |
| Monitor if evidence of leak | | | | | | |
| Monthly LDAR | Missing plug | | | | | |
| Monitor if evidence of leak | New | | | | | |
| Monitor if evidence of leak | | y | visual | 5051 | | |
| Monitor if evidence of leak | | | | | | |
| Monitor if evidence of leak | | | | | | |
| Monitor if evidence of leak | | | | | | |
| Monitor if evidence of leak | | | | | | |
| Monitor if evidence of leak | | | | | | |

US EPA ARCHIVE DOCUMENT

# Distillation Column Inspection

| : 0.0 | | | | | | |
|---|---|---|---|---|---|---|
| **Compliance Method** | **Comments** | **Leak? Y/N** | **PPM Reading** | **Work Order #** | **Retest Date** | **Leak Fixed?** |
| Monitor if evidence of leak | | | | | | |
| Monitor if evidence of leak | | | | | | |
| Monitor if evidence of leak | | | | | | |
| Monitor if evidence of leak | | | | | | |
| Monitor if evidence of leak | New | | | | | |
| Monitor if evidence of leak | New | | | | | |
| Monitor if evidence of leak | New | | | | | |
| Monitor if evidence of leak | New | | | | | |
| Monitor if evidence of leak | | | | | | |
| Monitor if evidence of leak | | | | | | |
| Monitor if evidence of leak | | | | | | |
| Monitor if evidence of leak | | | | | | |
| Monitor if evidence of leak | | | | | | |
| Monitor if evidence of leak | | | | | | |
| Monitor if evidence of leak | | | | | | |
| Monitor if evidence of leak | | | | | | |
| Monitor if evidence of leak | | | | | | |
| Monitor if evidence of leak | | | | | | |
| Monitor if evidence of leak | New | | | | | |
| Monitor if evidence of leak | New | | | | | |

US EPA ARCHIVE DOCUMENT

# Distillation Column Inspection

| : 0.0 | | | | | | |
|---|---|---|---|---|---|---|
| Compliance Method | Comments | Leak? Y/N | PPM Reading | Work Order # | Retest Date | Leak Fixed? |
| Monitor if evidence of leak | | | | | | |
| Monthly LDAR | | N | 287 | 5051 | | |
| Monitor if evidence of leak | | | | | | |
| Monthly LDAR | | | | | | |
| Monitor if evidence of leak | | | | | | |
| Second valve or cap | Missing plug | | | | | |
| Monitor if evidence of leak | New | | | | | |
| Monitor if evidence of leak | | | | | | |
| Monitor if evidence of leak | | | | | | |
| Monitor if evidence of leak | | | | | | |
| Monitor if evidence of leak | | | | | | |
| Monitor if evidence of leak | | | | | | |
| Monthly LDAR | | | | | | |
| Monitor if evidence of leak | | | | | | |
| Monitor if evidence of leak | | | | | | |
| Monitor if evidence of leak | | | | | | |
| Monitor if evidence of leak | | | | | | |
| Monitor if evidence of leak | | | | | | |
| Monitor if evidence of leak | | | | | | |
| Monitor if evidence of leak | | | | | | |
| Monthly LDAR | | | | | | |
| Monitor if evidence of leak | | | | | | |
| Monitor if evidence of leak | | y | 768 | 5051 | | |
| Monitor if evidence of leak | | | | | | |
| Monitor if evidence of leak | | | | | | |
| Monitor if evidence of leak | | | | | | |
| Monitor if evidence of leak | | | | | | |
| Monitor if evidence of leak | | | | | | |
| Monitor if evidence of leak | | | | | | |
| Monitor if evidence of leak | | | | | | |
| Monitor if evidence of leak | New | | | | | |

US EPA ARCHIVE DOCUMENT

# Distillation Column Inspection

| : 0.0 | | | | | | |
|---|---|---|---|---|---|---|
| **Compliance Method** | **Comments** | **Leak? Y/N** | **PPM Reading** | **Work Order #** | **Retest Date** | **Leak Fixed?** |
| Monitor if evidence of leak | New | | | | | |
| Monitor if evidence of leak | | | | | | |
| Monitor if evidence of leak | | | | | | |
| Monitor if evidence of leak | | | | | | |
| Monitor if evidence of leak | | | | | | |
| Monitor if evidence of leak | | | | | | |
| Monitor if evidence of leak | | Y | 567.4 | 5051 | | |
| Monitor if evidence of leak | | | | | | |
| Monitor if evidence of leak | | | | | | |
| Monitor if evidence of leak | | | | | | |
| Monitor if evidence of leak | | | | | | |
| Monitor if evidence of leak | | | | | | |
| Monitor if evidence of leak | | | | | | |
| Monitor if evidence of leak | | | | | | |
| Monitor if evidence of leak | | | | | | |
| Monthly LDAR | | | | | | |
| Monitor if evidence of leak | | | | | | |
| Monitor if evidence of leak | | | | | | |
| Monitor if evidence of leak | | | | | | |
| Monitor if evidence of leak | | | | | | |
| Monthly LDAR | | | | | | |
| Monitor if evidence of leak | | | | | | |
| Monitor if evidence of leak | | | | | | |
| Monthly LDAR | | | | | | |
| Monitor if evidence of leak | | | | | | |
| Monitor if evidence of leak | | | | | | |
| Monthly LDAR | | | | | | |
| Monitor if evidence of leak | | | | | | |

US EPA ARCHIVE DOCUMENT

# Distillation Column Inspection

| : 0.0 | | | | | | |
|---|---|---|---|---|---|---|
| **Compliance Method** | **Comments** | **Leak? Y/N** | **PPM Reading** | **Work Order #** | **Retest Date** | **Leak Fixed?** |
| Monitor if evidence of leak | | | | | | |
| Monitor if evidence of leak | | | | | | |
| Monitor if evidence of leak | | | | | | |
| Monthly LDAR | | | | | | |
| Monitor if evidence of leak | | | | | | |
| Monitor if evidence of leak | | | | | | |
| Monitor if evidence of leak | | | | | | |
| Monitor if evidence of leak | New | | | | | |
| Monitor if evidence of leak | New | | | | | |
| Monitor if evidence of leak | New | | | | | |
| Monitor if evidence of leak | | | | | | |
| Monthly LDAR | | | | | | |
| Monitor if evidence of leak | | | | | | |
| Second valve or cap | Missing plug | | | | | |

US EPA ARCHIVE DOCUMENT

# Thin Film Evaporator Inspection

| | Thin Filmer | | | Date monitored: 29 October 04 | Xylenes | PID backgro |
|---|---|---|---|---|---|---|
| **Label** | **COMPONENT/Line** | **Sequence #** | **Pipe Type** | **Description/Note** | **Equip Type** | **Organics** |
| N | TF/In | 1 | CAM | Camlock Fitting | Other connector | > 10 (w/w) |
| N | TF/In | 2 | FL | Threaded | Flange | > 10 (w/w) |
| N | TF/In | 3 | FL | Open End Valve | Open-ended valve or line | > 10 (w/w) |
| N | TF/In | 4 | Valve | between N2 and N3 | Valve in light liquid service | > 10 (w/w) |
| N | TF/In | 5 | FL | Tank 101 Connection | Flange | > 10 (w/w) |
| N | TF/In | 6 | FL | Valve from Tank 101 | Flange | > 10 (w/w) |
| N | TF/In | 7 | Valve | between N5 and N6 | Valve in light liquid service | > 10 (w/w) |
| N | TF/In | 8 | Multi | tee after N6, piping | Other connector | > 10 (w/w) |
| N | TF/In | 9 | FL | Threaded | Other connector | > 10 (w/w) |
| N | TF/In | 10 | TP | 6" | Other connector | > 10 (w/w) |
| N | TF/In | 11 | Strainer | | Other connector | > 10 (w/w) |
| N | TF/In | 12 | NIP | 3" | Other connector | > 10 (w/w) |
| N | TF/In | 13 | UNION | | Other connector | > 10 (w/w) |
| N | TF/In | 14 | NIP | 1" | Other Connector | > 10 (w/w) |
| N | TF/In | 15 | Tee | | Other Connector | > 10 (w/w) |
| N | TF/In | 16 | NIP | 1" | Other Connector | > 10 (w/w) |
| N | TF/In | 17 | VALVE | # 3a before Pump | Valve in light liquid service | > 10 (w/w) |
| N | TF/In | 18 | Bushing | 2" x 1 1/2" | Other Connector | > 10 (w/w) |
| N | TF/In | 19 | NIP | 4" | Other Connector | > 10 (w/w) |
| N | TF/In | 20 | UNION | | Other Connector | > 10 (w/w) |
| N | TF/In | 21 | NIP | 6" | Other Connector | > 10 (w/w) |
| N | TF/In | 22 | P | Diaphragm Air Pump | Pump in light liquid service | > 10 (w/w) |
| N | TF/In | 23 | NIP | 3" | Other Connector | > 10 (w/w) |
| N | TF/In | 24 | Bushing | 1 1/4" x 2" | Other Connector | > 10 (w/w) |
| N | TF/In | 25 | 90 | | Other Connector | > 10 (w/w) |
| N | TF/In | 26 | NIP | 3" | Other Connector | > 10 (w/w) |
| N | TF/In | 27 | UNION | | Other Connector | > 10 (w/w) |
| N | TF/In | 28 | NIP | 2" | Other Connector | > 10 (w/w) |
| N | TF/In | 29 | VALVE | # 3b after Pump | Valve in light liquid service | > 10 (w/w) |
| N | TF/In | 30 | TP | 8" | Other Connector | > 10 (w/w) |
| N | TF/In | 31 | Tee | | Other Connector | > 10 (w/w) |
| N | TF/In | 32 | NIP | 2" | Other Connector | > 10 (w/w) |
| N | TF/In | 33 | 45 | | Other Connector | > 10 (w/w) |

US EPA ARCHIVE DOCUMENT

# Thin Film Evaporator Inspection

| | Thin Filmer | | | Date monitored: 29 October 04 | Xylenes | PID backgro |
|---|---|---|---|---|---|---|
| **Label** | **COMPONENT/Line** | **Sequence #** | **Pipe Type** | **Description/Note** | **Equip Type** | **Organics** |
| N | TF/In | 34 | TP | 12" | Other Connector | > 10 (w/w) |
| N | TF/In | 35 | VALVE | # 3c | Valve in light liquid service | > 10 (w/w) |
| N | TF/In | 36 | NIP | 6" | Other Connector | > 10 (w/w) |
| N | TF/In | 37 | UNION | | Other Connector | > 10 (w/w) |
| N | TF/In | 38 | TP | 3' | Other Connector | > 10 (w/w) |
| N | TF/In | 39 | 45 | | Other Connector | > 10 (w/w) |
| N | TF/In | 40 | TP | 7' | Other Connector | > 10 (w/w) |
| N | TF/In | 41 | 90 | | Other Connector | > 10 (w/w) |
| N | TF/In | 42 | NIP | 5" | Other Connector | > 10 (w/w) |
| N | TF/In | 43 | FL | Threaded | Other Connector | > 10 (w/w) |
| N | TF/In | 44 | pipe | | Other connector | > 10 (w/w) |
| L | TF/In Bypass | 1 | NP | 5" | Other connector | > 10 (w/w) |
| L | TF/In Bypass | 2 | VALVE | Pump Bypass Valve # 3 | Valve in light liquid service | > 10 (w/w) |
| L | TF/In Bypass | 3 | TP | 7" | Other connector | > 10 (w/w) |
| O | TF | 1 | FL | Top Bearing Flange Connection | Flange | > 10 (w/w) |
| O | TF | 2 | FL | Top Flange Connection on Main Cylindrical Shell | Flange | > 10 (w/w) |
| O | TF | 3 | FL | Bottom Flange Connection on Main Cylindrical Shell | Flange | > 10 (w/w) |
| P | TF/Out | 1 | FL | Out | Flange | > 10 (w/w) |
| P | TF/Out | 2 | FL | Front Sight Glass | Flange | > 10 (w/w) |
| P | TF/Out | 3 | FL | Back Sight Glass | Flange | > 10 (w/w) |
| P | TF/Out | 4 | FL | Level Controller | Flange | > 10 (w/w) |
| P | TF/Out | 5 | FL | Threaded | Flange | > 10 (w/w) |
| P | TF/Out | 6 | NIP | 4" | Other connector | > 10 (w/w) |
| P | TF/Out | 7 | VALVE | | Valve in light liquid service | > 10 (w/w) |
| P | TF/Out | 8 | NIP | 5" | Other connector | > 10 (w/w) |
| P | TF/Out | 9 | Tee | | Other connector | > 10 (w/w) |
| P | TF/Out | 10 | CAM | Camlock | Other connector | > 10 (w/w) |
| P | TF/Out | 11 | P | Pump (not present) | | > 10 (w/w) |
| P | TF/Out | 12 | Bushing | 2" x 1/2" in side of Tee | Other connector | > 10 (w/w) |
| P | TF/Out | 13 | CAP | 1/2" Plug | Open-ended valve or line | > 10 (w/w) |
| Q | TF/Out Distribution | 1 | FL | Flex Joint Connection from Pump | Other connector | > 10 (w/w) |
| Q | TF/Out Distribution | 2 | VALVE | 1st Distribution Flanged Valve | Valve in light liquid service | > 10 (w/w) |
| Q | TF/Out Distribution | 3 | FL | On end of welded distribution pipe | Flange | > 10 (w/w) |

US EPA ARCHIVE DOCUMENT

# Thin Film Evaporator Inspection

| | Thin Filmer | | | Date monitored: 29 October 04 | Xylenes | PID backgro |
|---|---|---|---|---|---|---|
| **Label** | **COMPONENT/Line** | **Sequence #** | **Pipe Type** | **Description/Note** | **Equip Type** | **Organics** |
| Q | TF/Out Distribution | 4 | Bushing | 2" x 1/4"; 2" side welded into tee in distribution line | Other connector | > 10 (w/w) |
| Q | TF/Out Distribution | 5 | NIP | 4" length | Other connector | > 10 (w/w) |
| Q | TF/Out Distribution | 6 | VALVE | for Air | Valve in light liquid service | > 10 (w/w) |
| Q | TF/Out Distribution | 7 | AF | Air Fitting for Blowing Line | Open-ended valve or line | > 10 (w/w) |
| Q | TF/Out Distribution | 8 | FL | To Tank 101 | Flange | > 10 (w/w) |
| Q | TF/Out Distribution | 9 | VALVE | Valve to Tank 101 | Valve in light liquid service | > 10 (w/w) |
| Q | TF/Out Distribution | 10 | FL | Flange on end of welded pipe to Tank 101 | Flange | > 10 (w/w) |
| Q | TF/Out Distribution | 11 | FL | Into Tank 101 | Flange | > 10 (w/w) |
| Q | TF/Out Distribution | 12 | FL | To Flush Tank | Flange | > 10 (w/w) |
| Q | TF/Out Distribution | 13 | VALVE | Valve to Flush Tank | Valve in light liquid service | > 10 (w/w) |
| Q | TF/Out Distribution | 14 | Multi | FL, 2' pipe, 90, 7' pipe up threaded on end | Other connector | > 10 (w/w) |
| Q | TF/Out Distribution | 15 | 90 | | Other connector | > 10 (w/w) |
| Q | TF/Out Distribution | 16 | TP | 12" | Other connector | > 10 (w/w) |
| Q | TF/Out Distribution | 17 | 90 | | Other connector | > 10 (w/w) |
| Q | TF/Out Distribution | 18 | NIP | 2" | Other connector | > 10 (w/w) |
| Q | TF/Out Distribution | 19 | TP | Coupling Inlet on Top of FLUSH TANK | Other connector | > 10 (w/w) |
| Q | TF/Out Distribution | 20 | FL | To Trough | Flange | > 10 (w/w) |
| Q | TF/Out Distribution | 21 | VALVE | Valve to Trough | Valve in light liquid service | > 10 (w/w) |
| Q | TF/Out Distribution | 22 | FL | Threaded | Flange | > 10 (w/w) |
| Q | TF/Out Distribution | 23 | TP | 10' to East Trough | Other connector | > 10 (w/w) |
| Q | TF/Out Distribution | 24 | VALVE | | Valve in light liquid service | > 10 (w/w) |
| Q | TF/Out Distribution | 25 | NIP | 2" | Other connector | > 10 (w/w) |
| Q | TF/Out Distribution | 26 | 90 | Down | Other connector | > 10 (w/w) |
| Q | TF/Out Distribution | 27 | CAM | Camlock | Other connector | > 10 (w/w) |
| Q | TF/Out Distribution | 28 | FL | Connection to Line to Tank 105 | Flange | > 10 (w/w) |
| Q | TF/Out Distribution | 29 | FL | To Tank 105 | Flange | > 10 (w/w) |
| Q | TF/Out Distribution | 30 | VALVE | Valve to Tank 105 | Valve in light liquid service | > 10 (w/w) |
| Q | TF/Out Distribution | 31 | FL | On Tank 105 | Flange | > 10 (w/w) |
| R | TF-COND/Vapor | 1 | FL | Flex Joint | Flange | > 10 (w/w) |
| R | TF-COND/Vapor | 2 | FL | Flex Joint | Flange | > 10 (w/w) |
| R | TF-COND/Vapor | 3 | TT | Temperature Transmitter on Top | Other connector | > 10 (w/w) |
| R | TF-COND/Vapor | 4 | NIP | 2" on Bottom | Other connector | > 10 (w/w) |
| R | TF-COND/Vapor | 5 | 90 | | Other connector | > 10 (w/w) |

US EPA ARCHIVE DOCUMENT

# Thin Film Evaporator Inspection

| | Thin Filmer | | | Date monitored: 29 October 04 | Xylenes | PID backgro |
|---|---|---|---|---|---|---|
| **Label** | **COMPONENT/Line** | **Sequence #** | **Pipe Type** | **Description/Note** | **Equip Type** | **Organics** |
| R | TF-COND/Vapor | 6 | NIP | 2" | Other connector | > 10 (w/w) |
| R | TF-COND/Vapor | 7 | VALVE | Drain Valve | Valve in light liquid service | > 10 (w/w) |
| A | COND | 1 | CAP | Blind Flange on South Inlet End | Open-ended valve or line | > 10 (w/w) |
| A | COND | 2 | CAP | Blind Flange on North Outlet End | Open-ended valve or line | > 10 (w/w) |
| A | COND | 3 | FL | 2" Unused Outlet Facing East | Flange | > 10 (w/w) |
| A | COND | 4 | FL | Threaded | Flange | > 10 (w/w) |
| A | COND | 5 | Bushing | 2" x 1" | Other connector | > 10 (w/w) |
| A | COND | 6 | Bushing | 1" x 1/2" | Other connector | > 10 (w/w) |
| A | COND | 7 | CAP | Plug | Other connector | > 10 (w/w) |
| B | COND/Condensate | 1 | FL | Condensate Outlet | Other connector | > 10 (w/w) |
| B | COND/Condensate | 2 | FL | Threaded | Other connector | > 10 (w/w) |
| B | COND/Condensate | 3 | Bushing | 3" x 2" | Other connector | > 10 (w/w) |
| B | COND/Condensate | 4 | NIP | 2" | Other connector | > 10 (w/w) |
| B | COND/Condensate | 5 | CROSS | | Other connector | > 10 (w/w) |
| B | COND/Condensate | 6 | Bushing | 2" x 1" for Temperature Transmitter | Other connector | > 10 (w/w) |
| B | COND/Condensate | 7 | TT | Temperature Transmitter | Other connector | > 10 (w/w) |
| B | COND/Condensate | 8 | Bushing | 2" x 3/4" for SV | Other connector | > 10 (w/w) |
| B | COND/Condensate | 9 | Bushing | 3/4" x 1/4" for SV | Other connector | > 10 (w/w) |
| B | COND/Condensate | 10 | NIP | 1" | Other connector | > 10 (w/w) |
| B | COND/Condensate | 11 | SV | Sample Valve from Bottom of Cross | Valve in light liquid service | > 10 (w/w) |
| B | COND/Condensate | 12 | TP | 7" from Cross to 3-Way Tee Valve | Other connector | > 10 (w/w) |
| B | COND/Condensate | 13 | TV | Into 3-Way Tee Valve | Valve in light liquid service | > 10 (w/w) |
| B | COND/Condensate | 14 | TV | 3-Way Tee Valve to Receiver | Valve in light liquid service | > 10 (w/w) |
| B | COND/Condensate | 15 | Multi | TP welded to 90 | Other connector | > 10 (w/w) |
| B | COND/Condensate | 16 | NIP | 5" | Other connector | > 10 (w/w) |
| B | COND/Condensate | 17 | UNION | | Other connector | > 10 (w/w) |
| B | COND/Condensate | 18 | TP | RECEIVER Top Inlet | Other connector | > 10 (w/w) |
| C | COND/Flush | 1 | TV | 3-Way Tee Valve to Flush Tank | Valve in light liquid service | > 10 (w/w) |
| C | COND/Flush | 2 | TP | Two TP welded together with coupling for proper angle | Other connector | > 10 (w/w) |
| C | COND/Flush | 3 | 90 | | Other connector | > 10 (w/w) |
| C | COND/Flush | 4 | NIP | 4" | Other connector | > 10 (w/w) |
| C | COND/Flush | 5 | UNION | | Other connector | > 10 (w/w) |
| C | COND/Flush | 6 | TP | FLUSH TANK Top Inlet | Other connector | > 10 (w/w) |

US EPA ARCHIVE DOCUMENT

# Thin Film Evaporator Inspection

| | Thin Filmer | | | Date monitored: 29 October 04 | Xylenes | PID backgro |
|---|---|---|---|---|---|---|
| **Label** | **COMPONENT/Line** | **Sequence #** | **Pipe Type** | **Description/Note** | **Equip Type** | **Organics** |
| E | FLUSH TANK/SG | 1 | Bushing | 3/4" x 1/2" | Other connector | > 10 (w/w) |
| E | FLUSH TANK/SG | 2 | VALVE | Top of Sight Glass | Valve in light liquid service | > 10 (w/w) |
| E | FLUSH TANK/SG | 3 | VALVE | Bottom of Sight Glass | Valve in light liquid service | > 10 (w/w) |
| E | FLUSH TANK/SG | 4 | Bushing | 1/2" x 3/4" | Other connector | > 10 (w/w) |
| E | FLUSH TANK/SG | 5 | NIP | 1" From Bottom of Sight Glass | Other connector | > 10 (w/w) |
| E | FLUSH TANK/SG | 6 | SV | Sample Valve | Valve in light liquid service | > 10 (w/w) |
| D | FLUSH TANK/Bottom | 1 | TP | Coupling Outlet on Bottom of FLUSH TANK | Other connector | > 10 (w/w) |
| D | FLUSH TANK/Bottom | 2 | NIP | 3" | Other connector | > 10 (w/w) |
| D | FLUSH TANK/Bottom | 3 | Tee | | Other connector | > 10 (w/w) |
| D | FLUSH TANK/Bottom | 4 | NIP | 2" | Other connector | > 10 (w/w) |
| D | FLUSH TANK/Bottom | 5 | VALVE | Bottom Valve # 24 | Valve in light liquid service | > 10 (w/w) |
| D | FLUSH TANK/Bottom | 6 | NIP | 2" down from Tee (# 3) | Other connector | > 10 (w/w) |
| D | FLUSH TANK/Bottom | 7 | CAM | 2" Camlock | Other connector | > 10 (w/w) |
| D | FLUSH TANK/Bottom | 8 | NIP | 2" west from Tee (# 3) | Other connector | > 10 (w/w) |
| D | FLUSH TANK/Bottom | 9 | VALVE | Side Valve # 25 | Valve in light liquid service | > 10 (w/w) |
| D | FLUSH TANK/Bottom | 10 | Bushing | 2" x 1" | Other connector | > 10 (w/w) |
| D | FLUSH TANK/Bottom | 11 | NIP | 2" | Other connector | > 10 (w/w) |
| D | FLUSH TANK/Bottom | 12 | CAM | 1" Camlock | Other connector | > 10 (w/w) |
| F | FLUSH TANK/Vacuum | 1 | TP | 20" | Other connector | > 10 (w/w) |
| F | FLUSH TANK/Vacuum | 2 | 90 | | Other connector | > 10 (w/w) |
| F | FLUSH TANK/Vacuum | 3 | TP | 4' | Other connector | > 10 (w/w) |
| F | FLUSH TANK/Vacuum | 4 | 90 | | Other connector | > 10 (w/w) |
| F | FLUSH TANK/Vacuum | 5 | TP | 5' | Other connector | > 10 (w/w) |
| F | FLUSH TANK/Vacuum | 6 | UNION | | Other connector | > 10 (w/w) |
| F | FLUSH TANK/Vacuum | 7 | TP | 7" | Other connector | > 10 (w/w) |
| F | FLUSH TANK/Vacuum | 8 | Tee | for Vacuum Guage | Other connector | > 10 (w/w) |
| F | FLUSH TANK/Vacuum | 9 | Bushing | 2" x 1/4" | Other connector | > 10 (w/w) |
| F | FLUSH TANK/Vacuum | 10 | 90 | Brass | Other connector | > 10 (w/w) |
| F | FLUSH TANK/Vacuum | 11 | NIP | 1" | Other connector | > 10 (w/w) |
| F | FLUSH TANK/Vacuum | 12 | VG | Vacuum Guage | Other connector | > 10 (w/w) |
| F | FLUSH TANK/Vacuum | 13 | TP | 7" down from Tee (# 8) | Other connector | > 10 (w/w) |
| F | FLUSH TANK/Vacuum | 14 | Tee | for Bleed Valve | Other connector | > 10 (w/w) |
| F | FLUSH TANK/Vacuum | 15 | Bushing | 2" x 1/2" | Other connector | > 10 (w/w) |

US EPA ARCHIVE DOCUMENT

# Thin Film Evaporator Inspection

| | Thin Filmer | | | Date monitored: 29 October 04 | Xylenes | PID backgro |
|---|---|---|---|---|---|---|
| **Label** | **COMPONENT/Line** | **Sequence #** | **Pipe Type** | **Description/Note** | **Equip Type** | **Organics** |
| F | FLUSH TANK/Vacuum | 16 | VALVE | Bleed Valve | Valve in gas/vapor service | > 10 (w/w) |
| F | FLUSH TANK/Vacuum | 17 | NIP | 4" East from Tee (# 14) | Other connector | > 10 (w/w) |
| F | FLUSH TANK/Vacuum | 18 | VALVE | Vacuum Control | Valve in gas/vapor service | > 10 (w/w) |
| F | FLUSH TANK/Vacuum | 19 | NIP | 4" into Tee linking Vacuum Line from RECEIVER | Other connector | > 10 (w/w) |
| M | RECEIVER/Vacuum | 1 | TP | 18" Up | Other connector | > 10 (w/w) |
| M | RECEIVER/Vacuum | 2 | 90 | | Other connector | > 10 (w/w) |
| M | RECEIVER/Vacuum | 3 | TP | 5.5' SE | Other connector | > 10 (w/w) |
| M | RECEIVER/Vacuum | 4 | 90 | | Other connector | > 10 (w/w) |
| M | RECEIVER/Vacuum | 5 | TP | 7' Down | Other connector | > 10 (w/w) |
| M | RECEIVER/Vacuum | 6 | UNION | | Other connector | > 10 (w/w) |
| M | RECEIVER/Vacuum | 7 | NIP | 4" | Other connector | > 10 (w/w) |
| M | RECEIVER/Vacuum | 8 | 90 | | Other connector | > 10 (w/w) |
| M | RECEIVER/Vacuum | 9 | NIP | 6" | Other connector | > 10 (w/w) |
| M | RECEIVER/Vacuum | 10 | CROSS | for VG on Top and Bleed Valve on Bottom | Other connector | > 10 (w/w) |
| M | RECEIVER/Vacuum | 11 | Bushing | 2" x 1/4" on Top of Cross | Other connector | > 10 (w/w) |
| M | RECEIVER/Vacuum | 12 | NIP | Spiral Nipple | Other connector | > 10 (w/w) |
| M | RECEIVER/Vacuum | 13 | VALVE | for Vacuum Guage | Valve in gas/vapor service | > 10 (w/w) |
| M | RECEIVER/Vacuum | 14 | NIP | 1" | Other connector | > 10 (w/w) |
| M | RECEIVER/Vacuum | 15 | VG | Vacuum Guage | Other connector | > 10 (w/w) |
| M | RECEIVER/Vacuum | 16 | Bushing | 2" x 1/2" on Bottom of Cross | Other connector | > 10 (w/w) |
| M | RECEIVER/Vacuum | 17 | NIP | 2" | Other connector | > 10 (w/w) |
| M | RECEIVER/Vacuum | 18 | VALVE | Bleed Valve | Valve in gas/vapor service | > 10 (w/w) |
| M | RECEIVER/Vacuum | 19 | TP | 7" East from CROSS | Other connector | > 10 (w/w) |
| M | RECEIVER/Vacuum | 20 | VALVE | Vacuum Control | Valve in gas/vapor service | > 10 (w/w) |
| M | RECEIVER/Vacuum | 21 | TP | 9" | Other connector | > 10 (w/w) |
| M | RECEIVER/Vacuum | 22 | 90 | | Other connector | > 10 (w/w) |
| M | RECEIVER/Vacuum | 23 | TP | 12" up into Tee | Other connector | > 10 (w/w) |
| M | RECEIVER/Vacuum | 24 | Tee | Links Vacuum Lines from RECEIVER & FLUSH TANK | Other connector | > 10 (w/w) |
| M | RECEIVER/Vacuum | 25 | TP | 30" East from Tee | Other connector | > 10 (w/w) |
| M | RECEIVER/Vacuum | 26 | 90 | | Other connector | > 10 (w/w) |
| M | RECEIVER/Vacuum | 27 | TP | 8' North | Other connector | > 10 (w/w) |
| M | RECEIVER/Vacuum | 28 | 90 | | Other connector | > 10 (w/w) |
| M | RECEIVER/Vacuum | 29 | TP | 3.5' down | Other connector | > 10 (w/w) |

US EPA ARCHIVE DOCUMENT

# Thin Film Evaporator Inspection

| | Thin Filmer | | | Date monitored: 29 October 04 | Xylenes | PID backgro |
|---|---|---|---|---|---|---|
| **Label** | **COMPONENT/Line** | **Sequence #** | **Pipe Type** | **Description/Note** | **Equip Type** | **Organics** |
| M | RECEIVER/Vacuum | 30 | CV | Into Vacuum Pump | Other connector | > 10 (w/w) |
| N | RECEIVER | 1 | CAP | 2" Plug on Top | Other connector | > 10 (w/w) |
| I | RECEIVER/Level | 1 | FL | On RECEIVER for Level Controller | Flange | > 10 (w/w) |
| I | RECEIVER/Level | 2 | FL | Level Controller | Flange | > 10 (w/w) |
| K | RECEIVER/SG | 1 | Bushing | 3/4" x 1/2" | Other connector | > 10 (w/w) |
| K | RECEIVER/SG | 2 | VALVE | Top of Sight Glass | Valve in light liquid service | > 10 (w/w) |
| K | RECEIVER/SG | 3 | VALVE | Bottom of Sight Glass | Valve in light liquid service | > 10 (w/w) |
| K | RECEIVER/SG | 4 | Bushing | 1/2" x 3/4" | Other connector | > 10 (w/w) |
| K | RECEIVER/SG | 5 | NIP | 1" From Bottom of Sight Glass | Other connector | > 10 (w/w) |
| K | RECEIVER/SG | 6 | SV | Sample Valve | Valve in light liquid service | > 10 (w/w) |
| G | RECEIVER/Bottom | 1 | TP | Coupling Outlet on Bottom of RECEIVER | Other connector | > 10 (w/w) |
| G | RECEIVER/Bottom | 2 | NIP | 2" | Other connector | > 10 (w/w) |
| G | RECEIVER/Bottom | 3 | VALVE | | Valve in light liquid service | > 10 (w/w) |
| G | RECEIVER/Bottom | 4 | Bushing | 2" x 1" | Other connector | > 10 (w/w) |
| G | RECEIVER/Bottom | 5 | TP | 3.5' down into Tee | Other connector | > 10 (w/w) |
| G | RECEIVER/Bottom | 6 | Tee | | Other connector | > 10 (w/w) |
| H | RECEIVER/Drain | 1 | NIP | 4" East from Bottom Line Tee | Other connector | > 10 (w/w) |
| H | RECEIVER/Drain | 2 | VALVE | | Valve in light liquid service | > 10 (w/w) |
| H | RECEIVER/Drain | 3 | NIP | 1" | Other connector | > 10 (w/w) |
| H | RECEIVER/Drain | 4 | Bushing | 1" x 2" | Other connector | > 10 (w/w) |
| H | RECEIVER/Drain | 5 | CAM | Camlock | Other connector | > 10 (w/w) |
| J | RECEIVER/Product | 1 | NIP | 1" West from Bottom Line Tee | Other connector | > 10 (w/w) |
| J | RECEIVER/Product | 2 | VALVE | Before Pump | Valve in light liquid service | > 10 (w/w) |
| J | RECEIVER/Product | 3 | TP | 7" West towards Pump | Other connector | > 10 (w/w) |
| J | RECEIVER/Product | 4 | Reducer | 1" x 3/4" | Other connector | > 10 (w/w) |
| J | RECEIVER/Product | 5 | NIP | 1" | Other connector | > 10 (w/w) |
| J | RECEIVER/Product | 6 | FL | Threaded | Flange | > 10 (w/w) |
| J | RECEIVER/Product | 7 | P | Flanged Pump | Pump in light liquid service | > 10 (w/w) |
| J | RECEIVER/Product | 8 | FL | Threaded | Flange | > 10 (w/w) |
| J | RECEIVER/Product | 9 | NIP | 2" | Other connector | > 10 (w/w) |
| J | RECEIVER/Product | 10 | Reducer | 3/4" x 1" | Other connector | > 10 (w/w) |
| J | RECEIVER/Product | 11 | NIP | 1" | Other connector | > 10 (w/w) |
| J | RECEIVER/Product | 12 | Bushing | 1" x 2" | Other connector | > 10 (w/w) |

US EPA ARCHIVE DOCUMENT

# Thin Film Evaporator Inspection

| | Thin Filmer | | | Date monitored: 29 October 04 | Xylenes | PID backgro |
|---|---|---|---|---|---|---|
| **Label** | **COMPONENT/Line** | **Sequence #** | **Pipe Type** | **Description/Note** | **Equip Type** | **Organics** |
| J | RECEIVER/Product | 13 | UNION | | Other connector | > 10 (w/w) |
| J | RECEIVER/Product | 14 | Bushing | 2" x 1" | Other connector | > 10 (w/w) |
| J | RECEIVER/Product | 15 | NIP | 1" | Other connector | > 10 (w/w) |
| J | RECEIVER/Product | 16 | VALVE | After Pump | Valve in light liquid service | > 10 (w/w) |
| J | RECEIVER/Product | 17 | NIP | 4" | Other connector | > 10 (w/w) |
| J | RECEIVER/Product | 18 | Tee | | Other connector | > 10 (w/w) |
| J | RECEIVER/Product | 19 | NIP | 2" West from Tee | Other connector | > 10 (w/w) |
| J | RECEIVER/Product | 20 | VALVE | Drain | Valve in light liquid service | > 10 (w/w) |
| J | RECEIVER/Product | 21 | NIP | 2" | Other connector | > 10 (w/w) |
| J | RECEIVER/Product | 22 | 90 | Down | Other connector | > 10 (w/w) |
| J | RECEIVER/Product | 23 | TP | 20" up from Tee (# 18) to Tee (# 24) | Other connector | > 10 (w/w) |
| J | RECEIVER/Product | 24 | Tee | | Other connector | > 10 (w/w) |
| J | RECEIVER/Product | 25 | NIP | 5" South from Tee (# 24) | Other connector | > 10 (w/w) |
| J | RECEIVER/Product | 26 | VALVE | for Air Blowing of Line | Valve in light liquid service | > 10 (w/w) |
| J | RECEIVER/Product | 27 | NIP | 3" South | Other connector | > 10 (w/w) |
| J | RECEIVER/Product | 28 | CAM | Male | Other connector | > 10 (w/w) |
| J | RECEIVER/Product | 29 | CAM | Female | Other connector | > 10 (w/w) |
| J | RECEIVER/Product | 30 | Bushing | 1" x 1/2" | Other connector | > 10 (w/w) |
| J | RECEIVER/Product | 31 | Bushing | 1/2" X 1/4" | Other connector | > 10 (w/w) |
| J | RECEIVER/Product | 32 | NIP | 1" | Other connector | > 10 (w/w) |
| J | RECEIVER/Product | 33 | VALVE | for Air Blowing of Line | Valve in light liquid service | > 10 (w/w) |
| J | RECEIVER/Product | 34 | AF | Air Fitting | Other connector | > 10 (w/w) |
| J | RECEIVER/Product | 35 | TP | 8" North into Tee (# 36) | Other connector | > 10 (w/w) |
| J | RECEIVER/Product | 36 | Tee | | Other connector | > 10 (w/w) |
| J | RECEIVER/Product | 37 | TP | 12" North from Tee (# 36) | Other connector | > 10 (w/w) |
| J | RECEIVER/Product | 38 | UNION | | Other connector | > 10 (w/w) |
| J | RECEIVER/Product | 39 | Bushing | 1" x 3/4" | Other connector | > 10 (w/w) |
| J | RECEIVER/Product | 40 | NIP | 4" | Other connector | > 10 (w/w) |
| J | RECEIVER/Product | 41 | CV | Level Control Valve | Valve in light liquid service | > 10 (w/w) |
| J | RECEIVER/Product | 42 | NIP | 1" | Other connector | > 10 (w/w) |
| J | RECEIVER/Product | 43 | Reducer | 3/4" x 1" | Other connector | > 10 (w/w) |
| J | RECEIVER/Product | 44 | NIP | 2" into Tee (# 45) | Other connector | > 10 (w/w) |
| J | RECEIVER/Product | 45 | Tee | | Other connector | > 10 (w/w) |

US EPA ARCHIVE DOCUMENT

# Thin Film Evaporator Inspection

| | Thin Filmer | | | Date monitored: 29 October 04 | Xylenes | PID backgro |
|---|---|---|---|---|---|---|
| **Label** | **COMPONENT/Line** | **Sequence #** | **Pipe Type** | **Description/Note** | **Equip Type** | **Organics** |
| J | RECEIVER/Product | 46 | TP | 6" down from Tee (# 45) for start of Level Control Bypass Line | Other connector | > 10 (w/w) |
| J | RECEIVER/Product | 47 | 90 | Level Control Bypass Line | Other connector | > 10 (w/w) |
| J | RECEIVER/Product | 48 | NIP | 4" North from 90 | Other connector | > 10 (w/w) |
| J | RECEIVER/Product | 49 | VALVE | Level Control Bypass Line Valve | Valve in light liquid service | > 10 (w/w) |
| J | RECEIVER/Product | 50 | NIP | 2" | Other connector | > 10 (w/w) |
| J | RECEIVER/Product | 51 | UNION | | Other connector | > 10 (w/w) |
| J | RECEIVER/Product | 52 | TP | 16" North into Tee (# 52) | Other connector | > 10 (w/w) |
| J | RECEIVER/Product | 53 | Tee | Level Control Bypass Line | Other connector | > 10 (w/w) |
| J | RECEIVER/Product | 54 | NIP | 3" Down from Tee (# 53) | Other connector | > 10 (w/w) |
| J | RECEIVER/Product | 55 | VALVE | Level Control Bypass Line Drain Valve | Valve in light liquid service | > 10 (w/w) |
| J | RECEIVER/Product | 56 | TP | 7" Up from Tee (# 53) in Level Control Bypass Line into Tee (# 4 | Other connector | > 10 (w/w) |
| J | RECEIVER/Product | 57 | NIP | 3" North into Tee (# 58) | Other connector | > 10 (w/w) |
| J | RECEIVER/Product | 58 | Tee | | Other connector | > 10 (w/w) |
| J | RECEIVER/Product | 59 | NIP | 2" Up from Tee (# 58) | Other connector | > 10 (w/w) |
| J | RECEIVER/Product | 60 | 90 | | Other connector | > 10 (w/w) |
| J | RECEIVER/Product | 61 | NIP | 4" East | Other connector | > 10 (w/w) |
| J | RECEIVER/Product | 62 | 90 | | Other connector | > 10 (w/w) |
| J | RECEIVER/Product | 63 | NIP | 5" Up | Other connector | > 10 (w/w) |
| J | RECEIVER/Product | 64 | VALVE | Up To Tee (# 70) for West Trough & Blend Room Trough | Valve in light liquid service | > 10 (w/w) |
| J | RECEIVER/Product | 65 | TP | 10' up | Other connector | > 10 (w/w) |
| J | RECEIVER/Product | 66 | UNION | | Other connector | > 10 (w/w) |
| J | RECEIVER/Product | 67 | NIP | 3" | Other connector | > 10 (w/w) |
| J | RECEIVER/Product | 68 | VALVE | | Valve in light liquid service | > 10 (w/w) |
| J | RECEIVER/Product | 69 | NIP | 1" | Other connector | > 10 (w/w) |
| J | RECEIVER/Product | 70 | Tee | | Other connector | > 10 (w/w) |
| J | RECEIVER/Product | 71 | NIP | 2" North from Tee (# 70) | Other connector | > 10 (w/w) |
| J | RECEIVER/Product | 72 | VALVE | | Other connector | > 10 (w/w) |
| J | RECEIVER/Product | 73 | NIP | 4" | Other connector | > 10 (w/w) |
| J | RECEIVER/Product | 74 | UNION | | Other connector | > 10 (w/w) |
| J | RECEIVER/Product | 75 | TP | 3.5' | Other connector | > 10 (w/w) |
| J | RECEIVER/Product | 76 | 90 | down | Other connector | > 10 (w/w) |
| J | RECEIVER/Product | 77 | TP | 20" | Other connector | > 10 (w/w) |
| J | RECEIVER/Product | 78 | 90 | North | Other connector | > 10 (w/w) |

US EPA ARCHIVE DOCUMENT

# Thin Film Evaporator Inspection

| | Thin Filmer | | | Date monitored: 29 October 04 | Xylenes | PID backgro |
|---|---|---|---|---|---|---|
| Label | COMPONENT/Line | Sequence # | Pipe Type | Description/Note | Equip Type | Organics |
| J | RECEIVER/Product | 79 | TP | 8" | Other connector | > 10 (w/w) |
| J | RECEIVER/Product | 80 | 90 | West | Other connector | > 10 (w/w) |
| J | RECEIVER/Product | 81 | TP | 28" | Other connector | > 10 (w/w) |
| J | RECEIVER/Product | 82 | 90 | down | Other connector | > 10 (w/w) |
| J | RECEIVER/Product | 83 | TP | 7' | Other connector | > 10 (w/w) |
| J | RECEIVER/Product | 84 | UNION | | Other connector | > 10 (w/w) |
| J | RECEIVER/Product | 85 | NIP | 4" | Other connector | > 10 (w/w) |
| J | RECEIVER/Product | 86 | 90 | West | Other connector | > 10 (w/w) |
| J | RECEIVER/Product | 87 | NIP | 2" into back of West Trough | Other connector | > 10 (w/w) |
| J | RECEIVER/Product | 88 | NIP | 2" out into West Trough | Other connector | > 10 (w/w) |
| J | RECEIVER/Product | 89 | VALVE | | Valve in light liquid service | > 10 (w/w) |
| J | RECEIVER/Product | 90 | NIP | 1" | Other connector | > 10 (w/w) |
| J | RECEIVER/Product | 91 | Camlock | | Other connector | > 10 (w/w) |
| J | RECEIVER/Product | 92 | NIP | 2" South from Tee (# 70) | Other connector | > 10 (w/w) |
| J | RECEIVER/Product | 93 | UNION | | Other connector | > 10 (w/w) |
| J | RECEIVER/Product | 94 | NIP | 4" | Other connector | > 10 (w/w) |
| J | RECEIVER/Product | 95 | VALVE | | Other connector | > 10 (w/w) |
| J | RECEIVER/Product | 96 | TP | 5' | Other connector | > 10 (w/w) |
| J | RECEIVER/Product | 97 | 45 | SW | Other connector | > 10 (w/w) |
| J | RECEIVER/Product | 98 | TP | 12" | Other connector | > 10 (w/w) |
| J | RECEIVER/Product | 99 | 45 | South | Other connector | > 10 (w/w) |
| J | RECEIVER/Product | 100 | TP | 14' | Other connector | > 10 (w/w) |
| J | RECEIVER/Product | 101 | UNION | | Other connector | > 10 (w/w) |
| J | RECEIVER/Product | 102 | TP | 16" | Other connector | > 10 (w/w) |
| J | RECEIVER/Product | 103 | 90 | down | Other connector | > 10 (w/w) |
| J | RECEIVER/Product | 104 | TP | 16" | Other connector | > 10 (w/w) |
| J | RECEIVER/Product | 105 | 90 | West | Other connector | > 10 (w/w) |
| J | RECEIVER/Product | 106 | TP | 30" | Other connector | > 10 (w/w) |
| J | RECEIVER/Product | 107 | Coupling | | Other connector | > 10 (w/w) |
| J | RECEIVER/Product | 108 | TP | 28" | Other connector | > 10 (w/w) |
| J | RECEIVER/Product | 109 | 90 | down | Other connector | > 10 (w/w) |
| J | RECEIVER/Product | 110 | NIP | 1" | Other connector | > 10 (w/w) |
| J | RECEIVER/Product | 111 | 90 | South | Other connector | > 10 (w/w) |

US EPA ARCHIVE DOCUMENT

# Thin Film Evaporator Inspection

| | Thin Filmer | | | Date monitored: 29 October 04 | Xylenes | PID backgro |
|---|---|---|---|---|---|---|
| **Label** | **COMPONENT/Line** | **Sequence #** | **Pipe Type** | **Description/Note** | **Equip Type** | **Organics** |
| J | RECEIVER/Product | 112 | TP | 10" through wall | Other connector | > 10 (w/w) |
| J | RECEIVER/Product | 113 | 90 | down | Other connector | > 10 (w/w) |
| J | RECEIVER/Product | 114 | NIP | 1" | Other connector | > 10 (w/w) |
| J | RECEIVER/Product | 115 | 90 | East | Other connector | > 10 (w/w) |
| J | RECEIVER/Product | 116 | TP | 4' | Other connector | > 10 (w/w) |
| J | RECEIVER/Product | 117 | UNION | | Other connector | > 10 (w/w) |
| J | RECEIVER/Product | 118 | TP | 4' | Other connector | > 10 (w/w) |
| J | RECEIVER/Product | 119 | 90 | down | Other connector | > 10 (w/w) |
| J | RECEIVER/Product | 120 | TP | 8' | Other connector | > 10 (w/w) |
| J | RECEIVER/Product | 121 | 90 | South | Other connector | > 10 (w/w) |
| J | RECEIVER/Product | 122 | NIP | 3" | Other connector | > 10 (w/w) |
| J | RECEIVER/Product | 123 | UNION | | Other connector | > 10 (w/w) |
| J | RECEIVER/Product | 124 | NIP | 2" into back of Blend Room Trough | Other connector | > 10 (w/w) |
| J | RECEIVER/Product | 125 | NIP | 1" out into Blend Room Trough | Other connector | > 10 (w/w) |
| J | RECEIVER/Product | 126 | VALVE | | Valve in light liquid service | > 10 (w/w) |
| J | RECEIVER/Product | 127 | NIP | 1" | Other connector | > 10 (w/w) |
| J | RECEIVER/Product | 128 | Camlock | with Cap | Other connector | > 10 (w/w) |
| J | RECEIVER/Product | 129 | NIP | 1" North from Tee (# 58) | Other connector | > 10 (w/w) |
| J | RECEIVER/Product | 130 | CAM | Camlock Fitting with Cap | Other connector | > 10 (w/w) |
| | | | | | | |
| | | | | | | |
| | | | | | | |

US EPA ARCHIVE DOCUMENT

# Thin Film Evaporator Inspection

| und reading: 0.0 | | | | | | |
|---|---|---|---|---|---|---|
| HW State | Compliance Method | PPM | Leak? Y/N | Work Order # | Retest Date | Leak Fixed? |
| Light Liquid | Second valve or cap | | | | | |
| Light Liquid | Monitor if evidence of leak | | | | | |
| Light Liquid | Second valve or cap | | | | | |
| Light Liquid | Monthly LDAR | | | | | |
| Light Liquid | Monitor if evidence of leak | | | | | |
| Light Liquid | Monitor if evidence of leak | | | | | |
| Light Liquid | Monthly LDAR | | | | | |
| Light Liquid | Monitor if evidence of leak | | | | | |
| Light Liquid | Monitor if evidence of leak | | | | | |
| Light Liquid | Monitor if evidence of leak | | | | | |
| Light Liquid | Monitor if evidence of leak | | | | | |
| Light Liquid | Monitor if evidence of leak | | | | | |
| Light Liquid | Monitor if evidence of leak | | | | | |
| Light Liquid | Monitor if evidence of leak | | | | | |
| Light Liquid | Monitor if evidence of leak | | | | | |
| Light Liquid | Monitor if evidence of leak | | | | | |
| Light Liquid | Monthly LDAR | | | | | |
| Light Liquid | Monitor if evidence of leak | | | | | |
| Light Liquid | Monitor if evidence of leak | | | | | |
| Light Liquid | Monitor if evidence of leak | | | | | |
| Light Liquid | Monitor if evidence of leak | | | | | |
| Light Liquid | Monthly LDAR | | | | | |
| Light Liquid | Monitor if evidence of leak | | | | | |
| Light Liquid | Monitor if evidence of leak | | | | | |
| Light Liquid | Monitor if evidence of leak | | | | | |
| Light Liquid | Monitor if evidence of leak | | | | | |
| Light Liquid | Monitor if evidence of leak | | | | | |
| Light Liquid | Monitor if evidence of leak | | | | | |
| Light Liquid | Monthly LDAR | | | | | |
| Light Liquid | Monitor if evidence of leak | | | | | |
| Light Liquid | Monitor if evidence of leak | | | | | |
| Light Liquid | Monitor if evidence of leak | | | | | |
| Light Liquid | Monitor if evidence of leak | | | | | |

US EPA ARCHIVE DOCUMENT

# Thin Film Evaporator Inspection

| und reading: 0.0 | | | | | | |
|---|---|---|---|---|---|---|
| HW State | Compliance Method | PPM | Leak? Y/N | Work Order # | Retest Date | Leak Fixed? |
| Light Liquid | Monitor if evidence of leak | | | | | |
| Light Liquid | Monthly LDAR | | | | | |
| Light Liquid | Monitor if evidence of leak | | | | | |
| Light Liquid | Monitor if evidence of leak | | | | | |
| Light Liquid | Monitor if evidence of leak | | | | | |
| Light Liquid | Monitor if evidence of leak | | | | | |
| Light Liquid | Monitor if evidence of leak | | | | | |
| Light Liquid | Monitor if evidence of leak | | | | | |
| Light Liquid | Monitor if evidence of leak | | | | | |
| Light Liquid | Monitor if evidence of leak | | | | | |
| Light Liquid | Monitor if evidence of leak | | | | | |
| Light Liquid | Monitor if evidence of leak | | | | | |
| Light Liquid | Monthly LDAR | | | | | |
| Light Liquid | Monitor if evidence of leak | | | | | |
| Light Liquid | Monitor if evidence of leak | | | | | |
| Light Liquid | Monitor if evidence of leak | | | | | |
| Light Liquid | Monitor if evidence of leak | | | | | |
| Light Liquid | Monitor if evidence of leak | | | | | |
| Light Liquid | Monitor if evidence of leak | | | | | |
| Light Liquid | Monitor if evidence of leak | | | | | |
| Light Liquid | Monitor if evidence of leak | | | | | |
| Light Liquid | Monitor if evidence of leak | | | | | |
| Light Liquid | Monitor if evidence of leak | | | | | |
| Light Liquid | Monthly LDAR | | | | | |
| Light Liquid | Monitor if evidence of leak | | | | | |
| Light Liquid | Monitor if evidence of leak | | | | | |
| Light Liquid | Monitor if evidence of leak | | | | | |
| | | | | | | |
| Light Liquid | Monitor if evidence of leak | | | | | |
| Light Liquid | Second valve or cap | | | | | |
| Light Liquid | Monitor if evidence of leak | | | | | |
| Light Liquid | Monthly LDAR | | | | | |
| Light Liquid | Monitor if evidence of leak | | | | | |

US EPA ARCHIVE DOCUMENT

# Thin Film Evaporator Inspection

| und reading: 0.0 | | | | | | |
|---|---|---|---|---|---|---|
| HW State | Compliance Method | PPM | Leak? Y/N | Work Order # | Retest Date | Leak Fixed? |
| Light Liquid | Monitor if evidence of leak | | | | | |
| Light Liquid | Monitor if evidence of leak | | | | | |
| Light Liquid | Monthly LDAR | | | | | |
| Light Liquid | Second valve or cap | | | | | |
| Light Liquid | Monitor if evidence of leak | | | | | |
| Light Liquid | Monthly LDAR | | | | | |
| Light Liquid | Monitor if evidence of leak | | | | | |
| Light Liquid | Monitor if evidence of leak | | | | | |
| Light Liquid | Monitor if evidence of leak | | | | | |
| Light Liquid | Monthly LDAR | | | | | |
| Light Liquid | Monitor if evidence of leak | | | | | |
| Light Liquid | Monitor if evidence of leak | | | | | |
| Light Liquid | Monitor if evidence of leak | | | | | |
| Light Liquid | Monitor if evidence of leak | | | | | |
| Light Liquid | Monitor if evidence of leak | | | | | |
| Light Liquid | Monitor if evidence of leak | | | | | |
| Light Liquid | Monitor if evidence of leak | | | | | |
| Light Liquid | Monthly LDAR | | | | | |
| Light Liquid | Monitor if evidence of leak | | | | | |
| Light Liquid | Monitor if evidence of leak | | | | | |
| Light Liquid | Monthly LDAR | | | | | |
| Light Liquid | Monitor if evidence of leak | | | | | |
| Light Liquid | Monitor if evidence of leak | | | | | |
| Light Liquid | Monitor if evidence of leak | | | | | |
| Light Liquid | Monitor if evidence of leak | | | | | |
| Light Liquid | Monitor if evidence of leak | | | | | |
| Light Liquid | Monthly LDAR | | | | | |
| Light Liquid | Monitor if evidence of leak | | | | | |
| Light Liquid | Monitor if evidence of leak | | | | | |
| Light Liquid | Monitor if evidence of leak | | | | | |
| Light Liquid | Monitor if evidence of leak | | | | | |
| Light Liquid | Monitor if evidence of leak | | | | | |
| Light Liquid | Monitor if evidence of leak | | | | | |

US EPA ARCHIVE DOCUMENT

# Thin Film Evaporator Inspection

| und reading: 0.0 | | | | | | |
|---|---|---|---|---|---|---|
| HW State | Compliance Method | PPM | Leak? Y/N | Work Order # | Retest Date | Leak Fixed? |
| Light Liquid | Monitor if evidence of leak | | | | | |
| Light Liquid | Monthly LDAR | | | | | |
| Light Liquid | Second valve or cap | | | | | |
| Light Liquid | Second valve or cap | | | | | |
| Light Liquid | Monitor if evidence of leak | | | | | |
| Light Liquid | Monitor if evidence of leak | | | | | |
| Light Liquid | Monitor if evidence of leak | | | | | |
| Light Liquid | Monitor if evidence of leak | | | | | |
| Light Liquid | Monitor if evidence of leak | | | | | |
| Light Liquid | Monitor if evidence of leak | | | | | |
| Light Liquid | Monitor if evidence of leak | | | | | |
| Light Liquid | Monitor if evidence of leak | | | | | |
| Light Liquid | Monitor if evidence of leak | | | | | |
| Light Liquid | Monitor if evidence of leak | | | | | |
| Light Liquid | Monitor if evidence of leak | | | | | |
| Light Liquid | Monitor if evidence of leak | | | | | |
| Light Liquid | Monitor if evidence of leak | | | | | |
| Light Liquid | Monitor if evidence of leak | | | | | |
| Light Liquid | Monitor if evidence of leak | | | | | |
| Light Liquid | Monthly LDAR | | | | | |
| Light Liquid | Monitor if evidence of leak | | | | | |
| Light Liquid | Monthly LDAR | | | | | |
| Light Liquid | Monthly LDAR | | | | | |
| Light Liquid | Monitor if evidence of leak | | | | | |
| Light Liquid | Monitor if evidence of leak | | | | | |
| Light Liquid | Monitor if evidence of leak | | | | | |
| Light Liquid | Monitor if evidence of leak | | | | | |
| Light Liquid | Monthly LDAR | | | | | |
| Light Liquid | Monitor if evidence of leak | | | | | |
| Light Liquid | Monitor if evidence of leak | | | | | |
| Light Liquid | Monitor if evidence of leak | | | | | |
| Light Liquid | Monitor if evidence of leak | | | | | |
| Light Liquid | Monitor if evidence of leak | | | | | |

US EPA ARCHIVE DOCUMENT

# Thin Film Evaporator Inspection

| und reading: 0.0 | | | | | | |
|---|---|---|---|---|---|---|
| HW State | Compliance Method | PPM | Leak? Y/N | Work Order # | Retest Date | Leak Fixed? |
| Light Liquid | Monitor if evidence of leak | | | | | |
| Light Liquid | Monthly LDAR | | | | | |
| Light Liquid | Monthly LDAR | | | | | |
| Light Liquid | Monitor if evidence of leak | | | | | |
| Light Liquid | Monitor if evidence of leak | | | | | |
| Light Liquid | Monthly LDAR | | | | | |
| Light Liquid | Monitor if evidence of leak | | | | | |
| Light Liquid | Monitor if evidence of leak | | | | | |
| Light Liquid | Monitor if evidence of leak | | | | | |
| Light Liquid | Monitor if evidence of leak | | | | | |
| Light Liquid | Monthly LDAR | | | | | |
| Light Liquid | Monitor if evidence of leak | | | | | |
| Light Liquid | Monitor if evidence of leak | | | | | |
| Light Liquid | Monitor if evidence of leak | | | | | |
| Light Liquid | Monthly LDAR | | | | | |
| Light Liquid | Monitor if evidence of leak | | | | | |
| Light Liquid | Monitor if evidence of leak | | | | | |
| Light Liquid | Monitor if evidence of leak | | | | | |
| Light Liquid | Monitor if evidence of leak | | | | | |
| Light Liquid | Monitor if evidence of leak | | | | | |
| Light Liquid | Monitor if evidence of leak | | | | | |
| Light Liquid | Monitor if evidence of leak | | | | | |
| Light Liquid | Monitor if evidence of leak | | | | | |
| Light Liquid | Monitor if evidence of leak | | | | | |
| Light Liquid | Monitor if evidence of leak | | | | | |
| Gas/Vapor | Monitor if evidence of leak | | | | | |
| Light Liquid | Monitor if evidence of leak | | | | | |
| Light Liquid | Monitor if evidence of leak | | | | | |
| Light Liquid | Monitor if evidence of leak | | | | | |
| Gas/Vapor | Monitor if evidence of leak | | | | | |
| Gas/Vapor | Monitor if evidence of leak | | | | | |
| Gas/Vapor | Monitor if evidence of leak | | | | | |
| Light Liquid | Monitor if evidence of leak | | | | | |

US EPA ARCHIVE DOCUMENT

# Thin Film Evaporator Inspection

| und reading: 0.0 | | | | | | |
|---|---|---|---|---|---|---|
| HW State | Compliance Method | PPM | Leak? Y/N | Work Order # | Retest Date | Leak Fixed? |
| Gas/Vapor | Monthly LDAR | | | | | |
| Light Liquid | Monitor if evidence of leak | | | | | |
| Gas/Vapor | Monthly LDAR | | | | | |
| Gas/Vapor | Monitor if evidence of leak | | | | | |
| Gas/Vapor | Monitor if evidence of leak | | | | | |
| Gas/Vapor | Monitor if evidence of leak | | | | | |
| Gas/Vapor | Monitor if evidence of leak | | | | | |
| Gas/Vapor | Monitor if evidence of leak | | | | | |
| Gas/Vapor | Monitor if evidence of leak | | | | | |
| Gas/Vapor | Monitor if evidence of leak | | | | | |
| Gas/Vapor | Monitor if evidence of leak | | | | | |
| Gas/Vapor | Monitor if evidence of leak | | | | | |
| Gas/Vapor | Monitor if evidence of leak | | | | | |
| Gas/Vapor | Monitor if evidence of leak | | | | | |
| Gas/Vapor | Monitor if evidence of leak | | | | | |
| Gas/Vapor | Monitor if evidence of leak | | | | | |
| Gas/Vapor | Monthly LDAR | | | | | |
| Gas/Vapor | Monitor if evidence of leak | | | | | |
| Gas/Vapor | Monitor if evidence of leak | | | | | |
| Gas/Vapor | Monitor if evidence of leak | | | | | |
| Gas/Vapor | Monitor if evidence of leak | | | | | |
| Gas/Vapor | Monthly LDAR | | | | | |
| Gas/Vapor | Monitor if evidence of leak | | | | | |
| Gas/Vapor | Monthly LDAR | | | | | |
| Gas/Vapor | Monitor if evidence of leak | | | | | |
| Gas/Vapor | Monitor if evidence of leak | | | | | |
| Gas/Vapor | Monitor if evidence of leak | | | | | |
| Gas/Vapor | Monitor if evidence of leak | | | | | |
| Gas/Vapor | Monitor if evidence of leak | | | | | |
| Gas/Vapor | Monitor if evidence of leak | | | | | |
| Gas/Vapor | Monitor if evidence of leak | | | | | |
| Gas/Vapor | Monitor if evidence of leak | | | | | |
| Gas/Vapor | Monitor if evidence of leak | | | | | |

US EPA ARCHIVE DOCUMENT

# Thin Film Evaporator Inspection

| und reading: 0.0 | | | | | | |
|---|---|---|---|---|---|---|
| HW State | Compliance Method | PPM | Leak? Y/N | Work Order # | Retest Date | Leak Fixed? |
| Gas/Vapor | Monitor if evidence of leak | | | | | |
| Light Liquid | Monitor if evidence of leak | | | | | |
| Light Liquid | Monitor if evidence of leak | | | | | |
| Light Liquid | Monitor if evidence of leak | | | | | |
| Light Liquid | Monitor if evidence of leak | | | | | |
| Light Liquid | Monthly LDAR | | | | | |
| Light Liquid | Monthly LDAR | | | | | |
| Light Liquid | Monitor if evidence of leak | | | | | |
| Light Liquid | Monitor if evidence of leak | | | | | |
| Light Liquid | Monthly LDAR | | | | | |
| Light Liquid | Monitor if evidence of leak | | | | | |
| Light Liquid | Monitor if evidence of leak | | | | | |
| Light Liquid | Monthly LDAR | | | | | |
| Light Liquid | Monitor if evidence of leak | | | | | |
| Light Liquid | Monitor if evidence of leak | | | | | |
| Light Liquid | Monitor if evidence of leak | | | | | |
| Light Liquid | Monitor if evidence of leak | | | | | |
| Light Liquid | Monthly LDAR | | | | | |
| Light Liquid | Monitor if evidence of leak | | | | | |
| Light Liquid | Monitor if evidence of leak | | | | | |
| Light Liquid | Monitor if evidence of leak | | | | | |
| Light Liquid | Monitor if evidence of leak | | | | | |
| Light Liquid | Monthly LDAR | | | | | |
| Light Liquid | Monitor if evidence of leak | | | | | |
| Light Liquid | Monitor if evidence of leak | | | | | |
| Light Liquid | Monitor if evidence of leak | | | | | |
| Light Liquid | Monitor if evidence of leak | | | | | |
| Light Liquid | Monthly LDAR | | | | | |
| Light Liquid | Monitor if evidence of leak | | | | | |
| Light Liquid | Monitor if evidence of leak | | | | | |
| Light Liquid | Monitor if evidence of leak | | | | | |
| Light Liquid | Monitor if evidence of leak | | | | | |
| Light Liquid | Monitor if evidence of leak | | | | | |

US EPA ARCHIVE DOCUMENT

# Thin Film Evaporator Inspection

| und reading: 0.0 | | | | | | |
|---|---|---|---|---|---|---|
| HW State | Compliance Method | PPM | Leak? Y/N | Work Order # | Retest Date | Leak Fixed? |
| Light Liquid | Monitor if evidence of leak | | | | | |
| Light Liquid | Monitor if evidence of leak | | | | | |
| Light Liquid | Monitor if evidence of leak | | | | | |
| Light Liquid | Monthly LDAR | | | | | |
| Light Liquid | Monitor if evidence of leak | | | | | |
| Light Liquid | Monitor if evidence of leak | | | | | |
| Light Liquid | Monitor if evidence of leak | | | | | |
| Light Liquid | Monthly LDAR | | | | | |
| Light Liquid | Monitor if evidence of leak | | | | | |
| Light Liquid | Monitor if evidence of leak | | | | | |
| Light Liquid | Monitor if evidence of leak | | | | | |
| Light Liquid | Monitor if evidence of leak | | | | | |
| Light Liquid | Monitor if evidence of leak | | | | | |
| Light Liquid | Monthly LDAR | | | | | |
| Light Liquid | Monitor if evidence of leak | | | | | |
| Light Liquid | Monitor if evidence of leak | | | | | |
| Light Liquid | Monitor if evidence of leak | | | | | |
| Light Liquid | Monitor if evidence of leak | | | | | |
| Light Liquid | Monitor if evidence of leak | | | | | |
| Light Liquid | Monitor if evidence of leak | | | | | |
| Light Liquid | Monthly LDAR | | | | | |
| Light Liquid | Monitor if evidence of leak | | | | | |
| Light Liquid | Monitor if evidence of leak | | | | | |
| Light Liquid | Monitor if evidence of leak | | | | | |
| Light Liquid | Monitor if evidence of leak | | | | | |
| Light Liquid | Monitor if evidence of leak | | | | | |
| Light Liquid | Monitor if evidence of leak | | | | | |
| Light Liquid | Monitor if evidence of leak | | | | | |
| Light Liquid | No detectable emissions | | | | | |
| Light Liquid | Monitor if evidence of leak | | | | | |
| Light Liquid | Monitor if evidence of leak | | | | | |
| Light Liquid | Monitor if evidence of leak | | | | | |
| Light Liquid | Monitor if evidence of leak | | | | | |

US EPA ARCHIVE DOCUMENT

# Thin Film Evaporator Inspection

| und reading: 0.0 | | | | | | |
|---|---|---|---|---|---|---|
| HW State | Compliance Method | PPM | Leak? Y/N | Work Order # | Retest Date | Leak Fixed? |
| Light Liquid | Monitor if evidence of leak | | | | | |
| Light Liquid | Monitor if evidence of leak | | | | | |
| Light Liquid | Monitor if evidence of leak | | | | | |
| Light Liquid | Monthly LDAR | | | | | |
| Light Liquid | Monitor if evidence of leak | | | | | |
| Light Liquid | Monitor if evidence of leak | | | | | |
| Light Liquid | Monitor if evidence of leak | | | | | |
| Light Liquid | Monitor if evidence of leak | | | | | |
| Light Liquid | Monitor if evidence of leak | | | | | |
| Light Liquid | Monthly LDAR | | | | | |
| Light Liquid | Monitor if evidence of leak | | | | | |
| Light Liquid | Monitor if evidence of leak | | | | | |
| Light Liquid | Monitor if evidence of leak | | | | | |
| Light Liquid | Monitor if evidence of leak | | | | | |
| Light Liquid | Monitor if evidence of leak | | | | | |
| Light Liquid | Monitor if evidence of leak | | | | | |
| Light Liquid | Monitor if evidence of leak | | | | | |
| Light Liquid | Monitor if evidence of leak | | | | | |
| Light Liquid | Monthly LDAR | | | | | |
| Light Liquid | Monitor if evidence of leak | | | | | |
| Light Liquid | Monitor if evidence of leak | | | | | |
| Light Liquid | Monitor if evidence of leak | | | | | |
| Light Liquid | Monthly LDAR | | | | | |
| Light Liquid | Monitor if evidence of leak | | | | | |
| Light Liquid | Monitor if evidence of leak | | | | | |
| Light Liquid | Monitor if evidence of leak | | | | | |
| Light Liquid | Monitor if evidence of leak | | | | | |
| Light Liquid | Monitor if evidence of leak | | | | | |
| Light Liquid | Monitor if evidence of leak | | | | | |
| Light Liquid | Monitor if evidence of leak | | | | | |
| Light Liquid | Monitor if evidence of leak | | | | | |
| Light Liquid | Monitor if evidence of leak | | | | | |
| Light Liquid | Monitor if evidence of leak | | | | | |

US EPA ARCHIVE DOCUMENT

# Thin Film Evaporator Inspection

| und reading: 0.0 | | | | | | |
|---|---|---|---|---|---|---|
| HW State | Compliance Method | PPM | Leak? Y/N | Work Order # | Retest Date | Leak Fixed? |
| Light Liquid | Monitor if evidence of leak | | | | | |
| Light Liquid | Monitor if evidence of leak | | | | | |
| Light Liquid | Monitor if evidence of leak | | | | | |
| Light Liquid | Monitor if evidence of leak | | | | | |
| Light Liquid | Monitor if evidence of leak | | | | | |
| Light Liquid | Monitor if evidence of leak | | | | | |
| Light Liquid | Monitor if evidence of leak | | | | | |
| Light Liquid | Monitor if evidence of leak | | | | | |
| Light Liquid | Monitor if evidence of leak | | | | | |
| Light Liquid | Monitor if evidence of leak | | | | | |
| Light Liquid | Monthly LDAR | | | | | |
| Light Liquid | Monitor if evidence of leak | | | | | |
| Light Liquid | Monitor if evidence of leak | | | | | |
| Light Liquid | Monitor if evidence of leak | | | | | |
| Light Liquid | Monitor if evidence of leak | | | | | |
| Light Liquid | Monitor if evidence of leak | | | | | |
| Light Liquid | Monitor if evidence of leak | | | | | |
| Light Liquid | Monitor if evidence of leak | | | | | |
| Light Liquid | Monitor if evidence of leak | | | | | |
| Light Liquid | Monitor if evidence of leak | | | | | |
| Light Liquid | Monitor if evidence of leak | | | | | |
| Light Liquid | Monitor if evidence of leak | | | | | |
| Light Liquid | Monitor if evidence of leak | | | | | |
| Light Liquid | Monitor if evidence of leak | | | | | |
| Light Liquid | Monitor if evidence of leak | | | | | |
| Light Liquid | Monitor if evidence of leak | | | | | |
| Light Liquid | Monitor if evidence of leak | | | | | |
| Light Liquid | Monitor if evidence of leak | | | | | |
| Light Liquid | Monitor if evidence of leak | | | | | |
| Light Liquid | Monitor if evidence of leak | | | | | |
| Light Liquid | Monitor if evidence of leak | | | | | |

US EPA ARCHIVE DOCUMENT

# Thin Film Evaporator Inspection

| und reading: 0.0 | | | | | | |
|---|---|---|---|---|---|---|
| HW State | Compliance Method | PPM | Leak? Y/N | Work Order # | Retest Date | Leak Fixed? |
| Light Liquid | Monitor if evidence of leak | | | | | |
| Light Liquid | Monitor if evidence of leak | | | | | |
| Light Liquid | Monitor if evidence of leak | | | | | |
| Light Liquid | Monitor if evidence of leak | | | | | |
| Light Liquid | Monitor if evidence of leak | | | | | |
| Light Liquid | Monitor if evidence of leak | | | | | |
| Light Liquid | Monitor if evidence of leak | | | | | |
| Light Liquid | Monitor if evidence of leak | | | | | |
| Light Liquid | Monitor if evidence of leak | | | | | |
| Light Liquid | Monitor if evidence of leak | | | | | |
| Light Liquid | Monitor if evidence of leak | | | | | |
| Light Liquid | Monitor if evidence of leak | | | | | |
| Light Liquid | Monitor if evidence of leak | | | | | |
| Light Liquid | Monitor if evidence of leak | | | | | |
| Light Liquid | Monitor if evidence of leak | | | | | |
| Light Liquid | Monthly LDAR | | | | | |
| Light Liquid | Monitor if evidence of leak | | | | | |
| Light Liquid | Monitor if evidence of leak | | | | | |
| Light Liquid | Monitor if evidence of leak | | | | | |
| Light Liquid | Monitor if evidence of leak | | | | | |
| | | | | | | |
| | green = no leaks | | | | | |
| | red = leak detected | | | | | |

US EPA ARCHIVE DOCUMENT

# Vacuum Pot Inspection

| | Vacuum Pot | | | Date monitored: 02 September 04 | Stoddard Solvent | PID background reading | |
|---|---|---|---|---|---|---|---|
| **Label** | **COMPONENT/Line** | **Sequence #** | **Pipe Type** | **Description/Note** | **Equip Type** | **Organics** | **HW State** |
| S | VP to VPT | 1 | FL | FL to Tee for VPT | Flange | > 10 (w/w) | Gas/Vapor |
| S | VP to VPT | 2 | FL | VPT | Flange | > 10 (w/w) | Gas/Vapor |
| S | VP to VPT | 3 | FL | 2" Blind Flange opposite of VPT on Tee | Flange | > 10 (w/w) | Gas/Vapor |
| S | VP to VPT | 4 | Tee | | Other connector | > 10 (w/w) | Gas/Vapor |
| S | VP to VPT | 5 | VPT | | Other connector | > 10 (w/w) | Gas/Vapor |
| T | VP Top | 1 | CAP | Connection for Upper PDT | Other connector | > 10 (w/w) | Gas/Vapor |
| T | VP Top | 2 | CAP | Connection for Lower PDT | Other connector | > 10 (w/w) | Gas/Vapor |
| T | VP Top | 3 | TP | For VPG, south side, 3/4" Threaded Outlet | Other connector | > 10 (w/w) | Gas/Vapor |
| T | VP Top | 4 | Coupling | For VPG, south side, | Other connector | > 10 (w/w) | Gas/Vapor |
| T | VP Top | 5 | Bushing | For VPG, south side, 3/4" x 1/4" | Other connector | > 10 (w/w) | Gas/Vapor |
| T | VP Top | 6 | VPG | Vacuum Pressure Gauge | Other connector | > 10 (w/w) | Gas/Vapor |
| T | VP Top | 7 | CAP | Blind Flange Center of Top, 19"OD | Flange | > 10 (w/w) | Gas/Vapor |
| T | VP Top | 8 | CAP | Manway on SE | Flange | > 10 (w/w) | Gas/Vapor |
| T | VP Top | 9 | SG | 2" Flange | Other connector | > 10 (w/w) | Gas/Vapor |
| T | VP Top | 10 | SG | 4" Flange | Other connector | > 10 (w/w) | Gas/Vapor |
| T | VP Top | 11 | FL | Pressure Relief Valve | Flange | > 10 (w/w) | Gas/Vapor |
| T | VP Top | 12 | FL | Threaded for Steam Connection | Flange | > 10 (w/w) | Gas/Vapor |
| T | VP Top | 13 | NIP | 1" | Other connector | > 10 (w/w) | Gas/Vapor |
| T | VP Top | 14 | VALVE | | Valve in gas/vapor service | > 10 (w/w) | Gas/Vapor |
| T | VP Top | 15 | NIP | 1" | Other connector | > 10 (w/w) | Gas/Vapor |
| T | VP Top | 16 | SQRF | | Other connector | > 10 (w/w) | Gas/Vapor |
| T | VP Top | 17 | Bushing | For PRV | Other connector | > 10 (w/w) | Gas/Vapor |
| T | VP Top | 18 | PRV | Pressure Relief Valve | Pressure relief devices | > 10 (w/w) | Gas/Vapor |
| T | VP Top | 19 | Pipe | For PRV, 3"L, 3"OD | Other connector | > 10 (w/w) | Gas/Vapor |
| T | VP Top | 20 | 90 | For PRV | Other connector | > 10 (w/w) | Gas/Vapor |
| T | VP Top | 21 | Pipe | For PRV, up | Other connector | > 10 (w/w) | Gas/Vapor |
| T | VP Top | 22 | Vent | For PRV, open (hat) | Other connector | > 10 (w/w) | Gas/Vapor |
| U | VP/Lower Platform | 1 | Bushing | 1" x 1/4" just above platform on NW | Other connector | > 10 (w/w) | Light Liquid |
| U | VP/Lower Platform | 2 | CAP | 1/4" Plug | Other connector | > 10 (w/w) | Light Liquid |
| U | VP/Lower Platform | 3 | FL | Upper PDT, southwest top VP | Flange | > 10 (w/w) | Light Liquid |
| U | VP/Lower Platform | 4 | FL | Lower PDT, southwest middle VP | Flange | > 10 (w/w) | Light Liquid |
| U | VP/Lower Platform | 5 | Pipe | Outlet Connection for Upper T | Other connector | > 10 (w/w) | Light Liquid |
| U | VP/Lower Platform | 6 | FL | FL with coupling for TG, south VP | Flange | > 10 (w/w) | Light Liquid |

US EPA ARCHIVE DOCUMENT

# Vacuum Pot Inspection

| | Vacuum Pot | | | Date monitored: 02 September 04 | Stoddard Solvent | PID background reading | |
|---|---|---|---|---|---|---|---|
| **Label** | **COMPONENT/Line** | **Sequence #** | **Pipe Type** | **Description/Note** | **Equip Type** | **Organics** | **HW State** |
| U | VP/Lower Platform | 7 | TG | Temperature Guage, south VP | Other connector | > 10 (w/w) | Light Liquid |
| U | VP/Lower Platform | 8 | FL | Temperature Transmitter, south | Flange | > 10 (w/w) | Light Liquid |
| U | VP/Lower Platform | 9 | FL | Outlet for Upper Side Sample Valve | Flange | > 10 (w/w) | Light Liquid |
| U | VP/Lower Platform | 10 | FL | Threaded | Flange | > 10 (w/w) | Light Liquid |
| U | VP/Lower Platform | 11 | Bushing | 1" x 1/4" | Other connector | > 10 (w/w) | Light Liquid |
| U | VP/Lower Platform | 12 | NIP | 1" | Other connector | > 10 (w/w) | Light Liquid |
| U | VP/Lower Platform | 13 | 90 | Female Threads x Male Threads | Other connector | > 10 (w/w) | Light Liquid |
| U | VP/Lower Platform | 14 | SV | Sample Valve | Valve in light liquid service | > 10 (w/w) | Light Liquid |
| U | VP/Lower Platform | 15 | NIP | 1" | Other connector | > 10 (w/w) | Light Liquid |
| U | VP/Lower Platform | 16 | FL | Outlet for Lower Side Sample Valve | Flange | > 10 (w/w) | Light Liquid |
| U | VP/Lower Platform | 17 | FL | Threaded | Flange | > 10 (w/w) | Light Liquid |
| U | VP/Lower Platform | 18 | Bushing | 1" x 1/4" | Other connector | > 10 (w/w) | Light Liquid |
| U | VP/Lower Platform | 19 | 90 | Male Threads x Female Threads | Other connector | > 10 (w/w) | Light Liquid |
| U | VP/Lower Platform | 20 | NIP | 1/2" | Other connector | > 10 (w/w) | Light Liquid |
| U | VP/Lower Platform | 21 | SV | | Other connector | > 10 (w/w) | Light Liquid |
| U | VP/Lower Platform | 22 | AF | out of SV | Other connector | > 10 (w/w) | Light Liquid |
| U | VP/Lower Platform | 23 | FL | Lower Temperature Guage | Flange | > 10 (w/w) | Light Liquid |
| U | VP/Lower Platform | 24 | Coupling | Coupling for TG | Other connector | > 10 (w/w) | Light Liquid |
| U | VP/Lower Platform | 25 | TG | Temperature Guage | Other connector | > 10 (w/w) | Light Liquid |
| U | VP/Lower Platform | 26 | Bushing | South VP | Other connector | > 10 (w/w) | Light Liquid |
| U | VP/Lower Platform | 27 | Bushing | South VP | Other connector | > 10 (w/w) | Light Liquid |
| U | VP/Lower Platform | 28 | NIP | South VP | Other connector | > 10 (w/w) | Light Liquid |
| U | VP/Lower Platform | 29 | UNION | South VP | Other connector | > 10 (w/w) | Light Liquid |
| U | VP/Lower Platform | 30 | NIP | South VP | Other connector | > 10 (w/w) | Light Liquid |
| U | VP/Lower Platform | 31 | TT | South VP, Temperature Transmitter | Other connector | > 10 (w/w) | Light Liquid |
| U | VP/Lower Platform | 32 | PDT | | Other connector | > 10 (w/w) | Light Liquid |
| V | VP/SG | 1 | Plug | In Top of Sight Glass Valve | Other connector | > 10 (w/w) | Light Liquid |
| V | VP/SG | 2 | VALVE | Top of Sight Glass | Valve in light liquid service | > 10 (w/w) | Light Liquid |
| V | VP/SG | 3 | VALVE | Bottom of Sight Glass | Valve in light liquid service | > 10 (w/w) | Light Liquid |
| V | VP/SG | 4 | NIP | 1/2" from Bottom of Sight Glass Valve | Other connector | > 10 (w/w) | Light Liquid |
| V | VP/SG | 5 | SV | | Other connector | > 10 (w/w) | Light Liquid |
| V | VP/SG | 6 | NIP | 1" | Other connector | > 10 (w/w) | Light Liquid |
| W | VP/Bottom | 1 | FL | Bottom Outlet | Flange | > 10 (w/w) | Light Liquid |

US EPA ARCHIVE DOCUMENT

# Vacuum Pot Inspection

| | Vacuum Pot | | | Date monitored: 02 September 04 | Stoddard Solvent | PID background reading | |
|---|---|---|---|---|---|---|---|
| **Label** | **COMPONENT/Line** | **Sequence #** | **Pipe Type** | **Description/Note** | **Equip Type** | **Organics** | **HW State** |
| W | VP/Bottom | 2 | Reducer | 6" x 4" | Other connector | > 10 (w/w) | Light Liquid |
| W | VP/Bottom | 3 | VALVE | # 4 | Valve in light liquid service | > 10 (w/w) | Light Liquid |
| W | VP/Bottom | 4 | FL | Bottom blind flange | Flange | > 10 (w/w) | Light Liquid |
| W | VP/Bottom | 5 | FL | Top of valve W3, bottom reducer | Flange | > 10 (w/w) | Light Liquid |
| W | VP/Bottom | 6 | Pipe | 6"OD from bottom VP | Other connector | > 10 (w/w) | Light Liquid |
| X | VP/T Fill | 1 | Pipe | Top Fill Inlet | Other connector | > 10 (w/w) | Light Liquid |
| X | VP/T Fill | 2 | FL | Threaded | Flange | > 10 (w/w) | Light Liquid |
| X | VP/T Fill | 3 | TP | 4" up | Other connector | > 10 (w/w) | Light Liquid |
| X | VP/T Fill | 4 | 90 | | Other connector | > 10 (w/w) | Light Liquid |
| X | VP/T Fill | 5 | TP | 3' into side of 2" 3-Way Tee Valve (# 6) | Other connector | > 10 (w/w) | Light Liquid |
| X | VP/T Fill | 6 | VALVE | 2" 3-Way Tee Valve | Valve in light liquid service | > 10 (w/w) | Light Liquid |
| X | VP/T Fill | 7 | FL | Threaded, In Top Inlet Line from Tank 124 18" above 2" 3-Way Tee Valve (#6) | Flange | > 10 (w/w) | Light Liquid |
| X | VP/T Fill | 8 | TP | 18" into top of 2" 3-Way Tee Valve (# 6) | Other connector | > 10 (w/w) | Light Liquid |
| X | VP/T Fill | 9 | Pipe | Threads from bottom of 2" 3-Way Tee Valve (# 6) welded to 8' pipe, socket coupling, and ending with a FL with connects to top of Top vs. Bottom Fill Valve | Other connector | > 10 (w/w) | Light Liquid |
| X | VP/T Fill | 10 | VALVE | Top vs. Bottom Fill Valve | Valve in light liquid service | > 10 (w/w) | Light Liquid |
| X | VP/T Fill | 11 | FL | To Bottom of Top vs. Bottom Fill Valve | Flange | > 10 (w/w) | Light Liquid |
| X | VP/T Fill | 12 | FL | top of valve Y9 | Flange | | Light Liquid |
| Y | VP/Bottom Fill | 1 | FL | Connected to Valve # 5 | Flange | > 10 (w/w) | Light Liquid |
| Y | VP/Bottom Fill | 2 | VALVE | | Valve in light liquid service | > 10 (w/w) | Light Liquid |
| Y | VP/Bottom Fill | 3 | FL | Threaded, Connected to Valve Y2 | Flange | > 10 (w/w) | Light Liquid |
| Y | VP/Bottom Fill | 4 | NIP | 2" | Other connector | > 10 (w/w) | Light Liquid |
| Y | VP/Bottom Fill | 5 | Y | | Other connector | > 10 (w/w) | Light Liquid |
| Y | VP/Bottom Fill | 6 | NIP | from Y heading 45 down | Other connector | > 10 (w/w) | Light Liquid |
| Y | VP/Bottom Fill | 7 | Camlock | | Other connector | > 10 (w/w) | Light Liquid |
| Y | VP/Bottom Fill | 8 | Pipe | Threads North from Y ending in a flange | Other connector | > 10 (w/w) | Light Liquid |
| Y | VP/Bottom Fill | 9 | VALVE | Outside Bottom Fill Valve | Valve in light liquid service | > 10 (w/w) | Light Liquid |
| Y | VP/Bottom Fill | 10 | Pipe | FL to Tee connecting up to # 12 of T Fill and down and around to East & West Troughs | Other connector | > 10 (w/w) | Light Liquid |
| Y | VP/Bottom Fill | 11 | FL | South Valve Y9 | Flange | > 10 (w/w) | Light Liquid |

US EPA ARCHIVE DOCUMENT

# Vacuum Pot Inspection

| | Vacuum Pot | | | Date monitored: 02 September 04 | Stoddard Solvent | PID background reading | |
|---|---|---|---|---|---|---|---|
| **Label** | **COMPONENT/Line** | **Sequence #** | **Pipe Type** | **Description/Note** | **Equip Type** | **Organics** | **HW State** |
| Y | VP/Bottom Fill | 12 | FL | North Valve Y9 | Flange | > 10 (w/w) | Light Liquid |
| Z | VP-HE/Liquid | 1 | Pipe | VP Outlet, 90 down | Other connector | > 10 (w/w) | Light Liquid |
| Z | VP-HE/Liquid | 2 | FL | 4" Line down to 3-Way Valve | Flange | > 10 (w/w) | Light Liquid |
| Z | VP-HE/Liquid | 3 | Bushing | 1/2" x 1/4" for VPG | Other connector | > 10 (w/w) | Light Liquid |
| Z | VP-HE/Liquid | 4 | VPG | Vacuum Pressure Guage | Other connector | > 10 (w/w) | Light Liquid |
| Z | VP-HE/Liquid | 5 | FL | 4" into Top of 3-Way Tee Valve | Flange | > 10 (w/w) | Light Liquid |
| Z | VP-HE/Liquid | 6 | FL | 4" 3-Way Tee Valve Flush In Line Connection, sou | Flange | > 10 (w/w) | Light Liquid |
| Z | VP-HE/Liquid | 7 | FL | 4" out of 3-Way Tee Valve, north | Flange | > 10 (w/w) | Light Liquid |
| Z | VP-HE/Liquid | 8 | FL | Flex Joint Into Pump, south | Flange | > 10 (w/w) | Light Liquid |
| Z | VP-HE/Liquid | 9 | FL | Flex Joint Into Pump, north | Flange | > 10 (w/w) | Light Liquid |
| Z | VP-HE/Liquid | 10 | P | Pump | Pump in light liquid service | > 10 (w/w) | Light Liquid |
| Z | VP-HE/Liquid | 11 | FL | Flex Joint Out of Pump, bottom | Flange | > 10 (w/w) | Light Liquid |
| Z | VP-HE/Liquid | 12 | FL | Flex Joint Out of Pump, top | Flange | > 10 (w/w) | Light Liquid |
| Z | VP-HE/Liquid | 13 | Bushing | for VPG, 1/2" x 1/4" for VPG | Other connector | > 10 (w/w) | Light Liquid |
| Z | VP-HE/Liquid | 14 | VPG | Vacuum Pressure Guage | Other connector | > 10 (w/w) | Light Liquid |
| Z | VP-HE/Liquid | 15 | Pipe | Connects to HE Inlet, holds VPG Z14 | Other connector | > 10 (w/w) | Light Liquid |
| Z | VP-HE/Liquid | 16 | FL | HE Inlet | Flange | > 10 (w/w) | Light Liquid |
| E | HE | 1 | FL | HE In End Cap | Flange | > 10 (w/w) | Light Liquid |
| E | HE | 2 | TP | 3" drain from In End Cap | Other connector | > 10 (w/w) | Light Liquid |
| E | HE | 3 | VALVE | | Valve in light liquid service | > 10 (w/w) | Light Liquid |
| E | HE | 4 | NIP | 2" | Other connector | > 10 (w/w) | Light Liquid |
| E | HE | 5 | Camlock | | Open-ended valve or line | > 10 (w/w) | Light Liquid |
| E | HE | 6 | FL | HE Out End Cap, west | Flange | > 10 (w/w) | Light Liquid |
| E | HE | 7 | Coupling | South out of Out End Cap for TG | Other connector | > 10 (w/w) | Light Liquid |
| E | HE | 8 | TG | Temperature Guage | Other connector | > 10 (w/w) | Light Liquid |
| E | HE | 9 | TP | 3" drain from Out End Cap | Other connector | > 10 (w/w) | Light Liquid |
| E | HE | 10 | VALVE | | Valve in light liquid service | > 10 (w/w) | Light Liquid |
| E | HE | 11 | NIP | 3" | Other connector | > 10 (w/w) | Light Liquid |
| E | HE | 12 | Camlock | | Other connector | > 10 (w/w) | Light Liquid |
| H | HE-VP/Mix | 1 | FL | Heat Exchanger Out | Flange | > 10 (w/w) | Light Liquid |
| H | HE-VP/Mix | 2 | FL | 2" into Bottom of 3-Way Tee Valve, bottom | Flange | > 10 (w/w) | Light Liquid |
| H | HE-VP/Mix | 3 | VALVE | 2" 3-Way Tee Valve Flush Out Line Connection | Valve in light liquid service | > 10 (w/w) | Light Liquid |
| H | HE-VP/Mix | 4 | FL | 2" out of 3-Way Tee Valve, top | Flange | > 10 (w/w) | Light Liquid |

US EPA ARCHIVE DOCUMENT

# Vacuum Pot Inspection

| | Vacuum Pot | | | Date monitored: 02 September 04 | Stoddard Solvent | PID background reading | |
|---|---|---|---|---|---|---|---|
| **Label** | **COMPONENT/Line** | **Sequence #** | **Pipe Type** | **Description/Note** | **Equip Type** | **Organics** | **HW State** |
| H | HE-VP/Mix | 5 | Coupling | for PG | Other connector | > 10 (w/w) | Light Liquid |
| H | HE-VP/Mix | 6 | Bushing | for PG | Other connector | > 10 (w/w) | Light Liquid |
| H | HE-VP/Mix | 7 | 90 | for PG | Other connector | > 10 (w/w) | Light Liquid |
| H | HE-VP/Mix | 8 | PG | for PG | Other connector | > 10 (w/w) | Light Liquid |
| H | HE-VP/Mix | 9 | Pipe | Holds PG 16"L | Other connector | > 10 (w/w) | Light Liquid |
| H | HE-VP/Mix | 10 | Pipe | 90 bend to VP from FLH4 | Other connector | > 10 (w/w) | Light Liquid |
| F | HE/Flush In | 1 | Camlock | for connection from bottom of flush tank tote | Other connector | > 10 (w/w) | Light Liquid |
| F | HE/Flush In | 2 | NIP | 1" | Other connector | > 10 (w/w) | Light Liquid |
| F | HE/Flush In | 3 | TP | 8.5' West | Other connector | > 10 (w/w) | Light Liquid |
| F | HE/Flush In | 4 | FL | threaded | Flange | > 10 (w/w) | Light Liquid |
| F | HE/Flush In | 5 | Multi | FL, 6" pipe, 90 south, 4.5' pipe, 90 west, 20" pipe | Other connector | > 10 (w/w) | Light Liquid |
| F | HE/Flush In | 6 | UNION | | Other connector | > 10 (w/w) | Light Liquid |
| F | HE/Flush In | 7 | NIP | 2" | Other connector | > 10 (w/w) | Light Liquid |
| F | HE/Flush In | 8 | VALVE | | Valve in light liquid service | > 10 (w/w) | Light Liquid |
| F | HE/Flush In | 9 | NIP | 2" | Other connector | > 10 (w/w) | Light Liquid |
| G | HE/Flush Out | 1 | FL | threaded, connecting from side of 2" 3-Way Tee V | Flange | > 10 (w/w) | Light Liquid |
| G | HE/Flush Out | 2 | TP | 6" | Other connector | > 10 (w/w) | Light Liquid |
| G | HE/Flush Out | 3 | 90 | down | Other connector | > 10 (w/w) | Light Liquid |
| G | HE/Flush Out | 4 | TP | 20" down into Tee (# 5) | Other connector | > 10 (w/w) | Light Liquid |
| G | HE/Flush Out | 5 | Tee | | Other connector | > 10 (w/w) | Light Liquid |
| G | HE/Flush Out | 6 | Bushing | 2" x 1/2" West from Tee (# 5) | Other connector | > 10 (w/w) | Light Liquid |
| G | HE/Flush Out | 7 | Plug | | Other connector | > 10 (w/w) | Light Liquid |
| G | HE/Flush Out | 8 | Pipe | TP 6' to welded 90 down 6" to threads | Other connector | > 10 (w/w) | Light Liquid |
| G | HE/Flush Out | 9 | FL | threaded | Flange | > 10 (w/w) | Light Liquid |
| G | HE/Flush Out | 10 | Pipe | FL, 20" pipe down, 90 East, 20" pipe, FL | Other connector | > 10 (w/w) | Light Liquid |
| G | HE/Flush Out | 11 | FL | threaded | Flange | > 10 (w/w) | Light Liquid |
| G | HE/Flush Out | 12 | TP | 8' | Other connector | > 10 (w/w) | Light Liquid |
| G | HE/Flush Out | 13 | VALVE | | Valve in light liquid service | > 10 (w/w) | Light Liquid |
| G | HE/Flush Out | 14 | NIP | 3" | Other connector | > 10 (w/w) | Light Liquid |
| G | HE/Flush Out | 15 | Camlock | for connection to top of flush tank tote | Other connector | > 10 (w/w) | Light Liquid |
| AA | VP-CYC/Vapor | 1 | FL | VP Outlet Connection | Flange | > 10 (w/w) | Gas/Vapor |
| AA | VP-CYC/Vapor | 2 | FL | Cyclone Inlet Connection | Flange | > 10 (w/w) | Gas/Vapor |
| C | CYC | 1 | SG | Sight Glass on lower South side | Other connector | > 10 (w/w) | Gas/Vapor |

US EPA ARCHIVE DOCUMENT

# Vacuum Pot Inspection

| | Vacuum Pot | | | Date monitored: 02 September 04 | Stoddard Solvent | PID background reading | |
|---|---|---|---|---|---|---|---|
| **Label** | **COMPONENT/Line** | **Sequence #** | **Pipe Type** | **Description/Note** | **Equip Type** | **Organics** | **HW State** |
| AB | CYC-VP/Drain | 1 | FL | Bottom Outlet of Cyclone | Flange | > 10 (w/w) | Light Liquid |
| AB | CYC-VP/Drain | 2 | FL | on end of welded U-shaped pipe | Flange | > 10 (w/w) | Light Liquid |
| AB | CYC-VP/Drain | 3 | FL | on other end of welded U-shaped pipe | Flange | > 10 (w/w) | Light Liquid |
| AB | CYC-VP/Drain | 4 | FL | on VP | Flange | > 10 (w/w) | Light Liquid |
| AB | CYC-VP/Drain | 5 | FL | on bottom of U-shaped pipe | Flange | > 10 (w/w) | Light Liquid |
| AB | CYC-VP/Drain | 6 | FL | Threaded | Flange | > 10 (w/w) | Light Liquid |
| AB | CYC-VP/Drain | 7 | Bushing | 2" x 1" | Other connector | > 10 (w/w) | Light Liquid |
| AB | CYC-VP/Drain | 8 | NIP | 3" | Other connector | > 10 (w/w) | Light Liquid |
| AB | CYC-VP/Drain | 9 | 45 | NW and 45 down | Other connector | > 10 (w/w) | Light Liquid |
| AB | CYC-VP/Drain | 10 | TP | 18" | Other connector | > 10 (w/w) | Light Liquid |
| AB | CYC-VP/Drain | 11 | 45 | down | Other connector | > 10 (w/w) | Light Liquid |
| AB | CYC-VP/Drain | 12 | TP | 12" | Other connector | > 10 (w/w) | Light Liquid |
| AB | CYC-VP/Drain | 13 | Coupling | | Other connector | > 10 (w/w) | Light Liquid |
| AB | CYC-VP/Drain | 14 | TP | 30" | Other connector | > 10 (w/w) | Light Liquid |
| AB | CYC-VP/Drain | 15 | VALVE | | Valve in light liquid service | > 10 (w/w) | Light Liquid |
| AB | CYC-VP/Drain | 16 | NIP | 2" | Other connector | > 10 (w/w) | Light Liquid |
| AB | CYC-VP/Drain | 17 | Coupling | | Other connector | > 10 (w/w) | Light Liquid |
| AB | CYC-VP/Drain | 18 | Camlock | Male | Other connector | > 10 (w/w) | Light Liquid |
| AB | CYC-VP/Drain | 19 | Camlock | Female with Hose Barb and Hose | Other connector | > 10 (w/w) | Light Liquid |
| D | CYC-COND/Vapor | 1 | FL | From Cyclone | Flange | > 10 (w/w) | Gas/Vapor |
| D | CYC-COND/Vapor | 2 | FL | Into Condenser | Flange | > 10 (w/w) | Gas/Vapor |
| A | COND | 1 | FL | Top Blind Flange | Flange | > 10 (w/w) | Light Liquid |
| B | COND-SG/Condensate | 1 | FL | Out | Flange | > 10 (w/w) | Light Liquid |
| B | COND-SG/Condensate | 2 | Bushing | For sample valve, 1/2" x 1/4" for SV | Other connector | > 10 (w/w) | Light Liquid |
| B | COND-SG/Condensate | 3 | SV | Sample Valve | Valve in light liquid service | > 10 (w/w) | Light Liquid |
| B | COND-SG/Condensate | 4 | NIP | For sample valve, 2" with Stopper | Other connector | > 10 (w/w) | Light Liquid |
| B | COND-SG/Condensate | 5 | Bushing | 3/4" x 1/2" for TG | Other connector | > 10 (w/w) | Light Liquid |
| B | COND-SG/Condensate | 6 | TG | Temperature Guage | Other connector | > 10 (w/w) | Light Liquid |
| B | COND-SG/Condensate | 7 | FL | Top to Sight Glass | Flange | > 10 (w/w) | Light Liquid |
| B | COND-SG/Condensate | 8 | FL | Front of Sight Glass | Flange | > 10 (w/w) | Light Liquid |
| B | COND-SG/Condensate | 9 | FL | Back of Sight Glass | Flange | > 10 (w/w) | Light Liquid |
| B | COND-SG/Condensate | 10 | FL | Bottom from Sight Glass | Flange | > 10 (w/w) | Light Liquid |
| B | COND-SG/Condensate | 11 | FL | Flange on end of welded pipe connecting to S1 & | Flange | > 10 (w/w) | Light Liquid |

US EPA ARCHIVE DOCUMENT

# Vacuum Pot Inspection

| | Vacuum Pot | | | Date monitored: 02 September 04 | Stoddard Solvent | PID background reading | |
|---|---|---|---|---|---|---|---|
| **Label** | **COMPONENT/Line** | **Sequence #** | **Pipe Type** | **Description/Note** | **Equip Type** | **Organics** | **HW State** |
| B | COND-SG/Condensate | 12 | Pipe | 2"OD product out of condenser | Other connector | > 10 (w/w) | Light Liquid |
| B | COND-SG/Condensate | 13 | 90 | down-east bottom FLB1 | Other connector | > 10 (w/w) | Light Liquid |
| B | COND-SG/Condensate | 14 | Pipe | across west-east | Other connector | > 10 (w/w) | Light Liquid |
| B | COND-SG/Condensate | 15 | 90 | east- south | Other connector | > 10 (w/w) | Light Liquid |
| B | COND-SG/Condensate | 16 | Pipe | north-south | Other connector | > 10 (w/w) | Light Liquid |
| B | COND-SG/Condensate | 17 | 90 | down | Other connector | > 10 (w/w) | Light Liquid |
| B | COND-SG/Condensate | 18 | Pipe | holds TG | Other connector | > 10 (w/w) | Light Liquid |
| B | COND-SG/Condensate | 19 | Cross | sighgt glasses between | Other connector | > 10 (w/w) | Light Liquid |
| B | COND-SG/Condensate | 20 | Tee | bottom FL B10 | Other connector | > 10 (w/w) | Light Liquid |
| B | COND-SG/Condensate | 21 | Pipe | connects S1 and S2 | Other connector | > 10 (w/w) | Light Liquid |
| B | COND-SG/Condensate | 22 | 90 | down to S1 | Other connector | > 10 (w/w) | Light Liquid |
| M | S1/Condensate In | 1 | FL | Into Valve M2 | Flange | > 10 (w/w) | Light Liquid |
| M | S1/Condensate In | 2 | VALVE | | Valve in light liquid service | > 10 (w/w) | Light Liquid |
| M | S1/Condensate In | 3 | FL | Condensate Inlet | Flange | > 10 (w/w) | Light Liquid |
| N | S2/Condensate In | 1 | FL | Into Valve N2 | Flange | > 10 (w/w) | Light Liquid |
| N | S2/Condensate In | 2 | VALVE | | Valve in light liquid service | > 10 (w/w) | Light Liquid |
| N | S2/Condensate In | 3 | FL | Condensate Inlet | Flange | > 10 (w/w) | Light Liquid |
| P | S1-PF/Vapor | 1 | FL | Out to Valve P2 | Flange | > 10 (w/w) | Gas/Vapor |
| P | S1-PF/Vapor | 2 | VALVE | | Valve in gas/vapor service | > 10 (w/w) | Gas/Vapor |
| P | S1-PF/Vapor | 3 | FL | Connected to Valve P2 | Flange | > 10 (w/w) | Gas/Vapor |
| P | S1-PF/Vapor | 4 | TP | 5" | Other connector | > 10 (w/w) | Gas/Vapor |
| P | S1-PF/Vapor | 5 | 90 | | Other connector | > 10 (w/w) | Gas/Vapor |
| P | S1-PF/Vapor | 6 | TP | 6' | Other connector | > 10 (w/w) | Gas/Vapor |
| AC | S2-PF/Vapor | 1 | FL | Out to Valve # 6a | Flange | > 10 (w/w) | Gas/Vapor |
| AC | S2-PF/Vapor | 2 | VALVE | # 6a | Valve in gas/vapor service | > 10 (w/w) | Gas/Vapor |
| AC | S2-PF/Vapor | 3 | FL | Connected to Valve # 6a | Flange | > 10 (w/w) | Gas/Vapor |
| AC | S2-PF/Vapor | 4 | TP | 5" | Other connector | > 10 (w/w) | Gas/Vapor |
| I | PF/Vapor In | 1 | TEE | Connection from S1 & S2 | Other connector | > 10 (w/w) | Gas/Vapor |
| I | PF/Vapor In | 2 | TP | 16" | Other connector | > 10 (w/w) | Gas/Vapor |
| I | PF/Vapor In | 3 | 90 | | Other connector | > 10 (w/w) | Gas/Vapor |
| I | PF/Vapor In | 4 | Bushing | 2" x 1 1/2" | Other connector | > 10 (w/w) | Gas/Vapor |
| I | PF/Vapor In | 5 | TP | 18" | Other connector | > 10 (w/w) | Gas/Vapor |
| I | PF/Vapor In | 6 | UNION | | Other connector | > 10 (w/w) | Gas/Vapor |

US EPA ARCHIVE DOCUMENT

# Vacuum Pot Inspection

| | Vacuum Pot | | | Date monitored: 02 September 04 | Stoddard Solvent | PID background reading | |
|---|---|---|---|---|---|---|---|
| **Label** | **COMPONENT/Line** | **Sequence #** | **Pipe Type** | **Description/Note** | **Equip Type** | **Organics** | **HW State** |
| I | PF/Vapor In | 7 | TP | 30" | Other connector | > 10 (w/w) | Gas/Vapor |
| I | PF/Vapor In | 8 | 90 | | Other connector | > 10 (w/w) | Gas/Vapor |
| I | PF/Vapor In | 9 | Pipe | input to chiller | Other connector | > 10 (w/w) | Gas/Vapor |
| J | PF-S3/Out | 1 | 90 | | Other connector | > 10 (w/w) | Light Liquid |
| J | PF-S3/Out | 2 | TP | 45" | Other connector | > 10 (w/w) | Light Liquid |
| J | PF-S3/Out | 3 | Bushing | 1 1/2" x 2" | Other connector | > 10 (w/w) | Light Liquid |
| J | PF-S3/Out | 4 | UNION | | Other connector | > 10 (w/w) | Light Liquid |
| J | PF-S3/Out | 5 | TP | 24" | Other connector | > 10 (w/w) | Light Liquid |
| J | PF-S3/Out | 6 | 90 | | Other connector | > 10 (w/w) | Light Liquid |
| J | PF-S3/Out | 7 | TP | 5" | Other connector | > 10 (w/w) | Light Liquid |
| J | PF-S3/Out | 8 | 90 | | Other connector | > 10 (w/w) | Light Liquid |
| J | PF-S3/Out | 9 | NIP | 3" | Other connector | > 10 (w/w) | Light Liquid |
| J | PF-S3/Out | 10 | FL | Threaded | Flange | > 10 (w/w) | Light Liquid |
| J | PF-S3/Out | 11 | Pipe | Top of Separator | Other connector | > 10 (w/w) | Light Liquid |
| J | PF-S3/Out | 12 | Pipe | from chiller to 90 | Other connector | > 10 (w/w) | Light Liquid |
| AD | S3-VAC/Vacuum | 1 | Pipe | Top of Separator | Other connector | > 10 (w/w) | Gas/Vapor |
| AD | S3-VAC/Vacuum | 2 | FL | Threaded | Flange | > 10 (w/w) | Gas/Vapor |
| AD | S3-VAC/Vacuum | 3 | NIP | 3" | Other connector | > 10 (w/w) | Gas/Vapor |
| AD | S3-VAC/Vacuum | 4 | 90 | | Other connector | > 10 (w/w) | Gas/Vapor |
| AD | S3-VAC/Vacuum | 5 | TP | 5" | Other connector | > 10 (w/w) | Gas/Vapor |
| AD | S3-VAC/Vacuum | 6 | 90 | | Other connector | > 10 (w/w) | Gas/Vapor |
| AD | S3-VAC/Vacuum | 7 | TP | 12" | Other connector | > 10 (w/w) | Gas/Vapor |
| AD | S3-VAC/Vacuum | 8 | 90 | to east | Other connector | > 10 (w/w) | Gas/Vapor |
| AD | S3-VAC/Vacuum | 9 | TP | 16" | Other connector | > 10 (w/w) | Gas/Vapor |
| AD | S3-VAC/Vacuum | 10 | FL | Threaded | Flange | > 10 (w/w) | Gas/Vapor |
| AD | S3-VAC/Vacuum | 12 | TP | 5' | Other connector | > 10 (w/w) | Gas/Vapor |
| AD | S3-VAC/Vacuum | 13 | 45 | | Other connector | > 10 (w/w) | Gas/Vapor |
| AD | S3-VAC/Vacuum | 14 | NIP | 2" | Other connector | > 10 (w/w) | Gas/Vapor |
| AD | S3-VAC/Vacuum | 15 | 45 | | Other connector | > 10 (w/w) | Gas/Vapor |
| AD | S3-VAC/Vacuum | 16 | TP | 15' | Other connector | > 10 (w/w) | Gas/Vapor |
| AD | S3-VAC/Vacuum | 17 | 90 | east-north | Other connector | > 10 (w/w) | Gas/Vapor |
| AD | S3-VAC/Vacuum | 18 | TP | 15" | Other connector | > 10 (w/w) | Gas/Vapor |
| AD | S3-VAC/Vacuum | 19 | 90 | down | Other connector | > 10 (w/w) | Gas/Vapor |

US EPA ARCHIVE DOCUMENT

# Vacuum Pot Inspection

| | Vacuum Pot | | | Date monitored: 02 September 04 | Stoddard Solvent | PID background reading | |
|---|---|---|---|---|---|---|---|
| **Label** | **COMPONENT/Line** | **Sequence #** | **Pipe Type** | **Description/Note** | **Equip Type** | **Organics** | **HW State** |
| AD | S3-VAC/Vacuum | 20 | TP | 4' | Other connector | > 10 (w/w) | Gas/Vapor |
| AD | S3-VAC/Vacuum | 21 | UNION | | Other connector | > 10 (w/w) | Gas/Vapor |
| AD | S3-VAC/Vacuum | 22 | CV | Check Valve to PG | Valve in gas/vapor service | > 10 (w/w) | Gas/Vapor |
| AD | S3-VAC/Vacuum | 23 | Pipe | 3"L | Other connector | > 10 (w/w) | Gas/Vapor |
| AD | S3-VAC/Vacuum | 24 | FL | to vacuum pump | Flange | > 10 (w/w) | Gas/Vapor |
| AD | S3-VAC/Vacuum | 25 | PG | threaded | Other connector | > 10 (w/w) | Gas/Vapor |
| AE | S3/Vent | 1 | NIP | 4" | Other connector | > 10 (w/w) | Gas/Vapor |
| AE | S3/Vent | 2 | VALVE | # 10a | Valve in gas/vapor service | > 10 (w/w) | Gas/Vapor |
| AE | S3/Vent | 3 | Coupling | Top of S3 | Other connector | > 10 (w/w) | Gas/Vapor |
| AE | S3/Vent | 4 | Plug | Threaded | Other connector | > 10 (w/w) | Gas/Vapor |
| AF | S3/SG | 1 | VALVE | Top of Sight Glass | Valve in light liquid service | > 10 (w/w) | Light Liquid |
| AF | S3/SG | 2 | VALVE | Bottom of Sight Glass | Valve in light liquid service | > 10 (w/w) | Light Liquid |
| AF | S3/SG | 3 | SV | Sample Valve | Open-ended valve or line | > 10 (w/w) | Light Liquid |
| AF | S3/SG | 4 | Plug | to sampling valve | Other connector | > 10 (w/w) | Light Liquid |
| AF | S3/SG | 5 | Coupling | Top of SG | Other connector | > 10 (w/w) | Light Liquid |
| AF | S3/SG | 6 | Coupling | Bottom of SG | Other connector | > 10 (w/w) | Light Liquid |
| AF | S3/SG | 7 | SG | Sight Glass on lower South sid | Other connector | > 10 (w/w) | Light Liquid |
| AG | S3/Bottom | 1 | Pipe | Bottom S3 | Other connector | > 10 (w/w) | Light Liquid |
| AG | S3/Bottom | 2 | FL | Threaded | Flange | > 10 (w/w) | Light Liquid |
| AG | S3/Bottom | 3 | NIP | 3" | Other connector | > 10 (w/w) | Light Liquid |
| AG | S3/Bottom | 4 | VALVE | | Valve in light liquid service | > 10 (w/w) | Light Liquid |
| AG | S3/Bottom | 5 | NIP | 2" | Other connector | > 10 (w/w) | Light Liquid |
| AG | S3/Bottom | 6 | 90 | | Other connector | > 10 (w/w) | Light Liquid |
| AG | S3/Bottom | 7 | CAM | Male Thread to Male Camlock | Other connector | > 10 (w/w) | Light Liquid |
| AG | S3/Bottom | 8 | CAP | Camlock | Other connector | > 10 (w/w) | Light Liquid |
| K | S1 | 1 | Bushing | 1" x 1/4" for VPG | Other connector | > 10 (w/w) | Light Liquid |
| K | S1 | 2 | VPG | Vacuum Pressure Guage | Other connector | > 10 (w/w) | Light Liquid |
| K | S1 | 3 | FL | Top Blind Flange | Flange | > 10 (w/w) | Light Liquid |
| K | S1 | 4 | LT | High High Level Transmitter on SW | Other connector | > 10 (w/w) | Light Liquid |
| K | S1 | 5 | LT | High Level Transmitter on SW | Other connector | > 10 (w/w) | Light Liquid |
| K | S1 | 6 | CAP | Side Plug just below platform on East Side | Other connector | > 10 (w/w) | Light Liquid |
| K | S1 | 7 | CAP | Side Plug about 4' from bottom on SE | Other connector | > 10 (w/w) | Light Liquid |
| K | S1 | 8 | CAP | Side Plug about 1.5' from bottom on SE | Other connector | > 10 (w/w) | Light Liquid |

US EPA ARCHIVE DOCUMENT

# Vacuum Pot Inspection

| | Vacuum Pot | | | Date monitored: 02 September 04 | Stoddard Solvent | PID background reading | |
|---|---|---|---|---|---|---|---|
| **Label** | **COMPONENT/Line** | **Sequence #** | **Pipe Type** | **Description/Note** | **Equip Type** | **Organics** | **HW State** |
| K | S1 | 9 | CAP | Bottom Side Plug on East Side | Other connector | > 10 (w/w) | Light Liquid |
| K | S1 | 10 | TP | on NW side 3' from bottom for SQRF | Other connector | > 10 (w/w) | Light Liquid |
| K | S1 | 11 | VALVE | | Valve in light liquid service | > 10 (w/w) | Light Liquid |
| K | S1 | 12 | NIP | 1" | Other connector | > 10 (w/w) | Light Liquid |
| K | S1 | 13 | 90 | | Other connector | > 10 (w/w) | Light Liquid |
| K | S1 | 14 | NIP | 1" | Other connector | > 10 (w/w) | Light Liquid |
| K | S1 | 15 | SQRF | | Open-ended valve or line | > 10 (w/w) | Light Liquid |
| K | S1 | 16 | CAP | Bottom West Side Blind Flange | Other connector | > 10 (w/w) | Light Liquid |
| K | S1 | 17 | LT | Low Level Transmitter on SW | Other connector | > 10 (w/w) | Light Liquid |
| N | S1/SG | 1 | CAP | Plug @ Top of Sight Glass | Other connector | > 10 (w/w) | Light Liquid |
| N | S1/SG | 2 | NIP | 1" | Other connector | > 10 (w/w) | Light Liquid |
| N | S1/SG | 3 | VALVE | | Valve in light liquid service | > 10 (w/w) | Light Liquid |
| N | S1/SG | 4 | NIP | 1" | Other connector | > 10 (w/w) | Light Liquid |
| N | S1/SG | 5 | FL | | Flange | > 10 (w/w) | Light Liquid |
| N | S1/SG | 7 | TP | Top of Sight Glass | Other connector | > 10 (w/w) | Light Liquid |
| N | S1/SG | 8 | TP | Bottom of Sight Glass | Other connector | > 10 (w/w) | Light Liquid |
| N | S1/SG | 9 | VALVE | | Valve in light liquid service | > 10 (w/w) | Light Liquid |
| N | S1/SG | 10 | NIP | 1" | Other connector | > 10 (w/w) | Light Liquid |
| N | S1/SG | 11 | FL | Bottom of Sight Glass | Flange | > 10 (w/w) | Light Liquid |
| N | S1/SG | 12 | FL | Threaded onto S1 | Flange | > 10 (w/w) | Light Liquid |
| N | S1/SG | 13 | SV | Sample Valve @ Bottom of Sight Glass | Valve | > 10 (w/w) | Light Liquid |
| O | S1/Vent | 1 | FL | Out to Valve | Flange | > 10 (w/w) | Gas/Vapor |
| O | S1/Vent | 2 | VALVE | | Valve in gas/vapor service | > 10 (w/w) | Gas/Vapor |
| O | S1/Vent | 3 | FL | Outlet Vent | Flange | > 10 (w/w) | Gas/Vapor |
| O | S1/Vent | 4 | Pipe | Vent assembly that vents out to atmosphere | Other connector | | Gas/Vapor |
| Q | S2 | 1 | Bushing | 1" x 1/4" for VPG | Other connector | > 10 (w/w) | Light Liquid |
| Q | S2 | 2 | VPG | Vacuum Pressure Guage | Other connector | > 10 (w/w) | Light Liquid |
| Q | S2 | 3 | CAP | Top Blind Flange | Flange | > 10 (w/w) | Light Liquid |
| Q | S2 | 4 | LT | High High Level Transmitter on NW | Other connector | > 10 (w/w) | Light Liquid |
| Q | S2 | 5 | LT | High Level Transmitter on NW | Other connector | > 10 (w/w) | Light Liquid |
| Q | S2 | 6 | CAP | Side Plug just below platform on East Side | Other connector | > 10 (w/w) | Light Liquid |
| Q | S2 | 7 | CAP | Side Plug about 4' from bottom on SE | Other connector | > 10 (w/w) | Light Liquid |
| Q | S2 | 8 | CAP | Side Plug about 1.5' from bottom on SE | Other connector | > 10 (w/w) | Light Liquid |

US EPA ARCHIVE DOCUMENT

# Vacuum Pot Inspection

| | Vacuum Pot | | | Date monitored: 02 September 04 | Stoddard Solvent | PID background reading | |
|---|---|---|---|---|---|---|---|
| **Label** | **COMPONENT/Line** | **Sequence #** | **Pipe Type** | **Description/Note** | **Equip Type** | **Organics** | **HW State** |
| Q | S2 | 9 | CAP | Bottom Side Plug on East Side | Other connector | > 10 (w/w) | Light Liquid |
| Q | S2 | 10 | TP | on W side 3' from bottom for SQRF | Other connector | > 10 (w/w) | Light Liquid |
| Q | S2 | 11 | VALVE | | Valve in light liquid service | > 10 (w/w) | Light Liquid |
| Q | S2 | 12 | NIP | 2" | Other connector | > 10 (w/w) | Light Liquid |
| Q | S2 | 13 | 90 | | Other connector | > 10 (w/w) | Light Liquid |
| Q | S2 | 14 | NIP | 1" | Other connector | > 10 (w/w) | Light Liquid |
| Q | S2 | 15 | SQRF | | Other connector | > 10 (w/w) | Light Liquid |
| Q | S2 | 16 | CAP | Bottom West Side Blind Flange | Flange | > 10 (w/w) | Light Liquid |
| Q | S2 | 17 | LT | Low Level Transmitter on NW | Other connector | > 10 (w/w) | Light Liquid |
| AH | S2/SG | 1 | CAP | Plug @ Top of Sight Glass | Other connector | > 10 (w/w) | Light Liquid |
| AH | S2/SG | 2 | NIP | 1" | Other connector | > 10 (w/w) | Light Liquid |
| AH | S2/SG | 3 | VALVE | | Valve in light liquid service | > 10 (w/w) | Light Liquid |
| AH | S2/SG | 4 | NIP | 1" | Other connector | > 10 (w/w) | Light Liquid |
| AH | S2/SG | 5 | FL | | Flange | > 10 (w/w) | Light Liquid |
| AH | S2/SG | 6 | FL | | Flange | > 10 (w/w) | Light Liquid |
| AH | S2/SG | 7 | TP | Top of Sight Glass | Other connector | > 10 (w/w) | Light Liquid |
| AH | S2/SG | 8 | TP | Bottom of Sight Glass | Other connector | > 10 (w/w) | Light Liquid |
| AH | S2/SG | 9 | VALVE | | Valve in light liquid service | > 10 (w/w) | Light Liquid |
| AH | S2/SG | 10 | NIP | 1" | Other connector | > 10 (w/w) | Light Liquid |
| AH | S2/SG | 11 | FL | Bottom of Sight Glass | Flange | > 10 (w/w) | Light Liquid |
| AH | S2/SG | 12 | FL | Threaded onto S2 | Flange | > 10 (w/w) | Light Liquid |
| AH | S2/SG | 13 | SV | Sample Valve @ Bottom of Sight Glass | Valve | > 10 (w/w) | Light Liquid |
| AI | S2/Vent | 1 | FL | Out to Valve # 6b | Flange | > 10 (w/w) | Gas/Vapor |
| AI | S2/Vent | 2 | VALVE | # 6b | Valve in gas/vapor service | > 10 (w/w) | Gas/Vapor |
| AI | S2/Vent | 3 | FL | Outlet Vent | Flange | > 10 (w/w) | Gas/Vapor |
| AI | S2/Vent | 4 | Pipe | Vent assembly that vents out to atmosphere | Other connector | > 10 (w/w) | Gas/Vapor |
| L | S1/Bottom | 1 | Pipe | Bottom S1 | Other connector | > 10 (w/w) | Light Liquid |
| L | S1/Bottom | 2 | FL | Threaded | Flange | > 10 (w/w) | Light Liquid |
| L | S1/Bottom | 3 | NIP | 2" | Other connector | > 10 (w/w) | Light Liquid |
| L | S1/Bottom | 4 | VALVE | | Valve in light liquid service | > 10 (w/w) | Light Liquid |
| L | S1/Bottom | 5 | Bushing | 2" x 1" | Other connector | > 10 (w/w) | Light Liquid |
| L | S1/Bottom | 6 | NIP | 4" | Other connector | > 10 (w/w) | Light Liquid |
| L | S1/Bottom | 7 | 90 | west | Other connector | > 10 (w/w) | Light Liquid |

US EPA ARCHIVE DOCUMENT

# Vacuum Pot Inspection

| | Vacuum Pot | | | Date monitored: 02 September 04 | Stoddard Solvent | PID background reading | |
|---|---|---|---|---|---|---|---|
| **Label** | **COMPONENT/Line** | **Sequence #** | **Pipe Type** | **Description/Note** | **Equip Type** | **Organics** | **HW State** |
| L | S1/Bottom | 8 | TP | 3' | Other connector | > 10 (w/w) | Light Liquid |
| L | S1/Bottom | 9 | 90 | south | Other connector | > 10 (w/w) | Light Liquid |
| L | S1/Bottom | 10 | NIP | 3' | Other connector | > 10 (w/w) | Light Liquid |
| L | S1/Bottom | 11 | 45 | up 45 | Other connector | > 10 (w/w) | Light Liquid |
| L | S1/Bottom | 12 | NIP | 1" | Other connector | > 10 (w/w) | Light Liquid |
| L | S1/Bottom | 13 | 45 | south | Other connector | > 10 (w/w) | Light Liquid |
| L | S1/Bottom | 14 | TP | 2' | Other connector | > 10 (w/w) | Light Liquid |
| L | S1/Bottom | 15 | UNION | | Other connector | > 10 (w/w) | Light Liquid |
| L | S1/Bottom | 16 | NIP | 3" | Other connector | > 10 (w/w) | Light Liquid |
| L | S1/Bottom | 17 | 90 | east | Other connector | > 10 (w/w) | Light Liquid |
| L | S1/Bottom | 18 | TP | 18" | Other connector | > 10 (w/w) | Light Liquid |
| L | S1/Bottom | 19 | Tee | | Other connector | > 10 (w/w) | Light Liquid |
| L | S1/Bottom | 20 | NIP | 5" north from side of tee (# 19) | Other connector | > 10 (w/w) | Light Liquid |
| L | S1/Bottom | 21 | UNION | | Other connector | > 10 (w/w) | Light Liquid |
| L | S1/Bottom | 22 | NIP | 3" | Other connector | > 10 (w/w) | Light Liquid |
| L | S1/Bottom | 23 | VALVE | | Valve in light liquid service | > 10 (w/w) | Light Liquid |
| L | S1/Bottom | 24 | NIP | 1" | Other connector | > 10 (w/w) | Light Liquid |
| L | S1/Bottom | 25 | Tee | | Other connector | > 10 (w/w) | Light Liquid |
| L | S1/Bottom | 26 | Bushing | 1" x 1/2" west from tee (# 25) | Other connector | > 10 (w/w) | Light Liquid |
| L | S1/Bottom | 27 | NIP | 1" | Other connector | > 10 (w/w) | Light Liquid |
| L | S1/Bottom | 28 | VALVE | | Open-ended valve or line | > 10 (w/w) | Light Liquid |
| L | S1/Bottom | 29 | Bushing | Bushing 1/2" x 3/8" | Other connector | > 10 (w/w) | Light Liquid |
| L | S1/Bottom | 30 | AF | | Other connector | > 10 (w/w) | Light Liquid |
| L | S1/Bottom | 31 | NIP | 1" north from tee (# 25) | Other connector | > 10 (w/w) | Light Liquid |
| L | S1/Bottom | 32 | Reducer | 1" x 3/4" | Other connector | > 10 (w/w) | Light Liquid |
| L | S1/Bottom | 33 | NIP | 1" | Other connector | > 10 (w/w) | Light Liquid |
| L | S1/Bottom | 34 | FL | Threaded | Flange | > 10 (w/w) | Light Liquid |
| L | S1/Bottom | 35 | PUMP | Flanged Pump | Pump in light liquid service | > 10 (w/w) | Light Liquid |
| R | S2/Bottom | 1 | Pipe | Bottom Outlet | Other connector | > 10 (w/w) | Light Liquid |
| R | S2/Bottom | 2 | FL | Threaded | Flange | > 10 (w/w) | Light Liquid |
| R | S2/Bottom | 3 | NIP | 2" | Other connector | > 10 (w/w) | Light Liquid |
| R | S2/Bottom | 4 | VALVE | | Valve in light liquid service | > 10 (w/w) | Light Liquid |
| R | S2/Bottom | 5 | Bushing | 2" x 1" | Other connector | > 10 (w/w) | Light Liquid |

US EPA ARCHIVE DOCUMENT

# Vacuum Pot Inspection

| | Vacuum Pot | | | Date monitored: 02 September 04 | Stoddard Solvent | PID background reading | |
|---|---|---|---|---|---|---|---|
| **Label** | **COMPONENT/Line** | **Sequence #** | **Pipe Type** | **Description/Note** | **Equip Type** | **Organics** | **HW State** |
| R | S2/Bottom | 6 | NIP | 1" | Other connector | > 10 (w/w) | Light Liquid |
| R | S2/Bottom | 7 | 90 | south | Other connector | > 10 (w/w) | Light Liquid |
| R | S2/Bottom | 8 | NIP | 2" | Other connector | > 10 (w/w) | Light Liquid |
| R | S2/Bottom | 9 | UNION | | Other connector | > 10 (w/w) | Light Liquid |
| R | S2/Bottom | 10 | NIP | 4" | Other connector | > 10 (w/w) | Light Liquid |
| R | S2/Bottom | 11 | Tee | | Other connector | > 10 (w/w) | Light Liquid |
| R | S2/Bottom | 12 | TP | 16" west from Tee (# 11) into Tee (# 19 S1/Botto | Other connector | > 10 (w/w) | Light Liquid |
| R | S2/Bottom | 13 | NIP | 3" east from Tee (# 11) | Other connector | > 10 (w/w) | Light Liquid |
| R | S2/Bottom | 14 | VALVE | | Valve in light liquid service | > 10 (w/w) | Light Liquid |
| R | S2/Bottom | 15 | TP | TP 6" | Other connector | > 10 (w/w) | Light Liquid |
| R | S2/Bottom | 16 | CAM | Camlock with Cap | Other connector | > 10 (w/w) | Light Liquid |
| AJ | Product Line | 1 | FL | Threaded | Flange | > 10 (w/w) | Light Liquid |
| AJ | Product Line | 2 | NIP | 1" | Other connector | > 10 (w/w) | Light Liquid |
| AJ | Product Line | 3 | Reducer | 3/4" x 1" | Other connector | > 10 (w/w) | Light Liquid |
| AJ | Product Line | 4 | NIP | 1" | Other connector | > 10 (w/w) | Light Liquid |
| AJ | Product Line | 5 | Tee | North to connections to side of West Trough, Top of Tank 121, and in front of Product Tank Farm Trough and West to West Trough | Other connector | > 10 (w/w) | Light Liquid |
| | | | | | | | |
| | | | | | | | |
| | | | | | | | |
| | | | | | | | |
| | ** Temp of 108 affected the FID. | | | | | | |

US EPA ARCHIVE DOCUMENT

# Vacuum Pot Inspection

| : 9.3-16.4 ppm** | | | | | |
|---|---|---|---|---|---|
| Compliance Method | PID Reading | Leak? Y/N | Work Order # | Retest Date | Leak Fixed? |
| Monitor if evidence of leak | | | | | |
| Monitor if evidence of leak | | | | | |
| Monitor if evidence of leak | | | | | |
| Monitor if evidence of leak | | | | | |
| Monitor if evidence of leak | | | | | |
| Monitor if evidence of leak | | | | | |
| Monitor if evidence of leak | | | | | |
| Monitor if evidence of leak | | | | | |
| Monitor if evidence of leak | | | | | |
| Monitor if evidence of leak | | | | | |
| Monitor if evidence of leak | | | | | |
| Monitor if evidence of leak | | | | | |
| Monitor if evidence of leak | | | | | |
| Monitor if evidence of leak | | | | | |
| Monitor if evidence of leak | | | | | |
| Monitor if evidence of leak | | | | | |
| Monitor if evidence of leak | | | | | |
| Monitor if evidence of leak | | | | | |
| Monitor if evidence of leak | | | | | |
| Monthly LDAR | | | | | |
| Monitor if evidence of leak | | | | | |
| Monitor if evidence of leak | | | | | |
| Monitor if evidence of leak | | | | | |
| No detectable emissions | | | | | |
| Monitor if evidence of leak | | | | | |
| Monitor if evidence of leak | | | | | |
| Monitor if evidence of leak | | | | | |
| Monitor if evidence of leak | | | | | |
| Monitor if evidence of leak | | | | | |
| Monitor if evidence of leak | | | | | |
| Monitor if evidence of leak | | | | | |
| Monitor if evidence of leak | | | | | |
| Monitor if evidence of leak | | | | | |
| Monitor if evidence of leak | | | | | |

US EPA ARCHIVE DOCUMENT

# Vacuum Pot Inspection

| : 9.3-16.4 ppm** | | | | | |
|---|---|---|---|---|---|
| Compliance Method | PID Reading | Leak? Y/N | Work Order # | Retest Date | Leak Fixed? |
| Monitor if evidence of leak | | | | | |
| Monitor if evidence of leak | | | | | |
| Monitor if evidence of leak | | | | | |
| Monitor if evidence of leak | | | | | |
| Monitor if evidence of leak | | | | | |
| Monitor if evidence of leak | | | | | |
| Monitor if evidence of leak | | | | | |
| Monthly LDAR | | | | | |
| Monitor if evidence of leak | | | | | |
| Monitor if evidence of leak | | | | | |
| Monitor if evidence of leak | | | | | |
| Monitor if evidence of leak | | | | | |
| Monitor if evidence of leak | | | | | |
| Monitor if evidence of leak | | | | | |
| Monitor if evidence of leak | | | | | |
| Monitor if evidence of leak | | | | | |
| Monitor if evidence of leak | | | | | |
| Monitor if evidence of leak | | | | | |
| Monitor if evidence of leak | | | | | |
| Monitor if evidence of leak | | | | | |
| Monitor if evidence of leak | | | | | |
| Monitor if evidence of leak | | | | | |
| Monitor if evidence of leak | | | | | |
| Monitor if evidence of leak | | | | | |
| Monitor if evidence of leak | | | | | |
| Monitor if evidence of leak | | | | | |
| Monitor if evidence of leak | | | | | |
| Monitor if evidence of leak | | | | | |
| Monthly LDAR | | | | | |
| Monthly LDAR | | | | | |
| Monitor if evidence of leak | | | | | |
| Monitor if evidence of leak | | | | | |
| Monitor if evidence of leak | | | | | |
| Monitor if evidence of leak | | | | | |

US EPA ARCHIVE DOCUMENT

# Vacuum Pot Inspection

| : 9.3-16.4 ppm** | | | | | |
|---|---|---|---|---|---|
| Compliance Method | PID Reading | Leak? Y/N | Work Order # | Retest Date | Leak Fixed? |
| Monitor if evidence of leak | | | | | |
| Monthly LDAR | | | | | |
| Monitor if evidence of leak | | | | | |
| Monitor if evidence of leak | | | | | |
| Monitor if evidence of leak | | | | | |
| Monitor if evidence of leak | | | | | |
| Monitor if evidence of leak | | | | | |
| Monitor if evidence of leak | | | | | |
| Monitor if evidence of leak | | | | | |
| Monitor if evidence of leak | | | | | |
| Monthly LDAR | | | | | |
| Monitor if evidence of leak | | | | | |
| Monitor if evidence of leak | | | | | |
| Monitor if evidence of leak | | | | | |
| Monthly LDAR | | | | | |
| Monitor if evidence of leak | | | | | |
| Monitor if evidence of leak | | | | | |
| Monitor if evidence of leak | | | | | |
| Monitor if evidence of leak | | | | | |
| Monitor if evidence of leak | | | | | |
| Monitor if evidence of leak | | | | | |
| Monitor if evidence of leak | | | | | |
| Monitor if evidence of leak | | | | | |
| Monitor if evidence of leak | | | | | |
| Monitor if evidence of leak | | | | | |
| Monitor if evidence of leak | | | | | |
| Monitor if evidence of leak | | | | | |
| Monthly LDAR | | | | | |
| Monitor if evidence of leak | | | | | |
| Monitor if evidence of leak | | | | | |

US EPA ARCHIVE DOCUMENT

# Vacuum Pot Inspection

| : 9.3-16.4 ppm** | | | | | |
|---|---|---|---|---|---|
| Compliance Method | PID Reading | Leak? Y/N | Work Order # | Retest Date | Leak Fixed? |
| Monitor if evidence of leak | | | | | |
| Monitor if evidence of leak | | | | | |
| Monitor if evidence of leak | | | | | |
| Monitor if evidence of leak | | | | | |
| Monitor if evidence of leak | | | | | |
| Monitor if evidence of leak | | | | | |
| Monitor if evidence of leak | | | | | |
| Monitor if evidence of leak | | | | | |
| Monitor if evidence of leak | | | | | |
| Monitor if evidence of leak | | | | | |
| Monthly LDAR | | | | | |
| Monitor if evidence of leak | | | | | |
| Monitor if evidence of leak | | | | | |
| Monitor if evidence of leak | | | | | |
| Monitor if evidence of leak | | | | | |
| Monitor if evidence of leak | | | | | |
| Monitor if evidence of leak | | | | | |
| Monitor if evidence of leak | | | | | |
| Monitor if evidence of leak | | | | | |
| Monthly LDAR | | | | | |
| Monitor if evidence of leak | | | | | |
| Second valve or cap | | | | | |
| Monitor if evidence of leak | | | | | |
| Monitor if evidence of leak | | | | | |
| Monitor if evidence of leak | | | | | |
| Monitor if evidence of leak | | | | | |
| Monthly LDAR | | | | | |
| Monitor if evidence of leak | | | | | |
| Monitor if evidence of leak | | | | | |
| Monitor if evidence of leak | | | | | |
| Monitor if evidence of leak | | | | | |
| Monthly LDAR | | | | | |
| Monitor if evidence of leak | | | | | |

US EPA ARCHIVE DOCUMENT

# Vacuum Pot Inspection

| : 9.3-16.4 ppm** | | | | | |
|---|---|---|---|---|---|
| Compliance Method | PID Reading | Leak? Y/N | Work Order # | Retest Date | Leak Fixed? |
| Monitor if evidence of leak | | | | | |
| Monitor if evidence of leak | | | | | |
| Monitor if evidence of leak | | | | | |
| Monitor if evidence of leak | | | | | |
| Monitor if evidence of leak | | | | | |
| Monitor if evidence of leak | | | | | |
| Monitor if evidence of leak | | | | | |
| Monitor if evidence of leak | | | | | |
| Monitor if evidence of leak | | | | | |
| Monitor if evidence of leak | | | | | |
| Monitor if evidence of leak | | | | | |
| Monitor if evidence of leak | | | | | |
| Monitor if evidence of leak | | | | | |
| Monthly LDAR | | | | | |
| Monitor if evidence of leak | | | | | |
| Monitor if evidence of leak | | | | | |
| Monitor if evidence of leak | | | | | |
| Monitor if evidence of leak | | | | | |
| Monitor if evidence of leak | | | | | |
| Monitor if evidence of leak | | | | | |
| Monitor if evidence of leak | | | | | |
| Monitor if evidence of leak | | | | | |
| Monitor if evidence of leak | | | | | |
| Monitor if evidence of leak | | | | | |
| Monitor if evidence of leak | | | | | |
| Monitor if evidence of leak | | | | | |
| Monitor if evidence of leak | | | | | |
| Monitor if evidence of leak | | | | | |
| Monthly LDAR | | | | | |
| Monitor if evidence of leak | | | | | |
| Monitor if evidence of leak | | | | | |
| Monitor if evidence of leak | | | | | |
| Monitor if evidence of leak | | | | | |
| Monitor if evidence of leak | | | | | |

US EPA ARCHIVE DOCUMENT

# Vacuum Pot Inspection

| : 9.3-16.4 ppm** | | | | | |
|---|---|---|---|---|---|
| Compliance Method | PID Reading | Leak? Y/N | Work Order # | Retest Date | Leak Fixed? |
| Monitor if evidence of leak | | | | | |
| Monitor if evidence of leak | | | | | |
| Monitor if evidence of leak | | | | | |
| Monitor if evidence of leak | | | | | |
| Monitor if evidence of leak | | | | | |
| Monitor if evidence of leak | | | | | |
| Monitor if evidence of leak | | | | | |
| Monitor if evidence of leak | | | | | |
| Monitor if evidence of leak | | | | | |
| Monitor if evidence of leak | | | | | |
| Monitor if evidence of leak | | | | | |
| Monitor if evidence of leak | | | | | |
| Monitor if evidence of leak | | | | | |
| Monitor if evidence of leak | | | | | |
| Monthly LDAR | | | | | |
| Monitor if evidence of leak | | | | | |
| Monitor if evidence of leak | | | | | |
| Monitor if evidence of leak | | | | | |
| Second valve or cap | | | | | |
| Monitor if evidence of leak | | | | | |
| Monitor if evidence of leak | | | | | |
| Monitor if evidence of leak | | | | | |
| Monitor if evidence of leak | | | | | |
| Monitor if evidence of leak | | | | | |
| Monthly LDAR | | | | | |
| Monitor if evidence of leak | | | | | |
| Monitor if evidence of leak | | | | | |
| Monitor if evidence of leak | | | | | |
| Monitor if evidence of leak | | | | | |
| Monitor if evidence of leak | | | | | |
| Monitor if evidence of leak | | | | | |
| Monitor if evidence of leak | | | | | |
| Monitor if evidence of leak | | | | | |

US EPA ARCHIVE DOCUMENT

# Vacuum Pot Inspection

| : 9.3-16.4 ppm** | | | | | |
|---|---|---|---|---|---|
| Compliance Method | PID Reading | Leak? Y/N | Work Order # | Retest Date | Leak Fixed? |
| Monitor if evidence of leak | | | | | |
| Monitor if evidence of leak | | | | | |
| Monitor if evidence of leak | | | | | |
| Monitor if evidence of leak | | | | | |
| Monitor if evidence of leak | | | | | |
| Monitor if evidence of leak | | | | | |
| Monitor if evidence of leak | | | | | |
| Monitor if evidence of leak | | | | | |
| Monitor if evidence of leak | | | | | |
| Monitor if evidence of leak | | | | | |
| Monitor if evidence of leak | | | | | |
| Monitor if evidence of leak | | | | | |
| Monthly LDAR | | | | | |
| Monitor if evidence of leak | | | | | |
| Monitor if evidence of leak | | | | | |
| Monthly LDAR | | | | | |
| Monitor if evidence of leak | | | | | |
| Monitor if evidence of leak | | | | | |
| Monthly LDAR | | | | | |
| Monitor if evidence of leak | | | | | |
| Monitor if evidence of leak | | | | | |
| Monitor if evidence of leak | | | | | |
| Monitor if evidence of leak | | | | | |
| Monitor if evidence of leak | | | | | |
| Monthly LDAR | | | | | |
| Monitor if evidence of leak | | | | | |
| Monitor if evidence of leak | | | | | |
| Monitor if evidence of leak | | | | | |
| Monitor if evidence of leak | | | | | |
| Monitor if evidence of leak | | | | | |
| Monitor if evidence of leak | | | | | |
| Monitor if evidence of leak | | | | | |
| Monitor if evidence of leak | | | | | |

US EPA ARCHIVE DOCUMENT

# Vacuum Pot Inspection

| : 9.3-16.4 ppm** | | | | | |
|---|---|---|---|---|---|
| Compliance Method | PID Reading | Leak? Y/N | Work Order # | Retest Date | Leak Fixed? |
| Monitor if evidence of leak | | | | | |
| Monitor if evidence of leak | | | | | |
| Monitor if evidence of leak | | | | | |
| Monitor if evidence of leak | | | | | |
| Monitor if evidence of leak | | | | | |
| Monitor if evidence of leak | | | | | |
| Monitor if evidence of leak | | | | | |
| Monitor if evidence of leak | | | | | |
| Monitor if evidence of leak | | | | | |
| Monitor if evidence of leak | | | | | |
| Monitor if evidence of leak | | | | | |
| Monitor if evidence of leak | | | | | |
| Monitor if evidence of leak | | | | | |
| Monitor if evidence of leak | | | | | |
| Monitor if evidence of leak | | | | | |
| Monitor if evidence of leak | | | | | |
| Monitor if evidence of leak | | | | | |
| Monitor if evidence of leak | | | | | |
| Monitor if evidence of leak | | | | | |
| Monitor if evidence of leak | | | | | |
| Monitor if evidence of leak | | | | | |
| Monitor if evidence of leak | | | | | |
| Monitor if evidence of leak | | | | | |
| Monitor if evidence of leak | | | | | |
| Monitor if evidence of leak | | | | | |
| Monitor if evidence of leak | | | | | |
| Monitor if evidence of leak | | | | | |
| Monitor if evidence of leak | | | | | |
| Monitor if evidence of leak | | | | | |
| Monitor if evidence of leak | | | | | |
| Monitor if evidence of leak | | | | | |
| Monitor if evidence of leak | | | | | |

US EPA ARCHIVE DOCUMENT

# Vacuum Pot Inspection

| : 9.3-16.4 ppm** | | | | | |
|---|---|---|---|---|---|
| Compliance Method | PID Reading | Leak? Y/N | Work Order # | Retest Date | Leak Fixed? |
| Monitor if evidence of leak | | | | | |
| Monitor if evidence of leak | | | | | |
| Monthly LDAR | | | | | |
| Monitor if evidence of leak | | | | | |
| Monitor if evidence of leak | | | | | |
| Monitor if evidence of leak | | | | | |
| Monitor if evidence of leak | | | | | |
| Monthly LDAR | | | | | |
| Monitor if evidence of leak | | | | | |
| Monitor if evidence of leak | | | | | |
| Monitor if evidence of leak | | | | | |
| Monitor if evidence of leak | | | | | |
| Second valve or cap | | | | | |
| Monitor if evidence of leak | | | | | |
| Monitor if evidence of leak | | | | | |
| Monitor if evidence of leak | | | | | |
| Monitor if evidence of leak | | | | | |
| Monitor if evidence of leak | | | | | |
| Monitor if evidence of leak | | | | | |
| Monitor if evidence of leak | | | | | |
| Monthly LDAR | | | | | |
| Monitor if evidence of leak | | | | | |
| Monitor if evidence of leak | | | | | |
| Monitor if evidence of leak | | | | | |
| Monitor if evidence of leak | | | | | |
| Monitor if evidence of leak | | | | | |
| Monitor if evidence of leak | | | | | |
| Monitor if evidence of leak | | | | | |
| Monitor if evidence of leak | | | | | |
| Monitor if evidence of leak | | | | | |
| Monitor if evidence of leak | | | | | |
| Monitor if evidence of leak | | | | | |
| Monitor if evidence of leak | | | | | |

US EPA ARCHIVE DOCUMENT

# Vacuum Pot Inspection

| : 9.3-16.4 ppm** | | | | | |
|---|---|---|---|---|---|
| Compliance Method | PID Reading | Leak? Y/N | Work Order # | Retest Date | Leak Fixed? |
| Monitor if evidence of leak | | | | | |
| Monitor if evidence of leak | | | | | |
| Monthly LDAR | | | | | |
| Monitor if evidence of leak | | | | | |
| Monitor if evidence of leak | | | | | |
| Monitor if evidence of leak | | | | | |
| Second valve or cap | | | | | |
| Monitor if evidence of leak | | | | | |
| Monitor if evidence of leak | | | | | |
| Monitor if evidence of leak | | | | | |
| Monitor if evidence of leak | | | | | |
| Monthly LDAR | | | | | |
| Monitor if evidence of leak | | | | | |
| Monitor if evidence of leak | | | | | |
| Monitor if evidence of leak | | | | | |
| Monitor if evidence of leak | | | | | |
| Monthly LDAR | | | | | |
| Monitor if evidence of leak | | | | | |
| Monitor if evidence of leak | | | | | |
| Monitor if evidence of leak | | | | | |
| Monitor if evidence of leak | | | | | |
| Monitor if evidence of leak | | | | | |
| Monthly LDAR | | | | | |
| Monitor if evidence of leak | | | | | |
| Monitor if evidence of leak | | | | | |
| Monitor if evidence of leak | | | | | |
| Monitor if evidence of leak | | | | | |
| Monitor if evidence of leak | | | | | |
| Monitor if evidence of leak | | | | | |
| Monitor if evidence of leak | | | | | |
| Monitor if evidence of leak | | | | | |
| Monitor if evidence of leak | | | | | |
| Monitor if evidence of leak | | | | | |

US EPA ARCHIVE DOCUMENT

# Vacuum Pot Inspection

| : 9.3-16.4 ppm** | | | | | |
|---|---|---|---|---|---|
| Compliance Method | PID Reading | Leak? Y/N | Work Order # | Retest Date | Leak Fixed? |
| Monitor if evidence of leak | | | | | |
| Monitor if evidence of leak | | | | | |
| Monthly LDAR | | | | | |
| Monitor if evidence of leak | | | | | |
| Monitor if evidence of leak | | | | | |
| Monitor if evidence of leak | | | | | |
| Monitor if evidence of leak | | | | | |
| Monitor if evidence of leak | | | | | |
| Monitor if evidence of leak | | | | | |
| Monitor if evidence of leak | | | | | |
| Monitor if evidence of leak | | | | | |
| Monthly LDAR | | | | | |
| Monitor if evidence of leak | | | | | |
| Monitor if evidence of leak | | | | | |
| Monitor if evidence of leak | | | | | |
| Monitor if evidence of leak | | | | | |
| Monitor if evidence of leak | | | | | |
| Monthly LDAR | | | | | |
| Monitor if evidence of leak | | | | | |
| Monitor if evidence of leak | | | | | |
| Monitor if evidence of leak | | | | | |
| Monitor if evidence of leak | | | | | |
| Monitor if evidence of leak | | | | | |
| Monthly LDAR | | | | | |
| Monitor if evidence of leak | | | | | |
| Monitor if evidence of leak | | | | | |
| Monitor if evidence of leak | | | | | |
| Monitor if evidence of leak | | | | | |
| Monitor if evidence of leak | | | | | |
| Monthly LDAR | | | | | |
| Monitor if evidence of leak | | | | | |
| Monitor if evidence of leak | | | | | |
| Monitor if evidence of leak | | | | | |

US EPA ARCHIVE DOCUMENT

# Vacuum Pot Inspection

| : 9.3-16.4 ppm** | | | | | |
|---|---|---|---|---|---|
| Compliance Method | PID Reading | Leak? Y/N | Work Order # | Retest Date | Leak Fixed? |
| Monitor if evidence of leak | | | | | |
| Monitor if evidence of leak | | | | | |
| Monitor if evidence of leak | | | | |

US EPA ARCHIVE DOCUMENT

# Vacuum Pot Inspection

| : 9.3-16.4 ppm** | | | | | |
|---|---|---|---|---|---|
| Compliance Method | PID Reading | Leak? Y/N | Work Order # | Retest Date | Leak Fixed? |
| Monitor if evidence of leak | | | | | |
| Monitor if evidence of leak | | | | | |
| Monitor if evidence of leak | | | | | |
| Monitor if evidence of leak | | | | | |
| Monitor if evidence of leak | | | | | |
| Monitor if evidence of leak | | | | | |
| Monitor if evidence of leak | | | | | |
| Monitor if evidence of leak | | | | | |
| Monthly LDAR | | | | | |
| Monitor if evidence of leak | | | | | |
| Monitor if evidence of leak | | | | | |
| Monitor if evidence of leak | | | | | |
| Monitor if evidence of leak | | | | | |
| Monitor if evidence of leak | | | | | |
| Monitor if evidence of leak | | | | | |
| Monitor if evidence of leak | | | | | |
| | | | | | |
| | | | | | |
| green = no leaks | | | | | |
| red = leak detected | | | | | |
| | | | | | |

US EPA ARCHIVE DOCUMENT

# Transfer Lines

| | Xfer lines | SS Round | | Date monitored: 02 Sep 04 | | PID background reading | |
|---|---|---|---|---|---|---|---|
| **Label** | **COMPONENT/Line** | **Sequence #** | **Pipe Type** | **Description/Note** | **Equip Type** | **Organics** | **HW State** |
| A | T101 | 1 | FL | Bottom of T101 | Flange | > 10 (w/w) | Light Liquid |
| A | T101 | 2 | FL | On valve #A3 | Flange | > 10 (w/w) | Light Liquid |
| A | T101 | 3 | Valve | Bottom of T101 | Valve in light liquid service | > 10 (w/w) | Light Liquid |
| A | T101 | 4 | FL | Bottom of valve #A3 | Flange | > 10 (w/w) | Light Liquid |
| A | T101 | 5 | Multi | 4", 3" and 2" piping from bottom of T101 to East Trough | Other connector | > 10 (w/w) | Light Liquid |
| A | T101 | 6 | FL | End flange east side | Flange | > 10 (w/w) | Light Liquid |
| A | T101 | 7 | FL | North of valve #A8 | Flange | > 10 (w/w) | Light Liquid |
| A | T101 | 8 | Valve | To East Trough | Valve in light liquid service | > 10 (w/w) | Light Liquid |
| A | T101 | 9 | FL | South of valve #A8 | Flange | > 10 (w/w) | Light Liquid |
| A | T101 | 10 | FL | East Trough | Flange | > 10 (w/w) | Light Liquid |
| A | T101 | 11 | Camlock | East Trough | Open-ended valve or line | > 10 (w/w) | Light Liquid |
| B | T102 | 1 | FL | Bottom of T102 | Flange | > 10 (w/w) | Light Liquid |
| B | T102 | 2 | FL | On valve #B3 | Flange | > 10 (w/w) | Light Liquid |
| B | T102 | 3 | Valve | Bottom of T102 | Valve in light liquid service | > 10 (w/w) | Light Liquid |
| B | T102 | 4 | FL | Bottom of valve #B3 | Flange | > 10 (w/w) | Light Liquid |
| B | T102 | 5 | Multi | 4" and 3" piping from bottom of T102 to East Trough | Other connector | > 10 (w/w) | Light Liquid |
| B | T102 | 6 | FL | End flange east side | Flange | > 10 (w/w) | Light Liquid |
| B | T102 | 7 | FL | Noth of valve #B8 | Flange | > 10 (w/w) | Light Liquid |
| B | T102 | 8 | Valve | | Valve in light liquid service | > 10 (w/w) | Light Liquid |
| B | T102 | 9 | FL | on valve #B8 | Flange | > 10 (w/w) | Light Liquid |
| B | T102 | 10 | FL | to East Trough, south of valve #B8 | Flange | > 10 (w/w) | Light Liquid |
| B | T102 | 11 | FL | East Trough | Flange | > 10 (w/w) | Light Liquid |
| B | T102 | 12 | Camlock | East Trough | Open-ended valve or line | > 10 (w/w) | Light Liquid |
| C | T103 | 1 | FL | Bottom of T103 | Flange | > 10 (w/w) | Light Liquid |
| C | T103 | 2 | Valve | Bottom of T103 | Valve in light liquid service | > 10 (w/w) | Light Liquid |
| C | T103 | 3 | FL | Bottom of T103 | Flange | > 10 (w/w) | Light Liquid |
| C | T103 | 4 | Multi | Reducer, tee, pipe | Other connector | > 10 (w/w) | Light Liquid |
| C | T103 | 5 | FL | west of tee | Flange | > 10 (w/w) | Light Liquid |
| C | T103 | 6 | Multi | Piping from FL #C5 to East Trough (pipe, elbow, etc.) | Other connector | > 10 (w/w) | Light Liquid |
| C | T103 | 7 | FL | to East Trough | Flange | > 10 (w/w) | Light Liquid |
| C | T103 | 8 | FL | East Trough | Flange | > 10 (w/w) | Light Liquid |
| C | T103 | 9 | Valve | East Trough | Valve in light liquid service | > 10 (w/w) | Light Liquid |
| C | T103 | 10 | FL | East Trough | Flange | > 10 (w/w) | Light Liquid |
| C | T103 | 11 | Camlock | East Trough | Open-ended valve or line | > 10 (w/w) | Light Liquid |
| C | T103 | 12 | FL | west of valve #C13 | Flange | > 10 (w/w) | Light Liquid |
| C | T103 | 13 | Valve | | Valve in light liquid service | > 10 (w/w) | Light Liquid |
| C | T103 | 14 | FL | east of valve #C13 | Flange | > 10 (w/w) | Light Liquid |

US EPA ARCHIVE DOCUMENT

# Transfer Lines

| | Xfer lines | SS Round | | Date monitored: 02 Sep 04 | | PID background reading | |
|---|---|---|---|---|---|---|---|
| **Label** | **COMPONENT/Line** | **Sequence #** | **Pipe Type** | **Description/Note** | **Equip Type** | **Organics** | **HW State** |
| C | T103 | 15 | Multi | reducer, pipe, elbow | Other connector | > 10 (w/w) | Light Liquid |
| C | T103 | 16 | FL | east side T103 | Flange | > 10 (w/w) | Light Liquid |
| C | T103 | 17 | Multi | east side bottom of cone on T103 | Other connector | > 10 (w/w) | Light Liquid |
| C | T103 | 18 | Valve | | Valve in light liquid service | > 10 (w/w) | Light Liquid |
| C | T103 | 19 | Camlock | | Open-ended valve or line | > 10 (w/w) | Light Liquid |
| D | T104 | 1 | FL | Bottom of T104 | Flange | > 10 (w/w) | Light Liquid |
| D | T104 | 2 | Valve | Bottom of T104 | Valve in light liquid service | > 10 (w/w) | Light Liquid |
| D | T104 | 3 | FL | Bottom of T104 | Flange | > 10 (w/w) | Light Liquid |
| D | T104 | 4 | Multi | reducer, tee, pipe | Other connector | > 10 (w/w) | Light Liquid |
| D | T104 | 5 | FL | west side of tee | Flange | > 10 (w/w) | Light Liquid |
| D | T104 | 6 | Multi | pipe from FL #d5 to East Trough | Other connector | > 10 (w/w) | Light Liquid |
| D | T104 | 7 | FL | to East Trough | Flange | > 10 (w/w) | Light Liquid |
| D | T104 | 8 | FL | East Trough | Flange | > 10 (w/w) | Light Liquid |
| D | T104 | 9 | Valve | East Trough | Valve in light liquid service | > 10 (w/w) | Light Liquid |
| D | T104 | 10 | FL | East Trough | Flange | > 10 (w/w) | Light Liquid |
| D | T104 | 11 | Camlock | East Trough | Open-ended valve or line | > 10 (w/w) | Light Liquid |
| D | T104 | 12 | FL | west of valve #D13 | Flange | > 10 (w/w) | Light Liquid |
| D | T104 | 13 | Valve | | Valve in light liquid service | > 10 (w/w) | Light Liquid |
| D | T104 | 14 | FL | east of valve #D13 | Flange | > 10 (w/w) | Light Liquid |
| D | T104 | 15 | Multi | pipe, elblow, | Other connector | > 10 (w/w) | Light Liquid |
| D | T104 | 16 | FL | to east side of tank T104 | Flange | > 10 (w/w) | Light Liquid |
| D | T104 | 17 | Valve | east side bottom of cone on T104 | Valve in light liquid service | > 10 (w/w) | Light Liquid |
| D | T104 | 18 | Multi | elbow, pipe, coupling, camlock | Other connector | > 10 (w/w) | Light Liquid |
| E | T105 | 1 | FL | Bottom of T105 | Flange | > 10 (w/w) | Light Liquid |
| E | T105 | 2 | Valve | Bottom of T105 | Valve in light liquid service | > 10 (w/w) | Light Liquid |
| E | T105 | 3 | FL | Bottom of T105 | Flange | > 10 (w/w) | Light Liquid |
| E | T105 | 4 | Multi | elbow, pipe | Other connector | > 10 (w/w) | Light Liquid |
| E | T105 | 5 | FL | south of line | Flange | > 10 (w/w) | Light Liquid |
| E | T105 | 6 | Multi | from FL #E5 to East Trough | Other connector | > 10 (w/w) | Light Liquid |
| E | T105 | 7 | FL | to East Trough | Flange | > 10 (w/w) | Light Liquid |
| E | T105 | 8 | FL | East Trough | Flange | > 10 (w/w) | Light Liquid |
| E | T105 | 9 | Valve | East Trough | Valve in light liquid service | > 10 (w/w) | Light Liquid |
| E | T105 | 10 | FL | East Trough | Flange | > 10 (w/w) | Light Liquid |
| E | T105 | 11 | Camlock | East Trough | Open-ended valve or line | > 10 (w/w) | Light Liquid |
| F | T112 | 1 | FL | southeast T112 | Flange | > 10 (w/w) | Light Liquid |
| F | T112 | 2 | Valve | southeast T112 | Valve in light liquid service | > 10 (w/w) | Light Liquid |
| F | T112 | 3 | Multi | 2" line southeast of T112 to East Trough | Other connector | > 10 (w/w) | Light Liquid |

US EPA ARCHIVE DOCUMENT

# Transfer Lines

| | Xfer lines | SS Round | | Date monitored: 02 Sep 04 | | PID background reading | |
|---|---|---|---|---|---|---|---|
| **Label** | **COMPONENT/Line** | **Sequence #** | **Pipe Type** | **Description/Note** | **Equip Type** | **Organics** | **HW State** |
| F | T112 | 4 | Valve | East Trough | Valve in light liquid service | > 10 (w/w) | Light Liquid |
| F | T112 | 5 | Camlock | East Trough | Open-ended valve or line | > 10 (w/w) | Light Liquid |
| F | T112 | 6 | Multi | piping from southwest bottom T112 to West Trough | Other connector | > 10 (w/w) | Light Liquid |
| F | T112 | 7 | FL | Bottom of T112 | Flange | > 10 (w/w) | Light Liquid |
| F | T112 | 8 | Valve | Bottom of T113 | Valve in light liquid service | > 10 (w/w) | Light Liquid |
| F | T112 | 9 | Valve | West Trough | Valve in light liquid service | > 10 (w/w) | Light Liquid |
| F | T112 | 10 | Camlock | West Trough | Open-ended valve or line | > 10 (w/w) | Light Liquid |
| G | Open End T104-T102 | 1 | Multi | 2" piping with one end close to T104 and other end close to T | Other connector | > 10 (w/w) | Light Liquid |
| H | Open End East Trough-West Trough | 1 | Multi | 2" piping | Other connector | > 10 (w/w) | Light Liquid |
| H | Open End East Trough-West Trough | 2 | Valve | East Trough | Valve in light liquid service | > 10 (w/w) | Light Liquid |
| H | Open End East Trough-West Trough | 3 | Camlock | East Trough | Open-ended valve or line | > 10 (w/w) | Light Liquid |
| H | Open End East Trough-West Trough | 4 | Valve | West Trough | Valve in light liquid service | > 10 (w/w) | Light Liquid |
| H | Open End East Trough-West Trough | 5 | Camlock | West Trough | Open-ended valve or line | > 10 (w/w) | Light Liquid |
| I | Open End West Trough-TFE-DC | 1 | Multi | 2" piping from DC (north wall) to West Trough | Other connector | > 10 (w/w) | Light Liquid |
| I | Open End West Trough-TFE-DC | 2 | Valve | DC area north wall | Valve in light liquid service | > 10 (w/w) | Light Liquid |
| I | Open End West Trough-TFE-DC | 3 | Camlock | DC area north wall | Open-ended valve or line | > 10 (w/w) | Light Liquid |
| I | Open End West Trough-TFE-DC | 4 | Valve | Area bottom of TFE | Valve in light liquid service | > 10 (w/w) | Light Liquid |
| I | Open End West Trough-TFE-DC | 5 | Multi | Area bottom of TFE, camlock, coupling, up to tee | Other connector | > 10 (w/w) | Light Liquid |
| I | Open End West Trough-TFE-DC | 6 | Multi | 2" piping from tee to West Trough | Other connector | > 10 (w/w) | Light Liquid |
| I | Open End West Trough-TFE-DC | 7 | Valve | West Trough | Valve in light liquid service | > 10 (w/w) | Light Liquid |
| I | Open End West Trough-TFE-DC | 8 | Camlock | West Trough | Open-ended valve or line | > 10 (w/w) | Light Liquid |
| J | Vacpot feed-East Trough-West Trough-Tank Farm C1 | 1 | Multi | 2" piping from VP top inlet FL to Tank Farm C1 | Other connector | > 10 (w/w) | Light Liquid |

US EPA ARCHIVE DOCUMENT

# Transfer Lines

| | Xfer lines | SS Round | | Date monitored: 02 Sep 04 | | PID background reading | |
|---|---|---|---|---|---|---|---|
| **Label** | **COMPONENT/Line** | **Sequence #** | **Pipe Type** | **Description/Note** | **Equip Type** | **Organics** | **HW State** |
| J | Vacpot feed-East Trough-West Trough-Tank Farm C1 | 2 | Multi | 2" piping from VP bottom inlet tee to West Trough tee | Other connector | > 10 (w/w) | Light Liquid |
| J | Vacpot feed-East Trough-West Trough-Tank Farm C1 | 3 | Valve | West Trough | Valve in light liquid service | > 10 (w/w) | Light Liquid |
| J | Vacpot feed-East Trough-West Trough-Tank Farm C1 | 4 | Multi | West Trough (elbow, camlock, etc.) | Other connector | > 10 (w/w) | Light Liquid |
| J | Vacpot feed-East Trough-West Trough-Tank Farm C1 | 5 | Multi | from West Trough tee to East Trough valve | Other connector | > 10 (w/w) | Light Liquid |
| J | Vacpot feed-East Trough-West Trough-Tank Farm C1 | 6 | Valve | East Trough | Valve in light liquid service | > 10 (w/w) | Light Liquid |
| J | Vacpot feed-East Trough-West Trough-Tank Farm C1 | 7 | Multi | East Trough (elbow, camlock, etc.) | Other connector | > 10 (w/w) | Light Liquid |
| J | Vacpot feed-East Trough-West Trough-Tank Farm C1 | 8 | Valve | South side Tank Farm C1, 3way valve | Valve in light liquid service | > 10 (w/w) | Light Liquid |
| J | Vacpot feed-East Trough-West Trough-Tank Farm C1 | 9 | Multi | 2" piping from 3way valve to T124 line | Other connector | > 10 (w/w) | Light Liquid |
| J | Vacpot feed-East Trough-West Trough-Tank Farm C1 | 10 | Filter | 2" piping from 3way valve to filter, to air pump on north side of Tank Farm C1 | Other connector | > 10 (w/w) | Light Liquid |
| J | Vacpot feed-East Trough-West Trough-Tank Farm C1 | 11 | FL | Top of Pump | Flange | > 10 (w/w) | Light Liquid |
| J | Vacpot feed-East Trough-West Trough-Tank Farm C1 | 12 | Pump | north side of Tank Farm C1 | Pump in light liquid service | > 10 (w/w) | Light Liquid |
| J | Vacpot feed-East Trough-West Trough-Tank Farm C1 | 13 | Valve | from tee, norh side of Tank Farm C1 | Valve in light liquid service | > 10 (w/w) | Light Liquid |
| J | Vacpot feed-East Trough-West Trough-Tank Farm C1 | 14 | Multi | piping from vlave #J13 (elbow, pipe, camlock) | Other connector | > 10 (w/w) | Light Liquid |
| K | East Trough-Tank Farm C2 Trough | 1 | Multi | East Trough | Other connector | > 10 (w/w) | Light Liquid |
| K | East Trough-Tank Farm C2 Trough | 2 | Valve | East Trough | Valve in light liquid service | > 10 (w/w) | Light Liquid |
| K | East Trough-Tank Farm C2 Trough | 3 | Multi | 2" piping from East Trough to Tank Farm C2 Trough | Other connector | > 10 (w/w) | Light Liquid |
| K | East Trough-Tank Farm C2 Trough | 4 | Valve | Tank Farm C2 Trough | Valve in light liquid service | > 10 (w/w) | Light Liquid |
| K | East Trough-Tank Farm C2 Trough | 5 | Camlock | Tank Farm C2 Trough | Open-ended valve or line | > 10 (w/w) | Light Liquid |

US EPA ARCHIVE DOCUMENT

# Transfer Lines

| | Xfer lines | SS Round | | Date monitored: 02 Sep 04 | | PID background reading | |
|---|---|---|---|---|---|---|---|
| **Label** | **COMPONENT/Line** | **Sequence #** | **Pipe Type** | **Description/Note** | **Equip Type** | **Organics** | **HW State** |
| L | East Trough-T113 | 1 | Valve | East Trough | Valve in light liquid service | > 10 (w/w) | Light Liquid |
| L | East Trough-T113 | 2 | Camlock | East Trough | Open-ended valve or line | > 10 (w/w) | Light Liquid |
| L | East Trough-T113 | 3 | Multi | 2" piping from East Trough to T113 | Other connector | > 10 (w/w) | Light Liquid |
| L | East Trough-T113 | 4 | Valve | southeast of T113 | Valve in light liquid service | > 10 (w/w) | Light Liquid |
| L | East Trough-T113 | 5 | FL | southeast of T113 | | > 10 (w/w) | Light Liquid |
| L | East Trough-T113 | 6 | Multi | 2" piping from tee south of T121 | Other connector | > 10 (w/w) | Light Liquid |
| L | East Trough-T113 | 7 | Valve | Tank Farm C2 Trough | Valve in light liquid service | > 10 (w/w) | Light Liquid |
| L | East Trough-T113 | 8 | Multi | Tank Farm C2 Trough | Other connector | > 10 (w/w) | Light Liquid |
| M | East Trough-Tank Farm C2 Trough | 1 | Valve | East Trough | Valve in light liquid service | > 10 (w/w) | Light Liquid |
| M | East Trough--Tank Farm C1-Tank Farm C2 Trough | 2 | Camlock | East Trough | Open-ended valve or line | > 10 (w/w) | Light Liquid |
| M | East Trough--Tank Farm C1-Tank Farm C2 Trough | 3 | Multi | 2" piping from East Trough to Tank Farm C2 Trough | Other connector | > 10 (w/w) | Light Liquid |
| M | East Trough--Tank Farm C1-Tank Farm C2 Trough | 4 | Valve | Tank Farm C1 southwest wall | Valve in light liquid service | > 10 (w/w) | Light Liquid |
| M | East Trough--Tank Farm C1-Tank Farm C2 Trough | 5 | Valve | Tank Farm C2 Trough | Valve in light liquid service | > 10 (w/w) | Light Liquid |
| M | East Trough--Tank Farm C1-Tank Farm C2 Trough | 6 | Multi | Tank Farm C2 Trough | Other connector | > 10 (w/w) | Light Liquid |
| N | Tank Farm C2 Trough-Tank Farm C4 | 1 | Valve | Tank Farm C2 Trough | Valve in light liquid service | > 10 (w/w) | Light Liquid |
| N | Tank Farm C2 Trough-Tank Farm C4 | 2 | Camlock | Tank Farm C2 Trough | Open-ended valve or line | > 10 (w/w) | Light Liquid |
| N | Tank Farm C2 Trough-Tank Farm C4 | 3 | Multi | 2" piping from Tank Farm C2 Trough to east Tank Farm C4 | Other connector | > 10 (w/w) | Light Liquid |
| N | Tank Farm C2 Trough-Tank Farm C4 | 4 | Valve | Tank Farm C4 east | Valve in light liquid service | > 10 (w/w) | Light Liquid |
| N | Tank Farm C2 Trough-Tank Farm C4 | 5 | Camlock | Tank Farm C4 east | Open-ended valve or line | > 10 (w/w) | Light Liquid |
| O | Portable Pump | 1 | Pump | Portable pump with filter | | > 10 (w/w) | Light Liquid |
| P | Portable Pump | 1 | Pump | Portable pump with filter | | > 10 (w/w) | Light Liquid |
| Q | Portable Pump | 1 | Pump | Portable pump with filter | | > 10 (w/w) | Light Liquid |
| R | Filter | 1 | Filter | Filter system between T201 and T202 | Other connector | > 10 (w/w) | Light Liquid |
| S | T121 | 1 | FL | northeast side bottom T121 | Flange | > 10 (w/w) | Light Liquid |
| S | T121 | 2 | Valve | northeast side bottom T121 | Valve in light liquid service | > 10 (w/w) | Light Liquid |
| S | T121 | 3 | Multi | 2" piping | Other connector | > 10 (w/w) | Light Liquid |

US EPA ARCHIVE DOCUMENT

# Transfer Lines

| | Xfer lines | SS Round | | Date monitored: 02 Sep 04 | | PID background reading | |
|---|---|---|---|---|---|---|---|
| **Label** | **COMPONENT/Line** | **Sequence #** | **Pipe Type** | **Description/Note** | **Equip Type** | **Organics** | **HW State** |
| S | T121 | 4 | Valve | northeast side T121 | Valve in light liquid service | > 10 (w/w) | Light Liquid |
| S | T121 | 5 | Camlock | northeast side T121 | Open-ended valve or line | > 10 (w/w) | Light Liquid |
| S | T121 | 6 | Valve | east T121 | Valve in light liquid service | > 10 (w/w) | Light Liquid |
| S | T121 | 7 | Camlock | east T121 | Open-ended valve or line | > 10 (w/w) | Light Liquid |
| T | T122 | 1 | FL | northeast side bottom T122 | Flange | > 10 (w/w) | Light Liquid |
| T | T122 | 2 | Valve | northeast side bottom T122 | Valve in light liquid service | > 10 (w/w) | Light Liquid |
| T | T122 | 3 | Multi | 2" piping | Other connector | > 10 (w/w) | Light Liquid |
| T | T122 | 4 | Valve | northeast side T122 | Valve in light liquid service | > 10 (w/w) | Light Liquid |
| T | T122 | 5 | Camlock | northeast side T122 | Open-ended valve or line | > 10 (w/w) | Light Liquid |
| T | T122 | 6 | Valve | east T121 | Valve in light liquid service | > 10 (w/w) | Light Liquid |
| T | T122 | 7 | Camlock | east T121 | Open-ended valve or line | > 10 (w/w) | Light Liquid |
| U | T123 | 1 | FL | northwest side bottom T123 | Flange | > 10 (w/w) | Light Liquid |
| U | T123 | 2 | Valve | northwest side bottom T123 | Valve in light liquid service | > 10 (w/w) | Light Liquid |
| U | T123 | 3 | Multi | | | > 10 (w/w) | Light Liquid |
| U | T123 | 4 | Valve | northwest side T123 | Valve in light liquid service | > 10 (w/w) | Light Liquid |
| U | T123 | 5 | Camlock | northwest side T123 | Open-ended valve or line | > 10 (w/w) | Light Liquid |
| U | T123 | 6 | Valve | west T123 | Valve in light liquid service | > 10 (w/w) | Light Liquid |
| U | T123 | 7 | Camlock | west T123 | Open-ended valve or line | > 10 (w/w) | Light Liquid |
| V | T124 | 1 | FL | northwest side bottom T124 | Flange | > 10 (w/w) | Light Liquid |
| V | T124 | 2 | Valve | northwest side bottom T124 | Valve in light liquid service | > 10 (w/w) | Light Liquid |
| V | T124 | 3 | Multi | 2" piping from valve #V2 to outlet (north wall Tank Farm C1) | Other connector | > 10 (w/w) | Light Liquid |
| V | T124 | 4 | Valve | 3way valve T124 - Vacpot - Pump | Valve in light liquid service | > 10 (w/w) | Light Liquid |
| V | T124 | 5 | Valve | north wall Tank Farm C1 | Valve in light liquid service | > 10 (w/w) | Light Liquid |
| V | T124 | 6 | Camlock | north wall Tank Farm C1 | Open-ended valve or line | > 10 (w/w) | Light Liquid |
| W | T113 | 1 | Valve | 3" gate valve north of T113 | Valve in light liquid service | > 10 (w/w) | Light Liquid |
| W | T113 | 2 | Valve | 2" gate valve north of T113 | Valve in light liquid service | > 10 (w/w) | Light Liquid |
| W | T113 | 3 | FL | north of T113 | Flange | > 10 (w/w) | Light Liquid |
| W | T113 | 4 | Camlock | north of T114 | Open-ended valve or line | > 10 (w/w) | Light Liquid |
| W | T113 | 5 | Multi | piping from T113 north to east side of T113 | Other connector | > 10 (w/w) | Light Liquid |
| X | Tank Farm C2 Trough-Tank Farm C1 NE corner | 1 | Multi | 2" piping from Tank Farm C2 Trough to Tank Farm C1 northeast corner | Other connector | > 10 (w/w) | Light Liquid |
| X | Tank Farm C2 Trough-Tank Farm C1 NE corner | 2 | Valve | Tank Farm C2 Trough | Valve in light liquid service | > 10 (w/w) | Light Liquid |
| X | Tank Farm C2 Trough-Tank Farm C1 NE corner | 3 | Camlock | Tank Farm C2 Trough | Open-ended valve or line | > 10 (w/w) | Light Liquid |
| X | Tank Farm C2 Trough-Tank Farm C1 NE corner | 4 | Valve | Tank Farm C1 NE corner | Valve in light liquid service | > 10 (w/w) | Light Liquid |

US EPA ARCHIVE DOCUMENT

# Transfer Lines

| | Xfer lines | SS Round | | Date monitored: 02 Sep 04 | | PID background reading | |
|---|---|---|---|---|---|---|---|
| **Label** | **COMPONENT/Line** | **Sequence #** | **Pipe Type** | **Description/Note** | **Equip Type** | **Organics** | **HW State** |
| X | Tank Farm C2 Trough-Tank Farm C1 NE corner | 5 | Camlock | Tank Farm C1 NE corner | Open-ended valve or line | > 10 (w/w) | Light Liquid |
| Y | Tank Farm C1-Rail Spur | 1 | Valve | Tank Farm C1 west wall | Valve in light liquid service | > 10 (w/w) | Light Liquid |
| Y | Tank Farm C1-Rail Spur | 2 | Camlock | Tank Farm C1 west wall | Open-ended valve or line | > 10 (w/w) | Light Liquid |
| Y | Tank Farm C1-Rail Spur | 3 | Multi | 2" piping from Tank Farm C1 to east wall of Drum Storage Bl | Other connector | > 10 (w/w) | Light Liquid |
| Y | Tank Farm C1-Rail Spur | 4 | Valve | east wall Drum Storage Bldg#1 | Valve in light liquid service | > 10 (w/w) | Light Liquid |
| Y | Tank Farm C1-Rail Spur | 5 | Camlock | east wall Drum Storage Bldg#1 | Open-ended valve or line | > 10 (w/w) | Light Liquid |
| Y | Tank Farm C1-Rail Spur | 6 | Valve | east wall Drum Storage Bldg#1 | Valve in light liquid service | > 10 (w/w) | Light Liquid |
| Y | Tank Farm C1-Rail Spur | 7 | Camlock | east wall Drum Storage Bldg#1 | Open-ended valve or line | > 10 (w/w) | Light Liquid |
| Y | Tank Farm C1-Rail Spur | 8 | Valve | east wall Drum Storage Bldg#1, sampling valve | Valve in light liquid service | > 10 (w/w) | Light Liquid |
| Y | Tank Farm C1-Rail Spur | 9 | Multi | east wall Drum Storage Bldg#1, 3" piping to railspur | Other connector | > 10 (w/w) | Light Liquid |
| Y | Tank Farm C1-Rail Spur | 10 | Valve | east wall Drum Storage Bldg#1 | Valve in light liquid service | > 10 (w/w) | Light Liquid |
| Y | Tank Farm C1-Rail Spur | 11 | Camlock | east wall Drum Storage Bldg#1 | Open-ended valve or line | > 10 (w/w) | Light Liquid |
| Y | Tank Farm C1-Rail Spur | 12 | Valve | north railspur | Valve in light liquid service | > 10 (w/w) | Light Liquid |
| Y | Tank Farm C1-Rail Spur | 13 | Camlock | north railspur | Open-ended valve or line | > 10 (w/w) | Light Liquid |
| Y | Tank Farm C1-Rail Spur | 14 | Valve | north railspur | Valve in light liquid service | > 10 (w/w) | Light Liquid |
| Y | Tank Farm C1-Rail Spur | 15 | Valve | middle railspur | Valve in light liquid service | > 10 (w/w) | Light Liquid |
| Y | Tank Farm C1-Rail Spur | 16 | Camlock | middle railspur | Open-ended valve or line | > 10 (w/w) | Light Liquid |
| Y | Tank Farm C1-Rail Spur | 17 | Valve | south railspur | Valve in light liquid service | > 10 (w/w) | Light Liquid |
| Y | Tank Farm C1-Rail Spur | 18 | Valve | south railspur | Valve in light liquid service | > 10 (w/w) | Light Liquid |
| Y | Tank Farm C1-Rail Spur | 19 | Camlock | south railspur | Open-ended valve or line | > 10 (w/w) | Light Liquid |
| Z | VP Receiver-West Trough-Tank Farm C3-T121 | 1 | Multi | 1" piping from receiver | Other connector | > 10 (w/w) | Light Liquid |
| Z | VP Receiver-West Trough-Tank Farm C3-T121 | 2 | Valve | top of T121 | Valve in light liquid service | > 10 (w/w) | Light Liquid |
| Z | VP Receiver-West Trough-Tank Farm C3-T121 | 3 | Valve | West wall Tank Farm C3 | Valve in light liquid service | > 10 (w/w) | Light Liquid |
| Z | VP Receiver-West Trough-Tank Farm C3-T121 | 4 | Camlock | West wall Tank Farm C3 | Open-ended valve or line | > 10 (w/w) | Light Liquid |
| Z | VP Receiver-West Trough-Tank Farm C3-T121 | 5 | Multi | 1" piping from receiver to West Trough (goes between 201 ar | Other connector | > 10 (w/w) | Light Liquid |
| Z | VP Receiver-West Trough-Tank Farm C3-T121 | 6 | Valve | West Trough | Valve in light liquid service | > 10 (w/w) | Light Liquid |
| Z | VP Receiver-West Trough-Tank Farm C3-T121 | 7 | Camlock | West Trough | Open-ended valve or line | > 10 (w/w) | Light Liquid |
| | | | | | | | |
| | | | | | | | |

US EPA ARCHIVE DOCUMENT

# Transfer Lines

| | Xfer lines | SS Round | | Date monitored: 02 Sep 04 | | PID background reading | |
|---|---|---|---|---|---|---|---|
| Label | COMPONENT/Line | Sequence # | Pipe Type | Description/Note | Equip Type | Organics | HW State |
| | | | | | | | |
| | | | | | | | |
| | | | | | | | |
| | | | | | | | |
| | | | | | | | |
| | | | | | | | |
| | | | | | | | |
| | | | | | | | |

US EPA ARCHIVE DOCUMENT

# Transfer Lines

| : 9.3-16.9ppm | | | | | |
|---|---|---|---|---|---|
| **Compliance Method** | **PID Reading** | **Leak? Y/N** | **Work Order #** | **Retest Date** | **Leak Fixed?** |
| Monitor if evidence of leak | | | | | |
| Monitor if evidence of leak | | | | | |
| Monthly LDAR | BG | | | | |
| Monitor if evidence of leak | | | | | |
| Monitor if evidence of leak | | | | | |
| Monitor if evidence of leak | | | | | |
| Monitor if evidence of leak | | | | | |
| Monthly LDAR | BG | | | | |
| Monitor if evidence of leak | | | | | |
| Monitor if evidence of leak | | | | | |
| Second valve or cap | | | | | |
| Monitor if evidence of leak | | | | | |
| Monitor if evidence of leak | | | | | |
| Monthly LDAR | BG | | | | |
| Monitor if evidence of leak | | | | | |
| Monitor if evidence of leak | | | | | |
| Monitor if evidence of leak | | | | | |
| Monitor if evidence of leak | | | | | |
| Monthly LDAR | BG | | | | |
| Monitor if evidence of leak | | | | | |
| Monitor if evidence of leak | | | | | |
| Monitor if evidence of leak | | | | | |
| Second valve or cap | | | | | |
| Monitor if evidence of leak | | | | | |
| Monthly LDAR | BG | | | | |
| Monitor if evidence of leak | | | | | |
| Monitor if evidence of leak | | | | | |
| Monitor if evidence of leak | | | | | |
| Monitor if evidence of leak | | | | | |
| Monitor if evidence of leak | | | | | |
| Monitor if evidence of leak | | | | | |
| Monthly LDAR | BG | | | | |
| Monitor if evidence of leak | | | | | |
| Second valve or cap | | | | | |
| Monitor if evidence of leak | | | | | |
| Monthly LDAR | BG | | | | |
| Monitor if evidence of leak | | | | | |

US EPA ARCHIVE DOCUMENT

# Transfer Lines

| : 9.3-16.9ppm | | | | | |
|---|---|---|---|---|---|
| **Compliance Method** | **PID Reading** | **Leak? Y/N** | **Work Order #** | **Retest Date** | **Leak Fixed?** |
| Monitor if evidence of leak | | | | | |
| Monitor if evidence of leak | | | | | |
| Monitor if evidence of leak | | | | | |
| Monthly LDAR | BG | | | | |
| Second valve or cap | | | | | |
| Monitor if evidence of leak | | | | | |
| Monthly LDAR | BG | | | | |
| Monitor if evidence of leak | | | | | |
| Monitor if evidence of leak | | | | | |
| Monitor if evidence of leak | | | | | |
| Monitor if evidence of leak | | | | | |
| Monitor if evidence of leak | | | | | |
| Monitor if evidence of leak | | | | | |
| Monthly LDAR | BG | | | | |
| Monitor if evidence of leak | | | | | |
| Second valve or cap | | | | | |
| Monitor if evidence of leak | | | | | |
| Monthly LDAR | BG | | | | |
| Monitor if evidence of leak | | | | | |
| Monitor if evidence of leak | | | | | |
| Monitor if evidence of leak | | | | | |
| Monthly LDAR | BG | | | | |
| Monitor if evidence of leak | | | | | |
| Monitor if evidence of leak | | | | | |
| Monthly LDAR | BG | | | | |
| Monitor if evidence of leak | | | | | |
| Monitor if evidence of leak | | | | | |
| Monitor if evidence of leak | | | | | |
| Monitor if evidence of leak | | | | | |
| Monitor if evidence of leak | | | | | |
| Monitor if evidence of leak | | | | | |
| Monthly LDAR | BG | | | | |
| Monitor if evidence of leak | | | | | |
| Second valve or cap | | | | | |
| Monitor if evidence of leak | | | | | |
| Monthly LDAR | BG | | | | |
| Monitor if evidence of leak | | | | | |

US EPA ARCHIVE DOCUMENT

# Transfer Lines

| ı: 9.3-16.9ppm | | | | | |
|---|---|---|---|---|---|
| **Compliance Method** | **PID Reading** | **Leak? Y/N** | **Work Order #** | **Retest Date** | **Leak Fixed?** |
| Monthly LDAR | BG | | | | |
| Second valve or cap | | | | | |
| Monitor if evidence of leak | | | | | |
| Monitor if evidence of leak | | | | | |
| Monthly LDAR | BG | | | | |
| Monthly LDAR | BG | | | | |
| Second valve or cap | | | | | |
| Monitor if evidence of leak | | | | | |
| Monitor if evidence of leak | | | | | |
| Monthly LDAR | BG | | | | |
| Second valve or cap | | | | | |
| Monthly LDAR | BG | | | | |
| Second valve or cap | | | | | |
| Monitor if evidence of leak | | | | | |
| Monthly LDAR | BG | | | | |
| Second valve or cap | | | | | |
| Monthly LDAR | BG | | | | |
| Monitor if evidence of leak | | | | | |
| Monitor if evidence of leak | | | | | |
| Monthly LDAR | BG | | | | |
| Second valve or cap | | | | | |
| Monitor if evidence of leak | | | | | |

US EPA ARCHIVE DOCUMENT

# Transfer Lines

| y: 9.3-16.9ppm | | | | | |
|---|---|---|---|---|---|
| Compliance Method | PID Reading | Leak? Y/N | Work Order # | Retest Date | Leak Fixed? |
| Monitor if evidence of leak | | | | | |
| Monthly LDAR | | | | | |
| Monitor if evidence of leak | | | | | |
| Monitor if evidence of leak | | | | | |
| Monthly LDAR | | | | 23-Jun-04 | Y |
| Monitor if evidence of leak | | | | | |
| Monthly LDAR | BG | | | | |
| Monitor if evidence of leak | | | | | |
| Monitor if evidence of leak | | | | | |
| Monitor if evidence of leak | | | | | |
| Monthly LDAR | BG | | | | |
| Monthly LDAR | BG | | | | |
| Monitor if evidence of leak | | | | | |
| Monitor if evidence of leak | | | | | |
| Monthly LDAR | BG | | | | |
| Monitor if evidence of leak | | | | | |
| Monthly LDAR | BG | | | | |
| Second valve or cap | | | | | |

US EPA ARCHIVE DOCUMENT

# Transfer Lines

| ı: 9.3-16.9ppm | | | | | |
|---|---|---|---|---|---|
| **Compliance Method** | **PID Reading** | **Leak? Y/N** | **Work Order #** | **Retest Date** | **Leak Fixed?** |
| Monthly LDAR | BG | | | | |
| Second valve or cap | | | | | |
| Monitor if evidence of leak | | | | | |
| Monthly LDAR | BG | | | | |
| Monitor if evidence of leak | | | | | |
| Monitor if evidence of leak | | | | | |
| Monthly LDAR | BG | | | | |
| Monitor if evidence of leak | | | | | |
| Monthly LDAR | BG | | | | |
| Second valve or cap | | | | | |
| Monitor if evidence of leak | | | | | |
| Monthly LDAR | BG | | | | |
| Monthly LDAR | BG | | | | |
| Monitor if evidence of leak | | | | | |
| Monthly LDAR | BG | | | | |
| Second valve or cap | | | | | |
| Monitor if evidence of leak | | | | | |
| Monthly LDAR | BG | | | | |
| Second valve or cap | BG | | | | |
| Monthly LDAR | BG | | | | |
| Monthly LDAR | BG | | | | |
| Monthly LDAR | BG | | | | |
| Monitor if evidence of leak | | | | | |
| Monitor if evidence of leak | | | | | |
| Monthly LDAR | BG | | | | |
| Monitor if evidence of leak | | | | | |

US EPA ARCHIVE DOCUMENT

# Transfer Lines

| : 9.3-16.9ppm | | | | | |
|---|---|---|---|---|---|
| **Compliance Method** | **PID Reading** | **Leak? Y/N** | **Work Order #** | **Retest Date** | **Leak Fixed?** |
| Monthly LDAR | BG | | | | |
| Second valve or cap | | | | | |
| Monthly LDAR | | | | | |
| Second valve or cap | | | | | |
| Monitor if evidence of leak | | | | | |
| Monthly LDAR | BG | | | | |
| Monitor if evidence of leak | BG | | | | |
| Monthly LDAR | BG | | | | |
| Second valve or cap | | | | | |
| Monthly LDAR | BG | | | | |
| Second valve or cap | | | | | |
| Monitor if evidence of leak | | | | | |
| Monthly LDAR | BG | | | | |
| Monitor if evidence of leak | | | | | |
| Monthly LDAR | BG | | | | |
| Second valve or cap | | | | | |
| Monthly LDAR | BG | | | | |
| Second valve or cap | | | | | |
| Monitor if evidence of leak | | | | | |
| Monthly LDAR | BG | | | | |
| Monitor if evidence of leak | | | | | |
| Monthly LDAR | BG | | | | |
| Monthly LDAR | BG | | | | |
| Second valve or cap | | | | | |
| Monthly LDAR | | | | | |
| Monthly LDAR | BG | | | | |
| Monitor if evidence of leak | | | | | |
| Second valve or cap | | | | | |
| Monitor if evidence of leak | | | | | |
| Monitor if evidence of leak | | | | | |
| Monthly LDAR | BG | | | | |
| Second valve or cap | | | | | |
| Monthly LDAR | BG | | | | |

US EPA ARCHIVE DOCUMENT

# Transfer Lines

| : 9.3-16.9ppm | | | | | |
|---|---|---|---|---|---|
| **Compliance Method** | **PID Reading** | **Leak? Y/N** | **Work Order #** | **Retest Date** | **Leak Fixed?** |
| Second valve or cap | | | | | |
| Monthly LDAR | BG | | | | |
| Second valve or cap | | | | | |
| Monitor if evidence of leak | | | | | |
| Monthly LDAR | BG | | | | |
| Second valve or cap | | | | | |
| Monthly LDAR | BG | | | | |
| Second valve or cap | | | | | |
| Monthly LDAR | BG | | | | |
| Monitor if evidence of leak | | | | | |
| Monthly LDAR | BG | | | | |
| Second valve or cap | | | | | |
| Monthly LDAR | BG | | | | |
| Second valve or cap | | | | | |
| Monthly LDAR | BG | | | | |
| Monthly LDAR | BG | | | | |
| Second valve or cap | | | | | |
| Monthly LDAR | BG | | | | |
| Monthly LDAR | BG | | | | |
| Second valve or cap | | | | | |
| Monitor if evidence of leak | | | | | |
| Monthly LDAR | BG | | | | |
| Monthly LDAR | BG | | | | |
| Second valve or cap | | | | | |
| Monitor if evidence of leak | | | | | |
| Monthly LDAR | BG | | | | |
| Second valve or cap | | | | | |
| | | | | | |
| | | | | | |

US EPA ARCHIVE DOCUMENT

# Transfer Lines

| y: 9.3-16.9ppm | | | | | |
|---|---|---|---|---|---|
| Compliance Method | PID Reading | Leak? Y/N | Work Order # | Retest Date | Leak Fixed? |
| | | | | | |
| | | | | | |
| | | | | | |
| | | | | | |
| | | | | | |
| | | | | | |
| | green = no leaks | | | | |
| | red = leak detected | | | | |

US EPA ARCHIVE DOCUMENT

# VOC Recovery System

| VOC SYSTEM / RECTANGLE TAGS | | | | | | |
|---|---|---|---|---|---|---|
| **Label** | **COMPONENT/Line** | **Sequence #** | **Pipe Type** | **Description/Note** | **Equip Type** | **Organics** |
| B | S1 | 1 | Flanged Tee | Vent top of S1 | Other connector | > 10 (w/w) |
| B | S1 | 2 | PRV | Vent top of S1,Top of Tee B1 | Pressure relief devices | > 10 (w/w) |
| B | S1 | 3 | Air Valve | Vent top of S1, north side of Tee B1 | Valve in gas/vapor service | > 10 (w/w) |
| B | S1 | 32 | Pipe | Vent top of S1, 3"OD | Other connector | > 10 (w/w) |
| B | S1 | 33 | FL | Vent top of S1, bottom of tee B1 | Flange | > 10 (w/w) |
| B | S1 | 34 | FL | Vent top of S1, top of tee B1 | Flange | > 10 (w/w) |
| B | S1 | 35 | FL | Vent top of S1, north of Tee B1 | Flange | > 10 (w/w) |
| B | S1 | 36 | FL | Vent top of S1, air valve | Flange | > 10 (w/w) |
| B | S1 | 4 | Coupling | Top outlet for PT | Other connector | > 10 (w/w) |
| B | S1 | 5 | Bushing | Top outlet for PT,1" x 3/4" | Other connector | > 10 (w/w) |
| B | S1 | 6 | Bushing | Top outlet for PT, 3/4" x 1/4" | Other connector | > 10 (w/w) |
| B | S1 | 7 | 90 | Top outlet for PT | Other connector | > 10 (w/w) |
| B | S1 | 8 | 1/4 SS Line | Top outlet for PT | Other connector | > 10 (w/w) |
| B | S1 | 9 | PT | Top outlet for PT | Other connector | > 10 (w/w) |
| B | S1 | 10 | FL | Top of Level Transmitter, west side S1 | Flange | > 10 (w/w) |
| B | S1 | 11 | FL | Bottom of Level Transmitter, west side S1 | Flange | > 10 (w/w) |
| B | S1 | 39 | Coupling | Top of Level Transmitter, west side S1 | Other connector | > 10 (w/w) |
| B | S1 | 40 | NIP | Top of Level Transmitter, west side S1 | Other connector | > 10 (w/w) |
| B | S1 | 41 | Pipe | Bottom of Level Transmitter, west side S1, 3.5"L | Other connector | > 10 (w/w) |
| B | S1 | 12 | Coupling | for TT, west side S1 | Other connector | > 10 (w/w) |
| B | S1 | 13 | TT | Temperature Transmitter, , west side S1 | Other connector | > 10 (w/w) |
| B | S2 | 37 | Bushing | for TT, west side S1 | Other connector | > 10 (w/w) |
| B | S3 | 38 | NIP | for TT, west side S1 | Other connector | > 10 (w/w) |
| B | S1 | 14 | Coupling | for P-gage, east side S1 | Other connector | > 10 (w/w) |
| B | S1 | 15 | Bushing | for P-gage, east side S1, 3/4" x 1/4" | Other connector | > 10 (w/w) |
| B | S1 | 16 | NIP | for P-gage, east side S1, 1" | Other connector | > 10 (w/w) |
| B | S1 | 17 | 90 | for P-gage, east side S1 | Other connector | > 10 (w/w) |
| B | S1 | 18 | NIP | for P-gage, east side S1, 2" | Other connector | > 10 (w/w) |
| B | S1 | 19 | 90 | for P-gage, east side S1 | Other connector | > 10 (w/w) |
| B | S1 | 20 | NIP | for P-gage, east side S1 | Other connector | > 10 (w/w) |
| B | S1 | 21 | VALVE | for P-gage, east side S1 | Valve in gas/vapor service | > 10 (w/w) |
| B | S1 | 22 | PG | for P-gage, east side S1 | Other connector | > 10 (w/w) |

US EPA ARCHIVE DOCUMENT

# VOC Recovery System

| VOC SYSTEM / RECTANGLE TAGS | | | | | | |
|---|---|---|---|---|---|---|
| **Label** | **COMPONENT/Line** | **Sequence #** | **Pipe Type** | **Description/Note** | **Equip Type** | **Organics** |
| B | S1 | 23 | VALVE | Top of SG, north side S1 | Valve in gas/vapor service | > 10 (w/w) |
| B | S1 | 24 | VALVE | Bottom of SG, north side S1 | Valve in gas/vapor service | > 10 (w/w) |
| B | S1 | 25 | Plug | Bottom of Bottom Valve of SG | Other connector | > 10 (w/w) |
| B | S1 | 42 | Coupling | Top of SG, north side S1 | Other connector | > 10 (w/w) |
| B | S1 | 43 | Coupling | Bottom of SG, north side S1 | Other connector | > 10 (w/w) |
| B | S1 | 44 | LG | level gage/sight glass | Other connector | > 10 (w/w) |
| B | S1 | 26 | Coupling | Outlet NW side S1 for Valve B28 | Other connector | > 10 (w/w) |
| B | S1 | 27 | NIP | Outlet NW side S1 for Valve B28, 1" | Other connector | > 10 (w/w) |
| B | S1 | 28 | VALVE | Outlet NW side S1 | Valve in gas/vapor service | > 10 (w/w) |
| B | S1 | 29 | Bushing | Outlet NW side S1 for Valve B28, 1/2" x 3/8" | Other connector | > 10 (w/w) |
| B | S1 | 30 | 3/8" Hose Barb | Outlet NW side S1 for Valve B28 | Open-ended valve or line | > 10 (w/w) |
| B | S1 | 31 | Plastic Tubing | Outlet NW side S1 for Valve B28 | Other connector | > 10 (w/w) |
| C | S1 to Compressors | 1 | FL | Top Outlet from S1 | Flange | > 10 (w/w) |
| C | S1 to Compressors | 2 | Pipe | 3"OD on top of S1 | Other connector | > 10 (w/w) |
| C | S1 to Compressors | 3 | 90 | on FL C2 on S1 | Other connector | > 10 (w/w) |
| C | S1 to Compressors | 4 | Pipe | 3"OD, 35"L | Other connector | > 10 (w/w) |
| C | S1 to Compressors | 5 | 90 | down | Other connector | > 10 (w/w) |
| C | S1 to Compressors | 6 | reducer | 3" to 2" down | Other connector | > 10 (w/w) |
| C | S1 to Compressors | 7 | Tee | | Other connector | > 10 (w/w) |
| C | S1 to Compressors | 8 | Pipe | down to Compressor A | Other connector | > 10 (w/w) |
| C | S1 to Compressors | 9 | 90 | to Compressor A | Other connector | > 10 (w/w) |
| C | S1 to Compressors | 10 | FL | north of valve D1 | Flange | > 10 (w/w) |
| C | S1 to Compressors | 11 | Pipe | north-south to Compressor B, 30"L | Other connector | > 10 (w/w) |
| C | S1 to Compressors | 12 | 90 | to Compressor B, down | Other connector | > 10 (w/w) |
| C | S1 to Compressors | 13 | Pipe | down to Compressor B | Other connector | > 10 (w/w) |
| C | S1 to Compressors | 14 | 90 | to Compressor B, connects to FL | Other connector | > 10 (w/w) |
| C | S1 to Compressors | 15 | FL | north of valve E1 | Flange | > 10 (w/w) |
| D | Compressor A | 1 | VALVE | In; Flanged | Valve in gas/vapor service | > 10 (w/w) |
| D | Compressor A | 2 | 90 | Flanged, down, south of valve D1 | Other connector | > 10 (w/w) |
| D | Compressor A | 3 | EX | In | Other connector | > 10 (w/w) |
| D | Compressor A | 4 | CV | In | Other connector | > 10 (w/w) |
| D | Compressor A | 5 | COMPRESSOR | A | Compressor | > 10 (w/w) |
| D | Compressor A | 6 | CV | Out | Other connector | > 10 (w/w) |
| D | Compressor A | 7 | EX | Out | Other connector | > 10 (w/w) |

US EPA ARCHIVE DOCUMENT

# VOC Recovery System

| VOC SYSTEM / RECTANGLE TAGS | | | | | | |
|---|---|---|---|---|---|---|
| Label | COMPONENT/Line | Sequence # | Pipe Type | Description/Note | Equip Type | Organics |
| D | Compressor A | 8 | Plug | South Side East | Other connector | > 10 (w/w) |
| D | Compressor A | 9 | Plug | South Side West | Other connector | > 10 (w/w) |
| D | Compressor A | 10 | Plug | North Side East | Other connector | > 10 (w/w) |
| D | Compressor A | 11 | Plug | North Side Middle | Other connector | > 10 (w/w) |
| D | Compressor A | 12 | Plug | North Side West | Other connector | > 10 (w/w) |
| D | Compressor A | 13 | Plug | Bottom East | Other connector | > 10 (w/w) |
| D | Compressor A | 14 | Plug | Bottom West | Other connector | > 10 (w/w) |
| D | Compressor A | 15 | FL | South of valve D1 | Flange | > 10 (w/w) |
| D | Compressor A | 16 | FL | Top of EX D3 | Flange | > 10 (w/w) |
| D | Compressor A | 17 | FL | Bottom EX D3 | Flange | > 10 (w/w) |
| D | Compressor A | 18 | FL | Bottom CV in D4 | Flange | > 10 (w/w) |
| D | Compressor A | 19 | FL | Bottom CV out D6 | Flange | > 10 (w/w) |
| D | Compressor A | 20 | FL | Bottom EX out D7 | Flange | > 10 (w/w) |
| D | Compressor A | 21 | FL | Top EX out D7 | Flange | > 10 (w/w) |
| E | Compressor B | 1 | VALVE | In; Flanged | Valve in gas/vapor service | > 10 (w/w) |
| E | Compressor B | 2 | 90 | Flanged, down, south of valve DE1 | Other connector | > 10 (w/w) |
| E | Compressor B | 3 | EX | In | Other connector | > 10 (w/w) |
| E | Compressor B | 4 | CV | In | Other connector | > 10 (w/w) |
| E | Compressor B | 5 | COMPRESSOR | B | Compressor | > 10 (w/w) |
| E | Compressor B | 6 | CV | Out | Other connector | > 10 (w/w) |
| E | Compressor B | 7 | EX | Out | Other connector | > 10 (w/w) |
| E | Compressor B | 8 | Plug | South Side East | Other connector | > 10 (w/w) |
| E | Compressor B | 9 | Plug | South Side West | Other connector | > 10 (w/w) |
| E | Compressor B | 10 | Plug | North Side East | Other connector | > 10 (w/w) |
| E | Compressor B | 11 | Plug | North Side Middle | Other connector | > 10 (w/w) |
| E | Compressor B | 12 | Plug | North Side West | Other connector | > 10 (w/w) |
| E | Compressor B | 13 | Plug | Bottom East | Other connector | > 10 (w/w) |
| E | Compressor B | 14 | Plug | Bottom West | Other connector | > 10 (w/w) |
| E | Compressor B | 15 | FL | South of valve DE1 | Flange | > 10 (w/w) |
| E | Compressor B | 16 | FL | Top of EX E3 | Flange | > 10 (w/w) |
| E | Compressor B | 17 | FL | Bottom EX E3 | Flange | > 10 (w/w) |
| E | Compressor B | 18 | FL | Bottom CV in E4 | Flange | > 10 (w/w) |
| E | Compressor B | 19 | FL | Bottom CV out E6 | Flange | > 10 (w/w) |
| E | Compressor B | 20 | FL | Bottom EX out E7 | Flange | > 10 (w/w) |

US EPA ARCHIVE DOCUMENT

# VOC Recovery System

| VOC SYSTEM / RECTANGLE TAGS | | | | | | |
|---|---|---|---|---|---|---|
| **Label** | **COMPONENT/Line** | **Sequence #** | **Pipe Type** | **Description/Note** | **Equip Type** | **Organics** |
| E | Compressor B | 21 | FL | Top EX out E7 | Flange | > 10 (w/w) |
| F | Compressors to S2 | 1 | Pipe | 2"OD, 25"L | Other connector | > 10 (w/w) |
| F | Compressors to S2 | 8 | 90 | from Compressor A outlet | Other connector | > 10 (w/w) |
| F | Compressors to S2 | 9 | Tee | from Compressor B outlet | Other connector | > 10 (w/w) |
| F | Compressors to S2 | 10 | Pipe | 2"OD, 10"L, from Tee to 45elbow | Other connector | > 10 (w/w) |
| F | Compressors to S2 | 11 | 45 | down | Other connector | > 10 (w/w) |
| F | Compressors to S2 | 12 | Pipe | 45 to 45, 1"L | Other connector | > 10 (w/w) |
| F | Compressors to S2 | 13 | 45 | South | Other connector | > 10 (w/w) |
| F | Compressors to S2 | 14 | Pipe | 2"OD inlet to S2 | Other connector | > 10 (w/w) |
| F | Compressors to S2 | 2 | Bushing | 1" x 1/2" for TG | Other connector | > 10 (w/w) |
| F | Compressors to S2 | 15 | Coupling | for TG | Other connector | > 10 (w/w) |
| F | Compressors to S2 | 3 | TG | Temperature Guage | Other connector | > 10 (w/w) |
| F | Compressors to S2 | 4 | NIP | 2" for PG | Other connector | > 10 (w/w) |
| F | Compressors to S2 | 5 | VALVE | for PG | Valve in gas/vapor service | > 10 (w/w) |
| F | Compressors to S2 | 16 | Coupling | for PG | Other connector | > 10 (w/w) |
| F | Compressors to S2 | 6 | PG | Pressure Guage | Other connector | > 10 (w/w) |
| F | Compressors to S2 | 7 | FL | S2 Side Inlet | Flange | > 10 (w/w) |
| G | Makeup Water Line to S2 | 1 | Check Valve | Needs to added before Air Valve # 13 | | |
| G | Makeup Water Line to S2 | 2 | NIP | 6"L west of valve G3 | Other connector | |
| G | Makeup Water Line to S2 | 3 | Air Valve | | Valve | |
| G | Makeup Water Line to S3 | 17 | FL | west of valve G3 | Flange | |
| G | Makeup Water Line to S2 | 4 | NIP | 6"L east of valve G3 | Other connector | |
| G | Makeup Water Line to S2 | 5 | FL | threaded | Flange | |
| G | Makeup Water Line to S2 | 6 | TP | FL to 8" TP | Other connector | |
| G | Makeup Water Line to S2 | 7 | 90 | up | Other connector | |
| G | Makeup Water Line to S3 | 16 | Pipe | 8"L between 90 G7 and FL G5 | Other connector | |
| G | Makeup Water Line to S2 | 8 | TP | 8" | Other connector | |
| G | Makeup Water Line to S2 | 9 | 90 | south | Other connector | |
| G | Makeup Water Line to S2 | 10 | NIP | 3" | Other connector | |
| G | Makeup Water Line to S2 | 11 | Tee | | Other connector | |
| G | Makeup Water Line to S2 | 12 | NIP | 3"L south from Tee # 11 | Other connector | |
| G | Makeup Water Line to S2 | 13 | Coupling | Inlet into north side of S2 | Other connector | |
| G | Makeup Water Line to S2 | 14 | NIP | 3" east from Tee # 11 | Other connector | |

US EPA ARCHIVE DOCUMENT

# VOC Recovery System

| VOC SYSTEM / RECTANGLE TAGS | | | | | | |
|---|---|---|---|---|---|---|
| **Label** | **COMPONENT/Line** | **Sequence #** | **Pipe Type** | **Description/Note** | **Equip Type** | **Organics** |
| G | Makeup Water Line to S2 | 15 | VALVE | # 28 | Valve | |
| H | S2 | 1 | Coupling | Top Outlet for PRV | Other connector | > 10 (w/w) |
| H | S2 | 2 | PRV | # 2 | Pressure relief devices | > 10 (w/w) |
| H | S2 | 3 | Coupling | Outlet for PT from south side of outlet to Refrigerated Condensers | Other connector | > 10 (w/w) |
| H | S2 | 4 | Compression Fitting | | Other connector | > 10 (w/w) |
| H | S2 | 5 | Pipe | 1/4" SS Line | Other connector | > 10 (w/w) |
| H | S2 | 6 | PT | Pressure Transmitter | Other connector | |
| H | S2 | 7 | FL | Top of Level Transmitter | Flange | > 10 (w/w) |
| H | S2 | 8 | Coupling | Outlet for top of Level Transmitter | Other connector | > 10 (w/w) |
| H | S2 | 27 | NIP | Top of Level Transmitter | Other connector | > 10 (w/w) |
| H | S2 | 28 | Coupling | Outlet for bottom of Level Transmitter | Other connector | > 10 (w/w) |
| H | S2 | 9 | NIP | 3" | Other connector | > 10 (w/w) |
| H | S2 | 10 | 90 | down | Other connector | > 10 (w/w) |
| H | S2 | 11 | NIP | 3" | Other connector | > 10 (w/w) |
| H | S2 | 12 | UNION | | Other connector | > 10 (w/w) |
| H | S2 | 13 | NIP | 5" | Other connector | > 10 (w/w) |
| H | S2 | 14 | LT | Bottom of Level Transmitter | Other connector | > 10 (w/w) |
| H | S2 | 15 | Coupling | for PG, north side S2 | Other connector | > 10 (w/w) |
| H | S2 | 16 | Bushing | north side S2, 3/4" x 1/4" | Other connector | > 10 (w/w) |
| H | S2 | 17 | NIP | north side S2, 1" | Other connector | > 10 (w/w) |
| H | S2 | 18 | 90 | north side S2,up | Other connector | > 10 (w/w) |
| H | S2 | 19 | NIP | north side S2 | Other connector | > 10 (w/w) |
| H | S2 | 20 | VALVE | north side S2 | Valve in gas/vapor service | > 10 (w/w) |
| H | S2 | 21 | PG | north side S2 | Other connector | > 10 (w/w) |
| H | S2 | 22 | VALVE | Top of SG | Valve in light liquid service | > 10 (w/w) |
| H | S2 | 23 | VALVE | Bottom of SG | Valve in light liquid service | > 10 (w/w) |
| H | S2 | 24 | Plug | Bottom of Bottom Valve of SG | Other connector | > 10 (w/w) |
| H | S2 | 25 | Coupling | Refrigerant In | Other connector | |

US EPA ARCHIVE DOCUMENT

# VOC Recovery System

| VOC SYSTEM / RECTANGLE TAGS | | | | | | |
|---|---|---|---|---|---|---|
| Label | COMPONENT/Line | Sequence # | Pipe Type | Description/Note | Equip Type | Organics |
| H | S2 | 26 | Coupling | Refrigerant Out | Other connector | |
| I | S2 to S1 | 1 | FL | Outlet from top of S2 | Flange | > 10 (w/w) |
| I | S2 to S1 | 2 | FL | South of valve I3 | Flange | > 10 (w/w) |
| I | S2 to S1 | 3 | VALVE | | Valve in gas/vapor service | > 10 (w/w) |
| I | S2 to S1 | 4 | FL | South of valve I5 | Flange | > 10 (w/w) |
| I | S2 to S1 | 5 | VALVE | Control Valve | Valve in gas/vapor service | > 10 (w/w) |
| I | S2 to S1 | 6 | FL | FL, North of valve I5 | Flange | > 10 (w/w) |
| I | S2 to S1 | 7 | FL | FL, North of FL north of valve I5 | Flange | > 10 (w/w) |
| I | S2 to S1 | 8 | FL | Inlet into top of S1, southeast side | Flange | > 10 (w/w) |
| I | S2 to S1 | 9 | Pipe | 2"OD from top of S2 | Other connector | > 10 (w/w) |
| I | S2 to S1 | 10 | 90 | top of S2 | Other connector | > 10 (w/w) |
| I | S2 to S1 | 11 | Pipe | 2"OD, 40"L | Other connector | > 10 (w/w) |
| I | S2 to S1 | 12 | FL | North of valve I3 | Flange | > 10 (w/w) |
| I | S2 to S1 | 13 | Pipe | 2"OD, 3"L north of I12 | Other connector | > 10 (w/w) |
| I | S2 to S1 | 14 | reducer | 2" to 1"OD | Other connector | > 10 (w/w) |
| I | S2 to S1 | 15 | reducer | 1" to 2"OD, North of valve I5 | Other connector | > 10 (w/w) |
| I | S2 to S1 | 16 | Pipe | North-south | Other connector | > 10 (w/w) |
| I | S2 to S1 | 17 | 90 | west | Other connector | > 10 (w/w) |
| I | S2 to S1 | 18 | Pipe | accress | Other connector | > 10 (w/w) |
| I | S2 to S1 | 19 | 90 | down | Other connector | > 10 (w/w) |
| I | S2 to S1 | 20 | Pipe | down | Other connector | > 10 (w/w) |
| I | S2 to S1 | 21 | Pipe | 2"OD to S1 | Other connector | > 10 (w/w) |
| J | S2 to S3 | 1 | FL | Outlet from side of S2 | Flange | > 10 (w/w) |
| J | S2 to S3 | 2 | Pipe | pipe, 18"L | Other connector | > 10 (w/w) |
| J | S2 to S3 | 3 | FL | Inlet into side of S3 | Flange | > 10 (w/w) |
| J | S2 to S3 | 4 | Pipe | 2"OD pipe from S2 | Other connector | > 10 (w/w) |
| J | S2 to S3 | 5 | Pipe | 2"OD pipe from S3 | Other connector | > 10 (w/w) |
| K | S3 | 1 | FL | Top of Level Transmitter | Flange | > 10 (w/w) |
| K | S3 | 2 | Coupling | Outlet for top of Level Transmitter | Other connector | > 10 (w/w) |
| K | S3 | 18 | NIP | Top of Level Transmitter | Other connector | > 10 (w/w) |
| K | S3 | 19 | Coupling | Bottom of Level Transmitter | Other connector | > 10 (w/w) |
| K | S3 | 3 | NIP | Bottom of Level Transmitter, 1/2" | Other connector | > 10 (w/w) |
| K | S3 | 4 | 90 | Bottom of Level Transmitter, SE | Other connector | > 10 (w/w) |
| K | S3 | 5 | NIP | Bottom of Level Transmitter, 3" | Other connector | > 10 (w/w) |

US EPA ARCHIVE DOCUMENT

# VOC Recovery System

| VOC SYSTEM / RECTANGLE TAGS | | | | | | |
|---|---|---|---|---|---|---|
| **Label** | **COMPONENT/Line** | **Sequence #** | **Pipe Type** | **Description/Note** | **Equip Type** | **Organics** |
| K | S3 | 6 | 90 | Bottom of Level Transmitter, down | Other connector | > 10 (w/w) |
| K | S3 | 7 | NIP | Bottom of Level Transmitter, 3" | Other connector | > 10 (w/w) |
| K | S3 | 8 | UNION | Bottom of Level Transmitter | Other connector | > 10 (w/w) |
| K | S3 | 9 | NIP | Bottom of Level Transmitter, 6" | Other connector | > 10 (w/w) |
| K | S3 | 10 | LT | Bottom of Level Transmitter | Other connector | > 10 (w/w) |
| K | S3 | 11 | VALVE | Top of SG | Valve in light liquid service | > 10 (w/w) |
| K | S3 | 12 | VALVE | Bottom of SG | Valve in light liquid service | > 10 (w/w) |
| K | S3 | 13 | Plug | Bottom of Bottom Valve of SG | Other connector | > 10 (w/w) |
| K | S3 | 20 | Coupling | Top of SG | Other connector | > 10 (w/w) |
| K | S3 | 21 | Coupling | Bottom of SG | Other connector | > 10 (w/w) |
| K | S3 | 22 | SG | Sight glass | Other connector | > 10 (w/w) |
| K | S3 | 14 | Coupling | 1/2" on Bottom West Side for Drain Valve | Other connector | > 10 (w/w) |
| K | S3 | 15 | NIP | 1" | Other connector | > 10 (w/w) |
| K | S3 | 16 | VALVE | Drain | Valve in light liquid service | > 10 (w/w) |
| K | S3 | 17 | Plug | | Other connector | > 10 (w/w) |
| L | S2 to Filter | 1 | FL | Outlet | Flange | > 10 (w/w) |
| L | S2 to Filter | 2 | Pipe | 90 down, reducer 2" x 1 1/2", 90 west, pipe, 90 south, pipe, 90 west, pipe, 90 up, pipe | Other connector | > 10 (w/w) |
| L | S2 to Filter | 3 | VALVE | | Valve in light liquid service | > 10 (w/w) |
| L | S2 to Filter | 4 | Pipe | Reducer, 1 1/2" x 2", 90 north | Other connector | > 10 (w/w) |
| L | S2 to Filter | 5 | FL | Filter Inlet | Other connector | > 10 (w/w) |
| L | S2 to Filter | 6 | NIP | For PG before filter | Other connector | > 10 (w/w) |
| L | S2 to Filter | 7 | Tee | For PG before filter | Other connector | > 10 (w/w) |
| L | S2 to Filter | 8 | NIP | For PG before filter, south from Tee (# 7) | Other connector | > 10 (w/w) |
| L | S2 to Filter | 9 | VALVE | For PG before filter | Valve in light liquid service | > 10 (w/w) |
| L | S2 to Filter | 10 | Plug | For PG before filter | Other connector | > 10 (w/w) |
| L | S2 to Filter | 11 | NIP | For PG before filter, up from Tee (# 7) | Other connector | > 10 (w/w) |
| L | S2 to Filter | 12 | VALVE | For PG before filter | Valve in light liquid service | > 10 (w/w) |
| L | S2 to Filter | 13 | PG | Pressure Guage | Other connector | > 10 (w/w) |
| L | S2 to Filter | 14 | Pipe | 2"OD North S2 | Other connector | > 10 (w/w) |
| L | S2 to Filter | 15 | FL | side close to S2 | Flange | > 10 (w/w) |
| L | S2 to Filter | 16 | FL | side close to filter | Flange | > 10 (w/w) |
| AE | Filter | 1 | Plug | In Top Flange Cover | Other connector | > 10 (w/w) |
| AE | Filter | 2 | FL | Top Cover | Flange | > 10 (w/w) |

US EPA ARCHIVE DOCUMENT

# VOC Recovery System

| VOC SYSTEM / RECTANGLE TAGS | | | | | | |
|---|---|---|---|---|---|---|
| Label | COMPONENT/Line | Sequence # | Pipe Type | Description/Note | Equip Type | Organics |
| AE | Filter | 3 | Coupling | 2" Bottom Outlet | Other connector | > 10 (w/w) |
| AE | Filter | 4 | Bushing | 2" x 1/2" | Other connector | > 10 (w/w) |
| AE | Filter | 5 | NIP | 1/2" | Other connector | > 10 (w/w) |
| AE | Filter | 6 | 90 | SW | Other connector | > 10 (w/w) |
| AE | Filter | 7 | NIP | 1/2" | Other connector | > 10 (w/w) |
| AE | Filter | 8 | VALVE | # 23 | Valve in light liquid service | > 10 (w/w) |
| AE | Filter | 9 | Plug | | Other connector | > 10 (w/w) |
| M | Filter to Condenser | 1 | FL | Outlet | Flange | > 10 (w/w) |
| M | Filter to Condenser | 18 | Pipe | 2" pipe north from filter | Other connector | > 10 (w/w) |
| M | Filter to Condenser | 2 | Pipe | Reducer 2" x 1 1/2" | Other connector | > 10 (w/w) |
| M | Filter to Condenser | 3 | VALVE | | Valve in light liquid service | > 10 (w/w) |
| M | Filter to Condenser | 19 | FL | FL, north valve M3 | Flange | > 10 (w/w) |
| M | Filter to Condenser | 20 | FL | FL, south valve M3 | Flange | > 10 (w/w) |
| M | Filter to Condenser | 4 | Pipe | Pipe with couplings for PG and TG | Other connector | > 10 (w/w) |
| M | Filter to Condenser | 5 | NIP | for PG | Other connector | > 10 (w/w) |
| M | Filter to Condenser | 21 | Coupling | for PG | Other connector | > 10 (w/w) |
| M | Filter to Condenser | 6 | VALVE | for PG | Valve in light liquid service | > 10 (w/w) |
| M | Filter to Condenser | 7 | PG | Pressure Guage | Other connector | > 10 (w/w) |
| M | Filter to Condenser | 8 | Bushing | 1" x 1/2" for TG | Other connector | > 10 (w/w) |
| M | Filter to Condenser | 22 | Coupling | for TG | Other connector | > 10 (w/w) |
| M | Filter to Condenser | 9 | TG | Temperautre Guage | Other connector | > 10 (w/w) |
| M | Filter to Condenser | 10 | FL | Threaded, 1 1/4" | Flange | > 10 (w/w) |
| M | Filter to Condenser | 11 | NIP | 2" | Other connector | > 10 (w/w) |
| M | Filter to Condenser | 12 | 90 | down | Other connector | > 10 (w/w) |
| M | Filter to Condenser | 13 | NIP | | Other connector | > 10 (w/w) |
| M | Filter to Condenser | 14 | Coupling | | Other connector | > 10 (w/w) |
| M | Filter to Condenser | 15 | NIP | | Other connector | > 10 (w/w) |
| M | Filter to Condenser | 16 | 90 | north | Other connector | > 10 (w/w) |
| M | Filter to Condenser | 17 | TP | threaded inlet on bottom side of condenser | Other connector | > 10 (w/w) |
| N | Condenser to Chilled Condenser | 1 | TP | threaded outlet | Other connector | > 10 (w/w) |
| N | Condenser to Chilled Condenser | 2 | 90 | down | Other connector | > 10 (w/w) |
| N | Condenser to Chilled Condenser | 3 | Multi | TP, pipe with couplings for PG and TG, FL | Other connector | > 10 (w/w) |

US EPA ARCHIVE DOCUMENT

# VOC Recovery System

| VOC SYSTEM / RECTANGLE TAGS | | | | | | |
|---|---|---|---|---|---|---|
| **Label** | **COMPONENT/Line** | **Sequence #** | **Pipe Type** | **Description/Note** | **Equip Type** | **Organics** |
| N | Condenser to Chilled Condenser | 4 | NIP | 3" for PG | Other connector | > 10 (w/w) |
| N | Condenser to Chilled Condenser | 5 | VALVE | | Valve in light liquid service | > 10 (w/w) |
| N | Condenser to Chilled Condenser | 6 | PG | | Other connector | > 10 (w/w) |
| N | Condenser to Chilled Condenser | 7 | Bushing | 1" x 1/2" for TG | Other connector | > 10 (w/w) |
| N | Condenser to Chilled Condenser | 8 | TG | | Other connector | > 10 (w/w) |
| N | Condenser to Chilled Condenser | 9 | FL | threaded | Flange | > 10 (w/w) |
| N | Condenser to Chilled Condenser | 10 | NIP | 1" | Other connector | > 10 (w/w) |
| N | Condenser to Chilled Condenser | 11 | 90 | north | Other connector | > 10 (w/w) |
| N | Condenser to Chilled Condenser | 12 | TP | inlet on bottom of chilled condenser | Other connector | > 10 (w/w) |
| O | Chilled Condenser to Compressors | 1 | TP | 1/2" threaded top outlet up | Other connector | > 10 (w/w) |
| O | Chilled Condenser to Compressors | 2 | 90 | | Other connector | > 10 (w/w) |
| O | Chilled Condenser to Compressors | 3 | UNION | | Other connector | > 10 (w/w) |
| O | Chilled Condenser to Compressors | 4 | Pipe | | Other connector | > 10 (w/w) |
| O | Chilled Condenser to Compressors | 5 | 90 | | Other connector | > 10 (w/w) |
| O | Chilled Condenser to Compressors | 6 | Tee | | Other connector | > 10 (w/w) |
| O | Chilled Condenser to Compressors | 7 | Plug | | Other connector | > 10 (w/w) |
| O | Chilled Condenser to Compressors | 8 | Pipe | | Other connector | > 10 (w/w) |
| O | Chilled Condenser to Compressors | 9 | 90 | | Other connector | > 10 (w/w) |
| O | Chilled Condenser to Compressors | 85 | Tee | From Chiller to Tee C10 | Other connector | > 10 (w/w) |

US EPA ARCHIVE DOCUMENT

# VOC Recovery System

| VOC SYSTEM / RECTANGLE TAGS | | | | | | |
|---|---|---|---|---|---|---|
| **Label** | **COMPONENT/Line** | **Sequence #** | **Pipe Type** | **Description/Note** | **Equip Type** | **Organics** |
| O | Chilled Condenser to Compressors | 86 | NIP | From Chiller to Tee C10 | Other connector | > 10 (w/w) |
| O | Chilled Condenser to Compressors | 87 | UNION | From Chiller to Tee C10 | Other connector | > 10 (w/w) |
| O | Chilled Condenser to Compressors | 88 | NIP | From Chiller to Tee C10 | Other connector | > 10 (w/w) |
| O | Chilled Condenser to Compressors | 89 | VALVE | From Chiller to Tee C10 | Valve in light liquid service | > 10 (w/w) |
| O | Chilled Condenser to Compressors | 90 | NIP | From Chiller to Tee C10 | Other connector | > 10 (w/w) |
| O | Chilled Condenser to Compressors | 10 | Tee | to Compressors A & B | Other connector | > 10 (w/w) |
| O | Chilled Condenser to Compressors | 11 | NIP | 1" north from side of Tee (# 10) | Other connector | > 10 (w/w) |
| O | Chilled Condenser to Compressors | 12 | UNION | | Other connector | > 10 (w/w) |
| O | Chilled Condenser to Compressors | 13 | NIP | 1" | Other connector | > 10 (w/w) |
| O | Chilled Condenser to Compressors | 14 | 90 | east | Other connector | > 10 (w/w) |
| O | Chilled Condenser to Compressors | 15 | NIP | | Other connector | > 10 (w/w) |
| O | Chilled Condenser to Compressors | 16 | VALVE | | Valve in light liquid service | > 10 (w/w) |
| O | Chilled Condenser to Compressors | 17 | NIP | 5" | Other connector | > 10 (w/w) |
| O | Chilled Condenser to Compressors | 18 | Tee | for makeup water into side from the north (Note: | Other connector | > 10 (w/w) |
| O | Chilled Condenser to Compressors | 19 | NIP | 3" east from Tee (# 18) | Other connector | > 10 (w/w) |
| O | Chilled Condenser to Compressors | 20 | FM | Flow Meter | Other connector | > 10 (w/w) |
| O | Chilled Condenser to Compressors | 21 | NIP | | Other connector | > 10 (w/w) |
| O | Chilled Condenser to Compressors | 22 | Bushing | 1/2" x 1 1/2" | Other connector | > 10 (w/w) |
| O | Chilled Condenser to Compressors | 23 | Tee | for Flow Sensor into top side inlet | Other connector | > 10 (w/w) |

US EPA ARCHIVE DOCUMENT

# VOC Recovery System

| VOC SYSTEM / RECTANGLE TAGS | | | | | | |
|---|---|---|---|---|---|---|
| Label | COMPONENT/Line | Sequence # | Pipe Type | Description/Note | Equip Type | Organics |
| O | Chilled Condenser to Compressors | 24 | Bushing | 1 1/2" x 1/2" east from Tee (# 23) | Other connector | > 10 (w/w) |
| O | Chilled Condenser to Compressors | 25 | NIP | 3" | Other connector | > 10 (w/w) |
| O | Chilled Condenser to Compressors | 26 | UNION | | Other connector | > 10 (w/w) |
| O | Chilled Condenser to Compressors | 27 | NIP | 1" | Other connector | > 10 (w/w) |
| O | Chilled Condenser to Compressors | 28 | AV | Air Valve # 59 | Valve in light liquid service | > 10 (w/w) |
| O | Chilled Condenser to Compressors | 29 | NIP | 1" | Other connector | > 10 (w/w) |
| O | Chilled Condenser to Compressors | 30 | UNION | | Other connector | > 10 (w/w) |
| O | Chilled Condenser to Compressors | 31 | NIP | 3" | Other connector | > 10 (w/w) |
| O | Chilled Condenser to Compressors | 32 | Tee | for PG | Other connector | > 10 (w/w) |
| O | Chilled Condenser to Compressors | 33 | Bushing | 1/2" x 1/4" into top side of Tee (# 32) for PG | Other connector | > 10 (w/w) |
| O | Chilled Condenser to Compressors | 34 | NIP | 1" | Other connector | > 10 (w/w) |
| O | Chilled Condenser to Compressors | 35 | VALVE | | Valve in light liquid service | > 10 (w/w) |
| O | Chilled Condenser to Compressors | 36 | PG | | Other connector | > 10 (w/w) |
| O | Chilled Condenser to Compressors | 37 | NIP | 3" east from Tee (# 32) | Other connector | > 10 (w/w) |
| O | Chilled Condenser to Compressors | 38 | 90 | south | Other connector | > 10 (w/w) |
| O | Chilled Condenser to Compressors | 39 | NIP | 5" into Compressor A | Other connector | > 10 (w/w) |
| O | Chilled Condenser to Compressors | 40 | NIP | From Tee C10 to Tee C49, 1" east | Other connector | > 10 (w/w) |
| O | Chilled Condenser to Compressors | 41 | VALVE | From Tee C10 to Tee C49 | Valve in light liquid service | > 10 (w/w) |
| O | Chilled Condenser to Compressors | 42 | NIP | From Tee C10 to Tee C49, 1" | Other connector | > 10 (w/w) |

US EPA ARCHIVE DOCUMENT

# VOC Recovery System

| VOC SYSTEM / RECTANGLE TAGS | | | | | | |
|---|---|---|---|---|---|---|
| **Label** | **COMPONENT/Line** | **Sequence #** | **Pipe Type** | **Description/Note** | **Equip Type** | **Organics** |
| O | Chilled Condenser to Compressors | 43 | 90 | From Tee C10 to Tee C49, north | Other connector | > 10 (w/w) |
| O | Chilled Condenser to Compressors | 44 | NIP | From Tee C10 to Tee C49, 1" | Other connector | > 10 (w/w) |
| O | Chilled Condenser to Compressors | 45 | 90 | From Tee C10 to Tee C49, down | Other connector | > 10 (w/w) |
| O | Chilled Condenser to Compressors | 46 | NIP | From Tee C10 to Tee C49, 1" | Other connector | > 10 (w/w) |
| O | Chilled Condenser to Compressors | 47 | UNION | From Tee C10 to Tee C49, | Other connector | > 10 (w/w) |
| O | Chilled Condenser to Compressors | 48 | NIP | From Tee C10 to Tee C49, 1" | Other connector | > 10 (w/w) |
| O | Chilled Condenser to Compressors | 49 | Tee | for makeup water into east end (Note: need check valve) | Other connector | > 10 (w/w) |
| O | Chilled Condenser to Compressors | 50 | NIP | 1" from west end of Tee (# 49) | Other connector | > 10 (w/w) |
| O | Chilled Condenser to Compressors | 51 | 90 | down | Other connector | > 10 (w/w) |
| O | Chilled Condenser to Compressors | 52 | NIP | 2" | Other connector | > 10 (w/w) |
| O | Chilled Condenser to Compressors | 53 | 90 | south | Other connector | > 10 (w/w) |
| O | Chilled Condenser to Compressors | 54 | NIP | 3" | Other connector | > 10 (w/w) |
| O | Chilled Condenser to Compressors | 55 | UNION | | Other connector | > 10 (w/w) |
| O | Chilled Condenser to Compressors | 56 | NIP | | Other connector | > 10 (w/w) |
| O | Chilled Condenser to Compressors | 57 | Bushing | 1/2" x 1 1/2" | Other connector | > 10 (w/w) |
| O | Chilled Condenser to Compressors | 58 | Tee | for Flow Sensor into top side inlet | Other connector | > 10 (w/w) |
| O | Chilled Condenser to Compressors | 59 | Bushing | 1 1/2" x 1/2" east from Tee (# 58) | Other connector | > 10 (w/w) |
| O | Chilled Condenser to Compressors | 60 | NIP | 3" | Other connector | > 10 (w/w) |
| O | Chilled Condenser to Compressors | 61 | UNION | | Other connector | > 10 (w/w) |

US EPA ARCHIVE DOCUMENT

# VOC Recovery System

| VOC SYSTEM / RECTANGLE TAGS | | | | | | |
|---|---|---|---|---|---|---|
| Label | COMPONENT/Line | Sequence # | Pipe Type | Description/Note | Equip Type | Organics |
| O | Chilled Condenser to Compressors | 62 | NIP | 1" | Other connector | > 10 (w/w) |
| O | Chilled Condenser to Compressors | 63 | AV | Air Valve # 58 | Valve in light liquid service | > 10 (w/w) |
| O | Chilled Condenser to Compressors | 64 | NIP | 5" | Other connector | > 10 (w/w) |
| O | Chilled Condenser to Compressors | 65 | UNION | | Other connector | > 10 (w/w) |
| O | Chilled Condenser to Compressors | 66 | NIP | 2" | Other connector | > 10 (w/w) |
| O | Chilled Condenser to Compressors | 67 | 90 | up | Other connector | > 10 (w/w) |
| O | Chilled Condenser to Compressors | 68 | NIP | 3" | Other connector | > 10 (w/w) |
| O | Chilled Condenser to Compressors | 69 | VALVE | | Valve in light liquid service | > 10 (w/w) |
| O | Chilled Condenser to Compressors | 70 | NIP | 2" | Other connector | > 10 (w/w) |
| O | Chilled Condenser to Compressors | 71 | 90 | east | Other connector | > 10 (w/w) |
| O | Chilled Condenser to Compressors | 72 | TP | 12" | Other connector | > 10 (w/w) |
| O | Chilled Condenser to Compressors | 73 | FM | Flow Meter | Other connector | > 10 (w/w) |
| O | Chilled Condenser to Compressors | 74 | TP | 12" | Other connector | > 10 (w/w) |
| O | Chilled Condenser to Compressors | 75 | Tee | for PG | Other connector | > 10 (w/w) |
| O | Chilled Condenser to Compressors | 76 | Bushing | 1/2" x 1/4" into top side of Tee (# 75) for PG | Other connector | > 10 (w/w) |
| O | Chilled Condenser to Compressors | 77 | NIP | 1" | Other connector | > 10 (w/w) |
| O | Chilled Condenser to Compressors | 78 | VALVE | | Valve in light liquid service | > 10 (w/w) |
| O | Chilled Condenser to Compressors | 79 | PG | | Other connector | > 10 (w/w) |
| O | Chilled Condenser to Compressors | 80 | NIP | 5" east from Tee (# 75) | Other connector | > 10 (w/w) |

US EPA ARCHIVE DOCUMENT

# VOC Recovery System

| VOC SYSTEM / RECTANGLE TAGS | | | | | | |
|---|---|---|---|---|---|---|
| Label | COMPONENT/Line | Sequence # | Pipe Type | Description/Note | Equip Type | Organics |
| O | Chilled Condenser to Compressors | 81 | UNION | | Other connector | > 10 (w/w) |
| O | Chilled Condenser to Compressors | 82 | NIP | 5" | Other connector | > 10 (w/w) |
| O | Chilled Condenser to Compressors | 83 | 90 | south | Other connector | > 10 (w/w) |
| O | Chilled Condenser to Compressors | 84 | NIP | 3" into Compressor B | Other connector | > 10 (w/w) |
| O | Chilled Condenser to Compressors | 91 | SWITCH | Flow switch 1 | Other connector | > 10 (w/w) |
| O | Chilled Condenser to Compressors | 92 | SWITCH | Flow switch 2 | Other connector | > 10 (w/w) |
| O | Chilled Condenser to Compressors | 93 | Pipe | From air valve O63 to Compressor B | Other connector | > 10 (w/w) |
| O | Chilled Condenser to Compressors | 94 | Pipe | From air valve O63 to Compressor B | Other connector | > 10 (w/w) |
| P | S2 & S3 to Refrigerated CON 1 & 2 | 1 | FL | 2" Outlet from Top of S2 | Flange | > 10 (w/w) |
| P | S2 & S3 to Refrigerated CON 1 & 2 | 2 | FL | 1" Outlet from Top of S3 | Flange | > 10 (w/w) |
| P | S2 & S3 to Refrigerated CON 1 & 2 | 3 | 90 | | Other connector | > 10 (w/w) |
| P | S2 & S3 to Refrigerated CON 1 & 2 | 4 | VALVE | Manual into CON 1 | Valve in gas/vapor service | > 10 (w/w) |
| P | S2 & S3 to Refrigerated CON 1 & 2 | 5 | VALVE | Air Valve # 40 into CON 1 | Valve in gas/vapor service | > 10 (w/w) |
| P | S2 & S3 to Refrigerated CON 1 & 2 | 6 | 90 | East | Other connector | > 10 (w/w) |
| P | S2 & S3 to Refrigerated CON 1 & 2 | 7 | FL | CON 1 inlet | Flange | > 10 (w/w) |
| P | S2 & S3 to Refrigerated CON 1 & 2 | 8 | VALVE | Manual into CON 2 | Valve in gas/vapor service | > 10 (w/w) |
| P | S2 & S3 to Refrigerated CON 1 & 2 | 9 | VALVE | Air Valve # 34 into CON 2 | Valve in gas/vapor service | > 10 (w/w) |
| P | S2 & S3 to Refrigerated CON 1 & 2 | 10 | Multi | FL, 90 east, FL | Other connector | > 10 (w/w) |
| P | S2 & S3 to Refrigerated CON 1 & 2 | 11 | FL | CON 2 inlet | Flange | > 10 (w/w) |

US EPA ARCHIVE DOCUMENT

# VOC Recovery System

| VOC SYSTEM / RECTANGLE TAGS | | | | | | |
|---|---|---|---|---|---|---|
| **Label** | **COMPONENT/Line** | **Sequence #** | **Pipe Type** | **Description/Note** | **Equip Type** | **Organics** |
| P | S2 & S3 to Refrigerated CON 1 & 3 | 12 | Pipe | 2" pipe out of top of S2 | Other connector | > 10 (w/w) |
| P | S2 & S3 to Refrigerated CON 1 & 4 | 13 | Pipe | 1" pipe out of top of S3 | Other connector | > 10 (w/w) |
| P | S2 & S3 to Refrigerated CON 1 & 5 | 14 | Pipe | S3 to Condenser | Other connector | > 10 (w/w) |
| P | S2 & S3 to Refrigerated CON 1 & 6 | 15 | 90 | S3 to Condenser | Other connector | > 10 (w/w) |
| P | S2 & S3 to Refrigerated CON 1 & 7 | 16 | Pipe | S3 to Condenser | Other connector | > 10 (w/w) |
| P | S2 & S3 to Refrigerated CON 1 & 8 | 17 | 90 | S3 to Condenser | Other connector | > 10 (w/w) |
| P | S2 & S3 to Refrigerated CON 1 & 9 | 18 | Reducer | S3 to Condenser | Other connector | > 10 (w/w) |
| P | S2 & S3 to Refrigerated CON 1 & 10 | 19 | Tee | | Other connector | > 10 (w/w) |
| P | S2 & S3 to Refrigerated CON 1 & 11 | 20 | 90 | S1 to Tee P18 | Other connector | > 10 (w/w) |
| P | S2 & S3 to Refrigerated CON 1 & 12 | 21 | Pipe | S1 to Tee P19, 36"L | Other connector | > 10 (w/w) |
| P | S2 & S3 to Refrigerated CON 1 & 13 | 22 | Pipe | | Other connector | > 10 (w/w) |
| P | S2 & S3 to Refrigerated CON 1 & 14 | 23 | 90 | | Other connector | > 10 (w/w) |
| P | S2 & S3 to Refrigerated CON 1 & 15 | 24 | Pipe | | Other connector | > 10 (w/w) |
| P | S2 & S3 to Refrigerated CON 1 & 16 | 25 | Tee | | Other connector | > 10 (w/w) |
| P | S2 & S3 to Refrigerated CON 1 & 17 | 26 | Pipe | | Other connector | > 10 (w/w) |
| P | S2 & S3 to Refrigerated CON 1 & 18 | 27 | 90 | | Other connector | > 10 (w/w) |
| P | S2 & S3 to Refrigerated CON 1 & 19 | 28 | FL | CON 1 Valve to input, top manual valve | Flange | > 10 (w/w) |
| P | S2 & S3 to Refrigerated CON 1 & 20 | 29 | FL | CON 1 Valve to input, bottom manual valve | Flange | > 10 (w/w) |
| P | S2 & S3 to Refrigerated CON 1 & 21 | 30 | FL | CON 1 Valve to input, air valve | Flange | > 10 (w/w) |

US EPA ARCHIVE DOCUMENT

# VOC Recovery System

| VOC SYSTEM / RECTANGLE TAGS | | | | | | |
|---|---|---|---|---|---|---|
| **Label** | **COMPONENT/Line** | **Sequence #** | **Pipe Type** | **Description/Note** | **Equip Type** | **Organics** |
| P | S2 & S3 to Refrigerated CON 1 & 22 | 31 | FL | CON 1 Valve to input, bottom of FL from air valve | Flange | > 10 (w/w) |
| P | S2 & S3 to Refrigerated CON 1 & 23 | 32 | FL | CON 2 Valve to input, top manual valve | Flange | > 10 (w/w) |
| P | S2 & S3 to Refrigerated CON 1 & 24 | 33 | FL | CON 2 Valve to input, bottom manual valve | Flange | > 10 (w/w) |
| P | S2 & S3 to Refrigerated CON 1 & 25 | 34 | FL | CON 2 Valve to input, air valve | Flange | > 10 (w/w) |
| P | S2 & S3 to Refrigerated CON 1 & 26 | 35 | FL | CON 2 Valve to input, bottom of FL from air valve | Flange | > 10 (w/w) |
| AF | CON1 | 1 | Coupling | Top Center Outlet for PRV | Other connector | > 10 (w/w) |
| AF | CON1 | 2 | PRV | | Pressure relief devices | > 10 (w/w) |
| AF | CON1 | 3 | Coupling | Top of Exit Cone for TT | Other connector | > 10 (w/w) |
| AF | CON1 | 4 | TT | | Other connector | > 10 (w/w) |
| AF | CON1 | 5 | SG | NW Inlet Cone | Other connector | > 10 (w/w) |
| AF | CON1 | 6 | Coupling | Refrigerant | Other connector | > 10 (w/w) |
| AF | CON1 | 7 | Coupling | Refrigerant | Other connector | > 10 (w/w) |
| AF | CON1 | 8 | Coupling | Refrigerant | Other connector | > 10 (w/w) |
| AG | CON2 | 1 | Coupling | Top Center Outlet for PRV | Other connector | > 10 (w/w) |
| AG | CON2 | 2 | PRV | | Pressure relief devices | > 10 (w/w) |
| AG | CON2 | 3 | Coupling | Top of Exit Cone for TT | Other connector | > 10 (w/w) |
| AG | CON2 | 4 | TT | | Other connector | > 10 (w/w) |
| AG | CON2 | 5 | SG | NW Inlet Cone | Other connector | > 10 (w/w) |
| AG | CON2 | 6 | Coupling | Refrigerant | Other connector | > 10 (w/w) |
| AG | CON2 | 7 | Coupling | Refrigerant | Other connector | > 10 (w/w) |
| AG | CON2 | 8 | Coupling | Refrigerant | Other connector | > 10 (w/w) |
| Q | Refrigerated CON 1 & 2 Out | 1 | FL | Outlet from east end of CON2 | Flange | > 10 (w/w) |
| Q | Refrigerated CON 1 & 2 Out | 2 | Air Valve | | Valve in light liquid service | > 10 (w/w) |
| Q | Refrigerated CON 1 & 2 Out | 3 | VALVE | Manual valve | Valve in light liquid service | > 10 (w/w) |
| Q | Refrigerated CON 1 & 2 Out | 4 | FL | Outlet from east end of CON1 | Flange | > 10 (w/w) |
| Q | Refrigerated CON 1 & 2 Out | 5 | Air Valve | | Valve in light liquid service | > 10 (w/w) |
| Q | Refrigerated CON 1 & 2 Out | 6 | VALVE | | Valve in light liquid service | > 10 (w/w) |
| Q | Refrigerated CON 1 & 2 Out | 7 | 90 | From CON2 | Other connector | > 10 (w/w) |
| Q | Refrigerated CON 1 & 2 Out | 8 | NIP | 3" for PG | Other connector | > 10 (w/w) |

US EPA ARCHIVE DOCUMENT

# VOC Recovery System

| VOC SYSTEM / RECTANGLE TAGS | | | | | | |
|---|---|---|---|---|---|---|
| **Label** | **COMPONENT/Line** | **Sequence #** | **Pipe Type** | **Description/Note** | **Equip Type** | **Organics** |
| Q | Refrigerated CON 1 & 2 Out | 9 | VALVE | | Valve in light liquid service | > 10 (w/w) |
| Q | Refrigerated CON 1 & 2 Out | 10 | PG | | Other connector | > 10 (w/w) |
| Q | Refrigerated CON 1 & 2 Out | 11 | FT | Flow Transmitter | Other connector | > 10 (w/w) |
| Q | Refrigerated CON 1 & 2 Out | 12 | FL | South of control valve | Flange | > 10 (w/w) |
| Q | Refrigerated CON 1 & 2 Out | 13 | Tee | | Other connector | > 10 (w/w) |
| Q | Refrigerated CON 1 & 2 Out | 14 | Control Valve | | Valve in light liquid service | > 10 (w/w) |
| Q | Refrigerated CON 1 & 2 Out | 15 | FL | North of control valve | Flange | > 10 (w/w) |
| Q | Refrigerated CON 1 & 2 Out | 16 | Reducer | 1" x 2" | Other connector | > 10 (w/w) |
| Q | Refrigerated CON 1 & 2 Out | 17 | 90 | CON2, attached to FL from outlet of CON2 | Other connector | > 10 (w/w) |
| Q | Refrigerated CON 1 & 2 Out | 18 | FL | CON2, bottom air valve | Flange | > 10 (w/w) |
| Q | Refrigerated CON 1 & 2 Out | 19 | FL | CON2, air valve | Flange | > 10 (w/w) |
| Q | Refrigerated CON 1 & 2 Out | 20 | FL | CON2, bottom manual valve | Flange | > 10 (w/w) |
| Q | Refrigerated CON 1 & 2 Out | 21 | FL | CON2, top manual valve | Flange | > 10 (w/w) |
| Q | Refrigerated CON 1 & 2 Out | 22 | 90 | CON1, attached to FL from outlet of CON2 | Other connector | > 10 (w/w) |
| Q | Refrigerated CON 1 & 2 Out | 23 | FL | CON1, bottom air valve | Flange | > 10 (w/w) |
| Q | Refrigerated CON 1 & 2 Out | 24 | FL | CON1, air valve | Flange | > 10 (w/w) |
| Q | Refrigerated CON 1 & 2 Out | 25 | FL | CON1, bottom manual valve | Flange | > 10 (w/w) |
| Q | Refrigerated CON 1 & 2 Out | 26 | FL | CON1, top manual valve | Flange | > 10 (w/w) |
| Q | Refrigerated CON 1 & 2 Out | 27 | Pipe | CON2 to CON1 | Other connector | > 10 (w/w) |
| Q | Refrigerated CON 1 & 2 Out | 28 | Tee | from CON1 | Other connector | > 10 (w/w) |
| Q | Refrigerated CON 1 & 2 Out | 29 | Pipe | from Tee CON1 going north to 90 | Other connector | > 10 (w/w) |
| Q | Refrigerated CON 1 & 2 Out | 30 | 90 | | Other connector | > 10 (w/w) |
| Q | Refrigerated CON 1 & 2 Out | 31 | Pipe | down, 30"L where flow meter is mounted | Other connector | > 10 (w/w) |
| Q | Refrigerated CON 1 & 2 Out | 32 | 90 | | Other connector | > 10 (w/w) |
| Q | Refrigerated CON 1 & 2 Out | 33 | Pipe | 36"L, outlet for flow meter | Other connector | > 10 (w/w) |
| Q | Refrigerated CON 1 & 2 Out | 34 | Reducer | 2" x 3/4"OD | Other connector | > 10 (w/w) |
| Q | Refrigerated CON 1 & 2 Out | 35 | Pipe | 3/4"OD, 12"L | Other connector | > 10 (w/w) |
| Q | Refrigerated CON 1 & 2 Out | 36 | FL | north side flow transmitter | Flange | > 10 (w/w) |
| Q | Refrigerated CON 1 & 2 Out | 37 | FL | south side flow transmitter | Flange | > 10 (w/w) |
| Q | Refrigerated CON 1 & 2 Out | 38 | Tee | splits to carbon and atm | Other connector | > 10 (w/w) |
| R | To Carbon | 1 | Air Valve | | Valve in gas/vapor service | > 10 (w/w) |
| R | To Carbon | 2 | Flanged Tee | for PRV | Other connector | > 10 (w/w) |
| R | To Carbon | 3 | PRV | # 5 (Note: Needs cleaning!) | | |
| R | To Carbon | 4 | Coupling | For PG | Other connector | > 10 (w/w) |

US EPA ARCHIVE DOCUMENT

# VOC Recovery System

| VOC SYSTEM / RECTANGLE TAGS | | | | | | |
|---|---|---|---|---|---|---|
| **Label** | **COMPONENT/Line** | **Sequence #** | **Pipe Type** | **Description/Note** | **Equip Type** | **Organics** |
| R | To Carbon | 5 | NIP | For PG, 1" | Other connector | > 10 (w/w) |
| R | To Carbon | 6 | 90 | For PG | Other connector | > 10 (w/w) |
| R | To Carbon | 7 | NIP | For PG, 3" | Other connector | > 10 (w/w) |
| R | To Carbon | 8 | VALVE | For PG | Valve in gas/vapor service | > 10 (w/w) |
| R | To Carbon | 9 | PG | Pressure Gauge | Other connector | > 10 (w/w) |
| R | To Carbon | 10 | Flame Arrestor | flanged | Other connector | > 10 (w/w) |
| R | To Carbon | 11 | Flanged Pipe | | Other connector | > 10 (w/w) |
| R | To Carbon | 12 | 90 | west | Other connector | > 10 (w/w) |
| R | To Carbon | 13 | UNION | | Other connector | > 10 (w/w) |
| R | To Carbon | 14 | TP | 12" | Other connector | > 10 (w/w) |
| R | To Carbon | 15 | Bushing | 2" x 4" | Other connector | > 10 (w/w) |
| R | To Carbon | 16 | Coupling | Carbon Drum # 1 Top Inlet | Other connector | > 10 (w/w) |
| R | To Carbon | 17 | Coupling | Carbon Drum # 1 Bottom West Side Outlet | Other connector | > 10 (w/w) |
| R | To Carbon | 18 | Bushing | 4" x 2" | Other connector | > 10 (w/w) |
| R | To Carbon | 19 | NIP | | Other connector | > 10 (w/w) |
| R | To Carbon | 20 | 90 | up | Other connector | > 10 (w/w) |
| R | To Carbon | 21 | TP | 3' | Other connector | > 10 (w/w) |
| R | To Carbon | 22 | 90 | west | Other connector | > 10 (w/w) |
| R | To Carbon | 23 | NIP | 3" | Other connector | > 10 (w/w) |
| R | To Carbon | 24 | UNION | | Other connector | > 10 (w/w) |
| R | To Carbon | 25 | NIP | 4" | Other connector | > 10 (w/w) |
| R | To Carbon | 26 | 90 | down | Other connector | > 10 (w/w) |
| R | To Carbon | 27 | TP | 7" | Other connector | > 10 (w/w) |
| R | To Carbon | 28 | Bushing | 2" x 4" | Other connector | > 10 (w/w) |
| R | To Carbon | 29 | Coupling | Carbon Drum # 2 Top Inlet | Other connector | > 10 (w/w) |
| R | To Carbon | 30 | Coupling | Carbon Drum # 2 Bottom West Side Outlet | Other connector | > 10 (w/w) |
| R | To Carbon | 31 | Bushing | 4" x 2" | Other connector | > 10 (w/w) |
| R | To Carbon | 32 | NIP | 2" | Other connector | > 10 (w/w) |
| R | To Carbon | 33 | 90 | up | Other connector | > 10 (w/w) |
| R | To Carbon | 34 | Pipe | TP up 6' | Other connector | > 10 (w/w) |
| R | To Carbon | 35 | Pipe | 10"L down | Other connector | > 10 (w/w) |
| R | To Carbon | 36 | 90 | | Other connector | > 10 (w/w) |
| R | To Carbon | 37 | Pipe | 8" across | Other connector | > 10 (w/w) |
| R | To Carbon | 38 | FL | South air valve | Flange | > 10 (w/w) |

US EPA ARCHIVE DOCUMENT

# VOC Recovery System

| VOC SYSTEM / RECTANGLE TAGS | | | | | | |
|---|---|---|---|---|---|---|
| Label | COMPONENT/Line | Sequence # | Pipe Type | Description/Note | Equip Type | Organics |
| R | To Carbon | 39 | FL | air valve | Flange | > 10 (w/w) |
| R | To Carbon | 40 | FL | north air valve | Flange | > 10 (w/w) |
| R | To Carbon | 41 | FL | end down | Flange | > 10 (w/w) |
| R | To Carbon | 42 | FL | north of tee R2 | Flange | > 10 (w/w) |
| R | To Carbon | 43 | FL | south | Flange | > 10 (w/w) |
| R | To Carbon | 44 | FL | north | Flange | > 10 (w/w) |
| R | To Carbon | 45 | FL | northeast side | Flange | > 10 (w/w) |
| R | To Carbon | 46 | Pipe | across, 40"L | Other connector | > 10 (w/w) |
| R | To Carbon | 47 | 90 | norht | Other connector | > 10 (w/w) |
| R | To Carbon | 48 | Pipe | 8" north | Other connector | > 10 (w/w) |
| R | To Carbon | 49 | 90 | down | Other connector | > 10 (w/w) |
| R | To Carbon | 50 | Pipe | 3" length down | Other connector | > 10 (w/w) |
| S | To Vent | 1 | Air Valve | | Valve in gas/vapor service | > 10 (w/w) |
| S | To Vent | 2 | Reducer | 2" x 3" | Other connector | > 10 (w/w) |
| S | To Vent | 3 | 90 | Up | Other connector | > 10 (w/w) |
| S | To Vent | 4 | Pipe | 3'L | Other connector | > 10 (w/w) |
| S | To Vent | 5 | Pipe | between Tee and air valve | Other connector | > 10 (w/w) |
| S | To Vent | 6 | FL | south air valve | Flange | > 10 (w/w) |
| S | To Vent | 7 | FL | air valve | Flange | > 10 (w/w) |
| S | To Vent | 8 | FL | north air valve | Flange | > 10 (w/w) |
| S | To Vent | 9 | FL | north reducer | Flange | > 10 (w/w) |
| S | To Vent | 10 | 90 | east | Other connector | > 10 (w/w) |
| S | To Vent | 11 | FL | | Flange | > 10 (w/w) |
| S | To Vent | 12 | Pipe | 3" OD pipe with welded end cap and 2" south side | Other connector | > 10 (w/w) |
| T | Refrigerated CON 1 to CR1 Top | 1 | Coupling | | Other connector | > 10 (w/w) |
| T | Refrigerated CON 1 to CR1 Top | 2 | Pipe | CON1 to CR1 top, 5"L | Other connector | > 10 (w/w) |
| T | Refrigerated CON 1 to CR1 Top | 3 | 90 | CON1 to CR1 top | Other connector | > 10 (w/w) |
| T | Refrigerated CON 1 to CR1 Top | 4 | Pipe | CON1 to CR1 top, down, 6" | Other connector | > 10 (w/w) |
| T | Refrigerated CON 1 to CR1 Top | 5 | 90 | CON1 to CR1 top | Other connector | > 10 (w/w) |

US EPA ARCHIVE DOCUMENT

# VOC Recovery System

| VOC SYSTEM / RECTANGLE TAGS | | | | | | |
|---|---|---|---|---|---|---|
| **Label** | **COMPONENT/Line** | **Sequence #** | **Pipe Type** | **Description/Note** | **Equip Type** | **Organics** |
| T | Refrigerated CON 1 to CR1 Top | 6 | Pipe | CON1 to CR1 top, 40"L across | Other connector | > 10 (w/w) |
| T | Refrigerated CON 1 to CR1 Top | 7 | 90 | CON1 to CR1 top | Other connector | > 10 (w/w) |
| T | Refrigerated CON 1 to CR1 Top | 8 | Pipe | CON1 to CR1 top, down | Other connector | > 10 (w/w) |
| T | Refrigerated CON 1 to CR1 Top | 9 | 90 | CON1 to CR1 top | Other connector | > 10 (w/w) |
| T | Refrigerated CON 1 to CR1 Top | 10 | Pipe | CON1 to CR1 top, 12"L | Other connector | > 10 (w/w) |
| T | Refrigerated CON 1 to CR1 Top | 12 | Pipe | From CR1 top | Other connector | > 10 (w/w) |
| T | Refrigerated CON 1 to CR1 Top | 11 | FL | CR1 Top Inlet | Flange | > 10 (w/w) |
| U | Refrigerated CON 1 to CR1 Side | 1 | Pipe | TP out from bottom center of CON1 | Other connector | > 10 (w/w) |
| U | Refrigerated CON 1 to CR1 Side | 2 | Cross | welded | Other connector | > 10 (w/w) |
| U | Refrigerated CON 1 to CR1 Side | 3 | SG | North Flange | Other connector | > 10 (w/w) |
| U | Refrigerated CON 1 to CR1 Side | 4 | SG | South Flange | Other connector | > 10 (w/w) |
| U | Refrigerated CON 1 to CR1 Side | 5 | Reducer | 1" x 2" | Other connector | > 10 (w/w) |
| U | Refrigerated CON 1 to CR1 Side | 6 | FL | Middle West Side Inlet | Flange | > 10 (w/w) |
| U | Refrigerated CON 1 to CR1 Side | 7 | Pipe | down, 2" length | Other connector | > 10 (w/w) |
| U | Refrigerated CON 1 to CR1 Side | 8 | 90 | | Other connector | > 10 (w/w) |
| U | Refrigerated CON 1 to CR1 Side | 9 | Pipe | across, 12" down | Other connector | > 10 (w/w) |
| U | Refrigerated CON 1 to CR1 Side | 10 | 90 | | Other connector | > 10 (w/w) |
| U | Refrigerated CON 1 to CR1 Side | 11 | Pipe | 9"L down | Other connector | > 10 (w/w) |
| U | Refrigerated CON 1 to CR1 Side | 12 | FL | top of cross | Flange | > 10 (w/w) |

US EPA ARCHIVE DOCUMENT

# VOC Recovery System

| VOC SYSTEM / RECTANGLE TAGS | | | | | | |
|---|---|---|---|---|---|---|
| **Label** | **COMPONENT/Line** | **Sequence #** | **Pipe Type** | **Description/Note** | **Equip Type** | **Organics** |
| U | Refrigerated CON 1 to CR1 Side | 13 | FL | bottom of cross | Flange | > 10 (w/w) |
| U | Refrigerated CON 1 to CR1 Side | 14 | 90 | | Other connector | > 10 (w/w) |
| U | Refrigerated CON 1 to CR1 Side | 15 | Pipe | from CR1, 2" | Other connector | > 10 (w/w) |
| V | CR1 | 1 | FL | Top of Level Transmitter | Flange | > 10 (w/w) |
| V | CR1 | 2 | Coupling | Outlet for top of Level Transmitter | Other connector | > 10 (w/w) |
| V | CR1 | 3 | NIP | 1" | Other connector | > 10 (w/w) |
| V | CR1 | 4 | 90 | down | Other connector | > 10 (w/w) |
| V | CR1 | 5 | NIP | 3" | Other connector | > 10 (w/w) |
| V | CR1 | 6 | UNION | | Other connector | > 10 (w/w) |
| V | CR1 | 7 | NIP | 6" | Other connector | > 10 (w/w) |
| V | CR1 | 8 | LT | Bottom of Level Transmitter | Other connector | > 10 (w/w) |
| V | CR1 | 9 | VALVE | Top of SG | Valve in light liquid service | > 10 (w/w) |
| V | CR1 | 10 | VALVE | Bottom of SG | Valve in light liquid service | > 10 (w/w) |
| V | CR1 | 11 | Plug | Bottom of Bottom Valve of SG | Other connector | > 10 (w/w) |
| V | CR1 | 12 | LG | level gauge, south side of CR1 | Other connector | > 10 (w/w) |
| V | CR1 | 13 | VALVE | East CR1 | Open-ended valve or line | > 10 (w/w) |
| V | CR1 | 14 | Plug | Note: Removed extra pieces (NIP, 90, NIP, 90, NI | Other connector | > 10 (w/w) |
| W | Refrigerated CON 2 to CR2 Top | 1 | Coupling | | Other connector | > 10 (w/w) |
| W | Refrigerated CON 2 to CR2 Top | 2 | Pipe | CON2 to CR2 top, 5"L | Other connector | > 10 (w/w) |
| W | Refrigerated CON 2 to CR2 Top | 3 | 90 | CON2 to CR2 top | Other connector | > 10 (w/w) |
| W | Refrigerated CON 2 to CR2 Top | 4 | Pipe | CON2 to CR2 top, down, 6" | Other connector | > 10 (w/w) |
| W | Refrigerated CON 2 to CR2 Top | 5 | 90 | CON2 to CR2 top | Other connector | > 10 (w/w) |
| W | Refrigerated CON 2 to CR2 Top | 6 | Pipe | CON2to CR2 top, 40"L across | Other connector | > 10 (w/w) |
| W | Refrigerated CON 2 to CR2 Top | 7 | 90 | CON2 to CR2 top | Other connector | > 10 (w/w) |

US EPA ARCHIVE DOCUMENT

# VOC Recovery System

| VOC SYSTEM / RECTANGLE TAGS | | | | | | |
|---|---|---|---|---|---|---|
| **Label** | **COMPONENT/Line** | **Sequence #** | **Pipe Type** | **Description/Note** | **Equip Type** | **Organics** |
| W | Refrigerated CON 2 to CR2 Top | 8 | Pipe | CON2 to CR2 top, down | Other connector | > 10 (w/w) |
| W | Refrigerated CON 2 to CR2 Top | 9 | 90 | CON2to CR2 top | Other connector | > 10 (w/w) |
| W | Refrigerated CON 2 to CR2 Top | 10 | Pipe | CON2 to CR2 top, 12"L | Other connector | > 10 (w/w) |
| W | Refrigerated CON 2 to CR2 Top | 12 | Pipe | From CR2 top | Other connector | > 10 (w/w) |
| W | Refrigerated CON 2 to CR2 Top | 11 | FL | CR2 Top Inlet | Flange | > 10 (w/w) |
| X | Refrigerated CON 2 to CR2 Side | 1 | Pipe | TP out from bottom center of CON2 | Other connector | > 10 (w/w) |
| X | Refrigerated CON 2 to CR2 Side | 2 | Cross | Welded | Other connector | > 10 (w/w) |
| X | Refrigerated CON 2 to CR2 Side | 3 | SG | North Flange | Other connector | > 10 (w/w) |
| X | Refrigerated CON 2 to CR2 Side | 4 | SG | South Flange | Other connector | > 10 (w/w) |
| X | Refrigerated CON 2 to CR2 Side | 5 | Reducer | 1" x 2" | Other connector | > 10 (w/w) |
| X | Refrigerated CON 2 to CR2 Side | 6 | FL | Middle West Side Inlet | Flange | > 10 (w/w) |
| X | Refrigerated CON 2 to CR2 Side | 7 | Pipe | down, 2" length | Other connector | > 10 (w/w) |
| X | Refrigerated CON 2 to CR2 Side | 8 | 90 | | Other connector | > 10 (w/w) |
| X | Refrigerated CON 2 to CR2 Side | 9 | Pipe | across, 12" down | Other connector | > 10 (w/w) |
| X | Refrigerated CON 2 to CR2 Side | 10 | 90 | | Other connector | > 10 (w/w) |
| X | Refrigerated CON 2 to CR2 Side | 11 | Pipe | 9"L down | Other connector | > 10 (w/w) |
| X | Refrigerated CON 2 to CR2 Side | 12 | FL | top of cross | Flange | > 10 (w/w) |

US EPA ARCHIVE DOCUMENT

# VOC Recovery System

| VOC SYSTEM / RECTANGLE TAGS | | | | | | |
|---|---|---|---|---|---|---|
| **Label** | **COMPONENT/Line** | **Sequence #** | **Pipe Type** | **Description/Note** | **Equip Type** | **Organics** |
| X | Refrigerated CON 2 to CR2 Side | 13 | FL | bottom of cross | Flange | > 10 (w/w) |
| X | Refrigerated CON 2 to CR2 Side | 14 | 90 | | Other connector | > 10 (w/w) |
| X | Refrigerated CON 2 to CR2 Side | 15 | Pipe | from CR2, 2" | Other connector | > 10 (w/w) |
| Y | CR2 | 1 | FL | Top of Level Transmitter | Flange | > 10 (w/w) |
| Y | CR2 | 2 | Coupling | Outlet for top of Level Transmitter | Other connector | > 10 (w/w) |
| Y | CR2 | 3 | NIP | 1" | Other connector | > 10 (w/w) |
| Y | CR2 | 4 | 90 | down | Other connector | > 10 (w/w) |
| Y | CR2 | 5 | NIP | 3" | Other connector | > 10 (w/w) |
| Y | CR2 | 6 | UNION | | Other connector | > 10 (w/w) |
| Y | CR2 | 7 | NIP | 6" | Other connector | > 10 (w/w) |
| Y | CR2 | 8 | LT | Bottom of Level Transmitter | Other connector | > 10 (w/w) |
| Y | CR2 | 9 | VALVE | Top of SG | Valve in light liquid service | > 10 (w/w) |
| Y | CR2 | 10 | VALVE | Bottom of SG | Valve in light liquid service | > 10 (w/w) |
| Y | CR2 | 11 | Plug | Bottom of Bottom Valve of SG | Other connector | > 10 (w/w) |
| Y | CR2 | 12 | TP | for Drain Valve | Other connector | > 10 (w/w) |
| Y | CR2 | 13 | VALVE | east CR2 | Open-ended valve or line | > 10 (w/w) |
| Y | CR2 | 14 | Plug | Note: Removed extra pieces (NIP, 90, NIP, 90, NI | Other connector | > 10 (w/w) |
| Z | CR2, CR1, S2, S3, & S1 to Pump | 1 | FL | Bottom Outlet from CR2 | Flange | > 10 (w/w) |
| Z | CR2, CR1, S2, S3, & S1 to Pump | 2 | Air Valve | # 38 | Valve in light liquid service | > 10 (w/w) |
| Z | CR2, CR1, S2, S3, & S1 to Pump | 3 | FL | threaded | Flange | > 10 (w/w) |
| Z | CR2, CR1, S2, S3, & S1 to Pump | 4 | NIP | 3" | Other connector | > 10 (w/w) |
| Z | CR2, CR1, S2, S3, & S1 to Pump | 5 | 90 | east | Other connector | > 10 (w/w) |
| Z | CR2, CR1, S2, S3, & S1 to Pump | 6 | NIP | 1" | Other connector | > 10 (w/w) |
| Z | CR2, CR1, S2, S3, & S1 to Pump | 7 | Check Valve | # 7 | Valve in light liquid service | > 10 (w/w) |
| Z | CR2, CR1, S2, S3, & S1 to Pump | 8 | FL | Bottom Outlet from CR1 | Flange | > 10 (w/w) |

US EPA ARCHIVE DOCUMENT

# VOC Recovery System

| VOC SYSTEM / RECTANGLE TAGS | | | | | | |
|---|---|---|---|---|---|---|
| **Label** | **COMPONENT/Line** | **Sequence #** | **Pipe Type** | **Description/Note** | **Equip Type** | **Organics** |
| Z | CR2, CR1, S2, S3, & S1 to Pump | 9 | Air Valve | # 44 | Valve in light liquid service | > 10 (w/w) |
| Z | CR2, CR1, S2, S3, & S1 to Pump | 10 | FL | threaded | Flange | > 10 (w/w) |
| Z | CR2, CR1, S2, S3, & S1 to Pump | 11 | NIP | 3" | Other connector | > 10 (w/w) |
| Z | CR2, CR1, S2, S3, & S1 to Pump | 12 | 90 | east | Other connector | > 10 (w/w) |
| Z | CR2, CR1, S2, S3, & S1 to Pump | 13 | NIP | 1" | Other connector | > 10 (w/w) |
| Z | CR2, CR1, S2, S3, & S1 to Pump | 14 | Check Valve | # 8 | Valve in light liquid service | > 10 (w/w) |
| Z | CR2, CR1, S2, S3, & S1 to Pump | 15 | Multi | TP east from CV # 7, 90 north, 3" pipe, tee with TP into east side from CV # 8 and out north to 1/2" x 1" reducer, 20" pipe with TP down for drain valve # 55, FL | Other connector | > 10 (w/w) |
| Z | CR2, CR1, S2, S3, & S1 to Pump | 16 | Drain Valve | # 55 | Open-ended valve or line | > 10 (w/w) |
| Z | CR2, CR1, S2, S3, & S1 to Pump | 17 | Plug | | Other connector | > 10 (w/w) |
| Z | CR2, CR1, S2, S3, & S1 to Pump | 18 | VALVE | # 45; separates CR2 & CR1 from S2 & S3 | Valve in light liquid service | > 10 (w/w) |
| Z | CR2, CR1, S2, S3, & S1 to Pump | 19 | FL | Bottom Outlet from S2 | Flange | > 10 (w/w) |
| Z | CR2, CR1, S2, S3, & S1 to Pump | 20 | Multi | FL, 2" x 1" reducer, 90, FL | Other connector | > 10 (w/w) |
| Z | CR2, CR1, S2, S3, & S1 to Pump | 21 | VALVE | # 27 | Valve in light liquid service | > 10 (w/w) |
| Z | CR2, CR1, S2, S3, & S1 to Pump | 22 | FL | Bottom Outlet from S3 | Flange | > 10 (w/w) |
| Z | CR2, CR1, S2, S3, & S1 to Pump | 23 | Air Valve | # ?? | Valve in light liquid service | > 10 (w/w) |
| Z | CR2, CR1, S2, S3, & S1 to Pump | 24 | Multi | FL, 6" pipe, 90 north, 8" pipe, 90 east, 3.5' pipe, F | Other connector | > 10 (w/w) |
| Z | CR2, CR1, S2, S3, & S1 to Pump | 25 | VALVE | # 32 | Valve in light liquid service | > 10 (w/w) |

US EPA ARCHIVE DOCUMENT

# VOC Recovery System

| VOC SYSTEM / RECTANGLE TAGS | | | | | | |
|---|---|---|---|---|---|---|
| **Label** | **COMPONENT/Line** | **Sequence #** | **Pipe Type** | **Description/Note** | **Equip Type** | **Organics** |
| Z | CR2, CR1, S2, S3, & S1 to Pump | 26 | Multi | FL from Valve # 27, 3" pipe, 90 north, 12 " pipe, tee with FL and pipe into west side from Valve # 32 and pipe and FL north to check valve # 1 | Other connector | > 10 (w/w) |
| Z | CR2, CR1, S2, S3, & S1 to Pump | 27 | Check Valve | # 1 | Valve in light liquid service | > 10 (w/w) |
| Z | CR2, CR1, S2, S3, & S1 to Pump | 28 | Multi | FL, 3' pipe, 90 down, 4" pipe from valve # 45 into top of tee with south end from FL, 2" pipe from check valve # 1 and north end out to 6' pipe, 90 west, 6" pipe into 1 1/2" pipe connecting from 90, FL from S1 and to pipe, FL to valve just before pump | Other connector | > 10 (w/w) |
| Z | CR2, CR1, S2, S3, & S1 to Pump | 29 | FL | 4" Bottom East Side Outlet from S1 | Flange | > 10 (w/w) |
| Z | CR2, CR1, S2, S3, & S1 to Pump | 30 | FL | threaded | Flange | > 10 (w/w) |
| Z | CR2, CR1, S2, S3, & S1 to Pump | 31 | Bushing | 4" x 1 1/2" | Other connector | > 10 (w/w) |
| Z | CR2, CR1, S2, S3, & S1 to Pump | 32 | NIP | 3" | Other connector | > 10 (w/w) |
| Z | CR2, CR1, S2, S3, & S1 to Pump | 33 | FL | threaded; connected to # 28 above | Flange | > 10 (w/w) |
| Z | CR2, CR1, S2, S3, & S1 to Pump | 34 | VALVE | before pump | Valve in light liquid service | > 10 (w/w) |
| Z | CR2, CR1, S2, S3, & S1 to Pump | 35 | Multi | FL to TP into pump | Other connector | > 10 (w/w) |
| Z | CR2, CR1, S2, S3, & S1 to Pump | 36 | Pump | | Pump in light liquid service | > 10 (w/w) |
| AA | Pump to Receiver by East Trough | 1 | NIP | 3" | Other connector | > 10 (w/w) |
| AA | Pump to Receiver by East Trough | 2 | Check Valve | | Valve in light liquid service | > 10 (w/w) |
| AA | Pump to Receiver by East Trough | 3 | Multi | TP, pipe with to side valve # 4, FL | Other connector | > 10 (w/w) |
| AA | Pump to Receiver by East Trough | 4 | VALVE | # 4 | Valve in light liquid service | > 10 (w/w) |

US EPA ARCHIVE DOCUMENT

# VOC Recovery System

| VOC SYSTEM / RECTANGLE TAGS | | | | | | |
|---|---|---|---|---|---|---|
| **Label** | **COMPONENT/Line** | **Sequence #** | **Pipe Type** | **Description/Note** | **Equip Type** | **Organics** |
| AA | Pump to Receiver by East Trough | 5 | Hose Fitting | for pumping up from sump | Other connector | > 10 (w/w) |
| AA | Pump to Receiver by East Trough | 6 | Multi | FL, 2.5' pipe, 90 up, 5' pipe, 90 NE, 4.5' pipe, 90 up, 4' pipe, 90 north, 18' pipe, 90 east, 18' pipe, socket weld coupling, 4' pipe, 45 down, 6' pipe to threads | Other connector | > 10 (w/w) |
| AA | Pump to Receiver by East Trough | 7 | 45 | east | Other connector | > 10 (w/w) |
| AA | Pump to Receiver by East Trough | 8 | NIP | 1" | Other connector | > 10 (w/w) |
| AA | Pump to Receiver by East Trough | 9 | 45 | NE | Other connector | > 10 (w/w) |
| AA | Pump to Receiver by East Trough | 10 | TP | 4' | Other connector | > 10 (w/w) |
| AA | Pump to Receiver by East Trough | 11 | Bushing | 1" x 2" | Other connector | > 10 (w/w) |
| AA | Pump to Receiver by East Trough | 12 | Coupling | Inlet into NE middle top side of Receiver by East T | Other connector | > 10 (w/w) |
| | | | | | | |
| NOTES: OD = outside diameter, L = length; TP = Threaded Pipe; Reducer = either increasing or reducing | | | | | | |

US EPA ARCHIVE DOCUMENT

# VOC Recovery System

| | | | | | |
|---|---|---|---|---|---|
| **HW State** | **Compliance Method** | **Comments** | **Leak? Y/N** | **Leak Conc.** | **Int.** |
| Gas/Vapor | No detectable emissions | | | | |
| Gas/Vapor | No detectable emissions | | | | |
| Gas/Vapor | No detectable emissions | | | | |
| Gas/Vapor | No detectable emissions | New | | | |
| Gas/Vapor | No detectable emissions | New | | | |
| Gas/Vapor | No detectable emissions | New | | | |
| Gas/Vapor | No detectable emissions | New | | | |
| Gas/Vapor | No detectable emissions | New | | | |
| Gas/Vapor | No detectable emissions | | | | |
| Gas/Vapor | No detectable emissions | | | | |
| Gas/Vapor | No detectable emissions | | | | |
| Gas/Vapor | No detectable emissions | | | | |
| Gas/Vapor | No detectable emissions | | | | |
| Gas/Vapor | No detectable emissions | There's an open end tube sticking out of PT that needs plug(?) | | | |
| Light Liquid | No detectable emissions | | | | |
| Light Liquid | No detectable emissions | | | | |
| Light Liquid | No detectable emissions | New | | | |
| Light Liquid | No detectable emissions | New | | | |
| Light Liquid | No detectable emissions | New | | | |
| Gas/Vapor | No detectable emissions | | | | |
| Gas/Vapor | No detectable emissions | | | | |
| Gas/Vapor | No detectable emissions | New | | | |
| Gas/Vapor | No detectable emissions | New | | | |
| Gas/Vapor | No detectable emissions | | | | |
| Gas/Vapor | No detectable emissions | | | | |
| Gas/Vapor | No detectable emissions | | | | |
| Gas/Vapor | No detectable emissions | | | | |
| Gas/Vapor | No detectable emissions | | | | |
| Gas/Vapor | No detectable emissions | | | | |
| Gas/Vapor | No detectable emissions | | | | |
| Gas/Vapor | No detectable emissions | | | | |
| Gas/Vapor | No detectable emissions | | | | |

US EPA ARCHIVE DOCUMENT

# VOC Recovery System

| | | | | | |
|---|---|---|---|---|---|
| **HW State** | **Compliance Method** | **Comments** | **Leak? Y/N** | **Leak Conc.** | **Int.** |
| Light Liquid | No detectable emissions | | | | |
| Light Liquid | No detectable emissions | | | | |
| Light Liquid | No detectable emissions | Missing plug | | | |
| Light Liquid | No detectable emissions | New | | | |
| Light Liquid | No detectable emissions | New | | | |
| Light Liquid | No detectable emissions | New | | | |
| Light Liquid | No detectable emissions | | | | |
| Light Liquid | No detectable emissions | | | | |
| Light Liquid | No detectable emissions | Not sure if needs plug | | | |
| Light Liquid | No detectable emissions | | | | |
| Light Liquid | No detectable emissions | | | | |
| Light Liquid | No detectable emissions | | | | |
| Gas/Vapor | No detectable emissions | | | | |
| Gas/Vapor | No detectable emissions | | | | |
| Gas/Vapor | No detectable emissions | New | | | |
| Gas/Vapor | No detectable emissions | New | | | |
| Gas/Vapor | No detectable emissions | New | | | |
| Gas/Vapor | No detectable emissions | New | | | |
| Gas/Vapor | No detectable emissions | New | | | |
| Gas/Vapor | No detectable emissions | New | | | |
| Gas/Vapor | No detectable emissions | New | | | |
| Gas/Vapor | No detectable emissions | New | | | |
| Gas/Vapor | No detectable emissions | New | | | |
| Gas/Vapor | No detectable emissions | New | | | |
| Gas/Vapor | No detectable emissions | New | | | |
| Gas/Vapor | No detectable emissions | New | | | |
| Gas/Vapor | No detectable emissions | | | | |
| Gas/Vapor | No detectable emissions | | | | |
| Gas/Vapor | No detectable emissions | | | | |
| Gas/Vapor | No detectable emissions | | | | |
| Light Liquid | No detectable emissions | | | | |
| Light Liquid | No detectable emissions | | | | |
| Light Liquid | No detectable emissions | | | | |

US EPA ARCHIVE DOCUMENT

# VOC Recovery System

| | | | | | |
|---|---|---|---|---|---|
| **HW State** | **Compliance Method** | **Comments** | **Leak? Y/N** | **Leak Conc.** | **Int.** |
| Light Liquid | No detectable emissions | | | | |
| Light Liquid | No detectable emissions | | | | |
| Light Liquid | No detectable emissions | | | | |
| Light Liquid | No detectable emissions | | | | |
| Light Liquid | No detectable emissions | | | | |
| Light Liquid | No detectable emissions | | | | |
| Light Liquid | No detectable emissions | | | | |
| Gas/Vapor | No detectable emissions | New | | | |
| Gas/Vapor | No detectable emissions | New | | | |
| Gas/Vapor | No detectable emissions | New | | | |
| Gas/Vapor | No detectable emissions | New | | | |
| Light Liquid | No detectable emissions | New | | | |
| Light Liquid | No detectable emissions | New | | | |
| Light Liquid | No detectable emissions | New | | | |
| Gas/Vapor | No detectable emissions | | | | |
| Gas/Vapor | No detectable emissions | | | | |
| Gas/Vapor | No detectable emissions | | | | |
| Gas/Vapor | No detectable emissions | | | | |
| Light Liquid | No detectable emissions | | | | |
| Light Liquid | No detectable emissions | | | | |
| Light Liquid | No detectable emissions | | | | |
| Light Liquid | No detectable emissions | | | | |
| Light Liquid | No detectable emissions | | | | |
| Light Liquid | No detectable emissions | | | | |
| Light Liquid | No detectable emissions | | | | |
| Light Liquid | No detectable emissions | | | | |
| Light Liquid | No detectable emissions | | | | |
| Light Liquid | No detectable emissions | | | | |
| Gas/Vapor | No detectable emissions | New | | | |
| Gas/Vapor | No detectable emissions | New | | | |
| Gas/Vapor | No detectable emissions | New | | | |
| Gas/Vapor | No detectable emissions | New | | | |
| Light Liquid | No detectable emissions | New | | | |
| Light Liquid | No detectable emissions | New | | | |

US EPA ARCHIVE DOCUMENT

# VOC Recovery System

| | | | | | |
|---|---|---|---|---|---|
| **HW State** | **Compliance Method** | **Comments** | **Leak? Y/N** | **Leak Conc.** | **Int.** |
| Light Liquid | No detectable emissions | New | | | |
| Light Liquid | No detectable emissions | | | | |
| Light Liquid | No detectable emissions | New | | | |
| Light Liquid | No detectable emissions | New | | | |
| Light Liquid | No detectable emissions | New | | | |
| Light Liquid | No detectable emissions | New | | | |
| Light Liquid | No detectable emissions | New | | | |
| Light Liquid | No detectable emissions | New | | | |
| Light Liquid | No detectable emissions | New | | | |
| Light Liquid | No detectable emissions | | | | |
| Light Liquid | No detectable emissions | New | | | |
| Light Liquid | No detectable emissions | | | | |
| Light Liquid | No detectable emissions | | | | |
| Light Liquid | No detectable emissions | | | | |
| Light Liquid | No detectable emissions | New | | | |
| Light Liquid | No detectable emissions | | | | |
| Light Liquid | No detectable emissions | | | | |
| | | Missing | | | |
| | | | | | |
| | | | | | |
| | | New | | | |
| | | | | | |
| | | | | | |
| | | | | | |
| | | | | | |
| | | New | | | |
| | | | | | |
| | | | | | |
| | | | | | |
| | | | | | |
| | | | | | |
| | | | | | |
| | | | | | |

US EPA ARCHIVE DOCUMENT

# VOC Recovery System

| | | | | | |
|---|---|---|---|---|---|
| **HW State** | **Compliance Method** | **Comments** | **Leak? Y/N** | **Leak Conc.** | **Int.** |
| | | Needs plug. G's might not be necessary because only make-up water. Numbering stops at FL left of valve G3 | | | |
| Gas/Vapor | No detectable emissions | | | | |
| Gas/Vapor | No detectable emissions | | | | |
| Gas/Vapor | No detectable emissions | | | | |
| Gas/Vapor | No detectable emissions | | | | |
| Gas/Vapor | No detectable emissions | | | | |
| | No detectable emissions | | | | |
| Gas/Vapor | No detectable emissions | | | | |
| Light Liquid | No detectable emissions | | | | |
| Light Liquid | No detectable emissions | New | | | |
| Light Liquid | No detectable emissions | New | | | |
| Light Liquid | No detectable emissions | | | | |
| Light Liquid | No detectable emissions | | | | |
| Light Liquid | No detectable emissions | | | | |
| Light Liquid | No detectable emissions | | | | |
| Light Liquid | No detectable emissions | | | | |
| Gas/Vapor | No detectable emissions | | | | |
| Gas/Vapor | No detectable emissions | | | | |
| Gas/Vapor | No detectable emissions | | | | |
| Gas/Vapor | No detectable emissions | | | | |
| Gas/Vapor | No detectable emissions | | | | |
| Gas/Vapor | No detectable emissions | | | | |
| Gas/Vapor | No detectable emissions | | | | |
| Gas/Vapor | No detectable emissions | | | | |
| Light Liquid | No detectable emissions | | | | |
| Light Liquid | No detectable emissions | | | | |
| Light Liquid | No detectable emissions | | | | |
| | | | | | |

US EPA ARCHIVE DOCUMENT

# VOC Recovery System

| | | | | | |
|---|---|---|---|---|---|
| HW State | Compliance Method | Comments | Leak? Y/N | Leak Conc. | Int. |
| | | | | | |
| Gas/Vapor | No detectable emissions | | | | |
| Gas/Vapor | No detectable emissions | | | | |
| Gas/Vapor | No detectable emissions | | | | |
| Gas/Vapor | No detectable emissions | | | | |
| Gas/Vapor | No detectable emissions | | | | |
| Gas/Vapor | No detectable emissions | | | | |
| Gas/Vapor | No detectable emissions | | | | |
| Gas/Vapor | No detectable emissions | | | | |
| Gas/Vapor | No detectable emissions | New | | | |
| Gas/Vapor | No detectable emissions | New | | | |
| Gas/Vapor | No detectable emissions | New | | | |
| Gas/Vapor | No detectable emissions | New | | | |
| Gas/Vapor | No detectable emissions | New | | | |
| Gas/Vapor | No detectable emissions | New | | | |
| Gas/Vapor | No detectable emissions | New | | | |
| Gas/Vapor | No detectable emissions | New | | | |
| Gas/Vapor | No detectable emissions | New | | | |
| Gas/Vapor | No detectable emissions | New | | | |
| Gas/Vapor | No detectable emissions | New | | | |
| Gas/Vapor | No detectable emissions | New | | | |
| Gas/Vapor | No detectable emissions | New | | | |
| Gas/Vapor | No detectable emissions | | | | |
| Light Liquid | No detectable emissions | | | | |
| Light Liquid | No detectable emissions | | | | |
| Light Liquid | No detectable emissions | New | | | |
| Light Liquid | No detectable emissions | New | | | |
| Gas/Vapor | No detectable emissions | | | | |
| Gas/Vapor | No detectable emissions | | | | |
| Light Liquid | No detectable emissions | New | | | |
| Light Liquid | No detectable emissions | New | | | |
| Light Liquid | No detectable emissions | | | | |
| Light Liquid | No detectable emissions | | | | |
| Light Liquid | No detectable emissions | | | | |

US EPA ARCHIVE DOCUMENT

# VOC Recovery System

| | | | | | |
|---|---|---|---|---|---|
| **HW State** | **Compliance Method** | **Comments** | **Leak? Y/N** | **Leak Conc.** | **Int.** |
| Light Liquid | No detectable emissions | | | | |
| Light Liquid | No detectable emissions | | | | |
| Light Liquid | No detectable emissions | | | | |
| Light Liquid | No detectable emissions | | | | |
| Light Liquid | No detectable emissions | | | | |
| Light Liquid | No detectable emissions | | | | |
| Light Liquid | No detectable emissions | | | | |
| Light Liquid | No detectable emissions | Missing plug | | | |
| Light Liquid | No detectable emissions | New | | | |
| Light Liquid | No detectable emissions | New | | | |
| Light Liquid | No detectable emissions | New | | | |
| Light Liquid | No detectable emissions | | | | |
| Light Liquid | No detectable emissions | | | | |
| Light Liquid | No detectable emissions | | | | |
| Light Liquid | No detectable emissions | | | | |
| Light Liquid | No detectable emissions | | | | |
| Light Liquid | No detectable emissions | | | | |
| Light Liquid | No detectable emissions | | | | |
| Light Liquid | No detectable emissions | | | | |
| Light Liquid | No detectable emissions | | | | |
| Light Liquid | No detectable emissions | | | | |
| Light Liquid | No detectable emissions | | | | |
| Light Liquid | No detectable emissions | | | | |
| Light Liquid | No detectable emissions | | | | |
| Light Liquid | No detectable emissions | | | | |
| Light Liquid | No detectable emissions | | | | |
| Light Liquid | No detectable emissions | | | | |
| Light Liquid | No detectable emissions | | | | |
| Light Liquid | No detectable emissions | New | | | |
| Light Liquid | No detectable emissions | New | | | |
| Light Liquid | No detectable emissions | New | | | |
| Light Liquid | No detectable emissions | | | | |
| Light Liquid | No detectable emissions | | | | |

US EPA ARCHIVE DOCUMENT

# VOC Recovery System

| | | | | | |
|---|---|---|---|---|---|
| **HW State** | **Compliance Method** | **Comments** | **Leak? Y/N** | **Leak Conc.** | **Int.** |
| Light Liquid | No detectable emissions | | | | |
| Light Liquid | No detectable emissions | | | | |
| Light Liquid | No detectable emissions | | | | |
| Light Liquid | No detectable emissions | | | | |
| Light Liquid | No detectable emissions | | | | |
| Light Liquid | No detectable emissions | | | | |
| Light Liquid | No detectable emissions | | | | |
| Light Liquid | No detectable emissions | | | | |
| Light Liquid | No detectable emissions | New | | | |
| Light Liquid | No detectable emissions | | | | |
| Light Liquid | No detectable emissions | | | | |
| Light Liquid | No detectable emissions | New | | | |
| Light Liquid | No detectable emissions | New | | | |
| Light Liquid | No detectable emissions | | | | |
| Light Liquid | No detectable emissions | | | | |
| Light Liquid | No detectable emissions | New | | | |
| Light Liquid | No detectable emissions | | | | |
| Light Liquid | No detectable emissions | | | | |
| Light Liquid | No detectable emissions | | | | |
| Light Liquid | No detectable emissions | New | | | |
| Light Liquid | No detectable emissions | | | | |
| Light Liquid | No detectable emissions | | | | |
| Light Liquid | No detectable emissions | | | | |
| Light Liquid | No detectable emissions | | | | |
| Light Liquid | No detectable emissions | | | | |
| Light Liquid | No detectable emissions | | | | |
| Light Liquid | No detectable emissions | | | | |
| Light Liquid | No detectable emissions | | | | |
| Light Liquid | No detectable emissions | | | | |
| Light Liquid | No detectable emissions | | | | |
| Light Liquid | No detectable emissions | | | | |

US EPA ARCHIVE DOCUMENT

# VOC Recovery System

| | | | | | |
|---|---|---|---|---|---|
| **HW State** | **Compliance Method** | **Comments** | **Leak? Y/N** | **Leak Conc.** | **Int.** |
| Light Liquid | No detectable emissions | | | | |
| Light Liquid | No detectable emissions | | | | |
| Light Liquid | No detectable emissions | | | | |
| Light Liquid | No detectable emissions | | | | |
| Light Liquid | No detectable emissions | | | | |
| Light Liquid | No detectable emissions | | | | |
| Light Liquid | No detectable emissions | | | | |
| Light Liquid | No detectable emissions | | | | |
| Light Liquid | No detectable emissions | | | | |
| Light Liquid | No detectable emissions | | | | |
| Light Liquid | No detectable emissions | | | | |
| Light Liquid | No detectable emissions | | | | |
| Light Liquid | No detectable emissions | | | | |
| Light Liquid | No detectable emissions | | | | |
| Light Liquid | No detectable emissions | | | | |
| Light Liquid | No detectable emissions | | | | |
| Light Liquid | No detectable emissions | | | | |
| Light Liquid | No detectable emissions | | | | |
| Light Liquid | No detectable emissions | New | | | |

US EPA ARCHIVE DOCUMENT

# VOC Recovery System

| | | | | | |
|---|---|---|---|---|---|
| **HW State** | **Compliance Method** | **Comments** | **Leak? Y/N** | **Leak Conc.** | **Int.** |
| Light Liquid | No detectable emissions | New | | | |
| Light Liquid | No detectable emissions | New | | | |
| Light Liquid | No detectable emissions | New | | | |
| Light Liquid | No detectable emissions | New | | | |
| Light Liquid | No detectable emissions | New | | | |
| Light Liquid | No detectable emissions | | | | |
| Light Liquid | No detectable emissions | | | | |
| Light Liquid | No detectable emissions | | | | |
| Light Liquid | No detectable emissions | | | | |
| Light Liquid | No detectable emissions | | | | |
| Light Liquid | No detectable emissions | | | | |
| Light Liquid | No detectable emissions | | | | |
| Light Liquid | No detectable emissions | | | | |
| Light Liquid | No detectable emissions | | | | |
| Light Liquid | No detectable emissions | | | | |
| Light Liquid | No detectable emissions | | | | |
| Light Liquid | No detectable emissions | | | | |
| Light Liquid | No detectable emissions | | | | |

US EPA ARCHIVE DOCUMENT

# VOC Recovery System

| | | | | | |
|---|---|---|---|---|---|
| **HW State** | **Compliance Method** | **Comments** | **Leak? Y/N** | **Leak Conc.** | **Int.** |
| Light Liquid | No detectable emissions | | | | |
| Light Liquid | No detectable emissions | | | | |
| Light Liquid | No detectable emissions | | | | |
| Light Liquid | No detectable emissions | | | | |
| Light Liquid | No detectable emissions | | | | |
| Light Liquid | No detectable emissions | | | | |
| Light Liquid | No detectable emissions | | | | |
| Light Liquid | No detectable emissions | | | | |
| Light Liquid | No detectable emissions | | | | |
| Light Liquid | No detectable emissions | | | | |
| Light Liquid | No detectable emissions | | | | |
| Light Liquid | No detectable emissions | | | | |
| Light Liquid | No detectable emissions | | | | |
| Light Liquid | No detectable emissions | | | | |
| Light Liquid | No detectable emissions | | | | |
| Light Liquid | No detectable emissions | | | | |
| Light Liquid | No detectable emissions | | | | |
| Light Liquid | No detectable emissions | | | | |
| Light Liquid | No detectable emissions | | | | |

US EPA ARCHIVE DOCUMENT

# VOC Recovery System

| | | | | | |
|---|---|---|---|---|---|
| **HW State** | **Compliance Method** | **Comments** | **Leak? Y/N** | **Leak Conc.** | **Int.** |
| Light Liquid | No detectable emissions | | | | |
| Light Liquid | No detectable emissions | | | | |
| Light Liquid | No detectable emissions | | | | |
| Light Liquid | No detectable emissions | | | | |
| Light Liquid | No detectable emissions | | | | |
| Light Liquid | No detectable emissions | | | | |
| Light Liquid | No detectable emissions | | | | |
| Light Liquid | No detectable emissions | | | | |
| Light Liquid | No detectable emissions | | | | |
| Light Liquid | No detectable emissions | | | | |
| Light Liquid | No detectable emissions | | | | |
| Light Liquid | No detectable emissions | | | | |
| Light Liquid | No detectable emissions | | | | |
| Light Liquid | No detectable emissions | | | | |
| Light Liquid | No detectable emissions | | | | |
| Light Liquid | No detectable emissions | | | | |
| Light Liquid | No detectable emissions | | | | |
| Light Liquid | No detectable emissions | | | | |
| Light Liquid | No detectable emissions | | | | |

US EPA ARCHIVE DOCUMENT

# VOC Recovery System

| | | | | | |
|---|---|---|---|---|---|
| **HW State** | **Compliance Method** | **Comments** | **Leak? Y/N** | **Leak Conc.** | **Int.** |
| Light Liquid | No detectable emissions | | | | |
| Light Liquid | No detectable emissions | | | | |
| Light Liquid | No detectable emissions | | | | |
| Light Liquid | No detectable emissions | | | | |
| Light Liquid | No detectable emissions | | | | |
| Light Liquid | No detectable emissions | | | | |
| Light Liquid | No detectable emissions | | | | |
| Light Liquid | No detectable emissions | | | | |
| Light Liquid | No detectable emissions | | | | |
| Light Liquid | No detectable emissions | | | | |
| Light Liquid | No detectable emissions | | | | |
| Light Liquid | No detectable emissions | | | | |
| Light Liquid | No detectable emissions | | | | |
| Light Liquid | No detectable emissions | | | | |
| Light Liquid | No detectable emissions | | | | |
| Light Liquid | No detectable emissions | | | | |
| Light Liquid | No detectable emissions | | | | |
| Light Liquid | No detectable emissions | | | | |
| Light Liquid | No detectable emissions | | | | |

US EPA ARCHIVE DOCUMENT

# VOC Recovery System

| | | | | | |
|---|---|---|---|---|---|
| **HW State** | **Compliance Method** | **Comments** | **Leak? Y/N** | **Leak Conc.** | **Int.** |
| Light Liquid | No detectable emissions | | | | |
| Light Liquid | No detectable emissions | | | | |
| Light Liquid | No detectable emissions | | | | |
| Light Liquid | No detectable emissions | | | | |
| Light Liquid | No detectable emissions | New | | | |
| Light Liquid | No detectable emissions | New | | | |
| Light Liquid | No detectable emissions | New | | | |
| Light Liquid | No detectable emissions | New | | | |
| Gas/Vapor | No detectable emissions | | | | |
| Gas/Vapor | No detectable emissions | | | | |
| Gas/Vapor | No detectable emissions | | | | |
| Gas/Vapor | No detectable emissions | | | | |
| Gas/Vapor | No detectable emissions | | | | |
| Gas/Vapor | No detectable emissions | | | | |
| Gas/Vapor | No detectable emissions | | | | |
| Gas/Vapor | No detectable emissions | | | | |
| Gas/Vapor | No detectable emissions | | | | |
| Gas/Vapor | No detectable emissions | | | | |
| Gas/Vapor | No detectable emissions | | | | |

US EPA ARCHIVE DOCUMENT

# VOC Recovery System

| | | | | | |
|---|---|---|---|---|---|
| **HW State** | **Compliance Method** | **Comments** | **Leak? Y/N** | **Leak Conc.** | **Int.** |
| Gas/Vapor | No detectable emissions | New | | | |
| Gas/Vapor | No detectable emissions | New | | | |
| Gas/Vapor | No detectable emissions | New | | | |
| Gas/Vapor | No detectable emissions | New | | | |
| Gas/Vapor | No detectable emissions | New | | | |
| Gas/Vapor | No detectable emissions | New | | | |
| Gas/Vapor | No detectable emissions | New | | | |
| Gas/Vapor | No detectable emissions | New | | | |
| Gas/Vapor | No detectable emissions | New | | | |
| Gas/Vapor | No detectable emissions | New | | | |
| Gas/Vapor | No detectable emissions | New | | | |
| Gas/Vapor | No detectable emissions | New | | | |
| Gas/Vapor | No detectable emissions | New | | | |
| Gas/Vapor | No detectable emissions | New | | | |
| Gas/Vapor | No detectable emissions | New | | | |
| Gas/Vapor | No detectable emissions | New | | | |
| Gas/Vapor | No detectable emissions | New | | | |
| Gas/Vapor | No detectable emissions | New | | | |
| Gas/Vapor | No detectable emissions | New | | | |

US EPA ARCHIVE DOCUMENT

# VOC Recovery System

| | | | | | |
|---|---|---|---|---|---|
| **HW State** | **Compliance Method** | **Comments** | **Leak? Y/N** | **Leak Conc.** | **Int.** |
| Gas/Vapor | No detectable emissions | New | | | |
| Gas/Vapor | No detectable emissions | New | | | |
| Gas/Vapor | No detectable emissions | New | | | |
| Gas/Vapor | No detectable emissions | New | | | |
| Gas/Vapor | No detectable emissions | New | | | |
| Light Liquid | No detectable emissions | | | | |
| Light Liquid | No detectable emissions | | | | |
| Light Liquid | No detectable emissions | | | | |
| Light Liquid | No detectable emissions | | | | |
| Light Liquid | No detectable emissions | | | | |
| Light Liquid | No detectable emissions | | | | |
| Light Liquid | No detectable emissions | | | | |
| Light Liquid | No detectable emissions | | | | |
| Light Liquid | No detectable emissions | | | | |
| Light Liquid | No detectable emissions | | | | |
| Light Liquid | No detectable emissions | | | | |
| Light Liquid | No detectable emissions | | | | |
| Light Liquid | No detectable emissions | Square tag - change to rectangle | | | |
| Light Liquid | No detectable emissions | | | | |
| Light Liquid | No detectable emissions | | | | |
| Light Liquid | No detectable emissions | | | | |
| Light Liquid | No detectable emissions | | | | |
| Light Liquid | No detectable emissions | | | | |
| Light Liquid | No detectable emissions | | | | |
| Light Liquid | No detectable emissions | | | | |
| Light Liquid | No detectable emissions | | | | |
| Light Liquid | No detectable emissions | | | | |
| Light Liquid | No detectable emissions | Missing tag | | | |
| Light Liquid | No detectable emissions | | | | |

US EPA ARCHIVE DOCUMENT

# VOC Recovery System

| | | | | | |
|---|---|---|---|---|---|
| **HW State** | **Compliance Method** | **Comments** | **Leak? Y/N** | **Leak Conc.** | **Int.** |
| Light Liquid | No detectable emissions | | | | |
| Light Liquid | No detectable emissions | | | | |
| Light Liquid | No detectable emissions | | | | |
| Light Liquid | No detectable emissions | | | | |
| Light Liquid | No detectable emissions | | | | |
| Light Liquid | No detectable emissions | | | | |
| Light Liquid | No detectable emissions | | | | |
| Light Liquid | No detectable emissions | | | | |
| Light Liquid | No detectable emissions | New | | | |
| Light Liquid | No detectable emissions | New | | | |
| Light Liquid | No detectable emissions | New | | | |
| Light Liquid | No detectable emissions | New | | | |
| Light Liquid | No detectable emissions | New | | | |
| Light Liquid | No detectable emissions | New | | | |
| Light Liquid | No detectable emissions | New | | | |
| Light Liquid | No detectable emissions | New | | | |
| Light Liquid | No detectable emissions | New | | | |
| Light Liquid | No detectable emissions | New | | | |
| Light Liquid | No detectable emissions | New | | | |
| Light Liquid | No detectable emissions | New | | | |
| Light Liquid | No detectable emissions | New | | | |
| Light Liquid | No detectable emissions | New | | | |
| Light Liquid | No detectable emissions | New | | | |
| Light Liquid | No detectable emissions | New | | | |
| Light Liquid | No detectable emissions | New | | | |
| Light Liquid | No detectable emissions | New | | | |
| Light Liquid | No detectable emissions | New | | | |
| Light Liquid | No detectable emissions | New | | | |
| Light Liquid | No detectable emissions | New | | | |
| Light Liquid | No detectable emissions | New | | | |
| Gas/Vapor | No detectable emissions | | | | |
| Gas/Vapor | No detectable emissions | | | | |
| | No detectable emissions | Missing | | | |
| Gas/Vapor | No detectable emissions | | | | |

US EPA ARCHIVE DOCUMENT

# VOC Recovery System

| | | | | | |
|---|---|---|---|---|---|
| **HW State** | **Compliance Method** | **Comments** | **Leak? Y/N** | **Leak Conc.** | **Int.** |
| Gas/Vapor | No detectable emissions | | | | |
| Gas/Vapor | No detectable emissions | | | | |
| Gas/Vapor | No detectable emissions | | | | |
| Gas/Vapor | No detectable emissions | | | | |
| Gas/Vapor | No detectable emissions | | | | |
| Gas/Vapor | No detectable emissions | | | | |
| Gas/Vapor | No detectable emissions | | | | |
| Gas/Vapor | No detectable emissions | | | | |
| Gas/Vapor | No detectable emissions | | | | |
| Gas/Vapor | No detectable emissions | | | | |
| Gas/Vapor | No detectable emissions | | | | |
| Gas/Vapor | No detectable emissions | | | | |
| Gas/Vapor | No detectable emissions | | | | |
| Gas/Vapor | No detectable emissions | | | | |
| Gas/Vapor | No detectable emissions | | | | |
| Gas/Vapor | No detectable emissions | | | | |
| Gas/Vapor | No detectable emissions | | | | |
| Gas/Vapor | No detectable emissions | | | | |
| Gas/Vapor | No detectable emissions | | | | |
| Gas/Vapor | No detectable emissions | | | | |
| Gas/Vapor | No detectable emissions | | | | |
| Gas/Vapor | No detectable emissions | | | | |
| Gas/Vapor | No detectable emissions | | | | |
| Gas/Vapor | No detectable emissions | | | | |
| Gas/Vapor | No detectable emissions | | | | |
| Gas/Vapor | No detectable emissions | | | | |
| Gas/Vapor | No detectable emissions | | | | |
| Gas/Vapor | No detectable emissions | | | | |
| Gas/Vapor | No detectable emissions | | | | |
| Gas/Vapor | No detectable emissions | | | | |
| Gas/Vapor | No detectable emissions | New | | | |
| Gas/Vapor | No detectable emissions | New | | | |
| Gas/Vapor | No detectable emissions | New | | | |
| Gas/Vapor | No detectable emissions | New | | | |

US EPA ARCHIVE DOCUMENT

# VOC Recovery System

| | | | | | |
|---|---|---|---|---|---|
| **HW State** | **Compliance Method** | **Comments** | **Leak? Y/N** | **Leak Conc.** | **Int.** |
| Gas/Vapor | No detectable emissions | New | | | |
| Gas/Vapor | No detectable emissions | New | | | |
| Gas/Vapor | No detectable emissions | New | | | |
| Gas/Vapor | No detectable emissions | New | | | |
| Gas/Vapor | No detectable emissions | New | | | |
| Gas/Vapor | No detectable emissions | New | | | |
| Gas/Vapor | No detectable emissions | New | | | |
| Gas/Vapor | No detectable emissions | New | | | |
| Gas/Vapor | No detectable emissions | New | | | |
| Gas/Vapor | No detectable emissions | New | | | |
| Gas/Vapor | No detectable emissions | New | | | |
| Gas/Vapor | No detectable emissions | New | | | |
| Gas/Vapor | No detectable emissions | | | | |
| Gas/Vapor | No detectable emissions | | | | |
| Gas/Vapor | No detectable emissions | | | | |
| Gas/Vapor | No detectable emissions | | | | |
| Gas/Vapor | No detectable emissions | New | | | |
| Gas/Vapor | No detectable emissions | New | | | |
| Gas/Vapor | No detectable emissions | New | | | |
| Gas/Vapor | No detectable emissions | New | | | |
| Gas/Vapor | No detectable emissions | New | | | |
| Gas/Vapor | No detectable emissions | New | | | |
| Gas/Vapor | No detectable emissions | New | | | |
| Gas/Vapor | No detectable emissions | New | | | |
| Light Liquid | No detectable emissions | | | | |
| Light Liquid | No detectable emissions | New | | | |
| Light Liquid | No detectable emissions | New | | | |
| Light Liquid | No detectable emissions | New | | | |
| Light Liquid | No detectable emissions | New | | | |

US EPA ARCHIVE DOCUMENT

# VOC Recovery System

| | | | | | |
|---|---|---|---|---|---|
| **HW State** | **Compliance Method** | **Comments** | **Leak? Y/N** | **Leak Conc.** | **Int.** |
| Light Liquid | No detectable emissions | New | | | |
| Light Liquid | No detectable emissions | New | | | |
| Light Liquid | No detectable emissions | New | | | |
| Light Liquid | No detectable emissions | New | | | |
| Light Liquid | No detectable emissions | New | | | |
| Light Liquid | No detectable emissions | New | | | |
| Light Liquid | No detectable emissions | | | | |
| Light Liquid | No detectable emissions | | | | |
| Light Liquid | No detectable emissions | | | | |
| Light Liquid | No detectable emissions | | | | |
| Light Liquid | No detectable emissions | | | | |
| Light Liquid | No detectable emissions | | | | |
| Light Liquid | No detectable emissions | | | | |
| Light Liquid | No detectable emissions | New | | | |
| Light Liquid | No detectable emissions | New | | | |
| Light Liquid | No detectable emissions | New | | | |
| Light Liquid | No detectable emissions | New | | | |
| Light Liquid | No detectable emissions | New | | | |
| Light Liquid | No detectable emissions | New | | | |

US EPA ARCHIVE DOCUMENT

# VOC Recovery System

| | | | | | |
|---|---|---|---|---|---|
| **HW State** | **Compliance Method** | **Comments** | **Leak? Y/N** | **Leak Conc.** | **Int.** |
| Light Liquid | No detectable emissions | New | | | |
| Light Liquid | No detectable emissions | New | | | |
| Light Liquid | No detectable emissions | New | | | |
| Light Liquid | No detectable emissions | | | | |
| Light Liquid | No detectable emissions | | | | |
| Light Liquid | No detectable emissions | | | | |
| Light Liquid | No detectable emissions | | | | |
| Light Liquid | No detectable emissions | | | | |
| Light Liquid | No detectable emissions | | | | |
| Light Liquid | No detectable emissions | | | | |
| Light Liquid | No detectable emissions | | | | |
| Light Liquid | No detectable emissions | | | | |
| Light Liquid | No detectable emissions | Missing | | | |
| Light Liquid | No detectable emissions | | | | |
| Light Liquid | No detectable emissions | | | | |
| Light Liquid | No detectable emissions | | | | |
| Light Liquid | No detectable emissions | | | | |
| Light Liquid | No detectable emissions | New | | | |
| Light Liquid | No detectable emissions | New | | | |
| Light Liquid | No detectable emissions | New | | | |
| Light Liquid | No detectable emissions | New | | | |
| Light Liquid | No detectable emissions | New | | | |
| Light Liquid | No detectable emissions | New | | | |

US EPA ARCHIVE DOCUMENT

# VOC Recovery System

| | | | | | |
|---|---|---|---|---|---|
| **HW State** | **Compliance Method** | **Comments** | **Leak? Y/N** | **Leak Conc.** | **Int.** |
| Light Liquid | No detectable emissions | New | | | |
| Light Liquid | No detectable emissions | New | | | |
| Light Liquid | No detectable emissions | New | | | |
| Light Liquid | No detectable emissions | New | | | |
| Light Liquid | No detectable emissions | | | | |
| Light Liquid | No detectable emissions | | | | |
| Light Liquid | No detectable emissions | | | | |
| Light Liquid | No detectable emissions | | | | |
| Light Liquid | No detectable emissions | | | | |
| Light Liquid | No detectable emissions | | | | |
| Light Liquid | No detectable emissions | | | | |
| Light Liquid | No detectable emissions | New | | | |
| Light Liquid | No detectable emissions | New | | | |
| Light Liquid | No detectable emissions | New | | | |
| Light Liquid | No detectable emissions | New | | | |
| Light Liquid | No detectable emissions | New | | | |
| Light Liquid | No detectable emissions | New | | | |

US EPA ARCHIVE DOCUMENT

# VOC Recovery System

| | | | | | |
|---|---|---|---|---|---|
| **HW State** | **Compliance Method** | **Comments** | **Leak? Y/N** | **Leak Conc.** | **Int.** |
| Light Liquid | No detectable emissions | New | | | |
| Light Liquid | No detectable emissions | New | | | |
| Light Liquid | No detectable emissions | New | | | |
| Light Liquid | No detectable emissions | | | | |
| Light Liquid | No detectable emissions | | | | |
| Light Liquid | No detectable emissions | | | | |
| Light Liquid | No detectable emissions | | | | |
| Light Liquid | No detectable emissions | | | | |
| Light Liquid | No detectable emissions | | | | |
| Light Liquid | No detectable emissions | | | | |
| Light Liquid | No detectable emissions | | | | |
| Light Liquid | No detectable emissions | | | | |
| Light Liquid | No detectable emissions | | | | |
| Light Liquid | No detectable emissions | | | | |
| Light Liquid | No detectable emissions | | | | |
| Light Liquid | No detectable emissions | | | | |
| Light Liquid | No detectable emissions | | | | |
| Light Liquid | No detectable emissions | | | | |
| Light Liquid | No detectable emissions | | | | |
| Light Liquid | No detectable emissions | | | | |
| Light Liquid | No detectable emissions | | | | |
| Light Liquid | No detectable emissions | | | | |
| Light Liquid | No detectable emissions | | | | |
| Light Liquid | No detectable emissions | | | | |

US EPA ARCHIVE DOCUMENT

# VOC Recovery System

| | | | | | |
|---|---|---|---|---|---|
| **HW State** | **Compliance Method** | **Comments** | **Leak? Y/N** | **Leak Conc.** | **Int.** |
| Light Liquid | No detectable emissions | | | | |
| Light Liquid | No detectable emissions | | | | |
| Light Liquid | No detectable emissions | | | | |
| Light Liquid | No detectable emissions | | | | |
| Light Liquid | No detectable emissions | | | | |
| Light Liquid | No detectable emissions | | | | |
| Light Liquid | No detectable emissions | | | | |
| Light Liquid | No detectable emissions | | | | |
| Light Liquid | No detectable emissions | | | | |
| Light Liquid | No detectable emissions | | | | |
| Light Liquid | No detectable emissions | | | | |
| Light Liquid | No detectable emissions | | | | |
| Light Liquid | No detectable emissions | | | | |
| Light Liquid | No detectable emissions | | | | |
| Light Liquid | No detectable emissions | | | | |
| Light Liquid | No detectable emissions | | | | |
| Light Liquid | No detectable emissions | | | | |

US EPA ARCHIVE DOCUMENT

# VOC Recovery System

| | | | | | |
|---|---|---|---|---|---|
| **HW State** | **Compliance Method** | **Comments** | **Leak? Y/N** | **Leak Conc.** | **Int.** |
| Light Liquid | No detectable emissions | | | | |
| Light Liquid | No detectable emissions | | | | |
| Light Liquid | No detectable emissions | | | | |
| Light Liquid | No detectable emissions | | | | |
| Light Liquid | No detectable emissions | | | | |
| Light Liquid | No detectable emissions | | | | |
| Light Liquid | No detectable emissions | | | | |
| Light Liquid | No detectable emissions | | | | |
| Light Liquid | No detectable emissions | | | | |
| Light Liquid | No detectable emissions | | | | |
| Light Liquid | No detectable emissions | | | | |
| Light Liquid | No detectable emissions | | | | |
| Light Liquid | No detectable emissions | | | | |
| Light Liquid | No detectable emissions | | | | |
| Light Liquid | No detectable emissions | | | | |
| Light Liquid | No detectable emissions | | | | |

US EPA ARCHIVE DOCUMENT

# VOC Recovery System

| | | | | | |
|---|---|---|---|---|---|
| **HW State** | **Compliance Method** | **Comments** | **Leak? Y/N** | **Leak Conc.** | **Int.** |
| Light Liquid | No detectable emissions | | | | |
| Light Liquid | No detectable emissions | | | | |
| Light Liquid | No detectable emissions | | | | |
| Light Liquid | No detectable emissions | | | | |
| Light Liquid | No detectable emissions | | | | |
| Light Liquid | No detectable emissions | | | | |
| Light Liquid | No detectable emissions | | | | |
| Light Liquid | No detectable emissions | | | | |
| | | | | | |
| | | | | | |

| Equipment | Compliance |
|---|---|
| Pumps in light liquid service | Monthly LDAR |
| | Dual mechanical seal w/barrier fluid |
| | No Detectable Emissions |
| | Closed-vent system |
| Compressors | Seal w/barrier fluid |
| | Closed-vent system |
| | No Detectable Emissions |
| Pressure relief devices in gas/vapor service | No Detectable Emissions |
| | Closed-vent system |
| Sampling Connection Systems | Closed-purge system |
| | Closed-loop system |
| | Closed-vent system |
| | In-situ system |
| Open-ended valves or lines | Cap, blind flange, plug, or second valve |
| Valves in gas/vapor or light liquid service | Monthly LDAR/skip period quarterly |
| | No Detectable Emissions |
| | Unsafe-to-monitor |
| | Difficult-to-monitor |
| | 2% rule |
| | Skip period annual |
| Valves in heavy liquid service | Monitor on evidence of leak |
| Pumps in heavy liquid service | Monitor on evidence of leak |
| Pressure relief devices in light liquid service | Monitor on evidence of leak |
| Pressure relief devices in heavy liquid service | Monitor on evidence of leak |
| Flanges and other connectors | Monitor on evidence of leak |

US EPA ARCHIVE DOCUMENT