OPERATION, MAINTENANCE, AND MONITORING MANUAL

SOIL VAPOR EXTRACTION SYSTEM
BIG MO & FORMER BENZENE PIPELINE AREAS

W.G. KRUMMRICH FACILITY
500 MONSANTO AVENUE
SAUGET, ILLINOIS

Prepared For:

SOLUTIA, INC
575 MARYVILLE CENTRE DRIVE
ST. LOUIS, MO 63141

Prepared By:

STRATEGIC. ENVIRONMENTAL. SOLUTIONS.

22 MARIN WAY
STRATHAM, NEW HAMPSHIRE 03885
TEL: (603) 778-1100
FAX: (603) 778-2121

JUNE 2012

Version 1.0

OPERATION, MAINTENANCE, AND MONITORING MANUAL

SOIL VAPOR EXTRACTION SYSTEM BIG MO & FORMER BENZENE PIPELINE AREAS

Version No.:	1.0
Version Date:	June 2012
Project Name:	W.G. Krummrich Facility
Site Location	500 Monsanto Avenue, Sauget, IL, 62206

APPROVALS:

Project Manager:

_____

Dennis Keane (Signature) **Date**

Principal:

_____

Michael C. Marley (Signature) **Date**

TABLE OF CONTENTS

TABLE OF CONTENTS ..... **I**
TABLES ..... **IV**
FIGURES ..... **IV**
APPENDICES ..... **IV**
ACRONYMS/ABBREVIATIONS ..... **V**
1.0 INTRODUCTION **1**
1.1 INTENT OF OM&M MANUAL 1
1.2 OVERVIEW OF OM&M MANUAL 1
2.0 PROJECT OVERVIEW AND COMMUNICATIONS **2**
2.1 PROJECT ORGANIZATION 2
2.2 PERSONNEL CONTACT LIST 2
2.3 PROJECT MEETINGS 2
2.4 QUARTERLY SCHEDULE UPDATES 2
2.5 SYSTEM STARTUP/SHUTDOWN PROCEDURES AND OPERATION SUMMARY FORMS 2
2.6 AUTOMATED SYSTEM NOTIFICATIONS/ALARMS 3
2.7 SAFETY AND EMERGENCY COMMUNICATIONS 3
3.0 PROCESS EQUIPMENT **4**
3.1 GENERAL DESCRIPTION OF PROCESS FLOW 4
3.2 SVE SYSTEM WELLS AND VAPOR PROBES 6
3.3 SYSTEM PROCESS EQUIPMENT DETAILS 6
3.3.1 Air-Moisture Separators (AMS 101, AMS 201, AMS 301) 6
3.3.2 Air-Moisture Separator Water Transfer Pumps (TP 101, TP 201, TP 301) 7
3.3.3 Air Particulate Filters (APF 101, APF 201, APF 301) 7
3.3.4 SVE Positive Displacement Blowers (PDB 101, PDB 201, PDB 301) 7
3.3.5 Air Injection Positive Displacement Blowers (AC 901, AC 1001) 7
3.3.6 Oil-Water Separator Unit (OWS 701) and Transfer Pump (TP 701) 7
3.3.7 Liquid-Phase Granular Activated Carbon Vessels (LGAC 701 and LGAC 702) 8
3.3.8 NAPL Product Pump (TP 702) 8
3.4 EXTERNAL PROCESS EQUIPMENT 8
3.4.1 NAPL Storage Drum 8
3.4.2 Carbon Filter Ventilation System 9
3.4.3 Thermal Oxidation Units (ThermOx) 9
3.5 INSTRUMENTATION AND CONTROL INTERFACE 9
3.5.1 Process Instrumentation 9
3.5.2 PLC Interface 11
3.5.3 Autodialer 11
3.5.4 System Interface and Wireless Modem Telemetry System 12
3.5.5 Heating and Ventilation 12
3.5.6 Outdoor Signal Beacon 12
3.6 ELECTRICAL DIAGRAMS 12
4.0 PRE-STARTUP COMMISSIONING **13**
4.1 PRE-STARTUP SAFETY REVIEW MEETINGS 13
4.2 PRE-STARTUP CHECKLISTS 13

4.3 INITIAL STARTUP OF THERMAL OXIDIZER UNITS 13
4.3.1 Natural Gas Fuel Supply Leak Test 14
4.3.2 ThermOx Startup Procedures 14
4.3.3 Operation of the SVE System with the ThermOx Units 14
4.4 SYSTEM COMPONENT INSTALLATION/OPERATION CHECK 15
4.4.1 Manual Electric Motor Checks 16
4.4.2 Pressure and Vacuum Relief Valves Settings Check 16
4.4.3 ThermOx Pre-Startup Operation Check 16
4.4.4 System Automation/Alarm Conditions Check 16
4.4.5 Telemetry Check 17
4.5 WATER REMOVAL 17
5.0 OPERATIONS 18
5.1 SYSTEM MONITORING 18
5.1.1 Monthly General System Monitoring 18
5.1.2 Additional Quarterly System Monitoring 20
5.1.3 Additional Annual Performance Monitoring 20
5.2 DATA EVALUATION 20
5.3 GENERAL RECORDKEEPING 21
5.3.1 Log Books 21
5.3.2 Data Submittal 21
5.4 DATA REPORTING 21
5.5 SYSTEM STARTUP/OPERATION PROCEDURES 22
5.5.1 SVE/AI Wellhead Configurations 22
5.5.2 Avoiding Alarm Conditions When Adjusting SVE/AI Configuration 23
5.5.3 ThermOx Startup Procedure 23
5.5.4 SVE System Startup Procedure 24
5.5.5 AI Startup Procedure 25
5.5.6 NAPL Transfer Pump Operation Procedures 25
5.5.7 NAPL Drum Change-Out/Movement Procedures 27
5.6 SHUTDOWN PROCEDURES 28
5.7 EMERGENCY SHUTDOWN POLICY AND PROCEDURES 28
5.7.1 ThermOx Emergency Shutdown 29
5.7.2 SVE/AI Emergency Shutdown 29
5.7.3 Natural Gas Shutoff 29
5.8 POLICY REGARDING OVERRIDING SYSTEM ALARMS AND INTERLOCKS 29
6.0 SAFETY 30
6.1 OVERVIEW 30
6.2 MANAGEMENT OF CHANGE (MOC) PROCESS FOR THE SVE SYSTEM 31
6.3 CONTAMINANTS OF CONCERN 31
6.4 PHOTOIONIZATION DETECTOR AND CALIBRATION 31
6.4.1 PID Instrument Specification 32
6.4.2 Interpretation of PID Readings for Health and Safety Purposes 32
6.5 SPECIFIC SAFETY PROCEDURES 32
6.5.1 Equipment Shed Pre-Entry Observations 32
6.5.2 LEL Monitoring 33
6.6 PROCESS AND EQUIPMENT SAFETY CHECKLISTS 34

6.7 SITE SAFETY AND SECURITY 34
6.8 EMERGENCY EVACUATION PROCEDURES 34
6.9 EMERGENCY EYEWASH STATION 34
6.10 LOCK-OUT/TAG-OUT PROCEDURES 35
6.11 FIRE EXTINGUISHERS AND FIRST AID KITS 35
7.0 MAINTENANCE 36
7.1 OVERVIEW 36
7.2 PHYSICAL INSPECTIONS AND GENERAL MAINTENANCE 36
7.2.1 Procedures for Breaking Into Piping and Equipment 36
7.3 EQUIPMENT MAINTENANCE 38
7.3.1 SVE and AI Blower Maintenance 38
7.3.2 ThermOx Maintenance 39
7.3.3 Air Particulate Filters 39
7.3.4 Liquid Granular Activated Carbon Maintenance 39
7.3.5 Bag Filter Maintenance 39
7.3.6 Carbon Filter Ventilation System Maintenance 39
7.4 DRUM AND SATELLITE WASTE ACCUMULATION INSPECTIONS 40
8.0 TROUBLESHOOTING PROCEDURES 41
9.0 OPERATING CONTINGENCY PLANS 43
9.1 POWER FAILURE 43
9.2 MANIFOLD PIPING FAILURE 43
9.3 BLOWER FAILURE 43
9.4 DISCHARGE PERMIT NON-COMPLIANCE 43
9.5 LIQUID RELEASE/SPILLS 44

TABLES

Table 1 Project Contact Information
Table 2 SVE Well and Vapor Probe Construction Details
Table 3 System Alarm Schedule
Table 4 System Monitoring Schedule
Table 5 Compliance Monitoring Schedule
Table 6 Maintenance Schedule

FIGURES

Figure 1 Site Map
Figure 2 SVE System Wellfield and Manifold Piping Layout
Figure 3 Typical SVE Well and Vapor Point

APPENDICES

Appendix A System Startup/Shutdown Procedures and Operation Forms and Checklists
Appendix B Process and Instrumentation Diagrams (P&ID) and Drawings
Appendix C Process Equipment Operation and Maintenance Manual
Appendix D ThermOx Operation and Maintenance Manual
Appendix E Graphical User Interface Manuals
Appendix F Electrical Diagrams
Appendix G Air and Water Discharge Permits
Appendix H Shutdown Protocol

ACRONYMS/ABBREVIATIONS

A	Amperes (Amps)
AC	Alternating Current
AI	Air Injection
AMS	Air Moisture Separator
APF	Air Particulate filter
bgs	Below Ground Surface
BPF	Bag Particulate Filter
CAAP	Clean Air Act Program
COCs	Contaminants of Concern
CT	Central Time
eV	Electron Volts
dBA	Decibels
FA	Flame Arrestor
FIA	Flow Indicator Analog
FLA	Full Load Amps
FM	Flow Measurement
FS	Flow Switch
FT	Flow Transmitter
gpm	Gallons per Minute
GUI	Graphical User Interface
GV	Gate Valve
HASP	Health and Safety Plan
HM	Hour Meter
HOA	Hand Off Auto
Hp	Horsepower
IDLH	Immediately Dangerous to Life and Health
IEPA	Illinois Environmental Protection Agency
In. Hg	Inches of Mercury (vacuum)
LEL	Lower Explosive Limit
LGAC	Liquid Granular Activated Carbon
LT	Level Transmitters
MD	Manual Drain
MOC	Management of Change
NAPL	Non-aqueous phase liquid
NFPA	National Fire Protection Association
NT	NAPL Tank
OM&M	Operations, Maintenance, and Monitoring
OWS	Oil Water Separator
P&ID	Process and Instrumentation Diagrams
PDB	Positive Displacement Blower
PI	Pressure Indicator
PID	Photoionization Detector
PLC	Programmable Logic Controller

ACRONYMS/ABBREVIATIONS
(continued)

PPE	Personal Protection Equipment
ppmv	Parts per million, by volume (vapor concentration)
PRV	Pressure Relief Valve
psig	Pounds Per Square Inch, Gauge (pressure)
PS/PT	Pressure Switch/Pressure Transmitter
PSSR	Pre-startup safety review
PVC	Polyvinyl Chloride
RF	Response Factor
scfm	Standard Cubic Feet Per Minute
SHU	Shallow Hydrogeologic Unit
SI	Silencer
Solutia	Solutia Inc.
SP	Sample Point
SVE	Soil Vapor Extraction
TEFC	Totally Enclosed, Fan Cooled (electric motor)
ThermOx	Thermal Oxidizer
TI	Temperature Indicator
TIA	Temperature Indicator Analog
TP	Transfer Pump
TSH	Temperature Switch High
µg/kg	Microgram per Kilogram
USDOT	United States Department of Transportation
USEPA	United States Environmental Protection Agency
V	Volts
VI	Vacuum Indicator
VIA	Vacuum Indicator Analog
VOCs	Volatile Organic Compounds
VRV	Vacuum Relief Valve
XDD	XDD, LLC
ϕ	Phase (electrical)

1.0 INTRODUCTION

This Operation, Maintenance, and Monitoring (OM&M) Manual provides procedures for performing routine operation, maintenance, and process/compliance monitoring for the soil vapor extraction (SVE) system in the Big Mo and Former Benzene Pipeline treatment areas (refer to **Figure 1**) at the W.G. Krummrich facility in Sauget, IL (site). The objective of the SVE system is to remove volatile organic compounds (VOCs), consisting primarily of benzene, from unsaturated zone soils.

1.1 INTENT OF OM&M MANUAL

This OM&M Manual is for the operation of the SVE treatment system. This OM&M Manual will be used in conjunction with the Work Plan for Full-Scale Soil Vapor Extraction dated November 2010 (Work Plan) and the 100% Soil Vapor Extraction System Design – Big Mo & Former Benzene Pipeline Areas, dated October 2011 (100% design). The Work Plan includes complete details on the site background and remedial goals, the design approach, and a general overview of operations and monitoring. The 100% design document includes the complete system design process and instrumentation diagrams (P&IDs) and specification tables.

1.2 OVERVIEW OF OM&M MANUAL

This OM&M Manual is organized as follows:

- **Section 2.0** – Project organization and contact information.
- **Section 3.0** – Overview of the process equipment.
- **Section 4.0** – Initial system startup/shakedown procedures.
- **Section 5.0 –** General operations, process and compliance monitoring procedures, and data evaluation for the SVE system.
- **Section 6.0** – Safety guidelines and procedures.
- **Section 7.0** – SVE system maintenance information.
- **Section 8.0** – SVE system troubleshooting procedures.
- **Section 9.0** – Contingency plan for interruptions in system operations.

2.0 PROJECT OVERVIEW AND COMMUNICATIONS

2.1 PROJECT ORGANIZATION

Solutia Inc. (Solutia) is the Project Owner, and has overall responsibility for carrying out the SVE Work Plan. The Solutia W.G. Krummrich Facility personnel are providing logistical support for the project.

Solutia has retained XDD, LLC (XDD) to design, build, implement, and operate the SVE program. For the purposes of this OM&M Manual, XDD personnel will act in the Project Engineer and System Operator roles.

2.2 PERSONNEL CONTACT LIST

The project personnel representing the above organizations and their contact information are presented in **Table 1**. Other pertinent contact information (e.g. Security, etc.) is also provided in **Table 1**.

2.3 PROJECT MEETINGS

The following regular communications will be conducted as part of the system operation:

1. **Monthly Project Conference Calls**: The purpose of the monthly conference call will be to discuss general status of system operation, any operational/maintenance issues that may have arisen over the period, and coordination of future activities.

2. **Monthly Facility Meetings/Drills**: There are two monthly facility meetings to be attended by one representative from the System Operator personnel (and Project Engineer personnel, if on-site):

   a. All Contractors Safety Meeting – Conducted on the last Thursday of each month, 10:00 a.m. at the W.G. Krummrich Facility.
   b. Plant-Wide Headcount Drill – Conducted second Thursday of each month, 1:30 p.m. (assembly point is the **ACL Control Room** to the northeast of the treatment area, or, if not at the treatment area, the closest control room may be used).

3. **Quarterly Project Status Meetings**: XDD will meet on-site with Solutia every quarter to discuss the project status and any operational issues.

2.4 QUARTERLY SCHEDULE UPDATES

A detailed project schedule that covers anticipated activities over a running six-month period will be updated and submitted to Solutia on a quarterly basis. The schedule will provide details of the upcoming activities and other planned events. The Project Engineer will be responsible for performing the schedule updates.

2.5 SYSTEM STARTUP/SHUTDOWN PROCEDURES AND OPERATION SUMMARY FORMS

Procedures for system startup/shutdown as well as system operation summary forms are provided in **Appendix A**. Applicable system operation summary forms will be completed and

submitted to Solutia every month. The forms provide a summary of the system operational statistics and other system activities (e.g., routine maintenance, shutdowns, etc.). The system operation summary forms include:

1. General system performance monitoring results.
2. Documentation of compliance sampling.
3. Routine maintenance logs.
4. Documentation of non-routine maintenance, repairs, and any corrective measures.
5. Description of any interruptions in system operation (reason, duration, etc.).
6. Documentation of water treatment and discharge to sewer.

2.6 AUTOMATED SYSTEM NOTIFICATIONS/ALARMS

The system is equipped with a wireless-based telemetry and alarm/fault autodialer system. All alarm or other fault conditions will be immediately communicated to the Project Engineer and the System Operator via the autodialer. The responses to alarm conditions are provided in this manual (see **Section 9.0** of this manual).

The System Operator will communicate any developing operational issues or maintenance items to the Project Engineer as soon as they are recognized.

2.7 SAFETY AND EMERGENCY COMMUNICATIONS

During system operations, the System Operator (and other project personnel as needed) will check in with the facility Security desk upon arrival to the site and upon exit at the end of the activities.

EMERGENCY COMMUNICATION: A two-way radio with an emergency "man-down" call button will be supplied by Solutia. In the event of a serious accident or other medical emergency, use of this feature will provide an expedited response.

3.0 PROCESS EQUIPMENT

SVE will be implemented within the unsaturated portion of the Shallow Hydrogeologic Unit (SHU) (approximately 0 to 15 feet below ground surface [bgs]) using a dual-level SVE and air injection (AI) well network (i.e., shallow and deep well screens). The SVE process equipment consists of two main systems: The SVE and the AI systems. The SVE and AI systems Process and Instrumentation Diagrams (P&IDs) are presented in **Appendix B**.

The SVE portion of the process will extract vapors containing chemicals of concern (COCs), and the vapor will be treated using a thermal oxidation (ThermOx) unit prior to atmospheric discharge. During approximately the first year of operation, two ThermOx units will be operated to increase the total capacity of the system to treat vapors. The AI portion of the process will be used to provide a source of dilution air to the subsurface which improves the overall performance of the SVE process.

Condensation that is collected by the SVE system will be separated from the process stream using three separate air-moisture separator (AMS) units in parallel. Condensate (soil moisture and potentially non-aqueous phase liquid [NAPL]) collected in each AMS will be automatically transferred to the oil water separator (OWS), which is equipped with an internal NAPL storage tank. When the NAPL storage tank in the OWS reaches capacity, the NAPL will be manually transferred into 55-gallon drums to be disposed of by Solutia. Water from the OWS will be pumped through two liquid-phase granular activated carbon (LGAC) units for treatment. The treated water will then be discharged to a facility process sewer.

Specific details of each piece of the process equipment are discussed in the following subsections.

3.1 GENERAL DESCRIPTION OF PROCESS FLOW

The general system process flow is described below, starting from the wellfield, through the various process equipment, and finally through the air/water discharge treatment systems:

1. **Vapor Extraction/Air Injection at the SVE and SVE/AI Wells**:

   The SVE and AI systems are designed to operate within the shallow fill, upper silty sand, and the lower silty sand soil layers of the SHU. The combination SVE/AI wells are designed to be operated in either vapor extraction or air injection modes. The mode they operate in is controlled by configuring the gate valves provided on the wellhead assemblies. By configuring the combination SVE/AI wells in either mode, subsurface air flow patterns can be modified.

   The SVE system will be operated in one of the two target soil layers at a given time. Seasonal fluctuations of the water table will not allow continuous operation in the lower silty sand layer; therefore, it is more cost-effective to operate the SVE system to focus on one target layer at a time.

   As SVE treatment progresses, it is typical that some areas will clean up faster. During system optimization, those areas which have achieved remediation objectives can be

taken offline, and the system resources can be refocused in both the deep and shallow areas concurrently.

The majority of the SVE and combination SVE/AI wells are completed above grade with manifold piping. Wells installed in road/access ways are completed below grade in a flush mounted road box with subsurface piping leading to the main system manifold.

2. **Field Piping Manifold Systems**: The SVE and Air Injection systems are connected to the process equipment using separate manifold piping systems. Air and potential moisture is conveyed between the wells to the process equipment through these manifold systems.

   To facilitate water drainage within the process piping, the main manifold piping is angled in an upward direct away from the SVE equipment at a slope of 1 inch per 100 feet and the branch lines are angled down away from the main SVE line towards the wells at a slope of 1 inch per 100 feet. All AI manifolding are angled from the SVE equipment towards the wells at a slope of 1 inch per 100 feet. Cleanouts are included on the terminus of each branch line.

3. **Air-Moisture Separation**: Soil vapor extracted by the SVE system will manifold into three separate lines, each with its own AMS unit located inside of the equipment shed.

   Water collected in the air-moisture separators will be pumped to a common oil-water separator unit (see Item No. 6 for the continuation of this liquid process stream).

4. **SVE Blowers/Air Injection Equipment**: The SVE and Air Injection systems are installed within the equipment shed.

   For the SVE system, inlet air is separated into three air/vapor streams. Each air/vapor stream will first pass through its respective AMS unit, and will then be drawn through the corresponding SVE blower. The three air/vapor streams are then combined into single air discharge manifold after passing through the blowers.

   The Air Injection is a completely independent process from the SVE system and will use two separate air compressors to provide flow to the combination SVE/AI wells (when the wells are set to operate in pressurized injection mode).

5. **Air Treatment and Discharge to Atmosphere**: The combined air flow from the discharge of the two SVE systems will initially be routed through two ThermOx units. The ThermOx units will destroy VOCs in the air stream prior to discharge to the atmosphere (treated per the requirements of the Illinois Environmental Protection Agency (IEPA) air permit, as discussed later in this manual).

6. **Oil-Water Separation**: As discussed in Item No. 3 above, water and potential NAPLs will be collected in the AMS units. These liquids will be pumped to the Oil Water Separator unit. The NAPL component will be separated and stored within an internal storage tank (14-gallon capacity). NAPL will be manually pumped from the OWS NAPL storage tank to a United States Department of Transportation (USDOT)-approved

55-gallon steel drum equipped with secondary containment, for off-site disposal. The water component will be pumped from the OWS for treatment (see Item No. 7).

7. **Water Treatment and Discharge**: As discussed in Item No. 6 above, water from the process will be pumped through a bag particulate filter and two LGAC units prior to discharge into the plant storm sewer (treated per requirements of the site discharge permit, as discussed later in this manual).

3.2 SVE System Wells and Vapor Probes

As-built construction details of the SVE wells and vapor probes are provided in **Table 2** and the locations are shown on **Figure 2**. Schematics of typical SVE well and vapor point construction are shown on **Figure 3.**

There are a total of 156 SVE wells and 32 vapor points in the target area. SVE wells and probes are constructed of stainless steel well screens with galvanized steel risers.

Shallow and Deep SVE Wells:

There are 75 shallow and 81 deep wells for a total of 156 wells. A total of 72 of the SVE wells are co-located shallow and deep, with an additional 12 single well locations (3 shallow and 9 deep). A total of 84 wells (39 shallow and 45 deep) will be connected to SVE piping only and a total of 72 wells will be connected to combination SVE/AI wellheads (36 shallow and 36 deep).

The shallow well screens vary in length (between 2 to 5 feet), and are generally positioned less than 10 feet bgs. The deep well screens are approximately 4 feet long, and are positioned between 11 and 15 feet bgs. The shallow and deep wells are designed to target the fill/upper silty sand, and lower silty sand layers, respectively.

Vapor Probes: In addition to the SVE wells, a total of 32 vapor probes are installed at 16 locations throughout the target area at various depths (Refer to **Figure 2**). Each vapor probe consists of 1" diameter nested shallow and deep wells constructed with 1 foot stainless steel screens with galvanized steel risers.

3.3 System Process Equipment Details

The system P&IDs are presented in **Appendix B**. Component specifications are included in **Appendix C**. The major system components within the equipment shed are discussed in this section.

3.3.1 Air-Moisture Separators (AMS 101, AMS 201, AMS 301)

The AMS units are part of the SVE system. Equipment specifications are provided in **Appendix C**.

All three AMS units are equipped with level transmitters (LT 101, LT 201, LT 301). The level transmitters use high-frequency microwave pulses that are coupled to a rod and guided along a probe. The pulses are reflected by the liquid surface and the time from emission to reception of the signals is proportional to the level in the vessel. The level is transmitted to the programmable logic controller (PLC) which translates the signal into a percentage “full”. Low, high, and high-

high-level percentages are set in the system control logic. The low-level and high-level signals operate the corresponding AMS transfer pump (see **Section 3.3.2**). The high-high-level signal is designed to prevent overfilling of the AMS units and will trigger a controlled shutdown of the entire system.

3.3.2 AIR-MOISTURE SEPARATOR WATER TRANSFER PUMPS (TP 101, TP 201, TP 301)

Water transfer pumps TP 101, TP 201, and TP 301 are designed to transfer water/liquids from the corresponding air-moisture separators (see **Section 3.3.1**) to the Oil Water Separator (OWS 701, see **Section 3.3.6**). Pump specifications are provided in **Appendix C**.

3.3.3 AIR PARTICULATE FILTERS (APF 101, APF 201, APF 301)

The filters are designed to remove any particles from the air/vapor streams to protect the system blowers. Filter specifications are provided in **Appendix C**.

3.3.4 SVE POSITIVE DISPLACEMENT BLOWERS (PDB 101, PDB 201, PDB 301)

The SVE Blowers are ROOTS™ 711 Universal RAI Rotary Positive Blower (rotary lobe type). Each electric motor is a 40 horsepower (Hp), Totally Enclosed, Fan Cooled (TEFC) Class I Division II motor. The motor operates at 460 volts (V), 3-phase (ϕ), and 52 full-load Amps (FLA); the motor electrical specification is abbreviated as 460/3/52. Each blower is sized to be capable of maintaining a flow of 750 standard cubic feet per minute (scfm) at 10 inches of mercury (in. Hg) vacuum at the equipment shed inlet. The blowers are each equipped with a muffler/silencer to reduce noise (SI 101, SI 201, SI 301). Refer to the manufacturer specifications for full details on the blower and the electric motor, provided in **Appendix C**.

3.3.5 AIR INJECTION POSITIVE DISPLACEMENT BLOWERS (AC 901, AC 1001)

The Air Injection Blower is a ROOTS™ 59 Universal RAI Rotary Positive Blower (rotary lobe type) 30 Hp, TEFC, Class I Division II motor. The motor operates at 460 V, 3ϕ and 40 FLA. Each blower is sized to be capable of supplying 750 scfm at 15 pounds per square inch gauge (psig) pressure at the equipment shed outlet. The blowers are equipped with a muffler/silencer to reduce noise (SI 901 and SI 1001). Refer to the manufacturer specifications for full details on the blower and the electric motor, provided in **Appendix C**.

3.3.6 OIL-WATER SEPARATOR UNIT (OWS 701) AND TRANSFER PUMP (TP 701)

The oil/water separator unit is a Hydro Quip, Inc unit. This unit is designed to separate free and dispersed NAPL contained in water pumped from the AMS units. See **Section 3.4.2** for the vapor venting system that is associated with this unit.

The OWS will have a maximum treatment flow capacity of 30 gallons per minute (gpm). The OWS will have a 90-gallon capacity, effluent pump out compartment and integral NAPL storage compartment. The OWS equipment specifications and manufacturer's operation manuals are provided in **Appendix C**.

Coalesced NAPL is skimmed from the water surface via a weir system and collected in an internal, sealed NAPL tank (NT 701). The NAPL tank is equipped with a high-level transmitter (LT 702, as described in **Section 3.3.1**) that is programmed with a high-level alarm that will send

an autodialer signal to the System Operator and Project Engineer when the NAPL tank within the OWS unit has reached a pre-determined level (and requires draining). The level transmitter is also programmed with a high-high level alarm in the event the NAPL tank has reached its capacity. The high-high alarm will trigger a full shut-down of the SVE/AI systems, including the ThermOx unit(s). The NAPL will be drained manually as needed using the NAPL product pump (TP 702, see **Section 3.3.8** of this manual).

Water from the OWS unit (after NAPL separation) is pumped via transfer pump TP 701 and filtered through a bag particulate filter (BPF 701). The water is then treated by the LGAC units (LGAC 701 and LGAC 702) (discussed in **Section 3.3.7**).

3.3.7 Liquid-Phase Granular Activated Carbon Vessels (LGAC 701 and LGAC 702)

Each of the two LGAC units contains 500 pounds of activated carbon and is rated for a 30-gpm flow capacity. The LGAC equipment specifications and manufacturer's operation manuals are provided in **Appendix C**.

3.3.8 NAPL Product Pump (TP 702)

NAPL collected in the OWS internal NAPL Tank will be transferred to a storage drum (see **Section 3.4.1**) using a manually operated, gear-type chemical pump. Product pump specifications are provided in **Appendix C**.

Refer to **Section 3.4.1** for a description of the chemical transfer hose system and NAPL storage drum equipment used to contain and store any product removed from the Oil Water Separator internal NAPL Tank.

3.4 External Process Equipment

This section provides details on the process equipment located outside of the process equipment shed. The system process and instrumentation diagrams (P&IDs) are presented in **Appendix B**.

3.4.1 NAPL Storage Drum

The NAPL storage drum will be a standard USDOT-approved 55-gallon steel drum with two bung openings. The NAPL storage drum will be placed on a secondary containment unit in a satellite accumulation area. See **Section 7.4** for additional information associated with the inspection of the satellite accumulation area.

The outlet from the OWS internal NAPL tank (see **Section 3.3.6**) is connected to the chemical transfer pump (see **Section 3.3.8**), which will then discharge through a chemical-compatible hose (Transfer Hose) into the NAPL storage drum.

The Transfer Hose system will be equipped with ball-valves on each end. The Transfer Hose system will only be connected to the NAPL drum during the actual NAPL transfer. Also, during filling of the NAPL storage drum, the drum will be vented (using the second bung opening) using a flexible piping system connected to a carbon filter vent unit (refer to **Section 3.4.2**).

3.4.2 Carbon Filter Ventilation System

The OWS unit (see **Section 3.3.6**) is passively vented through a 100-pound granular activated carbon (GAC) drum (CF 701) via flexible hose connections. The discharge of the GAC drum is equipped with a flame arrestor (FA 701) and a PVC pipe discharge stack. As discussed in **Section 3.4.1**, the vent (bung) of the NAPL storage drum will also be connected to this GAC drum via flexible hose connections (but only during manual filling of the drum) for passive ventilation purposes.

3.4.3 Thermal Oxidation Units (ThermOx)

Initially, two Intellishare Environmental, Inc. (Intellishare) Thermal Oxidation Units (ThermOx Units TOX 501 and TOX 601) will be used to treat the air discharge from the SVE systems prior to discharge to atmosphere. Full details of the operation of the ThermOx units are provided in the Operation & Maintenance Guide provided by Intellishare in **Appendix D**. ThermOx P&IDs and other drawings are also included in **Appendix D**.

Each ThermOx unit is equipped with:

1. A manual process air inlet air valve. This valve controls the vapor influent flow from the SVE system. When this valve is shut off, no vapor from the SVE system can enter the ThermOx unit.
2. An air-inlet dilution valve with in-line blower system. The in-line blower system is designed to induce flow (i.e., under slight vacuum) from the discharge of the SVE system into the ThermOx unit. Also, when the air-inlet dilution valve is opened (located on the inlet to the in-line blower), this induces flow of ambient air into the SVE process flow (thereby adding dilution air to the process stream entering the ThermOx).
3. Combustion air-inlet valve. This is a fully automatic blower system/air inlet that feeds air into the combustion chamber of the ThermOx unit. This valve is not adjustable by the System Operator.
4. Lower Explosive Limit (LEL) meter. An LEL meter is located on the ThermOx inlet of each unit, after the air-inlet dilution valve. This LEL meter is set to shut down the ThermOx at 40% LEL during thermal mode and 25% LEL during catalytic mode. If the LEL meter shuts down the ThermOx, this will signal the entire SVE system to also shut down.

Each ThermOx unit has been designed and built to be in compliance will all applicable National Fire Protection Association (NFPA) codes.

3.5 Instrumentation and Control Interface

3.5.1 Process Instrumentation

The following process instrumentation is included on the system:

Parameter Indicators/Transmitters: These controls provide measurement of various parameters, and transmit these readings (electronically) to the control panel/telemetry system for remote readings.

Flow Indicator, Analog (FIA 401 located on the combined discharge side of the SVE blowers and FIA 2001 on the combined discharge site of the AI blower) – These controls are designed to provide an air flow rate measurement and readout (on a digital or analog meter) in the various process piping systems. These controls also transmit the air flow readings to the control panel/telemetry system for remote readings.

Temperature Indicators, Analog (TIA 901 and TIA 1001 on the discharge side of the AI blower) – These controls are designed to provide a temperature measurement and readout (on a digital or analog meter) in the various process piping systems. These controls also transmit the temperature readings to the control panel/telemetry system for remote readings.

Vacuum Indicators, Analog (VIA 101, VIA 201, and VIA 301 on the SVE blower intake lines) – These controls are designed to provide vacuum measurement and readout (on a digital or analog meter) in the various process piping systems. These controls also transmit the vacuum readings to the control panel/telemetry system for remote readings.

Pressure Switch /Pressure Transducer (PS/PT 401 on the SVE discharge line, PS/PT 701 on the discharge side of the oil water separator transfer pump, and PS/PT 2001 on the discharge side of the AI system) These controls are designed to transmit a pressure reading to the control panel/telemetry system, and also to detect over-pressure conditions (due to pipe blockage or improper valve settings in the process piping), which would trigger a system shutdown.

Flow Totalizer (FT 701) – Analog water totalizer unit to measure total water/condensate discharge from the process. FT 701 is located at the discharge of bag particulate filter BPF 701.

Control/Alarm Sensors and Transmitters: These controls are designed to sense air flow, pressure levels, or liquid levels to trigger equipment responses (such as turning liquid transfer pumps on or off), or indicate alarm conditions (such as high liquid levels in tanks). Alarm conditions triggered by these controls are presented in **Table 3**. The status of these sensors can be observed from the control panel/telemetry system for remote tracking purposes.

Flow Switches (FS 101, FS 201, FS 301 located on the discharge side of the SVE blowers, and FS 901 and FS 1001 on the discharge side of the AI blowers). These are designed to indicate an alarm condition of minimal flow/no flow (due to shutdown of the blowers, break/blockage of the process piping, or improper valve settings). These are flow vane type switches, actuated by the momentum of the air flow within the process piping, and deactivated when the air flow ceases within the respective piping system. These are set with a 30-second delay before arming, to allow the SVE systems to come up to speed when initially started.

Level Transmitters (LT 101 on AMS 101; LT 201 on AMS 201; LT 301 on AMS 303; LT 701 on OWS 701; LT 702 on NAPL Tank 701). These sensors are designed to trigger the transfer pump cycles (on and off), and to sense liquid levels to prevent overfilling of each of the tanks.

Manual Read Instruments/Ports: Miscellaneous air flow meters, vacuum/pressure, and temperature gauges are located along the system manifold, wellheads, and process piping to monitor these operating parameters. In addition, liquid totalizers and sample ports for vapor/liquids are provided in key locations.

Flow Meters (FM) – Direct-read instruments for measuring vapor flow rates at the specific process location.

Hour Meters (HM) – Indicates run time of the associated equipment, and can be used for tracking maintenance schedules or evaluating operational/shutdown time periods.

Pressure Indicators (PI) – Direct-read instruments for measuring pressure at the specific process location.

Sample Ports (SP) – Used to sample liquid or vapor at the specific process location. Some sample ports (such as on the individual wellheads) serve multiple purposes and can be used to measure vacuum or pressures, or can be used to measure wellhead flowrates with portable instrumentation.

Temperature Indicators (TI) – Direct-read instruments for measuring temperature at the specific process location.

Vacuum Indicators (VI) – Direct-read instruments for measuring vacuum at the specific process location.

All instrument specifications are provided in **Appendix C**. The alarm schedule for the applicable instrumentation above is also provided in **Table 3**.

3.5.2 PLC INTERFACE

System operation and responses to instrumentation and alarm conditions is controlled via a PLC interface (Allen-Bradley CompactLogix 1768). Equipment specifications are provided in **Appendix C**. The system interlocks, control schedules, and input/output response table is presented in **Table 3**.

PLC Inputs: The PLC interface accepts inputs from the applicable process instrumentation (described in **Section 3.5.1**). It also accepts electronic outputs integral to several pieces of equipment (such as "on/off" status of the blowers/ThermOx, or thermal overload detection for the blowers or transfer pump electric motors, etc.).

PLC Outputs: The PLC interface provides outputs to trigger a specific response depending on the various input signals (as presented in **Table 3**).

The PLC also communicates system telemetry inputs/outputs to the autodialer and control panel interface/wireless modem (for remote access to equipment/instrumentation parameters).

3.5.3 AUTODIALER

An autodialer system is used to transmit specific system status and alarm conditions to the System Operator and the Project Engineer (per **Table 3**). The autodialer is integrated with the system interface (see **Section 3.5.4**).

3.5.4 System Interface and Wireless Modem Telemetry System

A graphical user interface (GUI) to access system operating statistics and other system features is provided on the main control panel (specifications are provided in **Appendix E**). The GUI is a C-More EA7 Touch Panel unit. The operating instructions/manual for the GUI is provided in **Appendix E**.

A wireless modem (Sierra Wireless Cellular Modem) is connected to the system interface to remotely access system status and view operating parameters. The wireless modem specifications are provided in **Appendix C**.

3.5.5 Heating and Ventilation

A thermostatically controlled ventilation unit with inlet vent and electric exhaust fan is designed to ventilate the equipment shed and maintain temperatures within design limits. A thermostatically controlled heating unit (for cold weather operations) is also provided.

A heat detector/alarm (TSH 801) is also provided in the event that temperatures exceed design parameters within the equipment shed. If the set point is reached inside the shed, the entire system will shut down. Specifications are provided in **Appendix C**.

3.5.6 Outdoor Signal Beacon

An alarm beacon/strobe light is located above the height of the equipment shed, above the control panel location, and is set to activate in the event of any alarm condition.

3.6 Electrical Diagrams

Electrical diagrams for the major system control panels (i.e., ThermOx, equipment shed control panels) are provided in **Appendix F**.

4.0 PRE-STARTUP COMMISSIONING

Prior to full-scale startup of the SVE system, the following activities will be completed:

1. Pre-startup safety review (PSSR) meetings.
2. Complete pre-startup checklists.
3. Startup ThermOx units.
4. System component checks for proper installation/operation.
5. SVE and AI System start-up.
6. Water removal.

4.1 PRE-STARTUP SAFETY REVIEW MEETINGS

PSSR meetings were conducted on January 5 and 13, 2012. The purpose of the meetings is to confirm that the system construction and final installation satisfies the results of the Process Hazard Analysis (PHA) review and PSSR checklist.

4.2 PRE-STARTUP CHECKLISTS

Prior to first-time start-up of the SVE system, the **Pre-Startup Checklists** will be completed. The checklists are provided in **Appendix A**. The checklists are designed to ensure that the systems are properly activated, and any potential for unsafe operating conditions or system damage is eliminated. These checklists may also be used for system re-starts after planned or unplanned shutdown events.

For the pre-start/shakedown activities, the SVE blowers will operate on full dilution air, with no extraction of vapors from the wellfield. In addition, the AI blower will operate on full air-bleed off mode. To configure the system for these conditions, the following valves will be manually operated (per the **Pre-Startup Checklists**):

- The main manifold valve to the wellfield will be closed to prevent any extraction of air/water from the test wells, or injection of air (GV 001).

- The manual dilution valves on the SVE blowers will be fully opened initially (GV 101, 201, and 301).

- AI blower bleed-off valves (GV 901 and GV 1001) will be fully opened initially.

Note that the above valve settings will also be applicable to start-up procedures for the full-scale system operation (see **Section 5.0** of this manual).

4.3 INITIAL STARTUP OF THERMAL OXIDIZER UNITS

Operation of the ThermOx units and the SVE/AI systems are interlocked through the PLC program. The SVE system cannot be started unless the ThermOx units are running. Therefore, the ThermOx units must be started before the SVE system is activated.

Also, the following alarm conditions affect the overall operation of the systems:

- If either of the ThermOx units shut down, a signal is sent to the SVE control panel which turns off the entire SVE system.
- If the SVE system shuts down, a signal is sent to each of the ThermOx control panels, which turns off the ThermOx units as a fuel-saving measure after a one-hour delay.

This operating logic is designed for safety reasons, as well as for maintaining compliance with the air discharge permit for the site (i.e., to prevent untreated vapor discharge to ambient air).

4.3.1 Natural Gas Fuel Supply Leak Test

Prior to operation of each of the ThermOx Units, the natural gas manifold system will be leak-tested under operating pressure. The leak testing will be conducted using a soapy water solution at all manifold pipe connections to verify that there are no leaks.

4.3.2 ThermOx Startup Procedures

The Intellishare Operation & Maintenance Guides for each of the ThermOx units are provided in **Appendix D** (refer to this manual for detailed instructions on system operation). Intellishare will provide on-site training for operation of each of the ThermOx units.

In general, the ThermOx unit start-up procedure is conducted with the SVE system turned off. However, all SVE/AI alarm conditions must be cleared and in ready mode. Should the SVE system be in an alarm condition, the ThermOx control panel will display an alarm condition and will not be able to start.

The main process inlet valve (i.e., controlling the process vapor flow from the SVE system into the ThermOx units) will be fully closed initially. This valve will be locked out by all personnel performing the startup. The air-inlet dilution valve on each of the ThermOx units will be fully open. In this configuration, no air/vapor from the SVE system will enter the ThermOx inlet (i.e., all air will come from the ThermOx air inlet dilution valve).

Start-up of each ThermOx is partially automated, so that after pushing the start/on button on the control panel, the units automatically ramp up to the required set point (approximately 1,500 degrees Fahrenheit [ºF] in thermal mode). Once the required operating temperature is reached, the ThermOx is ready to receive the process air from the SVE system. See **Appendix G** for the permitted operating temperatures.

4.3.3 Operation of the SVE System with the ThermOx Units

Once the ThermOx units are ready, the pre-start testing of the SVE systems can be conducted (see **Section 4.4**). However, the following control logic will affect the subsequent testing procedures:

1. Once a portion of the SVE system is enabled, each ThermOx will receive a signal from the SVE system control panel indicating that the SVE is operating.

2. However, if the SVE system is subsequently shut off (via alarm or via manual shut-down), each ThermOx will then shut down after a four-hour delay. This operating logic is designed for safety, and cannot be overridden by the System Operator.

Refer to **Table 3** for a description of the PLC control logic that controls the interlocks between the ThermOx units and the SVE system.

To begin flow of the SVE system process air into each ThermOx:

1. As previously discussed, during the initial startup of the SVE system, the main valve to the wellfield will be closed (GV 001), and the manual air inlet/dilution air valves on the SVE blowers will be fully open (GV 101, GV 201, and GV 301).
2. Fully open the main process vapor inlet valve on each of the ThermOx inlets (this will allow air from the SVE blowers to enter the ThermOx).
3. Start the SVE blower system(s) to be tested.
4. Slowly close the air dilution valve on the inlet to each ThermOx unit. Once the air-inlet dilution valve on each ThermOx closes, only vapor from the SVE system will be entering the ThermOx inlet. Note that the air-inlet dilution valve on each ThermOx may not need to be fully closed in order to maintain the desired total air flow entering the inlet of the ThermOx.
5. At this point, the SVE systems will be running on full-dilution air, and the ThermOx will be receiving the SVE system discharge. Proceed with the system component checks discussed in **Section 4.4** of this manual.

4.4 System Component Installation/Operation Check

Equipment shakedown will be performed to ensure individual automation and safety controls are fully functional. The equipment shakedown will be performed with the SVE/AI wellfield shut off from the system so that there is no potential discharge during the pre-start testing:

1. The main manifold valve to the wellfield will be closed to prevent any extraction of air/water from the test wells, or injection of air (GV 001).
2. The manual dilution valves on the SVE blowers will be fully opened initially (GV 101, GV 201, and GV 203). These valves will be used to perform some of the later testing operations.
3. AI blower bleed-off valves (GV 901 and GV 1001) will be fully opened initially. This valve will be used to perform some of the later dry testing operations. Be aware that noise and pressure levels produced by operating the AI system with the bleed-off valves open may be high, so exercise proper caution and confirm that personnel working near the outlet on the outside of the equipment shed wear ear plugs, eye protection, and stand clear of the discharge.

The **Pre-Startup Checklists** are provided in **Appendix A**. These checklists cover the operations that are discussed in more detail in the following sections.

4.4.1 MANUAL ELECTRIC MOTOR CHECKS

All system valves will first be confirmed to be in their proper operating positions, per the pre-start checklist. The following equipment will then be manually checked for proper operation:

- SVE/AI blowers will be briefly turned on ("bumped") to confirm proper rotation of electrical motors, using the Hand/Off/Auto (HOA) switch in "manual" position.
- Water/product pumps will be briefly turned on ('bumped") to confirm proper rotation of electrical motors, using the HOA switch in "manual" position.
- Follow the Intellishare Pre-Start Checklist for each of the ThermOx units motor rotation check.

4.4.2 PRESSURE AND VACUUM RELIEF VALVES SETTINGS CHECK

Pressure relief valves will be confirmed to actuate at their proper set-points as follows:

- Start the blower system to be tested (HOA switch in manual mode).
- For the SVE blowers, operation will be confirmed by slowly closing the process air inlet valve* on the ThermOx unit, while observing the pressure at which the pressure relief valves (PRV 101, PRV 201, PRV 301, all set at 2 psig) release.

For the AI blower, operation will be confirmed by slowly closing the bleed-off valves (GV 901, GV 1001) until the pressure relief valves (PRV 901 and PRV 1001) release (set point at 16 psig). Note that PS/PT 2001 will need to be temporarily deactivated in order to achieve this pressure (i.e., since PS/PT 2001 is set to trigger an alarm shutdown at 16 psig).

Vacuum relief valves will be confirmed to actuate at their proper set-points as follows:

- For the SVE blowers, this will be accomplished by slowly closing the ambient air inlet valves (GV 101, GV 201, GV 301), while observing the vacuum at which the vacuum relief valves (VRV 101, VRV 201, VRV 301, set at 16 in. Hg.) release. Low vacuum sensors VIA 101, VI 201 and VIA 301 are set at 2 in. Hg.

PRV and VRV design set-points are also provided on the **Pre-Startup Checklist** (see **Appendix A**). After testing, make any adjustments if necessary. Change of the PRV and VRV design set-points will be guided by Solutia's Management of Change (MOC) process (**Section 6.2**).

4.4.3 THERMOX PRE-STARTUP OPERATION CHECK

Follow the Intellishare pre-startup checklist provided in the Intellishare Operations & Maintenance Guides (**Appendix D)** and Condition 8b of the CAAP permit (**Appendix G**) for all pre-startup safety and operation checks.

4.4.4 SYSTEM AUTOMATION/ALARM CONDITIONS CHECK

Alarm-trigger-response tests will be performed on alarm conditions, automated valve operations, interlocks, control panel operations, telemetry system, and auto-dialer interface controls. The

PLC input/output table (**Table 3**) provides all the alarm conditions. The **Alarm-Trigger-Response Checklist** is presented in **Appendix A**.

This checklist will be completed prior to full system start-up. As previously discussed, as long as the SVE system is running, each of the ThermOx units can remain in operation. This method will reduce the need to perform excessive re-starts of the ThermOx units. Run these tests with each air-inlet dilution valve fully or partially open as needed.

4.4.5 TELEMETRY CHECK

A list of signals/data available for remote telemetry is presented in **Table 3**. A laptop computer with a wireless internet connection (or direct connection to the control panel interface) will be used to log on to the telemetry system during the dry testing to ensure that the telemetry system is transmitting, receiving, and logging all the required signals/data during the shakedown testing. Refer to **Section 3.5.4** for a description of the equipment involved and software requirements to connect to the telemetry system.

4.5 WATER REMOVAL

Upon completion of a successful system shakedown, the SVE and AI system will be ready to be activated for initial water removal. The full SVE startup procedures (discussed in **Section 5.0**) are similar to the procedures discussed in the prior sections.

A significant amount of water and minor amounts of NAPL may be present in some of the SVE wells during the initial system startup. Prior to startup, water/NAPL will be removed from the subsurface using the system as follows:

1. Perform system start-up (per **Section 5.0** of this manual), with SVE blowers on full-dilution air (standard start-up procedures).
2. Begin by selecting half of the SVE wells and open the wellhead valves at these locations.
3. Slowly close the dilution air valves (GV 101, GV 201, and GV 301) until vacuum influences the wells that are turned on.
4. A trial and error process of alternatively opening some SVE wells, while closing others (to induce higher vacuums at the wells head), will then be used to promote water removal at individual wells. Care must be taken not to restrict total system air flow to the point that may trigger shut-down alarm conditions (e.g., low flow alarm [FS 101, FS 201, or FS 301], etc.).
5. Continue this process until all wells are mostly free of water/NAPL, or the water/NAPL extraction rate is at a steady state, with all the SVE wells operating.
6. A log will be completed measuring the total quantity of water/NAPL removed during this phase of the shakedown process.
7. If the NAPL Tank in the Oil Water Separator becomes full during these operations, then follow the NAPL Tank transfer pump operation procedures (**Appendix A**) discussed in **Section 5.5.6** of this manual.

5.0 OPERATIONS

To meet the objective of the 100% Design, the SVE system must operate continuously with minimal interruptions. This section provides the general day to day operation tasks, including process monitoring, general maintenance, and logging/reporting requirements. The technical objectives of the SVE system operation are presented in the 100% Design.

5.1 SYSTEM MONITORING

The general system monitoring events include monthly site visits that will include:

1. Process monitoring.
2. Compliance monitoring.
3. System maintenance checks.

In addition to the monthly site visits, the following tasks will be completed on a quarterly basis:

1. Performance monitoring.
2. System optimization.

Annual performance monitoring will also include soil sampling via direct push methodology for laboratory analyses.

As previously discussed in **Section 2.5** of this manual, system operation summary forms are provided in **Appendix A**. All monitoring forms will be submitted at the end of the month through the duration of the site activities. Portions of these forms will also be completed during non-routine site visits (i.e., when responding to system alarm/system shutdown events).

The schedule and tasks associated with the system monitoring are detailed in **Table 4**.

5.1.1 MONTHLY GENERAL SYSTEM MONITORING

Process monitoring generally includes measurement and recording vacuums, flow rates, vapor concentrations, and temperature data at multiple points within the SVE and AI process streams. This also includes monitoring water/condensate (e.g. totalizer readings [FT 701]), NAPL recovery rates, and the operating parameters of the ThermOx units. Process monitoring data is recorded on the applicable system operation summary forms provided in **Appendix A**. Information collected as a component of the process monitoring will serve multiple uses, including permit compliance review by the IEPA.

This process data is used to evaluate the mechanical performance of the system to ensure that equipment is operating within the manufacturer's specifications, to track system operating conditions, to identify any developing mechanical issues, and for system troubleshooting purposes (troubleshooting is discussed in **Section 8.0** of this manual). Some of this process monitoring data is also used to evaluate the treatment performance of the system (see **Section 5.1.2**).

A **Water Level Monitoring Log** (provided in **Appendix A**) will be used for monthly monitoring of water levels in groundwater monitoring wells in the SVE treatment area (BSA-MW-1S; **Figure 2A**). A set of nested piezometers will be installed in the sandy fill/upper silty sand and

lower silty sand layers at three locations to provide additional water level monitoring data. The OM&M manual will be revised with the location of the piezometers following installation. The water level information will be used to determine the optimal timeframe to focus the SVE system on the deeper treatment interval that may periodically be below the water table.

Compliance monitoring data has a specific purpose to satisfy the air and water discharge permit requirements (copies of the permits are in **Appendix G**). However, some of the compliance monitoring data can be used to assess the remedial performance of portions of the system. Therefore, the performance monitoring and compliance monitoring schedules are integrated together.

Compliance monitoring generally includes:

1. Sampling the SVE system vapor concentrations, primarily to confirm treatment efficiency of the ThermOx units, and ensure air permit compliance.
2. Sampling the LGAC influent/effluent water concentrations, primarily to confirm treatment efficiency of the LGAC units and ensure water discharge permit compliance. XDD will submit the appropriate profiles for effluent waste stream, which may include signature by plant representatives.

Solutia will notify the IEPA within 15 days of a direct (untreated) release to the atmosphere of COCs. The notification will provide the following information for each incident:

1. A description of the incident,
2. The date and duration.
3. At what point in operations the incident occurred (startup, malfunction, breakdown, shutdown, etc.).

Additional deviations from the requirements set by the air (CAAP) permit (**Appendix G**) will be reported quarterly and include the above referenced information.

The compliance sampling schedule, required parameters, and pertinent laboratory information is summarized in **Table 5**.

A **System Maintenance Checklist Form** is provided in **Appendix A**. The general maintenance schedule is provided in **Table 6**. Refer to **Section 7.0** of this manual for a detailed description of the required system maintenance and procedures.

System maintenance includes (but is not limited to):

1. Site safety checks (i.e., condition of eyewash station, fire extinguishers, first aid kit, etc.).
2. General manufacturer's recommended maintenance on blowers/pumps, etc.
3. Physical inspections of all piping, structures, and miscellaneous equipment.

Action items that require system repair or adjustment will be completed through the MOC process described further in **Section 6.2**.

5.1.2 ADDITIONAL QUARTERLY SYSTEM MONITORING

Performance monitoring data is also recorded on the applicable system operation summary forms provided in **Appendix A**. A **Wellfield Monitoring Log** (provided in **Appendix A**) will be used periodically for measuring performance parameters at the SVE/AI wells, and the vapor points.

The overall purpose of the performance monitoring is to assess the remedial performance of the system. For example: removal rates of contaminants, or radius of influence of SVE/AI wells, etc. Some of the process monitoring data will be used in the system performance evaluation. In addition, compliance monitoring data (see **Section 5.1.1**) will also be used in the evaluation of the system performance. Data evaluation using the process/performance monitoring data is discussed in **Section 5.2** of this manual.

Performance monitoring data generally includes:

1. Vapor concentrations in the SVE process (via field PID measurement and/or vapor samples for laboratory analysis).
2. Vapor concentrations, vacuums/pressures, flow rates, temperatures at wellheads and vapor points (to assess subsurface air flow patterns and dynamic contaminant distributions).

5.1.3 ADDITIONAL ANNUAL PERFORMANCE MONITORING

In addition to the quarterly performance monitoring, annual performance monitoring will include the collection of soil samples for laboratory analysis. The SVE system will be shut down and samples collected throughout the treatment area in accordance with the Sampling and Analysis Plan.

The analytical soil results will be used to estimate remedial progress and focus the system on sub-areas that may require further treatment.

5.2 DATA EVALUATION

Process and performance monitoring data will be entered into a database to track trends in the data. The Project Engineer will maintain this database and perform the data evaluation tasks.

Review of this data (with graphical presentation of trends as applicable) will allow evaluation of:

1. Overall contaminant mass removal rates and totals (as vapor, water, and NAPL).
2. Changes in operational parameters of system process equipment (such as increasing or decreasing flowrates, vacuums/pressures, temperatures, etc.) that may indicate changes in the remedial process, or impending maintenance issues.
3. Wellfield performance (including observations of vacuums/pressures and changes in VOCs levels at the wellheads and vapor points).
4. Optimal periods to address deeper soil impacts.

The Project Engineer will recommend on a quarterly basis any additional monitoring to be conducted (for example, if blower temperatures collected during the process monitoring indicates a potential impending maintenance issue). Additionally, the Project Engineer will also determine if reconfiguration of the wellhead flows is necessary to optimize the system performance

5.3 GENERAL RECORDKEEPING

In addition to routine record-keeping related to the process, performance, and compliance monitoring previously discussed, general records keeping will be conducted. General record keeping will include:

1. Records of all personnel, subcontractors, deliveries, or other visitors to the work area.
2. Weather observations.
3. General synopsis of the daily activities including:
    a. Arrival and departure times to the site.
    b. Activities performed while on site (i.e., types of monitoring conducted, maintenance or repair activities, NAPL drum movement, etc.).
4. System operating status (all clear or alarm/faulted conditions on specific pieces of equipment, and approximate downtime).
5. Specific issues identified (i.e., upcoming maintenance required, major changes in operating conditions, etc.) and actions taken (if any)
6. General repair/site maintenance observations (condition of asphalt pad, shed, etc.) and actions taken (if any).
7. Changes in wellfield operating configuration (i.e., rebalanced/optimized flow, changed extraction/injection status on combination SVE/AI wells, etc.). Or, if applicable, indicate that no changes to wellfield operating configuration was made during the site check.
8. Observations of general equipment conditions, wear and tear, or signs of potential failure or damage to the process equipment or piping systems.

Most of the above information may be accounted for in the various system operation checklists/forms provided in this manual, but general record keeping will aid to correlate the data, minimize discrepancies in data forms, and call attention to specific issues as needed.

5.3.1 LOG BOOKS

Field log books will be maintained with the general record keeping notes previously described. Clear copies of the field notes will be made immediately after each field event so if the field log is ever lost, there will be back-up copies. Copies will be made for the file, in addition to electronic copies that will be sent to the Project Engineer.

5.3.2 DATA SUBMITTAL

Copies of the system checklists and monitoring forms completed during each field event, and copies of the field log book notes, and any other paper work (delivery receipts, chains of custody, etc.) will be submitted to the Project Engineer by the Friday after every site visit, for the duration of the project. Copies of the maintenance checklists will also be maintained in a binder to remain in the equipment shed.

5.4 DATA REPORTING

As per the Work Plan, progress reports will be submitted to Solutia and will detail:

- Total mass removed and mass removed for each COC for each month and cumulatively over the operational lifetime of the system.

- Process parameters recorded during Site visits and downloaded via the telemetry system.
- Flow, pressure, vacuum, and field-total VOC measurements collected at the SVE/AI wellheads.
- Laboratory sample results and the associated laboratory and data validation reports.
- Monthly SVE discharge monitoring results.
- Report any system outages and corrective measures taken.
- Scheduled maintenance, reconfiguration, or system optimization events.

5.5 SYSTEM STARTUP/OPERATION PROCEDURES

System start-up procedures are similar to the initial start-up procedures previously discussed in **Section 4.0** of this manual. A **System Startup Checklist** is provided in **Appendix A**.

5.5.1 SVE/AI WELLHEAD CONFIGURATIONS

Configuration of the individual SVE/AI wellheads (i.e., valves open or closed) will control the subsurface air flow patterns.

Since the SVE/AI process equipment has a finite maximum air flow and vacuum (or pressure) capacity, it will be required to restrict flow from some wells in order to increase flow at others (i.e., balancing wellfield flows). Also, each well has the potential to have a different flow vs. vacuum/pressure response behavior, which depends on a number of factors including: well screen length, soil permeability, water table elevations, and soil moisture content in the vicinity of each well. Therefore, balancing or optimizing the wellfield flow requires some compromise between wells in order to achieve the desired configuration.

Initial Startup, Initial Well Configuration: For the purposes of this OM&M Manual, during initial startup of the SVE and AI systems, all SVE/AI wellhead valves will be fully closed, all SVE dilution, and all AI bleed-off valves will be open prior to start-up. This will help to prevent the possibility of starting the blower systems under a "zero flow" condition (which could damage the equipment), or for applying excessive vacuum or pressure at individual wells. Once the SVE and AI systems are operating, individual wells will be slowly opened while the corresponding dilution and bleed off valves are slowly closed. The process will prevent the possibility of overloading the capacity of the Thermal Oxidizers to treat the benzene impacted vapors.

Balancing and Optimizing Well Configurations: After the initial start-up, individual wellhead configurations will be methodically changed with one of the following objectives:

1. Maximize vacuum/flow in wells during the initial water removal phase (see **Section 4.5** of this manual).
2. Evenly balance the SVE/AI extraction or injection rates between wells.
3. Optimize extraction or injection rates at specific SVE/AI wells for the purpose of maximizing system performance (i.e., mass removal rates, etc.). For example, it may be desirable to maximize the extraction rate from a few selected wells, which would be accomplished by reducing the flowrate from the other wells.

System Re-Start Well Configuration: If the system is shut down (either via manual controlled shutdown, or by alarm conditions), and the wellfield configuration has not been changed, the

SVE system may be restarted without the need to readjust the wellhead valve configurations (unless the configuration of the wellhead valves caused an alarm condition, then readjust as necessary).

5.5.2 Avoiding Alarm Conditions When Adjusting SVE/AI Configuration

While modifying wellhead valve configurations, it is important to ensure that the overall SVE process system flow does not trigger the following alarms or mechanical protection devices:

- Low flow conditions (SVE systems) – FS 101, FS 201, and FS 301.
- Low flow conditions (AI system) – FS 901 and FS 1001.
- Vacuum relief valves – VRV 101, VRV 201, and VRV 301.
- Pressure relief valves (AI system) – PRV 901 and PRV 1001.
- Pressure Switch/Transmitter (AI system) – PS/PT 2001.
- LEL (ThermOx System) – AE 1

The above alarm conditions can be triggered by shutting off (or significantly restricting the flow at) too many wells.

In addition, the above alarm conditions may also be triggered by improper settings of the wellfield manifold valves during system start-ups or re-starts, as follows:

1. SVE System: Closing GV 001 during start-up of the SVE system (unless the air-inlet dilution valve GV 101, GV 201, GV 301 are opened).
2. AI System: Closing GV 2001 on the AI System (unless bleed-off valves GV 901 and GV 1001 are opened).
3. SVE Process Inlet Flow to ThermOx System: Closing the SVE process flow inlet valve on the ThermOx unit when starting the SVE system.
4. ThermOx Systems Air-Inlet Dilution Valves: If the SVE process equipment is operating under a low flow condition, the air-inlet dilution valve may need to be opened to provide make-up air flow.

Therefore, be aware of the alarm condition set-points and monitor the SVE/AI process during any changes in wellfield configurations. Dilution air may be added to the SVE system inlets (opening GV 101, GV 201, GV 301), or pressure may be relieved within the AI system (opening air bleed off valves GV 901 and GV 1001) to keep the systems operating within safe limits and avoid potential shutdowns.

In general, ensure that the proper valve settings are engaged prior to starting or restarting, as discussed previously in this section. The SVE system has safeguards (via the flow and pressure switches, and vacuum/pressure relief valves) to protect against inadvertent system overpressures or zero-flow conditions. However, maintaining proper valve settings will avoid these conditions.

5.5.3 ThermOx Startup Procedure

Start up each ThermOx unit per Intellishare's Operation & Maintenance Guide in **Appendix D**.

Also, ensure that the following valves are set properly:

1. Manifold valves to the wellfield will be closed to prevent any extraction of air/water from the wells (GV 001).
2. Manual dilution valves on the SVE blowers will be fully opened (GV 101, GV 201, GV 301).
3. The SVE process inlet valve on each ThermOx unit will be closed.
4. The air-inlet dilution valve on each ThermOx unit will be opened.

5.5.4 SVE System Startup Procedure

The startup procedures for the SVE system are as follows:

1. **Start ThermOx Units**: Start up the ThermOx unit per Intellishare's Operation & Maintenance Guide in **Appendix D**. The ThermOx unit will always be started with the SVE process inlet valve closed and the air-inlet dilution valve fully open.
2. **Isolate SVE Wellfield from Process**: Close the main manifold valve (GV 001) for the wellfield to prevent any extraction of air/water from the wells during the startup process.
3. **Open SVE Blower Dilution Valves**: Open the manual dilution valves on the SVE blowers (GV 101, GV 201, and GV 301).
4. **Prepare the ThermOx Units to Receive SVE Process Flow**: Open the SVE process inlet valve on the ThermOx units.
5. **Start the SVE Blowers**: Use the HOA switch in "Auto" mode to start the SVE blowers. The SVE blowers will still be on full dilution air.
6. **Confirm Wellhead Valve Configuration**: See **Section 5.5.1** for proper valve settings for the individual SVE wells. For initial startup, SVE wellhead valves will all be fully open for the initial wellfield balancing process. Re-starts may be conducted, as needed, without reconfiguring the wellfield valve settings. This is because the wellheads will have been already configured to operate in a tested and/or balanced operating configuration.
7. **Close Air-Inlet Dilution Valve on the ThermOx Units**: Slowly close the air-inlet dilution valve per Intellishare's Operation & Maintenance Guide in **Appendix D.** The ThermOx units will now be receiving the SVE process flow. However, the SVE process flow is still operating on full dilution air (per Step 3 above). It may not be possible to fully close the air-inlet dilution valve on the ThermOx unit (depending on the configuration of the SVE systems). Ensure that the SVE process is operating within the flow/vacuum/pressure conditions to avoid triggering an alarm shutdown, per **Section 5.5.2**.
8. **Open Main SVE Manifold Valves**: Slowly open the main SVE valve (GV 001) controlling the wellfield to begin extraction from the system.
9. **Close SVE Blower Dilution Valves**: Slowly close the air-inlet dilution valves on the SVE systems (GV 101, GV 201, and GV 301). This step will allow contaminant vapors to begin entering the ThermOx unit. The process flow from the SVE system will be gradually increased by closing the SVE system air-inlet dilution valves (GV 101, GV 201, and GV 301) in increments. Monitor the ThermOx operating conditions closely during this process per Intellishare's Operation & Maintenance Guide in **Appendix D**.

After following these steps, the SVE system and ThermOx unit(s) will be on-line. Changes in wellfield configurations may be made at this time, following the protocols discussed in **Section 5.5.2** "Avoiding Alarm Conditions When Adjusting SVE/AI Configuration".

5.5.5 AI Startup Procedure

The startup procedure of the AI system is as follows:

1. Fully open the AI blower bleed-off valves (GV 901 and GV 1001).
2. Ensure that wellfield inlet valve, GV 2001, is fully opened.
3. Ensure that all AI wellhead valves to be operated are fully opened (for initial startup only; for restarts, valves settings may remain unchanged unless the wellhead valves setting caused a system shutdown and require modification. Refer to **Section 5.5.2**).
4. Use the HOA switch in "Auto" mode to start the AI blower.
5. Slowly close the bleed-off valves (GV 901 and GV 1001) to begin injection air into the wellfield.
6. Adjust wellfield inlet valve (GV 2001) as needed to achieve the desired total injection rate/pressure to the manifold.

After following these steps, the AI system will be on-line. Changes in wellfield configurations may be made at this time, following the protocols discussed in **Section 5.5.2** "Avoiding Alarm Conditions When Adjusting SVE/AI Configuration".

5.5.6 NAPL Transfer Pump Operation Procedures

The high-level sensor (LS 705) will send an autodialer signal that the NAPL Tank within the Oil Water Separator is approximately 75% full and needs to be drained. The high-high level sensor (LS 704) will detect that the NAPL Tank has reached its full capacity and will trigger a full shut-down of the SVE/AI systems.

One NAPL storage drum will be placed on the secondary containment pallet. Remove the protective rain cover from the drums (designed to keep rain water from accumulating within the secondary containment unit) prior to proceeding with the below steps. Note that Level C respiratory protection is mandatory when connecting or disconnecting the NAPL transfer hose/vent line, and opening the drum bungs. This requirement is specified in the **NAPL Transfer Pump Operation Procedure Checklist** in **Appendix A**.

When the NAPL Tank (within OWS 701) needs to be drained, the following procedures will be followed (also refer to the **NAPL Transfer Pump Operation Procedure Checklist** in **Appendix A**):

Prepare the NAPL Storage Drum and Transfer Hose for NAPL Transfer:

1. When filling a new NAPL storage drum, the drum must first be prepared for use (note Level C respiratory protection is not needed when preparing a new, clean drum for use):
    a. Remove the inlet bung on the NAPL storage drum.
    b. Attach the cam-lock and ball valve assembly to the inlet bung via the threaded connections. The threaded connections will be of all steel construction. Use Teflon tape and ensure that a leak-free threaded seal is established.

   c. This assembly will remain attached to the NAPL drum until the drum is filled and ready to be transferred to the designated accumulation area.
   d. The cam-lock/ball valve assembly will be fully closed at all times unless actively filling the drum.
2. Ready the chemical-compatible hose system (Transfer Hose) and inspect it for potential leaks or signs of wear (cracking, checking, discoloration, etc.). The Transfer Hose is equipped on both ends with ball valves and cam-lock fittings.
3. NOTE: The Transfer Hose system will only be connected to the NAPL drum during the actual NAPL transfer.
4. Connect one end of the Transfer Hose system to the 1-inch galvanized steel discharge pipe from the NAPL product pump (TP 702). The outlet of the discharge pipe is located to the right of the equipment shed personnel door, and passes through the shed wall. The outlet will be equipped with a cam-lock fitting (Teflon taped threads to ensure a leak-free seal).
5. Connect the other end of the Transfer Hose system to the cam-lock fitting assembly that is connected to the NAPL storage drum inlet. Ensure that the weight of the hose connection does not apply excessive strain to the fitting assembly on the drum inlet.

Connect the NAPL Storage Drum Ventilation System:

1. Remove the vent bung of the NAPL storage drum.
2. The drum will be vented (using the vent bung opening) using a flexible piping system connected to a carbon filter vent unit (refer to **Section 3.4.2**).
3. Connect the vent bung cam-lock fitting assembly to the NAPL storage drum. Use Teflon tape to create a leak-free, positive seal with the drum.
4. Connect the flexible vent piping system to the carbon vent unit. The NAPL storage drum will be vented in common with the vent for the Oil Water Separator unit. A tee fitting with cam-lock fitting assembly will be provided on the manifold for the carbon filter vent unit.

Prepare the NAPL Tank/Product Pump Valves for Transfer:

1. Confirm that the chemical transfer hose fittings are fully engaged on both ends.
2. Ensure the following process valves are fully opened:
   a. BV 722 and BV 723 (outlet valves of NAPL Tank/inlet isolation valve on TP 702).
   b. BV 725 (outlet isolation valve for TP 702).
   c. BV 725 (final outlet valve for the discharge pipe prior to penetrating the shed wall).

The system is now ready to begin the NAPL transfer.

IMPORTANT: Before transferring NAPL to the NAPL storage drum:

1. The NAPL Tank in the Oil Water Separator has a maximum capacity of 14 gallons.
2. BEFORE turning on the NAPL product pump (TP 702) ensure that there is sufficient capacity in the NAPL storage drum to receive the NAPL. The 55-gallon NAPL storage drum will have a maximum useable capacity of approximately 50 gallons. A NAPL accumulation log will be kept with each drum to aid in this determination.
3. Gauge the product level in the NAPL storage drum (use the vent bung opening).
4. Use extreme caution to avoid overfilling the NAPL storage drum. Leave at least 3-inches of unfilled head space within the drum (for thermal expansion).

Begin NAPL Product Transfer:

1. Use the "Hand/Off" (HO) switch in manual or "Hand-Operated" mode to operate the product pump.
2. There is no automatic shut off for TP 702, so listen to the pump for signs of the pump running dry.
3. When the NAPL tank is drained/pump begins to run dry, immediately turn off TP 702.
4. Open BV 729 to break the vacuum seal within the line.
5. Close BV 722, BV 723, BV 724, BV 725, and BV 726.

Disconnect the Transfer Hose:

1. Allow the Transfer Hose to fully drain into the NAPL storage drum.
2. Close the ball valve, and disengage the cam-lock on the inlet end of the Transfer Hose.
3. Close the ball valve on the NAPL storage drum.
4. Close the ball valve, and disengage the cam-lock on the outlet end of the Transfer Hose.

Disconnect the NAPL Storage Drum Ventilation System:

1. Close the ball valves located on each end of the ventilation hose.
2. Disconnect the flexible vent piping system using the cam-lock fittings.

The NAPL transfer process is complete. Log the amount of product transferred (on the **Water/NAPL Monitoring Log**, **Appendix A**), and replace the protective rain cover over the NAPL storage drum and secondary containment unit.

5.5.7 NAPL Drum Change-Out/Movement Procedures

After the NAPL storage drum is full (50 gallons or 3-inches head space remaining in the drum), the drum will be sealed, labeled, and moved to the designated hazardous waste accumulation area. Product characterization and disposal will be the responsibility of Solutia.

A new drum will be obtained from Solutia, visually inspected, and prepared for initial use as discussed in **Section 5.5.6**.

5.6 SHUTDOWN PROCEDURES

Normal shutdown of the SVE system is conducted as follows (refer to the **System Shutdown Procedures** provided in **Appendix A**):

1. Prior to shutting down the SVE system(s), slowly open the air-inlet dilution valve on the ThermOx units to prevent a low flow condition. The air-inlet dilution valve may only need to be opened enough to compensate for the anticipated reduction in total flow when the SVE blower(s) are shut off. If only the AI system is being shut off, then this step is not required.
2. Shut off the SVE/AI process equipment by using the associated HOA switches for the equipment being turned off. Be aware that shutdown will change the air flow and vacuum/pressure within the process, which may affect the operating status of the ThermOx units (refer to Step 1 above).
3. In controlled shutdown conditions, the ThermOx will typically be the last piece of equipment to shut off. To shut down the ThermOx, refer to the Intellishare Operation & Maintenance Guide in **Appendix D**.
4. All manual valves that are left unattended after being placed in a position other than the normal operating position for that specific valve will be tagged and remain tagged until the valve is returned to its normal position.
5. If the system will be off for an extended period, also shut off the main water discharge line from the process equipment (BV 701).

Final decommissioning of the SVE will be conducted in accordance with the shutdown protocol as presented in **Appendix H**.

5.7 EMERGENCY SHUTDOWN POLICY AND PROCEDURES

The SVE system was designed with safeguards to prevent dangerous situations or catastrophic failures of the equipment (such as vacuum/pressure relief valves, thermal protection, liquid level sensors to prevent overfilling of tanks, etc.). However, in the unlikely event that these safeguards do not function properly, or emergency conditions arise, the SVE/AI and related systems can be shut down manually. Some of the potential emergency conditions are:

1. Personnel health and safety emergency.
2. Imminent equipment failures observed through process monitoring (i.e., high temperature, etc.)
3. Fire.
4. Leaks in process piping (water or air lines), or failure of pipes.
5. Vapor accumulation within the equipment shed (LEL conditions and/or unacceptable contaminant exposure levels).
6. Overfilling/overtopping Oil Water Separator/NAPL tanks, Air Moisture Separators, etc. in the unlikely event that level sensors fail to trigger a shutdown.

The following sections describe the emergency shutdown procedures for critical process equipment. If the system requires a shutdown for emergency conditions, the appropriate information will be to be communicated to plant emergency personnel (**Table 1**). Refer to the **Emergency Shutdown Procedures** provided in **Appendix A**.

5.7.1 THERMOX EMERGENCY SHUTDOWN

An emergency shut-down is conducted by pressing the SYSTEM STOP button on each of the ThermOx Control Panels or any of the emergency stop buttons on the SVE system. If safe to do so, also close the supply valve for the propane fuel source. Refer to Intellishare's Operation & Maintenance Guide in **Appendix D** for additional information on system shutdown procedures.

5.7.2 SVE/AI EMERGENCY SHUTDOWN

Shutting off the SVE system in an emergency is accomplished by pressing the EMERGENCY STOP buttons located inside the equipment shed and on the control panel located on the outside of the equipment shed.

Shutting off the SVE/AI will automatically send a control signal to shut off the ThermOx unit. Close the natural gas fuel inlet valve on the ThermOx units.

5.7.3 NATURAL GAS SHUTOFF

If a leak is detected, and only if safe to do so, close the main supply valve. The ThermOx units will automatically detect that the natural gas fuel supply is shut off, and will shut down automatically. This will also trigger an automatic shutdown of the SVE system.

5.8 POLICY REGARDING OVERRIDING SYSTEM ALARMS AND INTERLOCKS

The SVE system was designed with instrumentation and mechanical safeguards to prevent damage to the equipment, potential vapor/liquid releases, or unsafe conditions, in the event that a component of the system fails.

In general, the system protection controls (including, but not limited to liquid level sensors, flow switches, pressure/vacuum sensors, LEL meter, PLC interlocks between the process equipment, etc.) will not be overridden by any means.

The only time that system alarms or interlocks may be overridden is during the initial pre-start shakedown operations (where alarms and interlocks are tested to confirm they are fully operational). Troubleshooting operations may require a temporary override of system controls/interlocks, which will be guided by the MOC process described further in **Section 6.2**.

6.0 SAFETY

6.1 OVERVIEW

This section of the OM&M Manual describes specific safe working practices presented in the Site Health and Safety Plan (HASP). XDD and any other personnel performing work on the SVE system will read and sign the HASP prior to accessing the treatment area.

Some of the basic health and safety precautions are:

1. **General Personal Protective Equipment (PPE)**: Protective safety gear must be worn during general operation and maintenance of the system. The required general safety gear is as follows:
    a. Safety glasses with side shields.
    b. Hearing protection (as required when noise levels exceed 85 dBA, and at all times when working inside the equipment shed and near the ThermOx).
    c. Work clothes, consisting of long pants and a long-sleeve work shirt.
    d. Steel-toed shoes.
    e. Gloves (as appropriate per task).
2. **Electrical Service**: Power service to the control panel is 460 volts. If electrical service is required, a qualified electrician will perform all electrical repairs. The power supply to the equipment will be disconnected prior to service, maintenance, or inspection. Lock-Out/Tag-Out procedures will be followed per **Section 6.10** of this manual and the site HASP.
3. **Mechanical Service**: If mechanical service is required (i.e., repairing pump seals, changing out filters, etc.), the Lock-Out/Tag-Out procedures will be followed per **Section 6.10** of this manual and the site HASP. Prior to re-energizing the SVE system, The appropriate Pre-Startup Checklist (**Appendix A**) will be completed by the field personnel.
4. **General Precautions**:
    a. Protective covers/equipment guards will never be removed while equipment is operational. All guards will be replaced prior to equipment being restarted.
    b. Body parts, loose clothing, hair, and foreign objects must be kept away from contact with moving parts.
    c. High noise levels and temperatures will be present within the equipment shed. Use proper PPE and caution when touching pipes or equipment.
5. **Contaminant Exposure Prevention**:
    a. Vapor Exposures: Since the COCs are volatile, the major potential exposure route is through inhalation. In general, when the potential for exposure to vapors exists, breathing zone air monitoring will be conducted using a photoionization detector (PID). The specific hazards associated with contaminant vapors, and additional safety procedures to avoid potential exposures, are detailed in the HASP. Refer to **Section 6.4** of this manual for specific procedures that are designed to prevent potential exposure to contaminant vapors.
    b. Liquid Exposures: COCs will be dissolved in the groundwater/condensate, and will also be present as a liquid product. When repairing or performing maintenance on system components in contact with the general water/liquid

process, additional PPE will be required. The specific hazards associated with liquid-phase contaminants, and additional safety procedures to avoid potential exposures, are detailed in the HASP. Additional PPE will be required, including chemical splash goggles and chemical-resistant gloves, for operations that may result in direct exposure to liquids.

6.2 MANAGEMENT OF CHANGE (MOC) PROCESS FOR THE SVE SYSTEM

Alterations or modifications to technology, equipment, procedures, or materials outside approved limits are considered changes and require a MOC process. Changes that do not require change management following this procedure include:

1. "Like for like" replacements/"replacements in kind",
2. Changes that do not affect the process, its equipment, or its personnel responsibilities and
3. Changes inside documented, approved Safe Operating Limits. Examples include:
    a. Tuning changes
    b. Temperature set points

During the operation of the SVE system, XDD will be following the Solutia Standard Procedure for MOC (ESH 504), with the exception of procedures associated with the exception of "process recipe" changes, which are not applicable.

At a minimum the personnel associated with the MOC process are as follows:

Title:	**Personnel:**	**Company:**
"Department Supervisor"	William Johnson	Solutia Inc.
"Department Engineer"	Dennis Keane	XDD, LLC
"First Line Supervisor"	Erin Stanisewski	XDD, LLC
Safety and Health	Brett Shank/Tom Gartzke	Solutia Inc.

Contact information for the personnel involved in the MOC is presented in **Table 1**.

6.3 CONTAMINANTS OF CONCERN

The primary COCs are VOCs. Benzene represents the majority of the contamination, and has been measured at up to 42,000 milligrams per kilogram (mg/kg or ppm) in the soil. Additional COCs include chlorobenzene, ethylbenzene, xylenes, and toluene. All of these compounds have relatively high vapor pressures, and are amenable to removal using the SVE process. Dichlorobenzenes have been detected, but at lower soil concentrations (up to 10 mg/kg or ppm). The vapor pressures of dichlorobenzenes are approximately an order of magnitude lower than that of chlorobenzene, which makes them amenable to SVE, but at a much lower removal rate. Refer to the Site HASP for detailed information regarding the COCs at the site.

6.4 PHOTOIONIZATION DETECTOR AND CALIBRATION

A PID will be used for air/vapor monitoring. The PID will be calibrated to isobutylene gas. The sensitivity of the PID varies depending on the actual gas that is being sampled. For example, the actual PID response to benzene is approximately twice as sensitive as it is for isobutylene. As a

result, when measuring benzene vapor concentrations using a PID which has been calibrated to isobutylene, the output reading on the instrument will be approximately two times the actual benzene reading.

Therefore, the PID measurement can be adjusted by an appropriate compound-specific Response Factor (RF). The compound-specific RF is multiplied by the PID output reading to determine the equivalent concentration for that specific compound.

Note that the PID is a non-selective instrument, and measures the total response of all the detectable compounds within an air or vapor sample. Since the actual air/vapor sample may be composed of several compounds, a single compound-specific RF may not always provide a completely accurate conversion. However, since benzene is the primary compound at this site, and the other compounds detected in the area have similar response factors, conversion of the field PID readings using the benzene response factor should be acceptable.

BENZENE RESPONSE FACTOR: Since benzene is the primary COC in the treatment area, in general, a **Response Factor of 0.53 (RF = 0.53)** can be used for interpreting field PID readings. For quick assessment purposes, the PID reading will be approximately twice as high as the actual vapor concentrations being measured (assuming they are comprised primarily of benzene).

6.4.1 PID Instrument Specification

A PID equipped with a 10.6 electron volt (eV) lamp will be used for air monitoring. For the purposes of this OM&M Manual, it was assumed that a Rae Systems miniRAE PID will be used (although other models are acceptable). Refer to the calibration procedures provided by the specific manufacturer of the PID being used. Be aware that the response factors for instruments by another manufacturer may be different than listed in this manual. Obtain and use the proper response factors if using another manufacturer/model PID.

6.4.2 Interpretation of PID Readings for Health and Safety Purposes

For general health and safety monitoring purposes, the direct read output of the PID will be used for action level responses. Do not apply the compound-specific response factor to the PID reading. This will provide a safety factor of approximately two for air monitoring operations.

The appropriate PID response factor (as discussed above in this section) will be applied to the PID readings for interpreting actual performance of the system (i.e., mass removal rates, inlet/outlet vapor concentrations of the process, etc.).

6.5 Specific Safety Procedures

6.5.1 Equipment Shed Pre-Entry Observations

Before entering the equipment shed (either through the personnel door, or through the maintenance doors), perform the following procedures:

1. Observe any unusual noises (i.e., unusual mechanical noise, actuation of PRV or VRV release valves, etc.), or other indications of potential safety issues (such as smoke, excessive heat, liquid leaks around the doors, or unusual odors). Depending on the

conditions, either shut the system down, or exercise proper precautions when opening the shed doors.

2. If the system was shut down due to an alarm condition, assess the nature of the alarm prior to entering.
3. If there is no power to the Site or a malfunction associated with the LEL reading on the control panel, collect a vapor reading from the port adjacent to the personnel door using a handheld PID and compare against applicable LEL levels (**Section 6.5.2**) prior to entering the equipment shed.

6.5.2 LEL MONITORING

Equipment Shed: Prior to entering the equipment shed, the LEL value of the system will be checked at the control panel. If readings at LEL 701 at the control panel approach 10% of the LEL, or approach concentrations that are Immediately Dangerous to Life and Health (IDLH) conditions, DO NOT enter the equipment shed. If safe to do so, immediately shut the equipment down. Also, shut off the main power disconnect at the main power panel. If conditions are 10% LEL or higher, notify W.G. Krummrich Emergency Response/Security of the situation. Otherwise, allow the vapors to dissipate and notify Project Engineer. In the event of a power outage, a sample port on the side of the shed and a handheld PID will be used to evaluate the interior relative to the LEL.

LEL and IDLH Conditions for Site COCs

Compound	10% LEL; Conc. (ppmv).	IDLH	PID Response Factor (RF)*
Benzene	1.2%; 1,200 ppmv	500 ppmv	0.53
Chlorobenzene	1.3%; 1,300 ppmv	1,000 ppmv	0.40
Dichlorobenzene	2.5%; 2,500 ppmv	150 ppmv	0.47
Ethylbenzene	0.8%; 800 ppmv	800 ppmv	0.52
Toluene	1.1%; 1,100 ppmv	500 ppmv	0.50
Xylenes	0.9 to 1.1%; 900 to 1,100 ppmv	900 ppmv	0.39 to 0.46

Notes:
LEL/IDLH Data Source: http://www.cdc.gov/niosh/npg/npgsyn-a.html
PID Response Factors based on RAE Systems, MiniRAE PID calibrated to isobutylene gas, using 10.6 electron volt (eV) lamp. http://www.raesystems.com/~raedocs/App_Tech_Notes/Tech_Notes/TN-106_Correction_Factors.pdf
10% LEL/Conc. = (concentration representing 10% of the Lower Explosive Limit of the compound, and the equivalent concentration in ppmv). These concentrations are unadjusted for the PID response factors.
IDLH = Immediately Dangerous to Life and Health conc. (based on LEL or health effects, whichever is lower).

Process LEL Monitoring: Each of the ThermOx units are equipped with an inlet LEL meter which is set at 40% of the LEL for benzene (4.8%; 4,800 ppmv) in thermal mode. If the process vapor exceeds 40% LEL in thermal mode for benzene, the ThermOx units will shut down, followed by shutdown of the SVE system. In catalytic mode the LEL meter will be set to 25% of the LEL for benzene. Refer to the ThermOx manuals located in **Appendix D**.

6.6 PROCESS AND EQUIPMENT SAFETY CHECKLISTS

The process and equipment safety checklists are incorporated into the appropriate system operation summary forms, and **System Maintenance Checklists**, in **Appendix A**.

6.7 SITE SAFETY AND SECURITY

During system operations, the System Operator (and other project personnel as needed) will check in with the Krummrich Security desk upon arrival to the site, mid-shift (approximately 12:00-1:00 p.m.), and upon exit at the end of the activities.

EMERGENCY COMMUNICATION: A two-way radio with an emergency "man-down" call button will be supplied by the facility. In the event of a serious accident or other medical emergency, use of this feature will provide and expedited response from Krummrich Emergency Response/Security.

6.8 EMERGENCY EVACUATION PROCEDURES

In the event of an emergency, shut down the SVE system per the emergency shutdown procedures in **Section 5.7**. If necessary, call for medical or rescue assistance as soon as possible.

1. Treatment Area Emergency: In the event of fire or natural gas leaks, exit the treatment area using the safest route (i.e., away from danger). Notify Krummrich Emergency Response/Security of the nature of the emergency.
2. Plant-Wide Emergency: In the event of a plant wide emergency, proceed to the designated muster point (if safe to do so).

ASSEMBLY POINT: The designated assembly point for a plant-wide emergency is the **ACL Control Room**, located northeast of the treatment area. If a plant-wide emergency occurs when in another location within the facility, the closest control room may be used.

6.9 EMERGENCY EYEWASH STATION

An emergency eyewash station will be mounted inside the personnel door of the equipment shed to allow unimpeded access. In the event that the eyewash must be used, use the "man-down" button on the two-way radio to call for aid. The eyewash station will be checked during every site visit to ensure the saline level is full and that the saline solution is not expired (refer to **System Maintenance Checklist**, **Appendix A**).

6.10 LOCK-OUT/TAG-OUT PROCEDURES

All maintenance and repair activities will be conducted using the appropriate Lock-Out/Tag-Out procedures, as applicable, and according to the Site HASP (refer to **Appendix A** of the Operations, Maintenance and Monitoring Addendum of the Site HASP).

6.11 FIRE EXTINGUISHERS AND FIRST AID KITS

Multipurpose fire extinguishers (for Class A, B, C, and D fires) will be maintained within the equipment shed and carried on personnel vehicles at all times. These extinguishers will be capable of extinguishing ordinary combustibles, flammable liquids and gases, and electrical equipment fires. Two 2A-20BC fire extinguishers will be maintained (one inside the equipment shed and one mounted on the power pole closest to the Main Power Panel). Fire extinguishers will be inspected on a monthly basis.

A first aid kit will also be maintained within the equipment shed and will be inspected on a monthly basis to ensure the contents are current.

Fire Extinguisher/First Aid Kit Inspection Logs (reproduced from the Site HASP) are provided in **Appendix A** of this OM&M Manual.

7.0 MAINTENANCE

7.1 OVERVIEW

The **System Maintenance Checklist** is provided in **Appendix A**. The general maintenance schedule is provided on **Table 6**. The maintenance program includes physical inspections of the system piping, general system maintenance, handling NAPL drums, and replenishing of expendables (e.g. filters).

7.2 PHYSICAL INSPECTIONS AND GENERAL MAINTENANCE

Maintenance of the SVE system will include physical inspections of the process piping, equipment components located in the system shed, and external equipment.

The physical inspections will include:

1. Inspection of the physical integrity of the wells and wellheads.
2. Inspection of the physical integrity of the interior and exterior piping and manifolds.
3. Inspection of the physical integrity of vessels.
4. Inspection of relief devices.
5. Inspection of rotating equipment.
6. Inspection of the physical integrity of the ThermOx stack(s).
7. Identification of visible leaks of water or oil from equipment.
8. Measurement of total VOC concentrations within the equipment shed (via LEL 701), indicating a potential leak inside the shed.
9. Signs of piping degradation (via chemical reaction, corrosion, or heat related stresses).
10. Monitoring of heat/temperature within the equipment shed.

In addition to the physical inspections above, general system maintenance includes (but is not limited to):

1. Site safety checks (i.e., condition of eyewash station, fire extinguishers, first aid kit, etc.).
2. General manufacturer's recommended maintenance on blowers/pumps, etc.

The above inspection items are included on the **System Maintenance Checklist** (**Appendix A**). Copies of these forms will be kept up to date and stored in a dedicated binder within the system shed. Copies of this form will also be submitted to the Project Engineer per **Section 2.5** and 5.3.2 of this manual.

7.2.1 PROCEDURES FOR BREAKING INTO PIPING AND EQUIPMENT

In the event that process air/vapor or liquid piping needs to be disassembled or cut into for repairs, or equipment needs to be accessed, the following procedures will be used. (These procedures do not apply to routine connection/disconnection of flexible process piping or other transfer hoses). In all instances, breaking into piping and equipment will require a controlled system shutdown (**Appendix A**) and that appropriate Lock-Out/Tag-Out procedures presented in the HASP are followed.

Air/Vapor Process:

Wellfield Manifolds: If breaking into wellfield manifolds, first open the cleanout fittings at the terminus of each of the manifold lines to be repaired by removing the threaded plug. Next, close all wellhead valves connected to the manifold that is being repaired. Allow fresh air to flush vapors from the manifolds for several minutes. Monitor the vapor concentrations in the manifold line using a PID until concentrations are less than 1 ppmv (measured at the appropriate sampling ports SP 101, SP 201, and SP 301). Shut down the system being repaired, and use appropriate Lock-Out/Tag-Out procedures prior to conducting pipe repair operations.

Process Equipment in the Equipment Shed: If breaking into process equipment downstream of air-inlet dilution valves on the SVE system (i.e., downstream of GV 101, GV 201, and/or GV 301), first open the appropriate air-inlet dilution valve of the system being repaired. Next, close the main valve for the wellfield (GV 001), as appropriate. Operate the blower(s) for several minutes to allow fresh air to flush through the process equipment/piping. Monitor the vapor concentrations in the line using a PID until concentrations are less than 1 ppmv (measured at the appropriate sampling ports SP 102, SP 202, and/or SP 302). Shut down the system being repaired, and use appropriate Lock-Out/Tag-Out procedures prior to conducting pipe repair operations.

Water/NAPL Process: It is highly unlikely that water process piping will need servicing since all water piping inside the equipment shed is made of steel. The only items that may require periodic service are:

1. Transfer pumps (TP 101, TP 201, TP 301, TP 701, TP 702). Transfer pumps will have union fittings and isolation valves upstream and downstream of the pumps to allow maintenance.
2. Bag Particulate Filter (BPF 701). BPF is equipped with isolation valves upstream and downstream of the filter housing to allow maintenance. A manual drain valve is also located on BPF 701.
3. Level Transmitters (LT 101, LT 201, LT 301, LT 701, and LS 702). These are accessed through a removable cap on the air moisture separators, with the exception of LT 702 in the NAPL Tank, which are accessible from the inside of the tank.
4. Flow Totalizers (FT 701).

To conduct maintenance on the above items:

1. Shut off the SVE system and follow proper Lock-Out/Tag-Out procedures.
2. Isolate the pump/equipment with the nearest upstream and downstream valves.
3. Drain equipment of free liquids using available drain ports. Capture liquids in compatible buckets. During these processes, monitor breathing zone with a PID and use the air monitoring action levels in the HASP (note that the action levels are also presented in **Section 6.5.2** of this manual). Water will be temporarily drummed during maintenance, and added back into the system either upstream of the oil water separator or into the air moisture separator once the system has been repaired. NAPL liquids may be disposed of in the NAPL Storage Drum.

Procedures for specific equipment:

- The Oil Water Separator can be manually drained using its transfer pump (TP 701), or if necessary, using the manual drain valve (MD 701).
- The Air Moisture separators can be drained manually using their respective transfer pumps (TP 101, TP 201, and TP 301). After liquids are removed, the level sensors can be removed from the Air Moisture Separators by removing the level sensor assembly fittings located at the top of the site tubes.
- The Bag Particulate Filter can be manually drained using its manual drain valve.
- The NAPL Tank (in OWS 701) can be drained using its transfer pump (TP 702). Completely drain the NAPL Tank prior to accessing the interior of OWS 701.

After conducting the required maintenance, ensure that all valves are returned to their proper operating status before restarting the system.

7.3 EQUIPMENT MAINTENANCE

Maintenance of equipment components will be conducted according to manufacturer's guidelines or when system performance dictates (e.g., decrease in pump performance below the design criteria indicating impending pump failure, leaks, etc.).

In general, the equipment listed in the following subsections will require routine maintenance and/or routine checking to ensure that the equipment is maintained in good working order. Other equipment not listed below, such as the transfer pumps, the oil-water separator, instrumentation, etc., will typically not require any specific maintenance unless there is a fault (such as a seal failure, etc.). These will be dealt with on an as-needed basis.

Process monitoring data trends (as applicable) and physical inspections will be used to identify and impending maintenance issues for all equipment not specifically listed below.

The general maintenance and inspection items are included on the **System Maintenance Checklist** (**Appendix A**). Specific maintenance procedures for major equipment are discussed in the following sections.

In all instances, equipment maintenance will require a controlled system shutdown (**Appendix A**) and that appropriate HASP procedures (Lock-Out/Tag-Out and respiratory protection) are followed.

7.3.1 SVE AND AI BLOWER MAINTENANCE

The manufacturer's recommended maintenance schedules for the SVE/AI blowers are provided in **Appendix C**. The following equipment is included:

1. SVE Blowers (PDB 101, PDB 201, PDB 301).
2. Air Injection Blowers (AC 901 and AC 1001).

Used oil will be disposed of in either the west shop or in the ACL maintenance building located on the grounds of the facility.

7.3.2 THERMOX MAINTENANCE

Refer to Intellishare's Operation & Maintenance Guide in **Appendix D** for the maintenance requirements of the ThermOx units.

The operational parameters will be downloaded on a monthly basis. The calibration of the LEL meter on the inlet to the ThermOx will also be checked on a monthly basis.

7.3.3 AIR PARTICULATE FILTERS

Replacement of the elements within the Air Particulate Filters (APF 101, APF 201, and APF 301) is indicated by excessive head losses across the filter housings (indicated by the vacuum gauge readings upstream and downstream of the filters). Refer to the manufacturers specifications in **Appendix C** for maintenance information.

7.3.4 LIQUID GRANULAR ACTIVATED CARBON MAINTENANCE

Moisture generated by the SVE system will be treated via two 500 lb activated carbon units (LGAC 701 and LGAC 702) and discharged to the Plant sewer system under permit. Monthly monitoring will consist of laboratory testing of water samples collected from ports located before and after carbon treatment vessels LGAC 701 and LGAC 702, at the beginning of each calendar month. Water samples will be collected and submitted to an off-site laboratory for analysis via USEPA Method 8260B. The sample results will be used to verify compliance with the site water discharge permit and to determine if the activated carbon has become saturated with respect to any of the COCs presented in **Section 2.0**.

If the activated carbon becomes saturated with a COC, the spent media in the first vessel will be replaced and sent off-site by Solutia Inc., for either regeneration or disposal. Replacement of the activated carbon will consist of implementing a controlled shutdown of the SVE and ThermOx units. The activated carbon will be removed by a dedicated vacuum truck for disposal or regeneration by Solutia. The LGAC vessels will be refilled with a total of 500 pounds of virgin activated carbon and the system restarted via the startup checklists presented in **Appendix A**.

7.3.5 BAG FILTER MAINTENANCE

Cleaning out (or replacement) of the filter within the Bag Filter (BPF 701) unit is indicated by excessive headlosses across the filter housing (indicated by the pressure gauge readings upstream and downstream of the filters) and/or flowrate reduction. Refer to the manufacturers specifications in **Appendix C** for maintenance information.

7.3.6 CARBON FILTER VENTILATION SYSTEM MAINTENANCE

The passive vent system GAC drums will require replacement when VOCs breakthrough is encountered at the discharge stack of the each unit. Once detectable vapor concentrations can be measured, replace the carbon drum with a new drum, and properly dispose of the spent carbon drum. The schedule for carbon filter maintenance is included on the **System Maintenance Checklist** (**Appendix A**).

7.4 DRUM AND SATELLITE WASTE ACCUMULATION INSPECTIONS

As discussed in **Sections 3.1** and **3.4.1**, NAPL will be manually pumped from the OWS 301 NAPL storage tank to a satellite waste accumulation area. The satellite waste accumulation area has a 55-gallon steel drum equipped with secondary containment, for later off-site disposal by Solutia. The drum will be inspected on a weekly basis to check for integrity, leaks, and proper labeling.

Inspection Logs are provided in **Appendix A** of this OM&M Manual.

8.0 TROUBLESHOOTING PROCEDURES

Due to the complexity of the system, a comprehensive troubleshooting procedure for every piece of equipment cannot be provided. However, some of the more common and general system faults are included in the below table. Refer to the manufacturer's documentation for information and troubleshooting procedures for a specific piece of equipment.

No.	Problem	Fault/Possible Actions
1.	No power	1. Check main disconnects to ensure that system breakers have not been thrown. Do not reactivate system until reason for breaker fault is determined (motor failure, thermal overload, etc.). 2. Power outage, wait for power to return, and restart system.
2.	High Vacuum /High Pressure Conditions in Process	1. Check that inlet, outlet, or other in-line valves for the appropriate equipment are set properly. 2. Assess possible change in subsurface conditions (high water table elevations affecting SVE/AI wells). 3. Check in-line particulate filters for high headlosses (SVE) and clean/replace filters if needed. 4. Check inlet air particulate filter (AI). 5. Check bag filter headlosses (clean filter if needed).
3.	No/Low Flow Conditions	1. Check Item No. 2, Steps 1-5. 2. Check blower or pump operation to ensure equipment is operating properly (refer to manufacturer's specifications).
4.	Low Vacuum/Low Pressure Conditions in Wellfield	1. Check Item No. 3, Steps 1, 3, and 4. 2. Ensure wellhead valves are properly set. 3. Check that PRV/VRV are not actuated.
5.	High Pressure in Wellfield	1. Check Item No. 3, Steps 1 and 2. 2. Ensure wellhead valves are properly set.
6.	Vapor Breakthrough Detected at Carbon Vent Filtration Units	1. Replace GAC vent unit.
7.	Vapor Discharge Concentration at ThermOx Higher Than Permissible Levels	1. Shut system down. 2. ThermOx not operating properly, or wellfield concentrations exceeding capacity of unit. Refer to Intellishare's Operation & Maintenance Guide in **Appendix D** for additional troubleshooting procedures.
8.	ThermOx Shutdown or Cannot Restart	1. SVE System shutdown, go to Item 9. 2. ThermOx faulted/alarm - refer to Intellishare's Operation & Maintenance Guide in **Appendix D** for additional troubleshooting procedures.
9.	SVE/AI Shutdown, or Cannot Restart	1. Refer to **Table 3** for potential alarm conditions that would result in system shutdown, and take appropriate actions. 2. No power (refer to Item No. 1). 3. ThermOx is not turned on or faulted (refer to Item No. 8).
10.	Vapor Concentrations Detected in Equipment Shed	1. Refer to **Section 6.5** of this manual for procedures.

No.	Problem	Fault/Possible Actions
11.	Vapor or Liquid Leaks in Process	1. Shut entire system down, or leaking piece of equipment as appropriate. 2. Conduct repairs as appropriate (follow appropriate health and safety procedures discussed in **Section 6.0** of this manual).
12.	Transfer Pumps Not Turning On/Off Automatically, and/or Tanks Overfilling.	1. Check level sensors for proper operation/fouling. 2. Check transfer pumps for proper operation. 3. Check that inlet flowrates to tanks are not higher than capacity of discharge transfer pumps.

9.0 OPERATING CONTINGENCY PLANS

It is required that the SVE system operates with minimal interruptions to achieve the objectives of the SVE Work Plan.

SHUTDOWN RESPONSE: In the event of an unplanned shutdown (non-emergency), the System Operator will be on call to respond Monday through Friday, during normal business hours (8:00 a.m. to 5:00 p.m.).

Any shutdown will trigger the alarm beacon on the outside of the equipment shed. The routine site patrols by Krummrich Security will be able to take note of a general alarm condition, and visually identify any emergency issues (fire, smoke, major leaks in equipment, etc.).

In the event of an emergency situation, the system will be shut down per **Section 5.6**, by the nearest qualified responder, if safe to do so. Major emergencies, such as fire, will require immediate notification of Krummrich Emergency Response/Security.

9.1 POWER FAILURE

In the event of a power failure, the system will shut down and send an autodialer message. The system will not restart automatically.

The System Operator will respond as soon as possible to ensure that downtime is minimal. Refer the startup/re-start procedures in **Section 5.0**, and if needed, the troubleshooting procedures in **Section 8.0**.

9.2 MANIFOLD PIPING FAILURE

In the unlikely event of a manifold piping failure (overpressure/bursting, chemical related failure, cracking due to ultraviolet deterioration, or physical damage), there are a number of alarm conditions (see **Table 3**) that will shut the system down and notify the System Operator. For these conditions, the System Operator will respond as soon as possible to repair the piping, as needed, and ensure that downtime is minimal.

The standard maintenance and inspection schedule will be used to identify and prevent failures in the above specific portions of manifold piping. If damage or leaks are identified during the inspections, then the manifolding will be replaced immediately.

9.3 BLOWER FAILURE

In the event of a blower failure, the system will shut down and send an autodialer message. The System Operator will respond as soon as possible to ensure that down time is minimal. If the blower requires repair, the appropriate manufacturer, or local service company, will be contacted for expedited repair. Refer the startup/re-start procedures in **Section 5.0**, and if needed, the troubleshooting procedures in **Section 8.0**.

9.4 DISCHARGE PERMIT NON-COMPLIANCE

In the event that the treated vapor discharge or water discharge from the system does not meet the required specifications (per the applicable permits in **Appendix G**), the system will be shut

down and troubleshooting procedures (**Section 8.0**) will commence. Frequent routine monitoring of the various discharge streams, and evaluation of the trends in discharge concentrations, will be performed to identify, as possible, any emerging issues with the treatment processes (ThermOx and LGAC units) to avoid potential non-compliance scenarios.

9.5 LIQUID RELEASE/SPILLS

In the event of a minor water, liquid, or NAPL spill, a spill kit is located near the personnel door of the equipment shed. Absorbent pads for minor clean-ups, or for use to absorb minor excess liquids during maintenance activities, will also be available for use.

Use the required air monitoring protocols discussed in **Section 6.5** of this manual (also in Section 7.0 of the Site HASP) when dealing with potentially contaminated liquids.

In the unlikely event of a major release, immediately contact Krummrich Emergency Response/Security, then contact the XDD Project Manager.

TABLES

TABLE 1
Project Contact Information
SVE Operation, Maintenance, and Monitoring Manual
W.G. Krummrich Facility, Sauget, Illinois
Revision 1.0: January 2012

Company	Name	Function	Office	Mobile	E-Mail
Krummrich EMERGENCY RESPONSE	**From Facility Phone, Dial Station 2000 From Mobile Phone, Dial 618-482-2000**				
Plant Dispatch (Anne Green)	**Dial 618-271-5835**				
SOLUTIA INC.	Jerry Rinaldi	Overall Project Manager	314-674-3312	314-306-4418	gmrina@solutia.com
	Bill Johnson	Big Mo SVE Project Manager	314-674-1161	314-452-2269	wgjohn@solutia.com
	Tom Gartzke	Krummrich ESHS Lead	618-482-6353	618-980-9320	trgart@solutia.com
	Brett Shank	Krummrich Environmental Specialist	618-482-6545	314-452-3510	bdshan@solutia.com
	Dave Richardson	Krummrich Facilities/Services	618-482-6432		dhrich@solutia.com
	Dennis Kuhl	Krummrich CMR	618-482-6459	618-520-9819	dmkuhl@solutia.com
	Ron Dill	Krummrich CMR		618-978-3366	rjdill3@solutia.com
	John Schwable	Krummrich CMR		618-520-0499	jcschw1@solutia.com
	Jeff Hannah	Krummrich Electrical Engineer	618-482-6554	618-973-3990	jthann@solutia.com
XDD (SVE Project Engineer)	Scott Crawford	Overall Project Manager	603-418-3104	603-321-6985	crawford@xdd-llc.com
	Dennis Keane	Project Manager	603-418-3103	603-339-2793	keane@xdd-llc.com
	Erin Stanisewski	Site management/engineer	603-418-3121	603-545-9793	white@xdd-llc.com
	Curt Fahnestock	Operator		618-340-2229	curtfahnestock@yahoo.com

TABLE 2
SVE Well and Vapor Probe Construction Details
SVE Operation, Maintenance, and Monitoring Manual
W.G. Krummrich Facility, Sauget, Illinois

Well ID	Date Installed	Soil Geology*			Shallow Interval				Deep Interval			
		SF/USS	ISC	LSS	Bentonite	Sand Filter Pack	Top of Screen	Bottom of Screen	Bentonite	Sand Filter Pack	Top of Screen	Bottom of Screen
		(ft)	(ft)	(ft)	(ft)	(ft)	(ft bgs)		(ft)	(ft)	(ft bgs)	
SVE Wells												
SVE-01 D	9/6/11	0.0 to 7.5	7.5 to 10.5	10.5 to 15.0	--	--	--	--	9.5 to 10.5	10.5 to 15.0	11	15
SVE-02 S/D	9/6/11	0.0 to 6.0	6.0 to 11.0	11.0 to 15.0	2.5 to 3.5	3.5 to 6.5	4	6	6.5 to 12.5	12.5 to 15.0	13	15
SVE-03 S	9/2/11	0.0 to 5.3	--	--	3.0 to 4.0	4.0 to 7.5	4.5	7.5	--	--	--	--
SVE-04 S	9/2/11	0.0 to 7.5	--	--	3.0 to 4.0	4.0 to 6.5	4.5	6.5	--	--	--	--
SVE-05 S/D	9/2/11	0.0 to 5.0	5.0 to 11.6	11.6 to 15.0	3.0 to 4.0	4.0 to 6.5	4.5	6.5	9.5 to 10.5	10.5 to 15.0	11	15
SVE-06 S/D**	8/31/11	--	--	--	--	--	--	--	--	--	--	--
SVE-07 D	8/31/11	0.0 to 5.9	5.9 to 9.2	9.2 to 15.0	--	--	--	--	9.5 to 10.5	10.5 to 15.0	11	15
SVE-08 D	9/2/2011	6.0 to 10.0	10.0 to 10.7	10.7 to 15.0	--	--	--	--	9.5 to 10.5	10.5 to 15.0	11	15
SVE-09 S/D	8/31/2011	0.0 to 2.5	2.5 to 10.8	10.8 to 15.0	1.5 to 2.5	2.5 to 5.0	3	5	9.5 to 10.5	10.5 to 15.0	11	15
SVE-10 S/D	8/31/2011	0.0 to 4.8	4.8 to 10.6	10.6 to 15.0	2.5 to 3.5	3.5 to 6.0	4	6	9.5 to 10.5	10.5 to 15.0	11	15
SVE-11 S/D	8/30/2011	0.0 to 4.0	4.0 to 8.6	8.6 to 15.0	2.5 to 3.5	3.5 to 8.0	4	8	9.5 to 10.5	10.5 to 15.0	11	15
SVE-12 S/D	8/30/11	0.0 to 7.0	7.0 to 10.0	10.0 to 15.0	1.5 to 2.5	2.5 to 5.0	3	5	9.5 to 10.5	10.5 to 15.0	11	15
SVE-13S	8/18/11	0.0 to 8.6	8.6 to 12.3	12.3 to 15.0	1.5 to 2.5	2.5 to 6.0	3	5	6.0 to 15.0	--	--	--
SVE-14 S/D	8/18/11	5.0 to 8.2	8.2 to 11.3	11.3 to 15.0	1.5 to 2.5	2.5 to 5.0	3	5	9.5 to 10.5	10.5 to 15.0	11	15
SVE-15 S/D	8/18/11	0.0 to 5.0	--	5.0 to 15.0	2.5 to 3.5	3.5 to 6.0	4	6	9.5 to 10.5	10.5 to 15.0	11	15
SVE-16 S/D	8/18/11	5.0 to 9.3	--	--	2.5 to 3.5	3.5 to 6.0	4	6	9.5 to 10.5	10.5 to 15.0	11	15
SVE-17 S/D	8/19/11	0.0 to 3.5	3.5 to 4.5	5.5 to 6.0	2.5 to 3.5	3.5 to 6.0	4	6	9.5 to 10.5	10.5 to 15.0	11	15
SVE-18 S/D	8/18/11	0.0 to 5.0	--	--	2.5 to 3.5	3.5 to 8.0	4	8	9.5 to 10.5	10.5 to 15.0	11	15
SVE-19 S/D	8/25/11	0.0 to 7.0	7.0	12.0 to 15.0	2.5 to 3.5	3.5 to 9.0	4	9	9.5 to 10.5	10.5 to 15.0	11	15
SVE-20 S/D	8/25/11	0.0 to 5.5	5.5 to 10.5	10.5 to 15.0	1.5 to 2.5	2.5 to 7.0	3	7	9.5 to 10.5	10.5 to 15.0	11	15
SVE-21 S/D	8/24-25/11	0.0 to 7.0	7.0 to 9.5	9.5 to 15.0	2.5 to 3.5	3.5 to 8.0	4	8	9.5 to 10.5	10.5 to 15.0	11	15
SVE-22 S/D	8/24/11	0.0 to 7.0	--	--	1.5 to 2.5	2.5 to 7.0	3	7	9.5 to 10.5	10.5 to 15.0	11	15
SVE-23 S/D	8/24/11	0.0 to 5.1	5.1 to 12.2	12.2 to 15.0	1.5 to 2.5	2.5 to 7.0	3	7	9.5 to 10.5	10.5 to 15.0	11	15
SVE-24 S/D	8/24/11	0.0 to 3.5	3.5 to 9.5	9.5 to 15.0	1.5 to 2.5	2.5 to 5.0	3	5	9.5 to 10.5	10.5 to 15.0	11	15
SVE-25 S/D	9/6/11	0.0 to 5.5	5.5 to 10.0	10.0 to 15.0	2.5 to 3.5	3.5 to 6.0	4	6	9.5 to 10.5	10.5 to 15.0	11	15
SVE-26 S/D	8/24/11	0.0 to 4.3	4.3 to 8.0	8.0 to 15.0	1.5 to 2.5	2.5 to 7.0	3	6	9.5 to 10.5	10.5 to 15.0	11	15
SVE-27 S/D	8/24-25/11	0.0 to 7.0	7.0 to 13.9	13.9 to 15.0	1.5 to 2.5	2.5 to 8.0	3	8	9.5 to 10.5	10.5 to 15.0	11	15
SVE-28 S/D	8/25/11	0.0 to 7.0	7.0 to 9.7	9.7 to 15.0	1.5 to 2.5	2.5 to 8.0	3	8	9.5 to 10.5	10.5 to 15.0	11	15
SVE-29 S/D	8/25/11	0.0 to 10.5	10.5 to 15.0	--	2.5 to 3.5	3.5 to 8.0	4	8	9.5 to 10.5	10.5 to 15.0	11	15
SVE-30 S/D	8/25/11	0.0 to 4.0	4.0 to 8.0	8.0 to 15.0	1.5 to 2.5	2.5 to 7.0	3	7	9.5 to 10.5	10.5 to 15.0	11	15
SVE-31 S/D	8/31/11	0.0 to 7.0	--	7.0 to 15.0	3.0 to 4.0	4.0 to 8.5	4.5	8.5	9.5 to 10.5	10.5 to 15.0	11	15
SVE-32 S/D	8/31/11	0.0 to 8.2	--	8.2 to 15.0	3.0 to 4.0	4.0 to 7.5	4.5	7.5	9.5 to 10.5	10.5 to 15.0	11	15
SVE-33 S/D	8/26/11	0.0 to 7.0	7.0 to 10.5	10.5 to 15.0	2.5 to 3.5	3.5 to 7.0	4	7	9.5 to 10.5	10.5 to 15.0	11	15
SVE-34 S/D	8/26/11	0.0 to 10.0	10.0 to 11.0	11.0 to 15.0	3.5 to 4.5	4.5 to 8.0	5	8	9.5 to 10.5	10.5 to 15.0	11	15
SVE-35 S/D	8/25/11	0.0 to 9.5	9.5 to 10.0	10.0 to 15.0	2.5 to 3.5	3.5 to 8.0	4	8	9.5 to 10.5	10.5 to 15.0	11	15
SVE-36 S/D	8/25/11	0.0 to 9.0	9.0 to 11.0	11.0 to 15.0	2.5 to 3.5	3.5 to 8.0	4	8	9.5 to 10.5	10.5 to 15.0	11	15
SVE-37 S/D	8/25/11	0.0 to 7.0	7.0 to 11.5	11.5 to 15.0	1.5 to 2.5	2.5 to 7.0	3	7	9.5 to 10.5	10.5 to 15.0	11	15
SVE-38 D	9/6/11	0.0 to 6.5	--	6.5 to 15.0	--	--	--	--	9.5 to 10.5	10.5 to 15.0	11	15
SVE-39 S/D	8/25/11	0.0 to 5.5	5.5 to 10.0	10.0 to 15.0	1.5 to 2.5	2.5 to 5.0	3	5	9.5 to 10.5	10.5 to 15.0	11	15
SVE-40 S/D	8/25/11	0.0 to 7.0	7.0 to 10.0	10.0 to 15.0	2.5 to 3.5	3.5 to 8.0	4	8	9.5 to 10.5	10.5 to 15.0	11	15
SVE-41 S/D	8/25-8/26	0.0 to 7.0	7.0 to 11.0	11.0 to 15.0	2.5 to 3.5	3.5 to 8.0	4	8	9.5 to 10.5	10.5 to 15.0	11	15
SVE-42 S/D	8/26/11	0.0 to 7.0	7.0 to 10.5	10.5 to 15.0	2.5 to 3.5	3.5 to 7.0	4	7	9.5 to 10.5	10.5 to 15.0	11	15
SVE-43 S/D	8/26/11	0.0 to 5.0	5.0 to 11.0	11.0 to 15.0	1.5 to 2.5	2.5 to 5.0	3	5	9.5 to 10.5	10.5 to 15.0	11	15
SVE-44 S/D	8/26/11	0.0 to 9.5	--	9.5 to 15.0	2.5 to 3.5	3.5 to 5.0	3	5	9.5 to 10.5	10.5 to 15.0	11	15
SVE-45 S/D	8/31/11	0.0 to 9.4	9.4	10.9 to 15.0	2.5 to 3.5	3.5 to 8.0	4	8	9.5 to 10.5	10.5 to 15.0	11	15
SVE-46 S/D	8/30/11	0.0 to 9.0	--	9.0 to 15.0	2.5 to 3.5	3.5 to 7.0	4	7	9.5 to 10.5	10.5 to 15.0	11	15
SVE-47 S/D	8/30/11	0.0 to 5.0	5.0 to 9.0	9.0 to 15.0	1.5 to 2.5	2.5 to 6.0	3	6	9.5 to 10.5	10.5 to 15.0	11	15
SVE-48 S/D	8/30/11	0.0 to 7.0	7.0 to 10.2	10.2 to 15.0	1.5 to 2.5	2.5 to 6.0	3	6	9.5 to 10.5	10.5 to 15.0	11	15
SVE-49 S/D	8/30/11	0.0 to 6.0	6.0 to 10.5	10.5 to 15.0	2.5 to 3.5	3.5 to 8.0	4	8	9.5 to 10.5	10.5 to 15.0	11	15
SVE-50 S/D	8/26/11	0.0 to 6.5	6.5 to 9.5	9.5 to 15.0	2.5 to 3.5	3.5 to 7.0	4	7	9.5 to 10.5	10.5 to 15.0	11	15
SVE-51 D	9/6/11	0.0 to 2.8	2.8 to 7.0	7.0 to 15.0	--	--	--	--	9.5 to 10.5	10.5 to 15.0	11	15
SVE-52 S/D	9/6/11	0.0 to 6.0	6.0 to 7.0	--	2.5 to 3.5	3.5 to 6.0	4	6	9.5 to 10.5	10.5 to 15.0	11	15
SVE-53 S/D	8/30/11	0.0 to 4.0	4.0 to 9.7	9.7 to 15.0	1.5 to 2.5	2.5 to 6.0	3	6	9.5 to 10.5	10.5 to 15.0	11	15
SVE-54 S/D	8/30/11	0.0 to 5.5	5.5 to 9.4	9.4 to 15.0	1.5 to 2.5	2.5 to 7.0	3	7	9.5 to 10.5	10.5 to 15.0	11	15
SVE-55 S/D	8/30/11	0.0 to 5.8	5.8 to 7.0	--	1.5 to 2.5	2.5 to 7.0	3	7	9.5 to 10.5	10.5 to 15.0	11	15
SVE-56 S/D	8/30/11	0.0 to 7.5	7.5 to 8.1	8.1 to 15.0	1.5 to 2.5	2.5 to 7.0	3	7	9.5 to 10.5	10.5 to 15.0	11	15
SVE-57 S/D	8/30/11	0.0 to 8.5	8.5 to 10.2	--	1.5 to 2.5	2.5 to 7.0	3	7	9.5 to 10.5	10.5 to 15.0	11	15
SVE-58 S/D	9/7/11	0.0 to 7.4	7.4	8.5 to 15.0	2.5 to 3.5	3.5 to 8.0	4	8	9.5 to 10.5	10.5 to 15.0	11	15
SVE-59 S/D	9/7/11	0.0 to 6.3	--	6.3 to 15.0	3.0 to 4.0	4.0 to 7.5	4.5	7.5	9.5 to 10.5	10.5 to 15.0	11	15
SVE-60 S/D	9/7/11	0.0 to 6.0	6.0 to 8.5	8.5 to 15.0	2.5 to 3.5	3.5 to 7.0	4	7	9.5 to 10.5	10.5 to 15.0	11	15

TABLE 2
SVE Well and Vapor Probe Construction Details
SVE Operation, Maintenance, and Monitoring Manual
W.G. Krummrich Facility, Sauget, Illinois

Well ID	Date Installed	Soil Geology*			Shallow Interval				Deep Interval			
		SF/USS	ISC	LSS	Bentonite	Sand Filter Pack	Top of Screen	Bottom of Screen	Bentonite	Sand Filter Pack	Top of Screen	Bottom of Screen
		(ft)	(ft)	(ft)	(ft)	(ft)	(ft bgs)		(ft)	(ft)	(ft bgs)	
SVE Wells (continued)												
SVE-61 S/D	8/30/11	0.0 to 4.8	4.8 to 10.4	10.4 to 15.0	1.5 to 2.5	2.5 to 7.0	3	7	9.5 to 10.5	10.5 to 15.0	11	15
SVE-62 S/D	8/30/11	0.0 to 4.9	4.9 to 9.1	9.1 to 15.0	1.5 to 2.5	2.5 to 7.0	3	7	9.5 to 10.5	10.5 to 15.0	11	15
SVE-63 S/D	9/6/11	0.0 to 5.0	5.0 to 6.0	11.0 to 15.0	2.5 to 3.5	3.5 to 6.0	4	6	9.5 to 10.5	10.5 to 15.0	11	15
SVE-64 S/D	9/7/11	0.0 to 6.5	6.5 to 8.0	8.0 to 15.0	2.5 to 3.5	3.5 to 7.0	4	7	9.5 to 10.5	10.5 to 15.0	11	15
SVE-65 S/D	9/6/11	0.0 to 12.5	12.5 to 14.0	14.0 to 15.0	3.5 to 4.5	4.5 to 8.0	5	8	9.5 to 10.5	10.5 to 15.0	11	15
SVE-66 S/D	8/31/11	0.0 to 7.0	7.0 to 13.0	13.0 to 15.0	2.5 to 3.5	3.5 to 8.0	4	8	9.5 to 10.5	10.5 to 15.0	11	15
SVE-67 S/D	9/6/11	0.0 to 6.0	6.0 to 8.5	8.5 to 15.0	3.0 to 4.0	4.0 to 6.5	4.5	6.5	9.5 to 10.5	10.5 to 15.0	11	15
SVE-68 S/D	9/7/11	0.0 to 6.0	--	6.0 to 15.0	3.0 to 4.0	4.0 to 7.5	4.5	7.5	9.5 to 10.5	10.5 to 15.0	11	15
SVE-69 S/D	9/8/11	0.0 to 4.5	4.5 to 7.4	7.4 to 15.0	2.5 to 3.5	3.5 to 6.0	4	6	9.5 to 10.5	10.5 to 15.0	11	15
SVE-70 S/D	9/8/11	0.0 to 4.5	4.5 to 10.1	10.1 to 15.0	2.5 to 3.5	3.5 to 7.0	4	7	9.5 to 10.5	10.5 to 15.0	11	15
SVE-71 S/D	9/9/11	0.0 to 3.0	--	13.0 to 15.0	2.5 to 3.5	3.5 to 7.0	4	7	9.5 to 10.5	10.5 to 15.0	11	15
SVE-72 S/D	9/7/11	0.0 to 7.0	7.0 to 8.0	8.0 to 15.0	3.0 to 4.0	4.0 to 6.5	4.5	6.5	9.5 to 10.5	10.5 to 15.0	11	15
SVE-73 S/D	9/7/11	0.0 to 5.7	5.7 to 9.0	9.0 to 15.0	3.0 to 4.0	4.0 to 5.5	4.5	5.5	9.5 to 10.5	10.5 to 15.0	11	15
SVE-74 D	9/7/11	0.0 to 7.4	7.4 to 10.0	10.0 to 15.0	--	--	--	--	9.5 to 10.5	10.5 to 15.0	11	15
SVE-75 D	9/9/11	0.0 to 3.5	3.5 to 10.5	10.5 to 15.0	--	--	--	--	9.5 to 10.5	10.5 to 15.0	11	15
SVE-76 D	9/8/11	0.0 to 8.5	--	8.5 to 15.0	--	--	--	--	9.5 to 10.5	10.5 to 15.0	11	15
SVE-77 D	9/8/11	0.0 to 10.0	--	10.0 to 15.0	--	--	--	--	9.5 to 10.5	10.5 to 15.0	11	15
SVE-78 S/D	9/9/11	0.0 to 6.0	6.0 to 10.8	10.8 to 15.0	3.0 to 3.5	3.5 to 7.0	4	7	9.5 to 10.5	10.5 to 15.0	11	15
SVE-79 S/D	9/8/11	0.0 to 2.4	2.4 to 10.0	10.0 to 15.0	2.5 to 3.5	3.5 to 7.0	4	7	9.5 to 10.5	10.5 to 15.0	11	15
SVE-80 S/D	9/9/11	0.0 to 3.5	3.5 to 11.6	11.6 to 15.0	3.0 to 3.5	3.5 to 7.0	4	7	9.5 to 10.5	10.5 to 15.0	11	15
SVE-81 S/D	9/8/11	0.0 to 6.0	6.0 to 10.0	10.0 to 15.0	2.5 to 3.5	3.5 to 7.0	4	7	9.5 to 10.5	10.5 to 15.0	11	15
SVE-82 S/D	9/9/11	0.0 to 6.0	6.0 to 10.0	10.0 to 15.0	3.0 to 3.5	3.5 to 7.0	4	7	9.5 to 10.5	10.5 to 15.0	11	15
SVE-83 S/D	9/8/11	--	6.0 to 10.8	10.8 to 15.0	3.0 to 4.0	4.0 to 7.5	4.5	7.5	9.5 to 10.5	10.5 to 15.0	11	15
SVE-84 S/D	9/9/11	0.0 to 6.8	6.8 to 7.3	7.3 to 15.0	3.0 to 3.5	3.5 to 7.0	4	7	9.5 to 10.5	10.5 to 15.0	11	15
SVE-85 S/D	9/8/11	0.0 to 2.0	2.0 to 11.7	11.7 to 15.0	1.5 to 2.5	2.5 to 6.0	3	6	9.5 to 10.5	10.5 to 15.0	11	15
Vapor Probes												
VP-01 S/D	9/2/11	0.0 to 7.9	7.9 to 11.5	11.5 to 15.0	3.0 to 4.0	4.0 to 6.0	4.5	5.5	6.0 to 12.5	12.5 to 15.0	13	15
VP-02 S/D	8/22/11	0.0 to 8.2	8.2 to 10.0	10.0 to 15.0	3.0 to 4.0	4.0 to 7.0	4.5	6.5	7.0 to 12.5	12.5 to 15.0	13	15
VP-03 S/D	8/22/11	0.0 to 8.5	8.5 to 9.5	9.5 to 15.0	3.0 to 4.0	4.0 to 7.0	4.5	6.5	7.0 to 12.5	12.5 to 15.0	13	15
VP-04 S/D	8/22/11	0.0 to 3.6	3.6 to 9.2	9.2 to 15.0	2.5 to 3.5	3.5 to 6.5	4	6	6.5 to 12.5	12.5 to 15.0	13	15
VP-05 S/D	8/22/11	0.0 to 7.2	7.2 to 11.3	11.3 to 15.0	3.0 to 4.0	4.0 to 7.0	4.5	6.5	7.0 to 12.5	12.5 to 15.0	13	15
VP-06 S/D	8/23/11	0.0 to 8.0	8.0 to 10.0	10.0 to 15.0	2.5 to 3.5	3.5 to 6.5	4	6	6.5 to 12.5	12.5 to 15.0	13	15
VP-07 S/D	8/23/11	0.0 to 5.5	5.5 to 6.2	6.2 to 15.0	3.5 to 4.5	4.5 to 7.5	5	7	7.5 to 12.5	12.5 to 15.0	13	15
VP-08 S/D	8/23/11	0.0 to 4.6	4.6 to 9.4	9.4 to 15.0	3.0 to 4.0	4.0 to 7.0	4.5	6.5	7.0 to 12.5	12.5 to 15.0	13	15
VP-09 S/D	8/23/11	0.0 to 5.6	5.6 to 9.5	9.5 to 15.0	2.5 to 3.5	3.5 to 6.5	4	6	6.5 to 12.5	12.5 to 15.0	13	15
VP-10 S/D	8/24/11	0.0 to 5.0	5.0 to 9.0	9.0 to 15.0	2.5 to 3.5	3.5 to 6.5	4	6	6.5 to 12.5	12.5 to 15.0	13	15
VP-11 S/D	8/23/11	0.0 to 6.0	6.0 to 9.5	9.5 to 15.0	3.0 to 4.0	4.0 to 7.0	4.5	6.5	7.0 to 12.5	12.5 to 15.0	13	15
VP-12 S/D	9/7/11		--		3.5 to 4.5	4.5 to 7.5	5	7	7.5 to 12.5	12.5 to 15.0	13	15
VP-13 S/D	9/8/11	0.0 to 6.0	6.0 to 7.0	7.0 to 15.0	3.5 to 4.5	4.5 to 7.5	5	7	7.5 to 12.5	12.5 to 15.0	13	15
VP-14 S/D	8/24/11	0.0 to 4.0	4.0 to 8.5	8.5 to 15.0	1.5 to 2.5	2.5 to 5.5	3	5	5.5 to 12.5	12.5 to 15.0	13	15
VP-15 S/D	8/24/11	0.0 to 5.2	5.2 to 9.5	9.5 to 15.0	3.0 to 4.0	4.0 to 7.0	4.5	6.5	7.0 to 12.5	12.5 to 15.0	13	15
VP-16 S/D	8/24/11	0.0 to 6.0	6.0 to 8.5	8.5 to 15.0	3.0 to 4.0	4.0 to 7.0	4.5	6.5	7.0 to 12.5	12.5 to 15.0	13	15

= wells/vapor probes completed above grade
= wells/vapor probes completed below grade

SF/USS = sandy fill/upper silty sand
ISC = intermediate silty clay
LSS = lower silty sand
ft bgs = feet below ground surface
* Soil geology is an estimate and is based on level of recovery
** Shallow and deep wells not installed due to presence of active loading dock in the immediate area.

Notes:
1. Vapor probe screens include 1 ft screen and 1 ft sump
2. Carbon steel risers installed to 6 inches above ground surface, except for below grade wells

TABLE 3
System Alarm Schedule
SVE Operation, Maintenance, and Monitoring Manual
W.G. Krummrich Facility, Sauget, Illinois
Revision 1.0: January 2012

Type	System	Data	Notes	Description	Function
Digital Inputs	SVE	FS 101	[1] [2] [3] [4]	Flow sensor, indicates minimum/no air flow (alarm condition)	Allow blower PDB 101 operation when activated. Shall have ~30 second delay to allow PDB 101 to get up to speed. PDB 101, AC 901 and AC 1001 shut down/alarm condition in the event of low/no flow detection.
		FS 201	[1] [2] [3] [4]	Flow sensor, indicates minimum/no air flow (alarm condition)	Allow blower PDB 201 operation when activated. Shall have ~30 second delay to allow PDB 201 to get up to speed. PDB 201, AC 901 and AC 1001 shut down/alarm condition in the event of low/no flow detection.
		FS 301	[1] [2] [3] [4]	Flow sensor, indicates minimum/no air flow (alarm condition)	Allow blower PDB 301 operation when activated. Shall have ~30 second delay to allow PDB 301 to get up to speed. PDB 301, AC 901, and AC 1001 shut down/alarm condition in the event of low/no flow detection.
		LS 101	[1] [2] [4] [5]	Air moisture separator AMS 101 high, high level sensor (alarm condition)	Shut down PDB 101 and provide alarm notification when LS 101 gets wet.
		LS 102		Air moisture separator AMS 101 high level sensor	Activate transfer pump TP 101 when LS 102 gets wet.
		LS 103		Air moisture separator AMS 101 low level sensor	Shut off transfer pump TP 101 when LS 103 becomes dry.
		LS 201	[1] [2] [4] [5]	Air moisture separator AMS 201 high, high level sensor (alarm condition)	Shut down PDB 201 and provide alarm notification when LS 201 gets wet.
		LS 202		Air moisture separator AMS 201 high level sensor	Activate transfer pump TP 201 when LS 202 gets wet.
		LS 203		Air moisture separator AMS 201 low level sensor	Shut off transfer pump TP 201 when LS 203 becomes dry.
		LS 301	[1] [2] [4] [5]	Air moisture separator AMS 301 high, high level sensor (alarm condition)	Shut down PDB 301 and provide alarm notification when LS 301 gets wet.
		LS 302		Air moisture separator AMS 301 high level sensor	Activate transfer pump TP 301 when LS 302 gets wet.
		LS 303		Air moisture separator AMS 301 low level sensor	Shut off transfer pump TP 301 when LS 303 becomes dry.
		LS 701	[1] [2] [4] [5]	Oil Water Separator OWS 701 high, high level sensor (alarm condition)	Shut down PDB 101, PDB 201, PDB 301 AC 901, and 1001 and provide alarm notification when LS 701 gets wet.
		LS 702		Oil Water Separator OWS 701 high level sensor	Activate transfer pump TP 701 when LS 702 gets wet.
		LS 703		Oil Water Separator OWS 701 low level sensor	Shut off transfer pump TO 701 when LS 703 becomes dry.
		LS 704	[1] [2] [4] [5]	Oil Water Separator NAPL Tank NT 701 high, high level sensor (alarm condition)	Shut down PDB 101, PDB 201, PDB 301, AC 901, AC 1001 and ThermOx and provide alarm notification when LS 704 gets wet (at 90% full).
		LS 705		Oil Water Separator NAPL Tank NT 701 high level sensor	Indicates the NAPL Tank NT 701 is 70% full.
		PDB 101	[1] [2] [4] [6] [10]	Blower PDB 101 overload (motor fault)	PDB 101 shut down/alarm notification in the event of motor overload (motor fault) detection.
		PDB 101	[2] [7] [9]	Blower PDB 101 operation	PDB 101 on/off
		PDB 201	[1] [2] [4] [6] [11]	Blower PDB 301 overload (motor fault)	PDB 201 shut down/alarm notification in the event of motor overload (motor fault) detection.
		PDB 201	[2] [7] [9]	Blower PDB 201 operation	PDB 201 on/off
		PDB 301	[1] [2] [4] [6] [12]	Blower PDB 301 overload (motor fault)	PDB 301 shut down/alarm notification in the event of motor overload (motor fault) detection.
		PDB 301	[2] [7] [9]	Blower PDB 301 operation	PDB 301 on/off
		PS/PT 401	[1] [2] [4] [5] [30]	Pressure switch/pressure transmitter, set at 14 psi (alarm condition, also an analog input)	Shut down PDB 101, PDB 201, PBD 301, AC 901, AC 1001, TP 101, TP 201, TP 301, TP701, TP 702, TP 703 when activated, and alarm notification in the event of high pressure detection.
		PS/PT 701	[1] [5] [30]	Pressure switch/pressure transmitter, set at 1 psi (alarm condition, also an analog input)	Shut down PDB 101, PDB 201, PBD 301, AC 901, AC 1001, TP 101, TP 201, TP 301, TP701, TP 702, TP 703, TP 801 and AS 801 when activated, and alarm notification in the event of high pressure detection.
		TP 101	[1] [4] [7] [13] [16] [17] [22] [23]	Transfer pump TP 101 overload (motor fault)	TP 101 and PDB 101 shut down/alarm notification in the event of motor overload (motor fault) detection.

TABLE 3
System Alarm Schedule
SVE Operation, Maintenance, and Monitoring Manual
W.G. Krummrich Facility, Sauget, Illinois
Revision 1.0: January 2012

Type	System	Data	Notes	Description	Function
Digital Inputs	SVE	TP 201	[1] [4] [7] [14] [18] [19] [22] [23]	Transfer pump TP 201 overload (motor fault)	TP 201 and PDB 201 shut down/alarm notification in the event of motor overload (motor fault) detection.
		TP 301	[1] [4] [7] [15] [20] [21] [22] [23]	Transfer pump TP 301 overload (motor fault)	TP 301 and PDB 301 shut down/alarm notification in the event of motor overload (motor fault) detection.
		TP 701	[1] [7] [24] [25]	Transfer pump TP 701 overload (motor fault)	TP 701, PDB 101, PDB 201, PDB 301, AC 901, and AC 1001 shut down/alarm notification in the event of motor overload (motor fault) detection.
		TP 702	[1] [7] [24] [25]	Transfer pump TP 702 overload (motor fault)	TP 702, PDB 101, PDB 201, PDB 301, AC 901, and AC 1001 shut down/alarm notification in the event of motor overload (motor fault) detection.
	Air Injection	FS 901	[1] [26]	Flow sensor, indicates minimum/no air flow (alarm condition)	Allow air compressor AC 901 operation when activated. Shall have ~30 second delay to allow AC 901 to get up to speed. AC 901 shut down/alarm notification in the event of low/no flow detection.
		FS 1001	[1] [26]	Flow sensor, indicates minimum/no air flow (alarm condition)	Allow air compressor AC 1001 operation when activated. Shall have ~30 second delay to allow AC 1001 to get up to speed. AC 1001 shut down/alarm notification in the event of low/no flow detection.
		AC 901	[1] [27] [28]	Air compressor AC 901 overload (motor fault)	AC 901 shut down/alarm notification in the event of motor overload (motor fault) detection.
		AC 901	[2] [7] [9]	Compressor AC 901 operation	AC 901 on/off
		AC 1001	[1] [27] [29]	Air compressor AC 1001 overload (motor fault)	AC 1001 shut down/alarm notification in the event of motor overload (motor fault) detection.
		AC 1001	[2] [7] [9]	Compressor AC 1001 operation	AC 1001 on/off
		PS/PT 2001	[1] [30]	Pressure switch/pressure transmitter, set at 16 psi, or compressor pressure capacity (alarm condition, also analog input)	AC 901 and AC 1001 shut down/alarm notification in the event of high pressure detection.
	General	Building Temperature Alarm	[1] [5] [32]	Building high temperature switch/transmitter, set at 120° F (alarm condition, also analog input)	Shut down entire system and provide alarm notification in the event of building high temperature shutdown/shutoff condition. Alarm conditions for the high temperature alarm will need to be manually reset before the entire system can restart. Thermostat to be adjustable between 0-150° F.
		Emergency Stop		Manual emergency stop power interruption (alarm condition)	Shut down entire system and provide alarm notification in the event of interior/exterior emergency stop activation and send alarm notification. Alarm will need to be manually reset, and emergency stop deactivated, before the entire system can restart.
		General Power Failure		Power failure/interruption (alarm condition)	Shut down entire system and provide alarm notification in the event of power failure/interruption, send alarm notification when power is restored.
		General ThermOx Alarm - Therm 501	[1] [3] [5] [31]	Alarm condition/signal from thermal oxidizer ThermOx control panel	Shut down entire system and provide alarm notification in the event of thermal oxidizer ThermOx shutdown/shutoff conditions. Alarm conditions for the general thermal oxidizer ThermOx alarm will need to be manually reset before the entire system can restart.
		LEL 701	[1] [5] [32]	High % LEL switch/% LEL transmitter, set at 10 % LEL (alarm condition, also analog input)	Shut down entire system and provide alarm notification in the event of building/container high % LEL shutdown/shutoff condition. Alarm conditions for the high % LEL alarm will need to be manually reset before the entire system can restart.
Digital Outputs	SVE	PDB 101	[7] [33] [34] [35]	Blower PDB 101 permissive operation	PDB 101 permissive on/off
		PDB 101	[31] [36] [37]	Blower PDB 101 operation and alarm shut down	PDB 101 on/off
		PDB 201	[7] [33] [34] [35]	Blower PDB 201 permissive operation	PDB 201 permissive on/off
		PDB 201	[31] [36] [37]	Blower PDB 201 operation and alarm shut down	PDB 201 on/off
		PDB 301	[7] [33] [34] [35]	Blower PDB 301 permissive operation	PDB 301 permissive on/off
		PDB 301	[31] [36] [37]	Blower PDB 301 operation and alarm shut down	PDB 301 on/off
		TP 101, TP 201, TP 301, TP 701, TP 702	[7] [33] [34]	Transfer pumps TP 101, TP 201, TP 301, TP 701, TP 702 permissive operation	TP 101, TP 201, TP 301, TP 701, TP 702 permissive on/off
		System Alarm Notification		System alarm notification to auto dialer/security system/remote telemetry system	In the event of any system alarm condition, provide alarm notification to autodialer/security system/remote telemetry system.
		System Operational Status		System operational status to remote telemetry system	Under normal operating conditions, provide system operation status (on/off) to remote telemetry system.

TABLE 3
System Alarm Schedule
SVE Operation, Maintenance, and Monitoring Manual
W.G. Krummrich Facility, Sauget, Illinois
Revision 1.0: January 2012

Type	System	Data	Notes	Description	Function
Digital Outputs	SVE	TP 101, TP 201, TP 301, TP 701, TP 702	[31] [36]	Transfer pump TP 101, TP 201, TP 301, TP 701, TP 702 operation and alarm shut down	TP 101, TP 201, TP 301, TP 701, TP 702 on/off
		TP 702	[8]	Transfer pump TP 702 operation and alarm shut down	Manual operation of Transfer Pump TP 702 with on/off switch
	Air Injection	AC 901	[7] [33] [34] [35]	Air Compressor AC 901 permissive operation	AC 901 permissive on/off
		AC 901	[2] [4] [31] [36] [37] [40] [41]	Air Compressor AC 901 operation and alarm shut down	AC 901 on/off
		AC 1001	[7] [33] [34] [35]	Air Compressor AC 1001 permissive operation	AC 1001 permissive on/off
		AC 1001	[2] [4] [31] [36] [37] [40] [41]	Air Compressor AC 1001 operation and alarm shut down	AC 1001 on/off
Analog Inputs/Outputs	SVE	FIA 401	[38]	Analog air flow rate indicator	Provide SVE system air flow rate data to remote telemetry system
		FT 701	[38]	Analog liquid totalizing flow meter	Provide discharge water flow rate/totalizer reading to the remote telemetry system.
		HM 101	[38] [39]	Total run time/hour meter	Provide blower PDB 101 total run time/hour data to remote telemetry system.
		HM 102	[38] [39]	Total run time/hour meter	Provide AMS 101 transfer pump TP 101 total run time/hour data to remote telemetry system.
		HM 201	[38] [39]	Total run time/hour meter	Provide blower PDB 201 total run time/hour data to remote telemetry system.
		HM 202	[38] [39]	Total run time/hour meter	Provide AMS 201 transfer pump TP 201 total run time/hour data to remote telemetry system.
		HM 301	[38] [39]	Total run time/hour meter	Provide blower PDB 201 total run time/hour data to remote telemetry system.
		HM 302	[38] [39]	Total run time/hour meter	Provide AMS 301 transfer pump TP 301 total run time/hour data to remote telemetry system.
		LEL 701	[38]	High % LEL switch/% LEL transmitter, set at 10 % LEL (alarm condition, also analog input)	Provide %LEL data to telemetry system. Also shut down PDB 101, PDB 201, PDB 301, AC 901, AC 1001, and ThermOx when activated, and alarm notification in the event of high %LEL detection.
		HM 701	[38] [39]	Total run time/hour meter	Provide oil water separator transfer pump TP 701 total run time/hour data to remote telemetry system.
		HM 702	[38] [39]	Total run time/hour meter	Provide oil water separator NAPL tank transfer pump TP 702 total run time/hour data to remote telemetry system.
		PS/PT 401	[1] [5] [30] [38]	Pressure switch/pressure transmitter, set at 16 psi or blower pressure capacity (analog input, also an alarm condition)	Provide combined SVE discharge pressure data to telemetry system. Also shut down PDB 101, PDB 201, PDB 301, AC 901, AC 1001, and ThermOx when activated, and alarm notification in the event of high pressure detection.
		PS/PT 701	[1] [5] [30] [38]	Pressure switch/pressure transmitter, set at 30 psi or LGAC pressure capacity (analog input, also an alarm condition)	Provide combined SVE water discharge pressure data to telemetry system. Also shut down PDB 101, PDB 201, PDB 301, AC 901, AC 1001 and ThermOx when activated, and alarm notification in the event of high pressure detection.
		VIA 101	[1] [5] [38]	Analog vacuum indicator and switch - set b/w 0 and 2" Hg (also an alarm condition)	Provide PDB 101 line vacuum data to remote telemetry system. Also shut down PDB 101, and provide alarm notification in the event of low/no vacuum detection.
		VIA 201	[1] [5] [38]	Analog vacuum indicator and switch - set b/w 0 and 2" Hg (also an alarm condition)	Provide PDB 201 line vacuum data to remote telemetry system. Also shut down PDB 201, and provide alarm notification in the event of low/no vacuum detection.
		VIA 301	[1] [5] [38]	Analog vacuum indicator and switch - set b/w 0 and 2" Hg (also an alarm condition)	Provide PDB 301 line vacuum data to remote telemetry system. Also shut down PDB 301, and provide alarm notification in the event of low/no vacuum detection.
	Air Injection	FIA 2001	[38]	Analog air flow rate indicator	Provide Air Injection system total air flow rate data to remote telemetry system.
		HM 901	[38]	Total run time/hour meter	Provide air compressor AC 901 total run time/hour data to remote telemetry system.
		HM 1001	[38]	Total run time/hour meter	Provide air compressor AC 1001 total run time/hour data to remote telemetry system.
		PS/PT 2001	[1] [5] [30] [38]	Pressure switch/pressure transmitter, set at 16 psi or AC pressure capacity (analog input, also an alarm condition)	Provide air compressor AC 901 and AC 1001 (AI system) discharge pressure data to telemetry system. Also shut down AC 901 and AC 1001 when activated, and alarm notification in the event of high pressure detection.
		TIA 901	[1] [5] [38]	Analog temperature indicator and switch - set at 140° F (also an alarm condition)	Provide air compressor AC 901 discharge temperature data to remote telemetry system. Also shut down AC 901 and provide alarm notification in the event of high temperature detection.
		TIA 1001	[1] [5] [38]	Analog temperature indicator and switch - set at 140° F (also an alarm condition)	Provide air compressor AC 1001 discharge temperature data to remote telemetry system. Also shut down AC 1001 and provide alarm notification in the event of high temperature detection.
	General	LEL 701	[38]	High % LEL switch/% LEL transmitter, set at 10 % LEL (alarm condition, also analog input)	Provide %LEL data to telemetry system. Also shut down PDB 101, PDB 201, PDB 301, AC 901, AC 1001, and ThermOx when activated, and alarm notification in the event of high %LEL detection.

TABLE 3
System Alarm Schedule

SVE Operation, Maintenance, and Monitoring Manual
W.G. Krummrich Facility, Sauget, Illinois
Revision 1.0: January 2012

Design Notes:

[1] Reset for all the alarm conditions will be located on the control panel.
[2] Air compressors AC 901 and AC 1001 will operate continually with no alarm conditions present. Under normal operating mode (on "AUTO"), air compressors AC 901 and AC 1001 will only operate if two or more PDBs (PDB 101, PDB 201, PDB 301) are operating. Under normal operating mode, any shutdown/shutoff condition or more of the PDB's will shut down AC 901 and AC 1001.
[3] Alarm condition for FS 101, FS 201, and FS 301 will need to be manually reset before PDB 101, PDB 201, PDB 301, AC 901, AC 1001 and the ThermOx can restart.

[4] If PDB 101, 201, and 301 switch is in "HAND" or "AUTO" position, any shutdown/shutoff condition of any two PDBs (PDB 101, PDB 201, PDB 301) will shut down AC 901 and AC 1001, if AC 901 and AC 1001 are in "AUTO" position.
[5] Alarm conditions for the general building temperature alarm, thermal oxidizer ThermOx alarm, LEL 701, LS 101, LS 201, LS 301, LS 701, LS 707, PS 301, PS/PT 401, PS/PT 701, PS/PT 2001, VIA 101, VIA 201, VIA 301, TIA 901, TIA 1001 will need to be manually reset before PDB 101, PDB 201, PDB 301 AC 901 and AC 1001 and ThermOx can restart.
[6] Alarm condition for PDB 101, PDB 201, and PDB 301 overload will need to be manually reset before PDB 101, PDB 201, PDB 301, AC 901, AC 100 and ThermOx can restart.
[7] PDB 101, PDB 201, PDB 301, AC 901, AC 1001, TP 101, TP 201, TP 301, and TP 701 shall be controlled with HOA (Hand/Off/Auto) switches.
[8] TP 702 will only run under manual operation, and will be controlled with an On/Off switch.
[9] If PDB 101, PDB 201, and PDB 301 switch is in "OFF" position, AC 901 and AC 1001 will operate in "HAND" position, not in "AUTO" position.
[10] If PDB 101 switch is in "HAND" or "AUTO" position, PDB 101 overload shutdown condition will shut down PDB 101.
[11] If PDB 201 switch is in "HAND" or "AUTO" position, PDB 201 overload shutdown condition will shut down PDB 201.
[12] If PDB 301 switch is in "HAND" or "AUTO" position, PDB 301 overload shutdown condition will shut down PDB 301.
[13] Alarm condition for TP 101 overload will need to be manually reset before TP 101 and PDB 101 can restart.
[14] Alarm condition for TP 201 overload will need to be manually reset before TP 201 and PDB 201 can restart.
[15] Alarm condition for TP 301 overload will need to be manually reset before TP 301 and PDB 301 can restart.
[16] If TP 101 switch is in "HAND" or "AUTO" position, TP 101 overload shutdown condition will shut down PDB 101.
[17] If TP 101 switch is in "OFF" position, PDB 101 will operate in "HAND" position, not in "AUTO" position.
[18] If TP 201 switch is in "HAND" or "AUTO" position, TP 201 overload shutdown condition will shut down PDB 201.
[19] If TP 201 switch is in "OFF" position, PDB 201 will operate in "HAND" position, not in "AUTO" position.
[20] If TP 301 switch is in "HAND" or "AUTO" position, TP 301 overload shutdown condition will shut down PDB 301.
[21] If TP 301 switch is in "OFF" position, PDB 301 will operate in "HAND" position, not in "AUTO" position.
[22] If TP 101, TP 201, and TP 301 switches are in "OFF" position, PDB 101, PDB 201, PDB 301, AC 901, AC 1001, TP 101, TP 201, TP 301, and thermal oxidizer ThermOx will operate in "HAND" position, not in "AUTO" position.
[23] If any two transfer pump (TP 101, TP 201, TP 301) switches are in "HAND" or "AUTO" position, an overload shutdown condition (from any two TP's) will shut down the corresponding PDB's, AC 901 and AC 1001, if they are in "AUTO" position.

[24] If TP 701 and TP 702 switches are in "HAND" or "AUTO" position, TP 701, and TP 702 overload shutdown conditions will shut down PDB 101, PDB 201, PDB 301, AC 901, AC 1001, and ThermOx respectively, if they are in "AUTO" position.
[25] If TP 701 switch is in "OFF" position, PDB 101, PDB 201, PDB 301, AC 901, AC 1001, TP 101, TP 201, TP 301, and thermal oxidizer ThermOx will operate in "HAND" position, not in "AUTO" position.
[26] Alarm condition for FS 901, FS 1001 will need to be manually reset before AC 901 and AC 1001 can restart.
[27] Alarm conditions for AC 901 and AC 1001 overload will need to be manually reset before AC 901 and AC 1001 can restart.
[28] If AC 901 switch is in "HAND" or "AUTO" position, AC 901 overload shutdown condition will shut down AC 901.
[29] If AC 1001 switch is in "HAND" or "AUTO" position, AC 1001 overload shutdown condition will shut down AC 1001.
[30] Alarm condition for PS/PT 401, PS/PT 701, and PS/PT 2001 will need to be manually reset before PDB 101, PDB 201, PDB 301, AC 901, AC 1001 and thermal oxidizer ThermOx can restart.
[31] The General alarm condition for thermal oxidizer TOX 501 will need to be manually reset before the entire system (both the SVE and AI systems) can restart. Also, under normal operating mode (on "AUTO"), the entire system will only operate if thermal oxidizer ThermOx is operating.
[32] The General alarm condition for thigh % LEL and the building temperature alarm will need to be manually reset before the entire system (both the SVE and AI systems) can restart. Also, under normal operating mode (on "AUTO"), the entire system will only operate if the LEL meter/transmitter is reading <10% LEL, and the building temperature alarm is reading <120° F.
[33] The General alarm condition for thermal oxidizer TOX 501 will need to be manually reset before the entire system (both the SVE and AI systems) can restart. Also, under normal operating mode (on "AUTO"), the entire system will only operate if thermal oxidizer ThermOx is operating.
[34] When TP 101 or TP 201, TP 301, TP 701, TP 702, PDB 101, PDB 201, PDB 301, AC 901, AC 1001 switch is in "OFF" position, the corresponding motor will remain off.
[35] When PDB 101, PDB 201 and PDB 301 switches are in "AUTO" position, operation of AC 901 or AC 1001 will start PDB 101, PDB 201, and PDB 301, unless PDB 101, PDB 201, or PDB 301 is shut down due to any alarm condition that requires manual reset.
[36] On power up with no active alarms and all HOA switches in "AUTO" position.
[37] Shut down of AC 901 and AC 1001 (AI system), will not shut down PDB 101, PDB 201, and PDB 301 (SVE system).
[38] All analog data signals will be sent to the remote telemetry system through the control panel.
[39] Total run time/hour meter can either be an analog device or a digital input signal (to PLC) to provide/calculate motor run time in hours for remote telemetry system.
[40] AC 901 and AC 1001 will only operate if two or more PDBs (PDB 101, PDB 201, PDB 301) are operating.
[41] Shutdown of AC 901 will not shutdown AC 1001, and vice versa.

General Notes:

1. Refer to Figure D-1 for the SVE system process equipment details.
2. Refer to Figure D-2 for the Air Injection (AI) system process equipment details.
3. All system controls are to be housed in one or two control panels.
4. Indicator lights on the control panel shall indicate all alarm conditions.
5. All alarm conditions/system shutdown events and analog inputs/outputs are to be logged via the remote telemetry system. The logging frequency/interval for the analog inputs/outputs is to be determined.

General Control Logic:

1. The SVE and AI systems will have independent system skids interlocked with each other, as specified in this table.
2. The AI system will be interlocked with the SVE system and will not operate without the SVE system operating. Under normal operating mode, any shutdown/shutoff condition of the SVE will shut down the AI system. Under normal operating mode, shutdown of the AI system will not shutdown the SVE system.
3. The AI and SVE system will include liquid-phase granular activated carbon (LGAC) for treatment of moisture generated by the SVE system and a Thermal Oxidation unit to be located near the exterior of the equipment container will treat the vapor stream.
4. The entire system (both the SVE and the AI systems) will be interlocked with the thermal oxidizer and will not operate without the thermal oxidizer operating. Under normal operating mode, any shutdown/shutoff condition of the thermal oxidizer will shut down the entire system. Also, the Thermal Oxidizer will not operate for more than 30 minutes without at least one of the SVE blowers operating. Shut down of all three SVE blowers, simultaneously, will shut down the Thermal

TABLE 4
System Monitoring Schedule
SVE Operation, Maintenance, and Monitoring Manual
W.G. Krummrich Facility, Sauget, IL
Revision 1.0: May 2012

Frequency	Task	Description	Media	Sampling Location	Measurement Type	Samples per Event	Analytical Method
Monthly	Process Monitoring	Air/vapor flow, pressure, vacuum, temperature	Vapor	Process equipment	Flow meters and pressure, vacuum & temperature gauges	NA	NA
		Extracted perched water/condensate volume	Water	Process equipment		NA	NA
		Total vapor extraction flowrate	Vapor	Process equipment		NA	NA
	Compliance Monitoring	Water permit compliance	Water	Post-treatment	Laboratory analysis	1	Per Permit, see Table 5
		Air permit compliance	Vapor	Post-treatment	Laboratory analysis	1	TO-15
		To confirm treatment effectiveness	Vapor	Pre- & post-treatment	Field measurement	1	PID
	Air Treatment Sampling	Combined SVE stream prior to the air treatment unit	Vapor	Process equipment	Field measurement	1	PID
			Vapor		Laboratory analysis	2	TO-15
	Water Level Monitoring	Collection of Water Levels	Groundwater	BSA-MW-1S	Field measurement	1	NA
Quarterly*	Performance Monitoring	Vapor extraction rates at individual SVE wells	Vapor	SVE wells	Field measurement	All active SVE wells	NA
		Vacuum at individual SVE wells	Vapor	SVE wells	Field measurement	All active SVE wells	NA
		Air injection rates at individual wells	Vapor	SVE wells	Field measurement	All active SVE wells	NA
		Pressure at individual air injection wells	Vapor	SVE wells	Field measurement	All active SVE wells	NA
		Vacuum/pressure at vapor probes/points	Vapor	Vapor probes/points	Field measurement	All vapor probes	NA
		Soil vapor samples	Vapor	SVE Wells and Vapor Probes	Field measurement	All active SVE wells	PID
Annually**	Performance Monitoring	Soil vapor samples	Vapor	SVE Wells and Vapor Probes	Laboratory analysis	13+	TO-15
	Soil Sampling	Soil sampling via direct push technology for laboratory analysis	Soil	TBD	Laboratory analysis	30+	8260B

Notes:
* = Quarterly event is inclusive of monthly event
** = Annual event is inclusive of quarterly and monthly events
+ = Minimum number of samples. Actual number may vary depending upon operational configuration of the wellfield (shallow versus deep operation)
NA - not applicable
PID - photoionization detector
TBD - to be determined
TO-15 - U.S. EPA Method TO-15 for VOC analysis
8260b - U.S. EPA Method 8260B for VOC analysis

TABLE 5
Compliance Monitoring Schedule

SVE/AI Operation, Maintenance, and Monitoring Manual

W.G. Krummrich Facility, Sauget, IL

Revision 1.0: January 2012

No.	Task	Frequency	Sampling Dates	Notes
1	Air Treatment Compliance Monitoring	Monthly	Last Monday of the Month	Total emissions shall not exceed 2.4 LBs/Hour, or 10.4 Tons/Year (7.9 Tons/Year for a single compound). Contaminant destruction of 85% required by ThermOx. Quarterly reporting required, see Permit in Appendix G.
2	Water Treatment Compliance Sampling	Monthly	Last Monday of the Month	See Permit in Appendix G for requirements.

TABLE 6
Maintenance Schedule
SVE/AI Operation, Maintenance, and Monitoring Manual
W.G. Krummrich Facility, Sauget, IL
Revision 1.0: January 2012

No.	Task	Frequency	Start Date	End Date	Estimated No. of Events	Required Checklists
1	Initial Shakedown	At initial startup	Jan-06-2012	Jan-20-2012	-	System Maintenance Checklist, Appendix A
2	Routine Site Checks (Initial Month)	Weekly	Jan-23-2012	Feb-24-2012	5	System Maintenance Checklist, Appendix A
3	Routine Site Checks (Ongoing)	Monthly	Feb-27-2012	2016	NA	System Maintenance Checklist, Appendix A

Notes:
NA = not applicable

FIGURES

N
North Tank Farm Area
Former Steamer Overhead Tank Area
Former Benzene Pipeline Area
Near Little Mo Area
Former Benzene and
Chlorobenzene Storage Area (Big Mo Area)
STATE ROUTE 3
125' 0' 125' 250'
XDD
STRATEGIC. ENVIRONMENTAL. SOLUTIONS.
SCALE: AS SHOWN
DATE: SEPTEMBER 2011
PROJECT NO.: 11002
CLIENT: SOLUTIA INC.
DRAWN BY: JTH
CHECKED BY: ELS
PROJ. MGMT. APPROVAL: SC
TITLE: W.G. KRUMMRICH FACILITY
TREATMENT AREAS
SAUGET, IL
DRAWING NO.: FIGURE 1
REV: 1

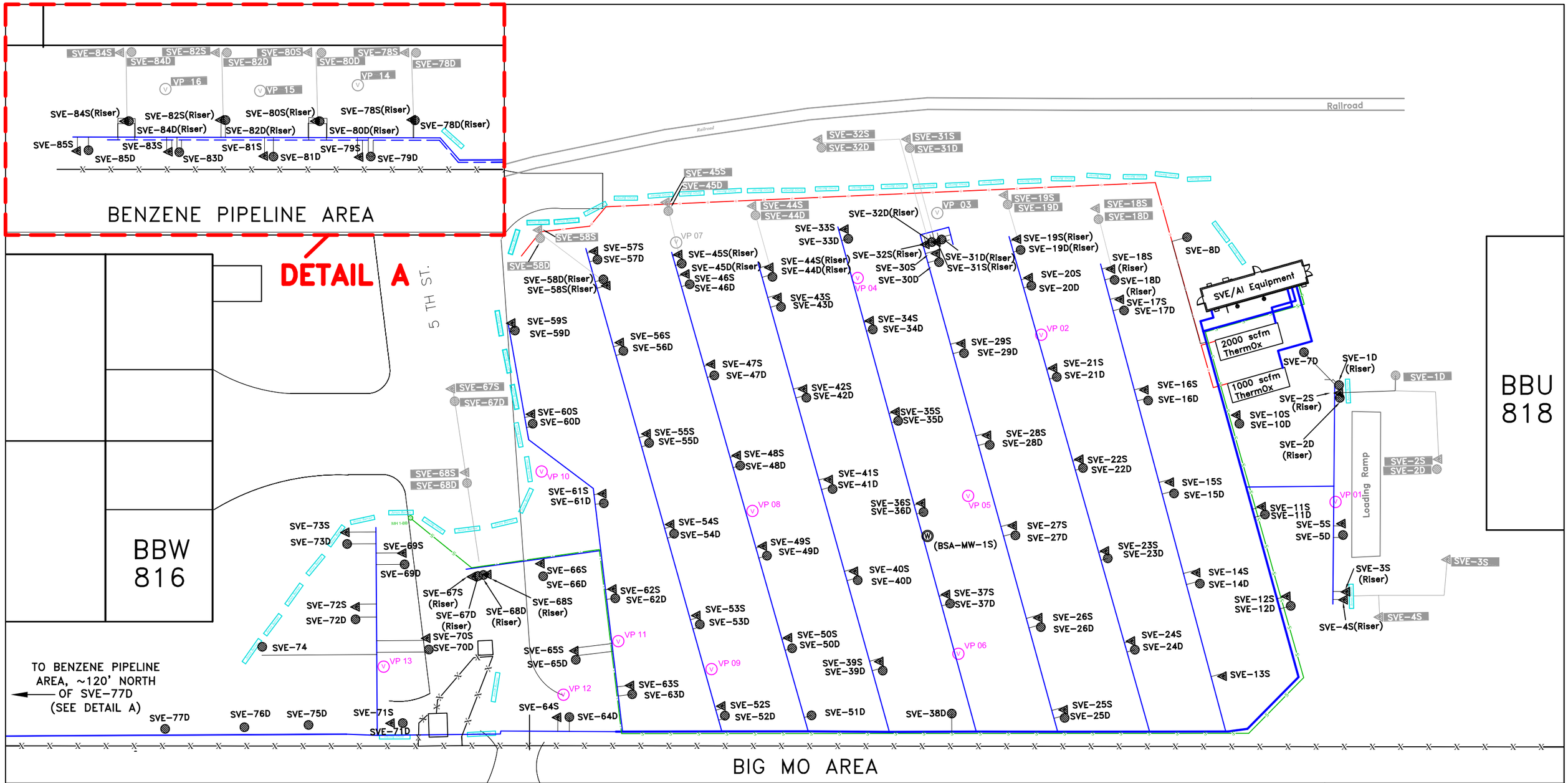

LEGEND

- = ABOVE GRADE DEEP WELL
- = ABOVE GRADE SHALLOW WELL
- = BELOW GRADE DEEP WELL
- = BELOW GRADE SHALLOW WELL
- = MONITORING WELL
- = VAPOR PROBE
- = BELOW GRADE VAPOR PROBE
- = SEWER MANHOLE
- = FENCELINE
- = GAS LINE
- = BELOW GRADE 2" CARBON STEEL PIPING (APPROXIMATE LOCATION)
- = 2" ABOVE GRADE INSULATED AND HEAT TRACED SCHEDULE 40 PVC PIPING
- = 6" ABOVE GRADE INSULATED AND HEAT TRACED SVE SCHEDULE 40 PVC PIPING
- = 12" ABOVE GRADE INSULATED AND HEAT TRACED SVE SCHEDULE 40 PVC PIPING
- = JERSEY BARRIER
- = SEWER LINE
- SVE-67D = BELOW GRADE WELL/VAPOR PROBE ID

NOTES:

- ALL ABOVE GRADE BRANCH AND MANIFOLD PIPING WAS HEAT TRACED AND INSULATED
- CLEANOUTS WERE INSTALLED AT THE TERMINUS OF ALL BRANCH AND MAIN SVE LINES

20' 0' 20' 40'

SCALE: AS SHOWN	
DATE: MAY 2012	
PROJECT NO.: 11002	
CLIENT: SOLUTIA INC.	
DRAWN BY: JDA	
CHECKED BY: DK	
PROJ. MGMT. APPROVAL: DK	

XDD
STRATEGIC. ENVIRONMENTAL. SOLUTIONS.

TITLE: SVE PIPING LAYOUT
W.G. KRUMMRICH FACILITY
SAUGET, IL

DRAWING NO.: FIGURE 2A

REV: 2

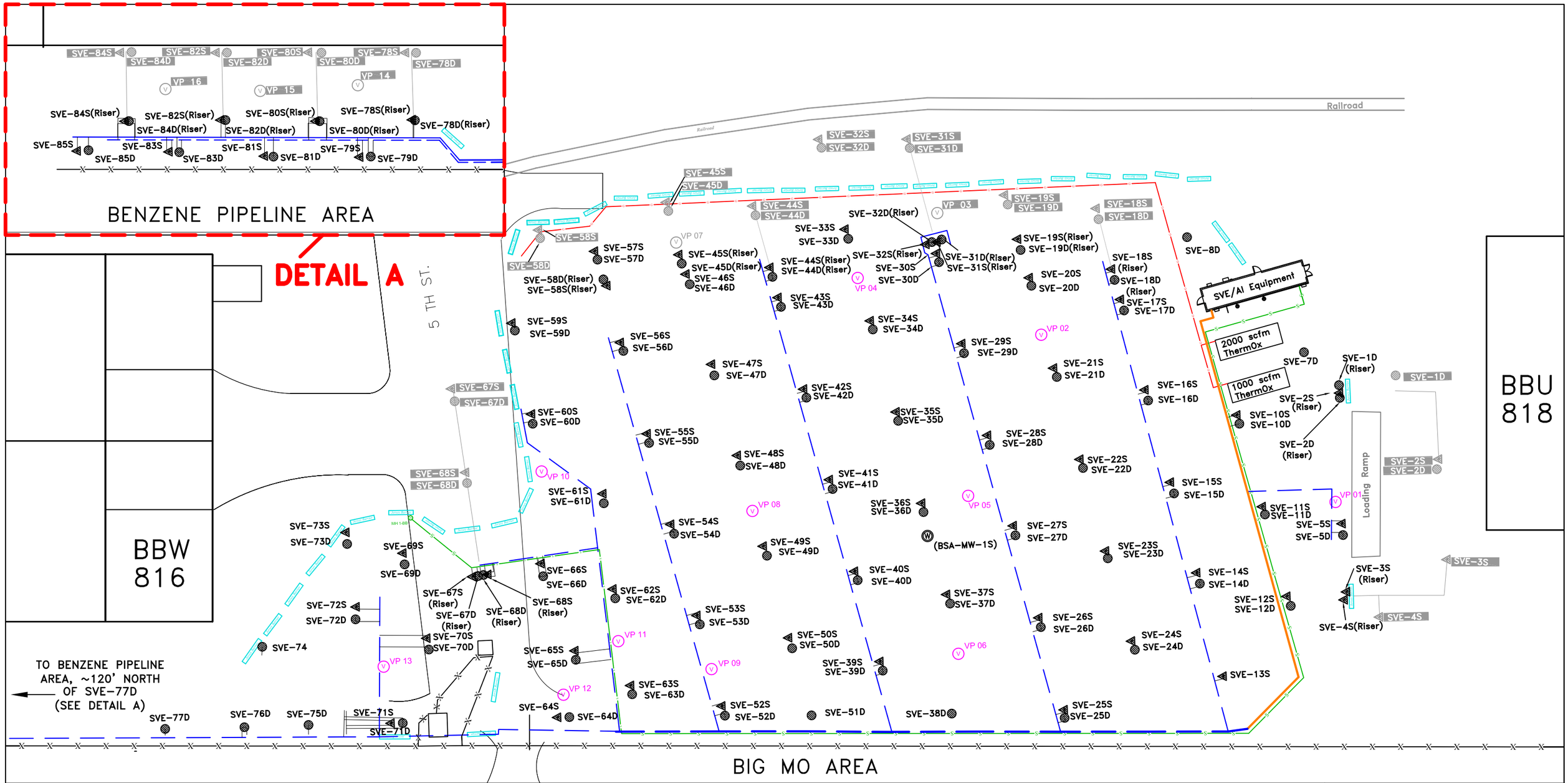

LEGEND

- = ABOVE GRADE DEEP WELL
- = ABOVE GRADE SHALLOW WELL
- = BELOW GRADE DEEP WELL
- = BELOW GRADE SHALLOW WELL
- = MONITORING WELL
- = VAPOR PROBE
- = BELOW GRADE VAPOR PROBE
- = SEWER MANHOLE
- = FENCELINE
- = GAS LINE
- = BELOW GRADE 2" CARBON STEEL PIPING (APPROXIMATE LOCATION)
- = 2" ABOVE GRADE SCHEDULE 80 CPVC PIPING
- = 6" ABOVE GRADE INSULATED AI SCHEDULE 40 CPVC PIPING
- = 12" ABOVE GRADE INSULATED AI CPVC PIPING
- = 12" ABOVE GRADE CARBON STEEL PIPING
- = JERSEY BARRIER
- = SEWER LINE
- SVE-67D = BELOW GRADE WELL/VAPOR PROBE ID

NOTES:

- ALL ABOVE GRADE BRANCH AND MANIFOLD PIPING WAS HEAT TRACED AND INSULATED
- CLEANOUTS WERE INSTALLED AT THE TERMINUS OF ALL BRANCH AND MAIN AI LINES

20' 0' 20' 40'

XDD
STRATEGIC. ENVIRONMENTAL. SOLUTIONS.

SCALE: AS SHOWN	TITLE: AI PIPING LAYOUT W.G. KRUMMRICH FACILITY SAUGET, IL
DATE: MAY 2012	
PROJECT NO.: 11002	
CLIENT: SOLUTIA INC.	
DRAWN BY: JDA	DRAWING NO.: FIGURE 2B
CHECKED BY: DK	REV: 2
PROJ. MGMT. APPROVAL: DK	

TYPICAL SVE/AI WELL

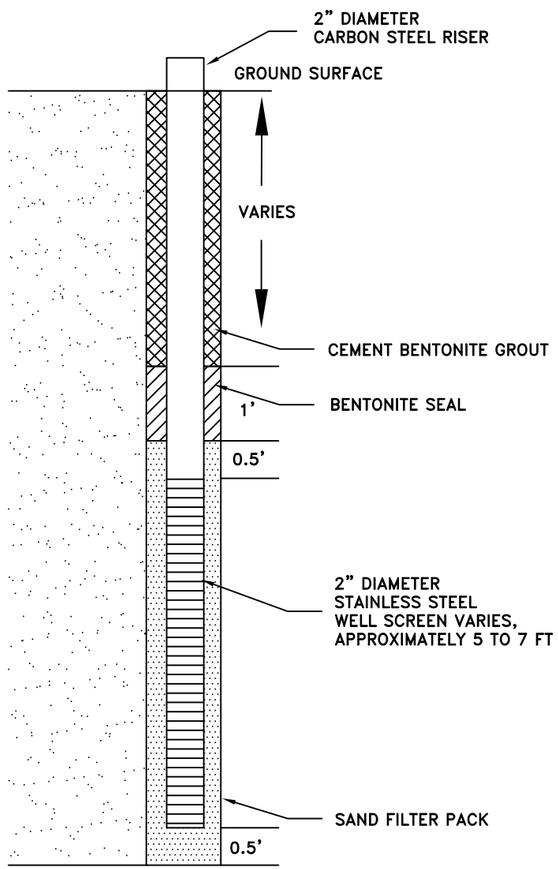

TYPICAL BELOW GRADE SVE/AI WELL COMPLETION DETAIL

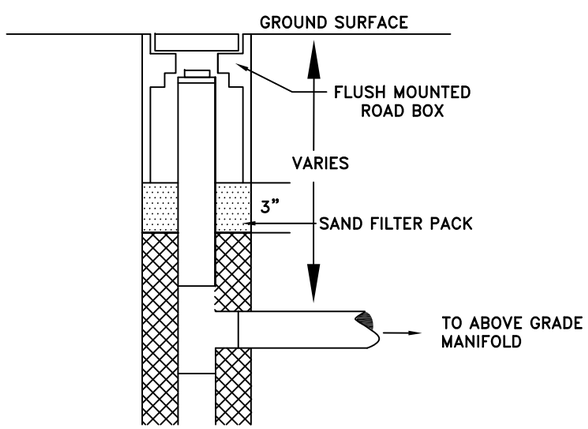

TYPICAL NESTED VAPOR PROBE

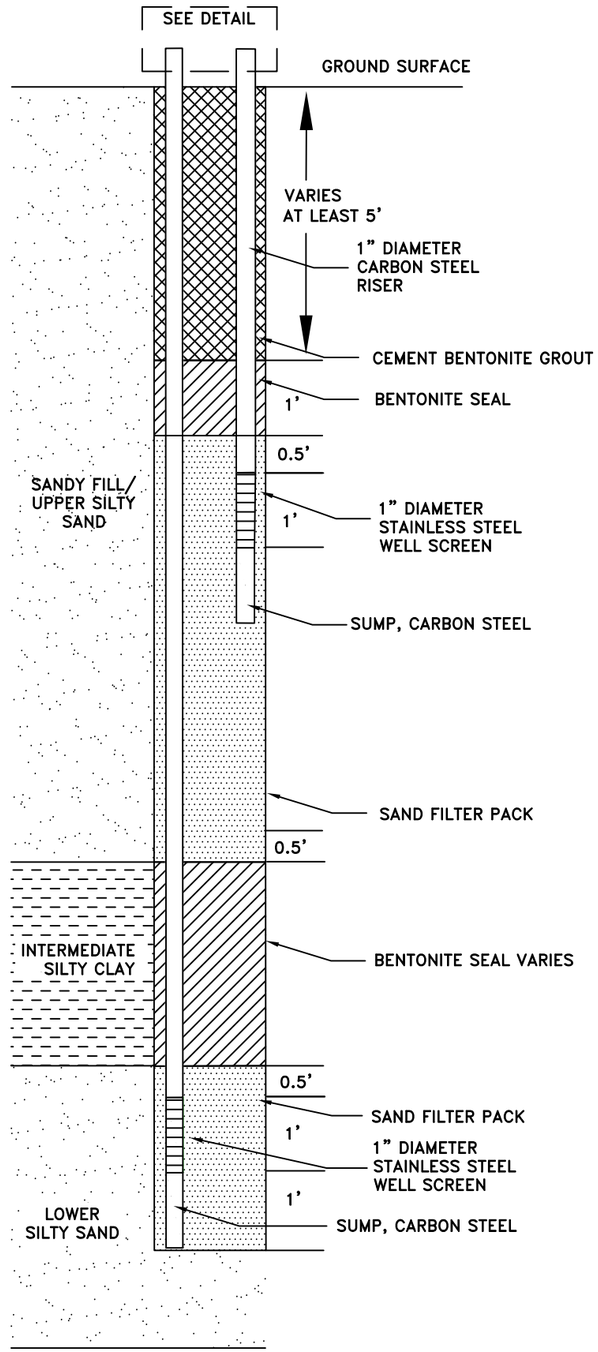

TYPICAL SINGLE VAPOR PROBE

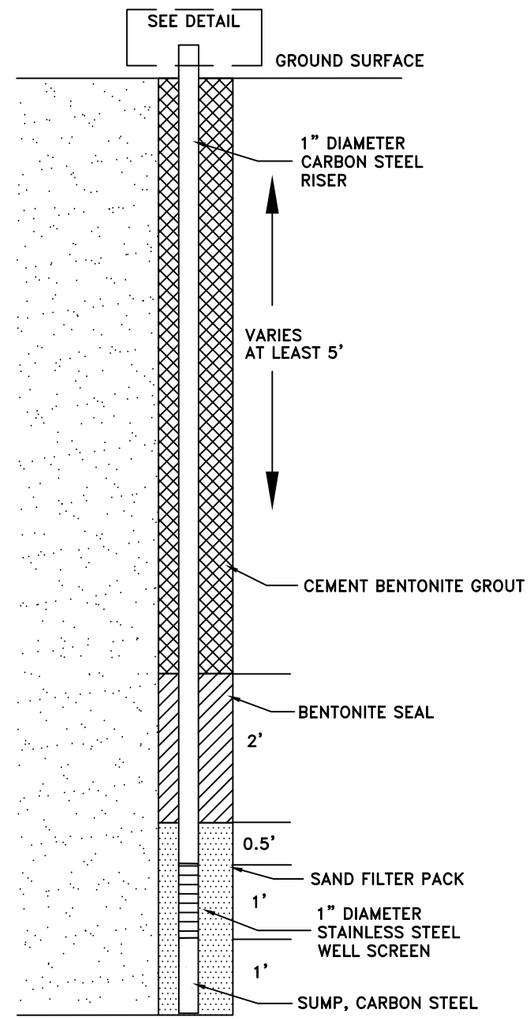

TYPICAL ABOVE GRADE VAPOR PROBE COMPLETION DETAIL

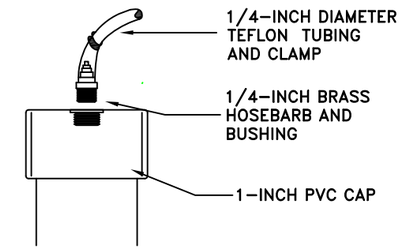

TYPICAL BELOW GRADE VAPOR PROBE DETAIL

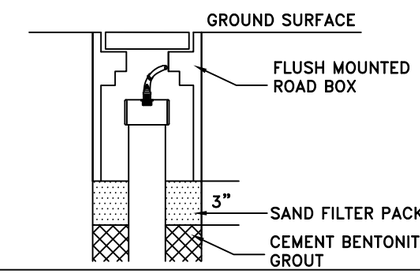

NOTE:

SVE = SOIL VAPOR EXTRACTION

XDD
STRATEGIC. ENVIRONMENTAL. SOLUTIONS.

SCALE: NOT TO SCALE	TITLE: WELL AND VAPOR PROBE DESIGN CROSS-SECTION W.G. KRUMMRICH FACILITY SAUGET, IL
DATE: SEPTEMBER 2011	
PROJECT NO.: 11002	
CLIENT: SOLUTIA INC.	
DRAWN BY: MF	DRAWING NO.: FIGURE 3
CHECKED BY: ELS	REV: 1
PROJ. MGMT. APPROVAL: SC	

APPENDIX A

System Startup/Shutdown Procedures and Operation Forms and Checklists

Pre-Start Checklists

Date Completed: _____
Operator Name (print) _____
Operator Signature _____

SVE/AI System and ThermOx Pre-Start Checklist

Step	Task	Check (X)
1.	Fully close the main manifold valves to the wellfield (GV 001).	
2.	Fully open the manual dilution valves (GV 101, GV 201, and GV 301) on the SVE blowers.	
3.	Fully open the AI blower bleed off valve (GV 901, GV 1001).	
4.	Start up both ThermOx units (refer to the Intellishare ThermOx Operations & Maintenance Guide in Appendix D). Follow the Intellishare Pre-Start Checklist for all pre-start up safety and operation checks.	
5.	Ensure the main process vapor inlet valve on each ThermOx inlet is fully open.	
6.	Start the SVE blower system(s) to be tested.	
7.	Turn the Hand/Off/Auto (HOA) switch to the "manual" position.	
8.	Briefly turn on the SVE/AI blowers and confirm proper rotation of the electrical motors.	
9.	Briefly turn on the water/product pumps and confirm proper rotation of the electrical motors.	
10.	Follow the Intellishare Pre-Start Checklist and confirm the proper rotation of each ThermOx unit motor.	
11.	Pressure Release Valve Test on SVE System: Conduct the following on the each of the three SVE systems independently. Manually close BV 001. With PDB 101 operating slowly close BV 101 on the ThermOx unit while observing the pressure at which the pressure relief valves (PRV 101 set at 1.9 psig) release. Continue process with PDB 201 and PDB 301.	
12.	Pressure Release Valve Test on AI System: Temporarily deactivate PS/PT 2001. Slowly close the bleed off valve (GV 901) until the pressure relief valve (PRV 901) releases (set point at 16 psig). Follow same procedure for GV 1001 and PRV 1001.	
13.	Vacuum Relief Valve Tests on SVE System: Conduct the following on each of the three SVE systems independently. Close Ball Valve on the inlet while Ball Valve 101 is open. Slowly close the ambient air inlet valves (GV 101) while observing the vacuum at which the vacuum relief valves (VRV 101, set at 16 in. Hg) release. Continue Process for line containing PDB 201 and PDB 301.	
14.	Complete Alarm-Trigger-Response Checklist to confirm proper PLC/control functions.	

ThermOx Pre-Start Checklist

Step	Task	Check (X)
1.	Start up each ThermOx unit (refer to the Intellishare ThermOx Operations & Maintenance Guide in Appendix D). Follow the Intellishare Pre-Start Checklist for all pre-start up safety and operation checks.	

Notes: _____

Alarm-Trigger-Response Checklist

Date Completed: _____
Operator Name (print) _____
Operator Signature _____

SVE System Blowers (PDB 101/201/301)

Step	Task	Check (X)
1.	VIA 101 or 201 or 301 Low/No Vacuum – Shut down PDB 101/201/301, respectively	
2.	FS 101 or 201 or 301 Low/No Flow (30 second delay on start of PDB 101/201/301) – Shut down PDB 101/201/301, respectively	
3.	PDB 101 or 201 or 301 HOA "Off" – Shut down PDB 101/201/301, respectively	
4.	PDB 101 or 201 or 301 – Motor thermal overload – Shut down PDB 101/201/301 respectively	
5.	If two blowers (PDB 101 or 201 or 301) shutdown for any alarm condition, then shutdown AC 901 and AC1001	
6.	TP 101 or 201 or 301 – Motor thermal overload – Shut down, TP 101/201/301 respectively, and PDB 101/201/301 respectively	
7.	TP 701 or 702 – Motor thermal overload – Shut down TP 701 or 702, and PDB 101/201/301, and AC 901/1001	
8.	PS/PT 401 High Pressure (set at 14 pisg) – Shut down PDB 101/201/301, AC 901/1001 and TP 201/301/701/702/703	
9.	FIA 401 – Shut down PDB 101/201/301 and AC 901/1001	
10.	TIA 001 – Shut down PDB 101/201/301 and AC 901/1001	

Notes: _____

Air Injection Blowers (AC 901/1001)

Step	Task	Check (X)
1.	TIA 901/1001 High Temperature (set at 200 Deg. F) – Shut down AC 901/1001	
2.	PS/PT 2001 High Pressure (set at 16 psig) – Shut down AC 901/1001	
3.	FS 901 or 1001 – No/Low Flow (30 second delay on start of AC 901/1001) – Shut down AC 901/1001, respectively	
4.	AC 901 or 1001 – Motor Thermal Overload – Shut down AC 901/1001 respectively	
5.	AC 901 or 1001 HOA "Off" – Shut down AC901/1001, respectively	
6.	FIA 401 – Shut down AC 901/1001	

Notes: _____

Liquid Level Transmitters

Step	Task	Check (X)
1.	LT 101 or LT 201 or LT 301 Actuated – AMS 101/AMS 201/AMS 301 Level Alarm – Shut off PDB 101/PDB 201/PDB 301/AC 901/AC 1001	
2.	LT 701 Actuated – OWS 701 Level Alarm – Shut off PDB 101/PDB 201/PDB 301/AC 901/AC 1001	
3.	LT 704 Actuated – NT 701 High, High Alarm – Shut down PDB 101/PDB 201/PDB 301, AC 901/AC 1001, ThermOx 501/ThermOx 601	

Notes: _____

System Interlocks

Step	Task	Check (X)
1.	TP 301 – OWS 701 Transfer Pump, Motor Thermal Overload – Shut down PDB 101, AC 901, AC 1001, ThermOx, TP 101, TP 201, TP 301	
2.	PS/PT 701 High Pressure (set at 1 psig) – Shut down PDB 101/201/301, AC 901/1001, TP 201/301/701/702/703/801 and AS 801	
3.	Interlock – SVE (PDB 101/201/301) ready/no-alarms to enable ThermOx startup	
4.	Interlock – ThermOx 501 or 601 must be ready/no alarms to enable SVE (PDB 101) startup	
5.	Interlock – ThermOx 501 or 601 alarm – Shut down entire system, do not allow restart until ThermOx 501/601 ready signal, respectively	
6.	Interlock – Power Failure – Do not restart system automatically after power restored (manual restart)	
7.	Interlock – Emergency Stop (Manual) – Shutdown entire system, manual system reset, emergency stop switch deactivation required	
8.	TSH 801 – Building high temperature (set at 120°F) – Shut down entire system, manual system reset required	
9.	LEL 701 High %LEL (set at 10% LEL) – Shut down entire system, manual system reset required	

Notes: _____

Refer to **Table 3** of OM&M for a complete description of all controls/alarms and other PLC program details

ThermOx Start-Up Procedure

Date Completed: _____
Operator Name (print) _____
Operator Signature _____

Step	Task	Check (X)
1.	Fully close the main manifold valves to the wellfield (GV 001).	
2.	Fully open the manual dilution valves (GV 101, GV 201, and GV 301) on the SVE blowers.	
3.	Close the SVE process inlet valve on each ThermOx unit.	
4.	Open the air-inlet dilution valve on each ThermOx unit.	
5.	Start up both ThermOx units (refer to the Intellishare ThermOx Operations & Maintenance Guide in Appendix D)	

Notes: _____

SVE System Start-Up Procedure

Date Completed: _____
Operator Name (print) _____
Operator Signature _____

Step	Task	Check (X)
1.	Start up both ThermOx units (refer to the Intellishare ThermOx Operations & Maintenance Guide in Appendix D)	
2.	Fully close the main manifold valves to the wellfield (GV 101, GV 102, and GV 201).	
3.	Fully open the manual dilution valves (GV 101, GV 201, GV 301) on the SVE blowers.	
4.	Open the SVE process inlet valve on each ThermOx unit.	
5.	Use the HOA switch in "Auto" mode to start the SVE blower(s).	
6.	Confirm Wellhead valve configuration/confirm proper valve settings for the individual SVE wells.	
7.	Slowly close the air-inlet dilution valve on each ThermOx unit (per the Intellishare ThermOx Operations & Maintenance Guide in Appendix D).	
8.	Slowly open the main manifold valve (GV 001).	
9.	Slowly close the air-inlet dilution valves (GV 101, GV 201, and GV 301)* on the SVE system. Monitor the operating conditions of both ThermOx units closely during this process (per the Intellishare ThermOx Operations & Maintenance Guide in Appendix D).	
*	It may not be possible to fully close the air-inlet dilution valve depending on the configuration of the SVE system(s)	

Notes: _____

AI Start-Up Procedure

Date Completed: _____
Operator Name (print) _____
Operator Signature _____

Step	Task	Check (X)
1.	Fully open the AI blower bleed off valves (GV 901 and GV 1001).	
2.	Ensure that the well inlet valve (GV 2001) is fully open.	
3.	Ensure that all AI wellhead valves to be operated are fully opened (first time start up only).	
4.	Use the HOA switch in "Auto" mode to start the AI blower.	
5.	Slowly close the bleed off valves (GV 901 and GV 1001) to begin air injection into wellfield.	
6.	Adjust well field inlet valve (GV 2001) as needed to achieve the desired total injection rate/pressure to the manifold.	

Notes: _____

Standard Shut-Down Procedures

Date Completed: _____
Operator Name (print) _____
Operator Signature _____

Step	Task	Check (X)
1.	Slowly open the air-inlet dilution valve on each ThermOx unit to compensate for reduced air flow when the SVE blowers are shut off. (This step is not required if only shutting off the AI system).	
2.	Shut off the SVE/AI process equipment by using the associated HOA switches. Be aware that during this process, the air flow and vacuums/pressure will change which may affect the operating status of each ThermOx unit (refer to step 1 above).	
3.	Shut down each ThermOx unit (refer to the Intellishare ThermOx Operations & Maintenance Guide in Appendix D)	
4.	Shut off the main water discharge line from the process equipment (BV 720) if the system will be off for an extended period of time.	

Notes: _____

Emergency Shut-Down Procedures

Date Completed: _____
Operator Name (print) _____
Operator Signature _____

ThermOx Emergency Shut-Down

Step	Task	Check (X)
1.	Press the SYSTEM STOP button on ThermOx Control Panel.	
2.	Close the supply valve for the natural gas fuel source (if safe to do so).	
3.	Refer to the Intellishare ThermOx Operations & Maintenance Guide in Appendix D for additional information on system shut down procedures.	

SVE/AI Emergency Shut-Down

Step	Task	Check (X)
1.	Press the EMERGENCY STOP button located within the equipment container or by shutting the system off at the SVE/AI control panel.	
2.	A signal should automatically be sent to shut off each ThermOx unit.	
3.	Close the natural gas fuel inlet valve on each ThermOx unit and the main natural gas supply valve located at the supply line manifolds.	

Natural Gas Supply Tanks Shut Off

Step	Task	Check (X)
1.	If a leak is detected, and only if safe to do so, close the main supply valve at the natural gas supply line manifold.	
2.	Each ThermOx unit will shut down automatically.	
3.	The SVE/AI system will shut down automatically.	

Notes: _____

System Maintenance Checklist

Date Completed: _____
Operator Name (print) _____
Operator Signature _____

GENERAL SAFETY PROCEDURES BEFORE CONDUCTING SITE OPERATIONS:

1. Always check-in/sign-in with the facility upon arrival, mid-shift, and upon leaving the site.
2. Facility will supply a two-way radio with a "man-down" signal button.
3. Use required Personal Protective Equipment (PPE) per Site HASP.
4. Monitor breathing zone with a PID (per Section 6.0 of this OM&M Manual, and the Site HASP), before entering the system equipment container per the Site HASP.
5. An eye-wash station is located on the inside of the personnel door of the equipment shed, ensure it is operable before conducting site maintenance operations (see checklist below).
6. Before performing equipment maintenance, power down the appropriate equipment. Use proper Lock-Out/Tag-Out procedures, per the Site HASP, that are appropriate for the task.
7. Monitor breathing zone with a PID during maintenance procedures that may result in vapor release (e.g., NAPL pump repair, air or bag filter element replacement, repair/replacement of manifold piping, cleaning level sensors, etc.), and follow appropriate action levels (per Section 6.0 of this OM&M Manual, and the Site HASP).
8. Ensure personnel vehicle is equipped with an ABC fire extinguisher, of proper size (per Solutia requirements). A dedicated fire extinguisher is also mounted on the inside of the personnel door (do not remove).
9. Ensure that a personal first aid kit is available, and is fully equipped and non-expired.

Maintenance Safety Checklist

Item	Task	Frequency	Check (X)
1.	Read LEL of ambient air in equipment trailer with LEL meter (located on exterior control panel). Confirm non-detect, or follow action levels/response procedures provided in Section 6.0 of this manual, and the Site HASP. ENTER PID MEASUREMENT: _____(ppmv).	Daily	
2.	Check condition of eyewash station per mfg's specifications, and ensure saline solution is full, and not expired (fill out log sheet to be kept with eye wash station). Refill solution as needed.	Once per Site visit	
3.	Check condition of fire extinguishers, and record on inspection tags (use supplied inspection tags, or use inspection forms in Appendix A of the Site HASP). Replace/recharge immediately if required.	Per Mfg. Req.	
4.	Check condition of first aid kits (use inspection forms in Appendix A of the Site HASP). Replace immediately if required.	Per Mfg. Req.	

Notes: _____

Date Completed: _____
Operator Name (print) _____
Operator Signature _____

Monthly Maintenance Checklist

Item	Task	Issue? (N/Y)
1.	Complete Safety Checklist (above)	
Physical Inspections: Check for signs of physical damage, chemical reaction/corrosion, discoloring, heat related stress, deformation, or leaks, etc. for the following equipment. Indicate "no issues" (N), or "issues/damage observed" (Y), and describe issue in detail below in the notes section.		
1.	Wellheads and wellhead instrumentation (valves, sample ports)	
2.	Field manifold piping systems	
3.	VOC concentrations within equipment shed (via LEL701)	
4.	Temperature inside equipment shed	
5.	Process piping inside equipment shed	
6.	Relief devices (e.g. pressure and vacuum relief valves)	
7.	Rotating equipment (e.g. motors and belts)	
8.	External piping/flex hose connecting ThermOx.	
9.	Integrity of ThermOx and NAPL drum/secondary containment.	
10.	Integrity of ThermOx exhaust stacks	
11.	Process instrumentation (leaks, damage, check that digital readouts operable, etc.)	
12.	Excessive heat in the equipment container, exhaust fan operating (thermostatically controlled).	
13.	(During cold weather only) heater operational	
14.	Signs of leaks (vapor, liquid drips, puddles, or staining on piping/floors)	
15.	Signs of piping degradation (via chemical reaction, corrosion or heat-related stress)	
16.	Discharge water line to sanitary sewer, and pipe road protector condition	
17.	*(Enter other by Sys. Op.)*	
Notes:		
Mechanical Inspections: Check process monitoring data and perform equipment specific maintenance as per the manufacturers' recommendations. Visual inspection required for all monthly checks. Check off that inspection was performed, and indicate (Y) yes or (N) no if maintenance is required and performed. Describe the steps taken in the notes section.		

Item	Task	Frequency	Check (X)/(Y/N)
1.	Complete Process Monitoring Log (Appendix A of OM&M Manual)	Monthly	
2.	SVE Blower (PDB 101/201/301) – check process monitoring data (TI 101/201/301, VI 101/201/301, FM 101/201/301) to ensure operating within normal range. Check HM 101/201/301 for run time and perform mfg's recommended maintenance if required.	Monthly	/
3.	Air Injection Blower (AC 901, AC 1001) – check process monitoring data (TIA 901/1001, PI 901/1001, FM 901/1001, TIA 901/1001, PI 901/1001, FM 1002) to ensure operating within normal range. Check HM 901 and HM 1001 for run time and perform mfg's recommended maintenance if required. Check AFS 901 and AFS 1001 for excessive head loss (at VI 901 and VI 1001), and perform mfg's recommended maintenance if required	Monthly /Per Mfg. Req.	/
4.	Transfer Pump (TP 101, TP 201, and TP 301) - Check HM 101, HM 201, HM 301 for run time and perform mfg's recommended maintenance if required.	Monthly /Per Mfg. Req.	/
5.	Perform ThermOx maintenance per Intellishare's Operation & Maintenance Guide in Appendix D of this manual	Per Mfg. Req.	/
6.	Air Particulate Filters (AF 101, APF 201, and APF 301) – check head loss across filter (VI 102/103, VI 202/203, and VI 302/303) and perform mfg's recommended maintenance if required.	Per Mfg. Req.	/
7.	Bag Filter 701 – check head loss across filter (PI 701/702)and perform mfg's recommended maintenance if required.	Per Mfg. Req.	/
8.	Check for carbon vent unit breakthrough (Enter PID Readings): PRV Unit_____ OWS 701 Vent Unit_____	Monthly	/
9.	*(Enter other by Sys. Op.)*		/
10.	*(Enter other by Sys. Op.)*		/
Other Maintenance Items:			
1.	Check regulator failure light and pressure indicators on natural gas lines of each ThermOx unit	Monthly	

Notes: _____

NAPL Transfer Pump Operation Procedures

Date Completed: _____
Operator Name (print) _____
Operator Signature _____

IMPORTANT: Before transferring NAPL to the NAPL storage drum:

Level C respiratory protection (half- or full-face air purifying respirator) is required for NAPL transfer and when connecting or disconnecting the NAPL transfer hose/vent line.

Prepare the NAPL Storage Drum and Transfer Hose for NAPL Transfer

Step	Task	Check (X)
1.	Prepare a new drum: a. Remove the inlet bung on the NAPL storage drum. b. Attach the cam-lock/ball valve assembly * to the inlet bung via the threaded (to be of all steel) connections using Teflon tape.	
2.	Ready the chemical-compatible hose system (Transfer Hose) and inspect for leaks or signs of wear.	
3.	Connect one end of the Transfer Hose system to the 1-inch galvanized steel discharge pipe from the NAPL product pump (TP702). The outlet of the discharge pipe (located to the right of the equipment container personnel door) will be equipped with a cam-lock fitting.	
4.	Connect the other end of the Transfer Hose system to the cam-lock fitting assembly that is connected to the NAPL storage drum inlet.	
5.	Ensure that the weight of the connected hose does not apply excessive strain to the fitting assembly on the drum inlet.	
*	This assembly remains attached to the NAPL drum until drum is full. The assembly will be fully closed at all times unless actively filling the drum.	

Connect the NAPL Storage Drum Ventilation System

Step	Task	Check (X)
1.	Remove the vent bung of the NAPL storage drum.	
2.	Connect the vent bung cam-lock fitting assembly to the NAPL storage drum using Teflon tape.	
3.	Connect the flexible vent piping system to the appropriate carbon vent unit. Note: the NAPL storage drum will be vented in common with the vent for the Oil Water Separator unit using a tee fitting.	

Prepare the NAPL Tank/Product Pump Valves for Transfer

Step	Task	Check (X)
1.	Confirm that the chemical transfer hose cam-lock/ball valve fittings are fully engaged on both ends.	
2.	Ensure the following process valves are fully opened: a. BV 722/723 (outlet valve of NAPL Tank/inlet isolation valve on TP 702) b. BV 724 (outlet isolation valve for TP 702) c. BV 725 (final outlet valve for the discharge pipe prior to penetrating the container wall).	
3.	Note that the NAPL Tank in the Oil Water Separator has a maximum capacity of 14 gallons.	

Prepare the NAPL Tank/Product Pump Valves for Transfer (continued)

Step	Task	Check (X)
4.	BEFORE turning on the NAPL product pump (TP 702) ensure that there is sufficient capacity in the NAPL storage drum to receive the NAPL (maximum useable capacity of approximately 50 gallons). A NAPL accumulation log will be kept with each drum to aid in this determination.	
5.	Gauge the product level and record the level on the NAPL accumulation log.	
6.	Avoid overfilling. Ensure at least 3 inches of unfilled head space remain in the drum.	

Begin NAPL Product Transfer

Step	Task	Check (X)
1.	Use the "Hand/Off" (HO) switch in manual or "Hand-Operated" mode to operate the product pump.	
2.	Listen for signs of the pump running dry, as there is no automatic shut off for TP 702.	
3.	When the NAPL tank is drained/pump begins to run dry, immediately turn off TP 702.	
4.	Close BV 722/723, BV 724/725.	

Disconnect the Transfer Hose

Step	Task	Check (X)
1.	Allow the Transfer Hose to fully drain into the NAPL storage drum.	
2.	Close the ball valve, and disengage the cam-lock on the inlet end of the Transfer Hose.	
3.	Close the ball valve on the NAPL storage drum	
4.	Log the amount of product transferred on the System Operation Summary Form, Appendix A.	
5.	Replace the protective rain cover over the NAPL storage drum and secondary containment unit.	

Disconnect the NAPL Storage Drum Ventilation System

Step	Task	Check (X)
1.	Close the ball valves located on each end of the ventilation hose.	
2.	Disconnect the flexible vent piping system using the cam-lock fittings	

NAPL Drum Change-Out/Movement Procedures

Step	Task	Check (X)
1.	Once full, seal and label the drum.	
2.	Move the drum to the designated hazardous waste accumulation area.	
3.	Obtain a new drum from Solutia.	
4.	Visually inspect and prepare the drum for initial use.	
5.	Fill out the Weekly Drum Inspection Checklist (Appendix A)	

Notes: _____

Process Monitoring Log - SVE System

XDD, LLC, 22 Marin Way, Unit 3, Stratham, NH 03885
Tel: (603) 778-1100 Fax: (603) 778-2121

Date: _____ Time: _____
Page _____ of _____
Personnel: _____

Combined Influent SVE Line			
Temp.	(°F)	TIA 001	
Vac	("Hg)	VI 001	
Flow	(cfm)	FM 001	
PID - VOCs	(ppm)	SP 001	

TP 101			
Press Out	(psi)	PI 102	
Run Hours	(hours)	HM 102	

TP 201			
Press Out	(psi)	PI 202	
Run Hours	(hours)	HM 202	

TP 301			
Press Out	(psi)	PI 302	
Run Hours	(hours)	HM 302	

OWS 701 Effluent			
Press BPF Inlet	(psi)	PI 701	
Press BPF Outlet	(psi)	PI 702	
Flow Totalizer	(gal)	FT 701	
Run Hours	(hours)	HM 701	
Water Sample Collected (Y/N)?		SP 701	
Run Hours	(hours)	HM 702	

LGAC 701			
Pres out	(psi)	PI 703	
Water Sample Collected (Y/N)?		SP 702	

LGAC 702			
Pres out	(psi)	PI 704	
Water Sample Collected (Y/N)?		SP 703	

PDB 101 Skid							
Post AMS 101				Pre- and Post-PDB 101			
Vac Out	("Hg)	VI 101		Vac In	("Hg)	VI 103	
Vac Out (analog)	("Hg)	VIA 101		Temp. Out	(°F)	TI 102	
Temp. Out	(°F)	TI 101		Flow	(cfm)	FM 102	
Flow	(cfm)	FM 101		Press Out	(psi)	PI 101	
PID - VOCs	(ppm)	SP 101		PID - VOCs	(ppm)	SP 102	
Post-APF 101				Run Hours	(hours)	HM 101	
Vac In	("Hg)	VI 102					

PDB 201 Skid							
Post AMS 201				Pre- and Post-PDB 201			
Vac Out	("Hg)	VI 201		Vac In	("Hg)	VI 203	
Vac Out (analog)	("Hg)	VIA 201		Temp. Out	(°F)	TI 202	
Temp. Out	(°F)	TI 201		Flow	(cfm)	FM 202	
Flow	(cfm)	FM 201		Press Out	(psi)	PI 201	
PID - VOCs	(ppm)	SP 201		PID - VOCs	(ppm)	SP 202	
Post-APF 101				Run Hours	(hours)	HM 201	
Vac In	("Hg)	VI 202					

PDB 301 Skid							
Post AMS 301				Pre- and Post-PDB 301			
Vac Out	("Hg)	VI 301		Vac In	("Hg)	VI 303	
Vac Out (analog)	("Hg)	VIA 301		Temp. Out	(°F)	TI 302	
Temp. Out	(°F)	TI 301		Flow	(cfm)	FM 302	
Flow	(cfm)	FM 301		Press Out	(psi)	PI 301	
PID - VOCs	(ppm)	SP 301		PID - VOCs	(ppm)	SP 302	
Post-APF 101				Run Hours	(hours)	HM 301	
Vac In	("Hg)	VI 302					

Combined Effluent SVE Line			
Temp.	(°F)	TI 401	
Press Out	(psi)	PI 401	
Flow	(cfm)	FM 401	
Flow (analog)	(ΔP)	FIA 401	
PID - VOCs	(ppm)	SP 401	

Notes:

Process Monitoring Log - AI System

XDD, LLC, 22 Marin Way, Unit 3, Stratham, NH 03885
Tel: (603) 778-1100 Fax: (603) 778-2121

Date: _____ Time: _____
Page _____ of _____
Personnel: _____

AI 901 Skid			
Temp. In	(^{o}F)	TI 901	
Vac In	(psi)	VI 901	
Temp. Out	(^{o}F)	TI 902	
Temp. Out (analog)	(^{o}F)	TIA 901	
Pres Out	(psi)	PI 901	
Flow	(cfm)	FM 901	
Run Hours	(hours)	HM 901	

AI 1001 Skid			
Temp. In	(^{o}F)	TI 1001	
Vac In	(psi)	VI 1001	
Temp. Out	(^{o}F)	TI 1002	
Temp. Out (analog)	(^{o}F)	TIA 1001	
Pres Out	(psi)	PI 1001	
Flow	(cfm)	FM 1001	
Run Hours	(hours)	HM 901	

Combined Effluent AI Line			
Temp. Out	(^{o}F)	TI 2001	
Pres Out	(psi)	PI 2001	
Pres Out (anaog)	(psi)	PT 2001	
Flow	(cfm)	FM 2001	
Flow (analog)	(cfm)	FIA 2001	

Notes:

SVE Performance Monitoring Log

XDD, LLC, 22 Marin Way, Unit 3, Stratham, NH 03885
Tel: (603) 778-1100 Fax: (603) 778-2121

Date: _____ Time: _____
Page _____ of _____
Personnel: _____

Instructions: Monitor sample ports and fill in PID readings (in ppmv) at time of collection of vapor sample for laboratory analysis

PDB 101 Skid	
SP 101	

PDB 201 Skid	
SP 201	

PDB 301 Skid	
SP 301	

Post-PDB 101	
SP 102	

Post-PDB 101	
SP 202	

Post-PDB 101	
SP 302	

Dilution Air Open at GV 101, GV 201, and GV 301? (Y/N) _____

Combined Vapor Effluent	
SP 401	

Flow Measurements (Enter Units _____)		
PDB 101 Assembly Skid	FM 101	
PDB 201 Assembly Skid	FM 201	
PDB 301 Assembly Skid	FM 301	
Post Blower (PDB 101)	FM 102	
Post Blower (PDB 201)	FM 202	
Post Blower (PDB 301)	FM 302	
Combined PCB 101, PCB 201, and PCB 301 Effluent	FM/FIA 401	
Calibration Notes:		

ThermOx Effluent	
SP 501	
Vapor Sample Collected (Y/N)?	

PID Instrument Model: _____

PID Cal. Gas/Conc.(ppmv): _____

PID Cal. Reading (ppmv): _____

Notes:

Well Field Monitoring Log

XDD, LLC, 22 Marin Way, Unit 3, Stratham, NH 03885

Tel: (603) 778-1100 Fax: (603) 778-2121

Date: _____ Time: _____

Page _____ of _____

Personnel: _____

PID Instrument Model: _____

PID Cal. Gas / ppmv: _____

PID Cal. Reading (ppmv): _____

Pressure / Vacuum Gauge Type/Model: _____

Flow Meter Type/Model: _____

Manifold ID	PDB 101	PDB 201	PDB 301	Combined effluen	Enter Units	Notes:
Flow Rate						
Vacuum (-) / Pressure (+)						
PID					ppmv	

No.	Well or Vapor Point ID	Time	Flow Rate		Vacuum (-) / Pressure (+)		PID (ppmv)	Notes
			Value	Enter Units	Value	Enter Units		
1								
2								
3								
4								
5								
6								
7								
8								
9								
10								
11								
12								
13								
14								
15								
16								
17								
18								
19								
20								
21								
22								
23								
24								
25								

Notes:

Water / NAPL Monitoring Log (Cumulative Log - Leave Copy In Trailer)

XDD, LLC, 22 Marin Way, Unit 3, Stratham, NH 03885
Tel: (603) 778-1100 Fax: (603) 778-2121

Start Date: _____ Time: _____
Page _____ of _____
Personnel: _____

No.	Date	Time	Water Recovery Log		NAPL Recovery Log		Notes:
			Totalizer (Gallons)	Transfer Pump Run Time (Hours)	NAPL Tank Effluent	Cumulative Drum Vol.	
			FT 701	HM 701	(Est. Gal)	(Est. Gal)	
1							
2							
3							
4							
5							
6							
7							
8							
9							
10							
11							
12							
13							
14							
15							
16							
17							
18							
19							
20							
21							
22							
23							
24							
25							
26							
27							
28							
29							
30							

Notes:

Water Level Monitoring Log (Cumulative Log - Leave Copy In Trailer)

XDD, LLC, 22 Marin Way, Unit 3, Stratham, NH 03885
Tel: (603) 778-1100 Fax: (603) 778-2121

Start Date: ________ Time: ________
Page ________ of ________
Personnel: ____________________

Date	Time	Depth to water (ft bgs)								Notes:
		BSA-MW-1S	Other: ______	Other: ______	Other: ______	Other: ______	Other: ______	Other: ______	Other: ______	

Notes:
ft toc = feet below top of casing
*BSA-MW-01S (Figure 4A): screen interval = 19.68 - 24.68 ft below ground surface (ft bgs); casing elevation (NAVD 88) = 412.31 ft above mean sea level (ft msl)

Satellite Accumulation Area Weekly Inspection Log (Cumulative Log - Leave Copy In Trailer)

XDD, LLC, 22 Marin Way, Unit 3, Stratham, NH 03885
Tel: (603) 778-1100 Fax: (603) 778-2121

Start Date: _____ Time: _____
Page _____ of _____
Personnel: _____

Inspection Date	Label on Drum	Date on Label	Label Complete and Legible?	Drum Lid/Bung Secured?	Any leaks?	Waste Compatible with Container?	<55 total gallons in SAA	Inspected By

Notes:
SAA = Satellite Accumulation Area

AIR SPARGING AND SOIL VAPOR EXTRACTION
EQUIPMENT SET POINTS
BIG MO SVE TREATMENT SYSTEM
W.G. KRUMMRICH FACILITY, SAUGET, IL

					Adjustment Date/Value										
System	**Alarm**	**Description**	**Design Set Point**	**Units**	*Date*	*Date*	*Date*	*Date*	*Date*	*Date*	*Date*	*Date*	*Date*	*Date*	*Date*
	PS/PT401	Analog High Pressure Switch and Indicator	0.5	PSI											
	PS/PT701	Analog High Pressure Switch and Indicator	22	PSI											
	TIA001	Analog Influent High Temperature Switch and Indicator	32 to 248	^{o}F											
	VIA101	Analog Low Vacuum Switch and Indicator	1	"Hg											
	VIA201														
	VIA301														
	PRV101	Mechanical Pressure Relief Valve	1	PSI											
	PRV201														
	PRV301														
	VRV101	Mechanical Vacuum Relief Valve	17	"Hg											
	VRV201														
	VRV301														
AI	PS/PT2001	Analog Low Pressure Switch and Indicator	1	psi											
		Analog High Pressure Switch and Indicator	8	psi											
	PRV901	Mechanical Pressure Relief Valve	9	psi											
	PRV1001														
	TIA 901	Analog High Temperature Switch and Indicator	140	^{o}F											
	TIA 1001														
Thermal Oxidizers[1]	TAL1	Low Operating Temperature Switch and Indicator	1400	^{o}F											
	TAH1	High Operating Temperature Switch and Indicator (Bypass)	1600	^{o}F											
		High Operating Temperature Switch and Indicator (HX)	1550	^{o}F											
	ASH1	Lower Explosive Limit Meter	40%LEL												
General Trailer	LEL701	Lower Explosive Limit Meter	10%LEL												
	TSH801	Trailer Interior Temperature High Switch	120	^{o}F											

NOTES:

[1] ThermOx set points may only be modified in accordance with Intellishare's OM&M plan and will likely be modified by Intellishare personnel during the addition of the catalyst and activation of the heat exchanger.
psi = pounds per square inch
"Hg = inches of mercury
"H2O = inches of water
°F = degrees Fahrenheit
HX = heat exchanger mode

APPENDIX B

Process and Instrumentation Diagrams (P&ID) and Drawings

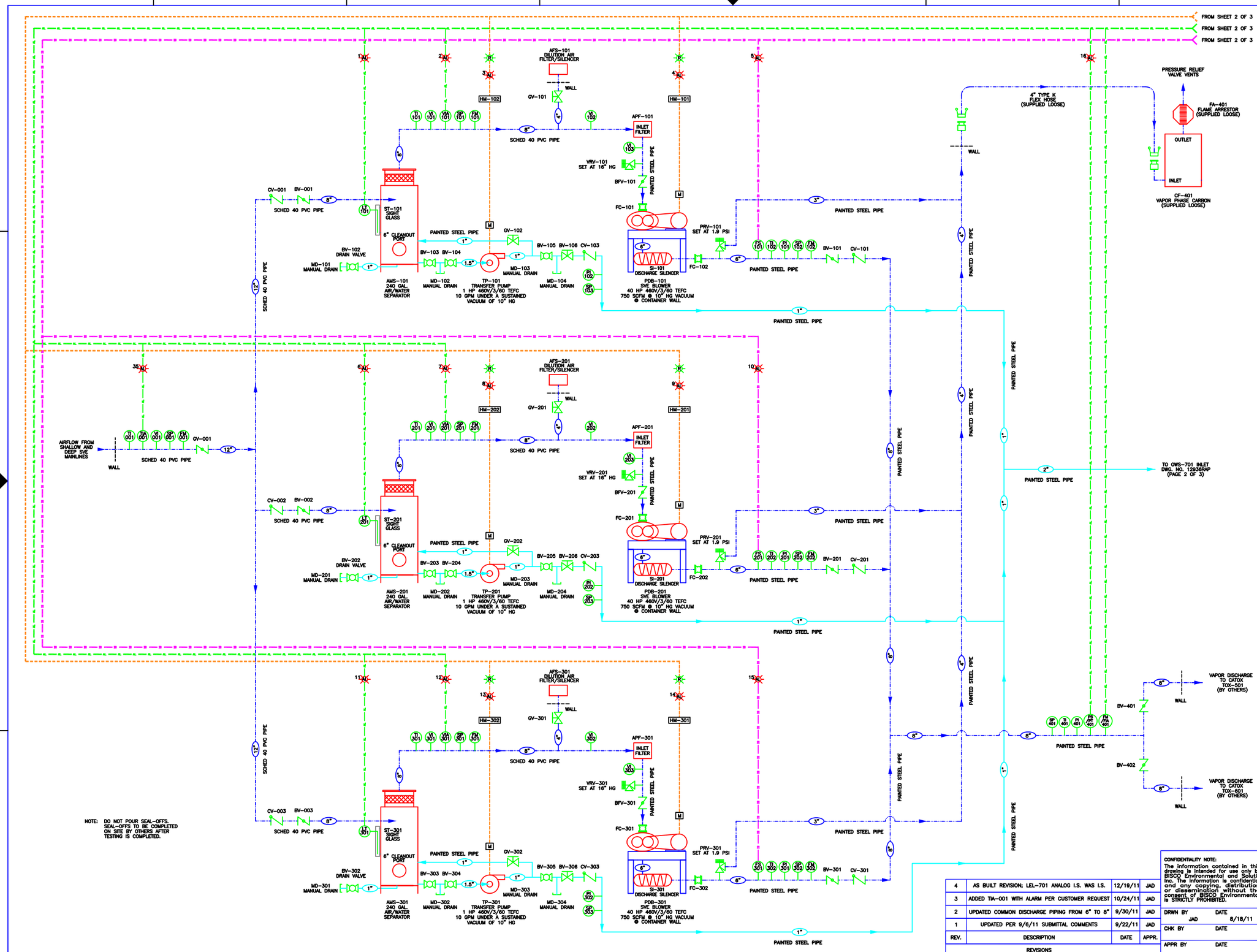

NOTE: DO NOT POUR SEAL-OFFS. SEAL-OFFS TO BE COMPLETED ON SITE BY OTHERS AFTER TESTING IS COMPLETED.

LEGEND

AC	AIR COMPRESSOR
AFS	AIR FILTER/SILENCER
AMS	AIR MOISTURE SEPARATOR
APF	AIR PARTICULATE FILTER
BFV	BUTTERFLY VALVE
BPF	BAG PARTICULATE FILTER
BV	BALL VALVE
CF	CARBON FILTER (VAPOR PHASE)
CO	CLEAN OUT
CV	CHECK VALVE
DD	DRY DISCONNECT
FA	FLAME ARRESTOR
FC	FLEX CONNECTOR
FH	FLEXIBLE HOSE
FIA	FLOW INDICATOR ANALOG
FM	FLOW METER
FS	FLOW SWITCH
FT	FLOW TRANSMITTER
GV	GATE VALVE
HM	HOUR METER
LEL	LOWER EXPLOSIVE LIMIT
LGAC	LIQUID PHASE CARBON
LT	LEVEL TRANSMITTER
M	MOTOR
MCP	MASTER CONTROL PANEL
MD	MANUAL DRAIN
NS	NAPL STORAGE
NT	NAPL TANK
OIT	OPERATOR INTERFACE TERMINAL
OWS	OIL WATER SEPARATOR
PDB	POSITIVE DISPLACEMENT BLOWER
PI	PRESSURE INDICATOR
PLC	PROGRAMMABLE LOGIC CONTROLLER
PS	PRESSURE SWITCH
PT	PRESSURE TRANSMITTER
PRV	PRESSURE RELIEF VALVE
QCV	QUICK CONNECT VALVE
SI	SILENCER
SP	SAMPLE PORT
ST	SITE TUBE
TI	TEMPERATURE INDICATOR
TIA	TEMPERATURE INDICATOR ANALOG
TOX	THERMAL OXIDIZER
TP	TRANSFER PUMP
TSH	TEMPERATURE SWITCH HIGH
VI	VACUUM INDICATOR
VIA	VACUUM INDICATOR ANALOG
VRV	VACUUM RELIEF VALVE
PS/PT	PRESSURE SWITCH / PRESSURE TRANSMITTER
	BALL VALVE
	BUTTERFLY VALVE
	CHECK VALVE
	GATE VALVE
	RELIEF VALVE
	VACUUM BREAKER
	MALE CAMLOCK
	FEMALE CAMLOCK
	PLUGGED TEE (MANUAL DRAIN)
	FLAME ARRESTER
AL	ALARM LIGHT
AL	WARNING LIGHT
E	EMERGENCY STOP
R	RUN LIGHT
	AIR LINE
	INTRINSICALLY SAFE ANALOG LINE
	INTRINSICALLY SAFE LINE
	CONTROL LINE
	WATER LINE
	BREAK

ALARMS

1. AIR MOISTURE SEPARATOR (AMS-101) HIGH HIGH LEVEL
2. SVE BLOWER (PDB-101) LOW VACUUM
3. TRANSFER PUMP (TP-101) MOTOR OVERLOAD
4. SVE BLOWER (PDB-101) MOTOR OVERLOAD
5. SVE BLOWER (PDB-101) LOW FLOW
6. AIR MOISTURE SEPARATOR (AMS-201) HIGH HIGH LEVEL
7. SVE BLOWER (PDB-201) LOW VACUUM
8. TRANSFER PUMP (TP-201) MOTOR OVERLOAD
9. SVE BLOWER (PDB-201) MOTOR OVERLOAD
10. SVE BLOWER (PDB-201) LOW FLOW
11. AIR MOISTURE SEPARATOR (AMS-301) HIGH HIGH LEVEL
12. SVE BLOWER (PDB-301) LOW VACUUM
13. TRANSFER PUMP (TP-301) MOTOR OVERLOAD
14. SVE BLOWER (PDB-301) MOTOR OVERLOAD
15. SVE BLOWER (PDB-301) LOW FLOW
16. COMBINED SVE SYSTEM DISCHARGE HIGH PRESSURE
35. COMBINED SVE INFLUENT HIGH TEMPERATURE

REV.	DESCRIPTION	DATE	APPR.
4	AS BUILT REVISION; LEL-701 ANALOG I.S. WAS I.S.	12/19/11	JAD
3	ADDED TIA-001 WITH ALARM PER CUSTOMER REQUEST	10/24/11	JAD
2	UPDATED COMMON DISCHARGE PIPING FROM 6" TO 8"	9/30/11	JAD
1	UPDATED PER 9/6/11 SUBMITTAL COMMENTS	9/22/11	JAD

REVISIONS

CONFIDENTIALITY NOTE:
The information contained in this drawing is intended for use only by BISCO Environmental and Solutia Inc. The information is confidential and any copying, distribution or dissemination without the consent of BISCO Environmental is STRICTLY PROHIBITED.

BISCO Environmental
Soil & Groundwater Remediation Equipment
Taunton, Massachusetts 02780

TITLE
VAPOR EXTRACTION & AIR INJECTION SYSTEM PROCESS & INSTRUMENTATION DIAGRAM

DRWN BY JAD	DATE 8/18/11	
CHK BY	DATE	
APPR BY	DATE	

SOLUTIA INC.
W.G.KRUMMRICH FACILITY – SAUGET, IL

JOB NO. 12936

SCALE	SIZE	DWG NO.	SHEET	REV
N/A	D	12936RAP	1 OF 3	4

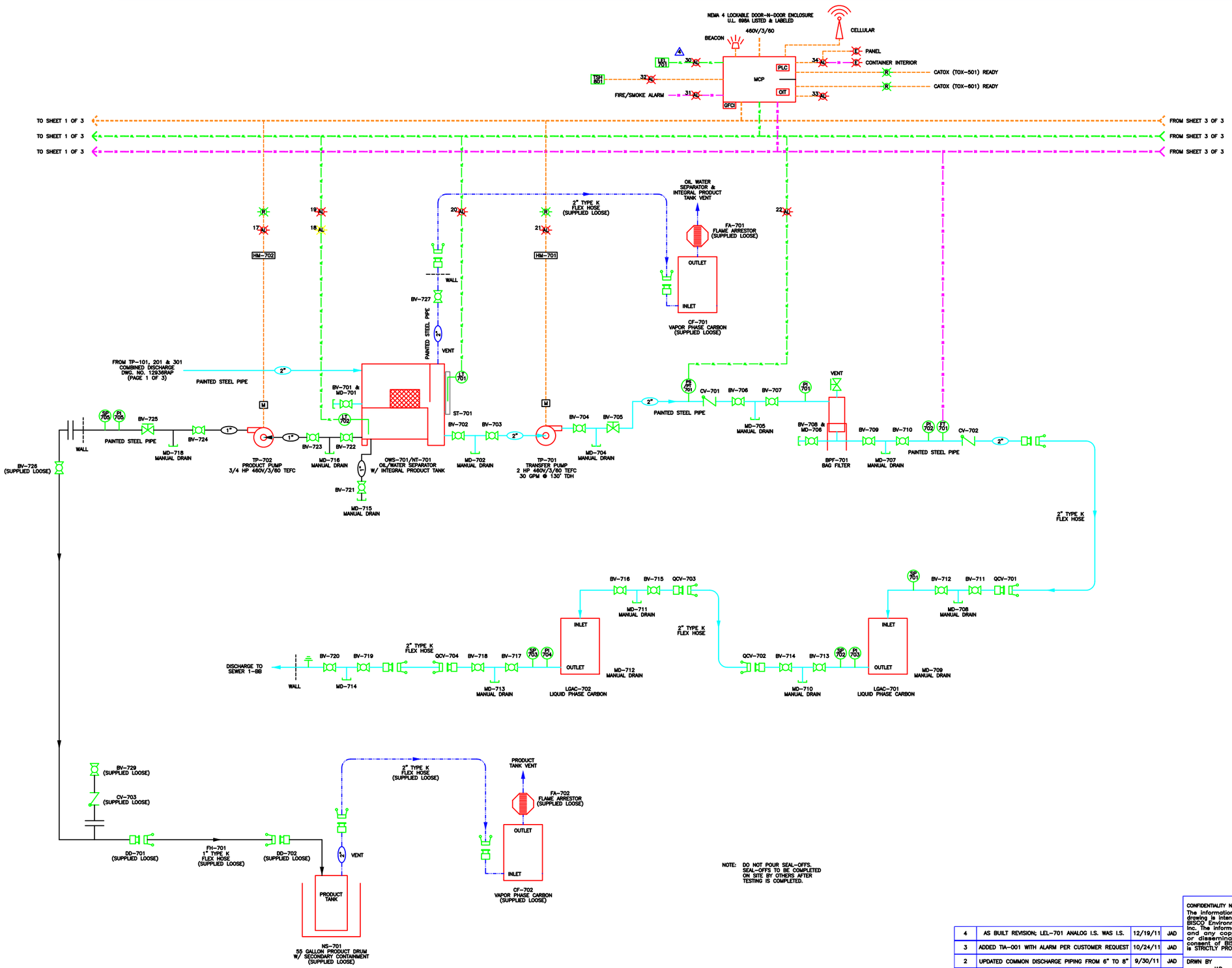

NOTE: DO NOT POUR SEAL-OFFS. SEAL-OFFS TO BE COMPLETED ON SITE BY OTHERS AFTER TESTING IS COMPLETED.

LEGEND

AC	AIR COMPRESSOR
AFS	AIR FILTER/SILENCER
AMS	AIR MOISTURE SEPARATOR
APF	AIR PARTICULATE FILTER
BFV	BUTTERFLY VALVE
BPF	BAG PARTICULATE FILTER
BV	BALL VALVE
CF	CARBON FILTER (VAPOR PHASE)
CO	CLEAN OUT
CV	CHECK VALVE
DD	DRY DISCONNECT
FA	FLAME ARRESTOR
FC	FLEX CONNECTOR
FH	FLEXIBLE HOSE
FIA	FLOW INDICATOR ANALOG
FM	FLOW METER
FS	FLOW SWITCH
FT	FLOW TRANSMITTER
GV	GATE VALVE
HM	HOUR METER
LEL	LOWER EXPLOSIVE LIMIT
LGAC	LIQUID PHASE CARBON
LT	LEVEL TRANSMITTER
M	MOTOR
MCP	MASTER CONTROL PANEL
MD	MANUAL DRAIN
NS	NAPL STORAGE
NT	NAPL TANK
OIT	OPERATOR INTERFACE TERMINAL
OWS	OIL WATER SEPARATOR
PDB	POSITIVE DISPLACEMENT BLOWER
PI	PRESSURE INDICATOR
PLC	PROGRAMMABLE LOGIC CONTROLLER
PS	PRESSURE SWITCH
PT	PRESSURE TRANSMITTER
PRV	PRESSURE RELIEF VALVE
QCV	QUICK CONNECT VALVE
SI	SILENCER
SP	SAMPLE PORT
ST	SITE TUBE
TI	TEMPERATURE INDICATOR
TIA	TEMPERATURE INDICATOR ANALOG
TOX	THERMAL OXIDIZER
TP	TRANSFER PUMP
TSH	TEMPERATURE SWITCH HIGH
VI	VACUUM INDICATOR
VIA	VACUUM INDICATOR ANALOG
VRV	VACUUM RELIEF VALVE
PS/PT	PRESSURE SWITCH / PRESSURE TRANSMITTER
	BALL VALVE
	BUTTERFLY VALVE
	CHECK VALVE
	GATE VALVE
	RELIEF VALVE
	VACUUM BREAKER
	MALE CAMLOCK
	FEMALE CAMLOCK
	PLUGGED TEE (MANUAL DRAIN)
	FLAME ARRESTER
	ALARM LIGHT
	WARNING LIGHT
	EMERGENCY STOP
	RUN LIGHT
	AIR LINE
	INTRINSICALLY SAFE ANALOG LINE
	INTRINSICALLY SAFE LINE
	CONTROL LINE
	WATER LINE
	BREAK

ALARMS

17. TRANSFER PUMP (TP-702) MOTOR OVERLOAD
18. INTEGRAL PRODUCT TANK HIGH LEVEL WARNING
19. INTEGRAL PRODUCT TANK HIGH HIGH LEVEL
20. OIL WATER SEPARATOR (OWS-701) HIGH HIGH LEVEL
21. TRANSFER PUMP (TP-701) MOTOR OVERLOAD
22. BAG FILTER (BPF-701) HIGH PRESSURE
30. HIGH LEL
31. FIRE/SMOKE ALARM (FUTURE)
32. BUILDING INTERIOR HIGH TEMPERATURE
33. VOLTAGE FAULT
34. EMERGENCY STOP

REV.	DESCRIPTION	DATE	APPR.
4	AS BUILT REVISION; LEL-701 ANALOG I.S. WAS I.S.	12/19/11	JAD
3	ADDED TIA-001 WITH ALARM PER CUSTOMER REQUEST	10/24/11	JAD
2	UPDATED COMMON DISCHARGE PIPING FROM 6" TO 8"	9/30/11	JAD
1	UPDATED PER 9/6/11 SUBMITTAL COMMENTS	9/22/11	JAD

REVISIONS

CONFIDENTIALITY NOTE:
The information contained in this drawing is intended for use only by BISCO Environmental and Solutia Inc. The information is confidential and any copying, distribution or dissemination without the consent of BISCO Environmental is STRICTLY PROHIBITED.

DRWN BY JAD DATE 8/18/11
CHK BY DATE
APPR BY DATE

BISCO Environmental
Soil & Groundwater Remediation Equipment
Taunton, Massachusetts 02780

TITLE
VAPOR EXTRACTION & AIR INJECTION SYSTEM
PROCESS & INSTRUMENTATION DIAGRAM

SOLUTIA INC.
W.G.KRUMMRICH FACILITY – SAUGET, IL

JOB NO. 12936

SCALE	SIZE	DWG NO.	SHEET	REV
N/A	D	12936RAP	2 OF 3	4

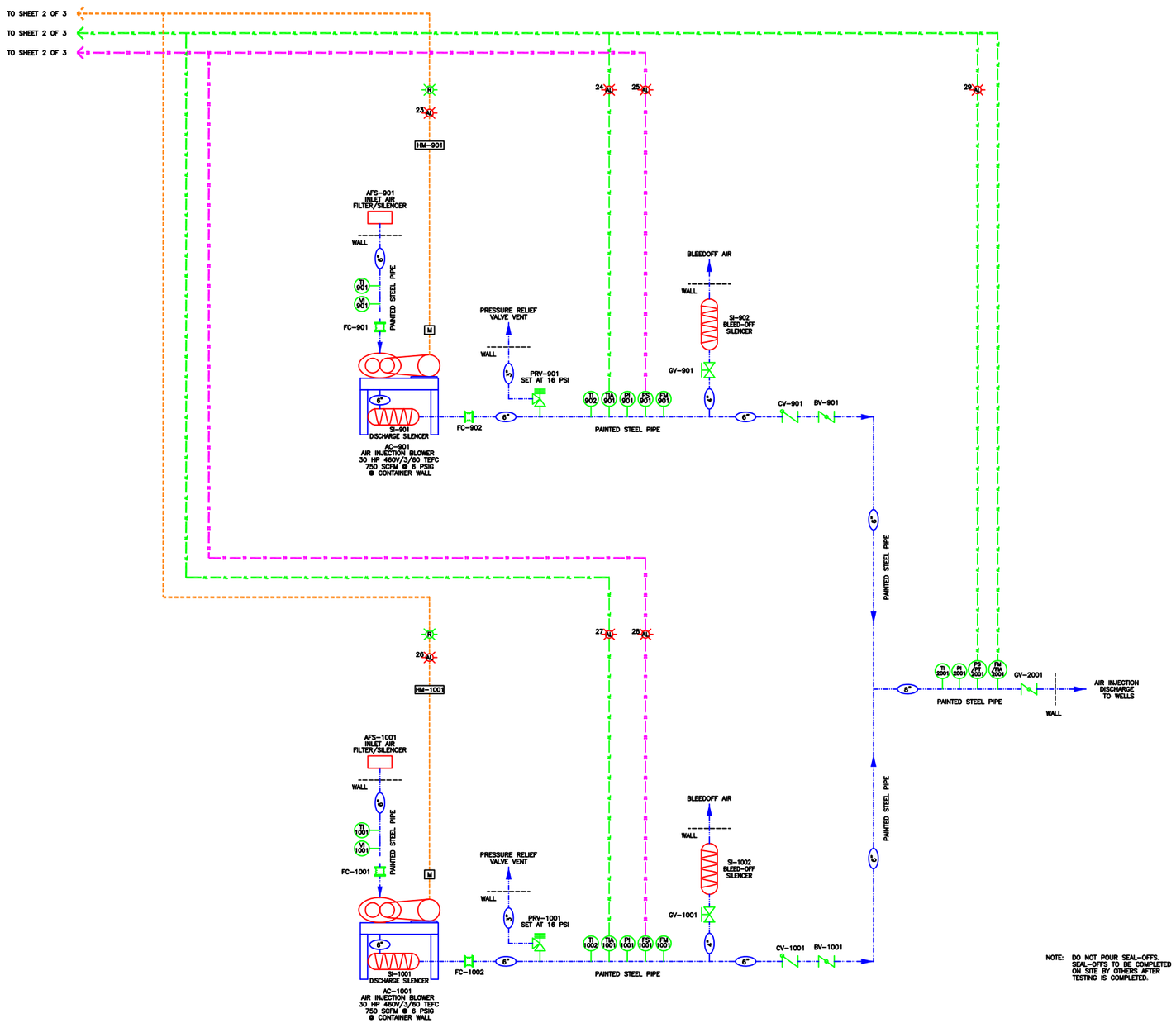

NOTE: DO NOT POUR SEAL-OFFS. SEAL-OFFS TO BE COMPLETED ON SITE BY OTHERS AFTER TESTING IS COMPLETED.

LEGEND

AC	AIR COMPRESSOR
AFS	AIR FILTER/SILENCER
AMS	AIR MOISTURE SEPARATOR
APF	AIR PARTICULATE FILTER
BFV	BUTTERFLY VALVE
BPF	BAG PARTICULATE FILTER
BV	BALL VALVE
CF	CARBON FILTER (VAPOR PHASE)
CO	CLEAN OUT
CV	CHECK VALVE
DD	DRY DISCONNECT
FA	FLAME ARRESTOR
FC	FLEX CONNECTOR
FH	FLEXIBLE HOSE
FIA	FLOW INDICATOR ANALOG
FM	FLOW METER
FS	FLOW SWITCH
FT	FLOW TRANSMITTER
GV	GATE VALVE
HM	HOUR METER
LEL	LOWER EXPLOSIVE LIMIT
LQAC	LIQUID PHASE CARBON
LT	LEVEL TRANSMITTER
M	MOTOR
MCP	MASTER CONTROL PANEL
MD	MANUAL DRAIN
NS	NAPL STORAGE
NT	NAPL TANK
OIT	OPERATOR INTERFACE TERMINAL
OWS	OIL WATER SEPARATOR
PDB	POSITIVE DISPLACEMENT BLOWER
PI	PRESSURE INDICATOR
PLC	PROGRAMMABLE LOGIC CONTROLLER
PS	PRESSURE SWITCH
PT	PRESSURE TRANSMITTER
PRV	PRESSURE RELIEF VALVE
QCV	QUICK CONNECT VALVE
SI	SILENCER
SP	SAMPLE PORT
ST	SITE TUBE
TI	TEMPERATURE INDICATOR
TIA	TEMPERATURE INDICATOR ANALOG
TOX	THERMAL OXIDIZER
TP	TRANSFER PUMP
TSH	TEMPERATURE SWITCH HIGH
VI	VACUUM INDICATOR
VIA	VACUUM INDICATOR ANALOG
VRV	VACUUM RELIEF VALVE
PS/PT	PRESSURE SWITCH / PRESSURE TRANSMITTER
	BALL VALVE
	BUTTERFLY VALVE
	CHECK VALVE
	GATE VALVE
	RELIEF VALVE
	VACUUM BREAKER
	MALE CAMLOCK
	FEMALE CAMLOCK
	PLUGGED TEE (MANUAL DRAIN)
	FLAME ARRESTER
	ALARM LIGHT
	WARNING LIGHT
	EMERGENCY STOP
	RUN LIGHT
	AIR LINE
	INTRINSICALLY SAFE ANALOG LINE
	INTRINSICALLY SAFE LINE
	CONTROL LINE
	WATER LINE
	BREAK

ALARMS

23. AIR INJECTION BLOWER (AC-901) MOTOR OVERLOAD
24. AIR INJECTION BLOWER (AC-901) HIGH TEMPERATURE
25. AIR INJECTION BLOWER (AC-901) LOW FLOW
26. AIR INJECTION BLOWER (AC-1001) MOTOR OVERLOAD
27. AIR INJECTION BLOWER (AC-1001) HIGH TEMPERATURE
28. AIR INJECTION BLOWER (AC-1001) LOW FLOW
29. COMBINED AIR INJECTION SYSTEM HIGH PRESSURE

REV.	DESCRIPTION	DATE	APPR.
4	AS BUILT REVISION; LEL-701 ANALOG I.S. WAS I.S.	12/19/11	JAD
3	ADDED TIA-001 WITH ALARM PER CUSTOMER REQUEST	10/24/11	JAD
2	UPDATED COMMON DISCHARGE PIPING FROM 6" TO 8"	9/30/11	JAD
1	UPDATED PER 9/6/11 SUBMITTAL COMMENTS	9/22/11	JAD

REVISIONS

CONFIDENTIALITY NOTE:
The information contained in this drawing is intended for use only by BISCO Environmental and Solutia Inc. The information is confidential and any copying, distribution or dissemination without the consent of BISCO Environmental is STRICTLY PROHIBITED.

DRWN BY JAD DATE 8/18/11
CHK BY DATE
APPR BY DATE

BISCO Environmental
Soil & Groundwater Remediation Equipment
Taunton, Massachusetts 02780

TITLE
VAPOR EXTRACTION & AIR INJECTION SYSTEM
PROCESS & INSTRUMENTATION DIAGRAM

SOLUTIA INC.
W.G.KRUMMRICH FACILITY – SAUGET, IL

JOB NO. 12936

SCALE	SIZE	DWG NO.	SHEET	REV
N/A	D	12936RAP	3 OF 3	4

REVISIONS			
REV.	DESCRIPTION	DATE	APPR.
1	UPDATED PER SHED CHANGE ORDER & PER 9/6/11 SUBMITTAL COMMENTS	9/22/11	JAD

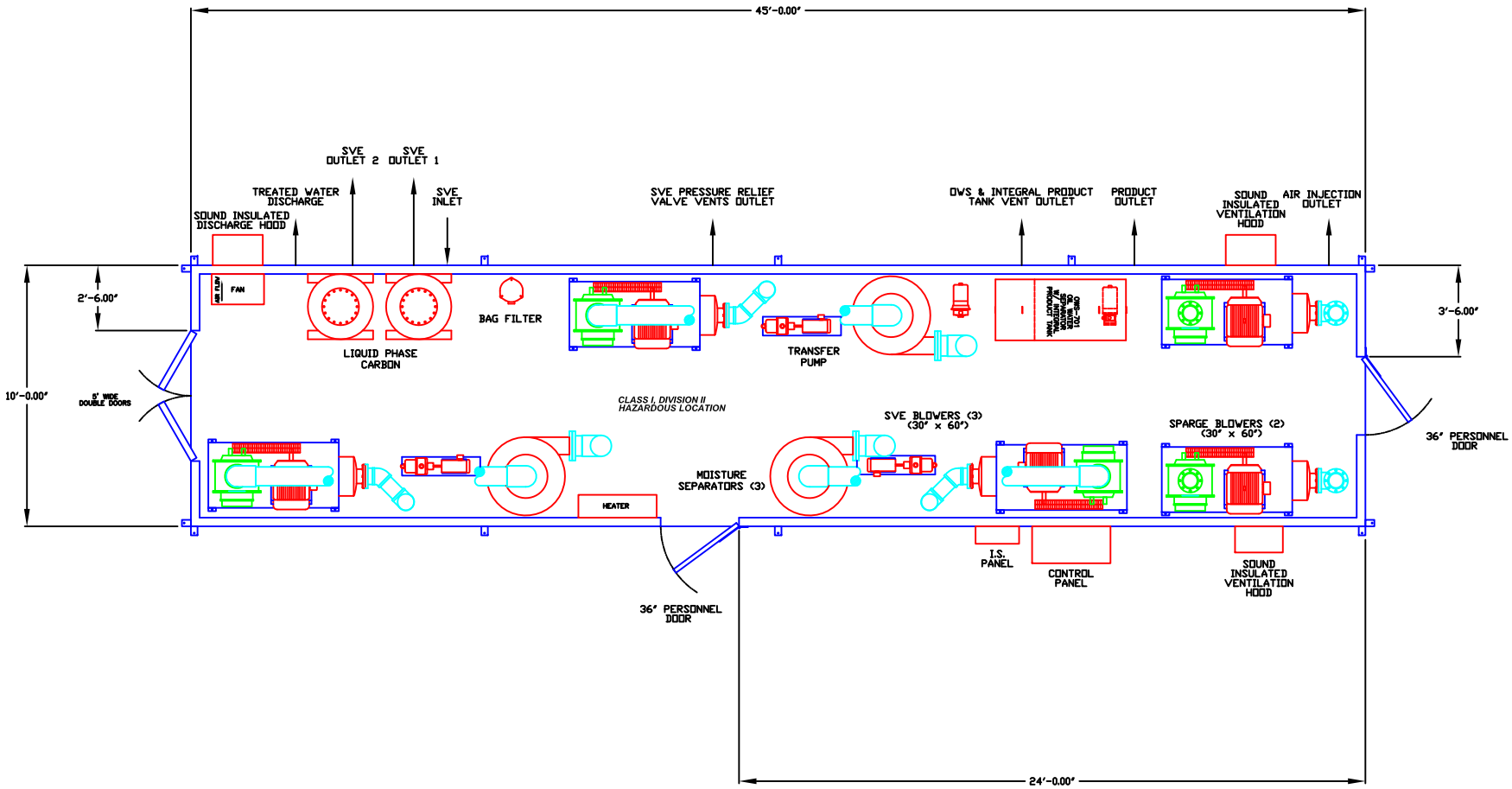

NOTES:

1. INTERIOR WALLS & CEILING COVERED WITH QUILTED SOUND BLANKETS.
2. ALL DOORS TO HAVE HOLD BACK LATCHES TO KEEP DOORS FROM SWINGING SHUT.
3. DO NOT POUR SEAL-OFFS. SEAL-OFFS TO BE COMPLETED ON SITE BY OTHERS AFTER TESTING IS COMPLETED.

CONFIDENTIALITY NOTE:
The information contained in this drawing is intended for use only by BISCO Environmental and Solutia Inc. The information is confidential and any copying, distribution or dissemination without the consent of BISCO Environmental is STRICTLY PROHIBITED.

BISCO Environmental
Soil & Groundwater Remediation Equipment
Taunton, Massachusetts 02780

DRWN BY JAD	DATE 6/24/11	TITLE SVE/AIR INJECTION SYSTEM SHED LAYOUT	
CHK BY	DATE	SOLUTIA INC. W.G. KRUMMRICH FACILITY – SAUGET, IL	JOB NO. 12936
APPR BY	DATE	SCALE 1"=40" / SIZE C / DWG NO. 12936RAL	SHEET 1 OF 1 / REV 1

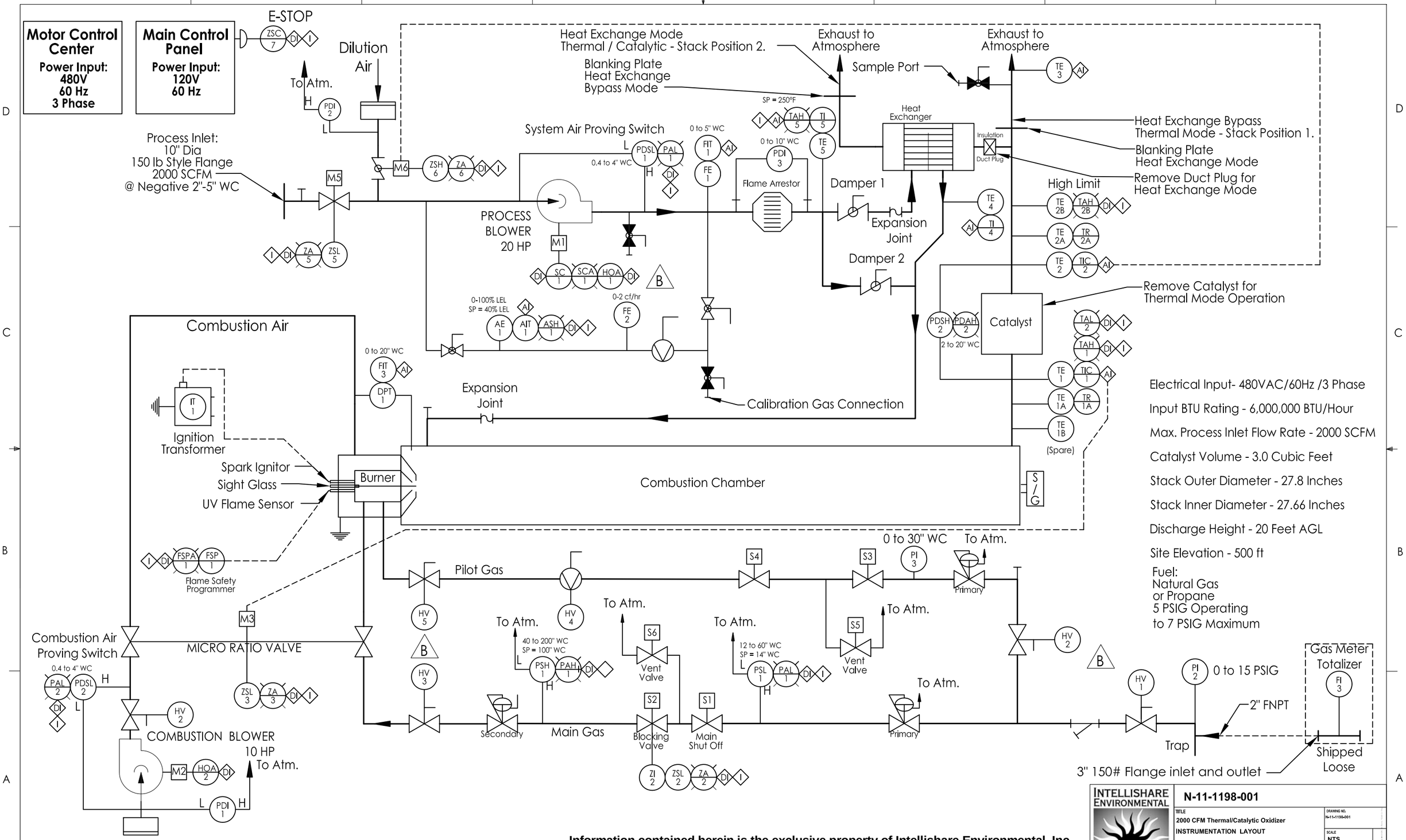

Note: Damper Valve Positions
Heat Exchange Mode - Damper 1 - Open, Damper 2 - Closed
Heat Exchange Bypass Mode - Damper 1 - Closed, Damper 2 - Open

Information contained herein is the exclusive property of Intellishare Environmental, Inc. and is provided for information purposes only. Disclosure, copying, distribution or sharing with others is strictly prohibited unless authorized in writing by Intellishare Environmental, Inc.

INTELLISHARE ENVIRONMENTAL
CLEAN AIR SOLUTIONS

N-11-1198-001

TITLE	2000 CFM Thermal/Catalytic Oxidizer INSTRUMENTATION LAYOUT
DRAWING NO.	N-11-1198-001
SCALE	NTS
DRAWN	SAL — DATE 5/16/2006
CHECKED	DATE
APPROVED	DATE
CUSTOMER	XDD Solutia
	W. G. Krummerich Facility, Sauget, IL
REV.	D
LAST DRAWN BY	Admin — DATE 7/28/2011
SOURCE	
PAGE	1 OF 3
LAST PLOTTED BY	XXX — DATE XXX

Measured Variable		Succeding Letters		Valve Bodies		Miscellaneous		Operators	
A	Analysis	A	Alarm		Valve (N.O. or Unspecified)		Centrifugal Blower	M	Electric Motor
F	Flow Rate	C	Controller		Valve Normally Closed			S	Solenoid
I	Current	D	Differential		Ball Valve		Flow Orifice		Manual
L	Level	E	Primary Element		Check Valve			S/G	Sight Glass
M	Motor	H	High		Butterfly Valve		Electrical Line		
P	Pressure	I	Indicator		Damper		Pneumatic Line		Vortex Damper
T	Temperature	L	Light		Orifice Valve		Process Ductwork		
Z	Position	L	Low				Panel Mounted Instrument		
		R	Record		Pressure Regulator (Self Contained)		Locally Mounted Instrument		Filter
		S	Switch				Mounted Inside Panel	AI	Analog Input
		T	Transmitter		Pressure Regulator (External Backload)		Alarm	DI	Digital Input
		V	Valve				Transition	I	Interlock
				T	Sample Port				

REV	BY	DATE	CHANGE
D	SAL	12-5-11	UPDATE AS BUILT
C	SAL	10-11-11	REMOVE FE 3 STACK FLOW ELEMENT. ADD DPT 1 TO TAKE DIFF PRESSURE ACROSS BURNER ORIFICE TO DETERMINE COMBUSITON AIR FLOW
B	SAL	8-31-11	UPDATE PER CUSTOMER COMMENTS.
A	SAL	8-30-11	UPDATE GAS METER POSITION

Revision Table

Information contained herein is the exclusive property of Intellishare Environmental, Inc. and is provided for information purposes only. Disclosure, copying, distribution or sharing with others is strictly prohibited unless authorized in writing by Intellishare Environmental, Inc.

INTELLISHARE ENVIRONMENTAL
CLEAN AIR SOLUTIONS

N-11-1198-001

TITLE: **2000 CFM Thermal/Catalytic Oxidizer INSTRUMENTATION LEGEND**

DRAWING NO. N-11-1198-001

SCALE: NTS

DRAWN: SAL DATE: 8/12/2011

CHECKED: DATE:

APPROVED: DATE:

CUSTOMER: XDD Solutia

W. G. Krummerich Facility, Sauget, IL

REV.: D

LAST DRAWN BY: Admin DATE: 7/28/2011

SOURCE:

PAGE 2 OF 3

FILE PATH:

LAST PLOTTED BY: XXX DATE: XXX

MODE	OXIDIZER READY CONTACT	OXIDIZER ALARM CONTACT	INLET VALVE M5	DILUTION VALVE M6	SYSTEM FAN M1	SYSTEM FAN SPEED CONTROL SC1	OXIDIZER COMBUSTION BLOWER M2	FIRING RATE VALVE M3	FUEL TRAIN BLOCKING VALVES S1,S2,S3,S4	FUEL TRAIN VENT VALVES S5,S6	OXIDIZER FLAME SAFETY FSP1
SYSTEM STOP	DISABLED	ENABLED	CLOSED	OPEN	DISABLED	DISABLED	DISABLED	CLOSED	CLOSED	OPEN	DISABLED
SYSTEM START PURGE	DISABLED	DISABLED	CLOSED	OPEN	ENABLED	PRE–SET VALUE 2000 SCFM	ENABLED	CLOSED	CLOSED	OPEN	DISABLED
SYSTEM PRE–HEAT	DISABLED	DISABLED	CLOSED	OPEN	ENABLED	PRE–SET VALUE 2000 SCFM	ENABLED	OPEN	OPEN	CLOSED	ENABLED
SYSTEM RUN	ENABLED	DISABLED	OPEN	ENABLED	ENABLED	PRE–SET VALUE 2000 SCFM	ENABLED	OPEN	OPEN	CLOSED	ENABLED
SYSTEM COOL–DOWN	DISABLED	DISABLED	CLOSED	OPEN	ENABLED 240 SEC.	PRE–SET VALUE 2000 SCFM	ENABLED 240 SEC.	CLOSED	CLOSED	OPEN	DISABLED
SYSTEM ALARM	DISABLED	ENABLED	CLOSED	OPEN	ENABLED 240 SEC.	PRE–SET VALUE 2000 SCFM	ENABLED 240 SEC.	CLOSED	CLOSED	OPEN	DISABLED
POWER FAULT	DISABLED	ENABLED	CLOSED	OPEN	DISABLED	DISABLED	DISABLED	CLOSED	CLOSED	OPEN	DISABLED

Information contained herein is the exclusive property of Intellishare Environmental, Inc. and is provided for information purposes only. Disclosure, copying, distribution or sharing with others is strictly prohibited unless authorized in writing by Intellishare Environmental, Inc.

INTELLISHARE ENVIRONMENTAL
CLEAN AIR SOLUTIONS

N-11-1198-001

TITLE
2000 CFM Thermal/Catalytic Oxidizer
MODE CHART

DRAWING NO. N-11-1198-001
SCALE NTS
REV. D

DRAWN SAL DATE 8/12/2011
CHECKED DATE
APPROVED DATE
LAST DRAWN BY Admin DATE 7/28/2011

CUSTOMER XDD Solutia
W. G. Krummerich Facility, Sauget, IL
SOURCE
PAGE 3 OF 3

LAST PLOTTED BY XXX DATE XXX

FILE PATH

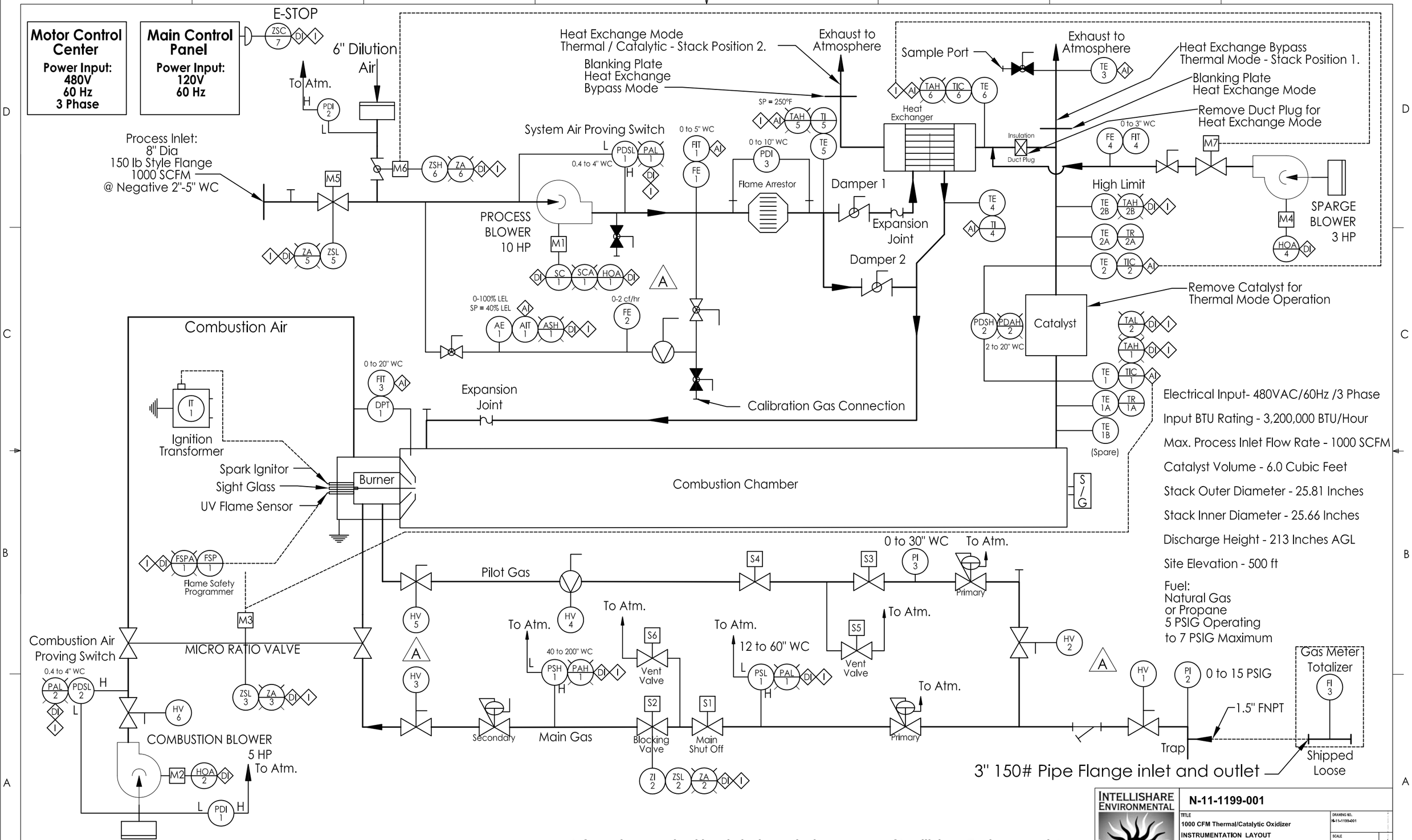

Note: Damper Valve Positions
Heat Exchange Mode - Damper 1 - Open, Damper 2 - Closed
Heat Exchange Bypass Mode - Damper 1 - Closed, Damper 2 - Open

Information contained herein is the exclusive property of Intellishare Environmental, Inc. and is provided for information purposes only. Disclosure, copying, distribution or sharing with others is strictly prohibited unless authorized in writing by Intellishare Environmental, Inc.

INTELLISHARE ENVIRONMENTAL
CLEAN AIR SOLUTIONS

N-11-1199-001

TITLE	1000 CFM Thermal/Catalytic Oxidizer INSTRUMENTATION LAYOUT
DRAWING NO.	N-11-1199-001
SCALE	NTS
DRAWN	SAL 8/16/2011
CHECKED	
APPROVED	
LAST DRAWN BY	Admin 7/28/2011
CUSTOMER	XDD Solutia
	W. G. Krummerich Facility, Sauget, IL
SOURCE	
REV.	C
PAGE	1 OF 3
LAST PLOTTED BY	XXX
DATE	XXX
FILE PATH	

Measured Variable		Succeding Letters		Valve Bodies		Miscellaneous		Operators	
A	Analysis	A	Alarm		Valve (N.O. or Unspecified)		Centrifugal Blower	M	Electric Motor
F	Flow Rate	C	Controller		Valve Normally Closed			S	Solenoid
I	Current	D	Differential		Ball Valve		Flow Orifice		Manual
L	Level	E	Primary Element		Check Valve			S / G	Sight Glass
M	Motor	H	High		Butterfly Valve		Electrical Line		
P	Pressure	I	Indicator		Damper		Pneumatic Line		Vortex Damper
T	Temperature	L	Light		Orifice Valve		Process Ductwork		
Z	Position	L	Low				Panel Mounted Instrument		
		R	Record		Pressure Regulator (Self Contained)		Locally Mounted Instrument		Filter
		S	Switch				Mounted Inside Panel	AI	Analog Input
		T	Transmitter		Pressure Regulator (External Backload)		Alarm	DI	Digital Input
		V	Valve				Transition	I	Interlock
				T	Sample Port				

HV 2

REV	BY	DATE	CHANGE
C	SAL	12-9-11	UPDATE AS BUILT
B	SAL	10-11-11	REMOVE FE 3 STACK FLOW ELEMENT. ADD DPT 1 TO TAKE DIFF PRESSURE ACROSS BURNER ORIFICE TO DETERMINE COMBUSITON AIR FLOW.
A	SAL	9-2-11	UPDATE GAS METER POSITION

Revision Table

Information contained herein is the exclusive property of Intellishare Environmental, Inc. and is provided for information purposes only. Disclosure, copying, distribution or sharing with others is strictly prohibited unless authorized in writing by Intellishare Environmental, Inc.

INTELLISHARE ENVIRONMENTAL
CLEAN AIR SOLUTIONS

N-11-1199-001

TITLE: **1000 CFM Thermal/Catalytic Oxidizer INSTRUMENTATION LEGEND**

DRAWING NO. N-11-1199-001

SCALE: NTS

DRAWN: SAL DATE: 8/16/2011

CHECKED: DATE:

APPROVED: DATE:

CUSTOMER: XDD Solutia

W. G. Krummerich Facility, Sauget, IL

REV.: C

LAST DRAWN BY: Admin DATE: 7/28/2011

SOURCE:

PAGE 2 OF 3

FILE PATH

LAST PLOTTED BY: XXX DATE: XXX

MODE	OXIDIZER READY CONTACT	OXIDIZER ALARM CONTACT	INLET VALVE M5	DILUTION VALVE M6	SYSTEM FAN M1	SYSTEM FAN SPEED CONTROL SC1	OXIDIZER COMBUSTION BLOWER M2	FIRING RATE VALVE M3	HEAT EX. SPARGE BLOWER M4	FUEL TRAIN BLOCKING VALVES S1,S2,S3,S4	FUEL TRAIN VENT VALVES S5,S6	OXIDIZER FLAME SAFETY FSP1
SYSTEM STOP	DISABLED	ENABLED	CLOSED	OPEN	DISABLED	DISABLED	DISABLED	CLOSED	DISABLED	CLOSED	OPEN	DISABLED
SYSTEM START PURGE	DISABLED	DISABLED	CLOSED	OPEN	ENABLED	PRE–SET VALUE 2000 SCFM	ENABLED	CLOSED	ENABLED	CLOSED	OPEN	DISABLED
SYSTEM PRE–HEAT	DISABLED	DISABLED	CLOSED	OPEN	ENABLED	PRE–SET VALUE 2000 SCFM	ENABLED	OPEN	ENABLED	OPEN	CLOSED	ENABLED
SYSTEM RUN	ENABLED	DISABLED	OPEN	ENABLED	ENABLED	PRE–SET VALUE 2000 SCFM	ENABLED	OPEN	ENABLED	OPEN	CLOSED	ENABLED
SYSTEM COOL–DOWN	DISABLED	DISABLED	CLOSED	OPEN	ENABLED 240 SEC.	PRE–SET VALUE 2000 SCFM	ENABLED 240 SEC.	CLOSED	ENABLED 240 SEC.	CLOSED	OPEN	DISABLED
SYSTEM ALARM	DISABLED	ENABLED	CLOSED	OPEN	ENABLED 240 SEC.	PRE–SET VALUE 2000 SCFM	ENABLED 240 SEC.	CLOSED	ENABLED 240 SEC.	CLOSED	OPEN	DISABLED
POWER FAULT	DISABLED	ENABLED	CLOSED	OPEN	DISABLED	DISABLED	DISABLED	CLOSED	DISABLED	CLOSED	OPEN	DISABLED

Information contained herein is the exclusive property of Intellishare Environmental, Inc. and is provided for information purposes only. Disclosure, copying, distribution or sharing with others is strictly prohibited unless authorized in writing by Intellishare Environmental, Inc.

INTELLISHARE ENVIRONMENTAL
CLEAN AIR SOLUTIONS

N-11-1199-001

TITLE
1000 CFM Thermal/Catalytic Oxidizer
MODE CHART

DRAWING NO. N-11-1199-001
SCALE NTS
REV. C

DRAWN SAL DATE 8/16/2011
CHECKED DATE
APPROVED DATE
LAST DRAWN BY Admin DATE 7/28/2011

CUSTOMER XDD Solutia
W. G. Krummerich Facility, Sauget, IL
SOURCE
PAGE 3 OF 3

LAST PLOTTED BY XXX DATE XXX

FILE PATH

APPENDIX C

Process Equipment Operation and Maintenance Manual

BISCO Environmental

NEEP Systems

Soil and Groundwater Remediation Equipment

Operation & Maintenance Manual

Vapor Extraction & Air Injection System

Project 12936

W.G. Krummrich Facility
Sauget, IL

Prepared for:

XDD, LLC
22 Marin Way, Unit 3
Stratham, NH 03885

135 ROBERT TREAT PAINE DRIVE
TAUNTON, MASSACHUSETTS 02780
TEL: (508) 738-5100 FAX: (508) 738-5022
www.biscoenv.com

BISCO Environmental

NEEP Systems

Soil and Groundwater Remediation Equipment

Table of Contents

Section 1 - Soil Vapor Extraction System

- Roots Model 711URAI Blower Specifications & Performance Curves
- Roots Model 711URAI Blower Modeling
- Roots Series URAI Blower Installation, Operation & Maintenance Instructions
- Marathon Model E984B Motor Specifications
- Marathon Motor Installation, Operation & Maintenance Manual
- Belts & Sheaves Information
- Stoddard Model D33H-6 Silencer Specifications
- Stoddard Model F65V-8 Inlet Filter Specifications
- Solberg Model FS-275P-600F Dilution Filter Specifications
- Solberg Filter Silencers & Inlet Filters Maintenance Manual
- Kunkle Model 215V-K01AQE0006 Vacuum Relief Valve Specifications
- Kunkle Model 0337-K10ANE0001 Pressure Relief Valve Specifications
- Kunkle Relief Valve Installation & Operating Instructions
- DelVal Model 52-080-111-E-1-L-0 8" Butterfly Valve Specifications
- DelVal Model 52-080-111-E-1-L-0 6" Butterfly Valve Specifications
- DelVal Model 52-080-111-E-1-L-0 12" Butterfly Valve Specifications
- DelVal Series 50/52 Butterfly Valve Installation, Operation & Maintenance Manual
- US Valve Model 09-1-0 6" SVE Discharge Check Valve Specifications
- US Valve Model 09-1-0 8" Moisture Separator Inlet Check Valve Specifications
- US Valve Check Valve Installation & Maintenance Instructions
- Moyno Model 35601 Transfer Pump Specifications
- Moyno 331-367 O&M Manual
- 240 Gallon Moisture Separator Tank Dimensional Drawing
- ACS Model 5CA Demister Modeling
- ACS Demister Design Manual

Section 2 - Air Injection System

- Roots Model 59 URAI Blower Specifications & Performance Curves
- Roots Model 59 URAI Blower Modeling
- Roots Series URAI Blower Installation, Operation & Maintenance Instructions
- Marathon Model E983B Motor Specifications
- Marathon Motor Installation, Operation & Maintenance Manual
- Belts & Sheaves Information
- Stoddard Model D33H-5, Discharge Silencer Specifications
- Solberg Model FS-275P-600F Inlet Filter Specifications
- Solberg Filter Silencers & Inlet Filters Maintenance Manual
- Kunkle Model 0337-K10ANE0008 Pressure Relief Valve Specifications
- Kunkle Relief Valve Installation & Operating Instructions
- US Valve Model 09-1-0, 6" Discharge Check Valve Specifications
- US Valve Check Valve Installation & Maintenance Instructions

- DelVal Model 52-060-111-E-1-L-0 6" Butterfly Valve Specifications
- DelVal Model 52-080-111-E-1-L-0 8" Butterfly Valve Specifications
- DelVal Series 50/52 Butterfly Valve Installation, Operation & Maintenance Manual
- Stoddard Model L21-4 Bleed Silencer Specifications

Section 3 - Oil/Water Separator System

- Hydro Quip Model AGM-2SS-73V-1H-IP Oil Water Separator Operation & Maintenance Manual
- Goulds Model 1ST1G5A4 Transfer Pump Specifications
- Goulds Series NPE Transfer Pump Installation, Operation & Maintenance Instructions
- Gorman-Rupp Model GMC 1DC3 Product Pump Specifications
- Gorman-Rupp Product Pump Installation, Operation & Maintenance Manual
- McMaster-Carr 55 Gallon Product Tank Specifications
- Grainger Model 6YG06 65 Gallon Overpak Drum Specifications
- McMaster-Carr Model 1206K81 Carbon & Vent Flame Arrester Specifications

Section 4 - Filter Systems

- Krystil Klear Model 88 Bag Filter Vessel Specifications
- Krystil Klear Model 88 Bag Filter Installation & Maintenance Instructions
- Krystil Klear Bag Specifications
- Tetrasolv Model AF-500 Liquid Phase Carbon Filter Specifications
- Tetrasolv Series AF Liquid Phase Carbon Filter Operation & Maintenance Manual
- Tetrasolv Model VR-400 Vapor Phase Carbon Filter Specifications
- Tetrasolv Model VFD-30 Vapor Phase Carbon Filter Specifications
- Tetrasolv Series VR Vapor Phase Carbon Filter Operation & Maintenance Manual

Section 5 - Instrumentation

Sub Section 5A – Pressure/Vacuum Device

- Dwyer Model 626-08-CH-P1-E1-S1 Air Sparge & Oil/Water Separator Transfer Pump, Pressure Transmitter Specifications
- Dwyer Model 626-07-CH-P1-E1-S1-LED Vapor Discharge Manifold Pressure Transmitter Specifications
- Dwyer Series 626 Pressure Transmitter Installation & Operating Instructions
- Ashcroft Model K1-7M02-42-F2 SVE Vacuum Transmitter Specifications
- Ashcroft Model K1 Pressure Transducer Instruction Sheet

Sub Section 5B – Temperature Devices

- Dwyer Model RRT225OU Enclosure Interior High Temperature Switch Specifications - Installation & Operating Instructions
- Pyromation Model R1T185L 48 3-012-8HN 71 T, SVE Manifold Temperature Transmitter Specifications
- Pyromation Model R1T185L 48 3-006-00-8HN 71, Air Sparge Temperature Transmitter Specifications
- Pyromation Series 440 Temperature Transmitter Installation & Operating Instructions

Sub Section 5C – Flow Devices

- Dwyer Model 2003-MP Air Sparge Flow Meter Specifications (FM-901 & FM-1001)
- Dwyer Model 2003 SVE Manifold Flow Meter Specifications (FM-001)
- Dwyer Model 2005 SVE Flow Meter Specifications (FM-102, FM-202 & FM-302)
- Dwyer Model 2002 SVE Flow Meter Specifications (FM-101, FM-201 & FM-301)
- Dwyer Magnehelic Series 2000 Differential Pressure Gauge Operating Instructions
- Dwyer Model DS-300-6 Air Sparge & SVE Flow Element Specifications (FM-910 & FM-1001; FM-102, FM-202 & FM-302)
- Dwyer Model DS-300-8 Air Sparge, SVE & Vapor Discharge Manifold Flow Element Specifications (FM-101, FM-201 & FM-301; FM-401; FM-2001)
- Dwyer Series DS-300 Flow Element Installation & Operating Instructions
- Dwyer Model MS-111-LCD Air Sparge Air Flow Transmitter Specifications (FM-2001)
- Dwyer Model MS-131-LCD Soil Vapor Extraction System Discharge Manifold Air Flow Transmitter Specifications (FM-401)
- Dwyer Series MS Air Flow Transmitter Installation & Operating Instructions
- Dwyer Model V4-2-U SVE & Air Sparge Flow Switch Specifications (FS-101, FS-201 & FS-301; FS-901 & FS-1001)
- Dwyer Series V4 Flow Switch Installation & Operating Instructions
- Dwyer Model DS-400-12 SVE Manifold Flow Element Specifications (FM-001)
- Dwyer Series DS-400 Flow Element Installation & Operating Instructions
- Istec Model 1810 Bag Filter Effluent, Water Flow Totalizer Specifications
- Istec Series 1800 Flow Totalizer Installation Instructions
- Delta P (IWC) vs. Flow Rate (SCFM) Graph - DS-400 - FM-001
- Delta P (IWC) vs. Flow Rate (SCFM) Graph - DS-300 - FM-101, FM-201 & FM-301
- Delta P (IWC) vs. Flow Rate (SCFM) Graph - DS-300 - FM-102, FM-202 & FM-302
- Delta P (IWC) vs. Flow Rate (SCFM) Graph - DS-300 - FM-901 & FM-1001
- Delta P (IWC) vs. Flow Rate (SCFM) Graph - DS-300 - FIA-401
- Delta P (IWC) vs. Flow Rate (SCFM) Graph - DS-300 - FIA-2001

Sub Section 5D – Level Devices

- Vegaflex Model FX61 Moisture Separator, Oil Water Separator & Product Tank Level Transmitter Product Information
- Vegaflex Model FX61 Level Transmitter Operating Instructions

Section 6 - Control Panel

- Control Panel Schematics
- Pfannenberg Filter Fan Installation & Operating Instructions
- Pfannenberg Model FLZ 530 Thermostat Installation & Operating Instructions
- Cutler-Hammer Series KD Circuit Breaker Installation Instructions
- Ferraz Shawmut Surge Trap Installation & Maintenance Instructions
- SymCom Motor Saver Model 460 Installation Instructions
- Sola HD Series SDU Uninterruptible Power Systems Instruction Manual
- ABB 24VDC Power Supply Operating & Installation Instructions
- Allen-Bradley Overload Relay Application & Installation Bulletin
- Johnson Controls A19 Series Thermostat Installation & Adjustment Instructions
- Allen-Bradley Model 855 PS B10LE422, Strobe Light Indicator Specifications

- C-More Model EA Operator Interface Terminal Hardware User Manual
- Allen-Bradley (Rockwell) Compact GuardLogix Controller User Manual
- Sierra Wireless Raven X Wireless Modem Quick Start Guide
- Sierra Wireless Raven X Wireless Modem User Guide

Section 7 - Enclosure HVAC & Accessories

- Killark Class 1, Division 2 Hazardous Location Light Specifications
- Marley G Series Class 1, Division 2 Heater Installation & Operation Instructions
- Dayton Class 1, Division 2, 20" Ventilation Fan Installation & Maintenance Instructions
- Grainger Model 6JEN2 Emergency Light Specifications
- Safe T Net 100 LEL Monitor External Display Operator's Manual
- Combustible Gas Diffusion Transmitter (65-5001) Operator's Manual
- Net Safety Millennium Smoke Detector Specifications
- Net Safety Air Particle Monitor (Infrared Smoke Detector) User Manual
- Grainger Model 5KDG0 Exterior Audio/Visual Indicator Specifications
- Grainger Model 5KDG1 Exterior/Visual Indicator Back Box Specifications
- Grainger Model 1N900 Interior Visual Indicator Specifications
- Grainger Model 3WU54 Interior Audio Indicator Specifications

Section 8 - System Drawings

- Vapor Extraction & Air Injection System Process & Instrumentation Diagram (3 Sheets)
- SVE / Air Injection System Shed Layout

Section 9 – Warranty

- Limitation of Warranty & Limitation of Remedy

Section 1 - Soil Vapor Extraction System

- Roots Model 711URAI Blower Specifications & Performance Curves
- Roots Model 711URAI Blower Modeling
- Roots Series URAI Blower Installation, Operation & Maintenance Instructions
- Marathon Model E984B Motor Specifications
- Marathon Motor Installation, Operation & Maintenance Manual
- Belts & Sheaves Information
- Stoddard Model D33H-6 Silencer Specifications
- Stoddard Model F65V-8 Inlet Filter Specifications
- Solberg Model FS-275P-600F Dilution Filter Specifications
- Solberg Filter Silencers & Inlet Filters Maintenance Manual
- Kunkle Model 215V-K01AQE0006 Vacuum Relief Valve Specifications
- Kunkle Model 0337-K10ANE0001 Pressure Relief Valve Specifications
- Kunkle Relief Valve Installation & Operating Instructions
- DelVal Model 52-080-111-E-1-L-0 8" Butterfly Valve Specifications
- DelVal Model 52-080-111-E-1-L-0 6" Butterfly Valve Specifications
- DelVal Model 52-080-111-E-1-L-0 12" Butterfly Valve Specifications
- DelVal Series 50/52 Butterfly Valve Installation, Operation & Maintenance Manual
- US Valve Model 09-1-0 6" SVE Discharge Check Valve Specifications
- US Valve Model 09-1-0 8" Moisture Separator Inlet Check Valve Specifications
- US Valve Check Valve Installation & Maintenance Instructions
- Moyno Model 35601 Transfer Pump Specifications
- Moyno 331-367 O&M Manual
- 240 Gallon Moisture Separator Tank Dimensional Drawing
- ACS Model 5CA Demister Modeling
- ACS Demister Design Manual

ROOTS™ UNIVERSAL RAI®
ROTARY POSITIVE BLOWERS
Frames 22 thru 718

BASIC BLOWER DESCRIPTION

Universal RAI® blowers are heavy-duty rotary blowers designed with detachable rugged steel mounting feet that permit easy, in-field adaptability to vertical or horizontal installation requirements.

Because of the detachable mounting feet, these units can be easily adapted to any of four drive shaft positions: right, left, bottom, or top. The compact, sturdy design is engineered for continuous service when operated in accordance with speed and pressure ratings.

The basic model consists of a cast iron casing, carburized and ground alloy steel spur timing gears secured to steel shafts with a taper mounting and locknut, and cast iron involute impellers. Oversized antifriction bearings are used, with a cylindrical roller bearing at the drive shaft to withstand V-belt pull. The Universal RAI® features splash oil lube on the gear end and grease lube on the drive end. ROOTS' exclusive "figure-eight" gearbox design improves oil distribution to maximize gear and bearing life. After testing, the unit is sprayed with a protective paint, and boxed or skid mounted for delivery.

Available accessories include driver, relief valve, inlet and discharge silencers, inlet filter, check valve, extended base, V-belt or flexible coupling and drive guards.

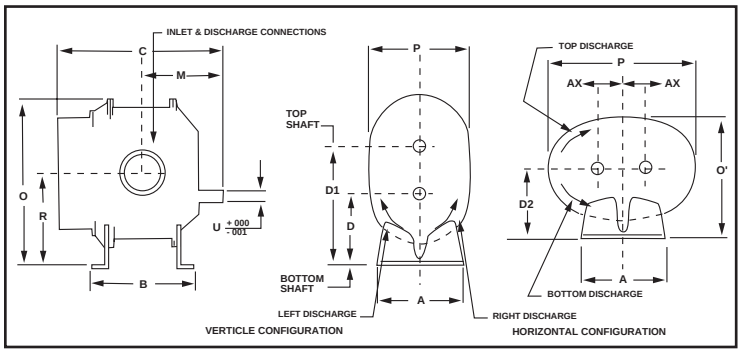

Frame	A	A'	B	C	D	D1	D2	M	O	O'	P	P'	R	U	INLET DISCH.	AX	WGT
22U	5.13	5.13	5.00	9.75	3.75	6.25	3.75	5.13	9.63	6.88	6.25	9.25	5.00	.625	1.0 NPT	1.25	32
24U	5.13	5.13	7.00	11.75	3.75	6.25	3.75	6.13	9.63	6.88	6.25	9.25	5.00	.625	2.0 NPT	1.25	43
32U	7.25	7.25	6.75	11.25	5.00	8.50	5.00	5.81	12.81	8.88	7.75	12.13	6.75	.750	1.25 NPT	1.75	69
33U	7.25	7.25	7.63	12.13	5.00	8.50	5.00	6.25	12.81	8.88	7.75	12.13	6.75	.750	2.0 NPT	1.75	74
36U	7.25	7.25	10.00	14.63	5.00	8.50	5.00	7.56	12.81	8.88	7.75	12.13	6.75	.750	2.5 NPT	1.75	102
42U	8.00	8.00	7.25	13.00	6.25	10.25	6.25	6.86	15.06	10.63	8.75	13.63	8.25	.875	1.5 NPT	2.00	88
45U	8.00	8.00	10.00	15.50	6.25	10.25	6.25	8.00	15.06	10.63	8.75	13.63	8.25	.875	2.5 NPT	2.00	109
47U	8.00	8.00	11.75	17.63	6.25	10.25	6.25	9.25	15.06	10.50	8.50	13.63	8.25	.875	3.0 NPT	2.00	128
53U	10.50	10.50	8.38	15.38	6.25	11.25	6.75	8.18	17.38	11.88	10.25	17.25	8.75	1.125	2.5 NPT	2.50	143
56U	10.50	10.50	11.00	18.00	6.25	11.25	6.75	9.19	17.38	12.25	11.00	17.25	8.75	1.125	4.0 NPT	2.50	170
59U	10.50	10.50	14.00	21.18	6.25	11.25	6.75	11.19	17.38	12.25	11.00	17.25	8.75	1.125	4.0 NPT	2.50	204
65U	11.00	11.00	10.00	18.38	8.75	14.75	8.75	9.19	21.63	15.13	12.75	19.75	11.75	1.375	3.0 NPT	3.00	245
68U	11.00	11.00	13.00	21.38	8.75	14.75	8.75	10.82	21.63	15.13	12.75	19.75	11.75	1.375	5.0 NPT	3.00	285
615U	11.00	11.00	20.00	28.38	8.75	14.75	8.75	14.32	21.63	16.25	15.00	19.75	11.75	1.375	6.0 FLG	3.00	425
76U	14.00	21.00	11.75	19.94	11.00	18.00	11.00	10.00	26.13	20.69	19.38	23.25	14.50	1.562	4.0 NPT	3.50	400
711U	14.00	21.00	16.75	25.19	11.00	18.00	11.00	12.75	26.13	19.50	17.00	23.25	14.50	1.562	6.0 FLG	3.50	530
718U	14.00	21.00	23.75	32.19	11.00	18.00	11.00	16.25	26.13	19.50	17.00	23.25	14.50	1.562	8.0 FLG	3.50	650

OPERATING PRINCIPLE

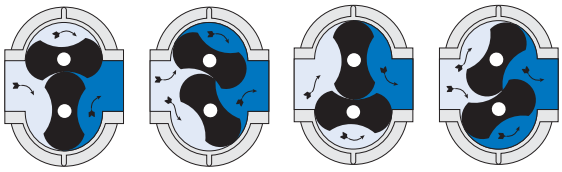

Two figure-eight lobe impellers mounted on parallel shafts rotate in opposite directions. As each impeller passes the blower inlet, it traps a definite volume of air and carries it around the case to the blower outlet, where the air is discharged. With constant speed operation, the displaced volume is essentially the same regardless of pressure or temperature.

Timing gears control the impellers relative positions and maintain small but definite clearances. This allows operation without lubrication requirements inside the unit casing.

DRESSER® Roots

Frame Size	Speed	4 PSI		5 PSI		6 PSI		7 PSI		8 PSI		9 PSI		10 PSI		12 PSI		13 PSI		14 PSI		15 PSI		VACUUM DATA		
		CFM	BHP	CFM	BHP	CFM	BHP	CFM	BHP	CFM	BHP	CFM	BHP	CFM	BHP	CFM	BHP	CFM	BHP	CFM	BHP	CFM	BHP	INHGV	CFM	BHP
22	2950	31	0.9	29	1.1	27	1.3	26	1.5	24	1.7	23	1.9	21	2.1									13	20	1.3
	3550	40	1.0	39	1.3	37	1.5	35	1.8	34	2.0	32	2.3	31	2.5	28	3.0							14	28	1.7
	5275	68	1.6	66	2.0	64	2.4	63	2.7	61	3.1	60	3.5	59	3.8	56	4.6							15	53	2.8
24	2950	68	1.7	65	2.1	63	2.5	60	2.9															14	48	2.8
	3550	88	2.0	85	2.5	82	3.0	79	3.5															14	67	3.4
	5275	143	3.1	140	3.9	137	4.6	134	5.4															15	119	5.5
32	1750	54	1.4	51	1.7	48	2.1	45	2.4	43	2.8	41	3.1	39	3.5	35	4.1							13	37	2.2
	2950	108	2.4	105	3.0	102	3.6	99	4.2	97	4.7	95	5.3	93	5.9	89	7.1	87	7.6	86	8.2	84	8.8	15	84	4.3
	3550	135	3.0	132	3.7	129	4.4	126	5.1	124	5.8	122	6.5	120	7.2	116	8.6	114	9.3	113	10.0	111	10.6	16	108	5.6
33	1750	75	1.9	71	2.4	67	2.9	64	3.3	61	3.8	58	4.3	56	4.7	51	5.7							13	53	3.0
	2950	149	3.3	145	4.1	141	4.9	138	5.7	135	6.5	132	7.3	130	8.1	125	9.7							15	119	5.9
	3550	186	4.1	182	5.0	178	6.0	175	6.9	172	7.9	169	8.8	167	9.8	162	11.7							15	156	7.2
36	1750	132	3.2	126	3.9	121	4.7	117	5.5															14	95	5.4
	2950	254	5.5	249	6.8	244	8.1	239	9.4															15	212	9.8
	3550	316	6.7	310	8.3	305	9.9	300	11.5															15	273	11.9
42	1750	78	1.9	74	2.4	71	2.8	69	3.3	66	3.7	64	4.2	61	4.7	57	5.6	55	6.0					14	55	3.2
	2950	150	3.3	147	4.1	144	4.9	141	5.7	139	6.5	136	7.2	134	8.0	130	9.6	128	10.3	126	11.1	124	11.9	16	121	6.2
	3550	187	4.1	183	5.1	180	6.0	177	7.0	175	7.9	172	8.8	170	9.8	166	11.6	164	12.6	162	13.5	160	14.4	16	157	7.6
45	1750	161	3.8	155	4.7	150	5.6	145	6.6	140	7.5	136	8.4	132	9.3									14	121	6.4
	2950	306	6.7	300	8.2	295	9.8	290	11.3	285	12.9	281	14.4	277	16.0									16	253	12.5
	3550	379	8.2	373	10.1	368	12.0	363	13.9	358	15.7	354	17.6	349	19.5									16	326	15.2
47	1750	215	5.0	208	6.2	201	7.4	195	8.6															14	165	8.4
	2950	407	8.8	399	10.8	392	12.9	386	14.9															15	348	15.4
	3550	502	10.9	495	13.3	488	15.8	482	18.3															15	444	18.8
53	1170	113	2.7	108	3.4	103	4.1	99	4.8	96	5.4	92	6.1	89	6.8	82	8.1							13	85	4.3
	1750	189	4.2	184	5.2	180	6.2	176	7.2	172	8.2	168	9.2	165	10.3	159	12.3	156	13.3	153	14.3			15	151	7.5
	2850	334	7.4	329	9.0	325	10.7	321	12.3	317	14.0	313	15.6	310	17.2	304	20.5	301	22.1	298	23.8	295	25.4	16	291	13.4
56	1170	196	4.6	188	5.7	182	6.9	175	8.0	170	9.1	164	10.2	159	11.4	150	13.6							14	146	7.8
	1750	324	7.0	316	8.7	310	10.4	304	12.1	298	13.8	292	15.5	287	17.2	278	20.5	273	22.2					15	266	12.6
	2850	567	12.2	560	15.0	553	17.7	547	20.5	541	23.2	536	26.0	530	28.7	521	34.2	517	37.0					16	501	22.4
59	1170	299	6.7	290	8.4	281	10.0	273	11.7															14	237	11.4
	1750	486	10.3	477	12.8	469	15.2	461	17.7															15	414	18.4
	2850	842	18.0	832	22.0	824	26.0	816	30.0															15	770	30.8
65	1170	223	5.2	215	6.4	208	7.7	202	8.9	196	10.2	190	11.5	185	12.7	175	15.2	171	16.5	166	17.7			14	171	8.7
	1750	365	8.0	358	9.9	351	11.8	344	13.7	339	15.6	333	17.4	328	19.3	318	23.1	313	24.9	309	26.8	305	28.7	16	297	15.1
	2350	513	11.4	505	13.9	489	16.4	492	19.0	486	21.5	481	24.0	475	26.5	465	31.6	461	34.1	456	36.6	452	39.1	16	445	20.6
68	1170	358	8.3	345	10.3	334	12.3	324	14.3	314	16.3	305	18.3	297	20.3	281	24.4	274	26.4	267	28.4			14	275	13.9
	1750	587	12.7	574	15.7	563	18.7	553	21.8	544	24.8	535	27.8	526	30.8	510	36.8	503	39.8	496	42.9			16	478	24.0
	2350	824	17.8	811	21.8	800	25.9	790	29.9	781	34.0	772	38.0	763	42.1	747	50.2	740	54.2	733	58.3			16	715	32.8
615	1170	670	15.4	647	19.1	626	22.9	607	26.7															11	581	20.5
	1750	1099	23.4	1076	29.1	1055	34.7	1036	40.4															12	989	33.7
	2350	1543	32.4	1520	40.0	1499	47.6	1480	55.2															12	1433	46.0
76	1170	393	8.6	383	10.6	374	12.7	367	14.8	359	16.8	352	18.9	346	21.0	333	25.1	328	27.2	322	29.2	317	31.3	15	319	15.4
	1750	628	13.4	618	16.5	609	19.6	601	22.7	594	25.8	587	28.9	580	32.0	568	38.1	562	41.2	557	44.3	552	47.4	16	543	24.9
	2050	743	16.2	740	19.8	731	23.4	723	27.0	716	30.6	709	34.3	702	37.9	690	45.1	684	48.7	678	52.4	673	56.0	16	664	29.5
711	1170	738	15.5	723	19.2	710	23.0	697	26.8	686	30.5	675	34.3	665	38.1									15	623	27.9
	1750	1166	23.9	1151	29.5	1138	35.2	1125	40.8	1114	46.4	1103	52.0	1093	57.7									16	1035	45.0
	2050	1387	28.6	1372	35.2	1359	41.8	1347	48.4	1335	55.0	1324	61.6	1314	68.2									16	1256	53.1
718	1170	1221	25.8	1202	34.4	1183	37.2																	12	1122	38.8
	1750	1920	38.2	1898	47.4	1879	56.5																	12	1818	54.8
	2050	2280	45.5	2258	56.2	2239	66.9																	12	2178	64.7

NOTES: 1. Performance based on inlet air at standard pressure of 14.7 psia, standard temperature of 68º F, and specific gravity of 1.0.
2. Vacuum ratings based on inlet air at standard temperature of 68º F, discharge pressure of 30" Hg and specific gravity of 1.0.

Design and Construction Features

1. Detachable steel mounting feet
2. Rigid one-piece cast iron casing
3. Anti-friction bearings
4. Splash oil lubricated spur timing gears
5. Connections in standard pipe sizes
6. Ground steel shafts
7. Straight, precision machined two-lobe impellers

DRESSER Roots

S-12K84
September 2003

Copyright 2003 Dresser, Inc. All rights reserved.
Dresser Design and Universal RAI® are registered trademarks of Dresser, Inc.
ROOTS™ is a trademark of Dresser, Inc.
All information subject to change without notice.

Dresser ROOTS
2135 Hwy 6 South
Houston, TX 77077
Ph: 281-966-4700
Fx: 281-966-4309
Toll Free (US): 877-363-ROOT(S)

Dresser ROOTS
Connersville
900 West Mount Street
Connersville, IN 47331
Ph: 765-827-9200
Fx: 765-827-9266

Dresser ROOTS
Holmes Operation
PO Box B7
Off St. Andrews Rd
Turnbridge, Huddersfield
England HD1 6RB
Ph: +44-1484-422222
Fx: +44-1484-422668

website: www.rootsblower.com ◆ email: ROOTS@dresser.com

711 URAI: Variable Speed Performance

Dresser ROOTS

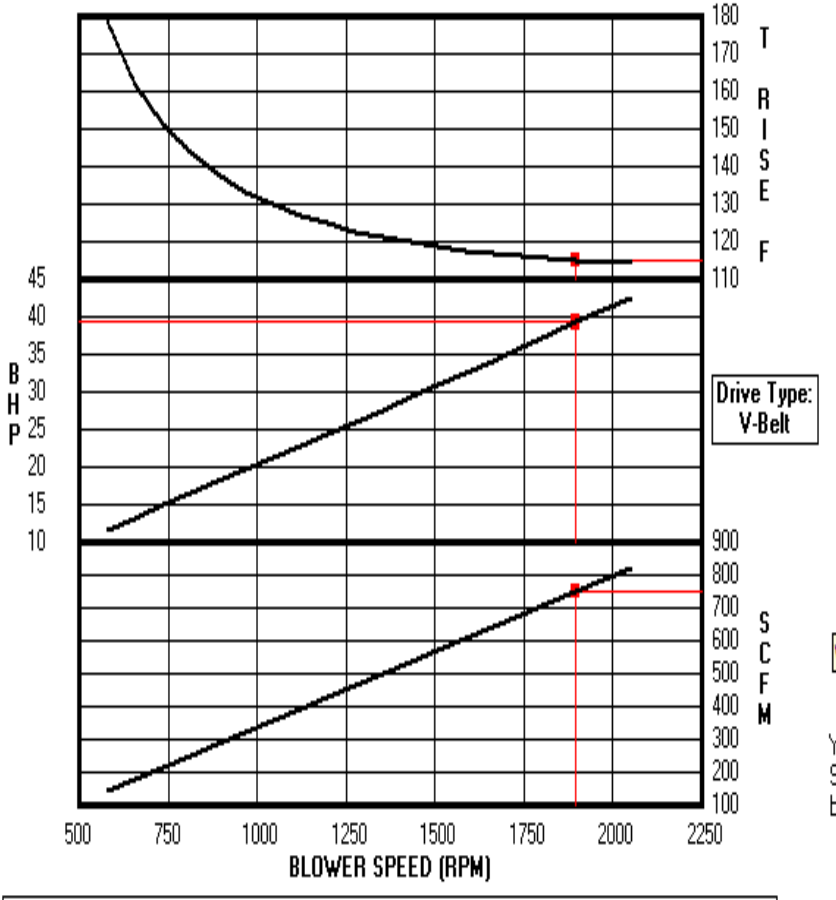

Drive Type:
V-Belt

Enter a new Speed

Recalc

Close Form

Will not print if this button is used.

Print Curve

You must press the Print Screen keyboard button before the Print Curve Button.

```
INLET CONDITIONS: AIR
                  RH = 100.00%, MW = 28.712, k = 1.394, Tin = 55 deg F
          DESIGN: Speed = 1895 RPM
                  System Inlet P = 10 in Hg Vac, Inlet P Loss = 22.0 in
H2O
                  System Disch P = 14.7 PSIA, Disch P Loss = 15.0 in H2O
STD:        RH = 36%, T = 68 deg F, P = 14.7 PSIA
```

Design Data

CUSTOMER: Solutia
PROJECT: W.G. Krummrich - SVE (40 HP)

Company: ROOTS Division
Address: 16240 Port Northwest Drive, Houston, Texas 77041
Ph: 832-590-2305/1-877-393-7668 Fax: 832-590-2326

Customer: Solutia
Project: W.G. Krummrich - SVE (40 HP)

ROOTS BLOWER PERFORMANCE SUMMARY : Program Version 6.000 Release Date 2/28/2008
Program Mode: SELECTION Run Date: 09/27/2011

AMBIENT CONDITIONS:

Gas	AIR	
Relative Humidity	100%	
Molecular Weight	28.712	
k-Value	1.394	
Specific Gravity	.991	
Ambient Temperature	95	deg F
Ambient Pressure	14.7	PSIA
Elevation	0	feet

STANDARD CONDITIONS:

Pressure	14.7	PSIA
Temperature	68	deg F
Relative Humidity	36	%

INPUT CONDITIONS:

Actual Inlet Volume	1200	ICFM +/-5 %
Standard Volume	750	SCFM
Mass/Weight Flow	56.22	#/min +/-5 %
System Inlet Pressure	10	in Hg Vac
Inlet Pressure Loss	22.0	in H2O
Blower Inlet Pressure	11.62	in Hg Vac
Blower Discharge Pressure	15.24	PSIA
Discharge Pressure Loss	15.0	in H2O
System Discharge Pressure	14.7	PSIA
Inlet Temperature	55	deg F

SELECTED UNIT DETAIL:

Model	711	URAI	
Speed	1895	RPM	92.4%
Blower Differential Pressure	6.23	PSI	62.3%
Power at Blower Shaft	39.18	BHP	+/- 4%
Temperature Rise	115	deg F	51.0%
Discharge Temperature	170	deg F	
System Discharge Volume	868	ACFM	
Relief Valve Setting	NO RELIEF VALVE SPECIFIED		
V-Belt: Est. B10 Brg Life:	367013	hours	
Coupling: Est. B10 Brg Life:	389034	hours	
Est. Free Field Noise	92.8	dBa	

Measured as sound pressure level per ISO 2151:2004E with +/-3 dBA tolerance.

DRESSER Roots

The original ROOTS blower still leads the way™

Universal RAI®, URAI-DSL, URAI-J™-DSL, URAI-G™ and Metric Series

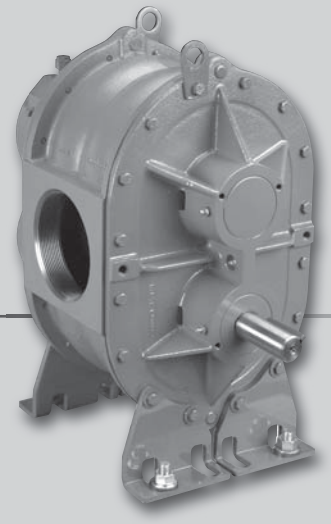

Installation, Operation & Maintenance

Contents

Information Summary 1
Safety Precautions.....3
Operating Limitations.....3
Installation 4-6
Technical Supplement for URAI-G blowers 7
Lubrication 8, 9, 17
Operation 10
Troubleshooting.....11
Inspection & Maintenance.....12
Figures 13-16
Tables 16-17
Assembly Drawings 18-23
Parts List 24-25
Basic Connection & Drive Shaft Information..... 26-28

Do These Things To Get The Most From Your ROOTS™ blower

- ❏ Check shipment for damage. If found, file claim with carrier and notify Roots.
- ❏ Unpack shipment carefully, and check contents against Packing List. Notify Roots if a shortage appears.
- ❏ Store in a clean, dry location until ready for installation. Lift by methods discussed under INSTALLATION to avoid straining or distorting the equipment. Keep covers on all openings. Protect against weather and corrosion if outdoor storage is necessary.
- ❏ Read OPERATING LIMITATIONS and INSTALLATION sections in this manual and plan the complete installation.
- ❏ Provide for adequate safeguards against accidents to persons working on or near the equipment during both installation and operation. See SAFETY PRECAUTIONS.
- ❏ Install all equipment correctly. Foundation design must be adequate and piping carefully done. Use recommended accessories for operating protection.
- ❏ **Make sure both driving and driven equipment is correctly lubricated before start-up. See LUBRICATION.**
- ❏ Read starting check points under OPERATION. Run equipment briefly to check for installation errors and make corrections. Follow with a trial run under normal operating conditions.
- ❏ In event of trouble during installation or operation, do not attempt repairs of Roots furnished equipment. Notify Roots, giving all nameplate information plus an outline of operating conditions and a description of the trouble. Unauthorized attempts at equipment repair may void Roots warranty.
- ❏ Units out of warranty may be repaired or adjusted by the owner. Good inspection and maintenance practices should reduce the need for repairs.

NOTE: Information in this manual is correct as of the date of publication. Roots reserves the right to make design or material changes without notice, and without obligation to make similar changes on equipment of prior manufacture.

For your nearest Roots Office, dial our Customer Service Hot Line toll free; 1 877 363 ROOT(S) (7668) or direct 832-590-2600.

ISRB-2002 rev. 0710

Roots products are sold subject to the current General Terms of Sale, GTS-5001 and Warranty Policy WP-5020. Copies are available upon request.
Contact your local Roots Office or Roots Customer Service Hot Line 1-877-363-ROOT(S) (7668) or direct 281-966-4700.

Safety Precautions

It is important that all personnel observe safety precautions to minimize the chances of injury. Among many considerations, the following should be particularly noted:

- Blower casing and associated piping or accessories may become hot enough to cause major skin burns on contact.
- Internal and external rotating parts of the blower and driving equipment can produce serious physical injuries. Do not reach into any opening in the blower while it is operating, or while subject to accidental starting. Protect external moving parts with adequate guards.
- Disconnect power before doing any work, and avoid bypassing or rendering inoperative any safety or protective devices.
- If blower is operated with piping disconnected, place a strong coarse screen over the inlet and avoid standing in the discharge air stream. **CAUTION: Never cover the blower inlet with your hand or other part of body.**
- Stay clear of the blast from pressure relief valves and the suction area of vacuum relief valves.
- Use proper care and good procedures in handling, lifting, installing, operating and maintaining the equipment.
- Casing pressure must not exceed 25 PSI (1725 mbar) gauge. Do not pressurize vented cavities from an external source, nor restrict the vents without first consulting Roots.
- Do not use air blowers on explosive or hazardous gases.
- Other potential hazards to safety may also be associated with operation of this equipment. All personnel working in or passing through the area should be trained to exercise adequate general safety precautions.

Operating Limitations

A ROOTS™ blower or exhauster must be operated within certain approved limiting conditions to enable continued satisfactory performance. Warranty is contingent on such operation.

Maximum limits for pressure, temperature and speed are specified in TABLE 1 for various models & sizes of blowers & exhausters. These limits apply to all units of normal construction, when operated under standard atmospheric conditions. Be sure to arrange connections or taps for instruments, thermometers and pressure or vacuum gauges at or near the inlet and discharge connections of the unit. These, along with a tachometer, will enable periodic checks of operating conditions.

PRESSURE – The pressure rise, between inlet and discharge, must not exceed the figure listed for the specific unit frame size concerned. Also, in any system where the unit inlet is at a positive pressure above atmosphere a maximum case rating of 25 PSI gauge (1725 mbar) should not be exceeded without first consulting Roots. Never should the maximum allowable differential pressure be exceeded.

On vacuum service, with the discharge to atmospheric pressure, the inlet suction or vacuum must not be greater than values listed for the specific frame size.

TEMPERATURE – Blower & exhauster frame sizes are approved only for installations where the following temperature limitations can be maintained in service:

- Measured temperature rise must not exceed listed values when the inlet is at ambient temperature. Ambient is considered as the general temperature of the space around the unit. This is not outdoor temperature unless the unit is installed outdoors.
- If inlet temperature is higher than ambient, the listed allowable temperature rise values must be reduced by 2/3 of the difference between the actual measured inlet temperature and the ambient temperature.
- The average of the inlet and discharge temperature must not exceed 250°F. (121°C).
- The ambient temperature of the space the blower/motor is installed in should not be higher than 120°F (48.8°C).

SPEED – These blowers & exhausters may be operated at speeds up to the maximum listed for the various frame sizes. They may be direct coupled to suitable constant speed drivers if pressure/temperature conditions are also within limits. At low speeds, excessive temperature rise may be a limiting factor.

Special Note: The listed maximum allowable temperature rise for any particular blower & exhauster may occur well before its maximum pressure or vacuum rating is reached. This may occur at high altitude, low vacuum or at very low speed. The units' operating limit is always determined by the maximum rating reached first. It can be any one of the three: Pressure, Temperature or Speed.

Installation

ROOTS blowers & exhausters are treated after factory assembly to protect against normal atmospheric corrosion. The maximum period of internal protection is considered to be one year under average conditions, if shipping plugs & seals are not removed. Protection against chemical or salt water atmosphere is not provided. Avoid opening the unit until ready to start installation, as corrosion protection will be quickly lost due to evaporation.

If there is to be an extended period between installation and start up, the following steps should be taken to ensure corrosion protection.

- ❏ Coat internals of cylinder, gearbox and drive end bearing reservoir with Nox-Rust VCI-10 or equivalent. Repeat once a year or as conditions may require. Nox-Rust VCI-10 is petroleum soluble and does not have to be removed before lubricating. It may be obtained from Daubert Chemical Co., 2000 Spring Rd., Oak Brook, Ill. 60521.
- ❏ Paint shaft extension, inlet and discharge flanges, and all other exposed surfaces with Nox-Rust X-110 or equivalent.
- ❏ Seal inlet, discharge, and vent openings. It is not recommended that the unit be set in place, piped to the system, and allowed to remain idle for extended periods. If any part is left open to the atmosphere, the Nox-Rust VCI-10 vapor will escape and lose its effectiveness.
- ❏ Protect units from excessive vibration during storage.
- ❏ Rotate shaft three or four revolutions every two weeks.
- ❏ Prior to start up, remove flange covers on both inlet and discharge and inspect internals to insure absence of rust. Check all internal clearances. Also, at this time, remove gearbox and drive end bearing cover and inspect gear teeth and bearings for rust.

Because of the completely enclosed unit design, location of the installation is generally not a critical matter. A clean, dry and protected indoor location is preferred. However, an outdoor location will normally give satisfactory service. Important requirements are that the correct grade of lubricating oil be provided for expected operating temperatures, and that the unit be located so that routine checking and servicing can be performed conveniently. Proper care in locating driver and accessory equipment must also be considered.

Supervision of the installation by a ROOTS Service Engineer is not usually required for these units. Workmen with experience in installing light to medium weight machinery should be able to produce satisfactory results. Handling of the equipment needs to be accomplished with care, and in compliance with safe practices. Unit mounting must be solid, without strain or twist, and air piping must be clean, accurately aligned and properly connected.

Bare-shaft Units: Two methods are used to handle a unit without base. One is to use lifting lugs bolted into the top of the unit headplates. Test them first for tightness and fractures by tapping with a hammer. In lifting, keep the direction of cable pull on these bolts as nearly vertical as possible. If lifting lugs are not available, lifting slings may be passed under the cylinder adjacent to the headplates. Either method prevents strain on the extended drive shaft.

Packaged Units: When the unit is furnished mounted on a baseplate, with or without a driver, use of lifting slings passing under the base flanges is required. Arrange these slings so that no strains are placed on the unit casing or mounting feet, or on any mounted accessory equipment. DO NOT use the lifting lugs in the top of the unit headplates.

Before starting the installation, remove plugs, covers or seals from unit inlet and discharge connections and inspect the interior completely for foreign material. If cleaning is required, finish by washing the cylinder, headplates and impeller thoroughly with an appropriate solvent. Turn the drive shaft by hand to make sure that the impellers turn freely at all points. Anti-rust compound on the connection flanges and drive shaft extension may also be removed at this time with the same solvent. Cover the flanges until ready to connect piping.

Mounting

Care will pay dividends when arranging the unit mounting. This is especially true when the unit is a “bare-shaft” unit furnished without a baseplate. The convenient procedure may be to mount such a unit directly on a floor or small concrete pad, but this generally produces the least satisfactory results. It definitely causes the most problems in leveling and alignment and may result in a “Soft Foot” condition. Correct soft foot before operation to avoid unnecessary loading on the casing and bearings. Direct use of building structural framing members is not recommended.

For blowers without a base, it is recommended that a well anchored and carefully leveled steel or cast iron mounting plate be provided. The plate should be at least 1 inch (25 mm) thick, with its top surface machined flat, and large enough to provide leveling areas at one side and one end after the unit is mounted. It should have properly sized studs or tapped holes located to match the unit foot drilling. Proper use of a high quality machinist’s level is necessary for adequate installation.

With the mounting plate in place and leveled, set the unit on it without bolting and check for rocking. If it is not solid, determine the total thickness of shims required under one foot to stop rocking. Place half of this under each of the diagonally-opposite short feet, and tighten the mounting studs or screws. Rotate the drive shaft to make sure the impellers turn freely. If the unit is to be direct coupled to a driving motor, consider the height of the motor shaft and the necessity for it to be aligned very accurately with the unit shaft. Best unit arrangement is directly bolted to the mounting plate while the driver is on shims of at least 1/8 inch (3mm) thickness. This allows adjustment of motor position in final shaft alignment by varying the shim thickness.

Aligning

When unit and driver are factory mounted on a common baseplate, the assembly will have been properly aligned and is to be treated as a unit for leveling purposes. Satisfactory installation can be obtained by setting the baseplate on a concrete

slab that is rigid and free of vibration, and leveling the top of the base carefully in two directions so that it is free of twist. The slab must be provided with suitable anchor bolts. The use of grouting under and partly inside the leveled and shimmed base is recommended.

It is possible for a base-mounted assembly to become twisted during shipment, thus disturbing the original alignment. For this reason, make the following checks after the base has been leveled and bolted down. Disconnect the drive and rotate the unit shaft by hand. It should turn freely at all points. Loosen the unit foot hold-down screws and determine whether all feet are evenly in contact with the base. If not, insert shims as required and again check for free impeller rotation. Finally, if unit is direct coupled to the driver, check shaft and coupling alignment carefully and make any necessary corrections.

In planning the installation, and before setting the unit, consider how piping arrangements are dictated by the unit design and assembly. Drive shaft rotation must be established accordingly and is indicated by an arrow near the shaft.

Typical arrangement on vertical units has the drive shaft at the top with counterclockwise rotation and discharge to the left. Horizontal units are typically arranged with the drive shaft at the left with counterclockwise rotation and discharge down. See Figure 4 for other various unit arrangements and possible conversions.

When a unit is DIRECT COUPLED to its driver, the driver RPM must be selected or governed so as not to exceed the maximum speed rating of the unit. Refer to Table 1 for allowable speeds of various unit sizes.

A flexible type coupling should always be used to connect the driver and unit shafts.

When direct coupling a motor or engine to a blower you must insure there is sufficient gap between the coupling halves and the element to prevent thrust loading the blower bearings. When a motor, engine or blower is operated the shafts may expand axially. If the coupling is installed in such a manner that there is not enough room for expansion the blower shaft can be forced back into the blower and cause the impeller to contact the gear end headplate resulting in damage to the blower. The two shafts must be in as near perfect alignment in all directions as possible, and the gap must be established with the motor armature on its electrical center if end-play exists. Coupling manufacturer's recommendations for maximum misalignment, although acceptable for the coupling, are normally too large to achieve smooth operation and maximum life of the blower.

The following requirements of a good installation are recommended. When selecting a coupling to be fitted to the blower shaft ROOTS recommends a taper lock style coupling to insure proper contact with the blower shaft. If the coupling must have a straight bore the coupling halves must be fitted to the two shafts with a line to line thru .001" interference fit. Coupling halves must be warmed up per coupling manufacturer's recommendations. Maximum deviation in offset alignment of the shafts should not exceed .005" (.13 mm) total indicator reading, taken on the two coupling hubs. Maximum deviation from parallel of the inside coupling faces should not exceed .001" (.03 mm) when checked at six points around the coupling.

When a unit is BELT DRIVEN, the proper selection of sheave diameters will result in the required unit speed. When selecting a sheave to be fitted to the blower shaft ROOTS recommends a taper lock style sheave to insure proper contact with the blower shaft. This flexibility can lead to operating temperature problems caused by unit speed being too low. Make sure the drive speed selected is within the allowable range for the specific unit size, as specified under Table 1.

Belt drive arrangements usually employ two or more V-belts running in grooved sheaves. Installation of the driver is less critical than for direct coupling, but its shaft must be level and parallel with the unit shaft. **The driver should be mounted on the inlet side of a vertical unit (horizontal piping) and on the side nearest to the shaft on a horizontal unit. SEE PAGE 6 - Acceptable Blower Drive Arrangement Options.** The driver must also be mounted on an adjustable base to permit installing, adjusting and removing the V-belts. To position the driver correctly, both sheaves need to be mounted on their shafts and the nominal shaft center distance known for the belt lengths to be used.

CAUTION: Drive couplings and sheaves (pulleys) should have an interference fit to the shaft of the blower (set screw types of attachment generally do not provide reliable service.) It is recommended that the drive coupling or sheave used have a taper lock style bushing which is properly sized to provide the correct interference fit required. Drive couplings, that require heating to fit on the blower shaft, should be installed per coupling manufacturer recommendations. A drive coupling or sheave should not be forced on to the shaft of the blower as this could affect internal clearances resulting in damage to the blower.

Engine drive applications often require special consideration to drive coupling selection to avoid harmful torsional vibrations. These vibrations may lead to blower damage if not dampened adequately. It is often necessary to install a fly-wheel and/or a torsionally soft elastic element coupling based on the engine manufacturer recommendations.

The driver sheave should also be mounted as close to its bearing as possible, and again should fit the shaft correctly. Position the driver on its adjustable base so that 2/3 of the total movement is available in the direction away from the unit, and mount the assembly so that the face of the sheave is accurately in line with the unit sheave. This position minimizes belt wear, and allows sufficient adjustment for both installing and tightening the belts. After belts are installed, adjust their tension in accordance with the manufacturer's instructions. However, only enough tension should be applied to prevent slippage when the unit is operating under load. Excessive tightening can lead to early bearing concerns or shaft breakage.

Before operating the drive under power to check initial belt tension, first remove covers from the unit connections. Make sure the interior is still clean, then rotate the shaft by hand.

Acceptable Blower Drive Arrangement Options

Acceptable

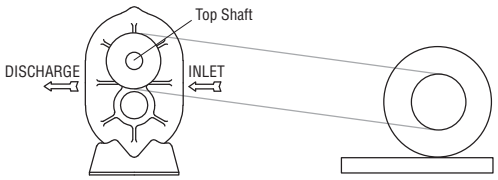

Motor On Inlet Side of Blower (Top Shaft)

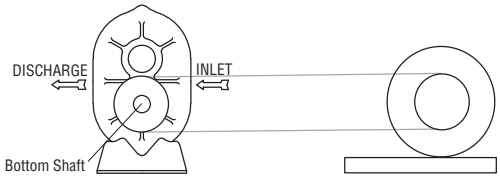

Motor On Inlet Side of Blower (Bottom Shaft)

Unacceptable

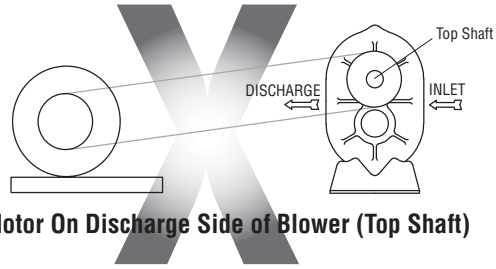

Motor On Discharge Side of Blower (Top Shaft)

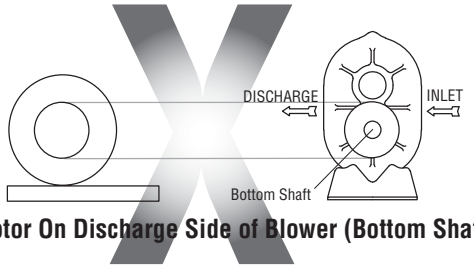

Motor On Discharge Side of Blower (Bottom Shaft)

Place a coarse screen over the inlet connection to prevent anything being drawn into the unit while it is operating, and avoid standing in line with the discharge opening. Put oil in the sumps per instructions under **LUBRICATION**.

Piping

Before connecting piping, remove any remaining anti-rust compound from unit connections. Clean pipe should be no smaller than unit connections. In addition, make sure it is free of scale, cuttings, weld beads, or foreign material of any kind. To further guard against damage to the unit, especially when an inlet filter is not used, install a substantial screen of 16 mesh backed with hardware cloth at or near the inlet connections. Make provisions to clean this screen of collected debris after a few hours of operation. It should be removed when its usefulness has ended, as the wire will eventually deteriorate and small pieces going into the unit may cause serious damage.

Pipe flanges or male threads must meet the unit connections accurately and squarely. DO NOT attempt to correct misalignment by springing or cramping the pipe. In most cases this will distort the unit casing and cause impeller rubbing. In severe cases it can prevent operation or result in a broken drive shaft. For similar reasons, piping should be supported near the unit to eliminate dead weight strains. Also, if pipe expansion is likely to occur from temperature change, installation of flexible connectors or expansion joints is advisable.

Figure 3 represents an installation with all accessory items that might be required under various operating conditions. Inlet piping should be completely free of valves or other restrictions. When a shut-off valve can not be avoided, make sure a full size vacuum relief is installed nearest the unit inlet. This will protect against unit overload caused by accidental closing of the shut-off valve.

Need for an inlet silencer will depend on unit speed and pressure, as well as sound-level requirements in the general surroundings. An inlet filter is recommended, especially in dusty or sandy locations. A discharge silencer is also normally suggested, even though WHISPAIR™ units operate at generally lower noise levels than conventional rotary blowers. Specific recommendations on silencing can be obtained from your local ROOTS distributor.

Discharge piping requires a pressure relief valve, and should include a manual unloading valve to permit starting the unit under no-load conditions. Reliable pressure/vacuum gauges and good thermometers at both inlet and discharge are recommended to allow making the important checks on unit operating conditions. The back-pressure regulator shown in Figure 3 is useful mainly when volume demands vary while the unit operates at constant output. If demand is constant, but somewhat lower than the unit output, excess may be blown off through the manual unloading valve.

In multiple unit installations where two or more units operate with a common header, use of check valves is mandatory. These should be of a direct acting or free swinging type, with one valve located in each line between the unit and header. Properly installed, they will protect against damage from reverse rotation caused by air and material back-flow through an idle unit.

After piping is completed, and before applying power, rotate the drive shaft by hand again. If it does not move with uniform freedom, look for uneven mounting, piping strain, excessive belt tension or coupling misalignment.

DO NOT operate the unit at this time unless it has been lubricated per instructions.

Technical Supplement for URAI-G™ Gas Blowers

Technical Supplement for 32, 33, 36, 42, 45, 47, 53, 56, 59, 65, 68, 615 Universal RAI-GAS blowers

Precaution: URAI-GAS blowers: Care must be used when opening the head plate seal vent chamber plugs (43) as some gas will escape–if it is a pressure system, or the atmospheric air will leak into the blower if the system is under vacuum. There is a possibility of some gas leakage through the mechanical seals. This leakage on the gear end will escape through the gear box vent, and on the drive end, through the grease release fittings. If the gas leakage is undesirable, each seal chamber must be purged with an inert gas through one purge gas hole (43) per seal. There are two plugged purge gas holes (1/8 NPT) provided per seal. The purge gas pressure must be maintained one PSI above the discharge gas pressure. Also, there exists a possibility of gear end oil and drive end grease leakage into the gas stream.

ROOTS Universal RAI-GAS rotary positive gas blowers are a design extension of the basic Universal RAI blower model. URAI-GAS blower uses (4) mechanical seals in place of the standard inboard lip seals to minimize gas leakage into the atmosphere.

These units are intended for gases which are compatible with cast iron case material, steel shafts, 300/400 series stainless steel and carbon seal components, viton o-rings and the oil/grease lubricants. If there are any questions regarding application or operation of this gas blower, please contact factory.

A simple but very effective lubrication system is employed on the drive shaft end bearings. Hydraulic pressure relief fittings are provided to vent any excess grease, preventing pressure build-up on the seals. A restriction plug and metering orifice prevent loss of lubricant from initial surges in lubricant pressure but permit venting excess lubricant under steadily rising pressures.

Using a pressure gun, slowly force new lubricant into each drive end bearing housing until traces of clean grease comes out of the relief fitting. The use of an electric or pneumatic grease gun could force the grease in too rapidly and thus invert the seals and should not be used.

Gear end bearings, gears and oil seals are lubricated by the action of the timing gears which dip into the main oil sumps causing oil to splash directly on gears and into bearings and seals. A drain port is provided below each bearing to prevent an excessive amount of oil in the bearings. Seals located inboard of the bearings in each headplate effectively retain oil within the sumps. Any small weepage that may occur should the seals wear passes into a cavity in each vented headplate and is drained downward.

Proper lubrication is usually the most important single consideration in obtaining maximum service life and satisfactory operation from the unit. Unless operating conditions are severe, a weekly check of oil level and necessary addition of lubricant should be sufficient.

During the first week of operation, check the oil levels in the oil sumps about once a day, and watch for leaks. Replenish as necessary. Thereafter, an occasional check should be sufficient.

More frequent oil service may be necessary if the blower is operated in a very dusty location.

Lubrication

Due to sludge build-up and seal leakage problems, Roots recommendation is DO NOT USE Mobil SHC synthetic oils in ROOTS blowers.

Proper lubrication is usually the most important single consideration in obtaining maximum service life and satisfactory operation from the unit.

URAI AIR and GAS gear end bearing lubrication/oil with splash lubrication on the gear end only (Drive end grease lubricated).

- The specified and recommended oil is ROOTS™ Synthetic oil of correct viscosity per Table 2, page 17.
- To fill the gearbox, remove the breather plug (25) and the oil overflow plug (21) - see page 15. Fill the reservoir up to the overflow hole. **DO NOT OVERFILL**. Place the breather and the overflow plug back into their respective holes.
- The lubrication should be changed after initial 100 hours of operation.
- Proper service intervals of the oil thereafter are based on the discharge air temperature of the blower. Please refer to the information below to "How to properly determine the oil service intervals" shown on this page.
- Unless operating conditions are quite severe, a weekly check of the oil level and necessary addition of lubricant should be sufficient. During the first week of operation, check the oil levels in the oil sumps about once a day, and watch for leaks. Replenish as necessary.
- If you choose to use another oil other than the specified and recommended ROOTS™ Synthetic, use a good grade of industrial type non-detergent, rust inhibiting, anti-foaming oil and of correct viscosity per Table 2, page 17.
- Roots does NOT recommend the use of automotive type lubricants, as they are not formulated with the properties mentioned above.

URAI-DSL blowers with splash lubrication/oil on each end. No grease.

- The specified and recommended oil is ROOTS™ Synthetic oil of correct viscosity per Table 2, page 17.
- The proper oil level should be half way or middle of the sight gauge when the blower is not operating. **DO NOT OVERFILL OIL SUMP/S** as damage to the blower may occur.
- Oil level may rise or fall in the gauge during operation to an extent depending somewhat on oil temperature and blower speed.
- The oil level should not fall below the middle of the site gauge when the blower is idle.
- The lubrication/oil level may rise or fall in the gauge during operation to an extent depending somewhat on oil temperature and blower speed.
- The lubrication should be changed after initial 100 hours of operation.
- Proper service intervals of the oil thereafter are based on the discharge air temperature of the blower. Please refer to the information below to "How to properly determine the oil service intervals" shown on this page
- Unless operating conditions are quite severe, a weekly check of the oil level and necessary addition of lubricant should be sufficient. During the first week of operation, check the oil levels in the oil sumps about once a day, and watch for leaks. Replenish as necessary.
- If you choose to use another oil other than the specified and recommended ROOTS™ Synthetic, use a good grade of **industrial type** non-detergent, rust inhibiting, anti-foaming oil and of correct viscosity per Table 2, page 17.
- Roots does **NOT** recommend the use of automotive type lubricants, as they are not formulated with the properties mentioned above.

How to properly determine the oil service intervals.

Normal life expectancy of the specified and recommended ROOTS™ Synthetic oil is approximately 6000 hours with an oil temperature of 180°F (82°C) or less. As the oil temperature increases by increments of 15°F (8°C), the oil life is reduced by half for each 15°F (8°C) increase. Example: Oil temperatures of 195°F (90.5°C) will produce a life expectancy reduced by half or 3000 hours oil service life.

Normal life expectancy of petroleum based oils is about 2000 hours with an oil temperature of about 180°F (82°C). As the oil temperature increases by increments of 15°F (8°C), the life is reduced by half for each 15°F (8°C) increase. Example: Oil temperatures of 195°F (90.5°C) will produce life expectancy reduced by half or 1000 hours oil service life.

NOTE: To estimate oil temperature, multiply the discharge temperature of the blower by 0.80. Example: if the discharge air temperature of the blower is 200° F, it is estimated that the oil temperature is 160° F

For Units with grease lubricated drive end bearings.

URAI AIR (Non GAS) blower grease specifications.

- When servicing drive end bearings of a AIR (Non Gas) blower, use the specified and recommended Shell Darina SD 2 NLGI #2 product code 5067628.
- For grease lubricated drive end blowers see page 17, table 4, regarding specified greasing intervals.
- Lithium based greases are not compatible with the specified and recommended Shell Darina SD 2 grease used when assembling the blower. **Lithium based grease is not approved for any ROOTS blowers.**
- Table 4 page 17 has been prepared as a general greasing schedule guide based on average operating conditions. More frequent intervals may be necessary

depending on the grease operating temperature and unusual circumstances.

URAI GAS blower grease specifications.

- When servicing drive end bearings of a URAI GAS blower, use the specified NLGI #2 premium grade aluminum complex* grease, ROOTS P/N T20019001.
- Lithium based greases are not compatible with the specified and recommended ROOTS Synthetic grease used when assembling a GAS blower. **Lithium based grease is not approved for any ROOTS blowers.**
- Lithium based greases are not compatible with the specified and recommended ROOTS Synthetic grease used when assembling a GAS blower. **Lithium based grease is not approved for any ROOTS blowers.**
- The lubricants selected must be compatible with the gas.

*ROOTS Synthetic Oil & Grease is superior in performance to other synthetic lubrications. It has high oxidation stability, excellent corrosion protection, extremely high film strength and low coefficient of friction.

*ROOTS™ Synthetic oil is superior in performance to petroleum based products. It has high oxidation stability, excellent corrosion protection, extremely high film strength and low coefficient of friction. Typical oil change intervals are increased 2-3 times over petroleum based lubricants. Also, ROOTS™ Synthetic oil is 100% compatible with petroleum based oils. Simply drain the oil in the blower and refill the reservoirs with ROOTS™ Synthetic oil to maintain optimum performance of your ROOTS™ blower.

Operation

Before operating a blower under power for the first time, recheck the unit and the installation thoroughly to reduce the likelihood of avoidable troubles. Use the following procedure check list as a guide, but consider any other special conditions in the installation.

- ❏ Be certain that no bolts, tools, rags, or debris have been left in the blower air chamber or piping.
- ❏ If an outdoor intake without filter is used, be sure the opening is located so it cannot pick up dirt and is protected by a strong screen or grille. Use of the temporary protective screen as described under INSTALLATION is strongly recommended.
- ❏ Recheck blower leveling, drive alignment and tightness of all mounting bolts if installation is not recent. If belt drive is used, adjust belt tension correctly.
- ❏ Turn drive shaft by hand to make sure impellers still rotate without bumping or rubbing at any point.
- ❏ Ensure oil levels in the main oil sumps are correct.
- ❏ Check lubrication of driver. If it is an electric motor, be sure that power is available and that electrical overload devices are installed and workable.
- ❏ Open the manual unloading valve in the discharge air line. If a valve is in the inlet piping, be sure it is open.
- ❏ Bump blower a few revolutions with driver to check that direction of rotation agrees with arrow near blower shaft, and that both coast freely to a stop.

After the preceding points are cleared, blower is ready for trial operation under “no-load” conditions. The following procedure is suggested to cover this initial operation test period.

a. Start blower, let it accelerate to full speed, then shut off. Listen for knocking sounds, both with power on and as speed slows down.

b. After blower comes to a complete stop, repeat above, but let blower run 2 or 3 minutes. Check for noises, such as knocking sounds.

c. After blower comes to a complete stop, operate blower for about 10 minutes unloaded. Check oil levels. Observe cylinder and headplate surfaces for development of hot spots such as burned paint, indicating impeller rubs. Be aware of any noticeable increase in vibration.

Assuming that all trials have been satisfactory, or that necessary corrections have been made, the blower should now have a final check run of at least one hour under normal operating conditions. After blower is restarted, gradually close the discharge unloading valve to apply working pressure. At this point it is recommended that a pressure gauge or manometer be connected into the discharge line if not already provided, and that thermometers be in both inlet and discharge lines. Readings from these instruments will show whether pressure or temperature ratings of the blower are being exceeded.

During the final run, check operating conditions frequently and observe the oil levels at reasonable intervals. If excessive noise or local heating develops, shut down immediately and determine the cause. If either pressure rise or temperature rise across the blower exceeds the limit specified in this manual, shut down and investigate conditions in the piping system. Refer to the TROUBLESHOOTING CHECKLIST for suggestions on various problems that may appear.

The blower should now be ready for continuous duty operation at full load. During the first few days make periodic checks to determine whether all conditions remain steady, or at least acceptable. This may be particularly important if the blower is supplying air to a process system where conditions can vary. At the first opportunity, stop the blower and clean the temporary inlet protective screen. If no appreciable amount of debris has collected, the screen may be removed. See comments under INSTALLATION. At this same time, verify leveling, coupling alignment or belt tension, and mounting bolt tightness.

Should operating experience prove that blower capacity is a little too high for the actual air requirements, a small excess may be blown off continuously through the manual unloading or vent valve. Never rely on the pressure relief valve as an automatic vent. Such use may cause the discharge pressure to become excessive, and can also result in unsafe operation of the valve itself. If blower capacity appears to be too low, refer to the TROUBLESHOOTING CHECKLIST.

Vibration Assessment Criteria

With measurements taken at the bearing locations on the housings, see chart below for an appropriate assessment guide for rotary lobe blowers rigidly mounted on stiff foundations.

In general, blower vibration levels should be monitored on a regular basis and the vibration trend observed for progressive or sudden change in level. If such a change occurs, the cause should be determined through spectral analysis.

As shown on the chart below, the level of all pass vibration will determine the need to measure discrete frequency vibration levels and the action required.

All Pass Vibration (in/sec)	Discrete Frequency Vibration (in/sec)	Action
0.45 or less	N/R	Acceptable
Greater than 0.45 but 1.0 or less	0.45 or less @ any frequency	Acceptable
	Greater than 0.45 @ any frequency	Investigate
Greater than 1.0	Less than 1.0	Investigate
	Greater than 1.0	Investigate

Troubleshooting Checklist

Trouble	Item	Possible Cause	Remedy
No flow	1	Speed too low	Check by tachometer and compare with published performance.
	2	Wrong rotation	Compare actual rotation with Figure 1, change driver if wrong.
	3	Obstruction in piping	Check piping, valves, silencer to assure open flow path.
Low capacity	4	Speed too low	See item 1, if belt drive, check for slippage and re-adjust tension.
	5	Excessive pressure rise	Check inlet vacuum and discharge pressure and compare with published performance.
	6	Obstruction in piping	See item 3.
	7	Excessive slip	Check inside of casing for worn or eroded surfaces causing excessive clearances
Excessive power	8	Speed too high	Check speed and compare with published performance.
	9	Excessvie pressure rise	See item 5
	10	Impeller rubbing	Inspect outside of cylinder for high temperature areas, then check for impeller contact at these points. Correct blower mounting, drive alignment.
	11	Scale , sludge, rust or product build up	Clean blower appropriately
Damage to bearings or gears	12	Inadequate lubrication	Check oil sump levels in gear and drive end headplates
	13	Excessive lubrication	Check oil levels. If correct, drain and refill with clean oil of recommended grade.
	14	Excessive pressure rise	See item 5.
	15	Coupling misalignment	Check carefully. Re-align if questionable.
	16	Excessive belt tension	Re-adjust for correct tension.
Vibration	17	Misalignment	See item 15
	18	Impellers rubbing	See item 10
	19	Worn bearings/gears	Check gear backlash and conditions of bearings and replace as indicated.
	20	Unbalanced or rubbing impeller	Scale or process material may build up on casing and impellers, or inside impellers. Remove build-up to restore original clearances and impeller balance.
	21	Driver or blower loose	Tighten mounting bolts securely.
	22	Piping resonances	Determine whether standing wave pressure pulsations are present in the piping.
	23	Scale/sludge build-ups	Clean out interior of impeller lobes to restore dynamic balance.
Driver stops, or will not start	24	Casing strain	Re-work piping alignment to remove excess strain
	25	Impeller stuck	Check for excessive hot spot on headplate or cynlinder. See item 10. Look for defective shaft bearing and/or gear teeth.
	26	Scale, sludge, rust or prodcut build-up	Clean blower appropiately
Excessive breather	27	Broken seal	Replace seals
Blow-by or excessive oil leakage to vent area	28	Defective O-ring	Replace seals and O-ring
Excessive oil leakage in vent area	29	Defective/plugged breather	Replace breather and monitor oil leakage
	30	Oil level too high	Check sump levels in gear and drive headplates
	31	Oil type or viscosity incorrect	Check oil to ensure it meets recommendations. Drain then fill with clean oil of recommended grade.
	32	Blower running hot	Check blower operating conditions to ensure they are within the operating limitations defined in this manual.

Inspection & Maintenance : Universal RAI® series blowers

A good program of consistent inspection and maintenance is the most reliable method of minimizing repairs to a blower. A simple record of services and dates will help keep this work on a regular schedule. Basic service needs are:

- Lubrication
- Checking for hot spots
- Checking for increases or changes in vibration and noise
- Recording of operating pressures and temperatures

Above all, a blower must be operated within its specified rating limits, to obtain satisfactory service life.

A newly installed blower should be checked often during the first month of full-time operation. Attention there after may be less frequent assuming satisfactory performance. Lubrication is normally the most important consideration and weekly checks of lubricant levels in the gearbox and bearing reservoirs should be customary. Complete oil change schedules are discussed under **LUBRICATION**.

Driver lubrication practices should be in accordance with the manufacturer's instructions. If direct connected to the blower through a lubricated type coupling, the coupling should be checked and greased each time blower oil is changed. This will help reduce wear and prevent unnecessary vibration. In a belted drive system, check belt tension periodically and inspect for frayed or cracked belts.

In a new, and properly installed, unit there is no contact between the two impellers, or between the impellers and cylinder or headplates. Wear is confined to the bearings (which support and locate the shafts) the oil seals, and the timing gears. All are lubricated and wear should be minimal if clean oil of the correct grade is always used. Seals are subject to deterioration as well as wear, and may require replacement at varying periods.

Shaft bearings are designed for optimum life under average conditions with proper lubrication and are critical to the service life of the blower. Gradual bearing wear may allow a shaft position to change slightly, until rubbing develops between impeller and casing. This will cause spot heating, which can be detected by observing these surfaces. Sudden bearing failure is usually more serious. Since the shaft and impeller are no longer supported and properly located, extensive general damage to the blower casing and gears is likely to occur.

Oil seals should be considered expendable items, to be replaced whenever drainage from the headplate vent cavity becomes excessive or when the blower is disassembled for any reason. Some oil seal leakage may occur since an oil film under the lip is required for proper operation. Periodically leaked oil should be wiped off from surfaces. Minor seal leakage should not be considered as indicating seal replacement.

Timing gear wear, when correct lubrication is maintained, should be negligible. Gear teeth are cut to provide the correct amount of backlash, and gears correctly mounted on the shafts will accommodate a normal amount of tooth wear without permitting contact between lobes of the two impellers. However, too high an oil level will cause churning and excessive heating. This is indicated by unusually high temperature at the bottom of the gear housing. Consequent heating of the gears will result in loss of tooth-clearance , backlash and rapid wear of the gear teeth usually will develop. Continuation of this tooth wear will eventually produce impeller contacts (knocking), and from this point serious damage will be unavoidable if blower operation is continued. A similar situation can be produced suddenly by gear tooth fracture, which is usually brought on by sustained overloading or momentary shock loads.

Problems may also develop from causes other than internal parts failure. Operating clearances within a blower are only a few thousandths of an inch. This makes it possible for impeller interference or casing rubs to result from shifts in the blower mounting, or from changes in piping support. If this type of trouble is experienced, and the blower is found to be clean, try removing mounting strains. Loosen blower mounting bolts and reset the leveling and drive alignment. Then tighten mounting again, and make sure that all piping meets blower connections accurately and squarely Foreign materials in the blower will also cause trouble, which can only be cured by disconnecting the piping and thoroughly cleaning the blower interior.

A wide range of causes & solutions for operating troubles are covered in the **TROUBLE SHOOTING CHECKLIST**. The remedies suggested should be performed by qualified mechanics with a good background. Major repairs generally are to be considered beyond the scope of maintenance, and should be referred to an authorized ROOTS distributor.

Warranty failures should not be repaired at all, unless specific approval has been obtained through ROOTS before starting work. Unauthorized disassembly within the warranty period may void the warranty.

Figure 2 - Allowable Overhung Loads for VX-Belt Drives Universal RAI®/URAI-J™ Units

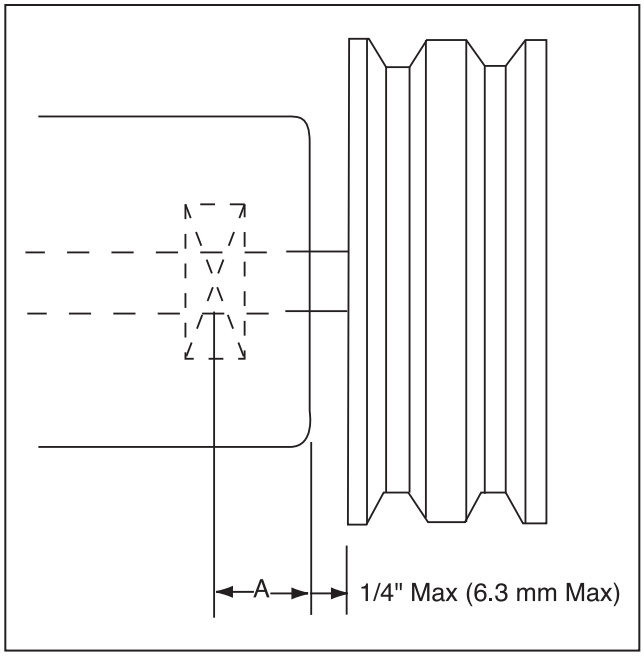

$$\text{Belt Pull in lbs} = \frac{252100 \bullet \text{Motor BHP}}{\text{Blower RPM} \bullet \text{Sheave Diameter in inches}}$$

$$\text{Shaft load (lb.in)} = \text{Belt Pull (lbs)} \bullet \left(A'' + \tfrac{1}{4}'' + \frac{\text{Sheave Width (")}}{2}\right)$$

Frame Size	Dim "A"	Max. Allow. Shaft Load (lb.in)	Min Sheave Diameter	Max. Sheave Width
22, 24	0.61	150	4.00	4
32, 33, 36	0.80	400	5.00	5
42, 45, 47	1.02	730	5.00	5
53, 56, 59	1.13	1,325	6.00	6
65, 68, 615	1.36	2,250	8.00	8
76, 711, 718	1.16	3000	9.50	9.5

NOTE:

Arc of sheave belt contact on the smaller sheave not to be less than 170°

Driver to be installed on the inlet side for vertical units, and on the drive shaft side for horizontal units.

ROOTS recommends the use of two or more 3V, 5V or 8V belts and sheaves.

Acceptable Blower Drive Arrangement Options

Acceptable

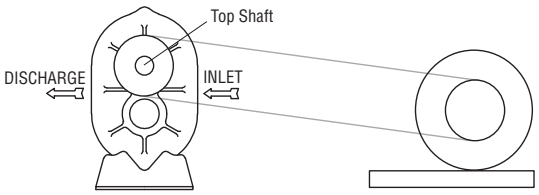

Motor On Inlet Side of Blower (Top Shaft)

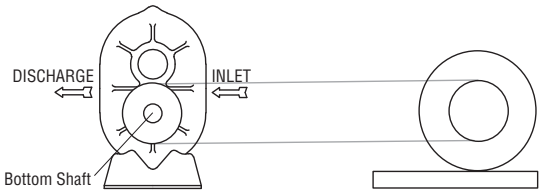

Motor On Inlet Side of Blower (Bottom Shaft)

Unacceptable

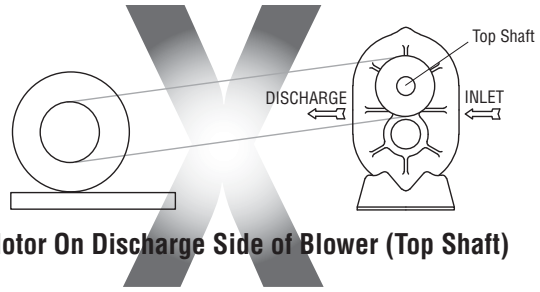

Motor On Discharge Side of Blower (Top Shaft)

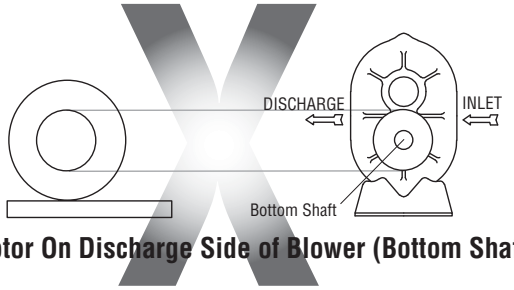

Motor On Discharge Side of Blower (Bottom Shaft)

Above are suggested locations for available accessories.

Figure 3a - Air Blower Installation with Accessories

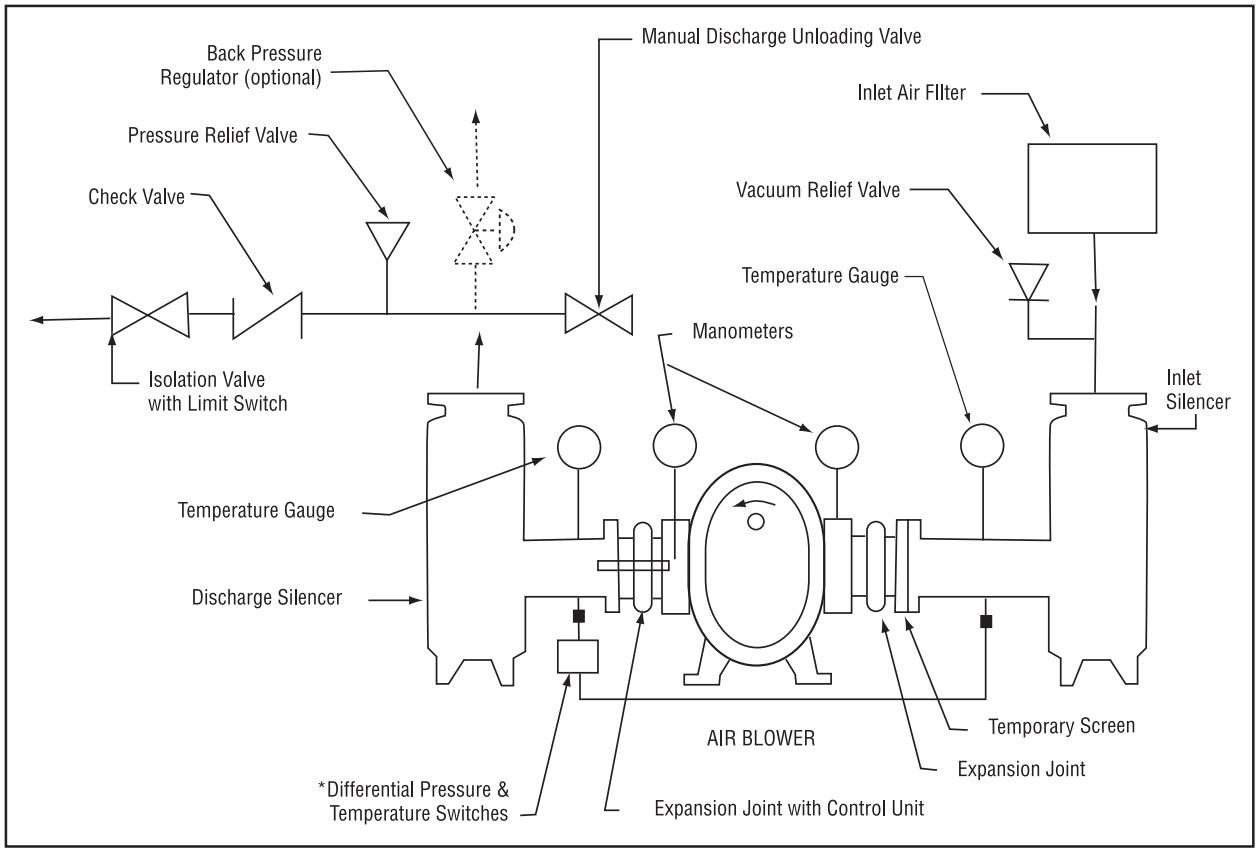

Above are suggested locations for available accessories.

Figure 3b -Gas Blower Installation with Accessories

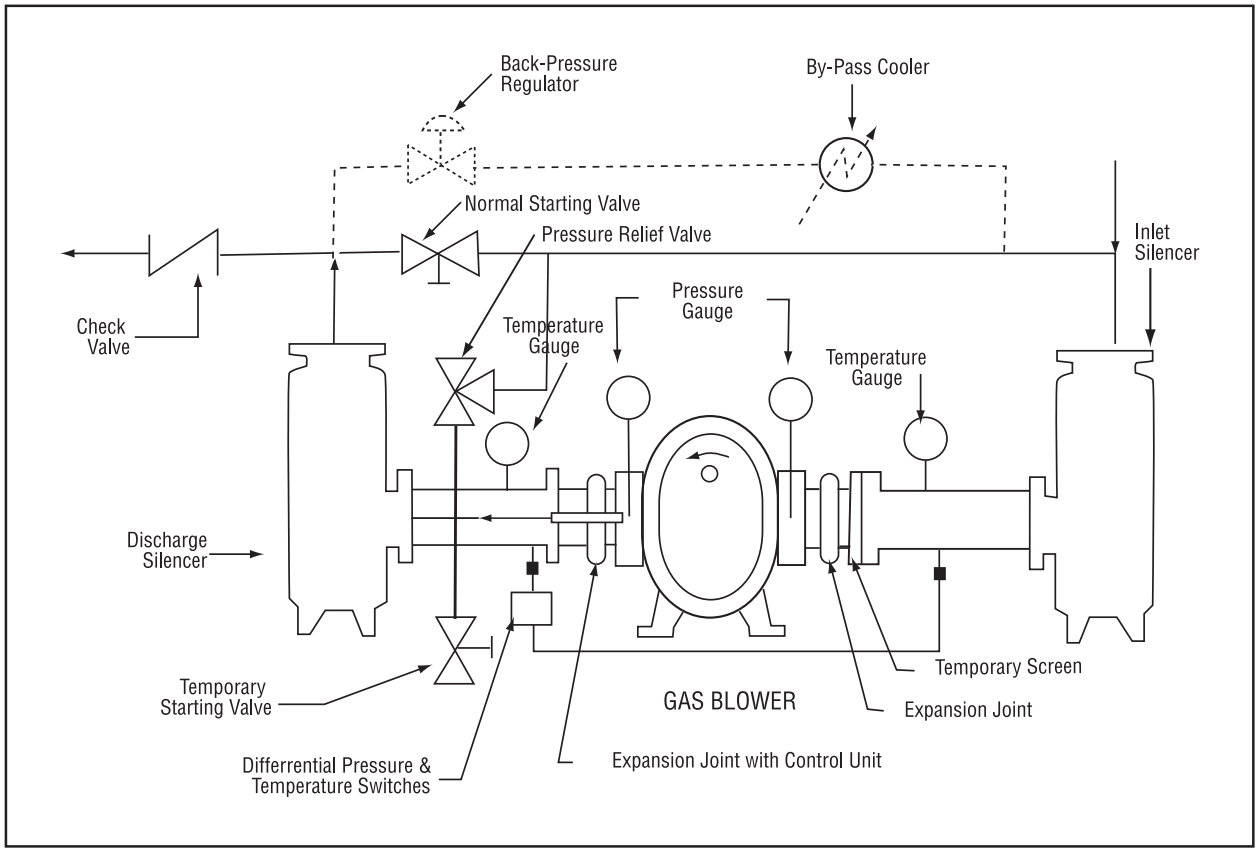

Figure 4 - Blower Orientation Conversion

Model	Reversible Rotation	WHISPAIR™ Design
UNIVERSAL RAI®	Yes	No
URAI-J WHISPAIR®	No	Yes
URAI-G	Yes	No

Special Note: WHISPAIR™ models are designed to operate with only one shaft rotation direction to take full advantage of the WHISPAIR feature. Therefore, a WHISPAIR™ blower may be operated in the following combinations.

- CCW Rotation: Bottom Shaft; Right side discharge or a Left Shaft; Bottom discharge
- CCW Rotation: Top Shaft; Left side discharge or a Right Shaft; Top discharge

or

- CW Rotation: Bottom Shaft; Left side discharge or a Right Shaft Bottom discharge
- CW Rotation: Top Shaft; Right side discharge or a Left Shaft Top discharge

Blower Orientation and Lubrication Points: Grease Lubricated Drive End
Universal RAI series & URAI-G gas blowers

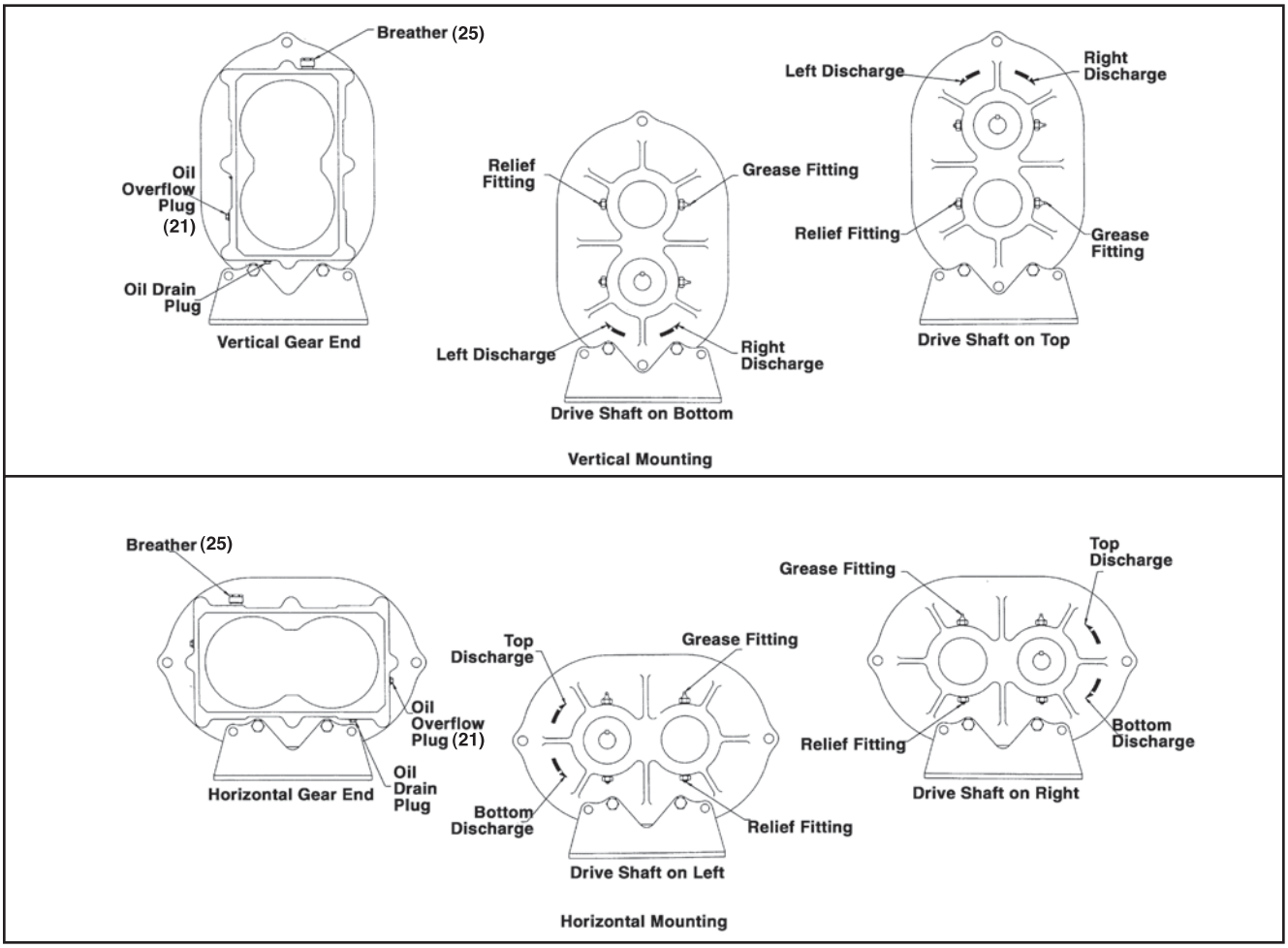

Drive End Breather Orientation for U-RAI series - DSL with Oil Lube

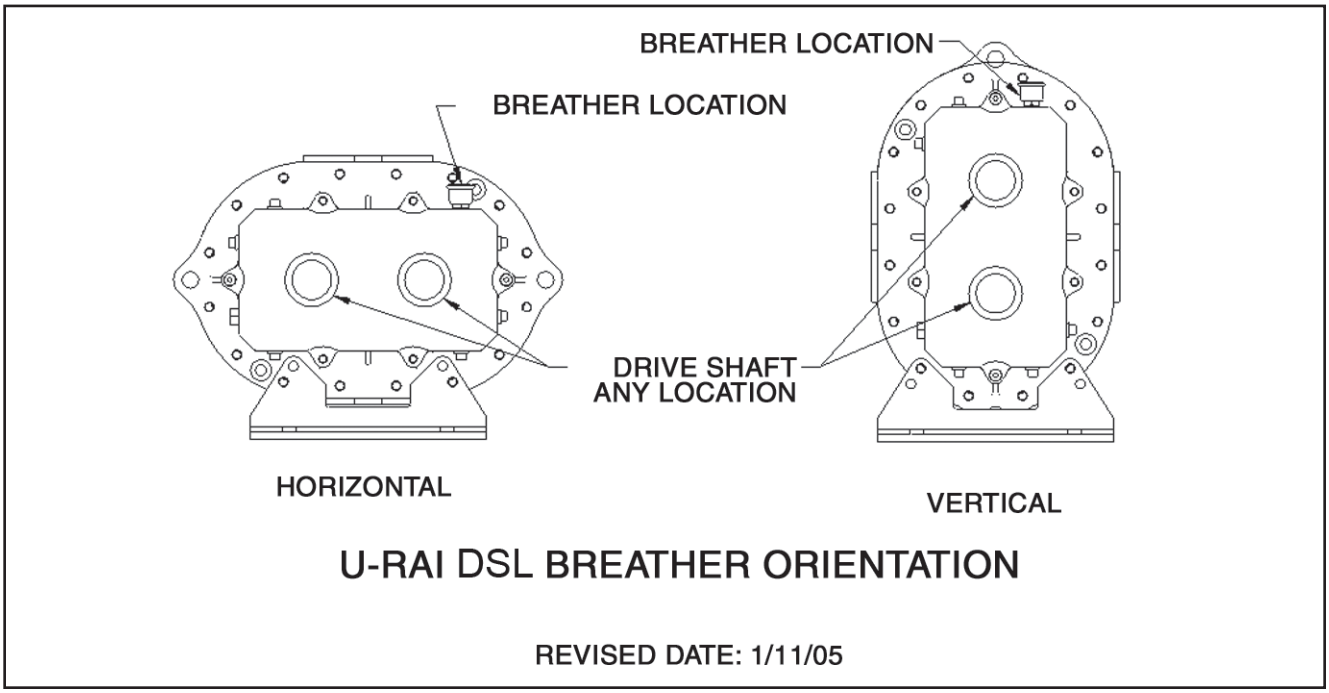

Table 1 - Universal RAI series, Universal URAI-DSL & URAI-G gas blower, Maximum Allowable Operating Conditions

Frame Size	Gear Diameter (inch)	Speed RPM	Temperature Rise		Delta Pressure		Inlet Vacuum	
			F°	C°	PSI	mbar	INHG	mbar
22	2.5	5275	225	125	12	827	15	500
24	2.5	5275	210	117	7	483	15	500
32	3.5	3600	240	133	15	1034	16	539
33	3.5	3,600	225	125	12	827	15	500
36	3.5	3,600	225	125	7	483	15	500
42	4.0	3,600	240	133	15	1034	16	539
45	4.0	3600	225	125	10	690	16	539
47	4.0	3600	225	125	7	483	15	500
53	5.0	2850	225	125	15	1034	16	539
56	5.0	2850	225	125	13	896	16	539
59	5.0	2850	225	125	7	483	15	500
65	6.0	2350	250	130	15	1034	16	539
68	6.0	2350	240	133	14	965	16	539
615	6.0	2350	130	72	7	483	14	472
76	7.0	2050	250	139	15	1034	16	539
711	7.0	2050	225	125	10	690	16	539
718	7.0	2050	130	72	6	414	12	405

Table 2 - Recommended Oil Grades

Ambient* Temperature °F (°C)	ISO Viscosity No.
Above 90° (32°)	320
32° to 90° (0° to 32°)	220
0° to 32° (-18° to 0°)	150
Below 0° (-18°)	100

*Ambient temperature is defined as the temperature of the space in which the blower and drive are located.

URAI GAS Blower Oil and Grease Specifications

The specified oil should be ROOTS® Synthetic Oil P/N 813-106-xxx of the proper viscosity.

Table 3 - Approximate Oil Sump Capacities

These capacities are provided to assist in stocking the correct amount of oil. Exact sump capacities may differ slightly. See "Lubrication" section for proper filling instructions.

UNIVERSAL RAI®, URAI-J, URAI-G

Model No./Drive shaft location	Gear End Approx. Oil Sump Capacities	
	Fl. Oz	Liters
22, 24 (left or right)	6.1	0.18
22, 24 (top or bottom)	3.4	0.1
32, 33, 36 (left or right)	10.5	0.31
32, 33, 36 (top or bottom)	8.5	0.25
42, 45, 47 (left or right)	14.5	0.43
42, 45, 47 (top or bottom)	12.7	0.37
53, 56, 59 (left or right)	27.6	0.82
53, 56, 59 (top or bottom)	16	0.47
65, 68, 615 (left or right)	52.1	1.54
65, 68, 615 (top or bottom)	28.3	0.84
76, 711, 718 (left or right)	59.5	1.76
76, 711, 718 (top or bottom)	32.3	0.96

See page 14 and 15 for illustration of vertical and horizontal configurations.

UNIVERSAL URAI series-DSL Splash Lubricated Drive End

Note that the gear end sump capacity is provided on the adjacent table.

Model No./Drive shaft location	Drive End Capacity	
	Fl. Oz	Liters
32, 33, 36 (left or right)	6.5	0.19
32, 33, 36(top or bottom)	4	0.12
42, 45, 47 (left or right)	10.8	0.32
42, 45, 47 (top or bottom)	5.5	0.16
53, 56, 59 (left or right)	14.8	0.44
53, 56, 59(top or bottom)	7.5	0.22
65, 68, 615 (left or right)	31	0.91
65, 68, 615 (top or bottom)	16	0.47

Table 4 - Universal URAI series with Grease Lubricated Drive End: Specified Bearing Greasing Intervals

Speed in RPM	Operating Hours Per Day		
	8	16	24
	Greasing Interval in Weeks		
750-1000	7	4	2
1000-1500	5	2	1
1500-2000	4	2	1
2000-2500	3	1	1
2500-3000	2	1	1
3000 and up	1	1	1

The specified grease for servicing drive end bearings of a gas blower, use a NLGI #2 premium grade aluminum complex* grease, Roots P/N T20019001 with 300°F (149°C) service temperature and moisture resistance and good mechanical stability.

When servicing drive end bearings of non gas blower, use a NLGI #2 premium grade microgel grease with 250°F (121°C) service temperature and moisture resistance and good mechanical stability. Roots specifies Shell Darina SD2 NLGI#2. Product Code 5067628.

NOTE: Lithium based greases are not compatible with the ROOTS® Synthetic Grease used when assembling a gas blower or the non-soap base grease used when assembling a standard URAI blower. Lithium based grease is not approved for any ROOTS™ blowers.

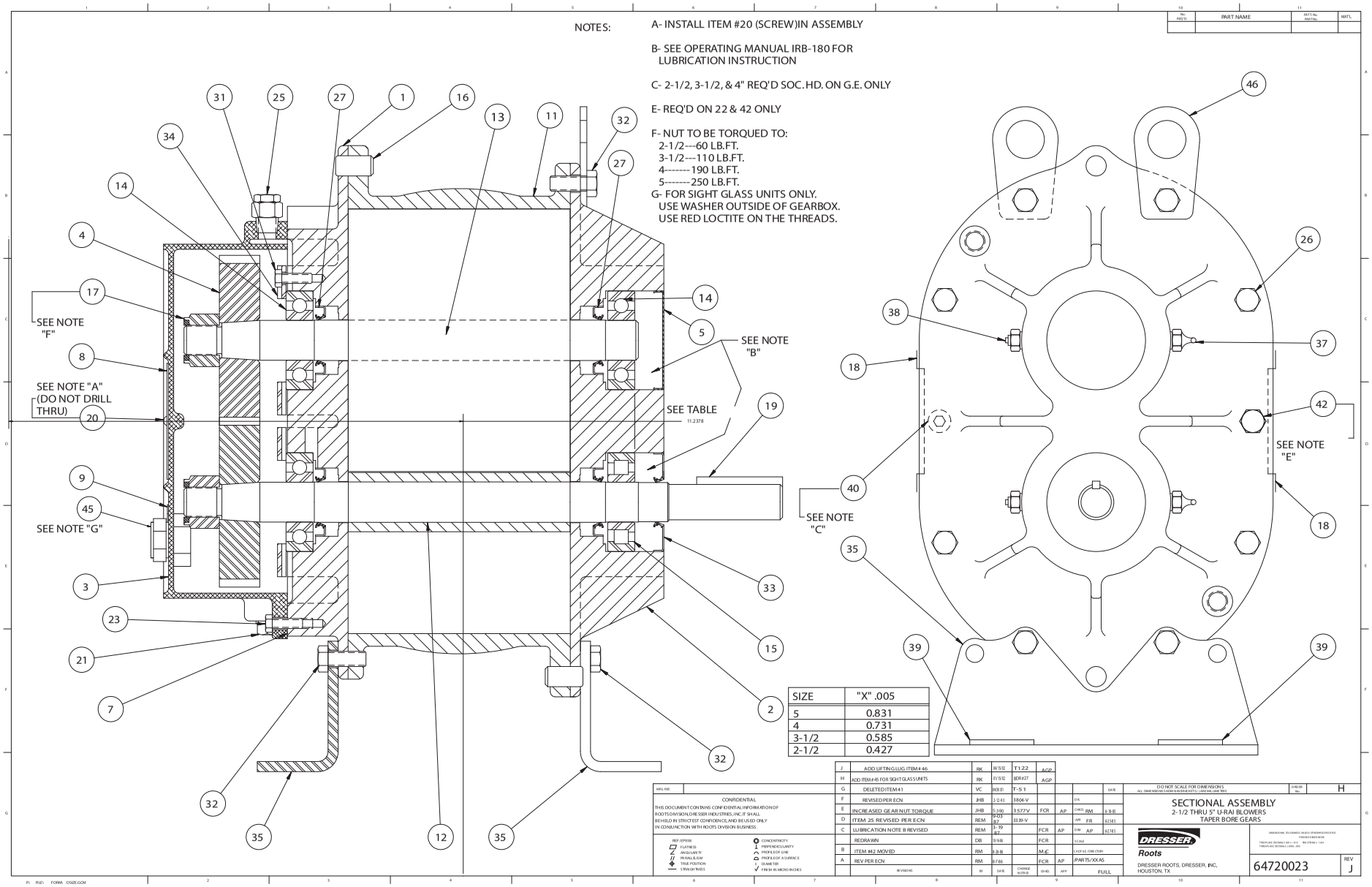

Assembly of UNIVERSAL RAI Series, Air Blowers, 2-1/2" Through 5" Gear Diameter

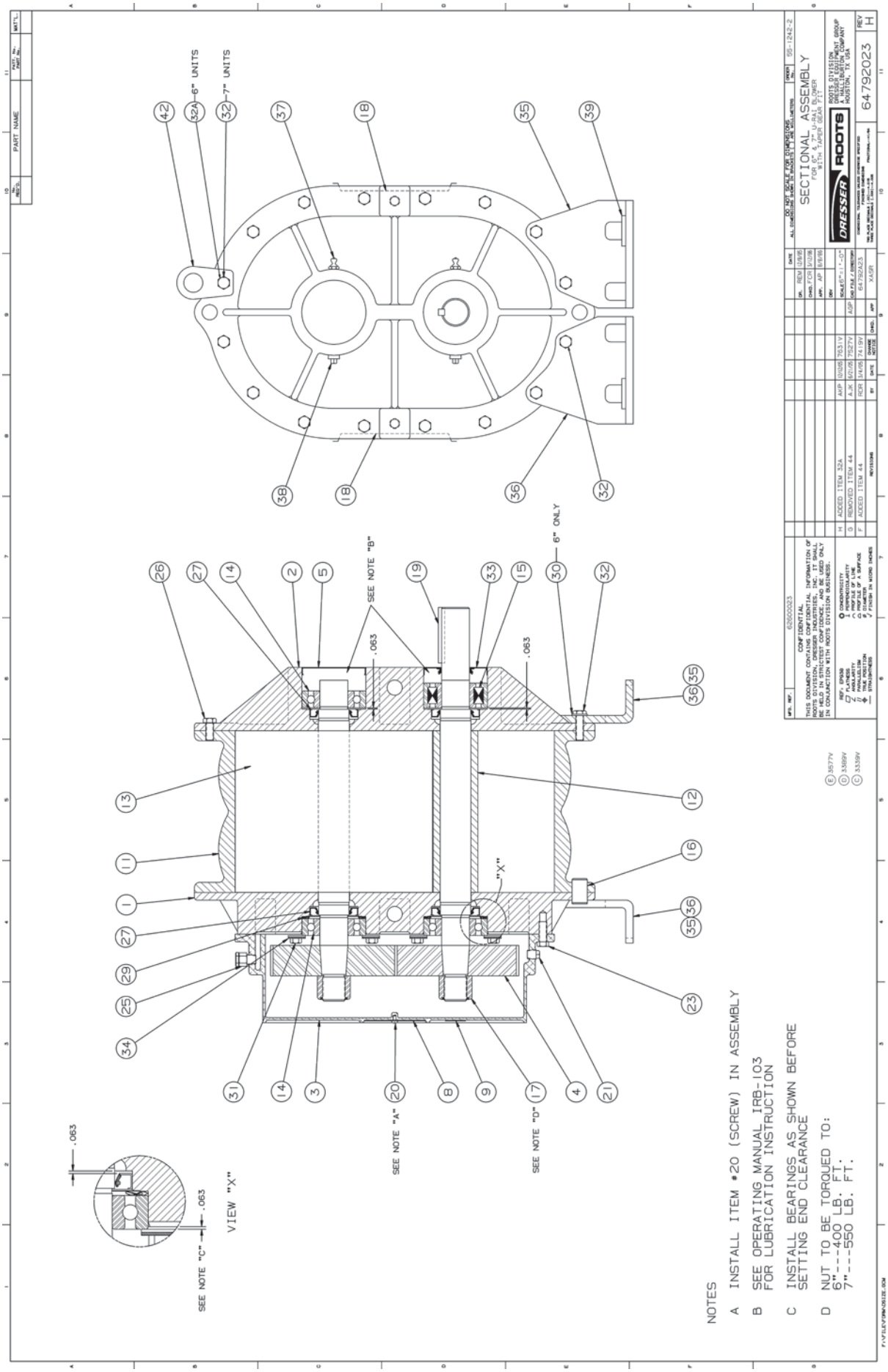

Assembly of UNIVERSAL RAI Blowers, 6" and 7" Diameter

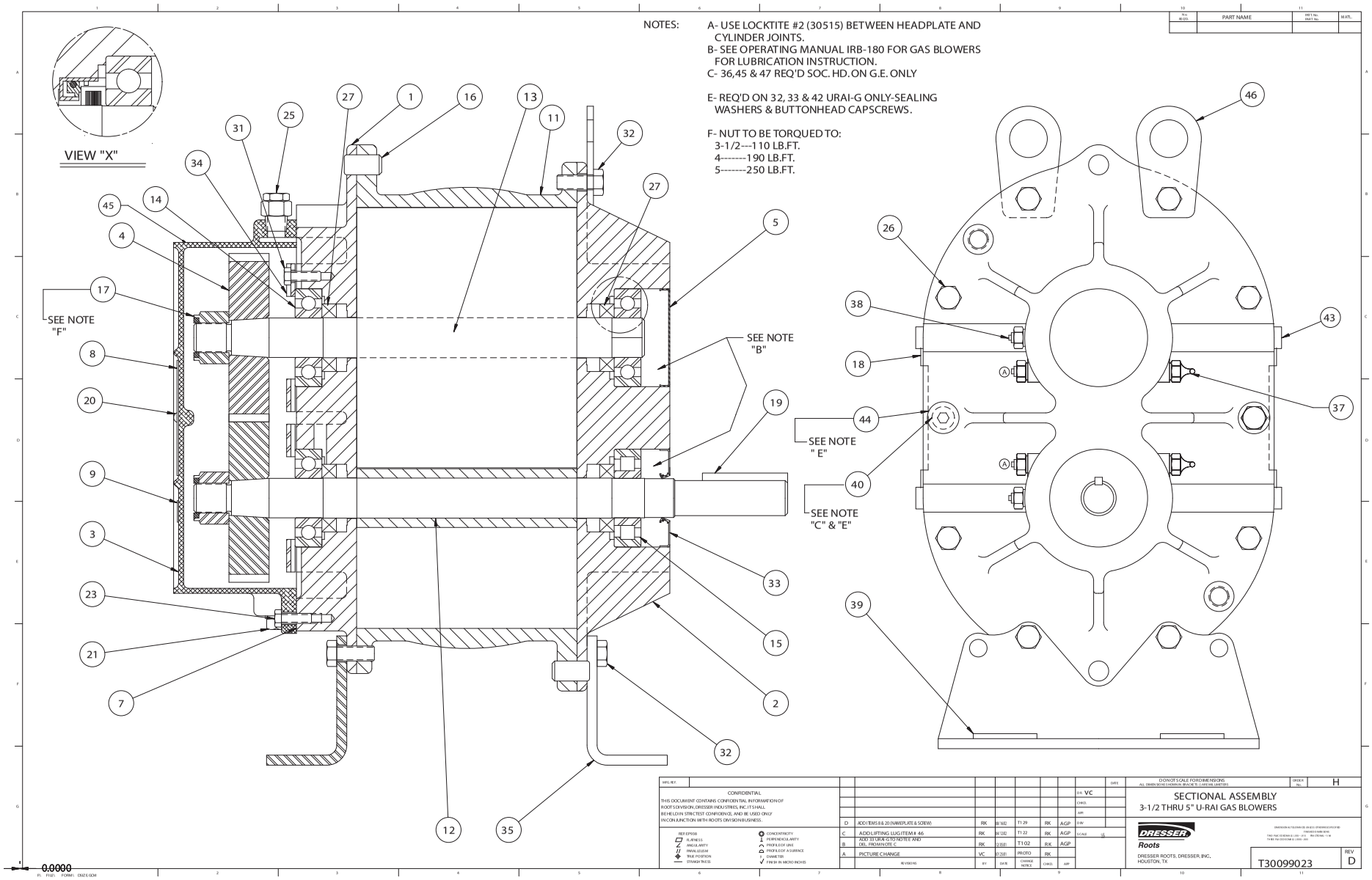

Assembly of UNIVERSAL RAI-G Series Gas Blowers, 3-1/2" through 5" Gear Diameter

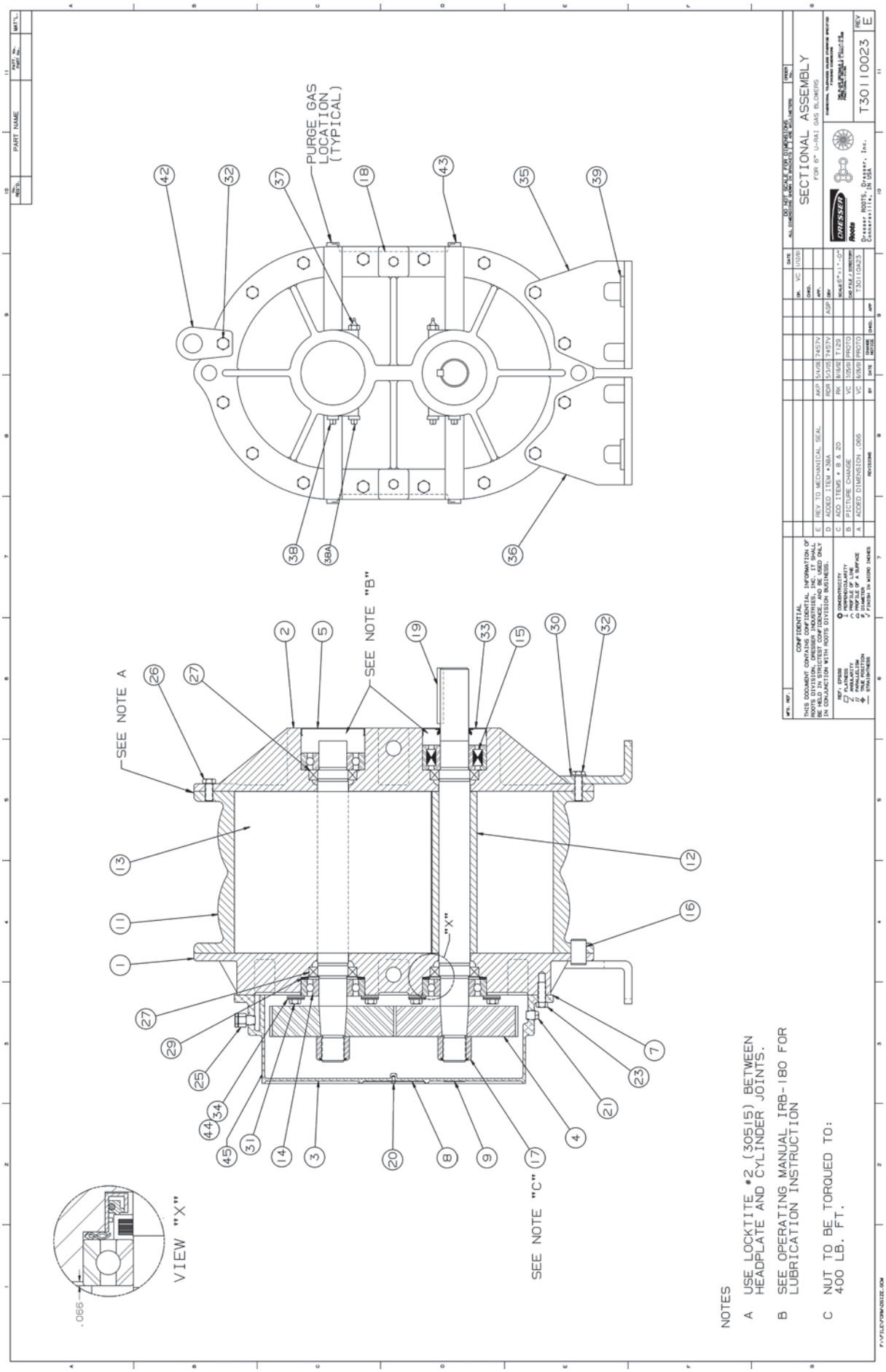

Assembly of UNIVERSAL RAI Series Gas Blowers, 6" Gear Diameter

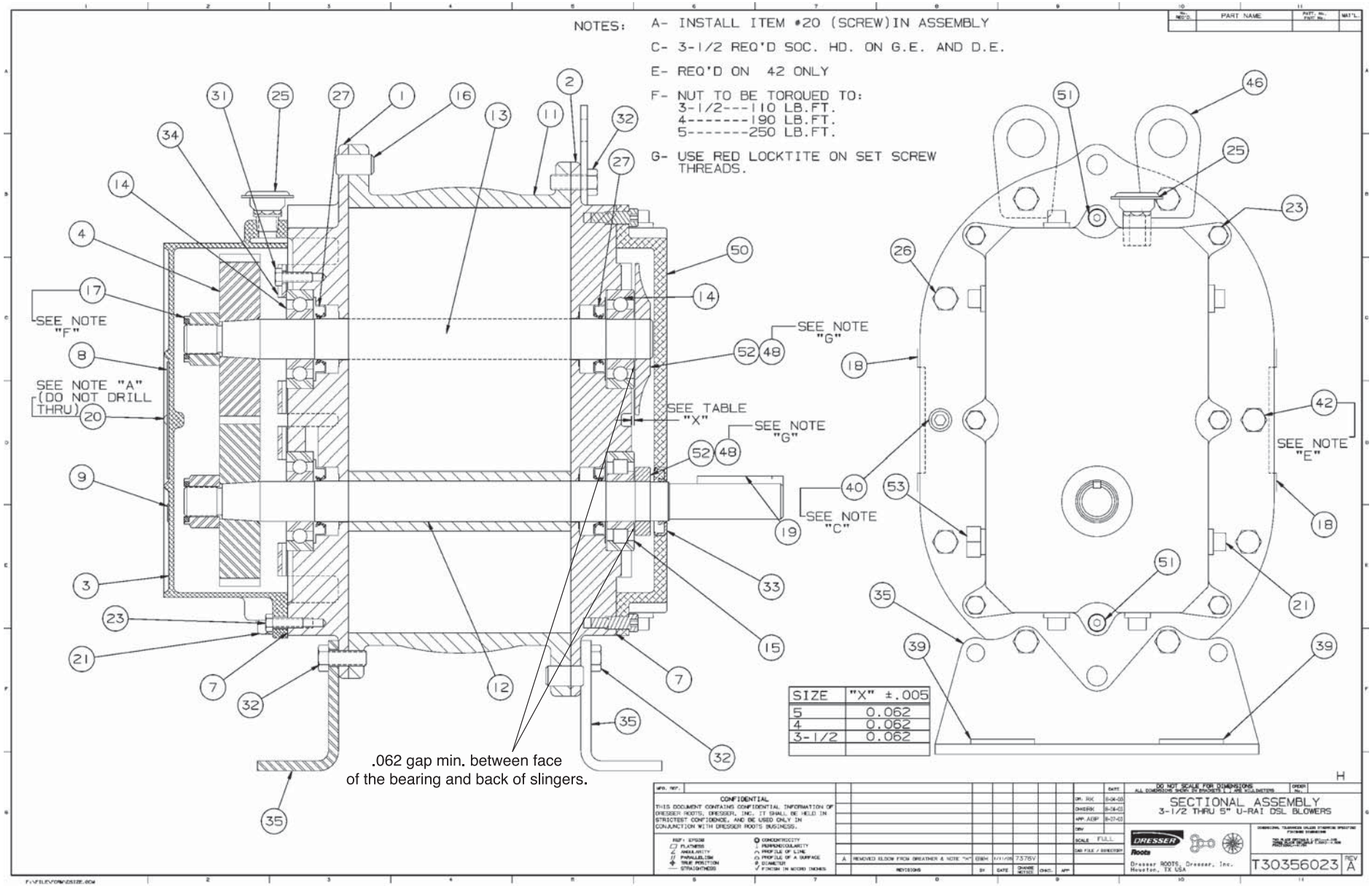

Assembly of UNIVERSAL RAI Series - DSL with Splash Lubricated Drive End 3-5" Gear Diameter

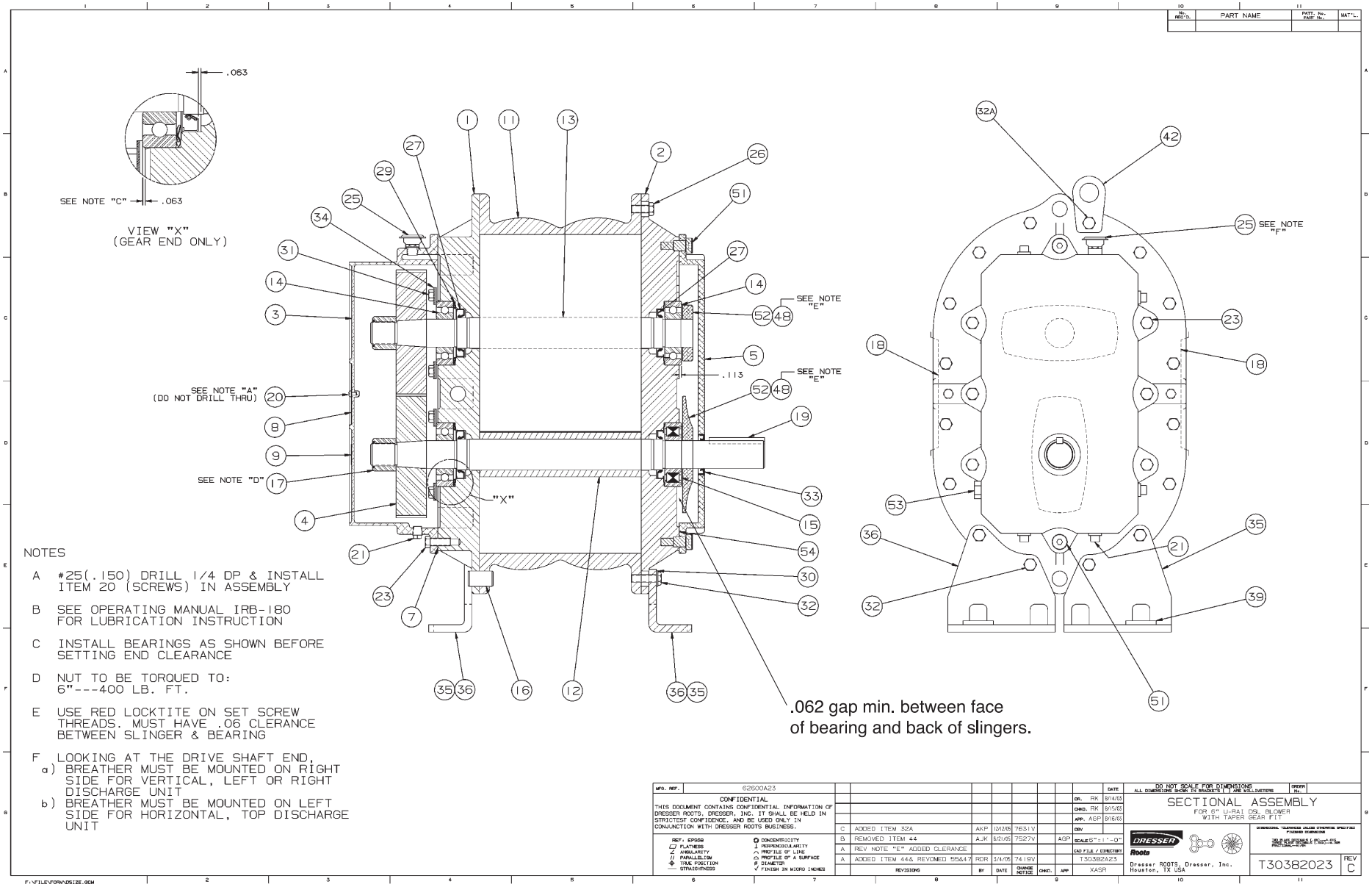

Assembly of UNIVERSAL RAI Series - DSL with Splash Lubricated Drive End 6" Gear Diameter

Universal RAI Series Blowers Parts List 2-1/2" – 5" Gear Diameter

(Refer to drawing #64720023)

Item #	Part Name	Qty.
1	Headplate Gear End	1
2	Headplate Drive End	1
3	Gearbox	1
4	Timing Gears	2
5	Cover-Blind (Plug Opening)	1
7	Gasket, Gear Box	1
11	Cylinder	1
12	Impeller & Shaft Drive	1
13	Impeller & Shaft Driven	1
14	Bearing, Ball	3
15	Bearing, Roller	1
16	Pin, Dowel	4
17	Gear Nut	2
19	Key	1
21	Plug, Pipe	3
23	Screw Hex	6
25	Breather (Plug Vent)	1
26	Screw, Hex	*
27	Seal, Lip Bearing	4
31	Screw, Hex, Nylock	4
32	Screw, Hex	6
33	Seal Lip-Drive	1
34	Clamp Plate	2
35	Foot	2
37	Fitting, Grease	2
38	Fitting, Relief	2
39	Washer Mounting	4
40	Screw Socket	2
42	Screw Hex	2

*Quantities vary by blower.

Universal RAI Series Blowers Parts List 6" & 7" Gear Diameter

(Refer to drawing #64792023)

Item #	Part Name	Qty.
1	Headplate Gear End	1
2	Headplate Drive End	1
3	Gearbox	1
4	Timing Gears	2
5	Cover-Blind (Plug Opening)	1
7	Gasket, Gear Box	1
11	Cylinder	1
12	Impeller & Shaft Drive	1
13	Impeller & Shaft Driven	1
14	Bearing, Ball	3
15	Bearing, Roller	1
16	Pin, Dowel	4
17	Gear Nut	2
19	Key	1
21	Plug, Pipe	3
23	Screw Hex Nylock	8
25	Breather (Plug Vent)	1
26	Screw, Hex	*
27	Seal, Lip Bearing	4
29	Washer, Spring Wavy	2
31	Screw, Hex, Nylock	4
32	Screw, Hex	10
33	Seal Lip-Drive	1
34	Clamp Plate	2
35	Foot	2
37	Fitting, Grease	2
38	Fitting, Relief	2
39	Washer Mounting	4

*Quantities vary by blower.

Universal RAI-DSL Series Blowers Parts List 3-1/2" – 5" Gear Diameter

(Refer to drawing #T30356023)

Item #	Part Name	Qty.
1	Headplate Gear End	1
2	Headplate Drive End	1
3	Gearbox	1
4	Timing Gears	2
7	Gasket, Gear Box, DE Cover	1
11	Cylinder	1
12	Impeller & Shaft Drive	1
13	Impeller & Shaft Driven	1
14	Bearing, Ball	3
15	Bearing, Roller	1
16	Pin, Dowel	4
17	Gear Nut	2
19	Key	1
21	Plug, Pipe	3
23	Screw Hex	6
25	Breather (Plug Vent)	1
26	Screw, Hex	*
27	Seal, Lip Bearing	4
31	Screw, Hex, Nylock	4
32	Screw, Hex	6
33	Seal Lip-Drive	1
34	Clamp Plate	2
35	Foot	2
39	Washer Mounting	4
40	Screw Socket	2
42	Screw Hex	2
48	DE Oil Slinger Set Screw	4
50	Drive End Cover	1
52	Drive End Oil Slinger	2
53	Oil Sight Glass	2

*Quantities vary by blower.

Universal RAI®-DSL Series Blowers Parts List 6" Gear Diameter

(Refer to drawing #T30382023)

Item #	Part Name	Qty.
1	Headplate Gear End	1
2	Headplate Drive End	1
3	Gearbox	1
4	Timing Gears	2
7	Gasket, Gear Box	1
11	Cylinder	1
12	Impeller & Shaft Drive	1
13	Impeller & Shaft Driven	1
14	Bearing, Ball	3
15	Bearing, Roller	1
16	Pin, Dowel	4
17	Gear Nut	2
19	Key	1
21	Plug, Pipe	3

Item #	Part Name	Qty.
23	Screw Hex Nylock	8
25	Breather (Plug Vent)	1
26	Screw, Hex	*
27	Seal, Lip Bearing	4
31	Screw, Hex, Nylock	4
32	Screw, Hex	10
33	Seal Lip-Drive	1
34	Clamp Plate	2
35	Foot	2
39	Washer Mounting	4
48	DE Oil Slinger Set Screw	4
50	Drive End Cover	1
52	Drive End Oil Slinger	2
53	Oil Sight Glass	2

*Quantities vary by blower.

Universal RAI Series Gas Blowers Parts List
3-1/2" & 5" Gear Diameter

(Refer to drawing #T30099023)

Item Number	Part Name	Quantity
1	Headplate Gear End	1
2	Headplate Drive End	1
3	Gearbox	1
4	Timing Gears	2
5	Cover-Blind (Plug Opening)	1
7	Gasket, Gear Box	1
11	Cylinder	1
12	Impeller & Shaft Drive	1
13	Impeller & Shaft Driven	1
14	Bearing, Ball	3
15	Bearing, Roller	1
16	Pin, Dowel	4
17	Gear Nut	2
19	Key	1
21	Plug, Pipe	3
23	Screw Hex	8
25	Breather (Plug Vent)	1
26	Screw, Hex	14*
27	Seal, Bearing	4
31	Screw, Hex	4
32	Screw, Hex	4
33	Seal Lip-Drive	1
34	Clamp Plate	2
35	Foot	2
37	Fitting, Grease	2
38	Fitting, Relief	2
39	Washer Mounting	4
40	Screw Socket	2
42	Screw Hex	2

*Quantity varies by blower.

Specified Lubricants

ROOTS® Synthetic Oil: ISO-VG-220 Grade	
	Part Number
Quart	813-106-001
Gallon	813-106-002
Case (12 qts)	813-106-008
ROOTS® Synthetic Oil: ISO-VG-320 Grade	
	Part Number
Quart	813-106-004
Gallon	813-106-005
Case (12 qts)	813-106-007
ROOTS® Synthetic Grease: NLGI #2	
	Part Number
14.5 oz. Tube	T200019-001
5 Gallon Pail	T200019-003
Case (30 tubes)	T200019-002

Universal RAI Series Gas Blowers Parts List
6" Gear Diameter

(Refer to drawing #T3011023)

Item Number	Part Name	Quantity
1	Headplate Gear End	1
2	Headplate Drive End	1
3	Gearbox	1
4	Timing Gears	2
5	Cover-Blind (Plug Opening)	1
7	Gasket, Gear Box	1
7*	Gasket DE Cover	1
11	Cylinder	1
12	Impeller & Shaft Drive	1
13	Impeller & Shaft Driven	1
14	Bearing, Ball	3
15	Bearing, Roller	1
16	Pin, Dowel	4
17	Gear Nut	2
19	Key	1
21	Plug, Pipe	3
23	Screw Hex Nylock	8
25	Breather (Plug Vent)	1
26	Screw, Hex	14**
27	Seal, Bearing	4
31	Screw, Hex	4
32	Screw, Hex	10
33	Seal Lip-Drive	1
34	Clamp Plate	2
35	Foot	2
37	Fitting, Grease	2
38	Fitting, Relief	2
39	Washer Mounting	4
40	Screw Socket	2
42	Screw Hex	2
43	Plug	8
51	Shoulder Bolt	2
53	Oil Sight Glass	2

*DE cover gasket is not the same as the gasket used on the GE. You must specify the gasket required when ordering.

**Quantities vary by blower.

Basic Connection & Drive Shaft Information
UNIVERSAL RAI (URAI) Air Blowers with Grease Lubricated Drive End

BOM#*	Frame Size	Inlet/Disch Connection	Shaft Diameter (in.)	Bare Weight
65102020	22	1" NPT	0.625	32
65103020	24	2" NPT	0.625	43
71048020	32	1.25" NPT	0.750	69
65105020	33	2" NPT	0.750	74
65106020	36	2.5" NPT	0.750	102
65108020	42	1.5" NPT	0.875	88
65109020	45	2.5" NPT	0.875	109
65110020	47	3" NPT	0.875	128
65112020	53	2.5” NPT	1.125	143
65113020	56	4" NPT	1.125	170
65114020	59	4” NPT	1.125	204
65116020	65	3" NPT	1.375	245
65117020	68	5" NPT	1.375	285
65118020	615	6" Flange	1.375	425
65120020	76	4" NPT	1.562	400
65121020	711	6" Flange	1.562	530
65122020	718	8" Flange	1.562	650

Refer to Specification Sheet S-12K84

URAI DSL Air Blowers with Dual Splash Lubrication

BOM#*	Frame Size	Inlet/Disch Connection	Shaft Diameter (in.)	Bare Weight
T30378020	32	1.25" NPT	0.750	72
T30379020	33	2" NPT	0.750	77
T30380020	36	2.5" NPT	0.750	105
T30352020	42	1.5" NPT	0.875	92
T30353020	45	2.5" NPT	0.875	113
T30354020	47	3" NPT	0.875	132
T30359020	53	2.5" NPT	1.125	148
T30360020	56	4" NPT	1.125	175
T30361020	59	4” NPT	1.125	209
T30384020	65	3" NPT	1.375	250
T30385020	68	5” NPT	1.375	290
T30386020	615	6" Flange	1.375	430

Refer to Specification Sheet S-27S03

Universal RAI air blowers include detachable mounting feet which permit vertical or horizontal installation. The units are center timed for rotation in either direction. The bearings on the URAI are grease lubricated on the drive end and splash lubricated on the gear end. The URAI-DSL is splash lubricated on BOTH ends.

Universal RAI-G Gas Blowers with Grease Lubricated Drive End

BOM#*	Frame Size	Inlet/Disch Connection	Shaft Diameter (in.)	Bare Weight
710480G0	32	1.25" NPT	0.750	69
651050G0	33	2" NPT	0.750	74
651060G0	36	2.5" NPT	0.750	102
651080G0	42	1.5" NPT	0.875	88
651090G0	45	2.5" NPT	0.875	109
651100G0	47	3" NPT	0.875	128
651120G0	53	2.5" NPT	1.125	143
651130G0	56	4" NPT	1.125	170
651140G0	59	4” NPT	1.125	204
651160G0	65	3" NPT	1.375	245
651170G0	68	5” NPT	1.375	285
651180G0	615	6" NPT	1.375	425

Refer to Specification Sheet S-60A01

Universal RAI-G™ gas blowers include detachable mounting feet which permit vertical or horizontal installation. **Feet are different for vertical and horizontal mounting.** The units are center timed for rotation in either direction. The bearings on the Universal RAI-G are grease lubricated on the drive end and splash lubricated on the gear end. ROOTS® Synthetic Lubricant is recommended.

Basic Connections and Drive Shaft Information

Universal RAI (URAI-J) WHISPAIR™ Air Blowers

Universal RAI-J WHISPAIR™ Air Blowers with Grease Lubricated Drive End

BOM#*	Frame Size	Inlet/Disch Connection	Shaft Diameter (in.)	Bare Weight
74065020	33J	2" NPT	0.750	84
74086020	36J	2.5" NPT	0.750	112
74066020	45J	2.5" NPT	0.875	119
74087020	47J	3" NPT	0.875	138
74067020	56J	4" NPT	1.125	180

Refer to Specification Sheet S-33A93

URAI-J-DSL WHISPAIR™ Air Blowers with Dual Splash Lubrication

BOM#*	Frame Size	Inlet/Disch Connection	Shaft Diameter (in.)	Bare Weight
T30417020	33J	2" NPT	0.750	87
T30418020	36J	2.5" NPT	0.750	115
T30410020	45J	2.5" NPT	0.875	122
T30412020	47J	3" NPT	0.875	141
T30415020	56J	4" NPT	1.125	185

Refer to Specification Sheet S-33A93

URAI-J Metric WHISPAIR™ Air Blowers with Grease Lubricated Drive End

BOM#*	Frame Size	Inlet/Disch Connection	Shaft Diameter (mm)	Bare Weight
TBD	33J	2" BSP	19	84
740860M0	36J	2.5" BSP	19	112
TBD	45J	2.5" BSP	24	119
TBD	47J	3" BSP	24	138
TBD	56J	4" BSP	28	180

URAI-J-DSL Metric WHISPAIR™ Air Blowers with Dual Splash Lubrication

BOM#*	Frame Size	Inlet/Disch Connection	Shaft Diameter (mm)	Bare Weight
TBD	33J	2" BSP	19	87
T304660M0	36J	2.5" BSP	19	115
TBD	45J	2.5" BSP	24	122
T304550M0	47J	3" BSP	24	141
TBD	56J	4" BSP	28	185

Universal RAI-J air blowers incorporate the patented WHISPAIR™ design in addition to the same features as the original URAI blowers. The URAI-J's are centered timed, however the WHISPAIR™ benefits can only be realized when the jet is located in the discharge position.

Universal RAI Metric (URAI-M) Air Blowers with Grease Lubricated Drive End

NOTE: Metric URAI product has metric shaft diameter and connection sizes.

BOM#*	Frame Size	Inlet/Disch Connection	Shaft Diameter (mm)	Bare Weight
651020M0	22	1" BSP	16	32
651030M0	24	2" BSP	16	43
710480M0	32	1.25" BSP	19	69
651050M0	33	2" BSP	19	74
651060M0	36	2.5" BSP	19	102
651080M0	42	1.5" BSP	24	88
651090M0	45	2.5" BSP	24	109
651100M0	47	3" BSP	24	128
651120M0	53	2.5” BSP	28	143
651130M0	56	4" BSP	28	170
651140M0	59	4” BSP	28	204
T30392060	65	3" BSP	32	245
T30394060	68	5" BSP	32	285
T30390060	615	150 NP10	32	425
T30396060	76	4" BSP	38	400
T30398060	711	150 NP10	38	530
T30340060	718	200 NP10	38	650

URAI-DSL Metric Air Blowers with Dual Splash Lubrication

BOM#*	Frame Size	Inlet/Disch Connection	Shaft Diameter (mm)	Bare Weight
T30463060	32	1.25" BSP	19	72
T30464060	33	2" BSP	19	77
T30465060	36	2.5" BSP	19	105
T30451060	42	1.5" BSP	24	92
T30452060	45	2.5" BSP	24	113
T30453060	47	3" BSP	24	132
T30459060	53	2.5" BSP	28	148
T30460060	56	4" BSP	28	175
T30461060	59	4” BSP	28	209
T30467260	65	3" BSP	32	250
T30467360	68	5” BSP	32	290
T30467460	615	150 NP 10	32	430

Universal RAI air blowers include detachable mounting feet which permit vertical or horizontal installation. The units are center timed for rotation in either direction. The bearings on the URAI are grease lubricated on the drive end and splash lubricated on the gear end. The URAI-DSL is splash lubricated on BOTH ends.

ROOTS™ Blowers and Compressors Synthetic Lubricating Oil

After extensive life testing on rotary lobe blowers, Dresser ROOTS™ introduced a special blend, high-temperature, (polyalphaolefin based) synthetic lubricating oil for ROOTS™ blowers in 1990.

Today's ROOTS™ blowers and exhausters are designed and built with the same attention to detail that has firmly established the Dresser Roots reputation for reliability, quality and technical excellence over the past 150 years.

ROOTS™ synthetic lubricating oils are made with the same quality and technical excellence standards to meet the highest specifications required for maximum performance.

LUBRICANT ADVANTAGES:

- **High Oxidation Stability** - Contains oxidation-resistant additives that mean longer oil life and fewer oil changes. ROOTS™ Synthetic Lubricating oil excels in ASTM oxidation tests, and in the field, where it counts. Longer oil life means lower expenditures, and greater conservation.
- **Rapid Separation from Water** - Promotes prolonged bearing life.
- **Excellent Corrosion Protection** - Contains synthetic corrosion inhibitors. Protects during operation and acts as a preservative during shut down.
- **Synthetic Solvency** - Keeps equipment clean.
- **Ashless** - Keeps equipment free from metallic ash deposits.
- **Compatible with Seals** - Has excellent compatibility with seals.
- **Blower Protection** - Protects blower through a wide range of operating temperatures.
- **Pour Point** - from -40°F (-40°C). **Flash Point** - at 500°F (260°C).
- **Range of Use** - ROOTS™ Synthetic Lubricating Oil can be used in any blower application or operating environment.
- **High Film Strength** - ROOTS™ Synthetic Lubricating Oil carries up to 700% greater loads than other mineral and synthetic oils.
- **Low Friction** - Extremely low coefficient of friction proven to save energy over conventional oils.
- **Compatibility With Other Oils** - ROOTS™ Synthetic Lubricating Oil is compatible with, and can be mixed with, other mineral oils and most other synthetic oils. No special cleaning is required at change out for blowers previously running on mineral oil. NOTE: It is NOT compatible with silicone or glycol synthetics.
- **ISO Grade Availability** - Available in ISO Grade 100, 150, 220, or 320.
- **Container Sizes** - Available in one-quart containers, 12-quart cases, one-gallon containers, 5-gallon pails, or 55 gallon drums.

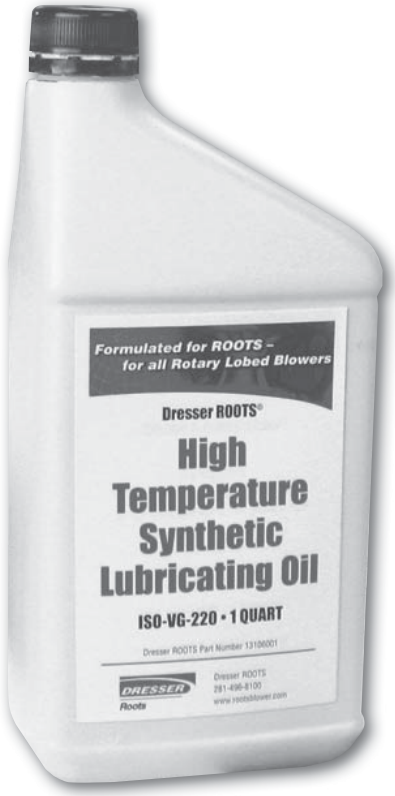

About Dresser Roots®

Dresser Roots, a major product brand of Dresser, Inc., is the manufacturer of the original ROOTS blower™, centrifugal compressors and control systems. ROOTS® air and gas moving equipment is used in a wide variety of applications, including Mechanical Vapor Recompression, water and wastewater treatment, flue gas desulphurization, petrochemical and chemical processes, conveying, and other industrial applications.

About Dresser, Inc.

Dresser, Inc. is a leader in providing highly engineered infrastructure products for the global energy industry. The company has leading positions in a broad portfolio of products, including valves, actuators, meters, switches, regulators, piping products, natural gas-fueled engines, retail fuel dispensers and associated retail point-of-sale systems, and air and gas handling equipment. Leading brand names within the Dresser portfolio include Dresser Wayne® retail fueling systems, Waukesha® natural gas-fired engines, Masoneilan® control valves, Consolidated® pressure relief valves, and Roots® blowers. It has manufacturing and customer service facilities located strategically worldwide and a sales presence in more than 100 countries.

Dresser Roots
Houston, Texas Headquarters • U.S. Toll Free Phone: 1 877-363-ROOT(S) (7668) • Direct Phone: +1 832-590-2600
Connersville, Indiana Operations • U.S. Toll Free Phone: 1 877-442-7910 • Direct Phone: +1 765-827-9285
European Operations • Phone: +44 (0) 1695 52600 • Email: roots.europe@dresser.com
USA/Canada Sales • Phone: +1 773-444-3360
Houston, Texas Factory Service • Phone: +1 713-896-4810
Mexico City Sales and Factory Service • Phone: +52 55 5889 5811
Dubai Sales and Factory Service • Phone: +971 4-8855481
Malaysia Sales • Phone: +60 3 2267 2600
China Sales • Phone: +86 10 8486 2440
Shanghai Factory Service • Phone: +86 21 5858 7638

©2010 Dresser, Inc. All rights reserved. • Printed in the U.S.A. • All information subject to change without notice. • Roots, Wayne, Waukesha, Masoneilan and Consolidated are registered trademarks of Dresser, Inc. • ROOTS, WHISPAIR, UNIVERSAL RAI, UNIVERSAL RAI-J and UNIVERSAL RAI-G are trademarks of Dresser, Inc.

DRESSER Roots

ISRB-2002 rev. 0710

www.dresserroots.com/

CERTIFICATION DATA SHEET

Model#:	324TTFC6027 AA	**WINDING#:**	T16104005 NONE 3
CONN. DIAGRAM:	4172.03	**ASSEMBLY:**	F1/F2 CAPABLE
OUTLINE:	169541.60ME		

TYPICAL MOTOR PERFORMANCE DATA

HP	KW	SYNC. RPM	F.L. RPM	FRAME	ENCLOSURE	KVA CODE	DESIGN
40&30	30&22.4	1800	1780&1481	324T	TEFC	G	B

PH	Hz	VOLTS	FL AMPS	START TYPE	DUTY	INSL	S.F	AMB	ELEVATION
3	60/50	208-230/460#190/380	99-92/46&84/42	ACROSS THE LINE	CONTINUOUS	F2	1.15/1.15	40	3300

FULL LOAD EFF: 94.1&93.6	3/4 LOAD EFF: 95	1/2 LOAD EFF: 95	GTD. EFF	ELEC. TYPE	NO LOAD AMPS
FULL LOAD PF: 86&86.5	**3/4 LOAD PF: 82**	**1/2 LOAD PF: 74.5**	93	SQ CAGE IND RUN	35 / 17.5

F.L. TORQUE	LOCKED ROTOR AMPS	L.R. TORQUE	B.D. TORQUE	F.L. RISE
119 LB-FT	580 / 290	225 LB-FT 189	350 LB-FT 294	65

SOUND PRESSURE @ 3 FT.	SOUND POWER	ROTOR WK^2	MAX. WK^2	SAFE STALL TIME	STARTS /HOUR	APPROX. MOTOR WGT
- dBA	- dBA	6.32 LB-FT^2	- LB-FT^2	20 SEC.	-	538 LBS.

*** SUPPLEMENTAL INFORMATION ***

DE BRACKET TYPE	ODE BRACKET TYPE	MOUNT TYPE	ORIENTATION	SEVERE DUTY	HAZARDOUS LOCATION	DRIP COVER	SCREENS	PAINT
STANDARD	STANDARD	RIGID	HORIZONTAL	FALSE	NONE	FALSE	NONE	STANDARD

BEARINGS		GREASE	SHAFT TYPE	SPECIAL DE	SPECIAL ODE	SHAFT MATERIAL	FRAME MATERIAL
DE	OPE						
BALL	BALL	STANDARD	T	NONE	NONE	STANDARD	CAST IRON
6312	6312						

THERMO-PROTECTORS				THERMISTORS	CONTROL	SPACE /n HEATERS
THERMOSTATS	PROTECTORS	WDG RTDs	BRG RTDs			
NONE	NOT	NONE	NONE	NONE	FALSE	NONE VOLTS

*
N
O
T
E
S
*

INVERTER TORQUE: NONE
INV. HP SPEED RANGE: NONE

ENCODER: NONE
NONE NONE
NONE NONE PPR

BRAKE: NONE NONE
NONE P/N NONE
NONE NONE
- FT-LB NONE V NONE Hz

DATE: 07/05/2011 12:17:57 PM
FORM 3531 REV.3 02/07/99
** Subject to change without notice.

169541–60ME

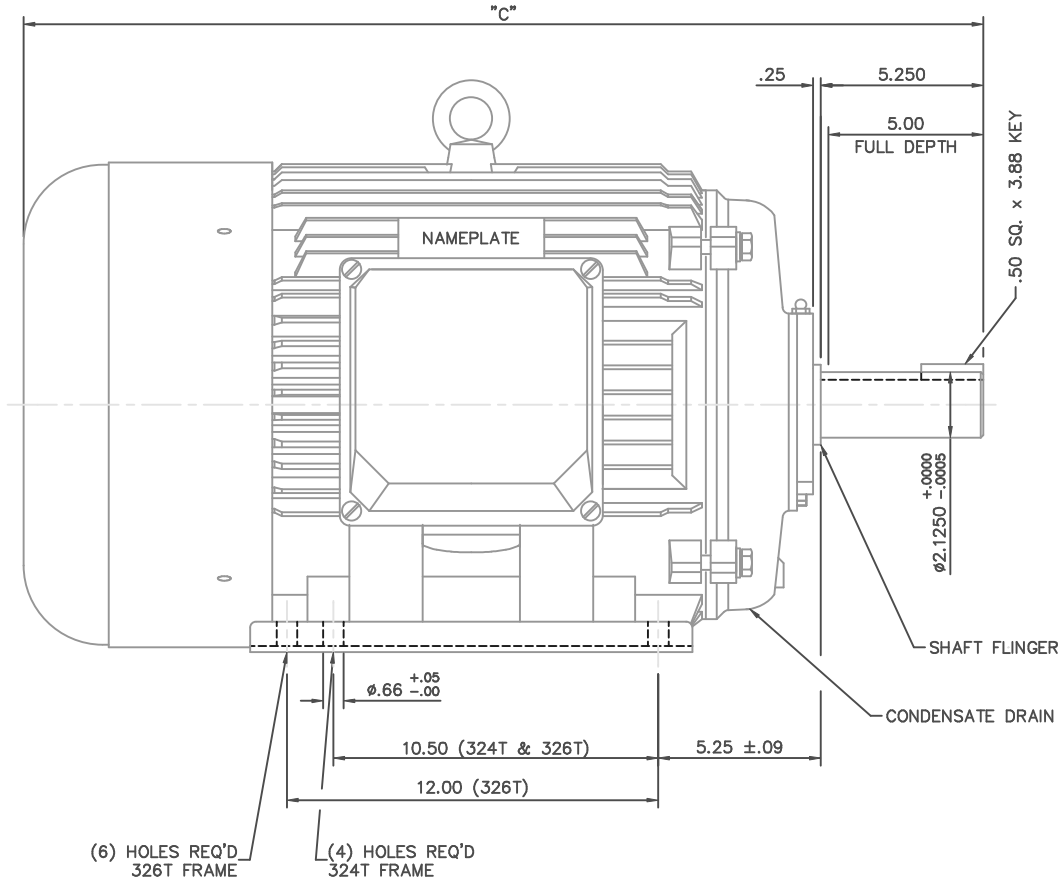

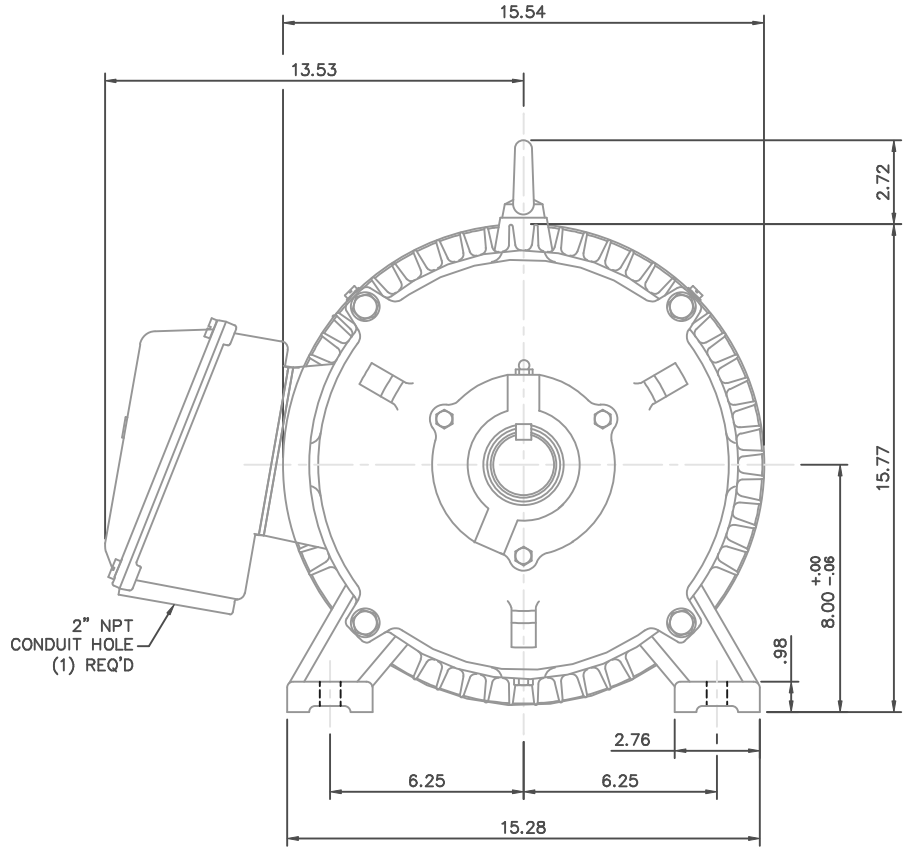

FRAME DESIGN	"C"
324T	29.53
326T	31.02

NO.	REVISION	BY & DATE	CHK
01	ADDED HOLE FOR 326T BASE	JJK 07/13/99	

TOLERANCES UNLESS SPECIFIED

DEC.	INCHES
.X	±.1
.XX	±.03
.XXX	±.005
.XXXX	±.0005
ANG	±1/2°

MARATHON ELECTRIC

TITLE: OUTLINE – 320T FRAME TEFC – RIGID

MAT'L.: CAST IRON

FINISH

CAD FILE: 16954160ME

RFP

DIST

DRAWN JJK 03/29/99

CHK

APPD PG 03/31/99

SCALE 1=4

REF 169504

FMF

PREV

SIZE B | DRAWING NO. 169541–60ME | REV. 01

THIS DRAWING IN DESIGN AND DETAIL IS OUR PROPERTY AND MUST NOT BE USED EXCEPT IN CONNECTION WITH OUR WORK ALL RIGHTS OF DESIGN AND INVENTION ARE RESERVED
THIS IS AN ELECTRONICALLY GENERATED DOCUMENT – DO NOT SCALE THIS PRINT

Installation, Operation and Maintenance Instructions

for AC Induction Motors
56- 6800 Frames (NEMA)
63 – 280 Frames (IEC)

MARATHON ELECTRIC
Contact Motor Customer Service at:
Phone: (715) 675-3311
www.marathonelectric.com

Form 5554E

INSTALLER: PLEASE LEAVE THIS MANUAL FOR THE OWNER'S USE
OWNER: READ AND SAVE THESE INSTRUCTIONS

SAFETY INSTRUCTIONS

⚠ This is the safety alert symbol. It is used to alert you to potential personal injury hazards. Obey all safety messages that follow this symbol to avoid possible injury or death.

⚠ WARNING
Before installing, using, or servicing this product, carefully read and fully understand the instructions including all warnings, cautions, & safety notice statements. To reduce risk of personal injury, death and/or property damage, follow all instructions for proper motor installation, operation and maintenance.

These instructions are not intended as a complete listing of all details for installation, operation, and maintenance. If you have any questions concerning any of the procedures, STOP, and call the appropriate Regal-Beloit motor company.

Table of Contents

1.0 INSTALLER / OWNER / OPERATOR RESPONSIBILITY
1.1 Electrical Safety
1.2 Mechanical Safety
1.3 Environmental Safety
2.0 RECEIVING & INSPECTION
2.1 Initial Inspection
2.1.1 Packing List & Inspect
2.1.2 Turn Motor Shaft
2.1.3 Check Nameplate
2.2 Handling
2.2.1 Correct Lifting Angles
2.3 Storage
2.3.1 Bearing Lubrication
2.3.2 Shaft Rotation
2.3.3 Damp or Humid Storage Locations
3.0 INSTALLATION AND OPERATION
3.1 Location
3.1.1 Selecting a Location
3.1.2 Ambient Temperature Limits
3.1.3 Construction Selection per Location
3.1.3.1 Dripproof
3.1.3.2 Totally Enclosed
3.1.3.3 Hazardous Locations Motors
3.2 Mounting Motor
3.2.1 Rigid Base (Footed)
3.2.2 Rigid Base Hole Selection -6 or 8 Hole Bases
3.2.3 Vertical
3.3 Application Assembly to Motor
3.3.1 General: Proper Alignment
3.3.2 Direct Coupling
3.3.3 Direct Connected
3.3.4 Belted
3.3.5 VFD Operation
3.3.6 Accessories
3.3.6.1 General
3.3.6.2 Brake Motors
3.3.6.3 Space Heaters
3.3.6.4 Thermal Protection General, Thermostats, Thermisters & RTDs
3.3.6.5 RTD Alarm & Trip Settings
3.3.7 Guards
3.4 Electrical Connections
3.4.1 Power Supply / Branch Circuit
3.4.1.1 Branch Circuit Supply
3.4.1.2 Fuses, Breakers, Overload Relays
3.4.1.3 AC Power Supply Limits
3.4.2 Terminal Box
3.4.2.1 Conduit opening
3.4.2.2 Hazardous Locations
3.4.3 Lead Connections
3.4.3.1 Wire Size Requirements (Single Phase)
3.4.3.2 Extension Cords (Single Phase)
3.4.4 Ground Connections
3.4.5 Start Up
3.4.5.1 Start Up – No Load Procedure
3.4.5.2 Start Up – Load Connected Procedure
3.4.5.3 Jogging and/or repeated starts
4.0 MAINTENANCE
4.1 General Inspection

4.1.1 Ventilation
4.1.2 Insulation
4.1.3 Electrical Connections
4.2 Lubrication and Bearings
4.2.1 Grease Type
4.2.2 Bearing Operating Temperature
4.2.3 Lubrication Interval
4.2.4 Lubrication Procedure
4.2.5 Lubrication Example
4.3 Trouble Shooting
4.3.1 General Trouble-Shooting Warnings
4.3.2 Trouble-Shooting Cause / Corrective Action

1.0 INSTALLER/OWNER/OPERATOR RESPONSIBILITY:

1.1 ELECTRICAL SAFETY

⚠ WARNING: ELECTRICAL SHOCK HAZARD
Electrical connections shall be made by a qualified electrical personnel in accordance with all applicable codes, ordinances and sound practices. Failure to follow these instructions could result in serious personal injury, death and/or property damage. Only qualified personnel who are familiar with the applicable National Code (USA = NEC) and local codes should install or repair electrical motors and their accessories.

⚠ WARNING: ELECTRICAL LIVE CIRCUIT HAZARD
Do not touch electrically live parts. Disconnect, lockout and tag input power supply before installing or servicing motor (includes accessory devices). Use a voltmeter to verify that power is off before contacting conductors.

⚠ WARNING: ELECTRICAL GROUNDING HAZARD
Failure to properly ground motors, per the National Electrical Code (NEC) Article 430 and local codes may cause serious injury or death to personnel. For general information on grounding refer to NEC Article 250. (Also see "Ground Connections section 3.4.4").

⚠ WARNING: AUTOMATIC RESET PROTECTOR HAZARD
Do not use automatic reset protectors if automatically restarting the motor will place personnel or equipment at risk. . Failure to follow this instruction could result in serious personal injury, death and/or property damage

⚠ WARNING: MANUAL RESET PROTECTOR HAZARD
If a tripped manual reset thermal protector is exposed to a temperature less than –7°C (20°F) it may reset and restart the motor automatically. If an application requires a motor with a manual reset thermal protector that will be operated at temperatures less than –7°C (20°F) contact the manufacturer to review the application / motor requirements. Failure to follow this instruction could result in serious personal injury, death and/or property damage

1.2 MECHANICAL SAFETY

⚠ WARNING: LOOSE PARTS HAZARD
Before starting the motor, remove all unused shaft keys and loose rotating parts to prevent them from flying off. Failure to follow these instructions could result in serious personal injury, death and/or property damage.

⚠ WARNING: ROTATING PARTS HAZARD
Keep extremities, hair, jewelry and clothing away from moving parts. Failure to follow these instructions could result in serious personal injury, death and/or property damage.

1.3 ENVIRONMENTAL SAFETY

⚠ WARNING: HAZARDOUS LOCATIONS
(1) The NEC and the local authority having jurisdiction must be consulted concerning the installation and suitability of motors for use in Hazardous Locations. The local authority having jurisdiction must make the final determination of what type of motor is required. The application and operation is beyond the control of the motor manufacturer.
(2) Division 1 Hazardous Locations motors can only be modified or reworked by the manufacturer or a facility that is Listed under UL's category "Motors and Generators, Rebuilt for use in Hazardous Locations". Failure to follow these instructions could result in serious personal injury, death and/or property damage.
(3) Do not use a Hazardous Locations motor with a Variable Frequency Drive (VFD) unless the motor nameplate specifically states that the motor is suitable for use on Pulse Width Modulated (PWM) type VFD power. In addition, the nameplate must be marked with the inverter rating; for example, "2:1 CT", "2 to 1 Constant Torque", etc.

2.0 RECEIVING AND INSPECTION

2.1 INITIAL INSPECTIONS

2.1.1 CHECK PACKING LIST AND INSPECT the packaging to make certain no damage has occurred in shipment. If there is visible damage to the packaging, unpack and inspect the motor immediately. Claims for any damage done in shipment must be made by the purchaser against the transportation company.

2.1.2 TURN MOTOR SHAFT by hand to be certain that it rotates freely. Note: Shaft seals and bearing seals may add drag.

2.1.3 CHECK NAMEPLATE for conformance with purchase order requirements and compliance with power supply and control equipment requirements.

2.2 HANDLING:

⚠ WARNING: FALLING OBJECT HAZARD
Eyebolts or lifting lugs, where provided, are intended for lifting only the motor and accessories mounted by the motor manufacturer (unless specifically stated otherwise on the motor). Utilizing the motor lifting provision to lift other components such as pumps and gear boxes could result in serious personal injury, death and/or property damage.

⚠ WARNING: FALLING OBJECT HAZARD
Before using the lifting provision, check the eyebolts and/or other lifting means to assure they are not bent or damaged and are completely threaded, seated & secured to the motor. Equipment to lift motor must have adequate lifting capacity. While lifting the motor DO NOT stand under or in the vicinity of the motor. Failure to follow these instructions could result in serious personal injury, death and/or property damage.

2.2.1 LIFTING ANGLE LIMITATIONS

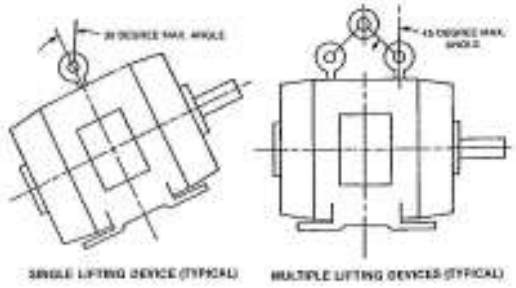

2.3 STORAGE: Motors, not put into service immediately, must be stored indoors in a clean, dry location. Avoid locations with large temperature swings that will result in condensation. Motors must be covered to eliminate airborne dust and dirt. If the storage location exhibits high vibration, place isolation pads under motor to minimize damage to motor bearings.

2.3.1 BEARING LUBRICATION: Bearings are grease packed at the factory; relubrication upon receipt of motor or while in storage is not necessary. If stored more than one year, add grease per lubrication instructions (Table 4-4) before start-up.

2.3.2 SHAFT ROTATION: It is recommended that the motor shaft be rotated 5 to 10 rotations every three months to distribute the grease in the bearings. This will reduce the chance for corrosion to form on the bearing rolling elements and raceways. Note: Shaft seals and bearing seals may add drag.

2.3.3 DAMP OR HUMID STORAGE LOCATIONS: Treat unpainted flanges, shafts, and fittings with a rust inhibitor. Apply appropriate power to the motor's space heaters (if so equipped)

3.0 INSTALLATION AND OPERATION

⚠ **WARNING:** Only qualified personnel who are familiar with the appropriate national code, local codes and sound practices should install or repair electrical motors and their accessories. Installation should conform to the appropriate national code as well as local codes and sound practices. Failure to follow these instructions could result in serious personal injury, death and/or property damage.

⚠ **WARNING: ELECTRICAL LIVE CIRCUIT HAZARD**
Do not touch electrically live parts. Disconnect, Lockout and Tag input power supply before installing or servicing motor (includes accessory devices). Use a voltmeter to verify that power is off before contacting conductors.

3.1 LOCATION

3.1.1 SELECTING A LOCATION: Consideration should be given to environment and ventilation. Motors should be installed in an area that is protected from direct sunlight, corrosives, harmful gases or liquids, dust, metallic particles, and vibration. A motor with the proper enclosure for the expected operating condition should be selected. Provide accessible clearance for cleaning, repair, service, and inspections (See section 3.1.3 for construction clearances). The location should be considered for possible future motor removal / handling. The free flow of air around the motor should not be obstructed.

3.1.2 AMBIENT TEMPERATURE LIMITS: The ambient temperatures of the air inlet to the motor should not exceed 40°C (104°F) or be less than -30°C (-22°F) unless the motor nameplate specifically states an ambient temperature outside of these limits. The ambient inside an enclosure built around the motor shall not exceed the nameplate ambient. For ambient temperatures outside of these limits consult the motor manufacturer.

⚠ **CAUTION: INSULATION DEGRADATION WARNING**
Insulation at high temperatures ages at an accelerated rate. Each 10°C increase in temperature reduces the insulation life by one half.

⚠ **WARNING: HAZARDOUS LOCATIONS AMBIENT LIMIT:** Division 1 Hazardous Locations motors shall **NOT** be operated below –25°C (-13°F) ambient. (Low temperatures reduce the component mechanical properties.)

3.1.3 CONSTRUCTION SELECTION per LOCATION:

3.1.3.1 DRIPPROOF (OPEN) MOTORS are intended for use indoors where the atmosphere is relatively clean, dry, and non-corrosive. Recommended a minimum clearance of ½ the shaft height between vent openings and the nearest obstruction.

3.1.3.2 TOTALLY ENCLOSED MOTORS are suitable for indoor or outdoor standard service applications.

TEAO or AOM (Totally Enclosed Air Over) motors must be mounted in the air stream. When the motor nameplate states a minimum airflow the motor must be mounted in an air stream meeting this minimum value.

TEFC (Totally Enclosed Fan Cooled) motors must meet a minimum distance of ½ the shaft height between the fan guard grill openings and the nearest obstruction.

3.1.3.3 HAZARDOUS LOCATIONS MOTORS: Hazardous Locations motors are intended for installations in accordance with NEC Article 500. For all installations involving Hazardous Locations motors, consult the applicable national codes, local codes, and the authority having jurisdiction.

Division 1 Installations – includes Class I & II: Use only motors that are UL Listed and CSA Certified or UL Listed and UL Certified for Canada. These motors bear a separate nameplate that includes the UL Listing Mark and CSA Certification Mark or includes the UL Listing Mark and the UL Mark for Canada. This plate also bears the phrase: " Electric motor for Hazardous Locations" and is marked with the Class, Group and Operating Temperature Code.

Division 2 Installations – Class I only: Use only motors that are CSA Certified and bear the CSA Certification Mark. These motors include a phrase on the main motor nameplate that indicates the motor is CSA Certified for Class I, Division 2 / Zone 2 locations.

Division 2 Installation – Class II only: Use only Class II motors as described above under "Division I Installations".

⚠ **WARNING: EXPLOSION HAZARD**
A motor should never be placed in an area with a hazardous process or where flammable gases or combustible materials may be present unless it is specifically designed and nameplated for this type of service. Hazardous Locations motors are intended for installations in accordance with NEC Article 500. For all installations involving Hazardous Locations motors, consult the NEC, local codes, and the authority having jurisdiction. Failure to follow these instructions could result in serious personal injury, death and/or property damage. (For other limitations see section 1.3)

3.2 MOUNTING MOTOR:

3.2.1 RIGID BASE (FOOTED): The motor must be securely installed to a rigid foundation or a mounting surface to minimize vibration and maintain alignment between the motor shaft and the load's shaft. The mounting surfaces of the four mounting pads must be flat within 0.01 inches for 210 frame & smaller; 0.015 inches for 250 frame & larger. [IEC 0.25 mm for 130 frame & smaller, 0.38 mm for 160 frame & larger]. This may be accomplished by shims under the motor feet. For special isolation mounting, contact manufacturer for assistance

3.2.2 RIGID BASE HOLE SELECTION -6 OR 8 HOLES

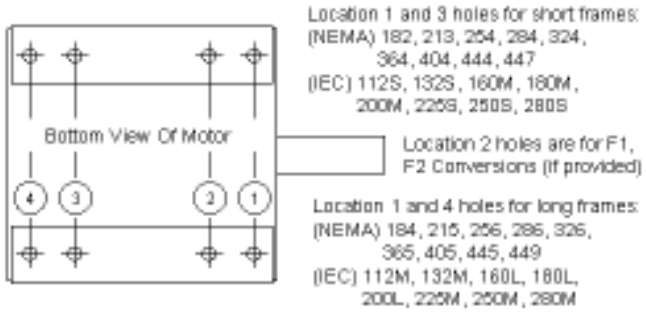

3.2.3 VERTICAL MOUNTING:

CAUTION: ENCLOSURE PROTECTION CAUTION: Most Dripproof rigid base (footed) motors do **NOT** meet "Dripproof" requirements when mounted vertically. If the motor is located in unprotected environments, the addition of a drip cover may be available. Drip covers not available for cast iron rigid base motors.

⚠ **WARNING: FALLING OBJECT HAZARD**
The lifting provision on standard horizontal footed motors is not designed for lifting the motor in a vertical shaft up or shaft down position. (see 2.2.1 lifting angles). Lifting method / provisions for

mounting a rigid base (footed) motor vertically is the responsibility of the installer.

VERTICAL SHAFT DOWN: Most standard horizontal motors thru 449 Fr. (excluding brake motors) can be mounted in a vertical shaft down orientation. For vertical brake motors see section 3.3.6.2.

VERTICAL SHAFT UP:

⚠ **WARNING: HAZARDOUS LOCATIONS VERTICAL MOUNT:** Hazardous locations motors must **NOT** be mounted vertically shaft up without approval by the motor manufacturer. Without proper retaining provisions the rotor may move axially and contact components, creating a spark hazard.

Belted or Radial Load when mounted vertically: The following frame sizes / constructions with applied (axial) down loads within the limit stated are acceptable when mounted vertical shaft up.

Table 3-1 Belted or Radial Load Applications (All speeds)

Frame Size	Enclosure	Construction	Shaft Up OK	Max Applied Down Load[3]
56	TEFC & ODP	Steel	Yes	25 lbs
140	TEFC	Steel & Cast Iron	Yes	25 lbs
	ODP	Steel	Yes	25 lbs
180	TEFC	All	Yes	35 lbs
	ODP	Steel	Yes	35 lbs
210	TEFC	All	Yes	40 lbs
	ODP	Steel	Yes	40 lbs
250	TEFC	All	Yes	40 lbs
	ODP	Steel	Yes	40 lbs
		Cast Iron	No[2]	N/A
280-320	320 TTFC models	Cast Iron	Eng[1]	N/A
	All Other TEFC	Cast Iron & Aluminum	Yes	30 lbs
	ODP	Cast Iron	No[2]	N/A
	TEFC & ODP	Steel	Build Up Only[4]	N/A
360 & Up	TEFC	Cast Iron	Build Up Only[4]	N/A
	ODP	Cast Iron	No[2]	N/A
	TEFC & ODP	Steel	Build Up Only[4]	N/A

Notes:

1 For TEFC model numbers beginning with 324TTFC or 326TTFC consult the motor manufacturer to determine if a build up motor is required.

2 The max applied down load is any applied load external to the motor, including such things as sheave weight, fan loads, axial belt force, pump load, etc. If the application is direct drive with no applied radial load, consult the motor manufacturer.

3 "Build-up only", refers to motors that are specifically ordered and built for shaft up applications. It does not imply that all build-up motors are suitable for shaft up applications.

3.3 APPLICATION ASSEMBLY TO MOTOR:

⚠ **CAUTION: EQUIPMENT DAMAGE:**
Do not connect or couple motor to load until correct rotational direction is established.

3.3.1 GENERAL: PROPER ALIGNMENT of the motor and driven equipment minimizes vibration levels, maximizes bearing life, and extends the overall life of the machinery. Consult the drive or equipment manufacturer for more information.

⚠ **CAUTION: BEARING FAILURE**
During assembly do NOT force components onto the shaft. Striking or hammering the component may result in bearing damage.

3.3.2 DIRECT COUPLING: Use flexible couplings if possible. For applications that apply radial, axial or moment loading on the motor shaft see section 3.3.3.

⚠ **CAUTION: BEARING FAILURE**
Unless approved by the motor manufacturer do **NOT** direct couple a vertical shaft up or roller bearing motor. Direct coupling a vertical shaft up motor or a motor with a roller bearing may result in bearing damage.

3.3.3 DIRECT CONNECTED: Radial loading for direct connected equipment (gears, fans etc.) must be approved by the motor manufacturer unless within the maximum overhung load limits (Table 3-2). Combined loading (axial, radial and/or moments) must be approved by motor manufacturer. For belted loads see section 3.3.4.

Table 3-2 Maximum Radial Load (lbf) @ Middle of the Shaft Extension Length

Frame Number	Motor Rated RPM			
	3600	1800	1200	900
143T	106	166	193	210
145T	109	170	199	218
182T	187	230	261	287
184T	193	237	273	301
213T	319	317	470	510
215T	327	320	480	533
254T	500	631	729	793
256T	510	631	736	820
284T	-	866	990	1100
286T	-	871	1005	1107
324T	-	950	1100	1215
326T	-	950	1113	1230
364T	-	1078	1365	1515
365T	-	1078	1380	1540
404T	-	1388	1590	1762
405T	-	1400	1610	1780
444T	-	1580	1795	2005
445T	-	1520	1795	1985
447T	-	1455	1765	1985
449T	-	1640	1885	2130

Values based on 26,280 hrs B-10 Life
For "End of Shaft" Load multiply value by 0.88
To convert from lbf to N multiply value by 4.4482.

3.3.4 BELTED:

The goal of any belted system is to efficiently transmit the required torque while minimizing the loads on the bearings and shafts of the motor and driven equipment. This can be accomplished by following four basic guidelines:

1. Use the largest practical sheave diameter.
2. Use the fewest number of belts possible.
3. Keep sheaves as close as possible to support bearings.
4. Tension the belts to the lowest tension that will still transmit the required torque without slipping. It is normal for V-belts to squeal initially when line starting a motor

3.3.4.1 Sheave Diameter Guidelines:

In general, smaller sheaves produce greater shaft stress and shaft deflection due to increased belt tension. See Table 3-3 for recommended minimum sheave diameters. Using larger sheaves increases the contact with belts which reduces the number of belts required. It also increases the belt speed, resulting in higher system efficiencies. When selecting sheaves, do not exceed the manufacturer's recommended maximum belt speed, typically 6,500 feet per minute for cast iron sheaves. Determine belt speed by the following formula:

Figure 1

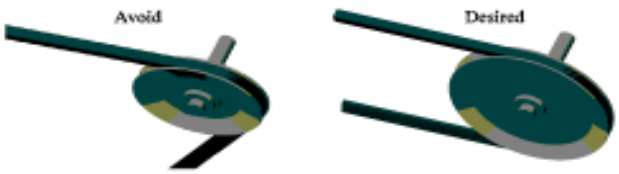

BELT SPEED (Ft/min) = $\dfrac{Shaft\ RPM\ x\ 3.14\ x\ Sheave\ Dia\ (inches)}{12}$

3.3.4.2 Number of Belts

In general, use the fewest number of belts that will transmit the required torque without slipping. See Table 3-3 for recommended maximum number of belts. Each belt adds to the tension in the system, which increases load on the shafts and bearings. Belts are most efficient when operated at or near their rated horsepower.
If the sheaves have more grooves than the number of belts required, use the grooves closest to the motor.

3.3.4.3 Sheave Location

Install sheaves as close to the housing as possible to increase the bearing life of the motor and driven equipment

Figure 2

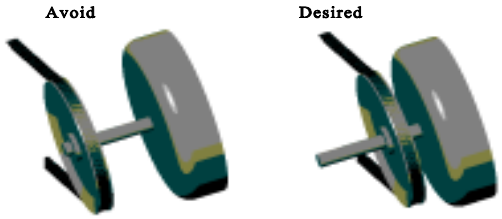

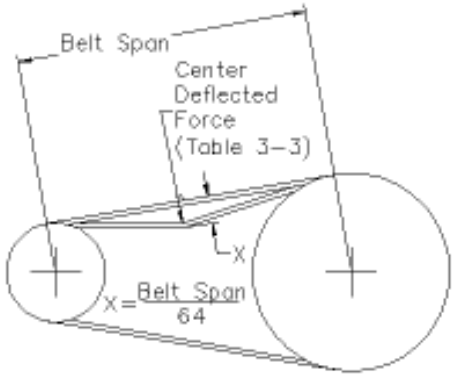

3.3.4.4 Belt Tension

CAUTION: Equipment Failure Caution

Belt tensioning by feel is **NOT** acceptable. Tensioning by "feel" can be very misleading, and can damage motor and equipment.
It is normal for V-belts to squeal initially when line starting a motor.

In general, belt tensions should be kept as loose as possible while still transmitting the required torque without slipping. Belt tensions must be measured with a belt tension gage. These inexpensive gages may be obtained through belt manufacturers, or distributors.

Proper belt tension is determined by measuring the force required to deflect the center of the belt a given distance. The proper deflection (in inches) is determined by dividing the belt span in inches by 64. Calculate the proper deflection and then see Table 3-3 for the required “Deflected Force” to achieve that deflection.
After tensioning the belt, rotate the sheaves for several rotations or operate the system for a few minutes to seat belts into the grooves, then re-tension the belts. New belts will stretch during use, and should be retensioned after the first eight hours of use.

Table 3-3 Recommended Minimum Sheave Diameters, Belt Type, Number of Belts and Deflected Force

Motor Hp	1200 rpm				1800 rpm				3600 rpm			
	Min Sheave Dia (in)	Belt Type	Max # of Belts	Avg. Deflected Force (lbs)	Min Sheave Dia (in)	Belt Type	Max # of Belts	Avg. Deflected Force (lbs)	Min Sheave Dia (in)	Belt Type	Max # of Belts	Avg. Deflected Force (lbs)
0.75	2.2	3VX	1	3.4	2.2	3VX	1	2.2	2.2	3VX	1	1.2
1	2.4	3VX	1	4.0	2.2	3VX	1	3.1	2.2	3VX	1	1.6
1.5	2.4	3VX	2	3.1	2.4	3VX	2	2.1	2.2	3VX	1	2.5
2	2.4	3VX	3	2.8	2.4	3VX	2	2.9	2.4	3VX	1	2.7
3	3.0	3VX	2	3.3	2.4	3VX	3	2.9	2.4	3VX	2	2.3
5	3.0	3VX	3	4.0	3.0	3VX	3	3.7	2.4	3VX	3	2.5
7.5	3.8	3VX	4	4.7	3.0	3VX	4	4.1	3.0	3VX	2	4.2
10	4.4	3VX	4	5.4	3.8	3VX	4	4.3	3.0	3VX	3	3.8
15	4.4	3VX	5	5.4	4.4	3VX	4	5.4	3.8	3VX	3	4.4
20	5.2	3VX	6	6.0	4.4	3VX	6	4.8	4.4	3VX	3	5.0
25	6.0	3VX	7	5.6	4.4	3VX	7	5.2	4.4	3VX	4	4.7
30	6.8	3VX	7	5.9	5.2	3VX	7	5.3				
40	6.8	5VX	4	11.6	6.0	3VX	7	6.0				
50	8.2	5VX	4	14.6	6.8	3VX	8	5.9				
60	8.2	5VX	5	14.1	7.4	5VX	4	13.3				
75	10.0	5VX	5	14.5	8.6	5VX	4	14.3				
100	10.0	5VX	6	16.0	8.6	5VX	6	13				
125	12.0	5V	7	14.1	10.5	5V	6	13.1				
150	13.2	5V	7	15.4	10.5	5V	7	13.4				
200	15.0	5V	8	16.0	13.2	5V	8	13.1				
250	15.0	8V	6	27.6	14.0	5V	9	13.8				
300	16.0	8V	7	27.1	14.0	5V/**8V**	11 / **7**	23.4				
350	16.5	8V	7	30.3	14.5	5V/**8V**	12 / **7**	26.0				
400	17.5	8V	8	29.1	15.0	5V/**8V**	13 / **8**	25.7				
450	18	8V	8	31.6	16.0	5V/**8V**	14 / **9**	25.2				
500	18.5	8V	9	30.7	16.5	5V/**8V**	15 / **9**	26.9				
600					17.5	8V	11	26.3				
700					19.0	8V	12	27.3				
800					20.0	8V	13	28.2				

Contact Motor Manufacturer when Belting 3600 rpm Motors Greater than 25 HP

Notes:

1. Horsepower is the nameplate motor horsepower, and RPM is the motor (driver) speed.
2. Minimum sheave diameters are from NEMA standards where applicable.
3. **For variable speed applications or values outside these recommendations, consult motor manufacturer.**
4. Selections are based on a 1.4 service factor, 5 to 1 speed ratio and various Power Transmission Manufacturers' catalogs.
5. These selections are for Narrow V-belt sections only. Consult manufacturer for details on conventional V-belt sections (A, B, C, D and E), or other belt types.
6. "Average Deflected Force is per section 3.3.4.4 of this document and is the force required to deflect the center of a belt 1/64 of the belt span distance. Tolerance on this force is ±1 lbf for forces ≤10 lbs, and ±2 lbs for forces >10 lbs as measured utilizing a belt tension gage.
7. When more than one belt is required the belts must be a matched set (matched for length).
8. If possible, the lower side of the belt should be the driving side to increase the length of wrap on the sheave).
9. For belted loads do not exceed 125% of 60 Hz operating RPM.

3.3.5 VFD (Variable Frequency Drives) OPERATION:

⚠ WARNING: VFD Motors with Reset Thermal Protectors

UL Recognition, UL Listing, or CSA certification does not apply to motors that are equipped with a manual or automatic reset thermal protector when the motor is operated on VFD power.

⚠ WARNING: Power Factor Correction Capacitors:

Power factor correction capacitors should never be installed between the drive and the motor.

⚠ CAUTION: VFD / Motor Setup:

It is the responsibility of the startup personnel during set up of the VFD / motor system to properly tune the drive to the motor for the specific application per the VFD user manual. The correct voltage boost and volts per hertz settings are application dependent and unique to each motor design. Failure to connect over temperature devices (when provided) will void the warranty.

3.3.5.1 Overspeed Capability:

Belted loads: Do not exceed 125% of 60 Hz operating RPM.

Table 3-4 Maximum Safe Continuous Speed (RPM) For Coupled and Direct Connected Loads

NEMA / [IEC] Frame Size	2-Pole	4, 6, or 8 Pole
56-180 [80-110]	7200 *	5400 *
210-250 [130-160]	5400 *	4200*
280 [180]	5400 *	3600
320 [200]	4500 *	3600
360 [225]	4500 *	2700
400-440 [250-280]	3600	2700
>440 [>280]	3600	1800

* = Fan cooled motors (Totally Enclosed & Hazardous Locations Motors) are limited to a maximum safe continuous speed of 4000 RPM **For higher speeds or shortened duty cycle contact motor manufacturer**

3.3.5.2 Cable Lengths: For optimum insulation life, limit VFD to motor cable lengths of general purpose motors

to Table 3-5 values. Definite purpose VFD motors may accommodate longer cable lengths. For additional information contact motor manufacturer.

Table 3-5 Max Cable Lengths General Purpose Motors

These values are based on 3 kHz carrier frequency. Add suitable VFD output-side filters when exceeding the listed values.

Frame Size	230V	460 V	575 V
NEMA 56-320	600 ft.	125 ft.	40 ft.
NEMA 360-5011	1000 ft.	225 ft.	60 ft.
IEC 80-200	180 m.	40 m.	12 m.
IEC 225-280.	300 m.	70 m.	18 m.

3.3.5.3 VFD Grounding: Equipment grounding conductors may be run in the same conduit as the AC motor power leads. This wire must be used as the equipment ground for the motor and not as the fourth current carrying wire of a "WYE" motor circuit. The grounded metal conduit carrying the output power conductors can provide EMI shielding, but the conduit does not provide an adequate ground for the motor; a separate grounding conductor must be used. Grounding the motor neutral (WYE) of a VFD powered motor may result in a VFD ground fault trip. Improper grounding of an inverter fed motor may result in frame voltages in excess of 500 Volts. Refer to Grounding section 3.4.4

3.3.5.4 VFD – Single Phase:

CAUTION: SINGLE PHASE MOTOR FAILURE:

Single Phase motors are **NOT** suitable for use on VFD power. Connecting a Single Phase Motor to a VFD voids the warranty.

3.3.5.5 Stray Voltage on Accessory Leads:

VFD's will couple stray (common-mode) voltage to motor-mounted RTDs, thermistors, thermostats and space heaters. The leads of these elements must be properly insulated and control input circuits must be designed to withstand this common-mode voltage.

3.3.6 ACCESSORIES / PROVISIONS:

3.3.6.1 General: Carefully read and understand the accessory manufacturer's instructions, supplied with motor. Contact the manufacturer for additional information.

3.3.6.2 Brake Motors:

CAUTION: Vertical Motor Premature Brake Failure

Motors with brakes that are designed for vertical applications are equipped with springs to support the brake pressure plate. Mounting a horizontal brake motor vertically shaft up or down may require a pressure plate spring modification. Failure to modify the brake for the vertical application may result in premature brake failure. If in question, consult brake literature or brake manufacturer.

Brake Solenoid Wiring: Do NOT connect the brake solenoid to the output of a VFD. The brake solenoids must be wired to 50/60 Hz line power

3.3.6.3 Space Heaters:

Motors provided with space heaters have two leads that are brought into the conduit box or into an auxiliary box. These leads are marked "H1", "H2" ("H3", "H4" if a second space heater is supplied). See the space heater nameplate on motor for heater rating.

WARNING: DIVISION 2 EXPLOSION HAZARD

The space heater temperature rating when used in Class I, Division 2 motors shall **NOT** exceed 80% of the auto ignition temperature of the hazardous gas or vapor. See the space heater nameplate on motor for heater Temperature Code and heater rating. Failure to follow this instruction could result in serious personal injury, death and/or property damage

3.3.6.4 Thermal Protection:

General Information: When thermal protection is provided, one of the following will be stamped on the nameplate:

1. **"THERMALLY PROTECTED**" This motor has built in thermal protection. Thermal protectors open the motor circuit electrically when the motor overheats or is overloaded. The protector cannot be reset until the motor cools. If the protector is automatic, it will reset itself. If the protector is manual, disconnect motor from power supply. After protector cools (five minutes or more) press the reset button and reapply power to the motor. In some cases a motor is marked "Auto" and the connection diagram on the motor will identify T'Stat leads – see "2 " below. (See warnings on Manual and Automatic reset protectors - section 1.1)

2. **"WITH OVERHEAT PROTECTIVE DEVICE**": This motor is provided with an overheat protective device that does not directly open the motor circuit. Motors nameplated with this phrase have either thermostats, thermisters or RTD's. The leads to these devices are routed into the motor conduit box or into an auxiliary box. The lead markings are defined on the nameplate (normally "P1", "P2") . The circuit controlled by the overheat protection device must be limited to a maximum of 600 volts and 360 volt-amps. See connection decal provided inside the terminal box cover. Failure to connect these over temperature devices (when provided) will void the warranty.

   WARNING: EXPLOSION HAZARD

   For Hazardous Locations motors provided with thermostats UL and the NEC require connection of thermostat leads into the control portion of a manual reset start circuit. Failure to follow this instruction could result in serious personal injury, death and/or property damage

Resistance Temperature Detectors (RTD): When winding and/or bearing RTDs are provided the RTD lead markings are defined on the nameplate. (Normally "R1", "R2", "R3" etc.)

3.3.6.5 RTD Alarm & Trip Settings:

Tables 3-6 & 3-7 are suggested initial RTD alarm and trip settings. For motors found to operate significantly below these values the settings may be reduced accordingly.

Table 3-6 Winding RTD – Temperature Limit (ºC) 40 ºC Max Ambient

Motor Load	Class B Temp Rise≤ 80ºC		Class F Temp Rise≤ 105ºC	
	Alarm	Trip	Alarm	Trip
Up to 1.0 SF	130	140	155	165
>1.0 to 1.15 SF	140	150	160	165

Table 3-7 Bearing RTD – Temperature Limit (ºC) 40 ºC Max Ambient

Ambient	Alarm	Trip
Up to 40ºC	95	100
> 40ºC	110	115
Bearings that are Heat Stabilized to 150 ºC	130	135

3.3.7 GUARDS:

WARNING: ROTATING PARTS HAZARD

When devices are assembled to the motor shaft, be sure to install protective devices such as belt guards, chain guards, and shaft covers. These devices must protect against accidental contact with extremities, hair, and clothing. Consider the application and provide guarding to protect personnel. Remove all unused shaft keys and loose rotating parts to prevent them from flying off and causing bodily injury. Failure to follow this warning could result in serious personal injury, death and/or property damage.

3.4 ELECTRICAL CONNECTIONS:

WARNING: ELECTRICAL HAZARDS

Before proceeding read Section 1-1 on Electrical Safety. Failure to follow the instructions in Section 1-1 could result in serious personal injury, death and/or property damage

3.4.1 POWER SUPPLY / BRANCH CIRCUIT

WARNING: POWER SUPPLY INCOMPATIBILITY HAZARD

Check power supply to make certain that voltage, frequency and current carrying capacity are in accordance with the motor nameplate. Failure to match motor nameplate values could result in serious personal injury, death and/or property damage

WARNING: BRANCH CIRCUIT SUPPLY HAZARD

Motor and control wiring, fusing, overload protection, disconnects, accessories and grounding must always conform to the applicable electrical codes as well as local codes and sound practices.

3.4.1.1 Branch Circuit Supply to a motor should include a disconnect switch, short circuit current fuse or breaker protection, motor starter (controller) and correctly sized thermal elements or overload relay protection.

3.4.1.2 Fuses, Breakers, Overload Relays

Short Circuit Current Fuses or Breakers are for the protection of the branch circuit. Starter or motor controller overload relays are for the protection of the motor. Each of these should be properly sized and installed per the applicable electrical codes as well as local codes and practices.

WARNING: PROTECTIVE DEVICE DISABLED HAZARD

DO NOT bypass or disable protective devices. Protection removal could result in serious personal injury, death and/or property damage

3.4.1.3 AC Power Supply Limits

Motors are designed to operate within the following limits at the motor terminals:

1- AC power is within +/- 10 % of rated voltage with rated frequency applied. (Verify with nameplate ratings) **OR**

2- AC power is within +/- 5% of rated frequency with rated voltage **OR**

3- A combined variation in voltage and frequency of +/- 10% (sum of absolute values) of rated values, provided the frequency variation does not exceed +/-5% of rated frequency.

4- For 3 phase motors the line to line full load voltage must be balanced within 1%.

5- If the motor is rated 208-230V, the voltage deviations must be calculated from 230V.

CAUTION: Reduced Motor Performance

Operation outside of these limits will degrade motor performance and increase operating temperature.

3.4.2 TERMINAL BOX:

3.4.2.1 Conduit Opening: For ease of connections, motors are typically provided with large terminal boxes. Most motors have conduit access in 90 degree increments, the terminal box conduit opening is typically provided via knockouts, holes with covers, or the terminal box is rotate-able. Fabricated conduit boxes may have a removable plate for the installer to provide correctly sized hole(s).

3.4.2.2 Hazardous Locations Motors:

WARNING: EXPLOSION HAZARDS

(1) Terminal Boxes mounted to motor with a pipe nipple: If a pipe nipple mounted terminal box is removed or rotated it must be reassembled with a minimum of five full threads of engagement.

(2) Component Removal: Do not set a terminal box component on its machined surfaces. Prior to component reassembly wipe clean all machined surfaces.

(3) Machined Surface Gap (Hazardous Locations Terminal Boxes): The gap between mating surfaces with the machined terminal box MUST BE LESS THAN 0.002 inches. This gap must be checked with a feeler gage along the entire perimeter. If there is visible damage to the mating surfaces, or if the gap between these surfaces exceeds 0.002 inches, DO NOT complete the installation and contact the motor manufacturer. Failure to follow these instructions could result in serious personal injury, death and/or property damage

3.4.3 LEAD CONNECTIONS

Electrical connections to be made per nameplate connection diagram or separate connection plate. In making connections follow the applicable electrical code as well as local codes and practices.

WARNING: ELECTRICAL CONNECTION HAZARD

Failure to correctly connect the motor leads and grounding conductor can result in injury or death. Motor lead connections can short and cause damage or injury if not well secured and insulated.

3.4.3.1 Wire Size (Single Phase) Requirements

The minimum wire size for Single Phase, 115 & 230 Volt Circuits must meet table 3-8 for a given distance between motor and either Fuse or Meter Box.

Table 3-8 Minimum Wire Gage Size Single Phase 115 & 230 Volt Circuits

	Distance (Feet) - Motor to Fuse or Meter Box							
Motor	100 Ft.		200 Ft.		300 Ft.		500 Ft.	
HP	115	230	115	230	115	230	115	230
1/4	14	14	10	12	8	10	6	8
1/3	12	14	10	12	6	10	4	8
1/2	10	12	8	10	6	8	4	6
3/4	10	12	6	10	4	8	2	6
1	8	10	6	8	4	6		4
1 1/2	4	10	0	8		6		4
2		8		6		4		2
3		8		6		4		2
5		6		4		2		0

3.4.3.2 Extension Cords (Single Phase Motors):

Where an extension cord(s) is utilized to provide power to the motor the extension cord(s) must be…(1) the proper gauge size per table 3-8, (2) in good working condition (3) properly grounded.

3.4.4 GROUND CONNECTION(S):

WARNING: ELECTRICAL GROUNDING HAZARD

For general information on grounding (USA) refer to NEC Article 250. Improper grounding of an inverter fed motor may result in frame voltages in excess of 500 Volts. In making the ground connection, the installer must make certain that a good electrical connection is obtained between motor and grounding lead. Failure to properly ground motors, per the applicable national code (such as NEC Article 430) and local codes may cause serious injury or death to personnel.

Primary "Internal" Ground: A grounding conductor must be connected to the grounding terminal provided in the terminal housing. This grounding terminal is either a ground screw, ground lug, or a tapped hole to be used with a separately provided ground screw. The internal grounding feature is accessible inside the terminal housing and must be used as the primary grounding connection.

Secondary "External" Ground: Some motors are provided with a supplemental grounding terminal located on the external surface of the motor frame or feet. This external terminal is for supplemental bonding connections where local codes permit or require such connection

3.4.5 START UP:

WARNING: ELECTRICAL SHOCK HAZARD:

Be certain that all connections are secure and the conduit box cover is fastened in place before electrical power is connected. Failure to follow these instructions could result in serious personal injury, death, and/or property damage.

WARNING: LOOSE & ROTATING PARTS HAZARD
Before proceeding read Section 1-2 on Mechanical Safety. Failure to follow the instructions in Section 1-2 could result in serious personal injury, death and/or property damage

WARNING: EXCESSIVE SURFACE TEMPERATURE HAZARD
Motors with the temperature code stated on the nameplate are designed to operate within this limit. Improper application or operation can cause the maximum surface temperature to be exceeded. A motor operated in a Hazardous Location that exceeds this surface temperature limit increases the potential of igniting hazardous materials. *Therefore, motor selection, installation, operation, and maintenance must be carefully considered to ensure against the following conditions:* (1) Motor load exceeds service factor value, (2) Ambient temperature above nameplate value, (3) Voltages outside of limits (3.4.1.3), (4) Loss of proper ventilation, (5) VFD operation exceeding motor nameplate rating, (6) Altitude above 3300 feet / 1000 meters, (7) Severe duty cycles, (8) Repeated starts, (9) Motor stall, (10) Motor reversing, and (10) Single phase operation. Failure to follow these instructions could result in serious personal injury, death and/or property damage.

CAUTION: HOT SURFACE
Normal motor surface temperatures may exceed 90 ° C (194° F). Touching the motor frame may cause discomfort or injury. Surface temperatures should only be measured with suitable instruments and not estimated by hand touch.

3.4.5.1 Start Up - No Load Procedure

1. **Check Instructions:** Before startup carefully read and fully understand these instructions including all warnings, cautions, and safety notice statements.
2. **Motor out of storage after more than three months:** Check winding insulation integrity with a Megger. If winding resistance to ground is less than 1.5 Meg-ohms consult the local authorized service shop before energizing the motor.
3. **Check Installation: Mechanical** - Check tightness of all bolts and nuts. Manually rotate the motor shaft to ensure motor shaft rotates freely. Note: Shaft & bearing seals will add drag.
   Electrical - Inspect all electrical connections for proper terminations, clearance, mechanical tightness and electrical continuity. Be sure to verify connections are made per the nameplate connection diagram or separate connection plate. Replace all panels and covers that were removed during installation before energizing the motor.
4. **Energize Motor: Check Rotation**
   If practical check motor rotation before coupling to the load. Unlock the electrical system. Momentarily provide power to motor to verify direction of rotation. If opposite rotation is required, lock out power before reconnecting motor. If motor has a rotational arrow only operate the motor in the rotation identified. Reapply power to ensure proper operation.
5. **Record No Load Amps, Watts & Voltage:**
   Recommend - To establish a baseline value check and record the no load amps, watts, and voltage.

3.4.5.2 Start Up – Load Connected Procedure

1. **Check Instructions:** Before startup carefully read and fully understand these instructions including all warnings, cautions, & safety notice statements.
2. **Coupling Installation:** Check that the connected equipment is properly aligned and not binding. Check that all guards and protective devices are properly installed.
3. **Energize Motor:** When all personnel are clear of the machine, apply power and verify that the load is not transmitting excessive vibration back to the motor though the shaft or the foundation. Verify that motor amps are within nameplate rating. For repeated starts see 3.4.5.3. The equipment can now be fully loaded and operated within specified limits as stated on the nameplate.

3.4.5.3 Jogging and/or Repeated Starts

Do not start more than twice in succession under full load. Repeated starts and/or jogs of induction motors can cause overheating and immediate failure. Contact the motor manufacturer if it is necessary to repeatedly start or jog the motor.

4.0 MAINTENANCE:

WARNING: Hazardous Locations Motor Repair HAZARD:
Division 1 Hazardous Locations motors can only be modified or repaired by the manufacturer or a facility that is Listed under UL's category "Motors and Generators, Rebuilt for use in Hazardous Locations". Failure to follow these instructions could result in serious personal injury, death and/or property damage.

WARNING: ELECTRICAL SHOCK HAZARD
Electrical connections are to be made by qualified electrical personnel in accordance with all applicable codes, ordinances and sound practices. Failure to follow these instructions could result in serious personal injury, death and/or property damage. Only qualified personnel who are familiar with the applicable national codes, local codes and sound practices should install or repair electric motors and their accessories.

WARNING: ELECTRICAL LIVE CIRCUIT HAZARD
Do not touch electrically live parts. Disconnect, lockout and tag input power supply before installing or servicing motor (includes accessory devices).

4.1 GENERAL INSPECTION

Inspect the motor approximately every 500 hours of operation or every three months, whichever occurs first. Keep the motor clean and the ventilation and fin openings clear. The following steps should be performed at each inspection:

4.1.1 VENTILATION: Check that the ventilation openings and/or exterior of the motor is free of dirt, oil, grease, water, etc, which can accumulate and block motor ventilation. If the motor is not properly ventilated, overheating can occur and cause early motor failure.

4.1.2 INSULATION: Use a "Megger" periodically to ensure that the integrity of the winding insulation has been maintained. Record the Megger readings. If winding resistance to ground is less than 1.5 Meg-ohms consult the local authorized service shop before re-energizing the motor.

4.1.3 ELECTRICAL CONNECTIONS: Check all electrical connectors to be sure that they are tight.

4.2 LUBRICATION & BEARINGS:

The lubricating ability of grease (over time) depends primarily on the type of grease, the size of the bearing, the speed at which the bearing operates and the severity of the operating conditions. Longer bearing life can be obtained if the listed recommendations are followed:

NOTE: If lubrication instructions are provided on the motor nameplate, the nameplate instructions will supersede these instructions. Motors marked "Permanently Lubricated" do not require additional service.

CAUTION: BEARING / MOTOR DAMAGE WARNING
Lubricant should be added at a steady moderate pressure. If added under heavy pressure bearing shield(s) may collapse. Over greasing bearings greatly increases bearing friction and can cause premature bearing and/or motor failure.

4.2.1 GREASE TYPE (unless nameplate states otherwise):
Nameplate Ambient Temperature between -30°C (-22°F) to 65°C (150°F) inclusive: Recommended grease for standard service conditions is Mobil Polyrex ® EM. Equivalent and compatible greases include: Texaco Polystar RB, Rykon Premium #2, Pennzoil Pen 2 Lube, Chevron SRI & Mobil SHC 100.

Nameplate Ambient Temperature below -30°C (-22°F): Special low temperature grease is recommended, such as Aeroshell 7 or Beacon 325 for ball bearings and Mobil SHC 100 for roller bearings.

Nameplate Ambient Temperature above 65°C (150°F): Dow Corning DC44 or equivalent, a special high temperature grease is required. Note that Dow Corning DC44 grease does not mix with other grease types.

4.2.2 BEARING OPERATING TEMPERATURE:

CAUTION: HOT SURFACE

The external surface temperature of the end shield (bracket) bearing hub may reach 100° C (212° F) during normal operation. Touching this surface may cause discomfort or injury. Surface temperatures should only be measured with suitable instruments and not estimated by hand touch.

For RTD settings see Table 3-7.

4.2.3 LUBRICATION INTERVALS: (For motors with regreasing provisions)

Eq. 4.2 Lubrication Interval = [(Table 4-1) hrs] x [Interval Multiplier (Table 4-2)] x [Construction Multiplier (Table 4-3)]

Table 4-1 Lubrication Intervals (Hours) These values are based on average use.

NEMA / [IEC] Frame Size	Operating Speed – RPM (See Table 3.4 for Maximum Operating Speed)					
	<7200	<5400	<4500	<3600	<1800	<1200
56-180 [80-110]	2500 Hrs.	4000 Hrs	5000 Hrs	6000 Hrs.	17000 Hrs.	20000 Hrs.
210-250 [130-160]		2500 Hrs	4000 Hrs	5000 Hrs.	12000 Hrs.	16000 Hrs.
280 [180]		2000 Hrs	3000 Hrs	4000 Hrs.	10000 Hrs.	14000 Hrs.
320 [200]			2000 Hrs	3000 Hrs.	9000 Hrs.	12000 Hrs.
360 [225]			1500 Hrs	2000 Hrs.	8000 Hrs.	10000 Hrs.
400-440 [250 – 280]				1500 Hrs.	4000 Hrs.	7000 Hrs.
>440 [>280]				1000 Hrs.	3000 Hrs.	5000 Hrs.

Seasonal Service: If motor remains idle for more than six months, Lubricate at the beginning of the season, then follow lubrication interval.

Do not exceed maximum safe operating speed Table 3-4 without manufacturer's approval

Table 4-2 Service Conditions

Use highest level Multiplier: Maximum Ambient Temperature and Contamination are independent factors

Severity of Service	Maximum Ambient Temperature	Atmospheric Contamination	Multiplier
Standard	Less than 40° C (104° F)	Clean, Slight Corrosion, indoors, less than 16 hrs per day	1.0
Severe	Above 40° C (104° F) to 50° C	Moderate dirt or Corrosion or outdoors or more than 16 hrs per day	0.5
Extreme	Greater than 50° C or Class H Insulation	Severe dirt or Abrasive dust or Corrosion	0.2

Table 4-3 Construction Multiplier

Construction	Multiplier
Angular Contact or Roller Bearing	0.5
Vertical Motor	0.5
All others	1.0

Table 4-4 Relubrication Amounts

Frame Size		Volume		
NEMA	IEC	Cu. In.	Fluid oz	ml
48-56	80	0.25	0.14	4.0
143-145	90	0.25	0.14	4.0
182-184	110	0.50	0.28	8.0
213-215	130	0.75	0.42	12.5
254-256	160	1.00	0.55	16.0
284-286	180	1.50	0.83	25.0
324-326	200	2.00	1.11	33.0
364-365	225	3.00	1.66	50.0
404-405	250	3.80	2.11	62.0
444-449	280	4.10	2.27	67.0
>449	>280	4.50	2.50	74.0

For regreasing while operating multiply volume by 125%.

4.2.4 LUBRICATION PROCEDURE: (For Motors with Regreasing Provisions)

CAUTION: BEARING DAMAGE WARNING
Added grease must be compatible with the original equipment's grease. If a grease other than those stated in 4.2.1 is to be utilized contact the motor manufacturer. Nameplate information supersedes section 4.2.1 (GREASE TYPE). New grease must be free of dirt. Failure to follow these instructions and procedure below may result in bearing and/or motor damage.

For an extremely dirty environment, contact the motor manufacturer for additional information.

LUBRICATION PROCEDURE:

1. Clean the grease inlet plug or zerk fittings prior to regreasing.
2. (If present) Remove grease drain plug and clear outlet hole blockage.

CAUTION: GREASE DRAIN PLUGGED:
Old grease may completely block the drain opening and must be mechanically removed prior to regreasing. Forcing a blocked drain open by increased greasing pressure may collapse bearing shields and / or force excess grease through the bearings and into the motor.

3. Add grease per Table 4-4
4. Re-install grease inlet and drain plugs (if removed).

⚠ WARNING: EXPLOSION HAZARD
Do NOT energize a Hazardous Locations motor without all grease fittings properly installed.

4.2.5 EXAMPLE: LUBRICATION

Assume - NEMA 286T (IEC 180), 1750 RPM Vertical motor driving an exhaust fan in an ambient temperature of 43° C and the atmosphere is moderately corrosive.

1. Table 4-1 list 10,000 hours for standard conditions.
2. Table 4-2 classifies severity of service as "Severe" with a multiplier of 0.5.
3. Table 4-3 lists a multiplier value of 0.5 for "Vertical"
4. (Eq. 4.2) Interval = 10,000 hrs x 0.5 x 0.5 = 2500 hrs

Table 4-4 shows that 1.5 in^3 of grease is to be added.

Relubricate every 2,500 hrs of service with 1.5 in^3 of recommended grease.

4.3 TROUBLE-SHOOTING

⚠ WARNING: READ INSTRUCTIONS:
Before trouble-shooting a motor, carefully read and fully understand the warnings, cautions, & safety notice statements in this manual.

⚠ WARNING: Hazardous Locations Motor Repair:
Motors nameplated for use in Division 1 Hazardous Locations can only be disassembled, modified or repaired by the plant of manufacturer or a facility that is Listed under UL's category "Motors and Generators, Rebuilt for use in Hazardous Locations". Failure to follow these instructions could result in serious personal injury, death and/or property damage

CAUTION: DISASSEMBLY APPROVAL REQUIRED:
Motor disassembly must be performed by a party approved by the motor manufacturer. To disassemble the motor without approval voids the warranty.

4.3.1 GENERAL TROUBLE-SHOOTING WARNINGS

1. **DISCONNECT POWER TO THE MOTOR BEFORE PERFORMING SERVICE OR MAINTENANCE.**
2. **Discharge all capacitors before servicing motor.**
3. **Always keep hands and clothing away from moving parts.**
4. **Be sure required safety guards are in place before starting equipment.**
5. **If the problem persists contact the manufacturer.**

4.3.2 Motor Trouble-shooting Cause / Corrective Action - Table 4-5

Issue:	Likely Cause:	Corrective Action:
Motor fails to start upon initial installation:		
A.)	Supply voltage is too low or is severely unbalanced (one phase is low or missing).	(1) Check power supply fuses (2) Match motor lead wiring to nameplate connection diagram and supply voltage (3) Ensure that steady state supply voltage at motor terminals is within limits (see section 3.4.1.3). Correct as needed (4) Obtain correct motor to match actual supply voltage.
B.)	Motor leads are miswired at conduit box.	
C.)	Driven load exceeds motor capacity	(1) Verify that motor & load turn freely (2) Disconnect motor from load & ensure motor turns freely. Note: Roller bearings make noise when motor is uncoupled and shaft is rotated (3) Verify that motor starts when disconnected from load (4) Remove excessive / binding load if present.
D.)	Load is jammed.	
E.)	Fan guard is bent and making contact with fan	Replace fan guard & fan (if blades are damaged)
F.)	VFD with power factor capacitors installed	Remove power factor correction capacitors if equipped
G.)	VFD with motor neutral lead grounded	Ensure that motor neutral lead is ungrounded
H.)	VFD programmed incorrectly	(1) Repeat checks listed above (2) Verify that VFD current limit and starting boost are set correctly (5) Double-check motor and feedback parameter settings and VFD permissives (6) Repeat autotune (for vector drives) procedure (7) Consult VFD supplier.
Motor has been running, then slow down, stalls, or fails to restart:		
A.)	Supply voltage has drooped or has become severely unbalanced	(1) Replace fuse or reset circuit breaker. Allow motor to cool down before resetting manual protector on motor. **Warnings** - See section 1.1 for automatic and manual reset protector warnings (2) Verify that rated and balanced supply voltage has been restored before restarting motor. Measure voltage during restart. Ensure that steady state supply voltage at motor terminals is within limits (see section 3.4.1.3).
B.)	Motor is overloaded	(1) Verify that motor & load turn freely. Repair binding components as needed (2) Reduce driven load to match motor capacity or increase motor size to match load requirements.
C.)	Motor bearings are seized	
D.)	Load Is jammed.	
E.)	VFD will not restart motor after tripping	(1) Check fault codes on VFD and follow VFD troubleshooting procedures (2) Verify that VFD input voltage is balanced and within limits (3) Remove excessive mechanical load if present.
F.)	Capacitor failure on single phase motor (if equipped)	**Warning: Potential Shock Hazard**: Contact service shop to check capacitor.
Motor takes too long to accelerate:		
A.)	Motor leads are not connected correctly	Match motor lead wiring to nameplate diagram.
B.)	Supply voltage has drooped or become severely unbalanced.	(1) Ensure that steady state supply voltage at motor terminals is within limits (see section 3.4.1.3). Correct as needed (2) Obtain correct motor to match actual supply voltage.
C.)	Load exceeds motor capability	Determine correct motor size and contact motor representative to obtain replacement motor.
D.)	Faulty start capacitor (Single Phase)	Motor may be too small for load. Record acceleration time. Start capacitors may fail if acceleration time exceeds 3 seconds.
E.)	Mechanical Failure	(1) Check to make sure motor & load turn freely (2) Disconnect motor from load & ensure motor turns freely
Motor rotates in the wrong direction:		
A.)	Incorrect wiring connection at motor	[Single Phase] Reconnect motor according to wiring schematic provided. Note: Some motors are non-reversible
		[Three Phase] Interchange any two power supply (phase) leads.
Motor overheats or overload protector repeatedly trips		
A.)	Driven Load is excessive	(1) If motor current exceeds nameplate value, ensure that driven load has not increased. Correct as needed. (2) If new motor is a replacement, verify that the rating is the same as the old motor. If previous motor was a special design, a general purpose motor may not have the correct performance.
B.)	Ambient temperature too high	Most motors are designed to operate in an ambient up to 40 °C. (See section 4.2.2 Hot Surface Caution)
C.)	Motor cooling fins and/or vent openings blocked	Remove foreign materials – clear vent openings, fan guard air inlets and frame fins (TEFC motors)
D.)	Insufficient Air Flow	TEAO (Totally Enclosed Air Over) motors: Measure airflow next to motor surface and obtain minimum requirements from motor manufacturer.

	E.)	Motor is started too frequently	See section 3.4.5.3
	F.)	Supply voltage too low, too high, or unbalanced	(1) Ensure that steady state supply voltage at motor terminals is within limits (see section 3.4.1.3) Correct as needed (2) Reconnect motor per input voltage (3) Obtain correct motor to match power supply.

Motor Vibrates

	A.)	Motor misaligned to load.	Realign load
	B.)	Load out of balance (Direct drive application)	(1) Ensure that load is dynamically balanced: (2) Remove motor from load and inspect motor by itself. Verify that motor shaft is not bent. Rule of thumb is 0.002" runout for shafts extension lengths up to 3.00". Add 0.0005" per every additional inch of shaft length beyond 3.00".
	C.)	Uneven tension on multiple belts	Mixing new with used belts. Replace multiple belt applications with a complete set of matched belts.
	D.)	Driven load operating at resonant point / natural frequency.	(1) De-energize motor and record vibration as load coasts from 100% speed to 0 RPM. If vibration drops immediately, vibration source is electrical. If levels do not drop immediately, source is mechanical (2) Redesign system to operate below the resonant point (3) On VFD-driven loads, program skip frequencies to bypass resonant points (4) Increase carrier frequency to obtain <3% THD current (5) On variable torque loads reduce volts/hertz below base speed.
	E.)	VFD torque pulsations	(1) Adjust VFD to obtain <3% THD current @ rated motor current (2) Adjust VFD stability for smooth operation. Vector drives may be unstable at light load.
	F.)	Motor miswired at terminal box	Match motor lead wiring to nameplate connection diagram.
	G.)	Uneven, weak or loose mounting support.	Shim, strengthen or tighten where required.
	H.)	Motor bearings defective	Test motor by itself. If bearings are bad, you will hear noise or feel roughness. Roller bearings are normally noisy when operated without load. If sleeve bearing, add oil per nameplate instructions. For motors with regreasing provisions, add grease per relubricating instructions (see section 4.2.3). If noise persists contact warranty service.
	I.)	Motor out of balance	Disconnect from load. Set motor on rubber pads on solid floor. Secure a ½ height key in shaft keyway and energize from balanced power supply @ rated voltage. Record vibration levels and compare with appropriate standards. If excessive vibration persists contact motor manufacturer.

Bearings repeatedly fail.

	A.)	Load to motor may be excessive or unbalanced	(1) If belt drive check system per section 3.3.4. (2) Other than belting, check loading on motor shaft. An unbalanced load will also cause the bearings to fail. (3) Check runouts of mating components, such as a C-face and pump flange.
	B.)	Bearings contaminated.	Motor enclosure not suitable for environment. Replace with correct enclosure construction
	C.)	Incorrect grease or bearings for ambient extremes.	See section 4.2.1
	D.)	VFD bearing damage	Ground brush, common mode filter, or insulated bearings must be added. Contact motor manufacturer.

Motor, at start up, makes a loud rubbing, grinding, or squealing noise.

	A.)	Contact between rotating and stationary components	Belt squeal during across the line starting is normal: (1) Verify that supply voltage is within limits (see section 3.4.1.3). (2) Ensure that motor lead wiring matches nameplate connection diagram: (3) Isolate motor from load. (4) To locate point of contact turn motor shaft by hand. (5) If point of contact is not located contact motor service shop.

Start capacitors repeatedly fail.

	A.)	The motor acceleration time is too long	Motor may be too small for load. Record acceleration time. Start capacitors may fail if acceleration time exceeds 3 seconds.
	B.)	Motor is being started too frequently	Excessive starting will damage motor capacitors. Contact motor manufacturer if motor is started more than 20 times/hour or if acceleration time exceeds 3 seconds.
	C.)	Motor voltage low	Verify that voltage at the motor terminals is within limits (see section 3.4.1.3).
	D.)	Defective start switch inside motor	Motor internal switch failure overheats start capacitor. Contact service shop or motor manufacturer.

Run capacitor fails.

	A.)	High ambient temperature	Verify that the ambient does not exceed motor's nameplate value

	B.)	Input voltage exceeds limit	Verify that voltage to the motor terminals is within limits (see section 3.4.1.3).
	C.)	Power surge to motor (caused by lightning strike or other high transient voltage).	If a common problem, install surge protector.

This Solution is based on the use of EPT COMPONENTS. Substitution of competitive product may result in reduced drive life and/or unsatisfactory performance.

Solution #982525, Selection #10

Solutia - Krummrich SVE S.O. # 12936
711 URAI Marathon E984B (40 HP)
1800 RPM to 1895 RPM

Bill of Materials

Qty	Part Number
1	3R5V103
1	R1 2 1/8
1	3R5V97
1	R1 1 9/16
3	5VX800

EPT EDGE Browning Drive Technical Specifications

	Required	Actual
Driver Speed:	1800	1800
Driven Speed:	1895	1893/1893
Center Distance:	24.00-28.00 in.	24.38 in.
Input Power:	40.00 HP	40.00 HP
Service Factor:	2.30	2.37
Options Invoked:	Yes	
Tension:	6.63 Lb. should deflect belt 0.38 In.	
Hub Load:	472 Lb. 'running' Hub Load	

7120 Buffington Rd.
Florence, KY 41042
Customer Service: 1-800-354-9825
Technical Questions: 1-800-626-2093

Driver Sheave: 3R5V103

PD (5V)=10.2
OL=3.359375
OD=10.3
F=2.375
L=2.875
P=0.75
C=0.1875
X=2
G=0.9375
E=0.234375
H=5.375
WT=26.15

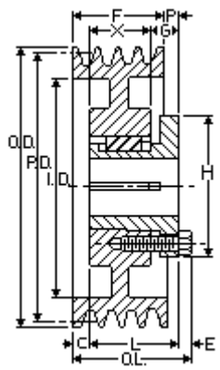

Driver Bushing: R1 2 1/8

Bore (In)=2.125
D (Large End)=4
D (Small End)=3.875
H=5.375
L=2.875
R=0.28125
S=0.234375
T=2.21875
U=0.625
V=4.625
W=0.75
X=1.9375
Y=0.28125
WT=8

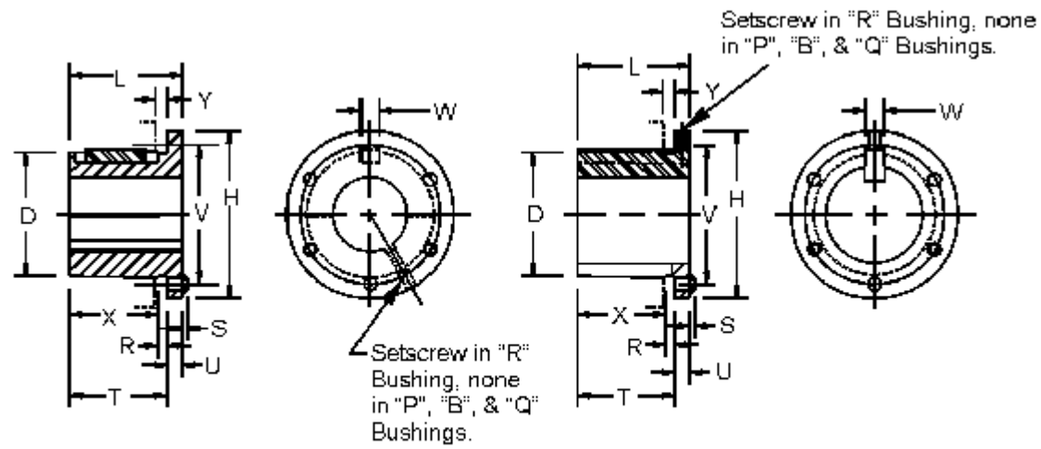

"P", "B", "Q", & "R" BUSHINGS

Type 1 Type 2

Driven Sheave: 3R5V97

PD (5V)=9.65
OL=3.359375
OD=9.75
F=2.375
L=2.875
P=0.75
C=0.1875
X=2
G=0.9375
E=0.234375
H=5.375
WT=25.1

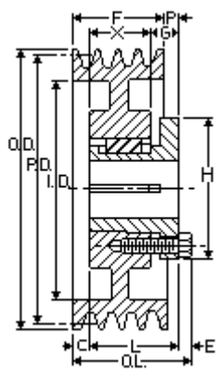

Driven Bushing: R1 1 9/16

Bore (In)=1.5625
D (Large End)=4
D (Small End)=3.875
H=5.375
L=2.875
R=0.28125
S=0.234375
T=2.21875
U=0.625
V=4.625
W=0.75
X=1.9375
Y=0.28125
WT=9.16

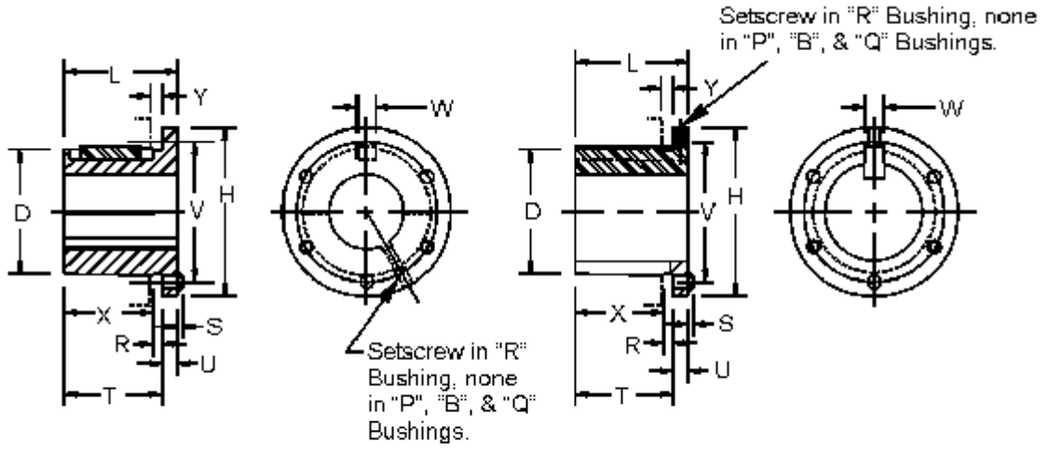

"P", "B", "Q", & "R" BUSHINGS

Type 1 **Type 2**

BROWNING V-Belt Drive Inputs

en español

Description (for your future reference)

Solutia - Krummrich SVE S.O. # 12936

711 URAI Marathon E984B (40 HP)

1800 RPM to 1895 RPM

Shaft Parameters

	Driver		Driven	
Shaft Speed	1800	RPM	1895	RPM
Shaft Dia.	2.12500	in. / mm	1.56250	in. / mm
	Frac/Dec		Frac/Dec	

Drive Type

- (●) Fixed Speed
- ( ) Variable Speed

Output Mode ?

(●) Inch ( ) Metric

Unit of Measure/Power

Input Power 40.00 (●) HP ( ) kW

Service Factor 2.30

Service Factor Suggestions

Center Distance

(●) Inch ( ) mm

Min. 24.00 Max. 28.00

Options

- [ ] Show Net Price
- EPT One Piece
- [ ] Display Customer Part #'s
- [ ] Show Sheave Interchanges
- [x] Enable Drive Options Drive Options...

This Solution is based on the use of EPT COMPONENTS. Substitution of competitive product may result in reduced drive life and/or unsatisfactory performance.

Prepared by John Dunn, BISCO Environmental on 9/27/2011 (Solution #982525)

No.	Driver Sheave	Driver Bushing	Driven Sheave	Driven Bushing	Belt	Qty	Actual C.D. in.	Actual S.F.	Driven Speed	Cost
1.	4B5V86	B	4B5V80	B	5VX750	4	24.31	2.50	1933/1933	1.000
	Correct tension for this drive (5.75 Lb. should deflect belt 0.38 In.) will have 566 Lb. 'running' Hub Load									
2.	3R5V103	R1	3B5V94	B	5VX800	3	24.53	2.31	1933/1933	1.023
	Correct tension for this drive (6.67 Lb. should deflect belt 0.38 In.) will have 483 Lb. 'running' Hub Load									
3.	4B5V90	B	4B5V86	B	5VX780	4	25.03	2.75	1883/1883	1.046
	Correct tension for this drive (5.63 Lb. should deflect belt 0.39 In.) will have 526 Lb. 'running' Hub Load									
4.	4B5V94	B	4B5V90	B	5VX780	4	24.40	2.91	1879/1879	1.074
	Correct tension for this drive (5.59 Lb. should deflect belt 0.38 In.) will have 503 Lb. 'running' Hub Load									
5.	5B5V68	Q1	5B5V66	Q1	5VX710	5	24.82	2.34	1854/1854	1.134
	Correct tension for this drive (5.28 Lb. should deflect belt 0.39 In.) will have 681 Lb. 'running' Hub Load									
6.	10Q3V69	Q2	10Q3V65	Q2	3VX710	10	24.98	2.35	1911/1911	1.139
	Correct tension for this drive (2.58 Lb. should deflect belt 0.39 In.) will have 704 Lb. 'running' Hub Load									

7.	5TB94	Q2	5TB90	Q2	BX76	5	24.46	2.37	1877/1877	1.150	

Correct tension for this drive (4.96 Lb. should deflect belt 0.38 In.) will have 492 Lb. 'running' Hub Load

8.	5B5V70	Q1	5B5V66	Q1	5VX710	5	24.67	2.35	1907/1907	1.152	

Correct tension for this drive (5.29 Lb. should deflect belt 0.39 In.) will have 683 Lb. 'running' Hub Load

9.	5B5V70	Q1	5B5V68	Q1	5VX710	5	24.51	2.44	1852/1852	1.164	

Correct tension for this drive (5.22 Lb. should deflect belt 0.38 In.) will have 661 Lb. 'running' Hub Load

10.	3R5V103	R1	3R5V97	R1	5VX800	3	24.38	2.37	1893/1893	1.171	

Correct tension for this drive (6.63 Lb. should deflect belt 0.38 In.) will have 472 Lb. 'running' Hub Load

*** Belt tension shown is for used belt(s). Multiply the lbs. of force shown x 1.5 for new belt installation.**

Drives above meet your criteria - Selection below is best disregarding options

4B5V86	B	4B5V80	B	5VX750	4	24.31	2.50	1933/1933	1.000	

Correct tension for this drive (5.75 Lb. should deflect belt 0.38 In.) will have 566 Lb. 'running' Hub Load

Return To Top

Series D

D33H CHAMBER-ABSORPTION SILENCERS

Application

Blower Discharge Silencer for maximum silencing at blower speeds above transition speed.

Design

A multi-chamber silencer containing a high frequency absorption device in addition to a special arrangement of volumes and air passageways to effectively reduce both pulsation and excessive high frequency through the process of converting noise energy into heat. D33H may be installed horizontally or vertically. Design parameters permit nozzle orientation to suit installation requirements.

Construction

All welded steel sheet and plate construction for long service life. Standard acoustic absorption material temperature limit is 300°F. Exterior surfaces are prime coated. Flanges are drilled to match 125 lb. American Standard Flanges. Inspection openings, mounting brackets, relief valve nozzles or special paint are available at extra charge.

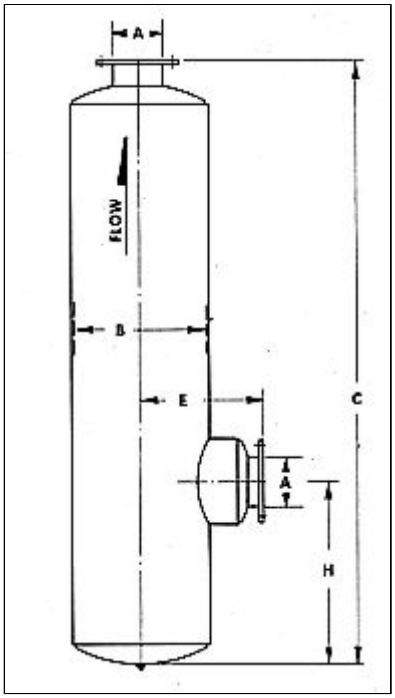

Model	A	B	C	E	H		Wt.
					Min.	Max.	
D33H - 2	2*	8	30	9	6	10	30
D33H - 2 1/2	2 1/2*	10	31	10	7	11	40
D33H - 3	3*	10	49	12	7	11	50
D33H - 4	4**	14	50	14	8	17	120
~~D33H - 5~~	~~5~~	~~16~~	~~62~~	~~15~~	~~9~~	~~20~~	~~165~~
D33H - 6	6	18	69	17	10	24	215
~~D33H - 8~~	~~8~~	~~22~~	~~95~~	~~26~~	~~12~~	~~26~~	~~715~~
D33H - 10	10	26	120	34	14	36	958
D33H - 12	12	30	133	40	16	40	1353
D33H - 14	14	36	165	48	17	40	1826
D33H - 16	16	42	179	54	19	44	2906
D33H - 18	18	48	186	60	21	46	4175
D33H - 20	20	48	198	66	22	47	4525
D33H - 22	22	54	211	72	24	48	5337
D33H - 24	24	54	229	72	26	54	6560

* NPT Connections
** Available in NPT or Flange Connections

TYPICAL ATTENUATION CURVE

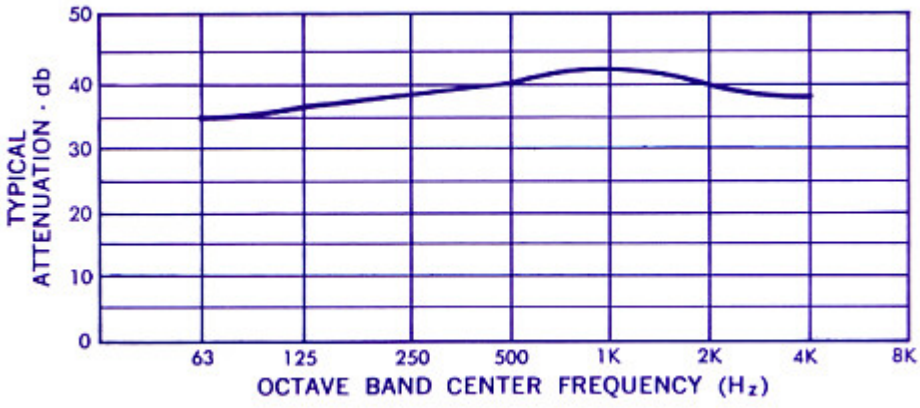

Back

Back to page SERIES D

INLINE AIR FILTERS

F65V

INLINE AIR FILTERS - VACUUM SERVICE ONLY

The Series F65V Inline Air Filter is designed to mount directly in the air piping system for engines, blowers or compressors. The filter element, which is fabricated from pleated paper media, has an efficiency of 99% on 1 micron particles and larger. The housing is designed to withstand a full vacuum. Pressure taps are provided on the intake and discharge nozzles for installation of a pressure drop indicator or switch by the customer. The F65V Inline Air Filter surfaces are prime coated with a red oxide primer.

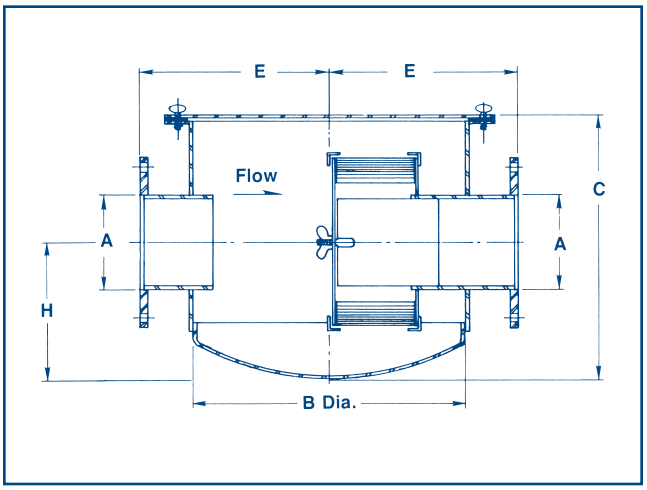

ALTERNATE FILTRATION MEDIA
AVAILABLE FOR F65V

Cleanable Polyurethane Foam - 98% on 10 micron particles
Cleanable Polyester Felt - 98% on 3 micron particles
Epoxy Coated Wire Mesh - 90% on 10 micron particles (When Oil Wetted)

FOR PRESSURE SERVICE USE F65 (See Page 2)

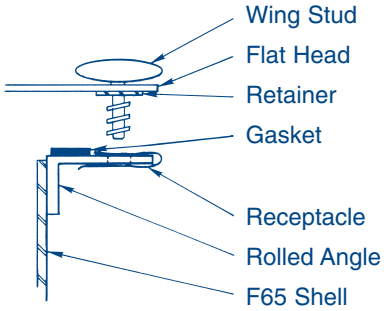

F65V up to and including 8" size:
Coarse threaded wing studs allow for easy access to the F65V for servicing the filter elements. See diagram at left.

F65V SERIES

MODEL	A	B	C	E	H	RATED CFM(1)	WEIGHT	REPLACEMENT ELEMENT NUMBER
F65V-2	2 NPT	12	10¾	9	5	135	38	F8-108
F65V-2½	2½ NPT	12	10¾	9	5	180	40	F8-108
F65V-3	3 NPT	16	15¼	11	7	285	70	F8-109
F65V-4	*4 FLG	16	15¼	11	7	520	77	F8-109
F65V-5	*5 FLG	16	15¼	11	7	750	80	F8-109
F65V-6	*6 FLG	18	18⅝	12	10	1075	100	F8-110
F65V-8	*8 FLG	24	19½	15	10	1800	180	F8-111

*Flanges match 125# ASA. Diameter and Drilling.
(1) Rated capacity is based upon a maximum exit velocity of 5500 fpm.

COMPACT FILTER SILENCERS

"FS" Series 4" - 6" 125/150# Pattern

APPLICATIONS

- Industrial & Severe Duty
- Blowers - Side Channel & PD Type
- Piston Compressors
- Screw Compressors
- Hydraulic Breathers – fine filtration
- Engines
- Fans
- Construction
- Medical
- Pneumatic Conveying
- Waste Water Aeration
- Sparging
- Factory Air

FEATURES & SPECIFICATIONS

- Polyester: 99%+ removal efficiency standard to 5 micron
- Paper: 99%+ removal efficiency standard to 2 micron
- Fully drawn weatherhood - no welds to rust or vibrate apart
- Tubular silencing design - tube is positioned to maximize attenuation and air flow while minimizing pressure drop
- Durable carbon steel construction with baked enamel finish and powder coated weatherhood
- Interchangeable elements: Polyester, Paper
- Low pressure drop center bracket and outlet pipe design
- Temp (continuous): min -15°F (-26°C) max 220°F (104°C)
- Filter change out differential: 10"-15" H_2O Over Initial Delta P
- Pressure drop graphs available upon request

TYPICAL NOISE ATTENUATION – FS SERIES

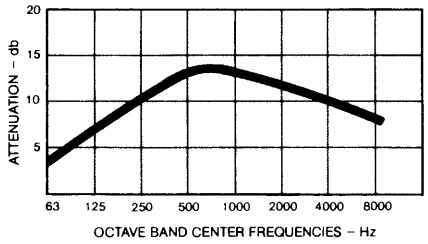

- Noise attenuation may vary due to the wide range of applications and machines

OPTIONS (Inquiries Encouraged)

- Various media available
- 1/8" & 1/4" tap holes
- Pressure Drop Indicator
- Available in ***Stainless Steel***
- Epoxy coated housings
- Hot dipped galvanized housings
- Special connections, NPT

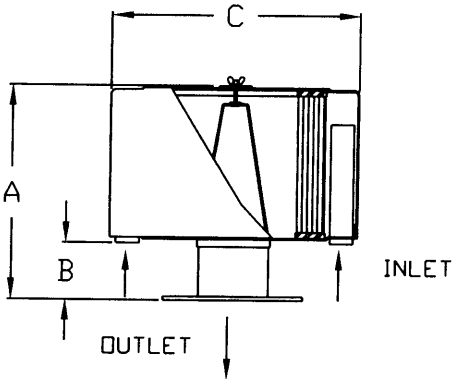

Dimension tolerance ± 1/8"

I = Industrial Duty S = Severe Duty E = Extreme Duty

	with Polyester Element	with Paper Element	MPT Outlet	DIMENSIONS - inches A	B	C	Rated Flow SCFM Piston	Screw, Blower, Fan	Element Rating	No. of Tubes	Approx. Wt. lbs
I	FS-235P-400F	FS-234P-400F	4"	14	4	16	300	520	570	9	33
S	FS-245P-400F	FS-244P-400F	4"	14	4	16	450	520	880	9	35
E	FS-275P-400F	FS-274P-400F	4"	14	4	16	450	520	1100	9	39
I	FS-245P-500F	FS-244P-500F	5"	14	4	16	500	800	880	14	38
S	FS-275P-500F	FS-274P-500F	5"	14	4	16	650	800	1100	14	41
I	FS-275P-600F	FS-274P-600F	6"	16	5 1/4	16	650	1100	1100	18	42

125/150# Pattern Flg	DIMENSIONS - inches O.D.	B.C.	B.H.	No. of Holes	Flange Thickness
4"	9	7 1/2	0.75	8	0.38
5"	10	8 1/2	0.88	8	0.38
6"	11	9 1/2	0.88	8	0.38

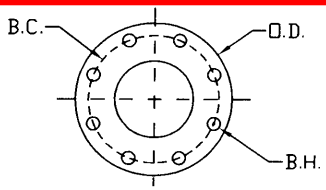

Solberg - Where the Best is in Store for You!

1151 W. Ardmore Ave. • Itasca, IL 60143-1387 • (630) 773-1363 • Fax: (630) 773-0727
E-mail: sales@solbergmfg.com • Web Site: www.solbergmfg.com

SOLBERG

Filter Silencers and Inlet Filters Maintenance Manual

www.solbergmfg.com

Note: Please read the maintenance instructions given by the OEM for the machinery first. The OEM's manual should be adhered to in order to protect the equipment. Solberg Manufacturing, Inc has made every effort to make sure that these instructions are accurate but is not responsible for any typos, slight variations or for human errors that may occur.

Solberg Manufacturing, Inc., 1151 Ardmore Itasca, IL 60143 USA
Ph: 630.773.1363 Fax: 630.773.0727 Email: sales@solbergmfg.com Web: www.solbergmfg.com
Rev: MMIFS-407

Maintenance Manual

Solberg Air Inlet Filters and Filter Silencers

CONTENTS

Section A

Introduction ..... pg. 3

Section B

General Information

1. Identification of Solberg Filters ..... pg. 3
2. Filtration Rules of Thumb ..... pg. 4
3. Element Specifications. ..... pg. 6
4. Element Cleaning ..... pg. 7

Section C

Procedures

1. Installation ..... pg. 7
2. Disconnecting canister top from base ..... pg. 8
3. Removing element for service/maintenance. ..... pg. 8
4. Securing Element ..... pg. 8
5. Securing canister top to canister base. ..... pg. 9

Section D

Maintenance Recommendations

1. General ..... pg. 9
2. Spare Parts List ..... pg. 10

**For Further Information Please Call: 630-773-1363*

Solberg Manufacturing, Inc., 1151 Ardmore Itasca, IL 60143 USA
Ph: 630.773.1363 Fax: 630.773.0727 Email: sales@solbergmfg.com Web: www.solbergmfg.com

Rev: MMIFS-407

SOLBERG

Section A

INTRODUCTION

The purpose of this manual is instruction on the proper assembly and care of Solberg inlet air filters.

WARNING

This manual must be read and thoroughly understood before using and caring for this air filter. Failure to comply could result in explosion, product/system contamination or personal injury.

This manual should be used as a supplement to the user's understanding of the proper care needed to maintain a safe and dependable air filter. It is the responsibility of the user to interpret and explain all instructions to persons who do not read or understand English BEFORE they are allowed to maintain and use this filter.

This manual should be readily available to all operators responsible for operation and maintenance of the inlet air filters.

We thank you for selecting products from Solberg Manufacturing, Inc. We are confident that our superior filter designs will meet your application requirements.

Section B

GENERAL INFORMATION

1. Identification of Solberg Inlet Air Filters.

All Solberg inlet air filters should have an identification label/nameplate that gives the following information:

Assembly Model #
Replacement Element #

(The exception is OEM supplied units. In this case, please enter the OEM part numbers below.)

Solberg Manufacturing, Inc., 1151 Ardmore Itasca, IL 60143 USA
Ph: 630.773.1363 Fax: 630.773.0727 Email: sales@solbergmfg.com Web: www.solbergmfg.com

Fill in the actual nameplate data from your new Solberg inlet filter(s):

No.	Filter Model Number	Replacement Element	Initial Delta P Readings
1			
2			
3			
4			
5			

Table 1

The model number designates the filter type, the original element configuration and housing connection size. For example, the following part number identifies the filter as being a 'FS' design filter with a 235 element with prefilter and 3" MPT connection size:

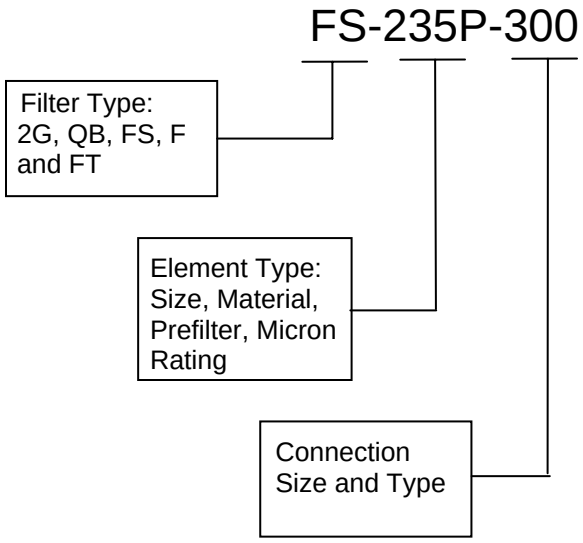

2. Filtration Rules of Thumb

General: For peak output performance from a compressor, blower, vacuum pump, engine, or any other machine that consumes air, one must have clean, unrestricted air. Proper filtration can help stabilize the working environment within rotating equipment even when the external conditions may be quite severe. A critical component in creating the right working conditions is filter sizing. With the properly sized filter, equipment will run smoothly over its entire expected operating life.

A major factor in filtration and filter sizing is air velocity through the filter media. Generally, the slower the velocity of air through a media the higher the filter

Solberg Manufacturing, Inc., 1151 Ardmore Itasca, IL 60143 USA
Ph: 630.773.1363 Fax: 630.773.0727 Email: sales@solbergmfg.com Web: www.solbergmfg.com

efficiency and, conversely, the lower the pressure drop. Therefore, the primary goal in filter sizing is to optimize the velocity of air through the media (sometimes called face velocity).

Rule of Thumb #1: Always begin with the filter cartridge requirements when sizing a filter. Once the appropriate element has been selected then move on to the housing requirements.

Rule of Thumb #2: Always ask or specify a filter based on a micron rating ***with filtration efficiencies***. As an example, stating a requirement for a 1-micron filter is misleading because no efficiency rating has been specified. A 1-micron filter at 95% efficiency may be less efficient than a 5-micron filter at 99% efficiency. For proper air system performance in light and industrial duty environments, a filter with a minimum of 99% filtration efficiency at 5 microns is required.

Rule of Thumb #3: Size your filter correctly by understanding the impact air velocity through a media has on efficiency and pressure drop. Maintain the suggested Air-to-Media ratios listed below based on the external environment listings and Filtration efficiency needs.

Filtration Efficiency Requirements (99%+ efficiency)	**Environmental Conditions**	**Air to Media Ratio**	
Industrial Grade 2-micron **Paper**	Industrial Duty (clean, office/warehouse-like)	30 CFM/ft^2	(51m^3/h)/cm^2
	Severe Duty (workshop, factory-like)	15 CFM/ft^2	(25.5m^3/h)/cm^2
	Extreme Duty (Foundry, Construction-like)	10 CFM/ft^2	(17m^3/h)/cm^2
Industrial Grade 5-micron **Polyester**	Industrial Duty (clean, office/warehouse-like)	50 CFM/ft^2	(85m^3/h)/cm^2
	Severe Duty (workshop, factory-like)	40 CFM/ft^2	(68m^3/h)/cm^2
	Extreme Duty (Foundry, Construction-like)	25 CFM/ft^2	(42.5m^3/h)/cm^2
Industrial Grade 1-micron **Polyester**	Severe Duty (Foundry, Construction-like)	10 CFM/ft^2	(17m^3/h)/cm^2
Industrial Grade 0.3-micron **HEPA** Glass @ 99.97% Efficiency	Industrial Duty (Pre-filtered Applications)	10 CFM/ft^2	(17m^3/h)/cm^2
	Severe Duty (workshop, factory-like)	7 CFM/ft^2	(12m^3/h)/cm^2
	Extreme Duty (Foundry, Construction-like)	5 CFM/ft^2	(8.5m^3/h)/cm^2

Table 2

Rule of Thumb #4: Pressure drop is also caused by the dirt holding capacity of the element. As the element fills up with dirt, the pressure drop increases. It is important to document the pressure drop across a given filter when it is new and then clean or replace it when the pressure drop increases by 10” to 15” / 250-280mm H_2O over the original reading.

Rule of Thumb #5: The inlet connection greatly influences the overall pressure drop of the filter system. To minimize the restriction contributed by an inlet filter, a velocity of 6,000 ft/min (10200m^3/h) or less is suggested through the outlet pipe. The table below lists the suggested flows based on pipe size:

Pipe Size (inches)	Max Airflow		Pipe Size (inches)	Max Airflow		Pipe Size (inches)	Airflow	
1/4"	6 CFM	10m^3/h	1 ¼"	60 CFM	102m^3/h	6"	1,100 CFM	1870m^3/h
3/8"	8 CFM	14m^3/h	1 ½"	80 CFM	136m^3/h	8"	1,800 CFM	3060m^3/h
1/2"	10 CFM	17m^3/h	2"	135 CFM	230m^3/h	10"	3,300 CFM	5610m^3/h
3/4"	20 CFM	34m^3/h	2 ½"	195 CFM	332m^3/h	12"	4,700 CFM	7990m^3/h
1"	35 CFM	60m^3/h	3"	300 CFM	510m^3/h	14"	6,000 CFM	10200m^3/h
			4"	520 CFM	884m^3/h			
			5"	800 CFM	1360m^3/h			

Table 3 **Note: This information is for general use only. A qualified engineer must properly design each system.*

3. Element Specifications

Temperature Range: -15° to 220°F / -26° to 105°C
Filter Change-Out Differential: 10” to 15” / 250-380mm H_2O Over Initial Delta P

Media	Micron Rating
Standard Paper	99+% @ 2 micron
Standard Polyester	99+% @ 5 micron
“S” Series Wire Mesh	Epoxy Coated Wire Mesh
“Z” Series Polyester	99+% @ 1 micron
“HE” Series HEPA	99.97% @ 0.3 microns
“U” Series Polyester	99+% @ 25 micron
“W” Series Polyester	99+% @ 100 micron
“S2” Series	Stainless Steel Wire Mesh
“AC” & “ACP” Series	N/A
“Y” Series Polypropylene	99+% @ 5 micron

Table 4

Solberg Manufacturing, Inc., 1151 Ardmore Itasca, IL 60143 USA
Ph: 630.773.1363 Fax: 630.773.0727 Email: sales@solbergmfg.com Web: www.solbergmfg.com

Temperature Range: -15° to 385°F / -26° to 196°C
Filter Change-Out Differential**:** 10” to 15”/ 250-380mm H_2O Over Initial Delta P

Media	Micron Rating
“MX” & “MXD” Series – Nomex Cloth	99+% @ 5 micron

Table 5

4. Element Cleaning

Some types of Solberg inlet filter elements can be cleaned and reused. However, damage can occur to an element during cleaning so it is imperative that care is taken during disassembly, cleaning and re-assembly. Damaged elements can allow particulate bypass which will damage rotating equipment.

A. ***Polyester Element***: The polyester element may be washed in warm soapy water, vacuumed, gently blown out or replaced. The element should be dry before reinstallation.
B. ***Paper Element***: The paper element may be lightly blown with low pressure air. It is disposable and in most cases should be replaced with a new element.
C. ***Polyurethane Prefilter***: The prefilter may be washed as a sponge or replaced to give the element a longer service life.
D. ***Epoxy Coated Wire Mesh and Stainless Steel Wire Mesh Element***: Cleaning instructions similar to polyester, except mild solvents may be used.
E. ***Activated Carbon Element***: Not cleanable
F. ***Polypropylene Element***: Cleaning instructions similar to polyester
G. ***Nomex Cloth Element***: Cleaning instructions similar to polyester

If you are not confident that the integrity of the element was maintained during cleaning, it is recommended that a new element be installed. Also, spare parts such as gaskets, wingnuts and washers can be supplied upon request.

Section C

PROCEDURES

1. Installation.

A. Maximum operating temperature for most Solberg inlet air filter products is 220°F / 105°C. Temperatures in excess of this could cause damage to elements, media and elastomers. High temperature products are available.

B. Direction of flow is typically from the outside of the element to the inside of the element. Most products have arrows indicating direction of flow on the inlet and outlet ports.

C. Ensure that pipe/flange connections are adequately sealed so the potential for leaks is reduced to a minimum.

2. Disconnecting canister top from canister base.

A. FS-04-06-10 *(or 05-07-11):* Twist top housing to open. Use care to support bottom housing while removing top housing. Fitting damage can occur if fitting is torqued in the wrong direction.

B. Small QB/FS/F/FT*:* Remove weather hood or top plate by loosening hex nut or wing nut and lifting off.

C. Large 2Q/QB/FS/F/FT: Remove cover by loosening hex nut or wing nut and lifting off.

3. Removing element for service/maintenance.

A. Carefully remove retaining hex head/wing-nut and washer over top plate, and then remove element. Note: Model “04-06-10” elements should be free when housing tops are removed.

B. Clean sealing surfaces of housing, top plates and element endcaps so that they are free of dirt or any other particulate.

WARNING

Failure to comply with these instructions may result in system or equipment contamination.

4. Securing Element.

A. Place new or cleaned element evenly on base plate. Be sure element seats properly on base and there is no dirt or particulate present on sealing surfaces. With multiple element stacks place elements in line with base element and ensure elements seat properly.

Solberg Manufacturing, Inc., 1151 Ardmore Itasca, IL 60143 USA
Ph: 630.773.1363 Fax: 630.773.0727 Email: sales@solbergmfg.com Web: www.solbergmfg.com

B. Place top plate (if necessary) on element by centering on tap bolt.

C. Secure washer and wing nut to end cap (or top plate) and tap bolt. Element must be tightly secured. Note: Do NOT over tighten!

WARNING

Defective installation may cause system or pump contamination. Use only genuine Solberg replacement parts.

5. Securing canister top to canister base.

A. Make sure all surfaces are free from dust and other particulate.

B. Small QB/FS/F/FT: Replace top plate and/or weather hood if necessary. Feed threaded rod into corresponding bolthole and tighten. Note: Do NOT over tighten!

C. Large 2G/QB/FS/F/FT: Replace cover. Feed threaded rod into corresponding bolt hole(s) and tighten. Note: Do NOT over tighten!

D. FS-04-06-10 (or 05-07-11): Reassemble top housing to bottom housing by aligning tabs and turning into place.

Section D

MAINTENANCE RECOMMENDATIONS

1. Pressure drop readings are recommended to have an effective air filter. Always document initial pressure drop during start-up when element is clean. Replacement cartridge is needed when system experiences 10” to 15” / 250-380mm H^2O above drop above the initial reading. Refer to page 4 for initial values.

2. Always check replacement cartridge gaskets to insure they are adhered uniformly along the end caps during handling. If not, contact Solberg Manufacturing, Inc. immediately. Do not modify or change!

Solberg Manufacturing, Inc., 1151 Ardmore Itasca, IL 60143 USA
Ph: 630.773.1363 Fax: 630.773.0727 Email: sales@solbergmfg.com Web: www.solbergmfg.com

3. Always check inlets/outlets, element base and its components when replacing element to insure cleanliness. Wipe clean if necessary.

4. Operate only when a proper seal exists.

SPARE PARTS LIST:

2G/QB/FS Series

Parent Model 2G/QB-Element-Connection	Prefilter Model	Housing Weatherhood/Top for FS Series Model No.	Housing Weatherhood/Top for 2G/QB Series Model No.	Element Top Plate Model No.	Wingnut(s)/ Lock Hex Nut(s) Model No.	Washer(s) Model No.
Model-15/14-xxx	PF14	WH6X2	N/A	N/A	WN25X20	WR25X20
Model-19/18-xxx	PF18	WH6X5	QB6X5	N/A	WN25X20	WR25X20
Model-31/30-xxx	PF30	WH10X5	QB10X5	N/A	WN25X20	WR25X20
Model-231/230-xxx	PF230	WH10X10	QB10X10	N/A	WN38X16	WR38X16
Model-235/234-xxx	PF234	WH16X10	QB16X10	N/A	WN38X16	WR38X16
Model-245/244-xxx	PF244	WH16X10	QB16X10	N/A	WN38X16	WR38X16
Model-275/274-xxx	PF274	WH16X10	QB16X10	N/A	WN38X16	WR38X16
Model-375/374-xxx	PF374	T16000625	T16000625	T12000625	LHN50X13	WR50X13
Model-377/376-xxx	PF376	T22000625	T22000625	T14750625	LHN50X13	WR50X13
Model-385/384-xxx	PF384	T28000625	T28000625	T19750625	LHN50X13	WR50X13
Model-384(2)-xxx	PF384(2)	T28000625	T28000625	T19750625	LHN50X13	WR50X13
Model-485/484-xxx	PF484	T28000625	T28000625	T19750625	LHN50X13	WR50X13
Model-485(2)/484(2)-xxx	PF484(2)	T28000625	T28000625	T19750625	LHN50X13	WR50X13
Model-685-xxx	PF684	T28000625	T28000625	T19750625	LHN50X13	WR50X13

F/FT Series

Parent Model F/FT-Element-Connection	Prefilter Model	Weatherhood/Top for F Series Model No.	Element Top for F Series Model No.	Top for FT Series Model No.	Wingnut(s)/ Lock Hex Nut(s) Model No.	Washer(s) Model No.
Model-15/14-xxx	PF14	WH6X2	N/A	T4500312	WN25X20	WR25X20
Model-19/18-xxx	PF18	WH6X5	N/A	T4500312	WN25X20	WR25X20
Model-31/30-xxx	PF30	WH7.625X5	N/A	T6000312	WN25X20	WR25X20
Model-231/230-xxx	PF230	WH10X10	N/A	T6000312	WN38X16	WR38X16
Model-235/234-xxx	PF234	WH10X10	N/A	T8000437	WN38X16	WR38X16
Model-245/244-xxx	PF244	WH16X10	N/A	T1000437	WN38X16	WR38X16
Model-275/274-xxx	PF274	WH16X10	N/A	T12000437	WN38X16	WR38X16
Model-375/374-xxx	PF374	WH16X16	N/A	T12000625	LHN50X13	WR50X13
Model-377/376-xxx	PF376	WH22.5X15	N/A	T14750625	LHN50X13	WR50X13
Model-385/384-xxx	PF384	WH28X15	N/A	T19750625	LHN50X13	WR50X13
Model-384(2)-xxx	PF384(2)	T28000625	T19750625	T19750625	LHN50X13	WR50X13
Model-485/484-xxx	PF484	WH28X24	N/A	T19750625	LHN50X13	WR50X13
Model-485(2)/484(2)-xxx	PF484(2)	T28000625	T19750625	T19750625	LHN50X13	WR50X13
Model-685-xxx	PF684	T28000625	T19750625	T19750625	LHN50X13	WR50X13

*Note: Spare parts are for standard products. See page 4 for replacement element.

Solberg Manufacturing, Inc., 1151 Ardmore Itasca, IL 60143 USA
Ph: 630.773.1363 Fax: 630.773.0727 Email: sales@solbergmfg.com Web: www.solbergmfg.com

Models 215V ~~and 337~~

Model 215V is Non-code Vacuum and Model 337 is ASME Section VIII, Air/Gas Vacuum, 'UV' National Board Certified, Safety Valves

KUNKLE

Features

- **Large nozzle design** provides high capacity.
- **Flat bronze valve seats are lapped** for optimum performance.
- **Warn ring offers easy adjustability** for precise opening with minimum pre-open or simmer and exact blowdown control.
- **Pivot between disc and spring** corrects misalignment and compensates for spring side thrust.

Model Descriptions

- **Model 337 has 'pull-ring' lift device** for easy manual testing.
- **Every valve is 100% tested/inspected** for pressure setting, blowdown and leakage.
- **All adjustments are factory sealed** to prevent tampering or disassembly.

Option

- SS trim. (nozzle and disc) (Variation 03)

Applications

- Protection of low to medium pressure high volume blowers, compressors and pneumatic conveying systems.
- Bulk hauling trailers/equipment.
- Light gauge tanks.
- Protection of high volume vacuum pumps and conveying systems.

Vacuum Limits

Model 215V:
2-inch HG
to 29-inch HG
[67.7 to 982 mbarg]
-20° to 406°F [-29° to 208°C]

Pressure and Temperature Limits

Model 337:
1 to 60 psig [0.07 to 4.1 barg]
-20° to 406°F [-29° to 208°C]

Tyco reserves the right to change product design and specifications without notice. Copyright © 2002 by Tyco International Ltd.

Models 215V ~~and 337~~

Parts and Materials

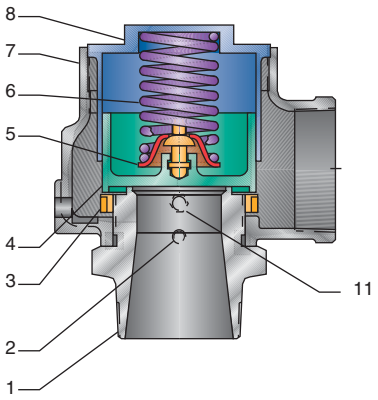

Model 215V

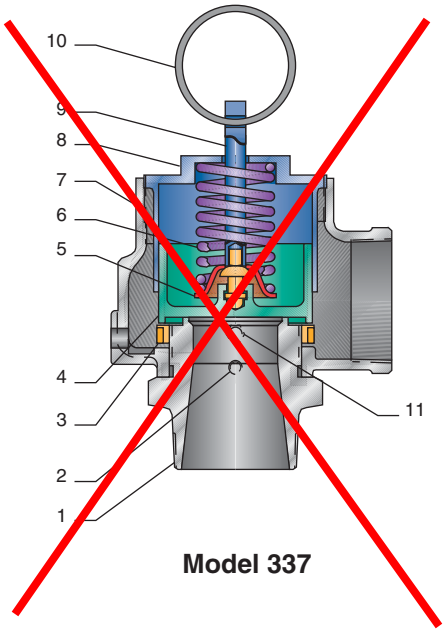

Model 337

Models 215V and 337

No.	Part Name	215V	337
1	Nozzle[1]	Bronze, SB62	Bronze, SB62
2	Set Screw	Steel A108-1018 Brass Plated	Steel A108-1018 Brass Plated
3	Regulator Ring	Bronze B584 Alloy 84400	Bronze B584-C84400
4	Disc[1]	Bronze B584 Alloy 84400	Bronze B584-C84400
5	Spring Step	Steel A-109 Coated[3]	Steel A109 Coated[3]
6	Spring	SS, A313 TY 302	SS A313-302
7	Body	Cast Iron, Zinc Plated, B633	Iron A-126, CL A or B
8	Compression Screw	Bronze, B-584 Alloy 84400	Bronze B584-C84400
9	Stem[2]	N/A	Brass B16
10	Lift Ring[2]	N/A	SS A313-302
11	Regulator Ring Set Screw	N/A	Brass B16

Notes

1. Disc and nozzle available in SSA-479 TY 316.
2. Stem and lift ring available on Model 337 only.
3. Corrosion preventative coating.

Specifications

Size Inlet and Outlet	Dimensions, in [mm] A	B	C 215V	C 337	Weight lb [kg]
2" [50.8 mm]	3¼ [82.5]	3 [76.2]	6½ [165.1]	7 [177.8]	8 [3.6]
~~2½" [63.5 mm]~~	~~3¾ [95.2]~~	~~3½ [88.9]~~	~~7⅝ [194.6]~~	~~8 [203.2]~~	~~12 [5.4]~~
3" [76.2 mm]	4¼ [107.9]	4 [101.6]	8½ [215.9]	~~8 [203.2]~~	20 [4.1]

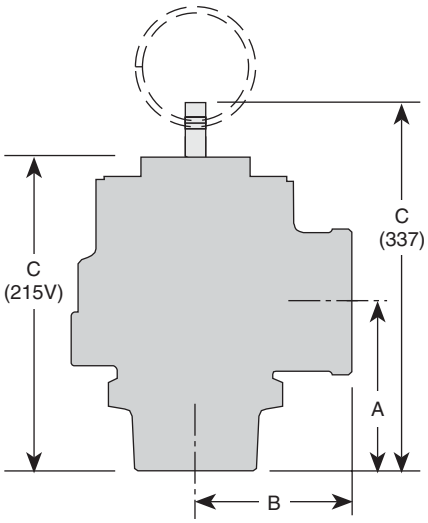

Model 337

Tyco reserves the right to change product design and specifications without notice. Copyright © 2002 by Tyco International Ltd.

Models 215V ~~and 337~~

Model 215V

Non-code Vacuum Air (SCFM) - Flow Coefficient

Relief Set (in, HG)	Valve Inlet and Outlet Size 2" Orifice Area, in² 1.84	2½" Orifice Area, in² 2.79	3" Orifice Area, in² 4.04
2	229	347	503
5	338	512	742
10	415	630	912
15	426	646	936
20	426	646	936

Non-code Vacuum Air [Metric, Nm³/h]

Relief Set [mbarg]	Valve Inlet and Outlet Size 5.08 cm Orifice Area [11.86 cm²]	6.35 cm Orifice Area [17.97 cm²]	7.62 cm Orifice Area [26.05 cm²]
50	328	498	722
100	450	682	988
150	533	807	1170
200	593	899	1303
250	638	966	1400
300	669	1014	1470
350	690	1046	1516
400	701	1062	1540
450	704	1067	1546
500	704	1067	1546
550	704	1067	1546
600	704	1067	1546
650	704	1067	1546
700	704	1067	1546
750	704	1067	1546

Model 337

Non-code[1] and ASME Section VIII Air (English, SCFM)

Set Pressure (psig)	Valve Inlet and Outlet Size 2"	2½"	3"
1	240	364	527
5	531	805	1166
10	741	1124	1628
15	948	1436	2081
20	1092	1656	2399
25	1237	1875	2718
30	1382	2095	3036
35	1542	2337	3386
40	1701	2578	3736
45	1860	2820	4086
50	2020	3061	4436
55	2179	3303	4786
60	2338	3544	5136

Note

1. No code stamp or 'NB' on nameplate below 15 psig set.

Non-code[1] and ASME Section VIII Air [Metric, Nm³/h]

Set Pressure [barg]	Valve Inlet and Outlet Size 50 mm	63 mm	80 mm
0.5	1049	1589	2303
1.0	1457	2208	3200
1.5	1888	2861	4147
2.0	2235	3387	4910
2.5	2613	3959	5739
3.0	2995	4538	6579
3.5	3377	5117	7418
4.0	3760	5696	8258

Note

1. No code stamp or 'NB' on nameplate below 1.1 barg set.

Tyco reserves the right to change product design and specifications without notice. Copyright © 2002 by Tyco International Ltd.

Models 215V and 337

Model Number/Order Guide

Model No: 215V-K01AQE0006

Model Number Position	1	2	3	4	5	6	7	8	9	10	11	12	13	14	15
Example	2	1	5	V	—	H	0	1	A	Q	E	0	0	5	0

Model
215V
~~337~~

Inlet Size
H - 2-inch [50.8 mm]
~~J - 2½-inch [63.5 mm]~~
K - 3-inch [76.2 mm]

Variation (01 through 99)
01 - Bronze Disc and Nozzle
~~02 - SS Disc and Nozzle~~
60 - BSP Connections

Design Revision
Indicates non-interchangeable revision. Current Design is at Revision 'A'

Valve Service
~~K - Air ASME Section VIII (Model 337 only)~~
Q - Vacuum (Model 215V only)
~~N - Non-code Air/Gas (Model 337 only)~~

Spring Material
E - SS Type 316
~~M - SS (26 psi thru 60 psi set) Type 17-7~~

Set Pressure
~~Model 337, 1 psig [9.7 barg] (0001) through 60 psig [4.1 barg] (0060)~~
Model 215V, 2-inch HG [68 mbarg] (0002) through 29-inch HG [982 mbarg] (0029) vacuum

Facility Phone: 828-669-3700

tyco / Valves & Controls

www.kunklevalve.com

The data presented in this bulletin is for general information only. Manufacturer is not responsible for acceptability of these products in relation to system requirements. Patents and Patents Pending in U.S. and foreign countries. All rights reserved. Printed in U.S.A. Tyco reserves the right to change product design and specifications without notice. © Copyright 2002.

Models ~~215V and~~ 337

Model 215V is Non-code Vacuum and Model 337 is ASME Section VIII, Air/Gas Vacuum, 'UV' National Board Certified, Safety Valves

KUNKLE

Features

- **Large nozzle design** provides high capacity.
- **Flat bronze valve seats are lapped** for optimum performance.
- **Warn ring offers easy adjustability** for precise opening with minimum pre-open or simmer and exact blowdown control.
- **Pivot between disc and spring** corrects misalignment and compensates for spring side thrust.

Model Descriptions

- **Model 337 has 'pull-ring' lift device** for easy manual testing.
- **Every valve is 100% tested/inspected** for pressure setting, blowdown and leakage.
- **All adjustments are factory sealed** to prevent tampering or disassembly.

Option

- SS trim. (nozzle and disc) (Variation 03)

Applications

- Protection of low to medium pressure high volume blowers, compressors and pneumatic conveying systems.
- Bulk hauling trailers/equipment.
- Light gauge tanks.
- Protection of high volume vacuum pumps and conveying systems.

Vacuum Limits

Model 215V:
2-inch HG
to 29-inch HG
[67.7 to 982 mbarg]
-20° to 406°F [-29° to 208°C]

Pressure and Temperature Limits

Model 337:
1 to 60 psig [0.07 to 4.1 barg]
-20° to 406°F [-29° to 208°C]

Tyco reserves the right to change product design and specifications without notice. Copyright © 2002 by Tyco International Ltd.

KUKMC-0383-US-0207

Models ~~215V and~~ 337

Parts and Materials

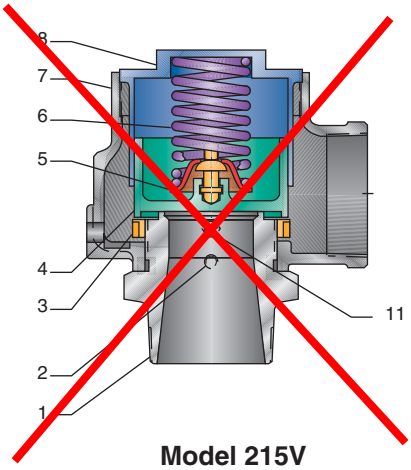

Model 215V

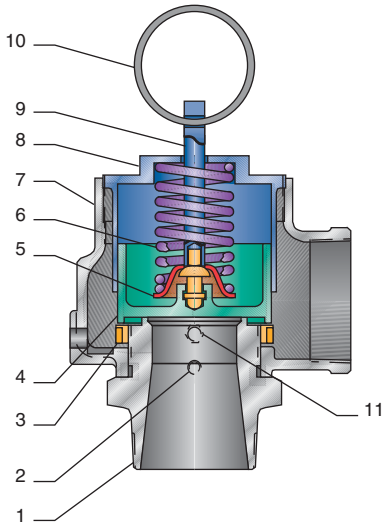

Model 337

Models 215V and 337			
No.	**Part Name**	**215V**	**337**
1	Nozzle[1]	Bronze, SB62	Bronze, SB62
2	Set Screw	Steel A108-1018 Brass Plated	Steel A108-1018 Brass Plated
3	Regulator Ring	Bronze B584 Alloy 84400	Bronze B584-C84400
4	Disc[1]	Bronze B584 Alloy 84400	Bronze B584-C84400
5	Spring Step	Steel A-109 Coated[3]	Steel A109 Coated[3]
6	Spring	SS, A313 Type 302	SS A313-302
7	Body	Cast Iron, Zinc Plated, B633	Iron A-126, CL A or B
8	Compression Screw	Bronze, B-584 Alloy 84400	Bronze, B584-C84400
9	Stem[2]	N/A	Brass B16
10	Lift Ring[2]	N/A	SS A313-302
11	Regulator Ring Set Screw	N/A	Brass B16

Notes

1. Disc and nozzle available in SSA-479 TY 316.
2. Stem and lift ring available on Model 337 only.
3. Corrosion preventative coating.

Specifications

Size Inlet and Outlet	Dimensions, in [mm] A	B	C 215V	C 337	Weight lb [kg]
2” [50.8 mm]	3 1/4 [82.5]	3 [76.2]	6 1/2 [165.1]	7 [177.8]	8 [3.6]
~~2 1/2” [63.5 mm]~~	~~3 3/4 [95.2]~~	~~3 1/2 [88.9]~~	~~7 5/8 [194.6]~~	~~8 [203.2]~~	~~12 [5.4]~~
3” [76.2 mm]	4 1/4 [107.9]	4 [101.6]	~~8 1/2 [215.9]~~	9 [228.6]	20 [4.1]

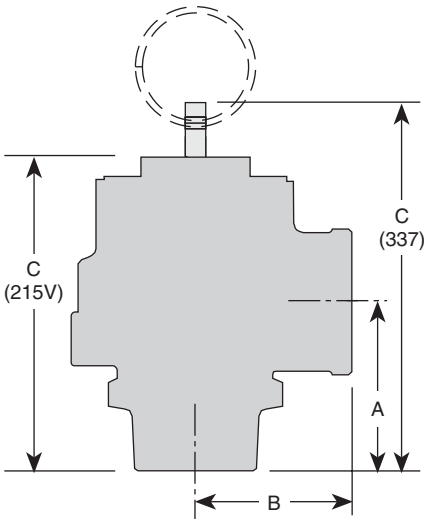

Model 337

Tyco reserves the right to change product design and specifications without notice. Copyright © 2002 by Tyco International Ltd.

Models ~~215V and~~ 337

Model 215V

Non-code Vacuum Air (SCFM) - Flow Coefficient

Relief Set (in, HG)	Valve Inlet and Outlet Size 2" Orifice Area, in² 1.84	2½" Orifice Area, in² 2.79	3" Orifice Area, in² 4.04
2	229	347	503
5	338	512	742
10	415	630	912
15	426	646	936
20	426	646	936

Non-code Vacuum Air [Metric, Nm³/h]

Relief Set [mbarg]	Valve Inlet and Outlet Size 5.08 cm Orifice Area [11.86 cm²]	6.35 cm Orifice Area [17.97 cm²]	7.62 cm Orifice Area [26.05 cm²]
50	328	498	722
100	450	682	988
150	533	807	1170
200	593	899	1303
250	638	966	1400
300	669	1014	1470
350	690	1046	1516
400	701	1062	1540
450	704	1067	1546
500	704	1067	1546
550	704	1067	1546
600	704	1067	1546
650	704	1067	1546
700	704	1067	1546
750	704	1067	1546

Model 337

Non-code[1] and ASME Section VIII Air (English, SCFM)

Set Pressure (psig)	Valve Inlet and Outlet Size 2"	2½"	3"
1	240	364	527
5	551	805	1166
10	741	1124	1628
15	948	1436	2081
20	1092	1656	2399
25	1237	1875	2718
30	1382	2095	3036
35	1542	2337	3386
40	1701	2578	3736
45	1860	2820	4086
50	2020	3061	4436
55	2179	3303	4786
60	2338	3544	5136

Note

1. No code stamp or 'NB' on nameplate below 15 psig set.

Non-code[1] and ASME Section VIII Air [Metric, Nm³/h]

Set Pressure [barg]	Valve Inlet and Outlet Size 50 mm	63 mm	80 mm
0.5	1049	1589	2303
1.0	1457	2208	3200
1.5	1888	2861	4147
2.0	2235	3387	4910
2.5	2613	3959	5739
3.0	2995	4538	6579
3.5	3377	5117	7418
4.0	3760	5696	8258

Note

1. No code stamp or 'NB' on nameplate below 1.1 barg set.

Tyco reserves the right to change product design and specifications without notice. Copyright © 2002 by Tyco International Ltd.

Models 215V and 337

Model No: 0337-K01ANE0001

Model Number/Order Guide

Model Number Position	1	2	3	4	5	6	7	8	9	10	11	12	13	14	15
Example	2	1	5	V	—	H	0	1	A	Q	E	0	0	5	0

Model
~~215V~~
0337

Inlet Size
H - 2-inch [50.8 mm]
~~J - 2½-inch [63.5 mm]~~
K - 3-inch [76.2 mm]

Variation (01 through 99)
01 - Bronze Disc and Nozzle
~~02 - SS Disc and Nozzle~~
60 - BSP Connections

Design Revision
Indicates non-interchangeable revision. Current Design is at Revision 'A'

Valve Service
K - Air ASME Section VIII (Model 337 only)
~~Q - Vacuum (Model 215V only)~~
N - Non-code Air/Gas (Model 337 only)

Spring Material
E - SS Type 316
~~M - SS (26 psi thru 60 psi set) Type 17-7~~

Set Pressure
Model 337, 1 psig [0.7 barg] (0001) through 60 psig [4.1 barg] (0060)
~~Model 215V, 2-inch HG [68 mbarg] (0002) through 29-inch HG [982 mbarg] (0029) vacuum~~

Facility Phone: 828-669-3700

tyco / Valves & Controls

www.kunklevalve.com

The data presented in this bulletin is for general information only. Manufacturer is not responsible for acceptability of these products in relation to system requirements. Patents and Patents Pending in U.S. and foreign countries. All rights reserved. Printed in U.S.A. Tyco reserves the right to change product design and specifications without notice. © Copyright 2002.

KUNKLE PRESSURE RELIEF VALVES

Installation and Operating Instructions

Pre-Installation Handling

This pressure relief valve is designed to protect equipment from overpressure. The valve should be handled with care, not subjected to heavy shock loads, and protected to prevent contamination from getting inside. It should be installed correctly per A.S.M.E. Boiler & Pressure Vessel Code requirements. Failure to do so could result in property damage or serious injury to personnel. When hoisting the valve into position for installation, care should be exercised so that lifting straps do not contact the valve lift lever.

Installation

Always wear proper safety equipment, including safety glasses and ear protection.

1. Mount the valve in a vertical position so that the valve body is self-draining. If a body drain port is provided, make sure it is open when required by the ASME code. Do not plug any bonnet vent openings. The inlet piping should be as short as possible, with no elbows, and equal to or greater than the size of the pressure relief valve inlet connection. This will help to limit the inlet pressure drop to 3% or less when the valve is relieving.

2. When discharge piping is connected to valve outlet, make sure it is self draining if a body drain port is not used. The valve should not be connected to any discharge pipe that contains pressure before the valve opens or to any pipe where the pressure build-up is greater than 10% of the set pressure when the valve is open and relieving.

   Discharge piping, other than a short tailpipe, must be supported. For steam service, a drip pan elbow or flexible connection between the valve and the pipe should be used to prevent excessive pipe stress, due to thermal expansion, from being imposed on the valve body.

3. For threaded valves, to prevent sealing compound from entering and damaging the valve, apply a small amount of pipe thread sealing compound to external threads only. Do not put any sealing compound on the first thread or on any internal threads. To do so may cause the sealing compound to enter the valve and cause seat leakage.

   Do not use the valve body or bonnet for installing the valve in threaded connections. Use the wrench flats provided to tighten the valve to the connecting pipe, and do not overtighten. To do so may cause valve leakage.

4. For flanged valves, use new gaskets and tighten the mounting studs evenly.

Operation

1. Maintain a system operating pressure at least 5 psig or 10% below the set pressure of the valve, whichever is greater. Operating too close to the valve set pressure will cause seat leakage and will shorten the time between valve maintenance.

2. Do not use the safety valve as a control valve to regulate system operating pressure. Excessive operation will cause the seat to leak and will require more frequent valve maintenance.

3. ASME Section I and VIII valves equipped with lift levers are designed to be operated only when the system pressure is 75% of set pressure or greater. ASME Section IV valves may be operated at any set pressure. When hand operating the valve, hold it open long enough to purge any foreign matter from the seat area. If a cable or wire is attached to the lift lever for remote actuation, make sure the direction of pull is the same as it would be if the lever were pulled directly by hand.

Maintenance

Maintenance should be performed on a regular basis. An initial inspection interval of 12 months is recommended. Depending on the service conditions and the condition of the valve, the inspection interval may be decreased or increased. Use only Kunkle parts for repair. Depending on the local jurisdictional requirements where the valve is installed, repairs may have to be made by a repair facility holding a VR stamp.

WARNING!

Removal of the seal wires or any attempt to adjust, repair or modify this product by non-qualified or non-authorized persons voids the product guarantee and may cause serious damage to equipment, personal injury, and death. Kunkle Valve is not liable for any damage resulting from misuse or misapplication of its products.

Kunkle Valve Division

Phone: 828-669-5515 953 Old US 70, Black Mountain, NC 28711 Fax: 828-669-4017

Rev B 01/14/2002

Butterfly Valves

Pneumatic Valve Actuators

DelVal Butterfly Valves

Leading the Industry with Innovation by Design

DelTech Controls is pleased to offer top-of-the-line products in pipeline flow control. The DelVal Series 50 (wafer body) and Series 52 (lug body) Butterfly Valves have been developed with extensive application, design and manufacturing expertise. These products are produced by employing modern manufacturing practices under a robust quality assurance system. These practices ensure consistent product quality and dependable performance. The DelVal Series 50/52 Butterfly Valves have been designed to include state-of-the-art features that are described in this bulletin.

Features

Stem connection available in standard DelVal sizes or optional sizes to match standard secondary top plate drilling.

Top plate double drilled to fit ISO 5211 dimensions and standard secondary bolt circle dimensions. All handles, gear operators and pneumatic DelTorq actuators are designed to mount directly to DelVal Valves.

Nylon P A 12 coated disc option ensures excellent cor rosion resistance to several chemical media. The har non-porous sintered polymer has v low hygroscopicity and is suitable use in drinking water and n alcoholic foodstuffs.

One piece stem with close tolerance double D drive eliminates the need for disc screws or taper pins.

Double O-rings are molded in both upper and lower journals providing a superior secondary seal.

Unique "Center-Lock" seat design virtually eliminates any seat movement during the seating and un-seating of the disc.

Heavy duty square-grooved seat design with molded O-ring seals to serve as flange gaskets. EPDM and Buna-N seats are peroxide cured to yield the best elastic properties of the elastomer.

"Center-Lock" seat design

Unique stem retention system to provide blow-out proof stem and easy assembly and disassembly of valve.

Heavy duty acetal bushing absorbs the forces acting on the stem/disc assembly due to line pressure.

Bi-directional 'U' cup stem se

Heavy duty one-piece body with extended neck for 2" piping insulation. Standard coating is two coats of hard, Zinc-rich epoxy for excellent corrosion resistance.

Two flange locating holes for sizes up to 12" and four flange locating holes from size 14" to 24" for easy alignment of during valve installation. They meet ANSI #125 /150 or other world drilling standards.

High strength disc with hand polished disc edge and hubs.

Precision machined radius on the upper and lower disc hubs is pressed against upper and lower seat sealing faces for achieving primary sealing between disc and seat.

Engineering

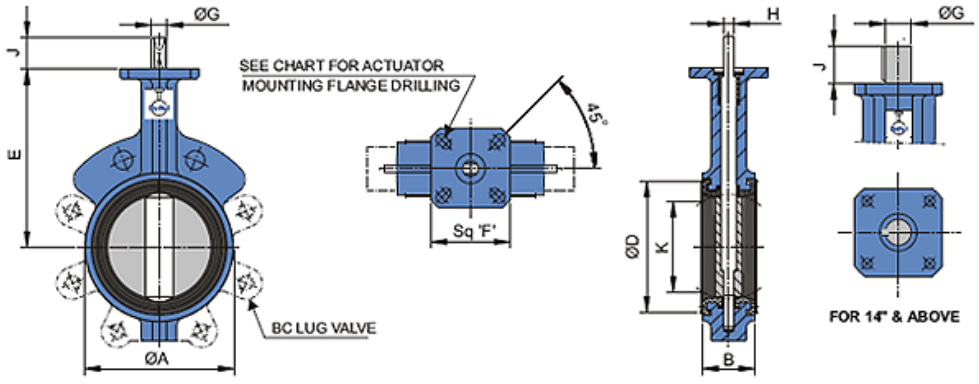

Valve Size		ØA	*B	ØD	E	Sq'F'	Top Plate Drilling			ØG	H	J	Key Size	K	Lug Bolting Data			Weight in Lbs.	
Inch	DN						BC	No. of Holes	Hole Dia						BC	No.of Holes	Threads UNC-2B	Wafer (Series 50)	Lug (Series 52)
2	50	3.46	1.69	2.99	5.51	3.15	2.76/3.25	4	0.39/0.438	0.55	0.39	1.25	---	1.32	4.75	4	5/8-11	5.07	6.79
2 ½	65	4.02	1.81	3.54	5.98	3.15	2.76/3.25	4	0.39/0.438	0.55	0.39	1.25	---	2.05	5.50	4	5/8-11	5.80	7.91
3	80	4.72	1.81	4.17	6.30	3.15	2.76/3.25	4	0.39/0.438	0.55	0.39	1.25	---	2.70	6.00	4	5/8-11	6.83	8.92
4	100	5.91	2.06	5.20	7.09	3.15	2.76/3.25	4	0.39/0.438	0.63	0.43	1.25	---	3.61	7.50	8	5/8-11	10.87	16.37
5	125	6.89	2.19	6.30	7.56	3.15	2.76/3.25	4	0.39/0.438	0.75	0.51	1.25	---	4.62	8.50	8	3/4-10	13.91	21.56
6	150	7.87	2.19	7.09	8.07	3.15	2.76/3.25	4	0.39/0.438	0.75	0.51	1.25	---	5.50	9.50	8	3/4-10	19.31	25.00
8	200	10.04	2.38	9.45	9.49	4.72	2.76/4.92/5.00	4	0.39/0.55/0.563	0.87	0.63	1.25	---	7.39	11.75	8	3/4-10	28.00	37.92
10	250	12.21	2.56	11.50	10.75	4.72	4.92/5.00	4	0.55/0.563	1.18	0.87	2.00	---	9.61	14.25	12	7/8-9	44.95	51.76
12	300	14.17	3.06	13.58	12.24	4.72	4.92/5.00	4	0.55/0.563	1.18	0.87	2.00	---	11.12	17.00	12	7/8-9	60.85	92.26
14	350	16.34	3.06	15.28	13.62	4.72	4.92/5.00	4	0.55/0.563	1.38	---	2.00	0.39x0.39	12.92	18.75	12	1-8	87.96	122.80
16	400	18.58	4.00	17.40	14.76	4.72	4.92	4	0.55	1.38	---	2.00	0.39x0.39	14.80	21.25	16	1-8	130.51	184.31
18	450	20.67	4.50	19.49	15.98	6.70	6.50	4	0.83	1.97	---	2.50	0.39x0.47	16.59	22.75	16	11/8 -7	194.45	239.42
20	500	22.83	5.00	21.57	17.24	6.70	6.50	4	0.83	1.97	---	2.50	0.39x0.47	18.61	25.00	20	11/8 -7	236.78	306.88
24	600	27.24	6.06	25.75	19.49	Ø8.27	6.50	4	0.83	2.50	---	4.00	0.62x0.62	22.55	29.50	20	11/4 -7	385.81	477.08

Valve Size		ØA	*B	ØD	E	Sq'F'	Top Plate Drilling			ØG	H	J	Key Size	K	Lug Bolting Data			Weight in Kg.	
Inch	DN						BC	No. of Holes	Hole Dia						BC	No.of Holes	Threads UNC-2B	Wafer (Series 50)	Lug (Series 52)
2	50	88	43	76	140	80	70/82.5	4	10/11	14	10	32	---	33.5	120.7	4	5/8-11	2.30	3.08
2 ½	65	102	46	90	152	80	70/82.5	4	10/11	14	10	32	---	52.1	139.7	4	5/8-11	2.63	3.59
3	80	120	46	106	160	80	70/82.5	4	10/11	14	10	32	---	68.5	152.4	4	5/8-11	3.10	4.05
4	100	150	52	132	180	80	70/82.5	4	10/11	16	11	32	---	91.7	190.5	8	5/8-11	4.93	7.42
5	125	175	56	160	192	80	70/82.5	4	10/11	19	13	32	---	117.3	215.9	8	3/4-10	6.31	9.78
6	150	200	60	180	200	80	70/82.5	4	10/11	19	13	32	---	139.7	241.3	8	3/4-10	7.40	11.30
8	200	255	60	240	241	120	70/125/127	4	10/14/14.3	22	16	32	---	187.6	298.5	8	3/4-10	12.70	17.20
10	250	315	68	292	276	120	125/127	4	14/14.3	30	22	51	---	239.4	362.0	12	7/8-9	20.60	29.00
12	300	360	78	345	311	120	125/127	4	14/14.3	30	22	51	---	282.4	431.8	12	7/8-9	27.60	41.85
14	350	415	78	388	346	120	125/127	4	14/14.3	35	---	51	10x10	328.3	476.2	12	1-8	39.90	55.70
16	400	472	102	442	375	120	125	4	14	35	---	51	10x10	375.8	539.7	16	1-8	59.20	83.60
18	450	525	114	495	406	170	165	4	21	50	---	64	10x12	421.4	577.8	16	1 1/8-7	88.20	108.60
20	500	580	127	548	438	170	165	4	21	50	---	64	10x12	472.6	635.0	20	1 1/8-7	107.40	139.20
24	600	692	154	654	495	Ø210	165	4	21	63.5	---	102	15.88x15.88	572.7	749.3	20	1 1/4-7	175.00	216.40

*Face to face dimension "B " generally confor ming to API 609 Categor y A/BS EN 558-1 Series 20/ISO 5752 Series 20 / MS S SP 67 / ASME B 16.10

Valve Size		2"	2.5"	3"	4"	5"	6"	8"	10"	12"	14"	15"	18"	20"	24"
Full Rated Pressure Valve ¡÷P,PSI	50	62	106	115	241	360	484	878	1409	2366	3064	3684	5796	6741	9601
	100	72	124	142	256	393	549	977	1586	2677	3527	4428	7273	8441	12482
	150	80	142	177	271	426	582	1083	1756	2987	3980	5178	8756	10126	15576
	175	91	150	197	279	443	620	1133	1841	3146	---	---	---	---	---
Reduced Disc Dia.¡÷P,PSI	50	62	106	115	133	187	267	623	771	1259	2159	2627	3649	4285	6500
Full Rated Pressure Valve ¡÷P,Bar	3.5	7	12	13	27	41	55	99	159	267	346	416	655	762	1085
	7	8	14	16	29	44	62	110	179	302	398	500	822	954	1410
	10	9	16	20	31	48	66	122	198	337	450	585	989	1144	1760
	12	10	17	22	32	50	70	128	208	355	---	---	---	---	---
Reduced Disc Dia.¡÷P,Bar	3.5	7	12	13	15	21	30	70	87	142	244	297	412	484	734

Material of Construction

Body **Stem**

• Cast Iron ASTM A126 Class B
• Ductile Iron ASTM A536 Grade 65-45-12
• Carbon steel ASTM A 216 WCB

Disc

• Nylon 12 Coated Ductile Iron ASTM A536 Grade 65-45-12
• DI ASTM A 536 Grade 65-45-12 + Aroxy coated
• 316 Stainless Steel ASTM A351 Grade CF8
• 410 Stainless Steel ASTM A479 Type 410
• 316 Stainless Steel ASTM A276 Type 316
• Carbon steel BS 970

Seat

• EPDM - Food Grade
• Buna-N - Food Grade
• White Buna-N - Food Grade
• Viton / FKM - Food Grade
• Silicone

General Design and Manufacturing Standard: API 609 / BS EN -593

Seat Temperature Range

Seat Type	Temperature Range	
	Min	Max
EPDM	-13° F(-25° C)	248° F(120° C)
BUNA-A	-13° F(-25° C)	212° F(100° C)
White BUNA-A	-13° F(-25° C)	212° F(100° C)
Viton/FKM	-23° F(-50° C)	356° F(200° C)
Silicone	-58° F(-50° C)	356° F(180° C)

*Vitonis registered trademark of E.I. DuPont

Testing Standard :

API 598 / BS EN 12266-1

Pressure Rating

For bi-directional bubble tight shut off and fu vacuum ser vice with disc in the closed posit

INCH	DN	PSIG	BARG
2"-12"	50-300	230	16
2"-12"	50-300	175	12
2"-24"	50-300	150	10
2"-24"	350-600	50	3.5

Dead-End Service : Without a downstream flange installed, the dead-end pressure ratings are equal to the values stated above.

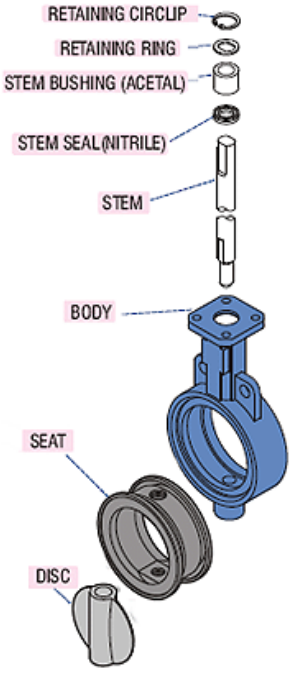

Operators

Valves up to size 12" can be supplied with lever handles for manual operation. Optional accessories for hand-lever operation can be provided for various flow control requirements. Pad locking can also be provided for preventing unauthorized operation

Valves up to size 24" can be direct mounted with gear operators for manual operation. Gear operators can also be attached with chainwheel operators for opening or closing valves located on pipelines at high elevations.

All valves can be direct mounted with pneumatic actuators or electric actuators and accessories for complete automation options such as fail open/close & positioner controlled. Valves can be mounted with manual overrides.

Copyright ©2008 Delval flow controls pvt.ltd. All rights reserved.¡¡

Butterfly Valves

Pneumatic Valve Actuators

DelVal Butterfly Valves

Leading the Industry with Innovation by Design

DelTech Controls is pleased to offer top-of-the-line products in pipeline flow control. The DelVal Series 50 (wafer body) and Series 52 (lug body) Butterfly Valves have been developed with extensive application, design and manufacturing expertise. These products are produced by employing modern manufacturing practices under a robust quality assurance system. These practices ensure consistent product quality and dependable performance. The DelVal Series 50/52 Butterfly Valves have been designed to include state-of-the-art features that are described in this bulletin.

Features

Stem connection available in standard DelVal sizes or optional sizes to match standard secondary top plate drilling.

Top plate double drilled to fit ISO 5211 dimensions and standard secondary bolt circle dimensions. All handles, gear operators and pneumatic DelTorq actuators are designed to mount directly to DelVal Valves.

Nylon P A 12 coated disc option ensures excellent cor rosion resistance to several chemical media. The har non-porous sintered polymer has v low hygroscopicity and is suitable use in drinking water and n alcoholic foodstuffs.

One piece stem with close tolerance double D drive eliminates the need for disc screws or taper pins.

Double O-rings are molded in both upper and lower journals providing a superior secondary seal.

Unique "Center-Lock" seat design virtually eliminates any seat movement during the seating and un-seating of the disc.

Heavy duty square-grooved seat design with molded O-ring seals to serve as flange gaskets. EPDM and Buna-N seats are peroxide cured to yield the best elastic properties of the elastomer.

"Center-Lock" seat design

Unique stem retention system to provide blow-out proof stem and easy assembly and disassembly of valve.

Heavy duty acetal bushing absorbs the forces acting on the stem/disc assembly due to line pressure.

Bi-directional 'U' cup stem se

Heavy duty one-piece body with extended neck for 2" piping insulation. Standard coating is two coats of hard, Zinc-rich epoxy for excellent corrosion resistance.

Two flange locating holes for sizes up to 12" and four flange locating holes from size 14" to 24" for easy alignment of during valve installation. They meet ANSI #125 /150 or other world drilling standards.

High strength disc with hand polished disc edge and hubs.

Precision machined radius on the upper and lower disc hubs is pressed against upper and lower seat sealing faces for achieving primary sealing between disc and seat.

Engineering

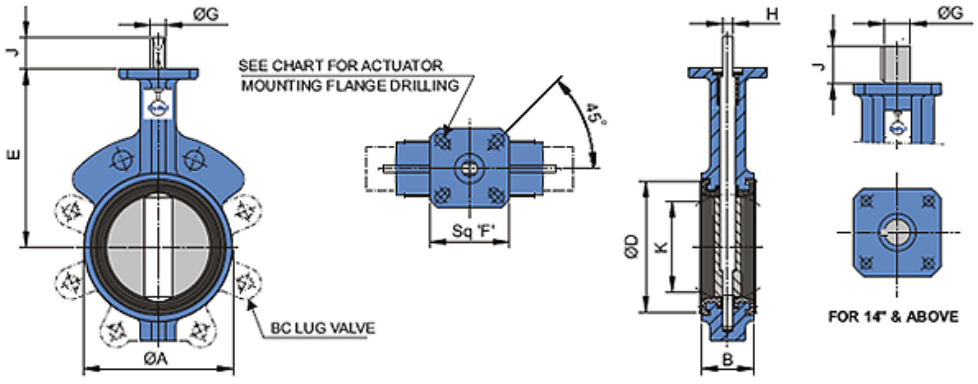

Valve Size		ØA	*B	ØD	E	Sq'F'	Top Plate Drilling			ØG	H	J	Key Size	K	Lug Bolting Data			Weight in Lbs.	
Inch	DN						BC	No. of Holes	Hole Dia						BC	No.of Holes	Threads UNC-2B	Wafer (Series 50)	Lug (Series 52)
2	50	3.46	1.69	2.99	5.51	3.15	2.76/3.25	4	0.39/0.438	0.55	0.39	1.25	---	1.32	4.75	4	5/8-11	5.07	6.79
2 ½	65	4.02	1.81	3.54	5.98	3.15	2.76/3.25	4	0.39/0.438	0.55	0.39	1.25	---	2.05	5.50	4	5/8-11	5.80	7.91
3	80	4.72	1.81	4.17	6.30	3.15	2.76/3.25	4	0.39/0.438	0.55	0.39	1.25	---	2.70	6.00	4	5/8-11	6.83	8.92
4	100	5.91	2.06	5.20	7.09	3.15	2.76/3.25	4	0.39/0.438	0.63	0.43	1.25	---	3.61	7.50	8	5/8-11	10.87	16.37
5	125	6.93	2.13	6.38	7.56	3.15	2.76/3.25	4	0.39/0.438	0.75	0.51	1.25	---	4.92	8.50	8	3/4-10	13.91	21.56
6	150	7.87	2.19	7.36	8.07	3.15	2.76/3.25	4	0.39/0.438	0.75	0.51	1.25	---	5.50	9.50	8	3/4-10	16.31	25.35
8	200	10.04	2.36	9.45	9.43	4.72	2.76/4.92/5.00	4	0.39/0.55/0.563	0.87	0.63	1.25	---	7.39	11.75	8	3/4-10	28.66	37.92
10	250	12.21	2.69	11.50	10.75	4.72	4.92/5.00	4	0.55/0.563	1.18	0.87	2.00	---	9.31	14.25	12	7/8-9	44.09	61.73
12	300	14.17	3.06	13.58	12.24	4.72	4.92/5.00	4	0.55/0.563	1.18	0.87	2.00	---	11.12	17.00	12	7/8-9	60.85	92.26
14	350	16.34	3.06	15.28	13.62	4.72	4.92/5.00	4	0.55/0.563	1.38	---	2.00	0.39x0.39	12.92	18.75	12	1-8	87.96	122.80
16	400	18.58	4.00	17.40	14.76	4.72	4.92	4	0.55	1.38	---	2.00	0.39x0.39	14.80	21.25	16	1-8	130.51	184.31
18	450	20.67	4.50	19.49	15.98	6.70	6.50	4	0.83	1.97	---	2.50	0.39x0.47	16.59	22.75	16	11/8 -7	194.45	239.42
20	500	22.83	5.00	21.57	17.24	6.70	6.50	4	0.83	1.97	---	2.50	0.39x0.47	18.61	25.00	20	11/8 -7	236.78	306.88
24	600	27.24	6.06	25.75	19.49	Ø8.27	6.50	4	0.83	2.50	---	4.00	0.62x0.62	22.55	29.50	20	11/4 -7	385.81	477.08

Valve Size		ØA	*B	ØD	E	Sq'F'	Top Plate Drilling			ØG	H	J	Key Size	K	Lug Bolting Data			Weight in Kg.	
Inch	DN						BC	No. of Holes	Hole Dia						BC	No.of Holes	Threads UNC-2B	Wafer (Series 50)	Lug (Series 52)
2	50	88	43	76	140	80	70/82.5	4	10/11	14	10	32	---	33.5	120.7	4	5/8-11	2.30	3.08
2 ½	65	102	46	90	152	80	70/82.5	4	10/11	14	10	32	---	52.1	139.7	4	5/8-11	2.63	3.59
3	80	120	46	106	160	80	70/82.5	4	10/11	14	10	32	---	68.5	152.4	4	5/8-11	3.10	4.05
4	100	150	52	132	180	80	70/82.5	4	10/11	16	11	32	---	91.7	190.5	8	5/8-11	4.93	7.42
5	125	175	55	160	192	80	70/82.5	4	10/11	19	13	32	---	117.3	215.9	8	3/4-10	6.31	9.78
6	150	200	56	187	205	80	70/82.5	4	10/11	19	13	32	---	139.7	241.3	8	3/4-10	7.40	11.50
8	200	233	60	240	241	120	125/127	4	14/14.3	22	16	32	---	187.3	298.5	8	3/4-10	12.70	17.20
10	250	310	68	292	273	120	125/127	4	14/14.3	30	22	51	---	236.4	362.0	12	7/8-9	20.00	28.00
12	300	360	78	345	311	120	125/127	4	14/14.3	30	22	51	---	282.4	431.8	12	7/8-9	27.60	41.85
14	350	415	78	388	346	120	125/127	4	14/14.3	35	---	51	10x10	328.3	476.2	12	1-8	39.90	55.70
16	400	472	102	442	375	120	125	4	14	35	---	51	10x10	375.8	539.7	16	1-8	59.20	83.60
18	450	525	114	495	406	170	165	4	21	50	---	64	10x12	421.4	577.8	16	1 1/8-7	88.20	108.60
20	500	580	127	548	438	170	165	4	21	50	---	64	10x12	472.6	635.0	20	1 1/8-7	107.40	139.20
24	600	692	154	654	495	Ø210	165	4	21	63.5	---	102	15.88x15.88	572.7	749.3	20	1 1/4-7	175.00	216.40

*Face to face dimension "B " generally confor ming to API 609 Categor y A/BS EN 558-1 Series 20/ISO 5752 Series 20 / MS S SP 67 / ASME B 16.10

Valve Size		2"	2.5"	3"	4"	5"	6"	8"	10"	12"	14"	15"	18"	20"	24"
Full Rated Pressure Valve ¡÷P,PSI	50	62	106	115	241	300	484	878	1409	2366	3064	3684	5796	6741	9601
	100	72	124	142	256	363	545	977	1586	2677	3527	4428	7273	8441	12482
	150	80	142	177	271	426	582	1083	1756	2987	3980	5178	8756	10126	15576
	175	91	150	197	279	443	620	1133	1841	3146	---	---	---	---	---
Reduced Disc Dia.¡÷P,PSI	50	62	106	115	133	187	267	623	771	1259	2159	2627	3649	4285	6500
Full Rated Pressure Valve ¡÷P,Bar	3.5	7	12	13	27	41	55	99	159	267	346	416	655	762	1085
	7	8	14	16	29	44	62	110	179	302	398	500	822	954	1410
	10	9	16	20	31	48	66	122	198	337	450	585	989	1144	1760
	12	10	17	22	32	50	70	128	208	355	---	---	---	---	---
Reduced Disc Dia.¡÷P,Bar	3.5	7	12	13	15	21	30	70	87	142	244	297	412	484	734

Material of Construction

Body **Stem**

• Cast Iron ASTM A126 Class B
• Ductile Iron ASTM A536 Grade 65-45-12
• Carbon steel ASTM A 216 WCB

Disc

• Nylon 12 Coated Ductile Iron ASTM A536 Grade 65-45-12
• DI ASTM A 536 Grade 65-45-12 + Aroxy coated
• 316 Stainless Steel ASTM A351 Grade CF8
• 410 Stainless Steel ASTM A479 Type 410
• 316 Stainless Steel ASTM A276 Type 316
• Carbon steel BS 970

Seat

• EPDM - Food Grade
• Buna-N - Food Grade
• White Buna-N - Food Grade
• Viton / FKM - Food Grade
• Silicone

General Design and Manufacturing Standard: API 609 / BS EN -593

Seat Temperature Range

Seat Type	Temperature Range	
	Min	Max
EPDM	-13° F(-25° C)	248° F(120° C)
BUNA-A	-13° F(-25° C)	212° F(100° C)
White BUNA-A	-13° F(-25° C)	212° F(100° C)
Viton/FKM	-23° F(-50° C)	356° F(200° C)
Silicone	-58° F(-50° C)	356° F(180° C)

*Vitonis registered trademark of E.I. DuPont

Testing Standard :

API 598 / BS EN 12266-1

Pressure Rating

For bi-directional bubble tight shut off and fu vacuum ser vice with disc in the closed posit

INCH	DN	PSIG	BARG
2"-12"	50-300	230	16
2"-12"	50-300	175	12
2"-24"	50-300	150	10
2"-24"	350-600	50	3.5

Dead-End Service : Without a downstream flange installed, the dead-end pressure ratings are equal to the values stated above.

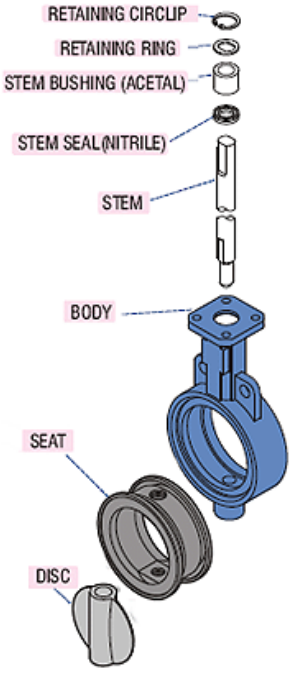

Operators

Valves up to size 12" can be supplied with lever handles for manual operation. Optional accessories for hand-lever operation can be provided for various flow control requirements. Pad locking can also be provided for preventing unauthorized operation

Valves up to size 24" can be direct mounted with gear operators for manual operation. Gear operators can also be attached with chainwheel operators for opening or closing valves located on pipelines at high elevations.

All valves can be direct mounted with pneumatic actuators or electric actuators and accessories for complete automation options such as fail open/close & positioner controlled. Valves can be mounted with manual overrides.

Copyright ©2008 Delval flow controls pvt.ltd. All rights reserved.¡¡

Butterfly Valves

Pneumatic Valve Actuators

DelVal Butterfly Valves

Leading the Industry with Innovation by Design

DelTech Controls is pleased to offer top-of-the-line products in pipeline flow control. The DelVal Series 50 (wafer body) and Series 52 (lug body) Butterfly Valves have been developed with extensive application, design and manufacturing expertise. These products are produced by employing modern manufacturing practices under a robust quality assurance system. These practices ensure consistent product quality and dependable performance. The DelVal Series 50/52 Butterfly Valves have been designed to include state-of-the-art features that are described in this bulletin.

Features

Stem connection available in standard DelVal sizes or optional sizes to match standard secondary top plate drilling.

Top plate double drilled to fit ISO 5211 dimensions and standard secondary bolt circle dimensions. All handles, gear operators and pneumatic DelTorq actuators are designed to mount directly to DelVal Valves.

Nylon P A 12 coated disc option ensures excellent cor rosion resistance to several chemical media. The har non-porous sintered polymer has v low hygroscopicity and is suitable use in drinking water and n alcoholic foodstuffs.

One piece stem with close tolerance double D drive eliminates the need for disc screws or taper pins.

Double O-rings are molded in both upper and lower journals providing a superior secondary seal.

Unique "Center-Lock" seat design virtually eliminates any seat movement during the seating and un-seating of the disc.

Heavy duty square-grooved seat design with molded O-ring seals to serve as flange gaskets. EPDM and Buna-N seats are peroxide cured to yield the best elastic properties of the elastomer.

"Center-Lock" seat design

Unique stem retention system to provide blow-out proof stem and easy assembly and disassembly of valve.

Heavy duty acetal bushing absorbs the forces acting on the stem/disc assembly due to line pressure.

Bi-directional 'U' cup stem se

Heavy duty one-piece body with extended neck for 2" piping insulation. Standard coating is two coats of hard, Zinc-rich epoxy for excellent corrosion resistance.

Two flange locating holes for sizes up to 12" and four flange locating holes from size 14" to 24" for easy alignment of during valve installation. They meet ANSI #125 /150 or other world drilling standards.

High strength disc with hand polished disc edge and hubs.

Precision machined radius on the upper and lower disc hubs is pressed against upper and lower seat sealing faces for achieving primary sealing between disc and seat.

Engineering

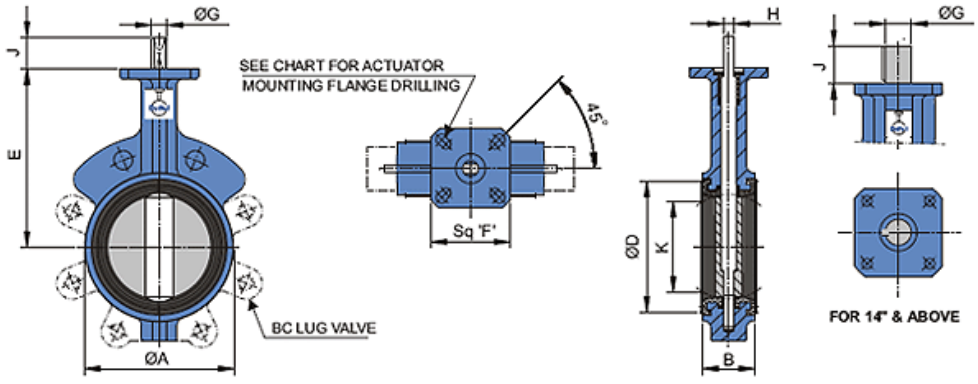

Valve Size		ØA	*B	ØD	E	Sq'F'	Top Plate Drilling			ØG	H	J	Key Size	K	Lug Bolting Data			Weight in Lbs.	
Inch	DN						BC	No. of Holes	Hole Dia						BC	No.of Holes	Threads UNC-2B	Wafer (Series 50)	Lug (Series 52)
2	50	3.46	1.69	2.99	5.51	3.15	2.76/3.25	4	0.39/0.438	0.55	0.39	1.25	---	1.32	4.75	4	5/8-11	5.07	6.79
2 ½	65	4.02	1.81	3.54	5.98	3.15	2.76/3.25	4	0.39/0.438	0.55	0.39	1.25	---	2.05	5.50	4	5/8-11	5.80	7.91
3	80	4.72	1.81	4.17	6.30	3.15	2.76/3.25	4	0.39/0.438	0.55	0.39	1.25	---	2.70	6.00	4	5/8-11	6.83	8.92
4	100	5.91	2.06	5.20	7.09	3.15	2.76/3.25	4	0.39/0.438	0.63	0.43	1.25	---	3.61	7.50	8	5/8-11	10.87	16.37
5	125	6.89	2.19	6.30	7.56	3.15	2.76/3.25	4	0.39/0.438	0.75	0.51	1.25	---	4.62	8.50	8	3/4-10	13.91	21.56
6	150	7.87	2.19	7.36	8.07	3.15	2.76/3.25	4	0.39/0.438	0.75	0.51	1.25	---	5.50	9.50	8	3/4-10	16.31	25.35
8	200	10.04	2.38	9.45	9.49	4.72	2.76/4.92/5.00	4	0.39/0.55/0.563	0.87	0.63	1.25	---	7.39	11.75	8	3/4-10	28.00	37.92
10	250	12.01	2.80	11.50	10.75	4.72	4.92/5.00	4	0.55/0.563	1.18	0.87	2.00	---	9.21	14.25	12	7/8-9	44.00	61.73
12	300	14.17	3.06	13.58	12.24	4.72	4.92/5.00	4	0.55/0.563	1.18	0.87	2.00	---	11.12	17.00	12	7/8-9	60.85	92.26
14	350	15.94	3.06	15.25	13.62	4.72	4.92/5.00	4	0.55/0.563	1.38	---	2.00	0.39x0.39	12.62	19.75	12	1-8	87.00	122.00
16	400	18.58	4.00	17.40	14.76	4.72	4.92	4	0.55	1.38	---	2.00	0.39x0.39	14.80	21.25	16	1-8	130.51	184.31
18	450	20.67	4.50	19.49	15.98	6.70	6.50	4	0.83	1.97	---	2.50	0.39x0.47	16.59	22.75	16	11/8 -7	194.45	239.42
20	500	22.83	5.00	21.57	17.24	6.70	6.50	4	0.83	1.97	---	2.50	0.39x0.47	18.61	25.00	20	11/8 -7	236.78	306.88
24	600	27.24	6.06	25.75	19.49	Ø8.27	6.50	4	0.83	2.50	---	4.00	0.62x0.62	22.55	29.50	20	11/4 -7	385.81	477.08

Valve Size		ØA	*B	ØD	E	Sq'F'	Top Plate Drilling			ØG	H	J	Key Size	K	Lug Bolting Data			Weight in Kg.	
Inch	DN						BC	No. of Holes	Hole Dia						BC	No.of Holes	Threads UNC-2B	Wafer (Series 50)	Lug (Series 52)
2	50	88	43	76	140	80	70/82.5	4	10/11	14	10	32	---	33.5	120.7	4	5/8-11	2.30	3.08
2 ½	65	102	46	90	152	80	70/82.5	4	10/11	14	10	32	---	52.1	139.7	4	5/8-11	2.63	3.59
3	80	120	46	106	160	80	70/82.5	4	10/11	14	10	32	---	68.5	152.4	4	5/8-11	3.10	4.05
4	100	150	52	132	180	80	70/82.5	4	10/11	16	11	32	---	91.7	190.5	8	5/8-11	4.93	7.42
5	125	175	56	160	192	80	70/82.5	4	10/11	19	13	32	---	117.3	215.9	8	3/4-10	6.31	9.78
6	150	200	56	187	205	80	70/82.5	4	10/11	19	13	32	---	139.7	241.3	8	3/4-10	7.40	11.50
8	200	255	60	240	241	120	70/125/127	4	10/14/14.3	22	16	32	---	187.6	298.5	8	3/4-10	12.70	17.20
10	250	310	68	292	273	120	125/127	4	14/14.3	30	22	51	---	236.4	362.0	12	7/8-9	20.00	28.00
12	300	360	78	345	311	120	125/127	4	14/14.3	30	22	51	---	282.4	431.8	12	7/8-9	27.60	41.85
14	350	415	78	388	346	120	125/127	4	14/14.3	35	---	51	10x10	328.2	476.2	12	1-8	39.00	55.70
16	400	472	102	442	375	120	125	4	14	35	---	51	10x10	375.8	539.7	16	1-8	59.20	83.60
18	450	525	114	495	406	170	165	4	21	50	---	64	10x12	421.4	577.8	16	1 1/8-7	88.20	108.60
20	500	580	127	548	438	170	165	4	21	50	---	64	10x12	472.6	635.0	20	1 1/8-7	107.40	139.20
24	600	692	154	654	495	Ø210	165	4	21	63.5	---	102	15.88x15.88	572.7	749.3	20	1 1/4-7	175.00	216.40

*Face to face dimension "B " generally confor ming to API 609 Categor y A/BS EN 558-1 Series 20/ISO 5752 Series 20 / MS S SP 67 / ASME B 16.10

Valve Size		2"	2.5"	3"	4"	5"	6"	8"	10"	12"	14"	15"	18"	20"	24"
Full Rated Pressure Valve ¡÷P,PSI	50	62	106	115	241	360	484	878	1409	2366	3064	3684	5796	6741	9601
	100	72	124	142	256	393	545	977	1586	2677	3527	4428	7273	8441	12482
	150	80	142	177	271	426	582	1083	1756	2987	3980	5178	8756	10126	15576
	175	91	150	197	279	443	620	1133	1841	3146	---	---	---	---	---
Reduced Disc Dia.¡÷P,PSI	50	62	106	115	133	187	267	623	771	1259	2159	2627	3649	4285	6500
Full Rated Pressure Valve ¡÷P,Bar	3.5	7	12	13	27	41	55	99	159	267	346	416	655	762	1085
	7	8	14	16	29	44	62	110	179	302	398	500	822	954	1410
	10	9	16	20	31	48	66	122	198	337	450	585	989	1144	1760
	12	10	17	22	32	50	70	128	208	355	---	---	---	---	---
Reduced Disc Dia.¡÷P,Bar	3.5	7	12	13	15	21	30	70	87	142	244	297	412	484	734

Material of Construction

Body **Stem**

• Cast Iron ASTM A126 Class B
• Ductile Iron ASTM A536 Grade 65-45-12
• Carbon steel ASTM A 216 WCB

Disc

• Nylon 12 Coated Ductile Iron ASTM A536 Grade 65-45-12
• DI ASTM A 536 Grade 65-45-12 + Aroxy coated
• 316 Stainless Steel ASTM A351 Grade CF8
• 410 Stainless Steel ASTM A479 Type 410
• 316 Stainless Steel ASTM A276 Type 316
• Carbon steel BS 970

Seat

• EPDM - Food Grade
• Buna-N - Food Grade
• White Buna-N - Food Grade
• Viton / FKM - Food Grade
• Silicone

General Design and Manufacturing Standard: API 609 / BS EN -593

Seat Temperature Range

Seat Type	Temperature Range	
	Min	Max
EPDM	-13° F(-25° C)	248° F(120° C)
BUNA-A	-13° F(-25° C)	212° F(100° C)
White BUNA-A	-13° F(-25° C)	212° F(100° C)
Viton/FKM	-23° F(-50° C)	356° F(200° C)
Silicone	-58° F(-50° C)	356° F(180° C)

*Vitonis registered trademark of E.I. DuPont

Testing Standard :

API 598 / BS EN 12266-1

Pressure Rating

For bi-directional bubble tight shut off and fu vacuum ser vice with disc in the closed posit

INCH	DN	PSIG	BARG
2"-12"	50-300	230	16
2"-12"	50-300	175	12
2"-24"	50-300	150	10
2"-24"	350-600	50	3.5

Dead-End Service : Without a downstream flange installed, the dead-end pressure ratings are equal to the values stated above.

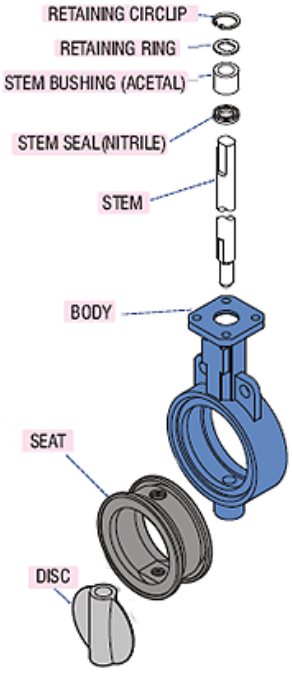

Operators

Valves up to size 12" can be supplied with lever handles for manual operation. Optional accessories for hand-lever operation can be provided for various flow control requirements. Pad locking can also be provided for preventing unauthorized operation

Valves up to size 24" can be direct mounted with gear operators for manual operation. Gear operators can also be attached with chainwheel operators for opening or closing valves located on pipelines at high elevations.

All valves can be direct mounted with pneumatic actuators or electric actuators and accessories for complete automation options such as fail open/close & positioner controlled. Valves can be mounted with manual overrides.

Copyright ©2008 Delval flow controls pvt.ltd. All rights reserved.¡¡

DelTech	**DelTech Controls, L.L.C.**	**DelVal Flow Controls Private limited** (A DIVISION OF DelTech CONTROLS LLC, USA)

DelVal Series – 50/52, 5A/5B Butterfly Valves

INSTALLATION, OPERATION AND MAINTENANCE MANUAL

ENGINEERING DATA SHEET
E.D.S. NO – EDS 055
ISSUE DATE : NOVEMBER 2006

(Please read the entire instructions carefully before installation or servicing.)

Guarantee :

"Our liability, with respect to any defect or failure of the goods supplied or for any loss, injury or damage attributable onward, is limited to replacement or repair of the defects which under proper use appear therein and arise solely from faulty materials and workmanship. This guarantee is for a period of 18 calendar months after the original goods were first shipped or within 12 calendar months from the date of installation, whichever is earlier, provided that such defective parts are returned without charge to our factory for examination. No other warranty is either expressed or implied."

TABLE OF CONTENTS

Item	Description	Page no
1.	Introduction	2
2.	Technical Data	2
3.	Safety Precautions	2
4.	Transportation, Receiving and Storage	3
5.	Installation	3
6.	Operation of the Valve	4
7.	Maintenance	4
8.	Disassembly & Assembly Instructions	5
9.	Recommended Spare Parts	6
10.	Exploded View	7
11	Troubleshooting	8

1 Introduction

1.1 Scope of the Manual.

The purpose of this manual is to ensure that the valves supplied are properly installed and maintained to give trouble free performance.

This manual covers DelVal single piece body butterfly valves from 2” to 24” in both wafer and lug designs.

1.2 Marking.

Specifications of the valve are marked on the body or on name plate or both, prior to shipment. The identification marking generally consists of size of valve, pressure rating, body material, trim material and the date of manufacturing. (Ref to fig 1.1)

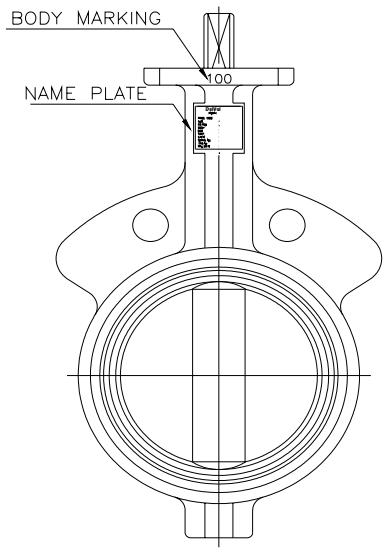

Fig 1.1 Valve Marking

2 Technical data

2.1 Pressure Rating

Construction :
Single piece body both in wafer and lug design.

Pressure Rating :

Valve Size	Rating
2” - 12”	175 PSI.
14” - 24”	150 PSI.
2” – 24”	50 PSI.

Seat Temperature Range.

Seat type	Temperature Range
EPDM	-13^0 F (-25^0 C) TO 248^0 F (120^0 C)
BUNA-N / Nitrile	-13^0 F (-25^0 C) TO 212^0 F (100^0 C)
Viton / FKM	-23^0 F (-5^0 C) TO 392^0 F (200^0 C)
Silicone	-58^{0}F (-50^0 C) TO 356^0 F (180^0 C)

3 Safety Precautions.

3.1 Do not exceed the valve pressure / temperature rating limitations!

- *Exceeding the pressure/temperature rating limitations marked on the valve may result in major damage or Personal injury. Users of these valves should ensure that the valve pressure / temperature is less than or equal to the rated pressure/temperatures. If required, end user should incorporate appropriate limiting/monitoring devices in the system for the safe operation of the valve.*

3.2 Use the valve for specified application only!

- *User to ensure that the valve is used only for the specified application as agreed between the manufacturer and the purchaser.*

3.3 Follow the safety rules and regulations!

- *User of the valve must be aware of all the safety rules and regulations related to a particular environment in which the valve is to be used.*

3.4 Do not disassemble the valve or remove it from the pipeline while the valve is pressurized!

- *Disassembling or removing a pressurized valve will result in uncontrolled pressure release. Always isolate the relevant part of the pipeline, release the pressure from the valve and remove the media before dismantling the valve.*
- *Be aware of the type of media involved. Protect people and the environment from any harmful or poisonous substances.*
- *Make sure that no dust, dirt can enter the pipeline during the valve maintenance.*

3.5 When handling the valve or the valve package, bear in mind its weight!

- *Never lift the valve or valve package by the handle, gear operator, actuator or hand wheel. Place the rope securely around the valve body while handling the valve. Refer to Fig No. 1.2*

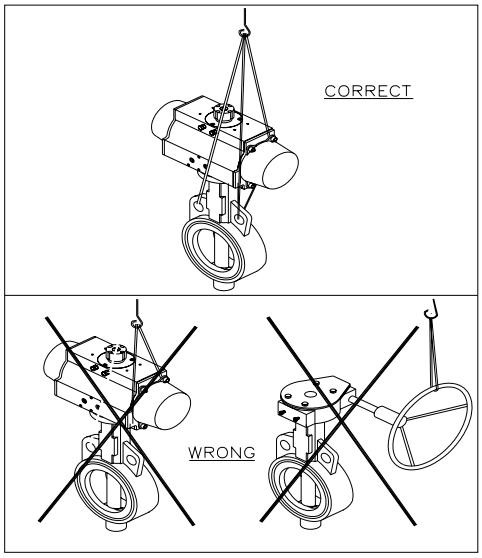

Fig 1.2 Lifting of the Valve

4 Transportation, Receiving and Storage.

4.1 Valves are being packed in cartons, boxes or pallets while shipping to the customer. Care should be taken to store them in a suitable place. We recommend storing the valves indoors in a dry and dust free atmosphere (Refer to figure 2.1). While unpacking the valves, check that the valves and any other accessories have not been damaged during transportation.

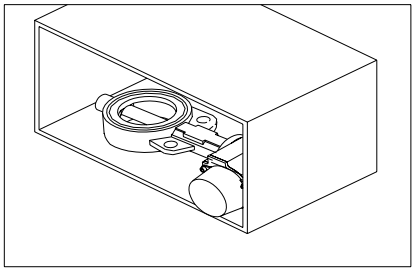

Fig 2.1 Storing the Valve.

- ***Caution:***
  Placing the valves directly on the ground or on a concrete floor should be avoided!

4.2 All wrapping and protection on the valves should not be removed until the valve is ready for installation. All valves are delivered with disc in 10^0 open position (Refer to figure 2.2).

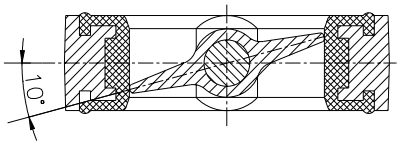

Fig 2.2 Disc in 10^0 open position

4.3 If the valves are stored for a long time, then all the valves should be cleaned and hydro / pneumatic tested before installation. Refer to General Arrangement drawing, which lists the appropriate testing standards, or consult the nearest branch office / factory for more information.

4.4 Valves are bi-directional and can be installed in either direction.

4.5 Lever or hand wheel of gear operator for respective valves are packed loosely and kept in the same box, in which the valve is packed (wherever applicable). When handling the valve either by hand or by mechanical means, special care should be taken not to damage the lever or gear operator. Lift the valve only as shown in fig 1.2. Lifting the valve from any other location may damage the valve components.

5 Installation

5.1 When removing the valve from storage a careful check should be made to ensure that the valve has not been damaged during the storage period.

5.2 Valve open or close position is indicated on the notch plate for lever operated valves or on the top of the gear operator for gear operator operated valves.

5.3 Center valve, span body with bolts, but do not tighten. Slowly open disc to ensure that it clears adjacent pipe ID and leave at full open position. Tighten bolts in cris

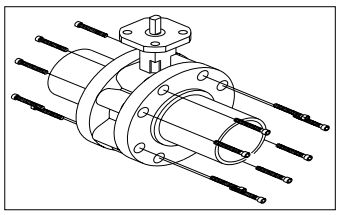

cross pattern.

Fig 3.1 Lug Valve Installation.

5.4 For flange welding center valve with disc 10^0 open between flanges, span bolts, align this assembly in pipe and tack weld flanges to pipe. After tack welding, remove valve and finish welding.

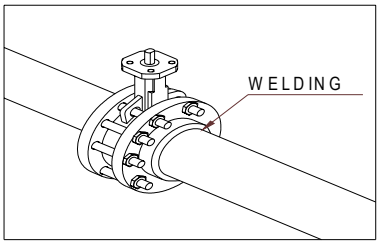

Fig 3.2

5.5 Valve should be checked for identification purpose and ensure that characteristics of valve matches to those specified for piping specifications, for the line where that is to be mounted. Nameplate instructions will give the necessary information.

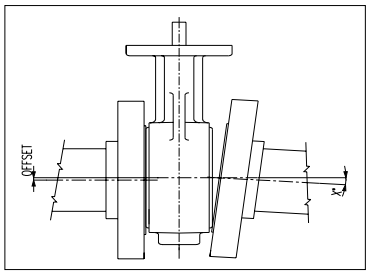

Fig 3.3 Valve Alignment.

Note:
It is recommended to use ASTM A193 Gr.B7 fasteners for flange bolting.

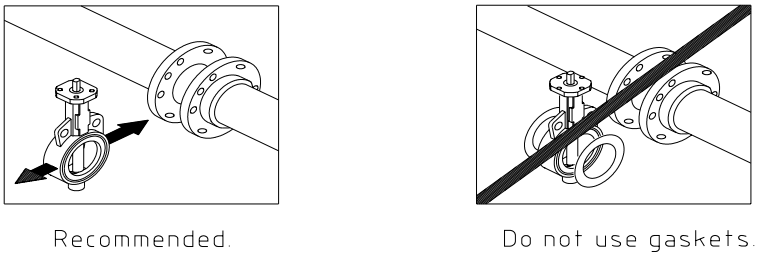

Fig 3.4 : Installation of valve into pipe line.

Note: *a) Do not attempt to correct the line misalignment by means of flange bolting Ref to fig 3.3.*
b) Do not use flange gaskets Ref to fig 3.4.

6 Operation of the Valve.

6.1 For lever operated valves, the hand lever is either assembled with the valve or shipped loose depending upon the size of valve / hand lever.

6.2 For gear operated valves, ***THE GEAR OPERATOR OPEN / CLOSE ADJUSTMENT HAS BEEN DONE PRIOR TO SHIPMENT AND MUST NOT BE CHANGED.*** Rotation of hand wheel in the clockwise direction closes the valve and counter clockwise rotation opens it. (Looking from hand wheel end) The details of gear operator are shown in the fig. 4.1. The internal details/construction of gear operator may vary as per manufacturers standard.

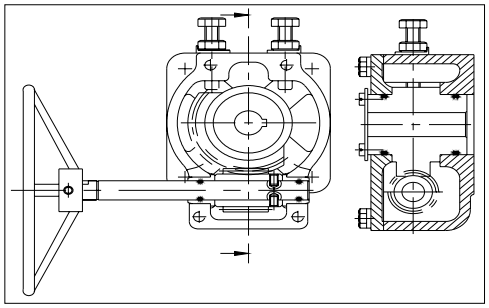

Fig 4.1 : Details of gear operator.

6.3 DelTech Butterfly valve always close in a clockwise direction. Valve should always be rotated through 90º to the fully opened or fully closed position.

6.4 Valve should be opened and closed slowly to avoid hammering effect on the valve and pipeline.

6.5 Once the flushing is complete, valve should be operated 3-4 times and then kept in the fully open position.

6.6 If the valve is not operating to fully open or fully closed position, and/or leaking, do not apply excessive force to operate the valve. This can damage the seats or stem.

Caution:

- *Apply gradual force on the handwheel of the gear operator and do not give impacts.*
- *Do not apply extra leverage (using pipe/bar), when the end stops of the gear operator are reached.*

7 Maintenance.

Note:
Observe the safety precautions as outlined in section 3 before performing maintenance.

7.1 Preventive Maintenance.

7.1.1 In order to avoid valve failure during operation, all valves in a process plant should be periodically inspected thoroughly to detect the wear of disc, seats, seals and even body. It is recommended that on such occasions seats, seals and bushings should be replaced.

7.1.2 The type of process, fluids involved, working conditions and location of the valves in the process plants, will determine the frequency of periodic inspection / maintenance which in fact will be made at the time of partial or total shutdown of the plant. Preventive maintenance is absolutely essential as the failure due to lack of the same may cause an emergency shut down of the plant.

7.1.3 Section 8 describes the procedure for disassembly, repair and assembly of the valve. The procedure will be the same for a valve failing during operation due to lack of preventive maintenance.

7.1.4 Once a valve is repaired, it should undergo a complete set of tests to make sure that the valve is adequate for the original working conditions. Hydro/Pneumatic tests should be carried out as per the specifications relevant to the valve (Refer General Arrangement Drawing).

7.2 Lubrication of Worm Gear operator.

7.2.1 Worm gear operators are packed with grease. Normally the grease is suitable for -20°C (-4^{0}F) to 80°C (176^{0}F). For other applications, consult the nearest branch office / factory.

7.2.2 Grease should be changed as following. If operated frequently, after approx. 3 years. If operated rarely, after approx. 5 years.

7.2.3 Recommended Greases-
Servogem EP2 (Extreme Pressure),
Mobilux EP2,
Valvoline EP2,
Chevron EP2.

WARNING

Pipeline pressure can propel the loose flange bolts & flanges, and can cause personal injury or equipment damage. Relieve pipeline pressure before removing flange bolts and flanges.

WARNING

Moving Parts from accidental operation of powered (Pneumatically / Electrically) actuator can cause personal injury or equipment damage. Disconnect and lock power to actuator before servicing.

8 Disassembly and Assembly Instructions :

8.1 Disassembly Instructions:

(Refer to exploded view No. 10.1)

Before disassembling, please ensure that all spare parts as detailed in Table 1 of Section 9, are available. For below mentioned procedure, the numbers in the bracket refer to the part numbers of the components as indicated in exploded view (fig no 10.1).

- In case the valve is in operation, release the pressure from the line.
- Rotate the valve stem (04) manually to keep the Valve in the half-open position. This will remove pressure in the pipeline.
- Always fully close valve before removing from line to avoid damage to disc
- Valve can be repaired by removing the entire valve from pipeline. Use mounting holes to lift the valve (Wherever applicable).

8.1.1 Unscrew the lever lock bolt (13). Lift the lever (14) by pressing the latch of the lever out of the stem (4) in case of hand lever operated valve.

8.1.2 Lift the gear operator (15) out of the stem (4) by removing the bolts in case of gear operated valve.

8.1.3 Remove the notch plate bolts (10,11,12) and remove the notch plate (9).

8.1.4 Remove the circlip (8) (fig 8.1) and pull the stem out with stem retainer ring (7).

8.1.5 Pull the disc (3) from the body (1) as shown in fig 8.2

8.1.6 Remove the stem bushing (6) and U cup stem seal (5) from the body (4).

8.1.7 Compress the seat as shown and pull it out from the body (Refer to the fig 8.3).

Note: *After the complete disassembly of the valve, all the components should be stored in a clean place to avoid damage.*

8.2 Repair of Components.

8.2.1 The metallic parts should be cleaned.

8.2.2 To clean the seats and seals use a dry clean cloth.

8.2.3 After cleaning components examine for damaged parts. Ensure that there are no scoring marks on the metallic sealing surfaces. Check the seals for scratches / wear.

8.2.4 Replace the damaged parts. The parts such as seal, bushings are recommended to be replaced with new ones whenever the valve is dis-assembled: refer to Table 1 of Section – 9 for further details.

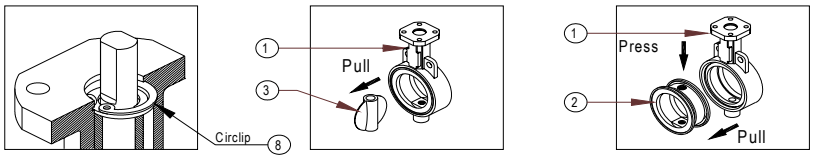

Fig 8.1 Fig 8.2 Fig 8.3

Disassembly of the Stem, Disc and Seat.

Note: *When the gear operator or hand lever or actuator is re-assembled on the valve, it may be necessary to adjust gear operator or hand lever or actuator travel stops to ensure proper setting of the butterfly in the open and closed position*

8.3 Assembly Instructions.

(Refer to exploded view No. 10.1)

8.3.1 VALVES OPERATING WITH LEVER.

8.3.1.1 Place the body (1) on a clean work surface.

8.3.1.2 Start assembly by pressing the seat as shown & pushing it into the valve body with seat stem holes aligned to the body stem holes as shown in the fig (8.4) and work the seat into the groove provided on the body.

8.3.1.3 Position the disc (2) as shown in fig (8.5) taking care that double D is at the bottom of the valve body. Special care must be taken not to damage the seat surface.

8.3.1.4 Insert U cup seal (5), bushing (6) refer fig no 8.6.

8.3.1.5 For 2”-12”(series 50/52) and 2”-8” (series 5A/5B) Insert the stem (4) in to the body ensuring that double D of stem aligns with double D of the disc. Insert the retaining ring (7) in to the stem and then install the retaining circlip (8) refer fig no 8.6.

8.3.1.6 For 14” -24”(series 50/52)and 10”-14”(series 5A/5B) Insert the stem (4) in to the body ensuring that double D of stem aligns with double D of the disc. Install the stem retaining cirlip(17) in to the stem, insert the retaining ring (7) in to the stem (4) and then install the retaining circlip (8) refer fig no 8.6.

8.3.1.7 Fit the notch plate (9) on the mounting flange with the notches in the first quadrant of the valve top plate with the stop tabs at the 12 O' clock and 3 O' clock position (fig 8.7).

8.3.1.8 Fit the lever (14) so that the lever fully engages in the notches when the lever latch is released and tighten the handle lock bolt (13).

8.3.1.9 Press the handle lever latch and position the disc so that the valve is in the fully closed position. Align the last notch on the notch plate at the 3-o clock position with the handle lever and tighten the notch plate screws.

8.3.1.10 Press the handle lever latch and position the disc so that the valve is in the fully open position and release the lever. The lever should line up with the last notch on the notch plate at the 12-o clock position.

8.3.2 VALVES OPERATING WITH GEAR OPERATOR.

(Refer Table 1 of Section –9 & Exploded View No. 10.1)

8.3.2.1 Follow the points from 8.3.1.1 to 8.3.1.5.

8.3.2.2 Rotate the valve disc to the fully open position.

8.3.2.3 Rotate the gear operator to the fully open position.

8.3.2.4 Line the valve stem with gear operator bore and slide the gear operator (15) onto the valve with the hand wheel (16) to the right of the valve name plate.

8.3.2.5 Position the gear operator so that the tapped holes in the bottom of the gear operator line up with the valve top mounting holes and install the mounting bolts.

8.3.2.6 Loosen the gear operator travel stops and rotate the handwheel until the valve is in the fully closed position. Tighten the travel stop on the right hand side of the gear operator.

8.3.2.7 Rotate the hand wheel until the valve is in fully open position. Tighten the travel stop on the left-hand side of the gear operator.

8.3.2.8 Make 2-3 cycles of the valve from fully open position to the fully closed position to make sure that the stops are set correctly.

9 Recommended Spares Kit.

10 Before the start of the repair operations, we recommend that one set of spares as given in the table below should be available.

For normal operation (2 years), we recommend one set of spares be available at site.

9.1 List of Recommended Spare Parts		
Table no 1.		
Part Name	**Part No.**	**Qty. (Nos.)**
Seat	2	01
Bushing	6	01
U cup seal	5	01
Circlip	8	01

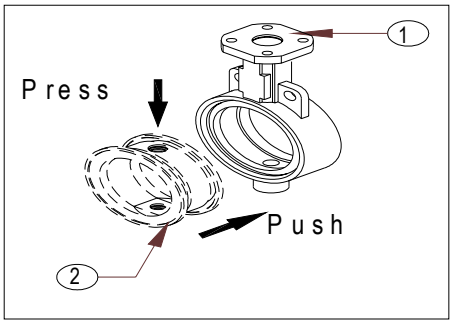

Fig 8.4

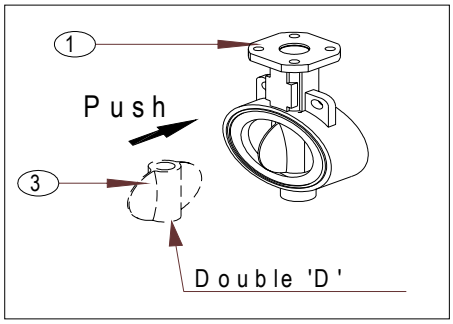

Fig 8.5

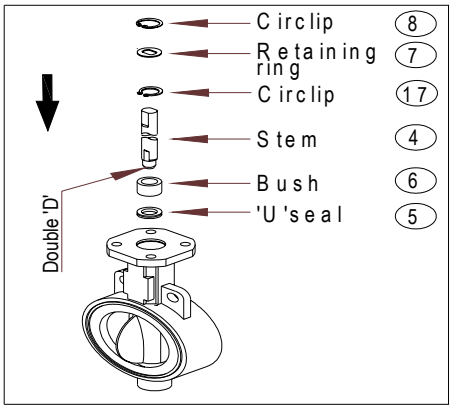

Fig 8.6

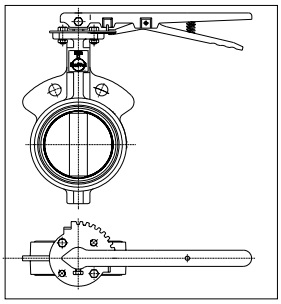

Fig 8.7 Notch plate position.

10. Exploded View

Exploded View Fig No: 10.1

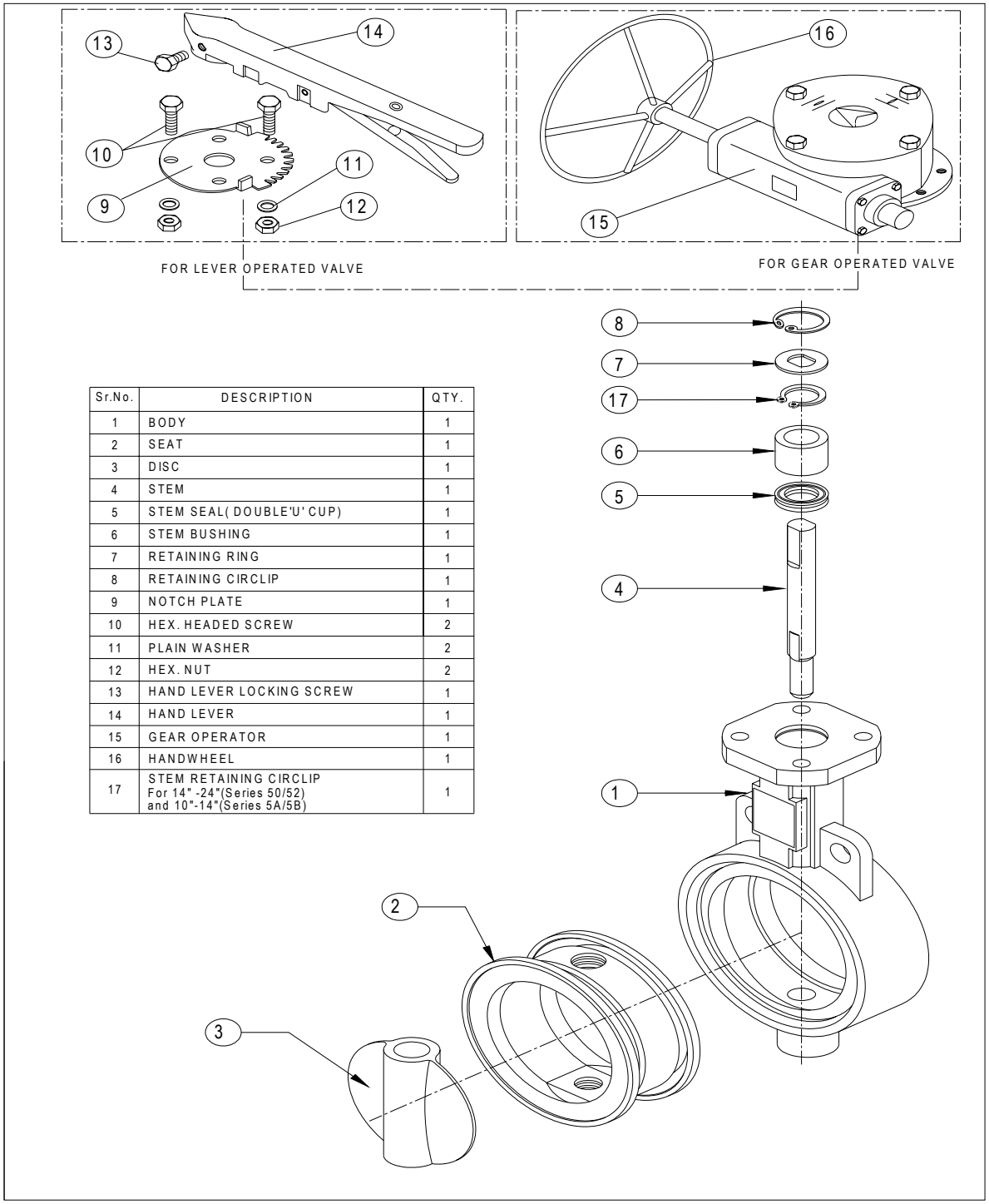

Sr.No.	DESCRIPTION	QTY.
1	BODY	1
2	SEAT	1
3	DISC	1
4	STEM	1
5	STEM SEAL(DOUBLE'U' CUP)	1
6	STEM BUSHING	1
7	RETAINING RING	1
8	RETAINING CIRCLIP	1
9	NOTCH PLATE	1
10	HEX. HEADED SCREW	2
11	PLAIN WASHER	2
12	HEX. NUT	2
13	HAND LEVER LOCKING SCREW	1
14	HAND LEVER	1
15	GEAR OPERATOR	1
16	HANDWHEEL	1
17	STEM RETAINING CIRCLIP For 14" -24"(Series 50/52) and 10"-14"(Series 5A/5B)	1

Troubleshooting:

Symptom	Cause	Corrective Action
Stem Leaks	Stem seal in seat is leaking	Replace stem sealing as described in disassembly & assembly.
Valve leaks at closed position	Seat is worn or damaged	Replace seat as described in disassembly & assembly.
	Disc edge is worn or damaged.	Consult factory for potential application problem.

US Valve

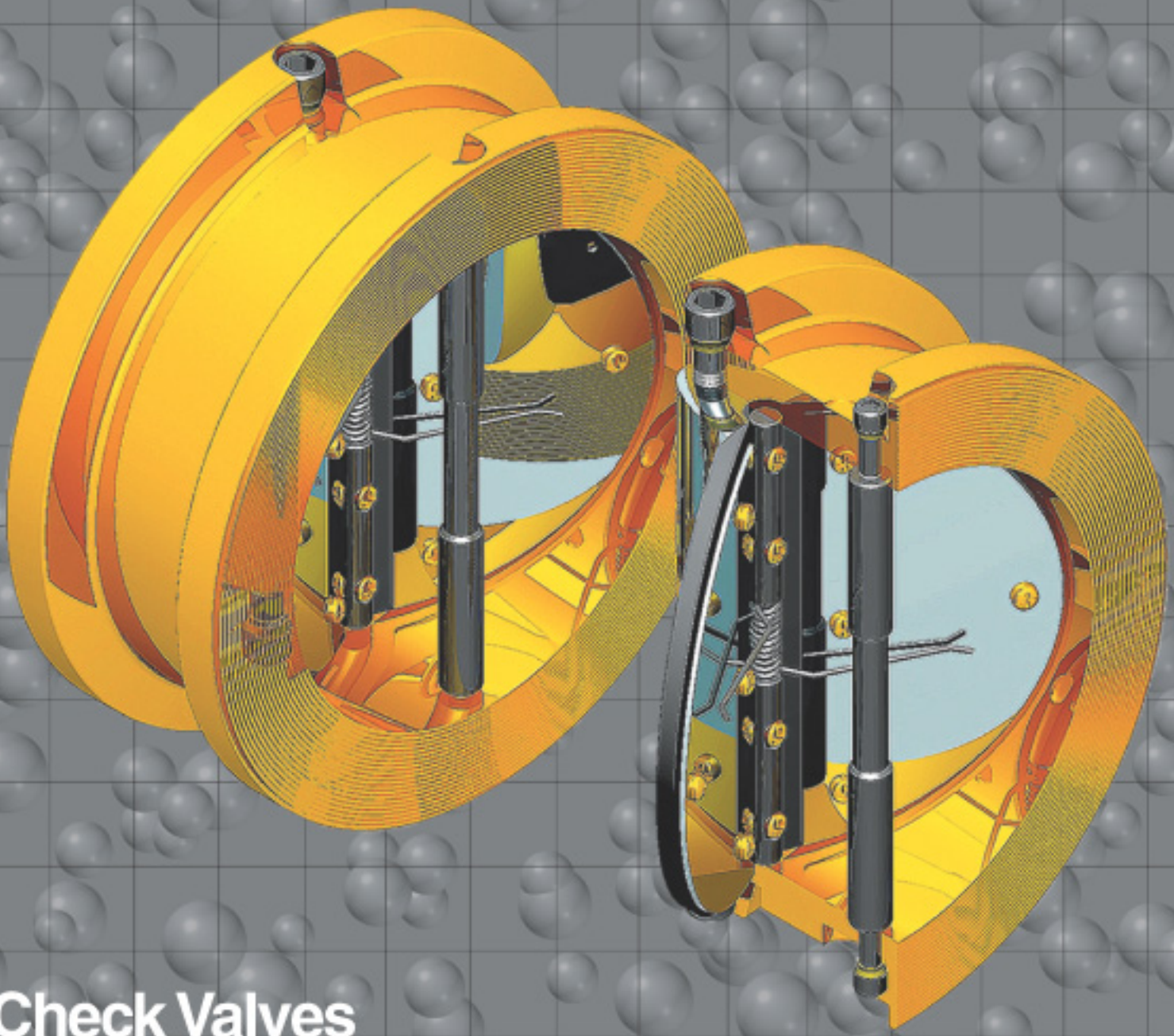

Check Valves

Wafer

Made in the USA

Patent Pending

U.S. Valve

We make high-performance check valves that will double your Cv.[1] If you are looking for the lowest possible pressure loss then our resilient hinged double disc valves are what you need.

Durable

Our unique, air-foil designed wing support conditions the flow profile, resulting in a more laminar, less turbulent flow, thus extending the life of the valve. Our valves consistently out-perform all other products on the market today.

Low Maintenance

A protective coating secures our valves against normal atmospheric corrosion and enhances appearance, making priming and painting unecessary.

Reliable

Each of our valves is individually inspected and tested to ensure performance. Most manufacturers will check only random valves. **We test every, single one.**

Highest Quality

Our designs specify the finest materials engineered specifically for each application. We manufacture all our valves with forged wing supports for superior strength against linear loads, and all wing pins and fasteners are made of 316 stainless steel.

Manufactured by U.S. Valve

Every component is manufactured entirely by U.S. Valve. We control the quality, we control delivery and we keep our prices down.

In Stock

We stock a vast inventory of valves, so most sizes and materials can ship the same day.

[1]The Cv of our high-performance check valves is almost twice that of conventional, metallic-hinge, double door check valves for sizes 2" through 4" and approximately 25% more for sizes 16" through 24".

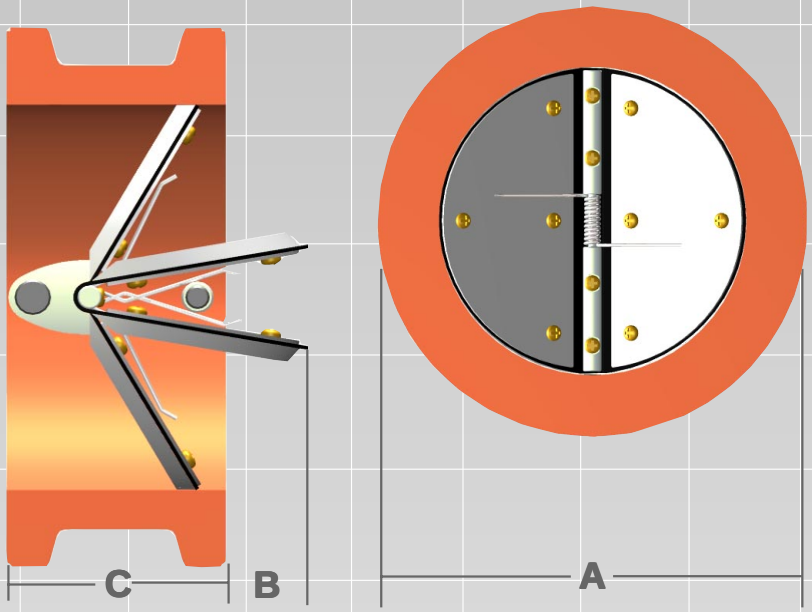

Standard Wafer Models and Materials*

Model	Body	Discs	Wing Support	M.O.P.#
09-0-0	Aluminum ASTM B26 319 or 355 (Solid Body)	Aluminum ASTM B209 6061T6	Forged Aluminum 6061	50 PSI
09-1-0	Carbon Steel ASTM A216Gr.WBC (Solid Body)	Aluminum ASTM B209 6061T6	Forged Aluminum 6061	150 PSI
09-1-4	Carbon Steel ASTM A216Gr.WBC (Solid Body)	Stainless Steel ASTM A240 316	Forged Stainless Steel 316	150 PSI
09-2-0	Cast Iron ASTM 126 Gr.B	Aluminum ASTM B209 6061T6	Forged Aluminum 6061	125 PSI
09-2-3	Cast Iron ASTM 126 Gr.B	Brass ASTM B36 C260	Forged Brass ASTM B124 C377	125 PSI
09-2-4	Cast Iron ASTM 126 Gr.B	Stainless Steel ASTM A240 316	Forged Stainless Steel 316	125 PSI
09-3-3	Brass ASTM B62 Alloy C836 (Solid Body)	Brass ASTM B36 C260	Forged Brass ASTM B124 C377	150 PSI
09-4-4	Stainless Steel Gr. 316 (Solid Body)	Stainless Steel ASTM A240 316	Forged Stainless Steel 316	150 PSI

*All fasteners and spring pins are 316 stainless steel. BUNA-N is standard seal in all valves. Optional seal materials: EPDM, SILICONE, VITON. 316 stainless steel springs are optional for all models. Consult factory for any other special material requirements.

#Max Operating Pressure at 60°F.

Dimensional Data: (inches)

Valve size	A	B	C*
1 1/2	3.3	0.3	1.4
2	4.1	0.5	1.6
2 1/2	4.7	0.6	1.6
3	5.3	0.7	2.3
4	6.7	0.9	2.4
5	7.7	1.1	2.7
6	8.7	1.5	3.4
8	11.0	2.3	4.2
10	13.3	2.5	5.4
12	16.1	3.0	6.4
14	17.7	3.3	7.4
16	20.2	3.8	8.4
18	21.6	4.3	9.4
20	23.7	4.8	10.4
24	28.2	5.8	12.4

Consult factory for larger sizes.

* All "C" dimensions ±.060"

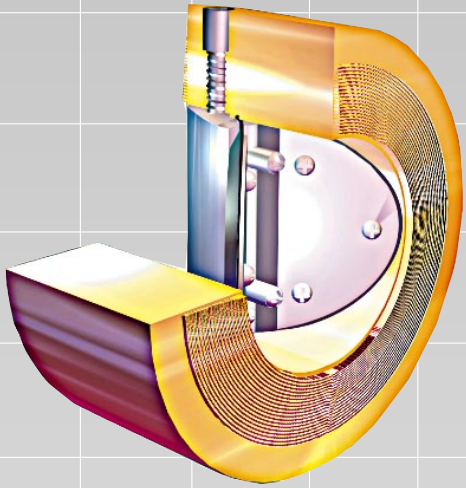

Solid Body Wafer.
(H-Body shown on cover.)

Parts and Description:

Item	Description
1	Body
2	Disc
3	Disc Backup
4	Wing Support
5	Wing Pin
6	Seal
7	Sealing Washer
8	Wing Support Screw
9	Disc Assembly Screw
10	Wing Assembly Screw
11	Spring (Optional)
12	Limiter (5" valves & larger)

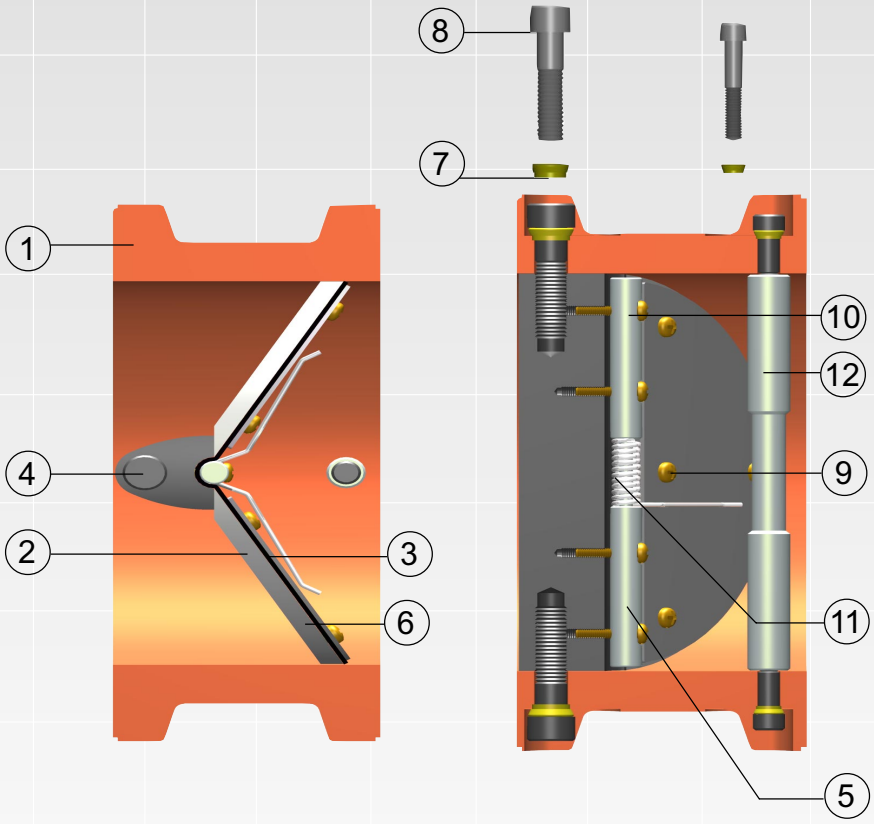

U.S.Valve LLC
168 South Van Brunt St
Englewood NJ 07631
tel: (201) 569 4241
fax: (201) 569 2278
email: info@usvalve.com
website: www.usvalve.com

Pressure Loss Charts:

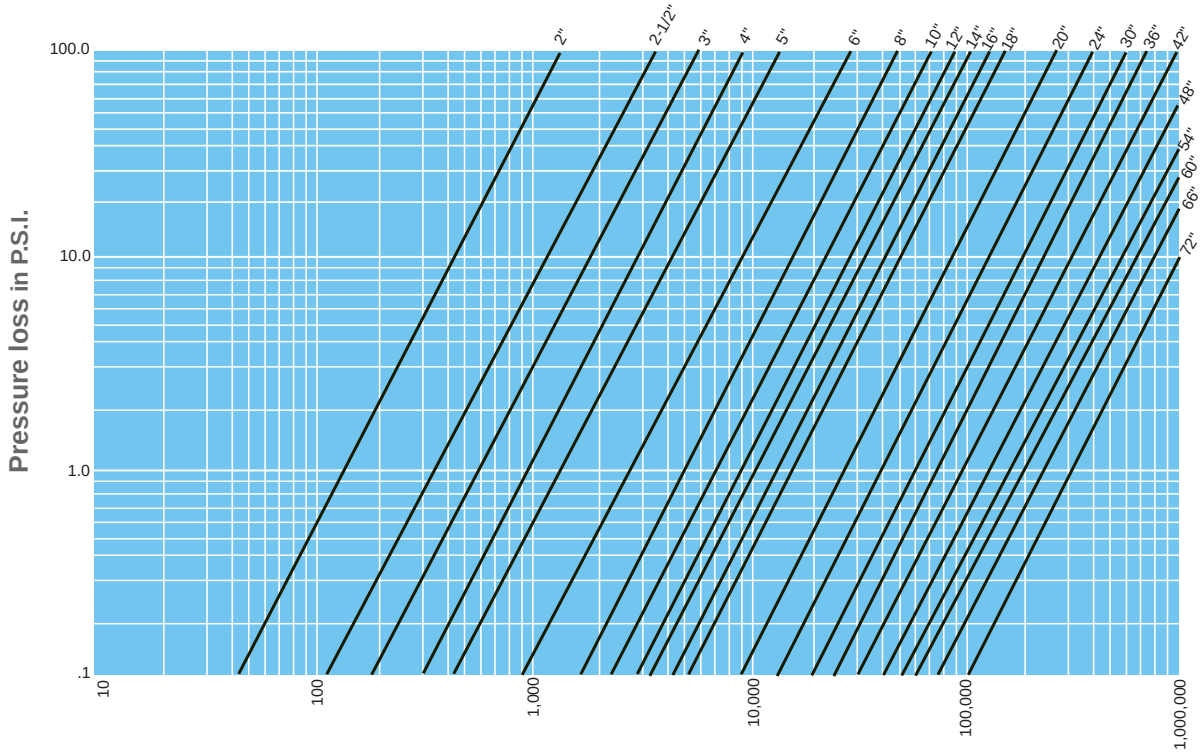

Water Flow - @ 70ºF - GPM

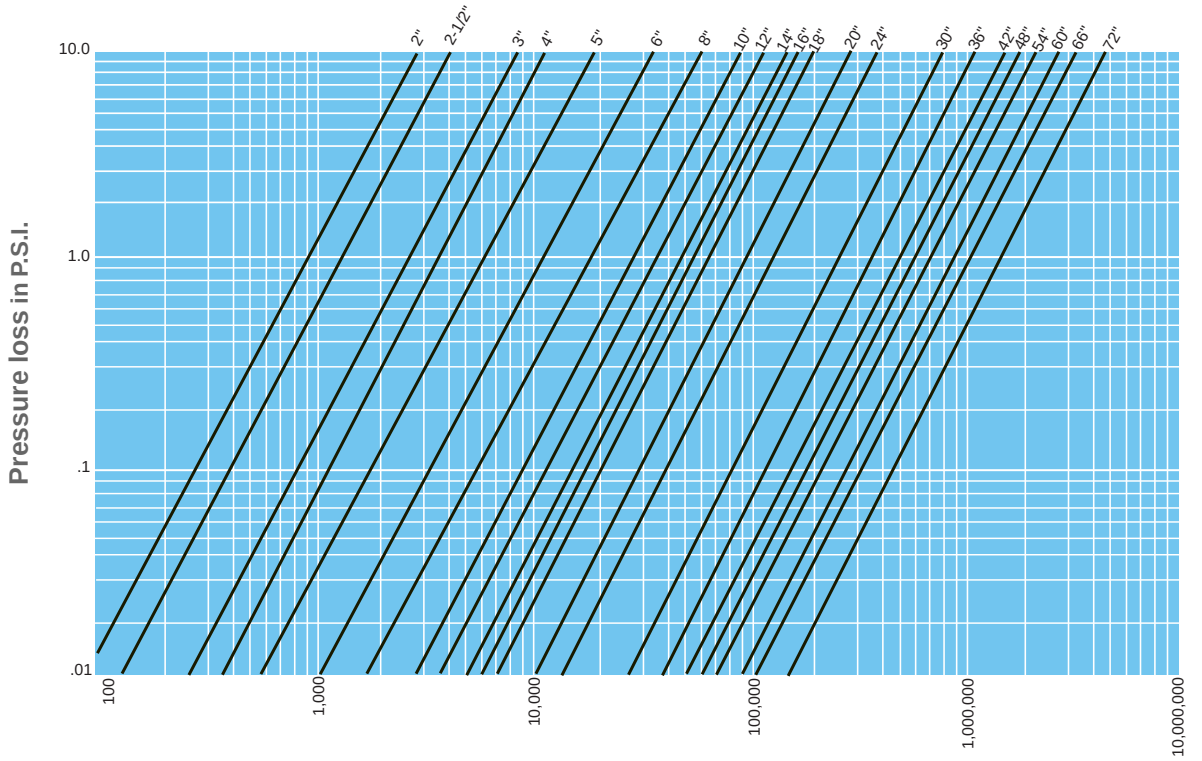

Air Flow - @ 70ºF - SCFM

U.S.Valve LLC
168 South Van Brunt St
Englewood NJ 07631
tel: (201) 569 4241
fax: (201) 569 2278
email: info@usvalve.com
website: www.usvalve.com

US Valve

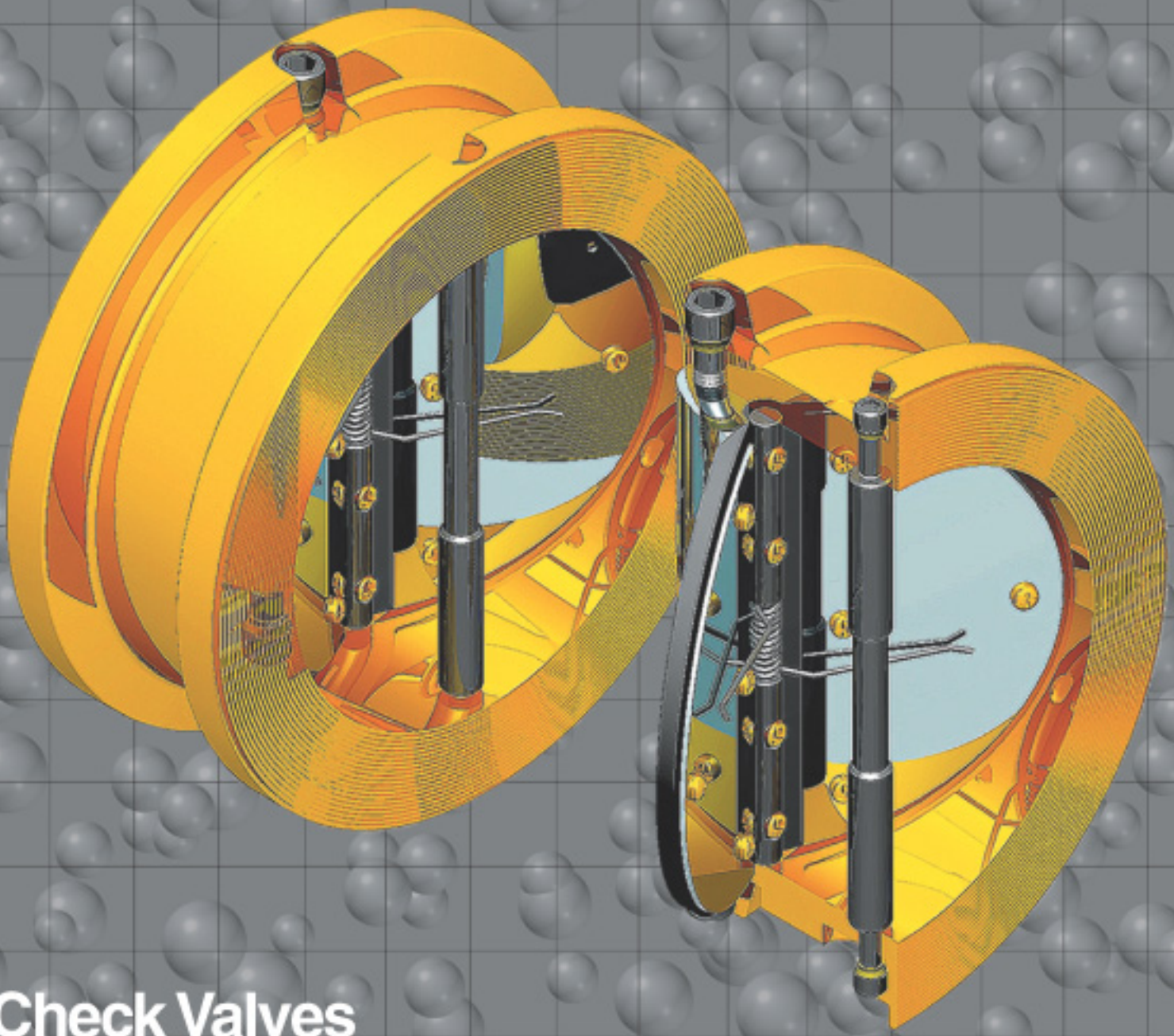

Check Valves

Wafer

Made in the USA

Patent Pending

U.S. Valve

We make high-performance check valves that will double your Cv.[1] If you are looking for the lowest possible pressure loss then our resilient hinged double disc valves are what you need.

Durable

Our unique, air-foil designed wing support conditions the flow profile, resulting in a more laminar, less turbulent flow, thus extending the life of the valve. Our valves consistently out-perform all other products on the market today.

Low Maintenance

A protective coating secures our valves against normal atmospheric corrosion and enhances appearance, making priming and painting unecessary.

Reliable

Each of our valves is individually inspected and tested to ensure performance. Most manufacturers will check only random valves. **We test every, single one.**

Highest Quality

Our designs specify the finest materials engineered specifically for each application. We manufacture all our valves with forged wing supports for superior strength against linear loads, and all wing pins and fasteners are made of 316 stainless steel.

Manufactured by U.S. Valve

Every component is manufactured entirely by U.S. Valve. We control the quality, we control delivery and we keep our prices down.

In Stock

We stock a vast inventory of valves, so most sizes and materials can ship the same day.

[1]The Cv of our high-performance check valves is almost twice that of conventional, metallic-hinge, double door check valves for sizes 2" through 4" and approximately 25% more for sizes 16" through 24".

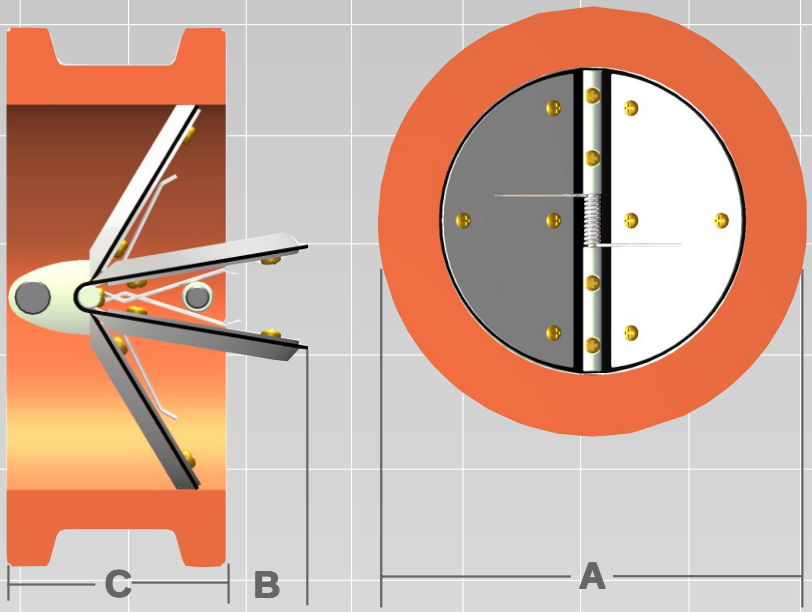

Standard Wafer Models and Materials*

Model	Body	Discs	Wing Support	M.O.P.#
09-0-0	Aluminum ASTM B26 319 or 355 (Solid Body)	Aluminum ASTM B209 6061T6	Forged Aluminum 6061	50 PSI
09-1-0	Carbon Steel ASTM A216Gr.WBC (Solid Body)	Aluminum ASTM B209 6061T6	Forged Aluminum 6061	150 PSI
09-1-4	Carbon Steel ASTM A216Gr.WBC (Solid Body)	Stainless Steel ASTM A240 316	Forged Stainless Steel 316	150 PSI
09-2-0	Cast Iron ASTM 126 Gr.B	Aluminum ASTM B209 6061T6	Forged Aluminum 6061	125 PSI
09-2-3	Cast Iron ASTM 126 Gr.B	Brass ASTM B36 C260	Forged Brass ASTM B124 C377	125 PSI
09-2-4	Cast Iron ASTM 126 Gr.B	Stainless Steel ASTM A240 316	Forged Stainless Steel 316	125 PSI
09-3-3	Brass ASTM B62 Alloy C836 (Solid Body)	Brass ASTM B36 C260	Forged Brass ASTM B124 C377	150 PSI
09-4-4	Stainless Steel Gr. 316 (Solid Body)	Stainless Steel ASTM A240 316	Forged Stainless Steel 316	150 PSI

*All fasteners and spring pins are 316 stainless steel. BUNA-N is standard seal in all valves. Optional seal materials: EPDM, SILICONE, VITON. 316 stainless steel springs are optional for all models. Consult factory for any other special material requirements.

#Max Operating Pressure at 60°F.

Dimensional Data: (inches)

Valve size	A	B	C*
$1^1/_2$	3.3	0.3	1.4
2	4.1	0.5	1.6
$2^1/_2$	4.7	0.6	1.6
3	5.3	0.7	2.3
4	6.7	0.9	2.4
5	7.7	1.1	2.9
6	8.7	1.5	3.4
8	11.0	2.3	4.4
10	13.3	2.5	5.4
12	16.1	3.0	6.4
14	17.7	3.3	7.4
16	20.2	3.8	8.4
18	21.6	4.3	9.4
20	23.7	4.8	10.4
24	28.2	5.8	12.4

Consult factory for larger sizes.

* All "C" dimensions ±.060"

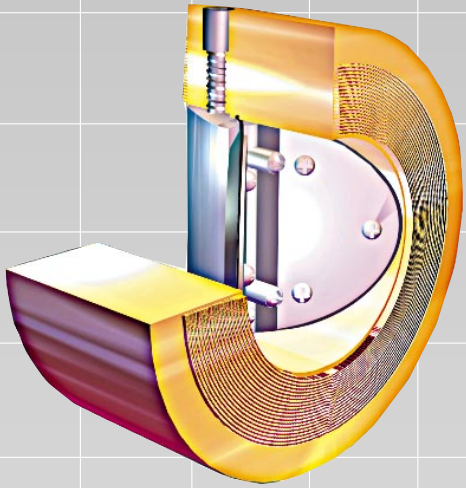

Solid Body Wafer.
(H-Body shown on cover.)

Parts and Description:

Item	Description
1	Body
2	Disc
3	Disc Backup
4	Wing Support
5	Wing Pin
6	Seal
7	Sealing Washer
8	Wing Support Screw
9	Disc Assembly Screw
10	Wing Assembly Screw
11	Spring (Optional)
12	Limiter (5" valves & larger)

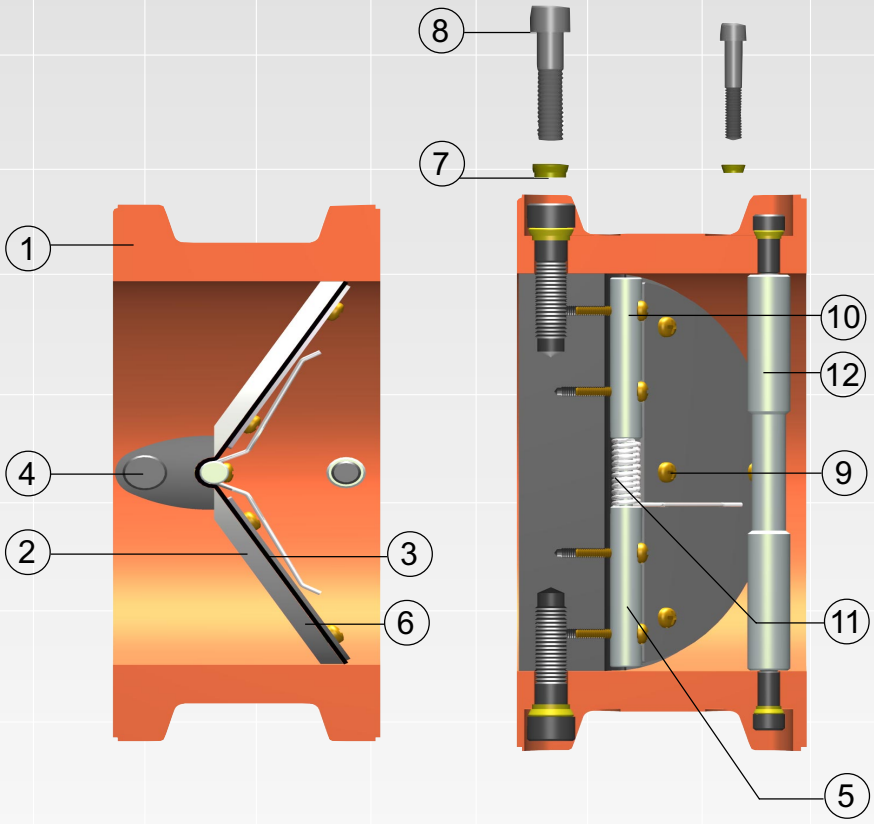

U.S.Valve LLC
168 South Van Brunt St
Englewood NJ 07631
tel: (201) 569 4241
fax: (201) 569 2278
email: info@usvalve.com
website: www.usvalve.com

Pressure Loss Charts:

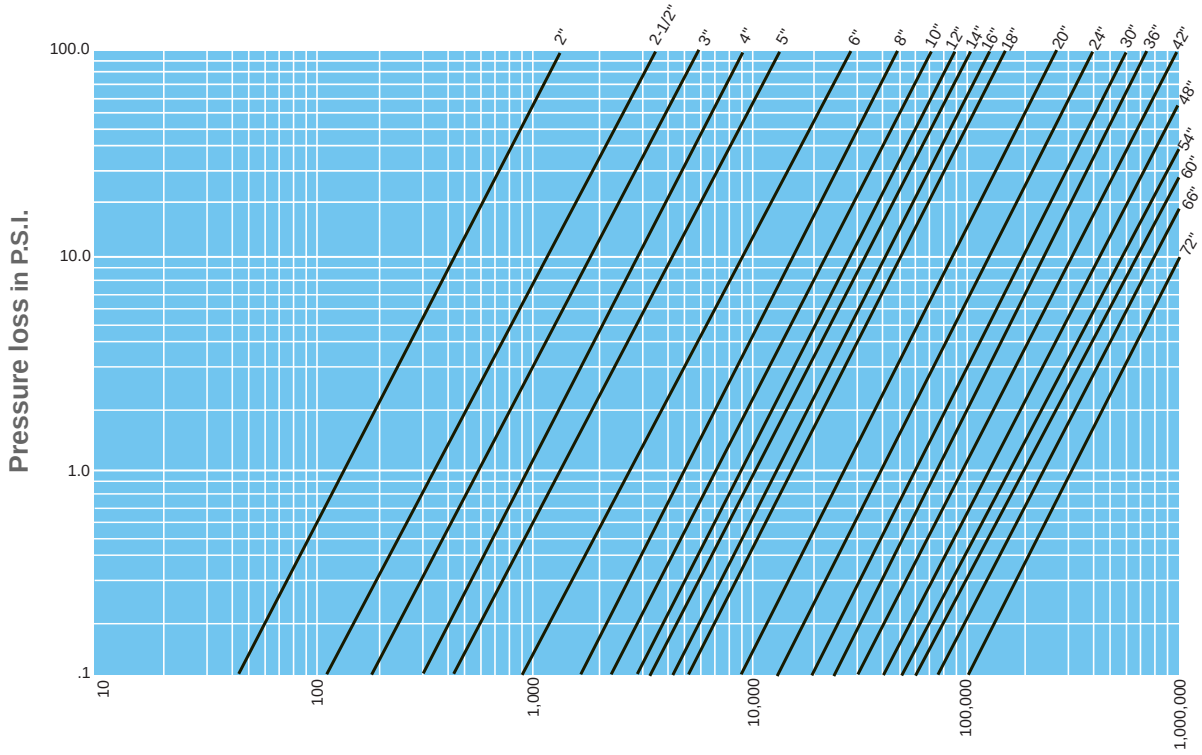

Water Flow - @ 70ºF - GPM

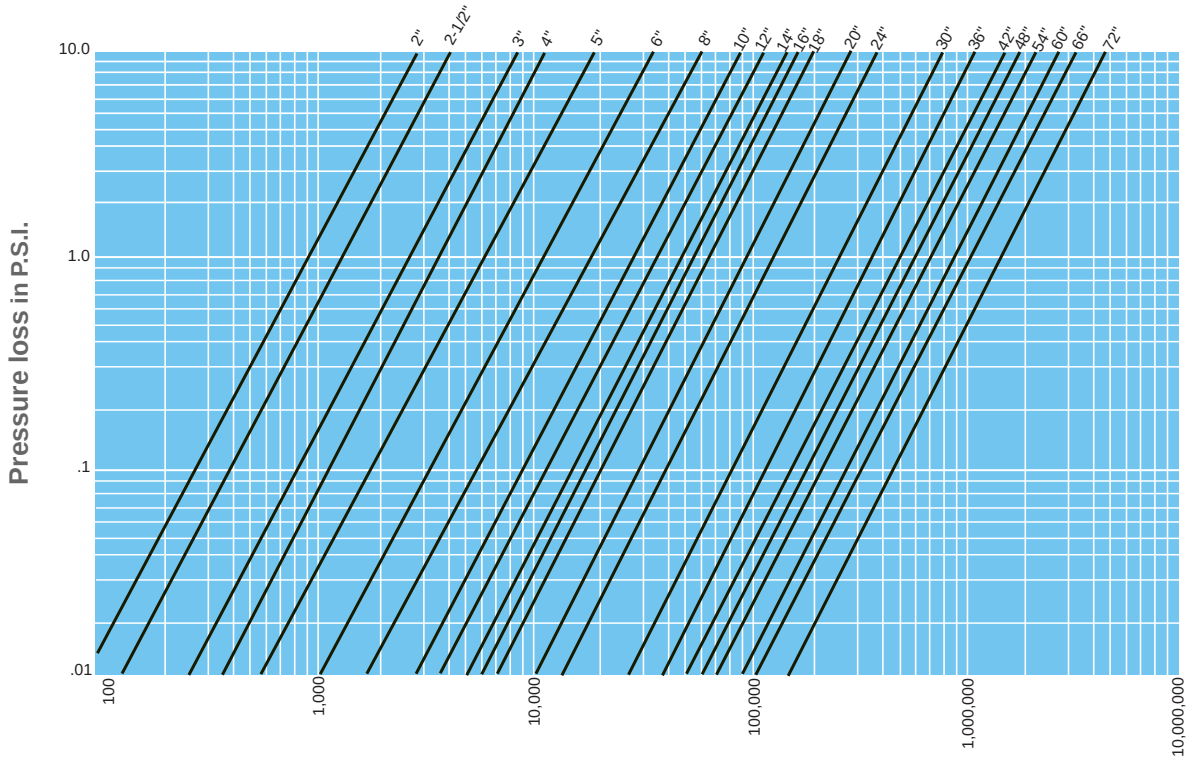

Air Flow - @ 70ºF - SCFM

U.S.Valve LLC
168 South Van Brunt St
Englewood NJ 07631
tel: (201) 569 4241
fax: (201) 569 2278
email: info@usvalve.com
website: www.usvalve.com

U.S. VALVE
168 South Van Brunt St
Englewood NJ 07631
tel (201) 569 4241
fax (201) 569 2278

INSTALLATION INSTRUCTIONS

VALVE INSTALLATION:

1. Remove check valve from packaging and inspect for any shipping damage or loose fasteners. All fasteners have been set with Loctite®. If damaged in shipping, save original box and box contents.
2. If check valve is to be painted or insulated, record the US Valve data on the valve identification tag.
3. If valves are being stored, they should be in a weather-protected area, preferably indoors.
4. Open and close the discs of your valve a few times by hand to assure freedom of movement.
5. **The flow arrow** on your valve indicates the direction of flow upon installation.
6. Use only a **strap type wrench** for installation to prevent distortion of the valve body.
7. The check valve is **not suitable for use on a discharge** of reciprocating or positive displacement compressors or pumps. Pulsating and cyclic flow will damage the valve.
8. **If this valve is installed in a horizontal line,** make sure the screws protruding through the top and bottom of the valve body are in the vertical position. Maintain at least 6 pipe diameters of straight length of piping between the check valve and any other line restriction, i.e. elbows, tees, valves, etc.
9. **If the valve installation is in a vertical line with upward flow,** the position of the wing support is not important. There should be at least 6 pipe diameters of straight unrestricted piping upstream and downstream of the check valve. If space conditions do not allow for this, the valve must be installed so that the flow is equally distributed across the two valve discs *(see figure A below).*

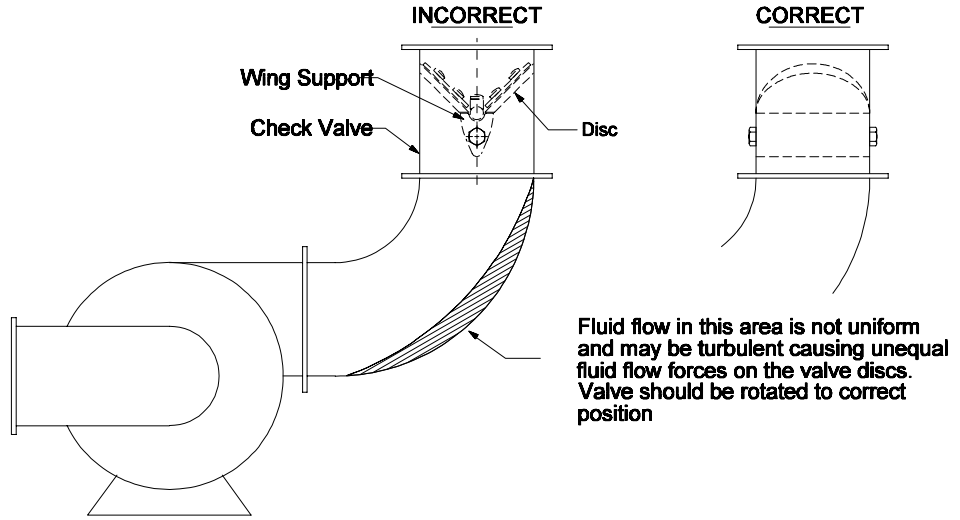

(Figure A)

FOR REPLACEMEMNT OF INTERNALS, SEE REVERSE SIDE →

PARTS REPLACEMENT INSTRUCTIONS

COMPLETE REPLACEMENT OF VALVE INTERNALS:

1. Carefully remove valve from pipeline. **USE ONLY A STRAP TYPE WRENCH.**
2. Hold the valve body in your hand or in a suitable vise to prevent distortion of the valve body.
   NOTE: DO NOT EXERT UNDO FORCE ON THE VALVE BODY. This may permanently effect the valve operation.
3. Remove all valve internals by unscrewing the Wing Support screws *(see Figure 1 below)* and any other body support rods such as travel stop rods (only on large size valves).

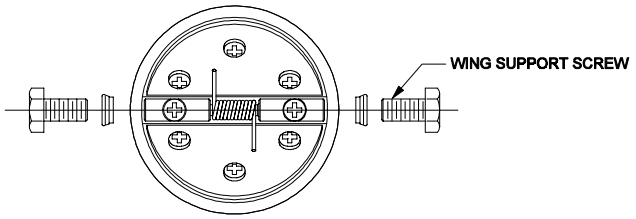

FIGURE 1

4. Inspect the body inside diameter to determine if the body is suitable and retains its original integrity i.e. surface finish is good and roundness apparent.
5. If valve body appears satisfactory and needs only minor cleanup, the valve is then suitable to replace the internals. **DO NOT SANDBLAST OR OTHERWISE DAMAGE THE VALVE BODY'S INNER SURFACE.**
6. Make sure when you order complete internal replacement assemblies that the new assemblies are identical to the original internals. Always reference your check valve's unique serial number when ordering replacements.
7. **Install the new assembly:**
   (a) Put some water on the elastomer seal to act as a lubricant when installing the new wing support assembly into the valve body.
   (b) Make sure you assemble the wing assembly correctly with the direction of flow.
   (c) Align the wing support mounting screw holes and the valve body screw holes properly. *(See Figure 2)*.

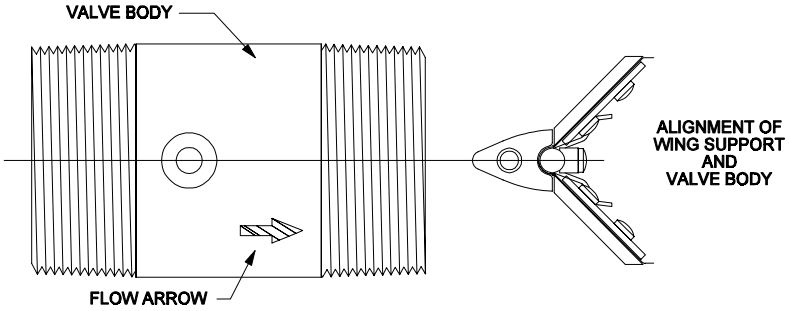

(Figure 2)

   (d) Push wing support assembly into the valve body until the holes line up properly. If you overshoot the hole alignment by half the screw hole diameter, just push the wing support assembly completely through the valve body and repeat the procedure.
   (e) When installing the wing support mounting screws, make sure you install a new Nylite® pressure seal and apply a sufficient amount of Loctite® #242 to the screw threads. The wing support screws should be torqued to 8-ft-lbs for ¼-20 screws and 48 in-lbs for 10-32 screws. Never over tighten screws.
   (f) Allow Loctite® to dry 20 minutes, full cure in 24 hours.

Product Description

The U.S. Valve check valve can be used in most applications where other check valves are in service for both liquids and gases. Check valves are used to prevent reversal of flow in a piping system.

The following is a partial listing of the industries, which use check valves of this type:

Air compressor & vacuum systems	Gas & electrical utilities
Petroleum	Food
Chemical process	Sewage treatment
Water treatment systems	Petroleum
Pneumatic material conveying systems	Heating & cooling systems

The basic valve is light in weight and provides one of the lowest pressure differentials when compared to the other types of check valves. The valve uses an elastomer hinge, which acts as the sealing member. The U.S.Valve is compose of few parts.

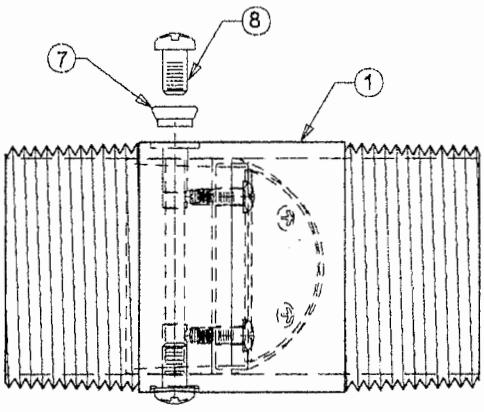

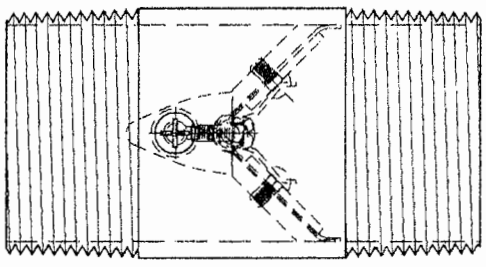

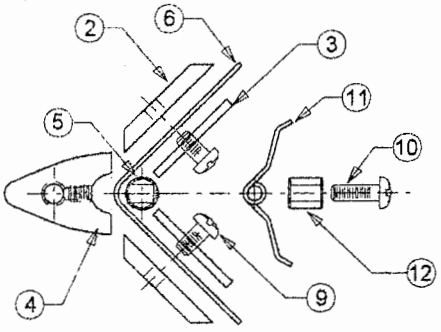

PARTS AND DESCRIPTION	
1	Body
2	Disc
3	Disc Backup
4	Wing Support
5	Wing Pin
6	Seal
7	Sealing Washer
8	Wing Support Screw
9	Disc Assembly Screw
10	Wing Assembly Screw
11	Spring (Optional)
12	Spacer (As Required)

CHECK VALVE SIZING

The proper sizing and installation of the check valve will result in a long and satisfactory service life.

The check valve can be used in both vertical and horizontal piping systems. The valve is suitable for both gaseous and liquid media generally free of particulate matter.

The valve size should be based on certain recommended maximum flow rates and pressure differentials of liquids and gases:

Air	110 feet/sec.	Max. ΔP 0.12
Liquid	12 feet/sec.	Max. ΔP 1.0

As these flow rates increase pressure drop will increase and service life will be shortened.

MATERIALS OF CONSTRUCTION

All the check valves are constructed of high quality materials. The standard valves are all equipped with 316 stainless steel fasteners and wing support pins.

The wing supports are all forged material to provide increased strength. The wing support is designed with an aerodynamic shape to provide smooth flow patterns which decreases flow resistance through the valve. The wing support assembly in its flow open postion provides the greatest open passage for clean low resistance flow.

The various types of material of construction for each type valve can be found in the valve model brochure. The standard check valve does not use a spring for closure but one can be provided if requested. The addition of a spring, depending on the spring rate, will effect the residual opening pressure of the valve.

SEALS

The valve seal is flexible elastomer, which seals against the valve body on closure. Various seal materials are available. The standard check valve contains a Buna-N seal reinforced with nylon cloth.

Temperature °F

Material	Continuous Rating	Major Usage
Buna-N/Nylon	-50 to 200	Air/Water applications Fuel & Oil resistant
Silicone/Fiberglass	-100 to 450	High temperature
EPDM/Nylon	-40 to 250	General use
Viton/Nomex	-20 to 400	High temperature; Chemical resistant

The seal material selected should be properly evaluated by the user and in consultation with U.S.Valve to assure proper performance.

FLUID FLOW

The basic equation for determining the pressure drop through a valve is derived from the following flow equation:

$$Q = \frac{V}{A}$$

V = velocity of fluid FT/SEC

A = open flow area of valve SQFT (from chart)

Q = flow in CUFT/SEC (CFS)

Q can be expressed as GPM = CFS x 448.8

LIQUID PRESSURE DROP

$$Q = C_V \sqrt{\frac{\Delta P}{S_1}}$$

$$\Delta P = \left(\frac{Q}{C_V}\right)^2 S_1$$

C_V = valve coefficient (flow thru valve @ 1 psi ΔP in GPM – see chart)

ΔP = pressure drop across valve – psi

S_1 = specific gravity of liquid relative to water @ 60°F.

Q = flow – GPM

GASEOUS PRESSURE DROP

$$Q_g = 1360\,(C_v)(P_1)\sqrt{\frac{\Delta P}{(S_g)\,t_1\,(P_1)}}$$

Q_g = Gas flow in standard cubic feet/hr – SCFH

$$SCFH = ACFH \left(\frac{P_1}{14.7}\right)\left(\frac{520}{T_1}\right)$$

P_1 = Inlet pressure – psia (psig + 14.7)

ACFH = Actual flow in cubic feet/hr

T_1 = Inlet gas temperature absolute (°F + 460)

C_V = Value coefficient (flow thru valve at 1 psi (ΔP) in GPM)

S_g = Specific gravity of gas = 1.0 for air @ 60°F and 14.7 psi

ΔP = Pressure differential across valve in pounds per square inch – psi

C_V -VALVE COEFFICIENT

Size	C_V valve coefficient (@ ΔP 1 psi)	Valve Cross Section Area FT^2
1	35	.0035
1¼	62	.0071
1½	80	.0081
2	135	.0153
2½	299	.0235
3	582	.0373
4	940	.0702
5	1500	.1015
6	2700	.1557

MOYNO
Always the Right Solution™

SPECIFICATION DATA

MOYNO® 500 PUMPS

300 SERIES

~~331, 332, 333, 344~~, 356 ~~AND 367~~ MODELS

DIMENSIONS

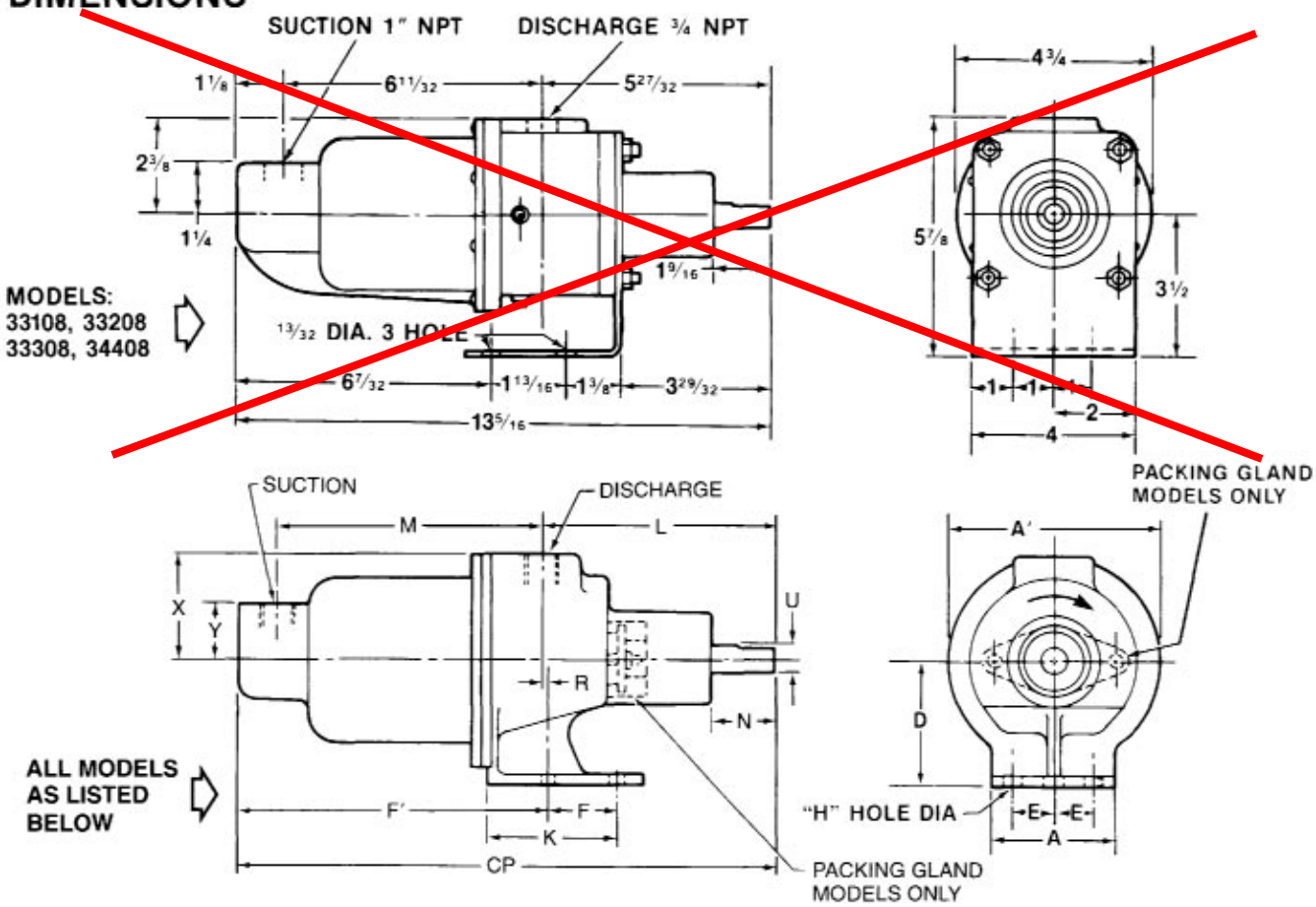

MODELS	CP	A	A[1]	D	E	F	F[1]	H	K	L	M	N	R	U	X	Y	SUCT (NPT)	DISCH (NPT)
33101, 33201 33301, 33104 33204, 33304 34401, 34404	$12\frac{5}{8}$	$3\frac{1}{8}$	$4\frac{3}{4}$	$2\frac{3}{4}$	1	$1\frac{13}{16}$	$6\frac{15}{16}$	$\frac{13}{32}$	$3\frac{1}{32}$	$5\frac{11}{16}$	$6\frac{1}{16}$	$1\frac{7}{16}$	—	$\frac{5}{8}$	$2\frac{3}{8}$	$1\frac{1}{4}$	$\frac{3}{4}$	$\frac{3}{4}$
~~*34411~~	~~$12\frac{15}{16}$~~	~~$3\frac{1}{4}$~~	~~$4\frac{3}{4}$~~	~~$2\frac{3}{4}$~~	~~$1\frac{1}{8}$~~		~~$7\frac{3}{16}$~~	~~$\frac{13}{32}$~~	~~$3\frac{7}{8}$~~	~~7~~	~~$6\frac{1}{16}$~~	~~$1\frac{3}{8}$~~	~~$\frac{1}{4}$~~	~~$\frac{5}{8}$~~	~~$2\frac{5}{16}$~~	~~$1\frac{1}{4}$~~	~~$\frac{3}{4}$~~	~~$\frac{3}{4}$~~
35601, ~~35604~~	$17\frac{1}{2}$	$6\frac{1}{2}$	$7\frac{9}{16}$	$4\frac{9}{32}$	$1\frac{3}{4}$	2	$10\frac{19}{32}$	$\frac{13}{32}$	$4\frac{1}{2}$	$7\frac{3}{8}$	$8\frac{5}{8}$	$2\frac{3}{8}$	$\frac{15}{32}$	$\frac{3}{4}$	$3\frac{25}{32}$	$2\frac{1}{8}$	$1\frac{1}{2}$	$1\frac{1}{4}$
~~*35611, *35615~~	~~$13\frac{3}{8}$~~	~~$6\frac{1}{2}$~~	~~$7\frac{9}{16}$~~	~~$4\frac{9}{32}$~~	~~$1\frac{3}{4}$~~	~~$2\frac{1}{2}$~~	~~$10\frac{19}{32}$~~	~~$\frac{13}{32}$~~	~~4~~	~~$5\frac{11}{32}$~~	~~$8\frac{5}{8}$~~	~~$2\frac{13}{32}$~~	~~$\frac{9}{16}$~~	~~$\frac{3}{4}$~~	~~$3\frac{25}{32}$~~	~~$2\frac{1}{8}$~~	~~$1\frac{1}{2}$~~	~~$1\frac{1}{4}$~~
36701, 36704	$20\frac{15}{16}$	$5\frac{1}{4}$	8	$4\frac{1}{2}$	2	$2\frac{5}{16}$	13	$\frac{9}{16}$	$4\frac{1}{16}$	$7\frac{15}{16}$	$11\frac{3}{16}$	$2\frac{1}{8}$	—	1	4	$2\frac{1}{2}$	2	2

*Packing Gland Model

All dimensions are in inches. Specifications subject to change without notice.

356 and 367 MODELS PERFORMANCE (water at 70°F)

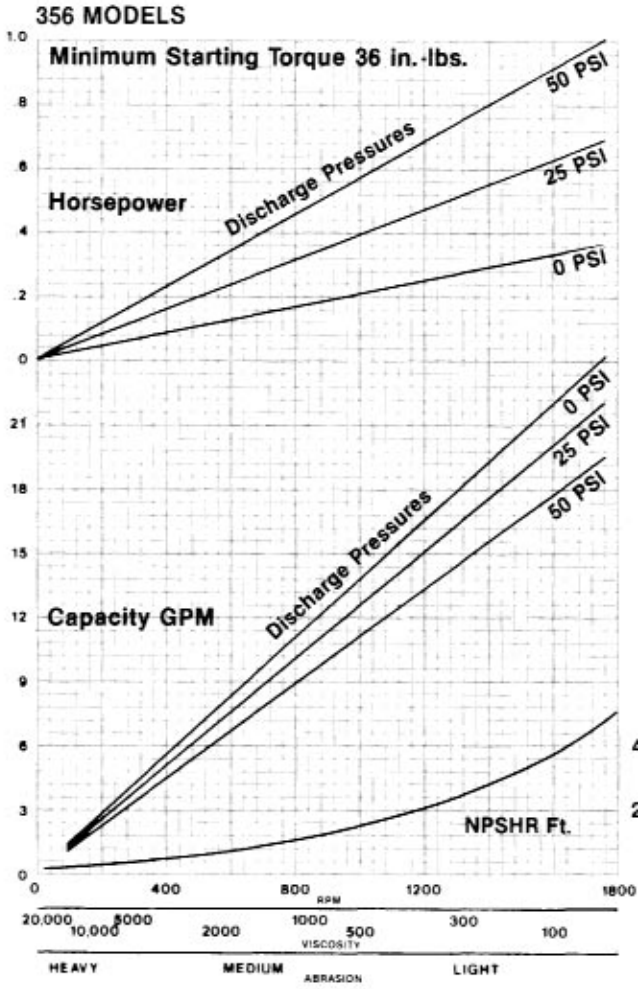

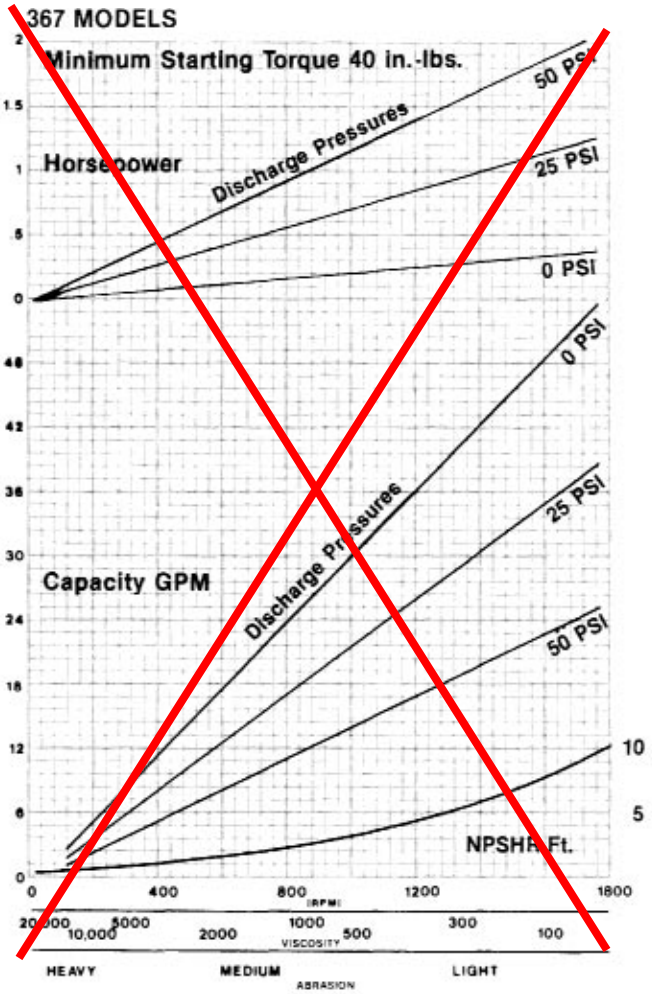

NOTE: For fluids with viscosity over 200 CP (1,000 SSU), pump capacity is reduced by 20%.

MATERIALS OF CONSTRUCTION

COMPONENT	MODELS					
	35601, ~~35611~~		35604, 35613		36701	36704
Housing Rotor Stator	Cast iron 416 SS/CP NBR (Nitrile)		316 SS 316 SS/CP NBR (Nitrile)		Cast iron 416 SS/CP NBR (Nitrile)	316 SS 316 SS/CP NBR (Nitrile)
Weight (lbs)	37	~~40~~	37	40	54	54

CP=Chrome plated

© 1999 by Moyno, Inc.
® Moyno is a registered trademark of Moyno, Inc.

Printed in U.S.A.

MOYNO
Always the Right Solution™

SPECIFICATION DATA

MOYNO® 500 PUMPS

300 SERIES
331, 332, 333, 344, 356 AND 367 MODELS

DIMENSIONS

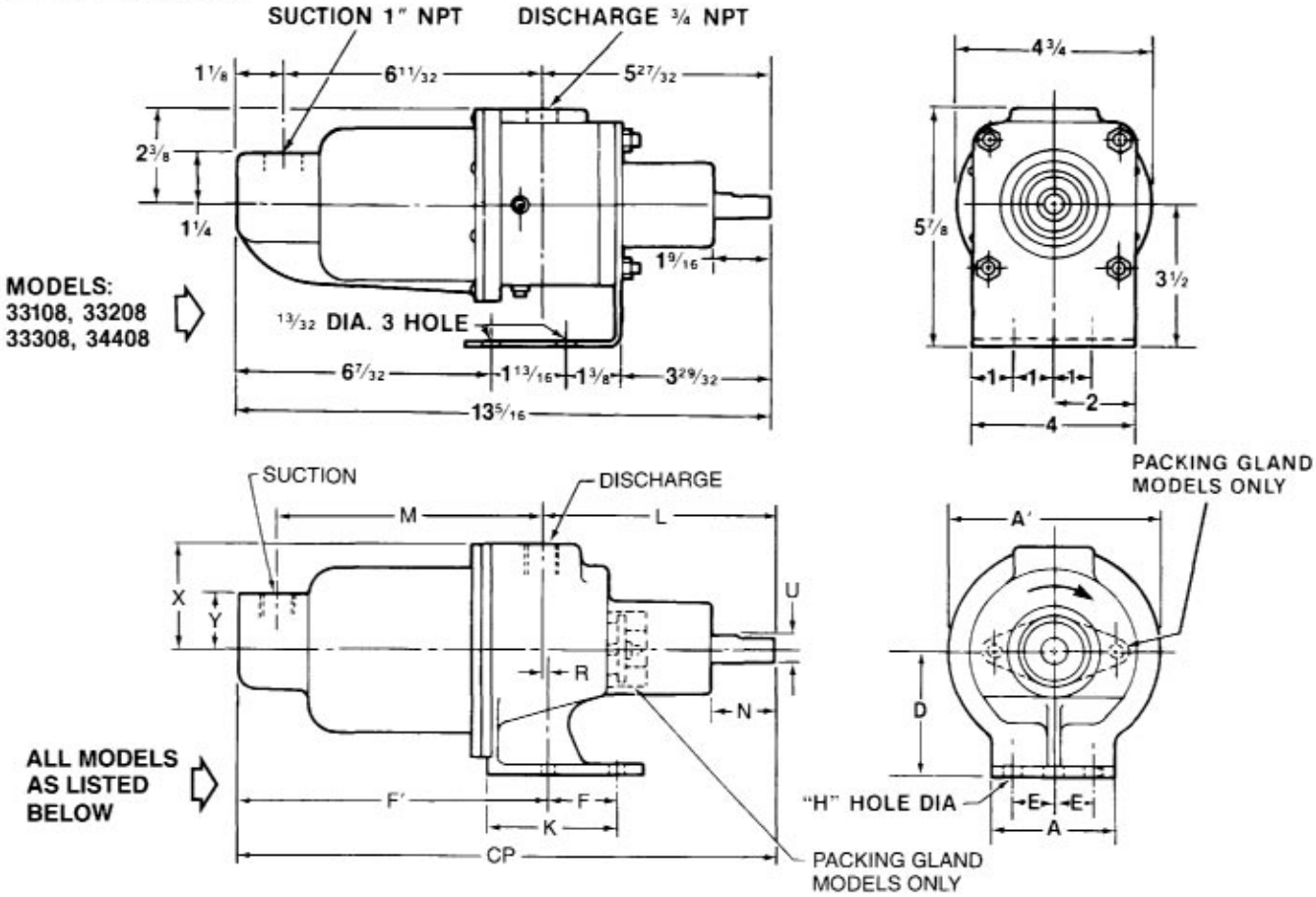

MODELS	CP	A	A[1]	D	E	F	F[1]	H	K	L	M	N	R	U	X	Y	SUCT (NPT)	DISCH (NPT)
33101, 33201 33301, 33104 33204, 33304 34401, 34404	12 5/8	3 1/8	4 3/4	2 3/4	1	1 13/16	6 15/16	13/32	3 1/32	5 11/16	6 1/16	1 7/16	—	5/8	2 3/8	1 1/4	3/4	3/4
*34411	13 15/16	3 1/4	4 3/4	2 3/4	1 1/8	—	7 3/16	13/32	2 7/8	7	6 1/16	1 3/8	1/4	5/8	2 5/16	1 1/4	3/4	3/4
35601, 35604	17 1/2	6 1/2	7 9/16	4 9/32	1 3/4	2	10 19/32	13/32	4 1/2	7 3/8	8 5/8	2 3/8	15/32	3/4	3 25/32	2 1/8	1 1/2	1 1/4
*35611, *35613	19 3/8	6 1/2	7 9/16	4 9/32	1 3/4	2 1/2	10 19/32	13/32	4	9 11/32	8 5/8	2 13/32	9/16	3/4	3 25/32	2 1/8	1 1/2	1 1/4
36701, 36704	20 15/16	5 1/4	8	4 1/2	2	2 5/16	13	9/16	4 1/16	7 15/16	11 3/16	2 1/8	—	1	4	2 1/2	2	2

*Packing Gland Model

All dimensions are in inches. Specifications subject to change without notice.

331, 332, 333 and 344 MODELS
PERFORMANCE (water at 70ºF)

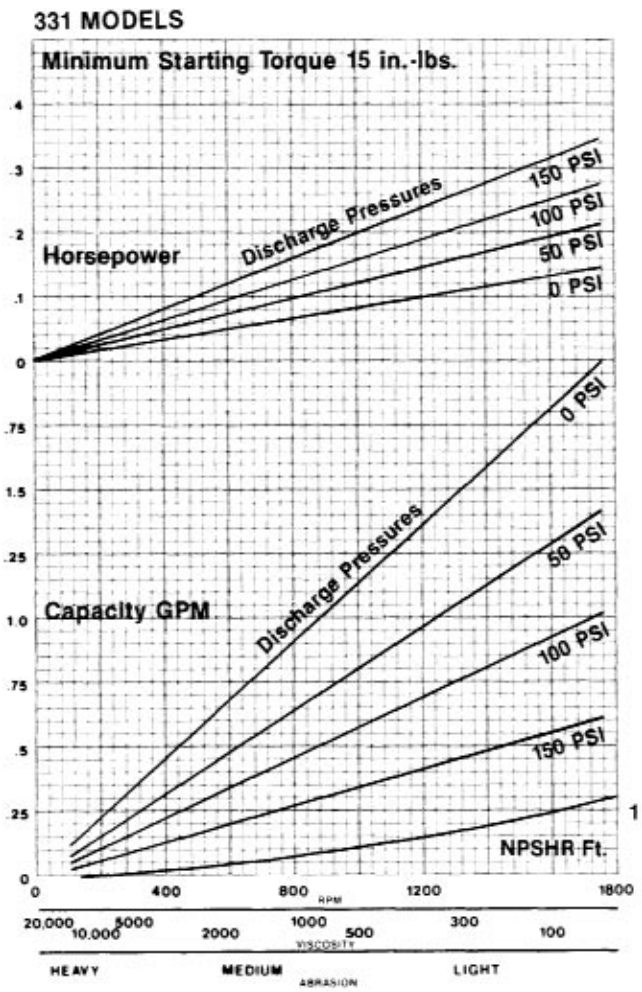

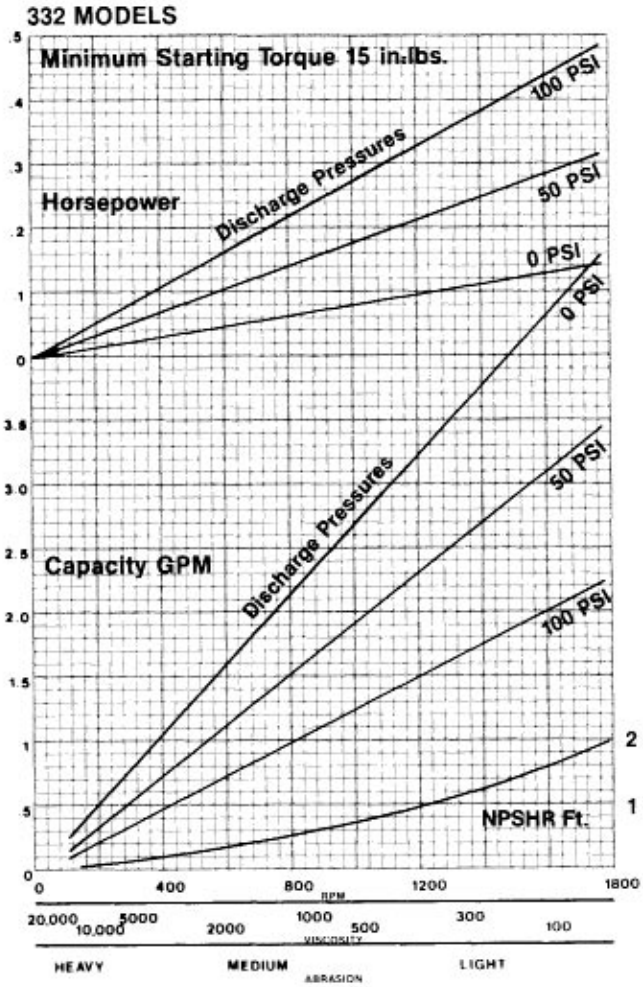

NOTE: For fluids with viscosity over 200 CP (1000 SSU), pump capacity is reduced by 20%.

MATERIALS OF CONSTRUCTION

COMPONENT	MODELS			
	33101, 33201 33301, 34401	33104, 33204 33304, 34404	33108, 33208 33308, 34408	*34411
Housing	Cast iron	316 SS	Nylon	Cast iron
Rotor	416 SS/CP	316 SS/CP	416 SS/CP	416 SS/CP
Stator	NBR (Nitrile)	NBR (Nitrile)	NBR (Nitrile)	NBR (Nitrile)
Weight (lbs)	16	16	8	16

* Packing Gland Model
CP = Chrome plated

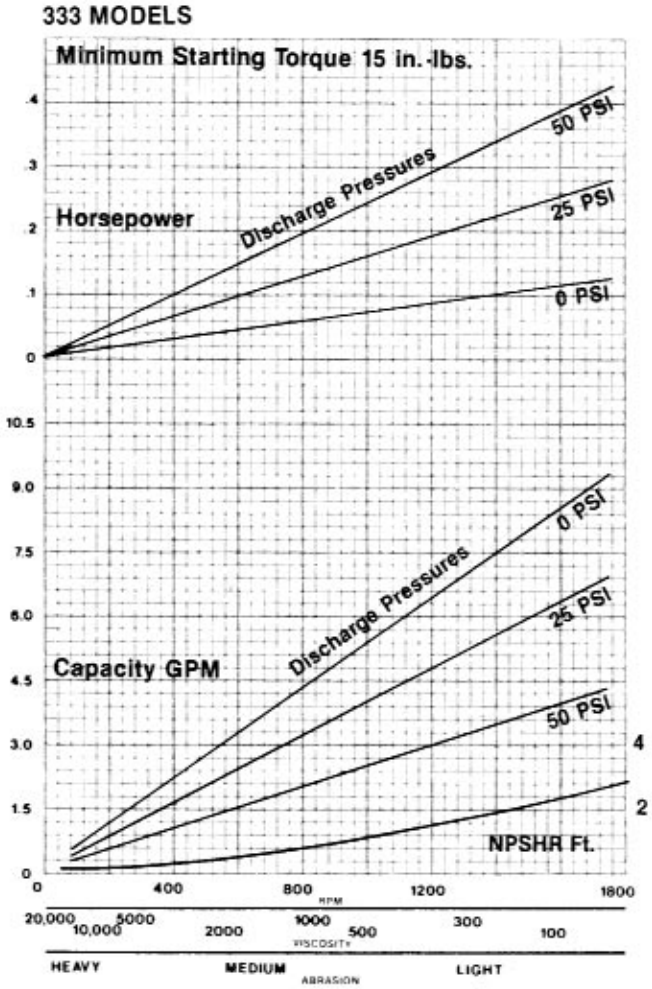

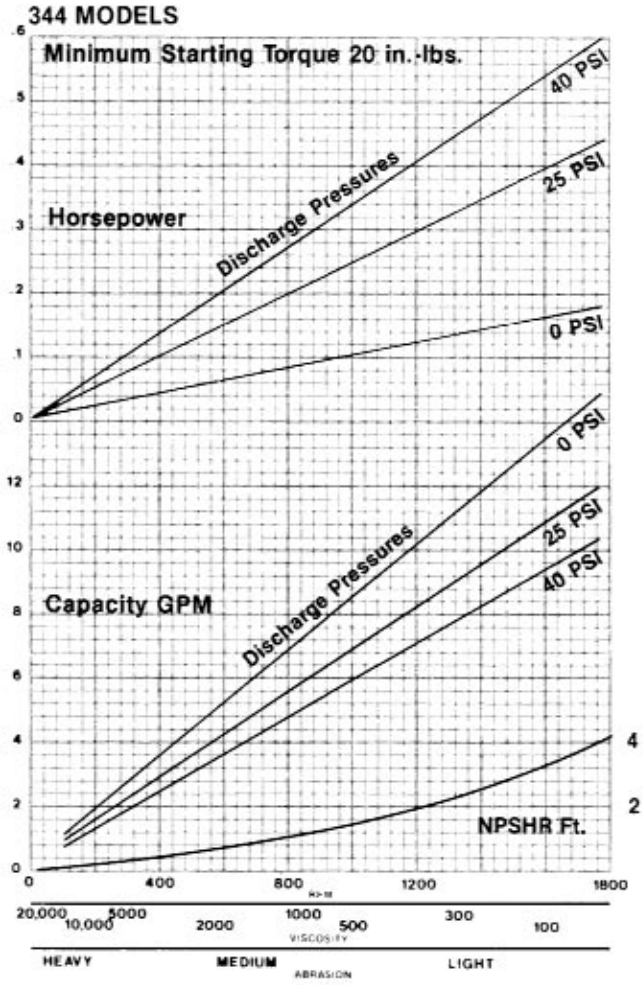

NOTE: For fluids with viscosity over 200 CP (1000 SSU), pump capacity is reduced by 20%.

356 and 367 MODELS PERFORMANCE (water at 70°F)

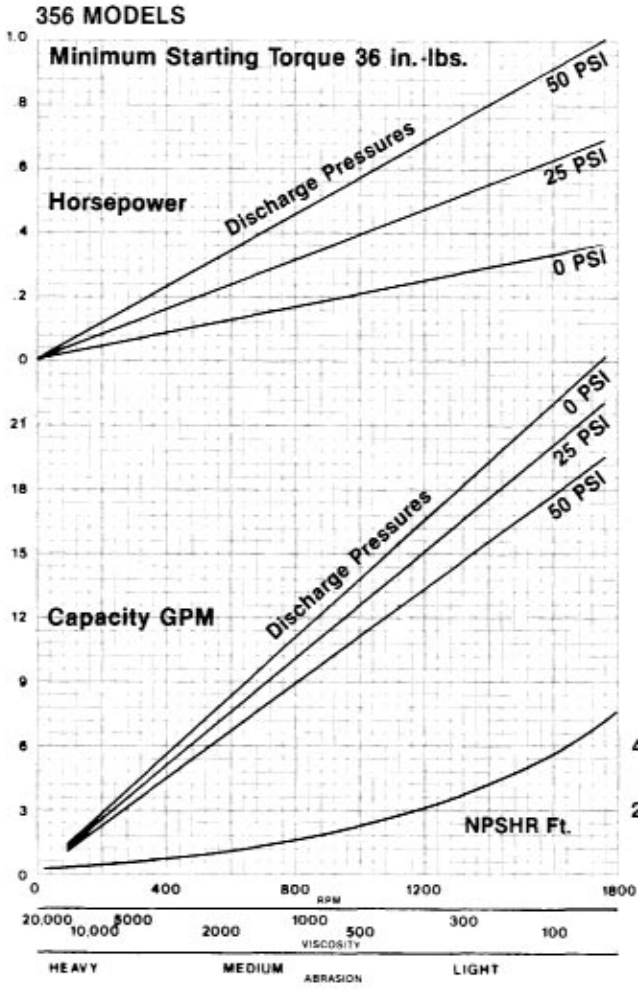

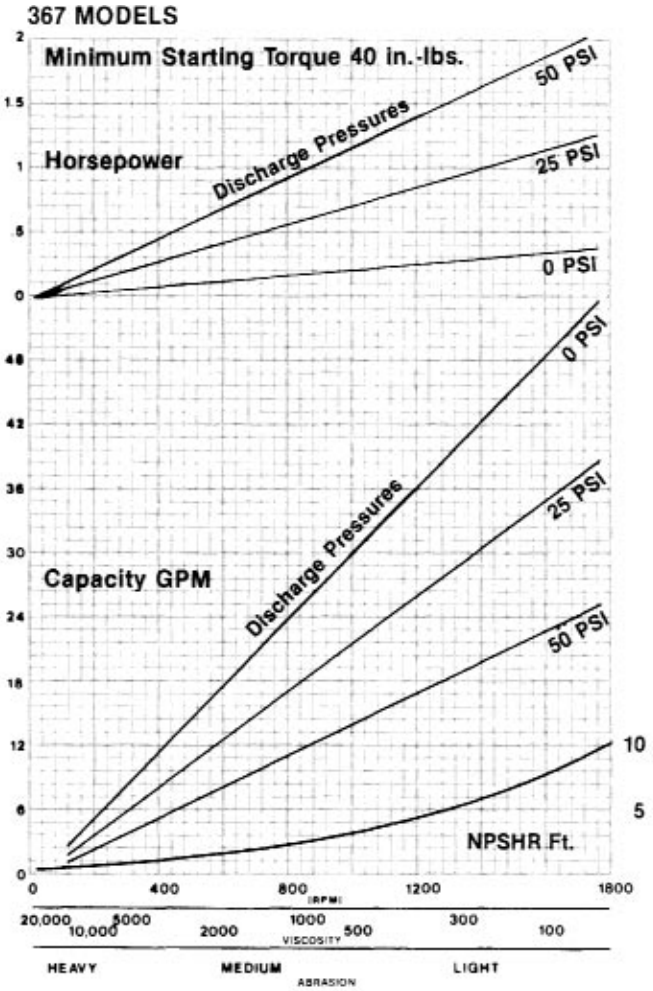

NOTE: For fluids with viscosity over 200 CP (1,000 SSU), pump capacity is reduced by 20%.

MATERIALS OF CONSTRUCTION

COMPONENT	MODELS					
	35601, 35611		35604, 35613		36701	36704
Housing	Cast iron		316 SS		Cast iron	316 SS
Rotor	416 SS/CP		316 SS/CP		416 SS/CP	316 SS/CP
Stator	NBR (Nitrile)		NBR (Nitrile)		NBR (Nitrile)	NBR (Nitrile)
Weight (lbs)	37	40	37	40	54	54

CP=Chrome plated

© 1999 by Moyno, Inc.
® Moyno is a registered trademark of Moyno, Inc.

Printed in U.S.A.

MOYNO
Always the Right Solution™

SERVICE MANUAL

MOYNO® 500 PUMPS

300 SERIES
331, 332, 333, 344, 356 AND 367 MODELS

Mechanical Seal Models

Packing Gland Models

DESIGN FEATURES	MODELS				
	33101 34401 33201 35601 33301 36701	**33104 34404 33204 35604 33304 36704**	**33108 33308 33208 34408**	**34411 35611**	**35613**
Housing:	Cast Iron	AISI 316 SS	Nylon	Cast Iron	AISI 316 SS
Pump Rotor:	Chrome plated 416 SS	Chrome plated 316 SS	Chrome plated 416 SS	Chrome plated 416 SS	Chrome plated 316 SS
Pump Stator:	NBR (Nitrile)	NBR (Nitrile)	NBR (Nitrile)	NBR (Nitrile)	NBR (Nitrile)
Shaft:	416 SS	316 SS	416 SS	416 SS	316 SS
Flexible Joint:	Carbon steel/ NBR	316 SS/ NBR	Carbon steel/ NBR	Carbon steel/ NBR	316 SS/ NBR
Bearings:	Ball (sealed)	Ball (sealed)	Ball (sealed)	Ball (sealed)	Ball (sealed)
Mechanical Seal:	Carbon-ceramic	Carbon-ceramic	Carbon-ceramic	---	---
Packing:	---	---	---	Braided PTFE	Braided PTFE

Note: Alternate elastomers available. Refer to Repair/Conversion kit numbers, page 8.

INSTALLATION

Mounting Position. Pump may be mounted in any position. When mounting vertically, it is necessary to keep bearings above seals to prevent possible seal leakage into bearings.

Pre-Wetting. Prior to connecting pump, wet pump elements and mechanical seal or packing by adding fluid to be pumped into suction and discharge ports. Turn shaft over several times in a clockwise direction to work fluid into elements.

Piping. Piping to pump should be self-supporting to avoid excessive strain on pump housings. See Table 1 for suction and discharge port sizes of each pump model. Use pipe “dope” or tape to facilitate disassembly and to provide seal.

Drive. On belt driven units, adjust belt tension to point of non-slip. Do not overtighten.

On direct drive units, coupling components should be aligned and spaced at least 1/16” apart.

Pump rotation must be clockwise when facing shaft to prevent damage to pump. Check direction of rotation before startup.

Water Flush of Packing (356 Models Only). The packing may be either grease lubricated through a grease fitting in the stuffing box or have plumbing connected to the housing to allow a water flush.

Maximum speed is 1750 rpm.

When the material being pumped is abrasive in nature, it may be advantageous to flush the packing to prevent leakage under packing and excessive shaft wear.

Clean water can be injected through a 1/8" NPT tapped hole that normally houses the grease fitting for lubricating the packing. The water can be permitted to leak axially along the shaft in either direction or can be removed from the second tapped hole in the stuffing box. In both cases, the discharge from the stuffing box should be throttled slightly to maintain 10-15 PSI higher pressure in the stuffing box than is present in the discharge housing.

Table 1. Pump Data

Pump Models	331	332	333	344	356	367
Suction Port (NPT)	3/4*	*3/4**	*3/4**	3/4*	1-1/2	2
Discharge Port (NPT)	3/4	3/4	3/4	3/4	1-1/4	2
Discharge Pressure (psig)	150	100	50	40	50	50

*08 versions = 1" NPT

Table 2. Temperature Limits

Elastomer	Temperature Limits
*NBR	10°-160°F
*EPDM	10°-210°F
*FPM	10°-240°F

*NBR = Nitrile
*EPDM = Ethylene-Propylene-Diene Terpolymer
*FPM = Fluoroelastomer

OPERATION

Self-Priming. With wetted pumping elements, the pump is capable of 25 feet of suction lift when operating at 1750 rpm with pipe size equal to port size.

DO NOT RUN DRY. Unit depends on liquid pumped for lubrication. For proper lubrication, flow rate should be at least 10% of rated capacity.

Pressure and Temperature Limits. See Table 1 for maximum discharge pressure of each model. Unit is suitable for service at temperatures shown in Table 2.

Storage. Always drain pump for extended storage periods by removing suction housing bolts and loosening suction housing.

TROUBLE SHOOTING

WARNING: Before making adjustments, disconnect power source and thoroughly bleed pressure from system. Failure to do so could result in electric shock or serious bodily harm.

Failure To Pump.

1. Belt or coupling slip: Adjust belt tension or tighten set screw on coupling.
2. Stator torn; possibly excessive pressure: Replace stator, check pressure at discharge port.
3. Wrong rotation: Rotation must be clockwise when facing shaft.
4. Threads in rotor or on shaft stripped: Replace part. Check for proper rotation.
5. Excessive suction lift or vacuum.

Pump Overloads.

1. Excessive discharge pressure: Check discharge pressure for maximum rating given in Table 1. Check for obstruction in discharge pipe.
2. Fluid viscosity too high: Limit fluid viscosity to 20,000 CP or 100,000 SSU.

Viscosity CP	Limit RPM
1-300	1750
300-1,000	1200
1,000-2,000	700
2,000-5,000	350
5,000-10,000	180
10,000-20,000	100

3. Insufficient motor HP: Check HP requirement.

Noisy Operation.

1. Starved suction: Check fluid supply, length of suction line, and obstructions in pipe.
2. Bearings worn: Replace parts; check alignment, belt tension, pressure at discharge port.
3. Broken flexible joint: Replace part, check pressure at discharge port.
4. Insufficient mounting: Mount to be secure to firm base. Vibration induced noise can be reduced by using mount pads and short sections of hose on suction and discharge ports.

Mechanical Seal Leakage (Mechanical Seal Models Only).

1. Leakage at startup: If leakage is slight, allow pump to run several hours to let faces run in.
2. Persistent seal leakage: Faces may be cracked from freezing or thermal shock. Replace seal.

Packing Leakage (Packing Models Only).

1. Leakage at startup: Adjust packing as outlined in maintenance instructions.

Note: Slight leakage is necessary for lubrication of packing.

2. Persistent leakage: Packing rings and/or shaft may be worn. Replace parts as required.

Pump Will Not Prime.

1. Air leak on suction side: Check pipe connections.

MAINTENANCE

General. These pumps have been designed for a minimum of maintenance, the extent of which is routine lubrication and adjustment of packing. The pump is one of the easiest to work on in that the main elements are very accessible and require few tools to disassemble.

Packing Lubrication (356 Models Only). The zerk fitting on the side of the suction housing leads to the lantern ring halves in the mid-section of the packings. At least once a week, inject a small quantity of good quality grease, such as MPG-2 Multi Purpose Grease (Du Bois Chemical), or equivalent, into the zerk fitting to lubricate the packings.

Note: For Model 34411, lubricate packing by applying a liberal amount of grease during assembly.

Packing Adjustment (Packing Models Only). Packing gland attaching nuts should be evenly adjusted so they are little more than finger tight. Over-tightening of the packing gland may result in premature packing failure and possible damage to the shaft and gland.

When the packing is new, frequent minor adjustments are recommended for the first few hours of operation in order to compress and seat the packing. Be sure to allow slight leakage for lubrication of packing.

When excessive leakage can no longer be regulated by tightening the gland nuts, remove and replace the packings in accordance with the DISASSEMBLY and REASSEMBLY instructions. The entire pump need not be disassembled to replace the packings.

Bearing Lubrication. The prelubricated, fully sealed bearings do not require additional lubrication.

PUMP DISASSEMBLY

WARNING: Before disassembling pump, disconnect power source and thoroughly bleed pressure from system. Failure to do so could result in electric shock or serious bodily harm.

To Disassemble Mechanical Seal Models:

1. Disconnect suction and discharge piping.
2. Remove screws (112) holding suction housing (2) to pump body (1). Remove suction housing and stator (21).
3. Remove rotor (22) from flexible joint (24) by turning counter-clockwise (RH thread). Use 3/16 inch diameter punch to remove rotor pin (45) on Model 36701.
4. Flexible joint (24) can be removed from shaft (26) by using a 3/16 inch allen wrench in end of joint (1/4 inch wrench on 356 Models) and turn counter-clockwise. Use 3/16 inch diameter punch to remove shaft pin (46) on Model 36701.
5. Carefully slide mechanical seal (69) off shaft (26). Carefully pry seal seat out of pump body (1). If any parts of mechanical seal are worn or broken, the complete seal assembly should be replaced. Seal components are matched parts and are not interchangeable.
6. The bearings (29) and shaft (26) assembly can be removed from pump body (1) after snap ring (66) has been removed. To remove the assembly, lightly tap the shaft at threaded end using a block of wood to protect the threads. The bearings may be pressed off the shaft.

To Disassemble Packing Models:

1. Disconnect suction and discharge piping.
2. Remove screws (112) which hold suction housing (2) to pump body (1). Remove suction housing and stator (21).
3. Remove rotor (22) from flexible joint (24) by turning in a counter-clockwise direction (RH thread).
4. Flexible joint (24) can be removed by using a 3/16 inch allen wrench in end of joint (1/4 inch wrench on 356 Models) and turn in a counter-clockwise direction.
5. The packing (42) can be removed without removing the shaft (26) using the following procedure:
   a. Remove gland bolts (47).
   b. Slide gland (41) away from packing (42).
   c. Pull out packing (42) (and lantern ring halves (57) on 356 Models) using a packing removing tool.

   Note: Packing can be removed after shaft has been removed by pushing out from pump side of pump body after gland (41) has been detached.
6. The bearings (29) and shaft (26) assembly can be removed from pump body (1) after snap ring (66) has been removed. To remove the assembly, lightly tap the shaft at threaded end using a block of wood to protect the threads.
7. To disassemble shaft assembly, remove snap ring (66A) from shaft (26) and press bearings (29) and bearing spacer (33) off the shaft.

PUMP ASSEMBLY

To Assemble Mechanical Seal Models:

1. Press bearings (29) on shaft (26), and locate slinger ring (77) near bearing on threaded end of shaft.

Note: When replacing bearings, always press on the inner race when assembling to shaft, and on the outer race when pressing bearings into the housings.

2. Press shaft assembly into pump body (1) securing with snap ring (66).
3. Install mechanical seal (69) using the following procedure:
   a. Clean and oil sealing faces using a clean light oil (not grease).

   Caution: Do not use oil on EPDM parts. Substitute glycerin or soap and water.

   b. Oil the outer surface of the seal seat, and push the assembly into the bore in the pump body (1), seating it firmly and squarely.
   c. After cleaning and oiling the shaft, slide the seal body along the shaft until it meets the seal seat.
   d. Install seal spring and spring retainer on shaft.
4. Thread flexible joint (24) into shaft (26) in a clockwise direction (RH thread). On 356 Models, install seal spacer (69A) and washer (116) before threading flexible joint onto shaft in a clockwise direction. On Model 36701, use shaft pin (46) to pin flexible joint (24) to shaft.
5. Thread rotor (22) onto flexible joint (24) in a clockwise direction (RH thread). On Model 36701, pin rotor (22) to joint using rotor pin (45).
6. Slide stator (21) on rotor (22). On 331 and 332 Models, insert rounded end of stator ring (135) into end of stator prior to installing stator on rotor.
7. Secure stator (21) and suction housing (2), with suction port vertically up, to pump body (1) using screws (112).
8. Proceed as in installation instructions.

To Assemble Packing Models:

1. Press bearings (29), with bearing spacer (33) in between, on shaft (26) and secure in place using snap ring (66A).

Note: When replacing bearings, always press on the inner race when assembling to shaft, and on the outer race when pressing bearings into the housings.

2. Install packing (42) before installing shaft assembly using the following procedure:
   a. Lubricate each individual ring of packing with a grease that is insoluble in the fluid being pumped.
   b. Individually assemble each ring of packing loosely in the packing chamber of the pump body (1). Stagger splits on rings. (Four rings, 3/16 inch square required on Model 34411; four rings, 1/4 inch square and two lantern ring halves (57) assembled between two rings on 356 Models).
   c. Loosely install packing gland (41) on pump body (1) using gland bolts (47).
3. Press shaft assembly into pump body (1) positioning slinger ring (77) between packing gland (41) and bearing end of pump body. Secure the shaft assembly with snap ring (66).
4. Thread flexible joint (24) into shaft (26) in a clockwise direction (RH thread).
5. Thread rotor (22) onto flexible joint (24) in a clockwise direction (RH thread).
6. Slide stator (21) on rotor (22). On 331 and 332 Models, insert rounded end of stator ring (135) into end of stator prior to installing stator on rotor.
7. Secure stator (21) and suction housing (2), with suction port vertically up, to pump body (1) using screws (112).
8. Proceed as in installation instructions.

Note: Adjust newly installed packing as described in maintenance procedure.

WARNING: Replace belt or coupling guards before reconnecting power.

When ordering parts, please specify pump model number, pump serial number, part number, part description and quantity.

MECHANICAL SEAL MODELS

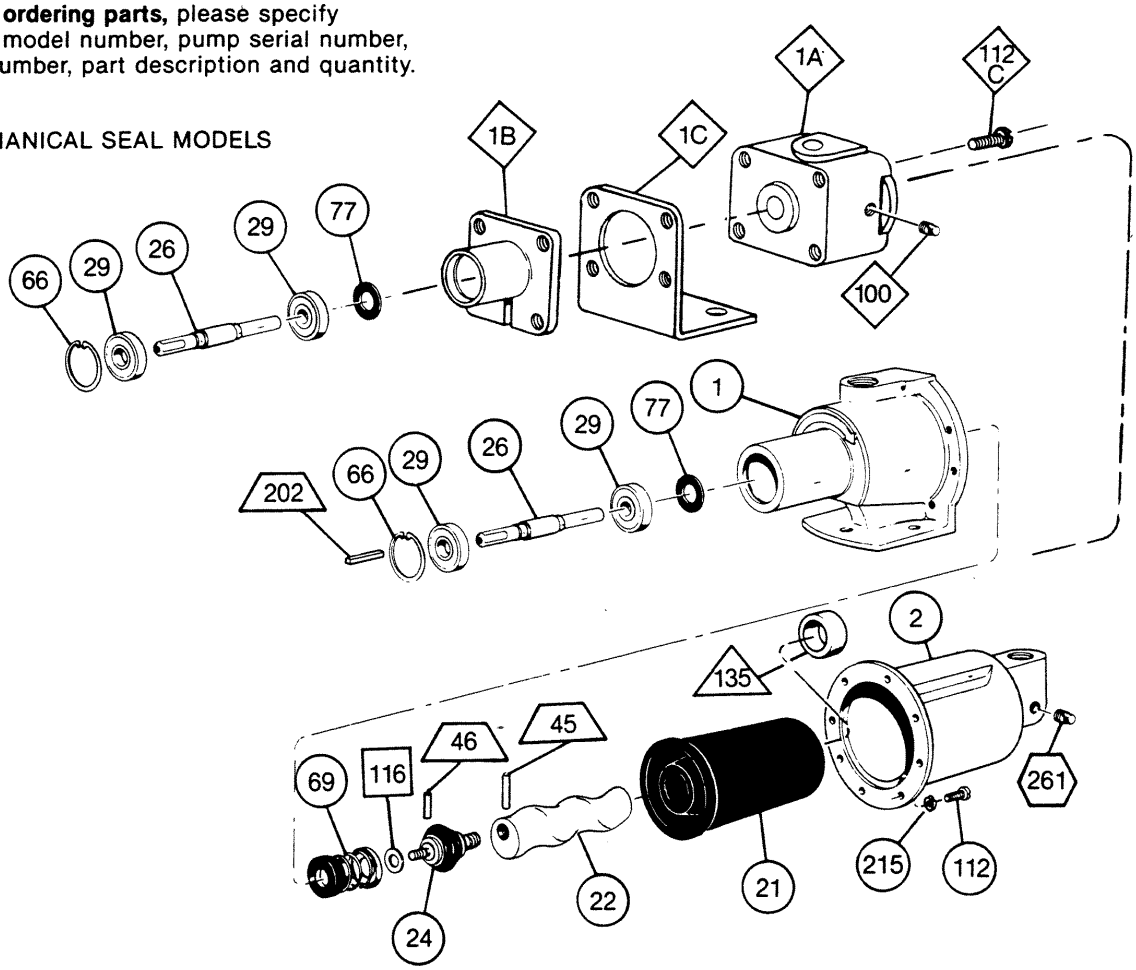

PACKING MODELS

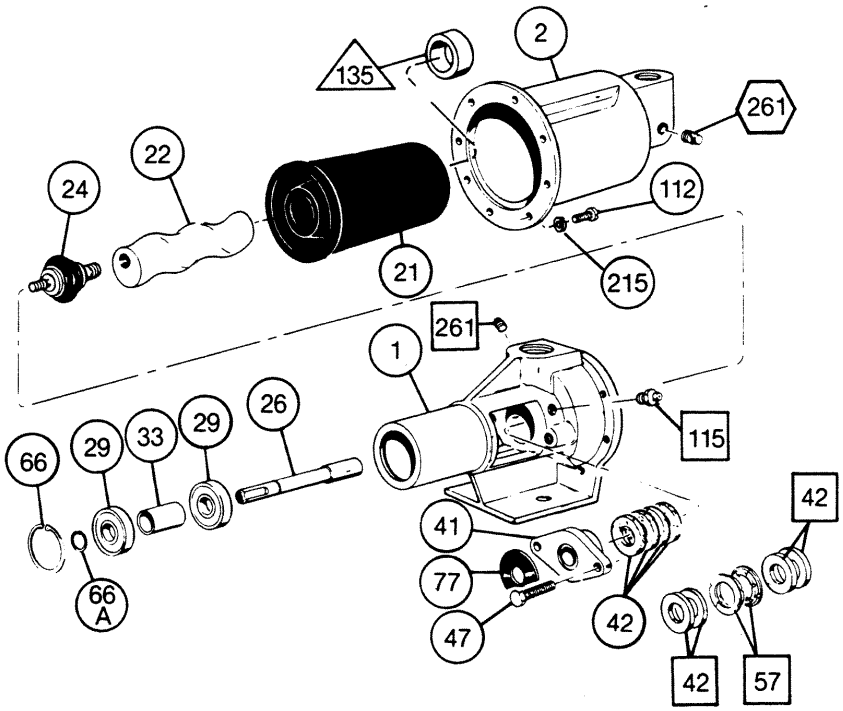

Used on 332 and 367 only.

Used on 356 only.

Used on 356 and 367 only.

Used on -08 only.

Used on 367 only.

PARTS LIST — 331, 332, 333, AND 344 MODELS

Item No.	Description	Mechanical Seal Models			Packing Gland Models
		33101 33201 33301 34401	**33104 33204 33304 34404**	**33108 33208 33308 34408**	**34411**
1	Pump Body	330-1065-002	330-1910-002		340-1000-001
1A	Discharge Housing			340-2362-000	
1B	Bearing Housing			330-4587-000	
1C	Pump Base			340-2369-000	
2	Suction Housing	330-1064-002	330-1911-002	330-4536-000	330-1064-002
*21	Stator	See Stator section below.			
*22	Rotor	See Rotor section below with circled numbers for each series.			
		(1)	(2)	(1)	(1)
24	Joint	Carbon Steel/NBR 320-1511-000	316 SS/NBR 320-3759-000	Carbon Steel/NBR 320-1511-000	
26	Drive Shaft	320-1499-000	320-2938-000	320-1499-000	320-2448-000
29	Bearing (2 req.)	630-0502-031			
33	Bearing Spacer				320-1900-000
41	Packing Gland				320-0101-004
42	Packing				340-3396-005
47	Gland Bolt				619-1520-161
66	Snap Ring	320-1506-000			
66A	Snap Ring				320-4182000
69	Mechanical Seal	320-2424-000			
77	Slinger Ring	320-6382-000			320-6384-000
100	Pipe Plug (3 req.)			610-0120-021	
112	Screws (8 req.)	619-1430-103	320-5968-000	619-0860-081	619-1430-103
112C	Screws (4 req.)			61 9-0890-281	
135	Stator Ring (331 -332 only)	320-7812-000			
215	Lock Washer (8 req.)	320-6464-000			

*Recommended spare parts.

STATORS		Models			
		331	**332**	**333**	**344**
21	Standard Stator, NBR All Models	340-3501-120	340-3502-120	340-3503-120	340-3504-120
21	EPDM Stator	340-3501-320	340-3502-320	340-3503-320	340-3504-320
21	FPM Stator	340-3501-520	340-3502-520	340-3503-520	340-3504-520
ROTORS					
22	(1) 416SS - All Models	320-2729-000	330-0906-000	320-1394-000	320-1841-000
22	(2) 316SS – All Models	320-2933-000	320-2942-000	320-2936-000	320-2934-000

See page 8 for Repair/Conversion Kits

PARTS LIST — 356 AND 367 MODELS

Item No.	Description	Mechanical Seal Models		Packing Gland Models		Mechanical Seal Model	
		35601	35604	35611	35613	36701	36704
1	Pump Body	Cast Iron 340-0636-000	316SS 340-1550-000	Cast Iron 350-0420-000	316SS 350-0491-000	Cast Iron 350-0423-000	316SS 350-0423-007
2	Suction Housing	350-0280-000	350-0489-000	350-0280-000	350-0489-000	350-0302-000	350-0302-007
*21	Stator	NBR 340-3505-120		NBR 340-3505-120		NBR 340-3506-120	
22	Rotor	416SS 320-2304-000	316SS 320-4431-000	416SS 320-2304-000	316SS 320-4431-000	416SS 330-2042-000	316SS 330-3077-000
24	Flex Joint	Carbon Steel 320-1583-000	316SS 320-4427-000	Carbon Steel 320-1583-000	316SS 320-4427-000	Carbon Steel 320-1749-000	316SS 320-4436-000
26	Drive Shaft	320-1759-000	320-4430-000	320-2765-000	320-4435-000	330-1805-000	330-1805-015
29	Bearing (2 req.)	630-0552-051				630-0552-061	
33	Bearing Spacer			320-2764-000			
41	Packing Gland			320-0003-004	320-0003-007		
*42	Packing			340-3396-008			
45	Rotor Pin					320-4439-002	
46	Shaft Pin					320-4439-001	
47	Gland Bolt			619-1530-241			
57	Lantern Ring Half**			320-6585-000			
66	Snap Ring	320-1758-000				320-2794-000	
66A	Snap Ring			320-3533-000			
*69	Mechanical Seal	320-3945-000				320-1750-000	
69A	Seal Spacer	320-4434-000					
77	Slinger Ring	320-6383-000		320-6385-000		320-6385-000	
112	Screws (6 req.)	619-1530-161				619-1530-161	
115	Zerk Fitting			320-2503-001			
135	Stator Spacer	330-7594-000					
202	Shaft Key					611-0040-240	
215	Lock Washer (6 req.)	623-0010-411					
261	Pipe Plug	610-0120-011	610-0420-010	610-0120-011	610-0420-010	610-0120-011	610-0420-010

*Recommended spare parts.
**2 Required

See page 8 for Repair/Conversion Kits

REPAIR/CONVERSION KIT NUMBERS

ELASTOMER REPAIR/CONVERSION KITS

Item No.	Description	331 Models			332 Models		
		NBR	EPDM	FPM	NBR	EPDM	FPM
—	Kit No.	311-9026-000	311-9025-000	311-9054-000	311-9027-000	311-9038-000	311-9055-000
21	• Stator	340-3501-120	340-3501-320	340-3501-520	340-3502-120	340-3502-320	340-3502-520
24	• Joint	320-1511-000‡	320-6367-000†	320-4670-000†	320-1511-000‡	320-6367-000†	320-4670-000†
69	• Seal	320-2424-000	320-6379-000	320-6501-000	320-2424-000	320-6379-000	320-6501-000
Item No.	**Description**	**333 Models**			**344 Models**		
		NBR	**EPDM**	**FPM**	**NBR**	**EPDM**	**FPM**
—	Kit No.	311-9029-000	311-9028-000	311-9056-000	311-9031-000	311-9030-000	311-9057-000
21	• Stator	340-3503-120	340-3503-320	340-3503-520	340-3504-120	340-3504320	340-3504520
24	• Joint	320-1511-000‡	320-6367-000†	320-4670-000†	320-1511-000‡	320-6367-000†	320-4670-000†
69	• Seal	320-2424-000	320-6379-000	320-6501-000	320-2424-000	320-6379-000	320-6501-000

t316SS/with appropriate elastomer.
‡Carbon steel. NBR kits are available only with carbon steel joints; a 316SS/NBR joint for 331-344 Models is available as 320-3759-000.

Item No.	Description	356 Models			367 Models		
		NBR	EPDM	FPM	NBR	EPDM	FPM
—	Kit No. (Mech. Seal Models)	311-9033-000	311-9032-000	311-9058-000	311-9060-000	311-9036-000	311-9124-000
21	• Stator	340-3505-120	340-3505-320	340-3505-520	340-3506-120	340-3506-320	340-3506-520
24	• Flex Joint	320-1583-000‡	320-6369-000†	320-4671-000†	320-1749-000‡	320-6378-000‡	3206515-000‡
69	• Seal	320-3945-000	320-6380-000	320-6510-000	320-1750-000	320-6390-000	320-6517-000
45	• Rotor Pins				320-4439-002	320-4439-002	320-4439-002
46	• Shaft Pin				320-4439-001	320-4439-001	320-4439-001
—	Kit No (Packing Gland Models)	311-9035-000	311-9034-000	311-9059-000			
21	• Stator	340-3505-120	340-3505-320	340-3505-520			
24	• Joint	320-1583-000‡	320-6369-000†	320-4671-000†			

†316SS/with appropriate elastomer.
‡Carbon steel. NBR kits are available only with carbon steel joints; a 316SS/NBR joint for Model 35604 and 35613 pumps is available as 320-4427-000; a 316SS/NBR joint for model 36704 is available as 320-4436-000.

ABRASION RESISTANT SEALS

Elastomer	Models		
	331-344	356	36701
NBR	3206460000	3206505000	3206511000
EPDM	3206502000	3206506000	3206512000
FPM	3206503000	3206507000	3206513000

NBR = Nitrile
EPDM = Ethylene-Propylene-Diene Terpolymer
FPM = Fluoroelastomer

© 1999 by Moyno, Inc.
® Moyno is a registered trademark of Moyno, Inc.

Printed in U.S.A.

Double The Length Of Your Moyno Pump Warranty For FREE!

For your *free* pump warranty extension, choose from one of the three options below:

1. Go to www.moyno.com and fill out the registration form online

2. Mail this form by placing it in an envelope and sending it to:

3. Fax this form to 937-327-3177

Moyno, Inc.
Attn: Tish Wilson
P. O. Box 960
Springfield, OH 45501-0960
U.S.A.

Thank you for choosing a Moyno Pump. Please take the time to complete this warranty registration form. Upon receipt of your form, your standard limited warranty on defective material and workmanship will be extended to twice the standard period of time at no additional cost to you. We appreciate your business and look forward to serving you in the future.

LLOYD'S REGISTER QUALITY COMPANY ISO9001 NATIONAL ACCREDITATION OF CERTIFICATION BODIES

CERTIFICATE No. 101442

MOYNO

Always the Right Solution™

Always Insist on Genuine Moyno Replacement Parts!

Moyno® Pump Warranty Registration

Pump Model # _____ Pump Serial # _____

Purchased From _____ Date Purchased _____

Your Name _____ Your Title _____

Your Company Name _____

Address _____

City/State (Province)/Zip Code _____

Phone Number _____ Fax Number _____

E-mail _____

Application for Which This Pump Was Purchased

Material _____ Flow Rate _____ Process Temperature _____

Operating Speed _____ Viscosity _____ pH Value _____

Hours Operated per Day _____ Continuous _____ Intermittent _____

Discharge Pressure _____ Suction Pressure _____ NPSH Available _____

Percent of Solids _____ Particle Size _____ Abrasion Rating _____

How Did You First Hear of Moyno Pumps?

❑ Advertisement ❑ Postcard ❑ Trade Show ❑ Referral

❑ Distributor Salesperson ❑ Previous Experience With Moyno Pumps ❑ Other – Explain Below

Thank You!

AC & DC Motor Installation – Maintenance Instructions

These instructions are intended to complement (not replace) the information in MN400 Installation and Operation manual for "Integral Horsepower AC Induction Motors ODP, TEFC, Explosion Proof" and MN605 Installation and Operation manual for "Integral Horsepower DC Motors".

Handling

The weight of the motor and shipping container will vary. Use correct material handling equipment to avoid injury.

Use caution when removing the motor from its packaging. Sharp corners may exist on motor shaft, motor key, sheet metal and other surfaces.

Receiving

Inspect the motor for damage before accepting it. The Motor shaft should rotate freely with no rubs. Report any damage immediately to the commercial carrier that delivered your motor.

Safety Notice

Only qualified personnel trained in the safe installation and operation of this equipment should install this motor. When improperly installed or used, rotating equipment can cause serious or fatal injury. Equipment must be installed in accordance with the National Electrical Code (NEC), local codes and NEMA MG2 Safety Standards for Construction and Guide for Selection, Installation and Use of Electric Motors and Generators. Observe the following guidelines:

1. When eyebolts are provided, they must be fully tightened and are intended to lift the motor and its included accessories only.
2. Ground the motor according to NEC and local codes.
3. Provide a permanent guard to prevent accidental contact of body parts or clothing with rotating or moving parts or burns if motor is hot.
4. Shaft key must be secured before starting motor.
5. Do not apply power to the motor until the motor is securely mounted by its mounting holes.
6. This motor must only be connected to the proper line voltage, line frequency and load size.
7. Motors are not to be used for load holding or restraining unless a properly sized brake is installed. If a motor mounted brake is installed, provide proper safeguards for personnel in case of brake failure.
8. Disconnect all power services, stop the motor and allow it to cool before servicing.
9. For single phase motors, discharge the start and/or run capacitors before servicing.
10. Do not by-pass or render inoperative any safety device.
11. DC series wound motors must be protected from sudden loss of load causing overspeed damage. DC shunt wound motors must be protected from loss of field voltage which can result in damage.
12. When using AC motors with frequency inverters, be certain that the motors Maximum Speed Rating is not exceeded.
13. Mounting bolts should be high tensile steel. Be sure to use a suitable locking device on each bolt (spring washer or thread lock compound).

Guarding

After motor installation is complete, a guard of suitable dimensions must be constructed and installed around the motor/gearmotor. This guard must prevent personnel from coming in contact with any moving parts of the motor or drive assembly but must allow sufficient cooling air to pass over the motor.

If a motor mounted brake is installed, provide proper safeguards for personnel in case of brake failure.

Brush inspection plates and electrical connection cover plates or lids, must be installed before operating the motor.

When this motor is installed according to these instructions, it complies with the EEC Machinery Directive. Electromagnetic Compatibility (EMC) requirements for CE compliance are met when the incoming power is purely sinusoidal. For other power source types, refer to MN1383 "Recommended Practices for Installation for EC Directive 89/336/EEC Relating to EMC".

BALDOR
MOTORS • DRIVES • GENERATORS

P.O. Box 2400
Fort Smith, AR 72902–2400 U.S.A.
(479) 646–4711

2/05

LB5040

Motor Enclosure

ODP, **Open drip proof** motors are intended for use in clean, dry locations with adequate supply of cooling air. These motors should not be used in the presence of flammable or combustible materials. Open motors can emit flame and/or molten metal in the event of insulation failure.

TEFC, **totally enclosed** motors are intended for use where moisture, dirt and/or corrosive materials are present in indoor and outdoor locations.

Explosion proof motors, as indicated by the Underwriters Laboratories, Inc. label are intended for use in hazardous areas as specified by the NEC.

Mounting

Foot mounted machines should be mounted to a rigid foundation to prevent excessive vibration. Shims may be used if location is uneven.

Flange mounted machines should be properly seated and aligned. Note: If improper rotation direction is detrimental to the load, check rotation direction prior to coupling the load to the motor shaft.

For **V-belt drive,** mount the sheave pulley close to the motor housing. Allow clearance for end to end movement of the motor shaft. Do not overtighten belts as this may cause premature bearing failure or shaft breakage.

Direct coupled machines should be carefully aligned and the shaft should rotate freely without binding.

Wiring

Connect the motor as shown in the connection diagram. If this motor is installed as part of a motor control drive system, connect and protect the motor according to the control manufacturers diagrams. The wiring, fusing and grounding must comply with the National Electrical Code and local codes. When the motor is connected to the load for proper direction of rotation and started, it should start quickly and run smoothly. If not, stop the motor immediately and determine the cause. Possible causes are: low voltage at the motor, motor connections are not correct or the load is too heavy. Check the motor current after a few minutes of operation and compare the measured current with the nameplate rating.

Adjustment

The neutral is adjustable on some DC motors. AC motors have no adjustable parts.

Noise

For specific sound power or pressure level information, contact your local Baldor representative.

Vibration

This motor is balanced to NEMA MG1, Part 7 standard.

Brushes (DC Motors)

Periodically, the brushes should be inspected and all brush dust blown out of the motor. If a brush is worn $^1/_2$ (from length specified in renewal parts data), replace the brushes. If the commutator is worn or rough, the armature should be removed. The commutator should be turned in a lathe, the mica recut and the commutator polished. Reassemble and seat the new brushes using a brush seating stone. Be sure the rocker arm is set on the neutral mark.

Lubrication

This is a ball or roller bearing motor. The bearings have been lubricated at the factory. Motors that do not have regrease capability are factory lubricated for the normal life of the bearings.

Lubricant

Baldor motors are pregreased, normally with Polyrex EM (Exxon Mobil). If other greases are preferred, check with a local Baldor Service Center for recommendations.

Relubrication Intervals (For motors with regrease capability)

New motors that have been stored for a year or more should be relubricated. Lubrication is also recommended at these intervals:

Table 1 Relubrication Interval

NEMA (IEC) Frame Size	Rated Speed (RPM)			
	3600	1800	1200	900
Up to 210 incl. (132)	5500Hrs.	12000Hrs.	18000Hrs.	22000Hrs.
Over 210 to 280 incl. (180)	3600Hrs.	9500Hrs.	15000Hrs.	18000Hrs.
Over 280 to 360 incl. (225)	*2200Hrs.	7400Hrs.	12000Hrs.	15000Hrs.
Over 360 to 5000 incl.(300)	*2200Hrs.	3500Hrs.	7400Hrs.	10500Hrs.

* Lubrication interval for 6313 or 6314 bearings that are used in 360 through 5000 frame, 2 pole motors. If roller bearings are used, bearings must be lubricated more frequently, divide the relubrication interval by 2.

Table 2 Service Conditions

Severity of Service	Ambient Temperature Maximum	Atmospheric Contamination	Type of Bearing
Standard	40 C	Clean, Little Corrosion	Deep Groove Ball Bearing
Severe	50 C	Moderate dirt, Corrosion	Ball Thrust, Roller
Extreme	>50 C* or Class H Insulation	Severe dirt, Abrasive dust, Corrosion	All Bearings
Low Temperature	<-30 C **		

* Special high temperature grease is recommended.

** Special low temperature grease is recommended.

Table 3 Lubrication Interval Multiplier

Severity of Service	Multiplier
Standard	1.0
Severe	0.5
Extreme	0.1
Low Temperature	1.0

Table 4 Amount of Grease to Add

Frame Size NEMA (IEC)	Bearing Description (Largest bearing in each frame size)					
	Bearing	OD D mm	Width B mm	Weight of grease to add ounce (gram)	Volume of grease to add	
					inches^3	teaspoon
Up to 210 incl. (132)	6307	80	21	0.30 (8.4)	0.6	2.0
Over 210 to 280 incl. (180)	6311	120	29	0.61 (17.4)	1.2	3.9
Over 280 to 360 incl. (225)	6313	140	33	0.81 (23.1)	1.5	5.2
Over 360 to 5000 incl.(300)	NU322	240	50	2.12 (60.0)	4.1	13.4

Weight in grams = 0.005 DB

Procedure

Clean the grease fitting (or area around grease hole, if equipped with slotted grease screws). If motor has a purge plug, remove it. Motors can be regreased while stopped (at less than 80 C) or running.

Apply grease gun to fitting (or grease hole). Too much grease or injecting grease too quickly can cause premature bearing failure. Slowly apply the recommended amount of grease, taking 1 minute or so to apply. Operate motor for 20 minutes, reinstall purge plug if previously removed.

Caution: Keep grease clean. Mixing dissimilar grease is not recommended.

Sample Relubrication Determination

This sample determination is based on a NEMA 286T (IEC 180) motor operating at 1750 RPM driving an exhaust fan in an ambient of 43 C atmosphere that is moderately corrosive.

1. Table 1 list 9500 hours for standard conditions.
2. Table 2 classifies severity of service as "Severe".
3. Table 3 lists a multiplier value of 0.5 for Severe conditions.
4. Table 4 shows that 1.2 in^3 or 3.9 teaspoon of grease is to be added.

Note: Smaller bearings in size category may require reduced amounts of grease.

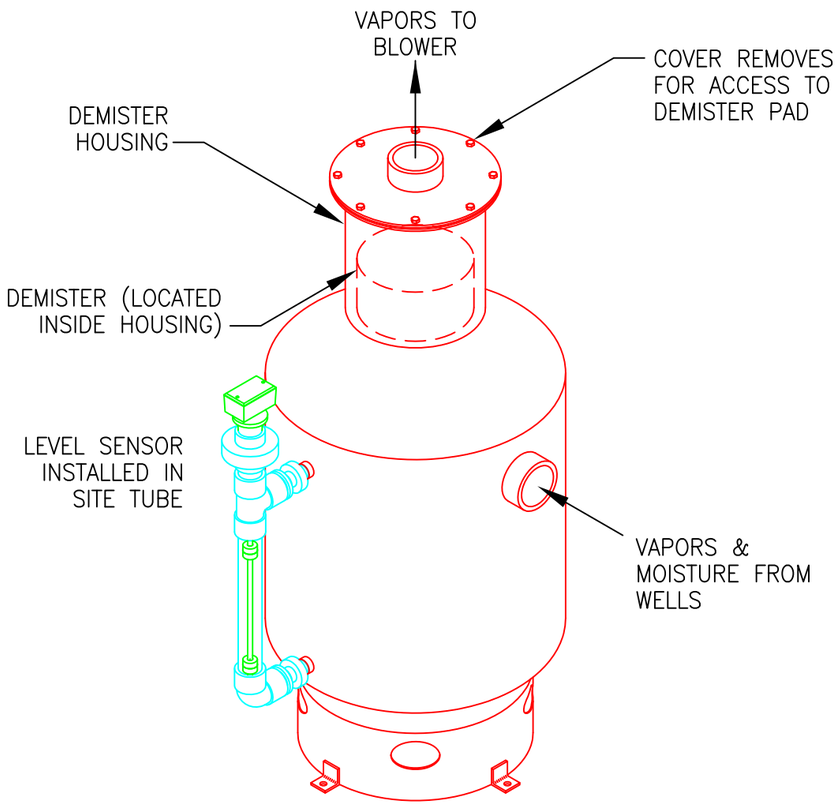

240–GALLON MOISTURE SEPARATOR
SHOWN WITH SIDE ENTRY INLET

PLEASE NOTE THAT ORIENTATION OF FITTINGS MAY VARY DEPENDING UPON APPLICATION AND ACTUAL LAYOUT OF EQUIPMENT.

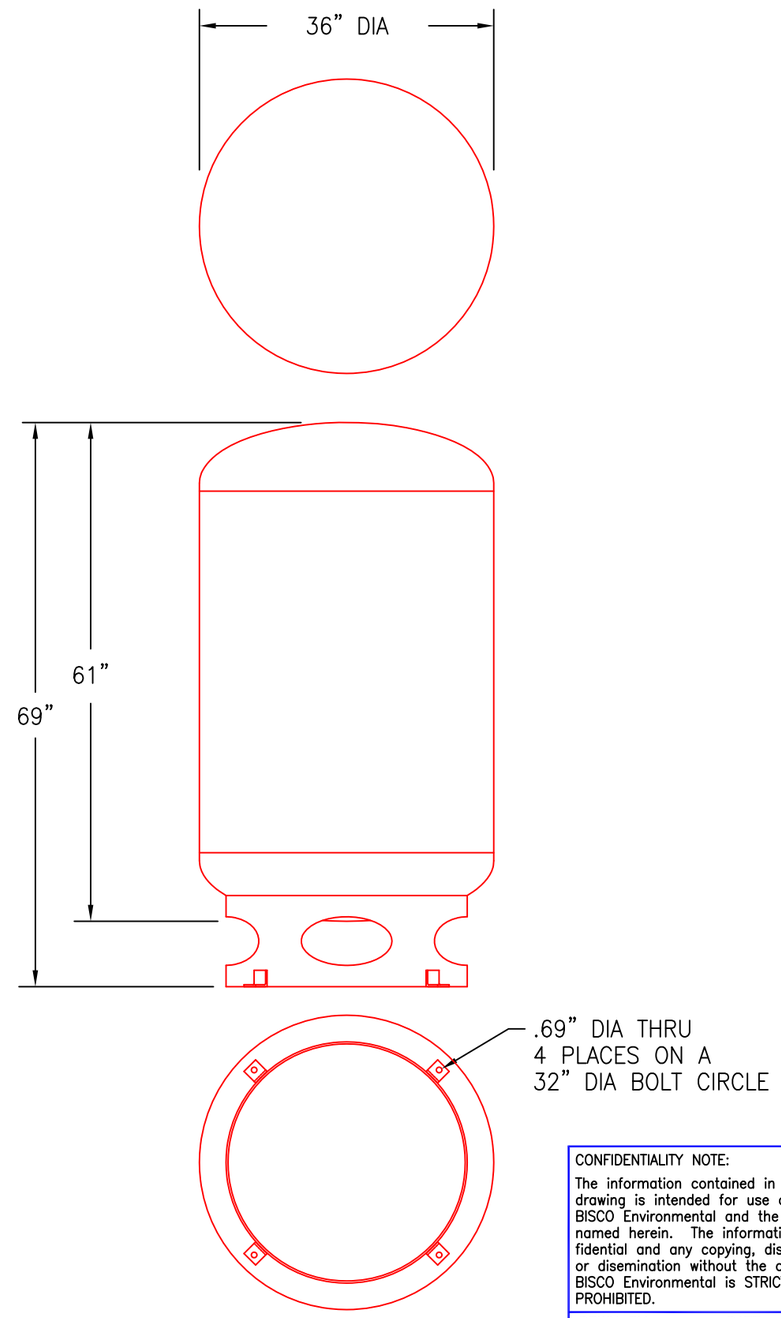

TANK ENVELOPE
DIMENSIONS

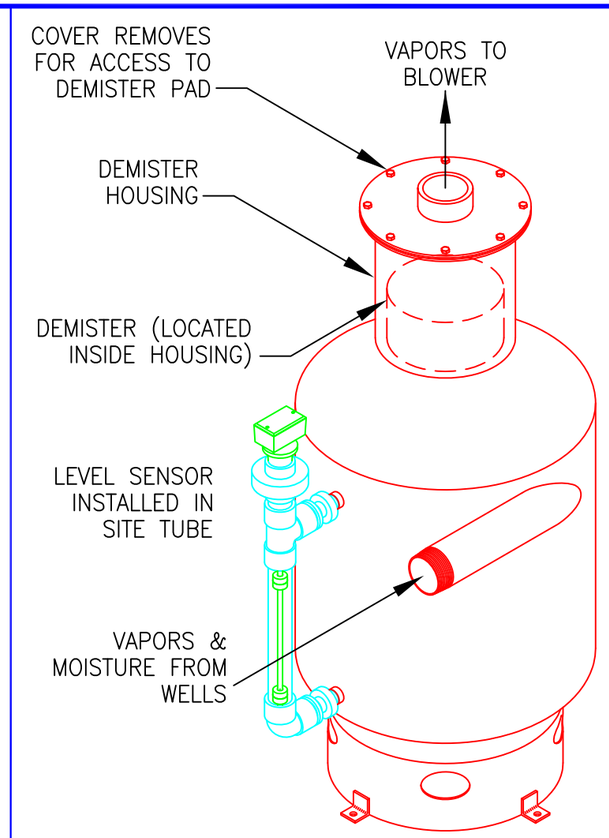

240–GALLON MOISTURE SEPARATOR
SHOWN WITH TANGENTIAL INLET

PLEASE NOTE THAT ORIENTATION OF FITTINGS MAY VARY DEPENDING UPON APPLICATION AND ACTUAL LAYOUT OF EQUIPMENT.

REV.	DESCRIPTION	DATE	APPR.
REVISIONS			

CONFIDENTIALITY NOTE:
The information contained in this drawing is intended for use only by BISCO Environmental and the company named herein. The information is confidential and any copying, distribution or disemination without the consent of BISCO Environmental is STRICTLY PROHIBITED.

DRWN BY JAD DATE 12/6/11
CHK BY DATE
APPR BY DATE

BISCO Environmental
Soil & Groundwater Remediation Equipment
Taunton, Massachusetts 02780

TITLE
240–GALLON MOISTURE SEPARATOR
WITH DEMISTER, STRUCTURAL LAYOUT

JOB NO.

SCALE	SIZE	DWG NO.	SHEET	REV
1"=20"	B	240G–MS–DMSTR	1 OF 1	

ACS INDUSTRIES, LP
Separations Technology Division

ACS Industries, LP
Separations Technology Division
14211 Industry Road
Houston, TX 77053
(800) 231-0077 · (713) 434-0934 · Fax: (713) 433-6201
http://www.acsindustries.com, e-mail: acstx@flash.net

Customer:	XDD, LLC.
Contact:	
Quote Number:	Solutia - Sauget, IL
Date:	08/22/2011
Reference Number:	S.O. #12936
Engineer:	

Roots 711 URAI w/ Marthon E984B (40 HP) Motor
750 SCFM @ 11.48" HG

PROCESS	CASE 1
Gas/Liquid system	Air / Water
Temperature, °F	55
Pressure, in Hg, gauge	-11.48
Compressibility factor	1
Gas density, lb/ft³	0.0476
Gas viscosity, centipoise	0.0183
Gas flow rate, scfm	750
Liquid density, lb/ft³	62.36
Liquid viscosity, centipoise	1.214
Fouling	No

PAD/VANE DEFINITION	
Pad style	5CA
MistMaster®	No
Pad density	7.0
Wire diameter(s)	0.011
Surface area(s)	65
Percent voids	98.6
Material	Metal

PERFORMANCE	
% Collection Eff. @ 5 µm	96.8
10 µm	99.61
15 µm	99.8
20 µm	99.85
50 µm	99.89
Dry pressure drop, in-water	0.1956

GEOMETRY	
Pad/vane thickness, inch	6
Pad shape	Round
Actual Dimension 1, in*	20
Actual Dimension 2, in**	--
Actual Capacity factor	0.2543
Actual Velocity, fps	9.206
Actual Area, ft²	2.182
Optimum Capacity factor	0.2788
Optimum Velocity, fps	10.09
Optimum Area, ft²	1.99

* Dimension 1: Diameter (round, segment); Length (rectangle)
** Dimension 2: Width (rectangle); Segment width (segment)

The Engineered Mist Eliminator

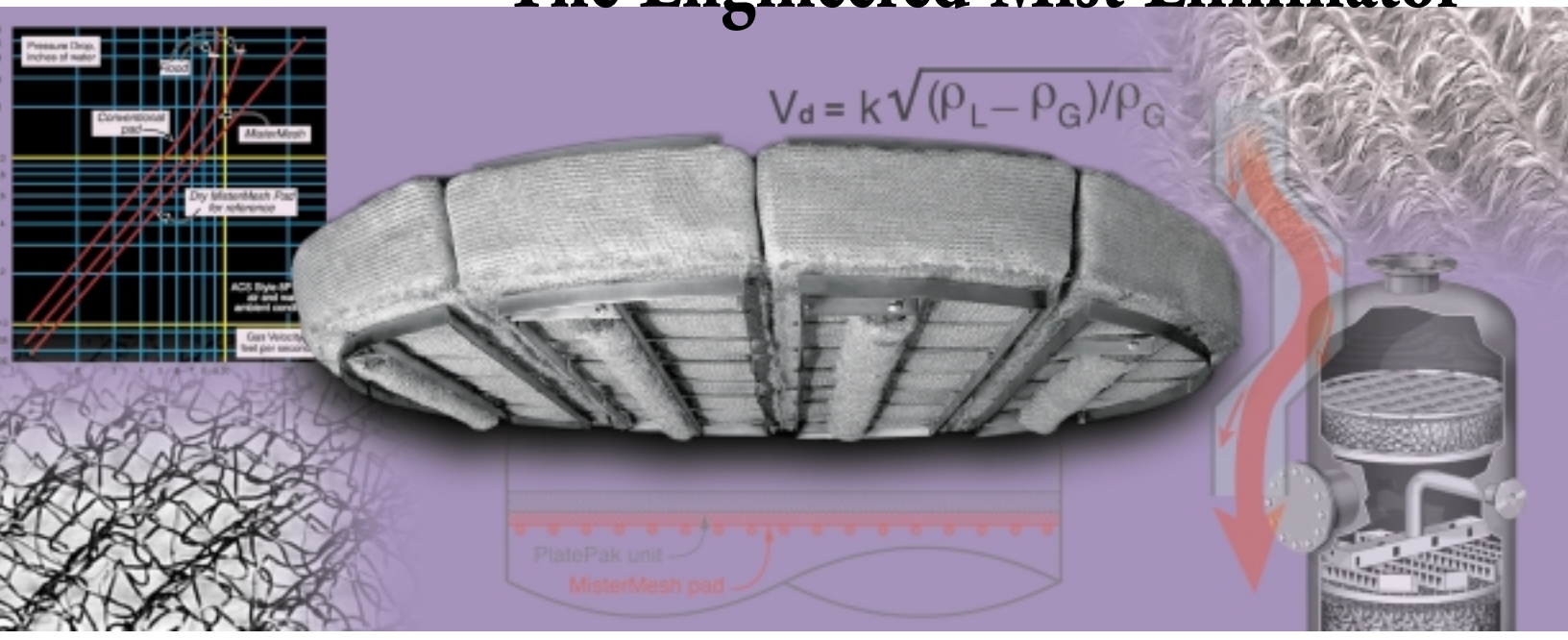

Reduce Costs

Increase Capacity

Improve Performance

Debottleneck Equipment

Simplify Installation

Customize Pads

ACS

SEPARATIONS & MASS-TRANSFER PRODUCTS

ACS Industries, LP • Houston, Texas • USA

Table of Contents

Introduction 1

Droplet Formation and Size Distributions 1

Mechanisms of Droplet Removal 2

Types of Mist Eliminator Mesh & Materials . . .4

Design Equations 6

Predicting Pressure Drop 7

Inlet Diffusers 7

Vessel Configuration 8

Advanced Mist Eliminator Designs 10

Vane-Mesh Assemblies 11

Use of Geometry 11

MultiPocket™ Vanes 11

Case Studies & Examples 12

Plate-Pak™ and MistXpert™ are trademarks of ACS Industries, Inc. MaxFlow® is a registered trademark of ACS Industries, LP and Mistermesh® is a registered trademark of ACS Industries, Inc. Ripple Tray® is a registered trademark of Stone & Webster Engineering Corporation. Kynar® is a registered trademark of ELF Atochem North America, Inc. Teflon® is a registered trademark of E.I. du Pont de Nemours and Company. Hastelloy® is a registered trademark of Haynes International, Inc. Goodloe® is a registered trademark of Koch-Glitsch, LP. ACS Industries presents the information in this publication in good faith, believing it to be accurate. However, nothing herein is to be construed as an express or implied warranty or guarantee regarding performance, merchantability, fitness for a particular purpose, non-infringement of patents, trademarks or copyrights.

©Copyright 2004 by ACS Industries, Inc,

Printed in USA 4-04 1000AP

The Engineered Mist Eliminator

Mist elimination, or the removal of entrained liquid droplets from a vapor stream, is one of the most commonly encountered processes regardless of unit operation. Unfortunately, mist eliminators are often considered commodity items and are specified without attention to available technologies and design approaches. The engineered mist eliminator may reduce liquid carryover by a factor of one hundred or more relative to a standard unit, drop head losses by 50% or more, or increase capacity by factors of three or four. This manual summarizes cost effective approaches to reducing solvent losses or emissions, extending equipment life and maintenance cycles using proven and cost effective technologies and techniques.

Droplet Formation and Size Distributions

Entrained liquid does not consist of same-sized droplets, but as a broad range of droplet sizes that may be characterized with a Normal or Bell Distribution centered about some mean or average. The average droplet size depends very much on the mechanism by which they are generated. Sizing equations are expressed in terms of the probability of removing a droplet of a given diameter, and mist eliminator performance is the integration or cumulative sum of individual removal efficiencies. It is therefore critical to know the approximate droplet size distribution in order to properly design a mist elimination system. Figure 1 show some typical size distribution curves from different sources.

FIGURE 1

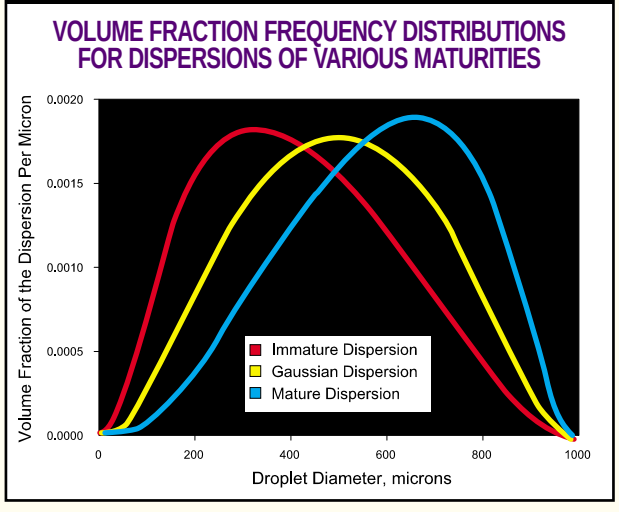

In practice, designers or engineers do not quantify or measure droplet size distributions, rather they are assumed based on empirical data or experience. Fortunately, an experienced engineer can assume an approximate distribution based on the means or mechanism by which the droplets are generated. Typical examples from common mist sources are given to illustrate these concepts.

Fine droplet distributions, often called *fogs* (<3 µm diameter particles with an average typically in the submicron range), occur in high speed metal stamping in which cycles of extreme frictional heating and shock condensation of lubricating oils form droplets in the submicron range, so-called "blue smoke". This smoke is removed to comply with health and environmental regulations.

Fog is also produced when gas phase reactions form a liquid product as in the case of vapor phase SO_3 and water yielding H_2SO_4. Downstream

equipment corrodes rapidly without the removal of this liquid. Similar concerns are found in ammonia prill towers, many chlorine applications, as well as phosphoric and nitric acid plants.

A *mist* consists of droplets in the range of 3µm and greater, though distributions with average diameters 20 µm and greater are termed *Sprays*. Mist coming off the top of packing or trays, or generated by surface evaporation, are typically in the broad range of 5-800 µm. In towers used in glycol dehydration and amine sweetening in which mists are a major source of costly solvent losses, removal of droplets down to 5 µm is recommended.

Hydraulic spray nozzles generate particles of diameters greater than 50 µm and pneumatic nozzles greater than 10 µm, with upper limits reaching 1000 µm.

The first step in engineering a mist eliminator is to determine the mechanism by which the droplets are generated and assume an average droplet size. Figure 2 summarizes typical particle size distributions caused by various mechanisms:

FIGURE 2

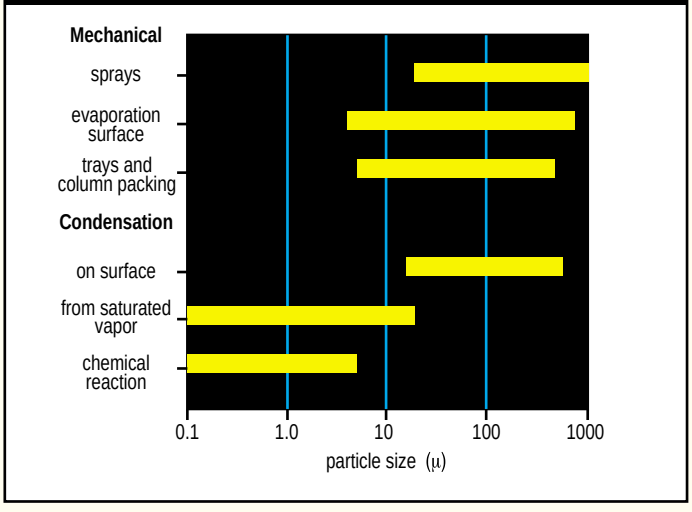

This manual contains basic design concepts used by engineers to remove droplets greater than 3 µm in diameter, so called mists and sprays.

Mechanisms of Droplet Removal

Droplets are removed from a vapor stream through a series of three stages: collision & adherence to a target, coalescence into larger droplets, and drainage from the impingement element. Knowing the size distributions as explained above is important because empirical evidence shows that the target size - important in the first step of removal - must be in the order of magnitude as the particles to be removed. These steps are shown schematically in Figure 3 for mist elimination using a wire mesh mist elimination.

FIGURE 3

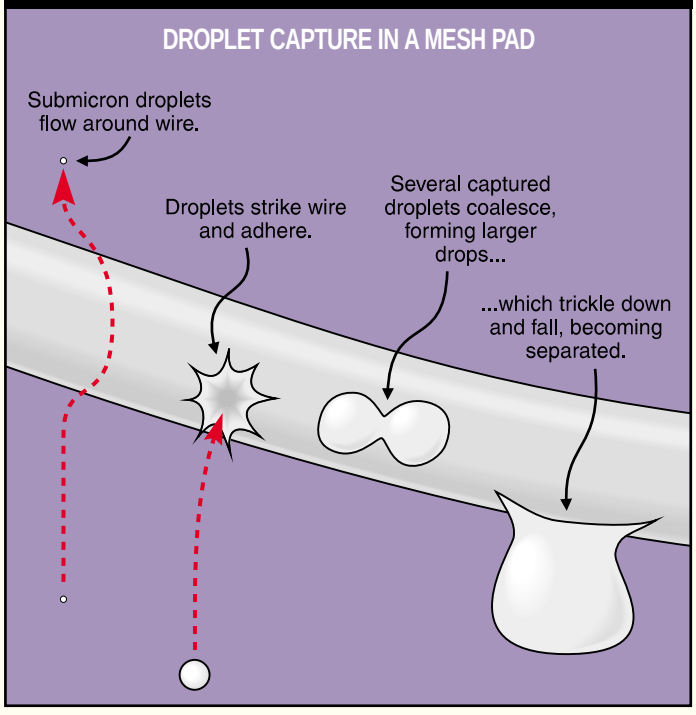

For fogs in which the bulk of the droplets are characterized with submicron diameters, the energy to bring about the collision with the target is derived from Brownian Diffusion, the random motion of fine liquid particles as they are pushed about by molecular action as shown in Figure 4c. Fog elimination with so-called fiberbed technology is beyond the scope of this manual.

FIGURE 4

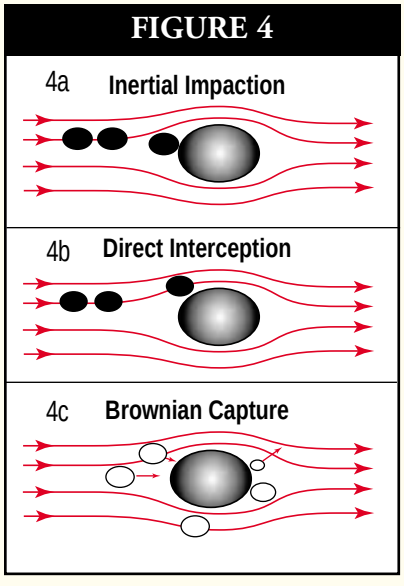

For particles in the mist region between 3-20 µm, knitted wire mesh is most common type of mist eliminator used and Interception is the

primary mechanism. Consider a droplet approaching a mesh filament of much larger diameter as shown in Figure 4b. The more dense the droplet relative to the gas, the larger the droplet relative to the filament, and the higher the gas velocity, the more likely it is that the droplet will strike the filament. If the velocity is too low, or the droplet too small or too light compared to the gas, the droplet will simply flow around the filament with the gas. If the velocity is too high, liquid clinging to the filaments will be re-entrained, mostly as larger droplets, and carried away by the gas. Re-entrainment is also promoted by low relative liquid density (making it easier for the gas to pick up a droplet) and low liquid surface tension (as less energy is required to break up a film or droplet). The engineered wire mesh mist eliminator may remove 99.9% of particles 2 µm and greater diameter. Figure 5 shows a typical removal efficiency vs droplet size distribution for a wire mesh mist eliminator.

FIGURE 5

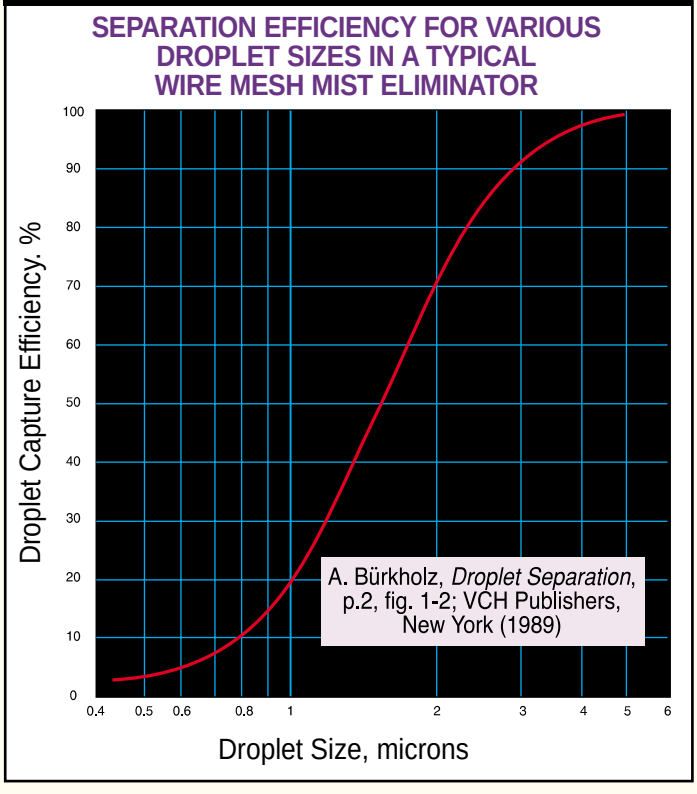

Droplets ~20 µm and greater are primarily collected by means of Inertial Impaction whereby the target is directly in the path of the streamline, as shown in Figure 4a. Figure 6 depicts a profile of the ACS PlatePak™ vane. The entrained droplets, due to their momentum, tend to move in straight lines. By studying this figure, it is easy to understand why in the design equations to follow the removal efficiency is directly proportional to the difference in densities of the liquid droplet and carrying gas. With each change in direction of the gas, some droplets collide with the surface and adhere, eventually coalescing into larger droplets which then drain by gravity. Properly designed vane mist eliminators can remove 99% of particles as low as 10 µm in diameter, especially at lower pressures.

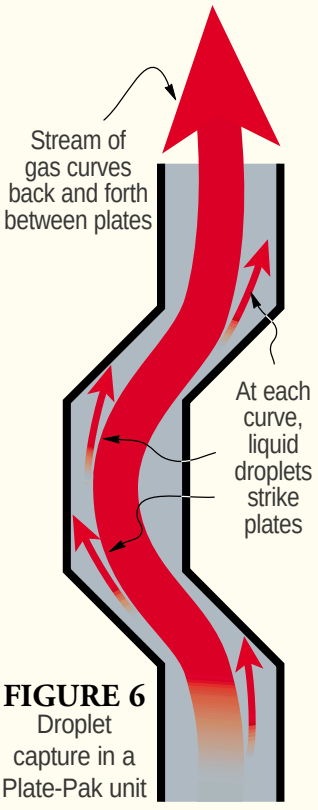

FIGURE 6
Droplet capture in a Plate-Pak unit

Figure 7 illustrates typical wire mesh and PlatePak™ vane mist eliminators, and Figure 8 shows some typical performance curves for both mesh and vane mist eliminators.

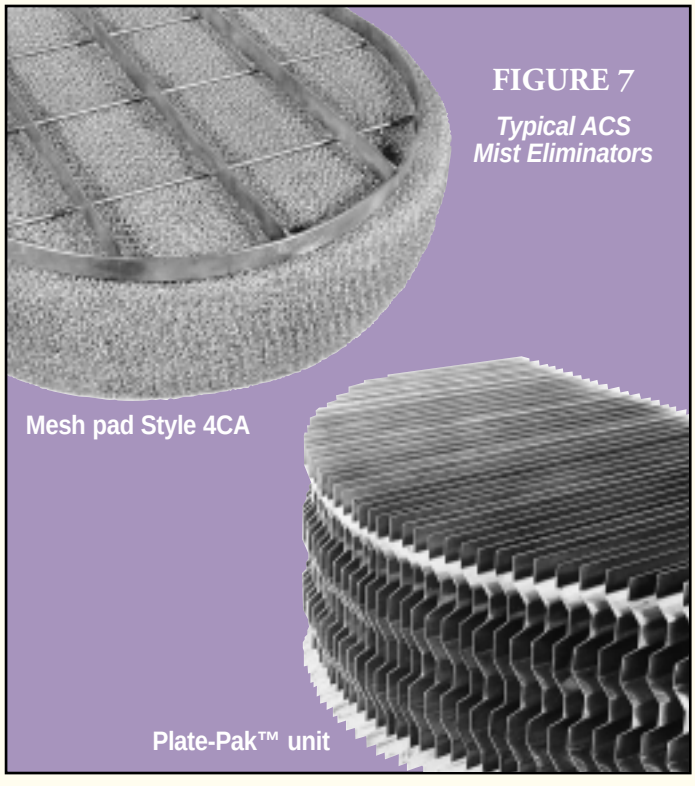

FIGURE 7
Typical ACS Mist Eliminators

FIGURE 8

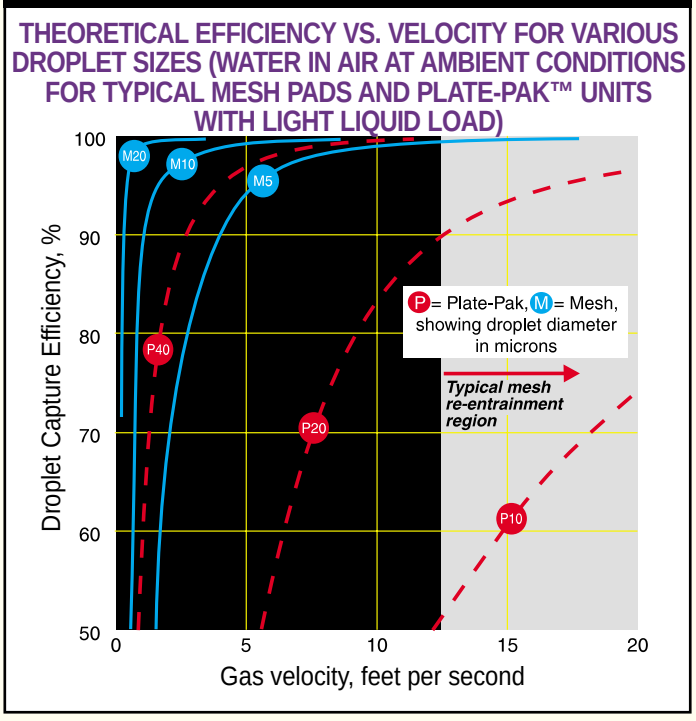

It is worthwhile to discuss Fig. 8 and mist eliminator performance. The dotted curves correspond to different styles of vanes and the solid to wire mesh styles. Note first of all that vanes can be engineered to operate at higher gas velocities and flow rates relative to mesh, but that mesh mist eliminators can approach 100% removal efficiency at smaller droplet sizes. This agrees with the discussions above on Interception and Inertial Impaction removal mechanisms. Note the drastic efficiency drop off at low velocities, in which droplets drift around the filaments or vane blades without striking them. This phenomenon defines the lower operating range of a mist eliminator. The other extreme is when the velocity is too high. In this case, the droplets are captured but the velocity of the gas provides sufficient energy to tear-off and re-entrain droplets. It is in the context of re-entrainment that the design equations which follow show that the removal efficiency is directly proportional to the surface tension of the liquid. As the surface tension increases, so it requires greater kinetic energy (i.e. gas velocity) to break the bond between droplet and target, and the droplets collect and coalesce until drainage by gravity. Re-entrainment defines the upper capacity limit of a mist eliminator.

Operating range is also affected by the liquid loading (proportion of liquid) of the gas. If too great, the mist eliminator becomes choked with liquid, a condition called flooding. Flooding is often noticed by high pressure drops or massive carryover of liquids. Typical wire mesh mist eliminators accommodate liquid loads up to about one US gallon per square foot and vanes twice as much.

The key operating ranges and suitability of mesh and vane mist eliminators is summarized in Figure 9. It emphasizes that vanes are more effective at higher velocities and greater droplet sizes while mesh is more suitable for removing smaller particles at lower velocities. Gravity settling alone is sufficient for very large particles, and co-knit mesh pads, discussed below, for particles in the range of sizes from 2-8 µm. Finally, fiberbed technology is used for submicron fogs.

FIGURE 9

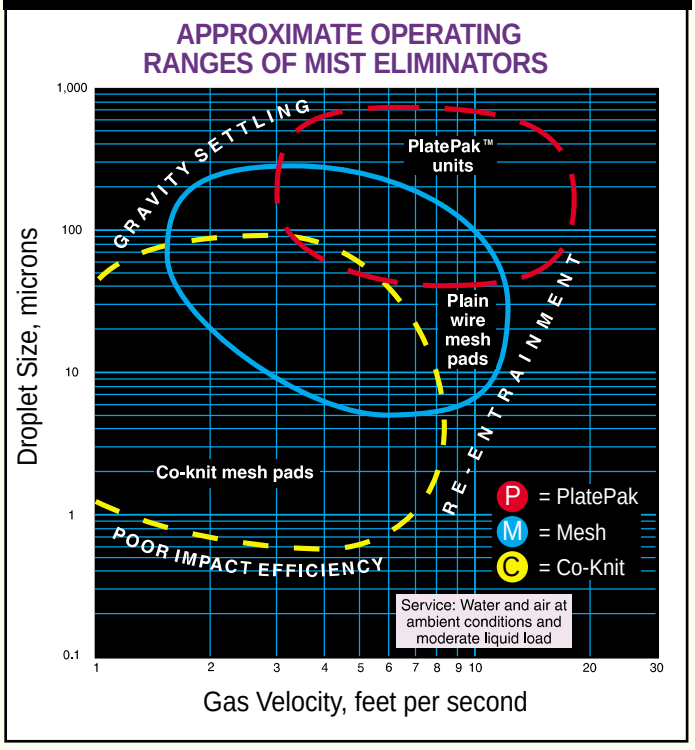

Types of Mist Eliminator Mesh Styles & Materials

Most designers believe that all wire mesh mist eliminators behave basically the same in terms of capacity and removal efficiency. It is true that for meshes of same filament diameter, the denser mesh offers superior removal efficiency. For meshes with differing filament diameters, a lighter (less dense) mesh may offer considerably better removal efficiency. The key is that the working part of the mesh is the target density, not

the mass density. For example, the most common 9-lb density mesh, ACS style 4CA, exhibits ~85 sq-ft/cu-ft of surface area. Compare this to the co-knit of a metal with fiberglass (ACS style 6BE) which also exhibits 9-lb mass density but exhibits a specific surface area approaching 3,700 sq-ft/cu-ft, some 40X greater targets per unit volume.

Table 1 shows a few of the more common mesh styles available, together with mesh density and void fraction, and most importantly, the diameter and specific surface area (i.e. the target density) of filaments used.

TABLE 1 • *Wire and Plastic Mesh Styles*

Mesh Style	Density lbs/ft³	Diameter D, inches	Surface, S, ft²/ft³	Percent Voids, ε
Metal mesh				
7CA	5.0	0.011	45	99.0
5CA	7.0	0.011	65	98.6
4CA	9.0	0.011	85	98.2
4BA	12.0	0.011	115	97.6
3BF	7.2	0.006	120	98.6
3BA	12.0	0.006	200	97.6
Plastic mesh				
8P	4.0	0.011	130	92.0
8K	4.0	0.011	160	96.3
8T	4.0	0.011	130	97.0

Mesh Style	Density lbs/ft³	Diameter D, inches	Surface, S, ft²/ft³	Percent Voids, ε
Metal mesh				
8D	9	0.0008	485	99.0
8TMW11	12	0.0008	485	99.0
6BE	9	0.00036	3725	99.0
Plastic mesh				
8PP	3	0.001	530	99.0
8TT	5	0.0008	530	99.0

It is the amount of targets per unit volume which influences removal efficiency, not the density of mesh (the greater the number of targets the greater the probability of a successful collision).

In a co-knit such as a metal alloy and fiberglass, the alloy provides a skeleton for structural support and prevents the high specific surface media from collapsing on itself.

As far back as the 1950's researchers (C. LeRoy Carpenter et al) determined that specific surface area and target or filament diameter play a great role in removal efficiency. Target or filament diameter must be on the order of magnitude as the smallest droplets to be removed. Due to limitations in metal wire ductility and corrosion considerations, co-knits provide finer targets and hence remove finer droplets. Figures 8 and 9 are enlarged images of crimped wire mesh and a co-knit with fiberglass respectively.

FIGURE 8

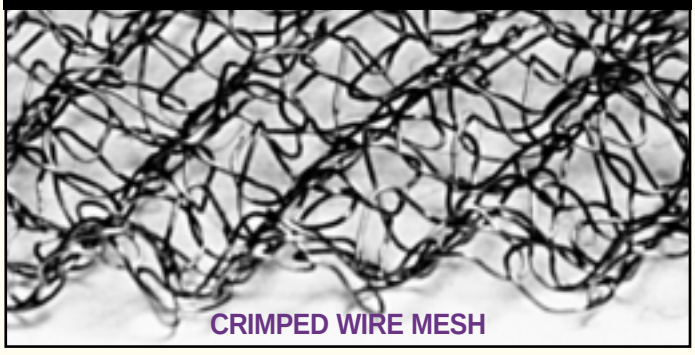

CRIMPED WIRE MESH

FIGURE 9

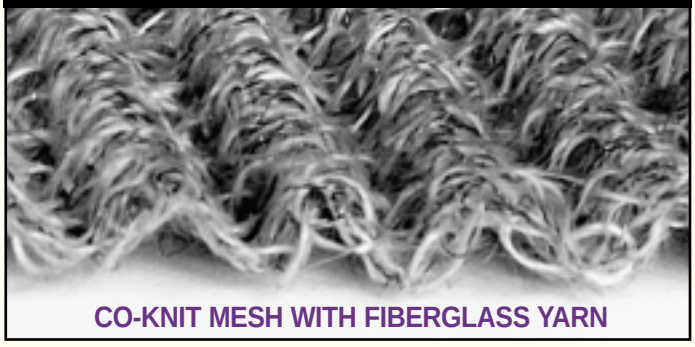

CO-KNIT MESH WITH FIBERGLASS YARN

In summary, it is important to report mesh styles in terms of the specific surface area - a measure of the target density, and filament diameter -a measure of the smallest droplet size that can be removed with high efficiency. The mass density is only relevant insofar that a metal mesh of density 12-lb exhibits a greater specific surface area than one of density 7-lb provided the wire diameter remains constant.

Selecting the material of mesh style(s) is also important. Corrosion rates as low as 0.005"/year is not serious in vessel walls but will quickly destroy 0.006" or 0.011" wire mesh. Table 2 gives preliminary guidelines, but ACS draws wire and knits mesh with any ductile metal for special applications.

When applying non-metal materials operating temperature limits must be considered.

TABLE 2
Mesh Corrosion & Temp. Considerations

Material	Spec. Grav.	Max. Op. Temp., °F	Typical Surface
304 SS	1.00	---	Petroleum, aqueous
304L	1.00	---	Petroleum, aqueous
316L	1.00	---	Sulfuric acid
410 SS	1.00	---	Mild chemicals
Monel®	1.12	---	Corrosive chemicals
Nickel	1.13	---	Caustic evaporators
Alloy 20	1.00	---	Sulfuric acid
Glass	2.52	---	Mild aqueous chemicals
Hasteloy®	1.14	---	Hydrochloric & other acids
Dacron®	1.38	350	Co-knit applications
Kynar®	1.75	300	Acid, alkali
Polypropylene	0.90	160	Water, acid, alkali
Teflon®	2.15	400	Hot sulfuric acid up tp 300ßF
Tefzel®	1.70	380	Acid, alkali

Design Equations

To determine mist eliminator cross-sectional area (and hence vessel size) and predict performance in terms of removal efficiency, the optimum design gas velocity is determined first. The Souders-Brown equation is used to determine this velocity based on the physical properties of the liquid droplets and carrying vapor:

$$V_d = k(\rho L - \rho G / \rho G)^{1/2} \qquad (1)$$

where V_d = design gas velocity (ft/sec)
k = Capacity Factor (ft/sec)
ρL = Liquid Density
ρG = Vapor Density

The capacity factor is determined through experience and for each application, and is influenced by type and style of mesh or vane targets used, the geometry of the targets (vertical or horizontal relative to the vapor flow), as well as by properties such as operating pressure, fluid viscosities, and liquid surface tension.

The design velocity V_d for a given application is the value that produces the best performance in terms of capturing droplets and avoiding re-entrainment. Referring to Figure 8, this ideal velocity* for a given class of mist eliminators would be somewhere toward the upper end of the range: about 10 fps for plain wire mesh pads, about 8.5 fps for co-knits, and 14 fps for PlatePak™ elements. As discussed, effectiveness drops off at lower velocities as the droplets have sufficiently low momentum to negotiate paths through the targets, and at higher velocities because the vapor carried sufficient kinetic energy to re-entrain droplets. For typical designs, acceptable velocities range between 25% to 125% of the ideal value.

The Capacity Factor may be thought of as an indication of ability of a mist eliminator to drain liquids and avoid re-entrainment under various conditions. See Table 3 for some typical baseline values.

TABLE 3
Standard Souders-Brown Coefficients (k factors) for mesh and Plate-Pak™ Units

	Pad Arrangement	k, ft/sec
1.	Horizontal Style 4CA pad	0.35
2.	Style 4CA MisterMesh® Pad	0.42
3.	Horizontal Plate-Pak™ Unit *With or without MisterMesh below*	0.50
4.	Vertical Plate-Pak™ Unit *With or without Mesh ahead*	0.65

NOTE: Water and air, room temperature, pressure below 100 psia

Note that Souders-Brown equation provides correction for only gas and liquid densities. Should any conditions exist which affects drainage or re-entrainment, the Capacity Factor must be pro-rated as appropriate.

After selecting the appropriate Capacity Factor and calculating the ideal vapor velocity, the cross-sectional area of mist eliminator is readily determined by dividing the volumetric flow rate by the velocity.

Having established this design velocity for the application, you can now predict the efficiency of a mesh pad for droplets of a particular size. This procedure is laborious and therefore well suited for a computer. The ACS MistXpert® software uses the method described below.

First, calculate the inertial parameter K as follows, using consistent units of measurement:

* For Air Water at ambient temperature and atmospheric pressure

$$K = K = [(\rho L - \rho G)Vd^2] / 9\mu D \qquad (2)$$

Where K = dimensionless inertial parameter
V =gas velocity in fps
d =Liquid droplet diameter in ft
μ =Gas viscosity in lb/ft s
D =Wire or filament diameter in ft

Use this calculated K value with Figure 10 to find the corresponding value of the impaction efficiency fraction E. From Table 1, find S, the specific surface area for the mesh style of interest.
And determine SO, of the mist eliminator perpendicular to vapor flow and with a correction factor of 0.67 to remove that portion of the knitted wire not perpendicular to the gas flow:

SO = Specific Surface Area x 1/π x Thickness (ft) x 0.67
Using these values and T, the thickness of the pad, calculate the capture efficiency:

$$\text{Efficiency \%} = 100-(100/e0.213^{ESO})$$

Where S0 = Corrected Pad Specific Surface Area
E = Impaction efficiency fraction

This efficiency is the percent of all incoming droplets of the given diameter which will be captured rather than passing through the mist eliminator. The percentage will be higher for larger droplets and lower for smaller.

FIGURE 10

DETERMINING IMPACTION EFFICIENCY FRACTION E USING INERTIAL PARAMETER K

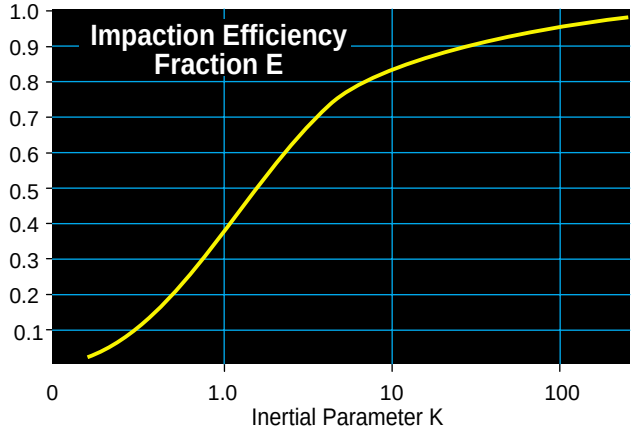

Predicting Pressure Drop

Although the operating pressure differential across a properly sized mesh pad or vane is never more than a few inches of water, pressure drop is an important design consideration in certain applications, particularly vacuum systems or larger columns requiring the movement of great quantities of gas. It has been shown that each inch of head loss requires some 0.16 hp/scfm. A simple correlation has been developed to describe the pressure drop through a dry mist eliminator (no mist):

$$\Delta P_{dry} = 0.4Vd^2 \rho_G ST/g_c \varepsilon \rho w \qquad (3)$$

Where gc =gravitational constant
ε =Mesh Void Fraction
ρ_w =Ambient water density

The overall pressure drop is the sum of the head loss incurred as the gas travels through the mesh, as well as that due to the resistance to captured liquids. Liquid accumulates as a pool in the bottom of the mist eliminator. If the liquid loading and velocity are such that a 2" deep pool accumulates in the bottom of the mesh pad, this amount must be added to that calculated using Equation 3. Figure 11 summarizes pressure drop and velocity test data collected on the ACS pilot plant for light and medium liquid loading.

With due consideration given to the mist eliminator itself, the flow of fluid to and from it requires the same attention.

Inlet Diffusers

At high flow rates, primary removal of bulk liquids upstream of the mist eliminator is very important to prevent flooding. This is typically done in a cost effective manner by using a simple inlet diverter as shown in Fig. 12.

With this design, liquids impinge upon the diverters, the flow is forced to flow laterally to allow bulk liquids to escape by gravity and eliminate the countercurrent momentum of the gas.

The *Force of Inertia*, expressed as $\rho\upsilon^2$, is typically used to quantify the flow entering a vessel to determine whether a simple baffle will suffice ACS recommends inlet diverters to a Force of Inertia up to 2,500 lb/ft s^2. Above this, more sophisticated distributors are recommended.

FIGURE 11

ACTUAL PRESSURE DROP VERSUS VELOCITY FOR TYPICAL ACS MESH PADS AT LIGHT AND MEDIUM LOADS

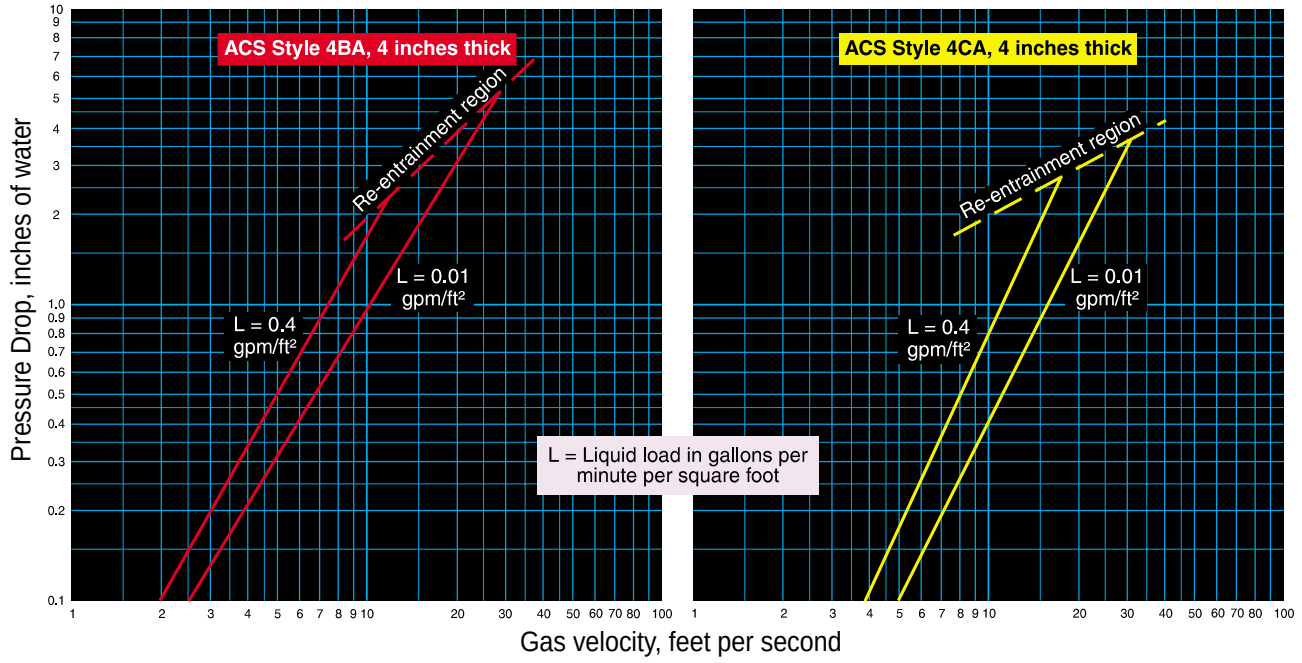

Decades ago, Dutch Shell Chemical Company introduced Schoepentoeter® style bladed designs (Fig. 12). As the fluid flows axially towards the shell opposite of the inlet nozzle, liquids are captured by specially placed blades. This design is superior because it allows the escape of liquids over a much greater region of the vessel. A simple inlet diverter (Fig. 13) would simply shear bulk liquids into smaller droplets at great flow rates:

FIGURE 12

FIGURE 13

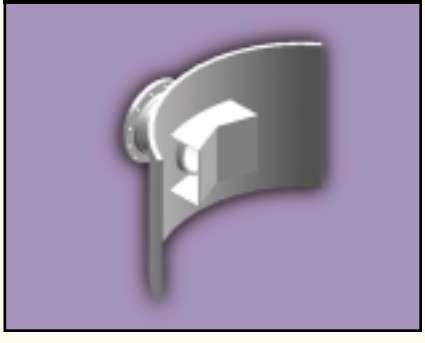

ACS AccuFlow™ Inlet Diffuser (Fig. 14) is an adaption of the bladed designs in which the body of the diffuser maintains its shape, the restriction of flow which allows the escape of liquids over the diameter of the vessel is accomplished using internal blades of concentric and decreasing cross-sectional areas.

FIGURE 14

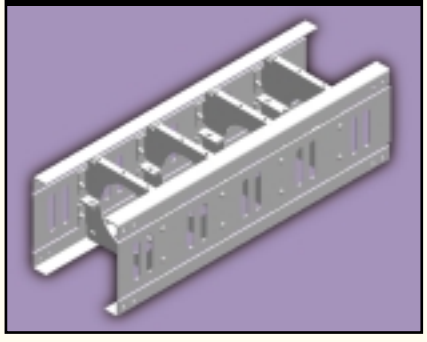

Vessel Configuration

Several factors must be considered when deciding on the configuration of vessel internals. The first step is to determine the cross-sectional area needed. Then a tentative geometry and shape appropriate for both the vessel and plant location is selected. Figure 15 shows the most typical, but by no means complete, configurations. Mist eliminators can be of virtually any size or shape to accommodate all factors.

The performance of the mist eliminator depends strongly on an even velocity distribution over the cross-sectional area. As a general rule, a distance of either half the vessel diameter is sufficient spacing both upstream and downstream of the element. Representations for specific cases are illustrated in Figure 16.

FIGURE 15

SIMPLIFIED VIEWS OF TYPICAL MIST ELIMINATOR CONFIGURATIONS IN SEPARATOR VESSELS

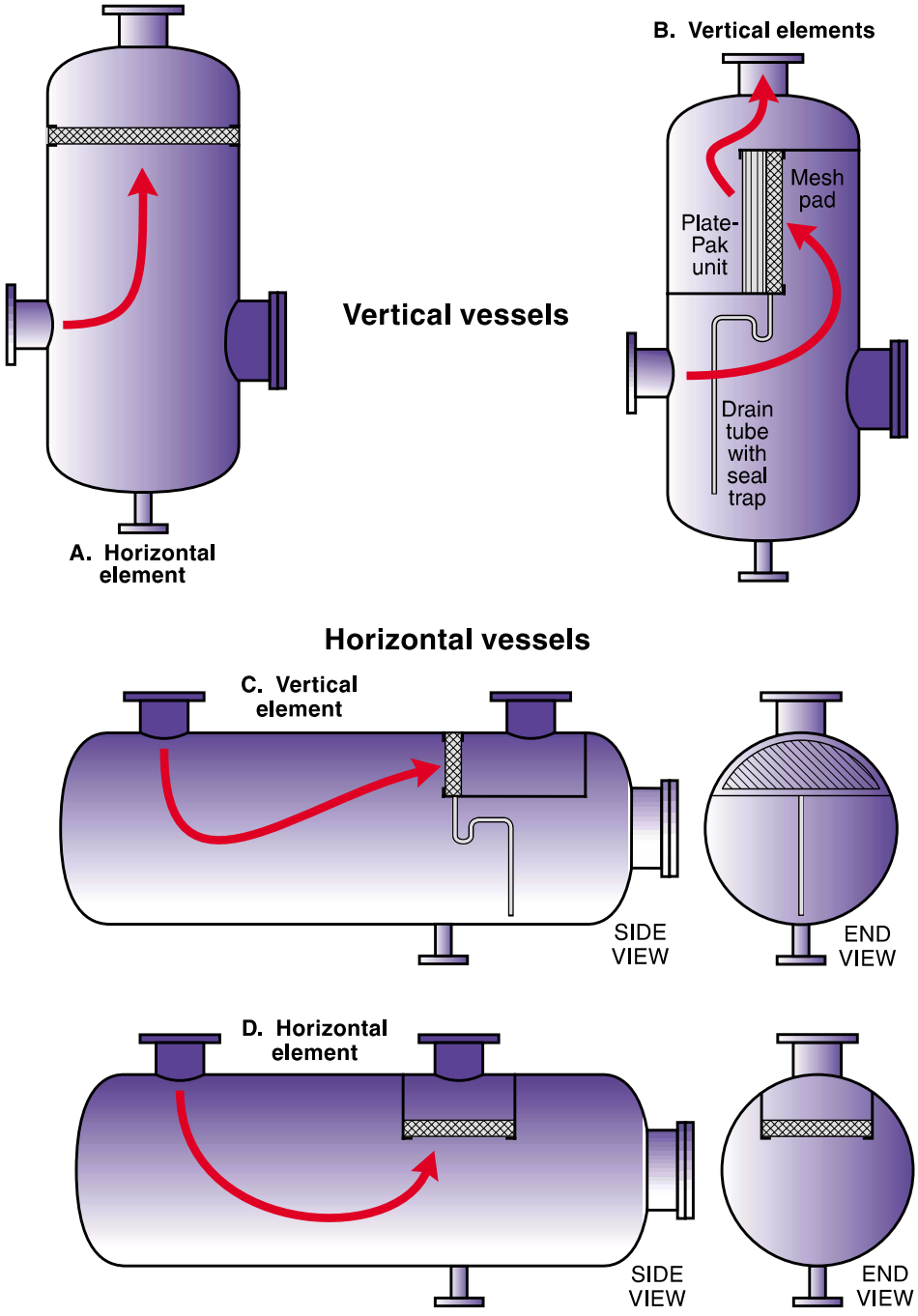

Small velocity differences are acceptable, but should be minimized at the design stage. Otherwise, some regions of the mist eliminator may be subjected to heavy loading leading to re-entrainment while other regions are unused.

Most often, the mist eliminator is located just upstream of the outlet nozzle with insufficient disengagement space. Vapor tends to channel through the pad in the region closest to the outlet nozzle and peripheral regions of the pad remain unused. To rectify this, ACS engineers apply an *Integral Flow Distributor* which is welded to region(s) of the downstream face of the pad. This technique allows the engineer to selectively increase the pressure drop through regions of the pad likely to suffer from channeling, and is cost effective.

Advanced Mist Eliminator Designs

There are several modifications to mesh pads and vanes to dramatically enhance performance.

FIGURE 16

Guidelines for maintaining even flow distribution across mesh pads or vane units with axial flow in cylindrical vessels. Height of vessel head is assumed to be 1/4 of vessel diameter. Flow distribution devices can minimize required disengement space above mesh pads. Contact ACS for assistance.

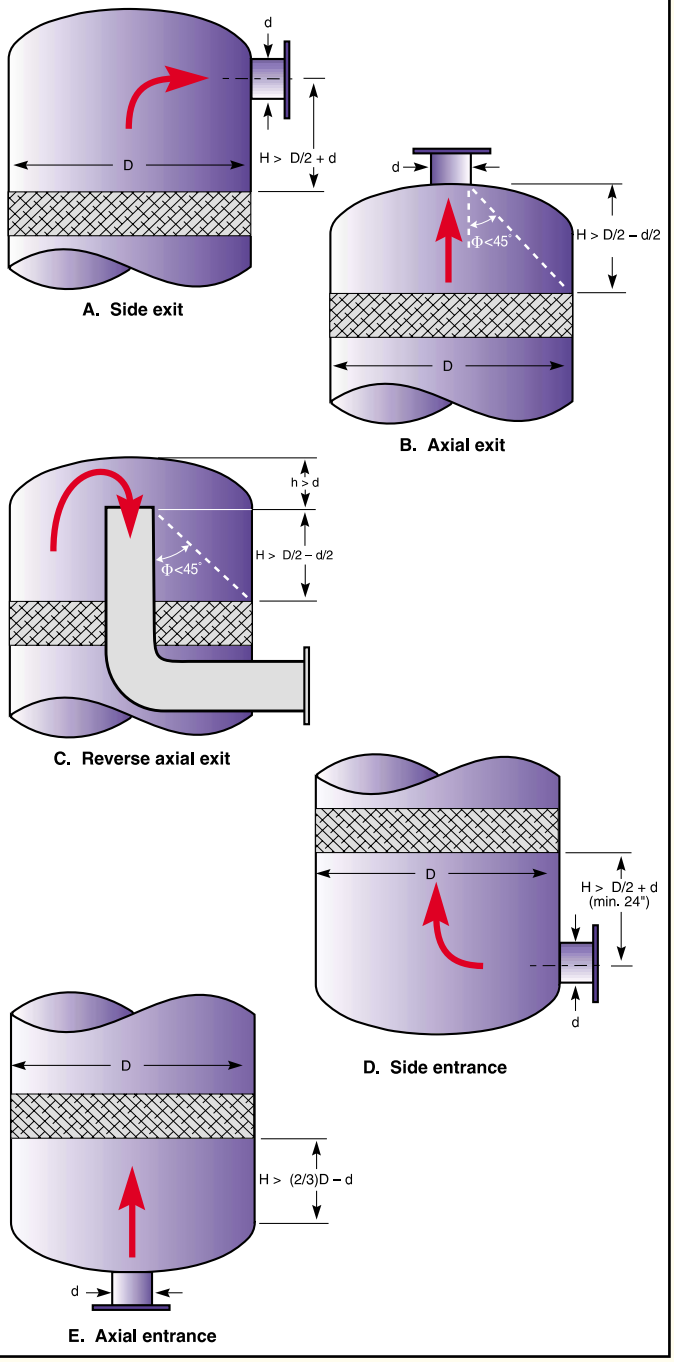

Drainage & Collection Layering

Recall the discussion on pressure drop through a mist eliminator in which liquid tends to pool in the lower layers of mesh. The simplest technique to promote drainage is to use a few inches of open, porous mesh such as ACS style 7CA (5-lb density with specific surface area as low as 45 sq-ft/cu-ft) in the upstream position. As drainage occurs through the bottom regions of the mesh, opening the knit enhances liquid drainage.

FIGURE 17

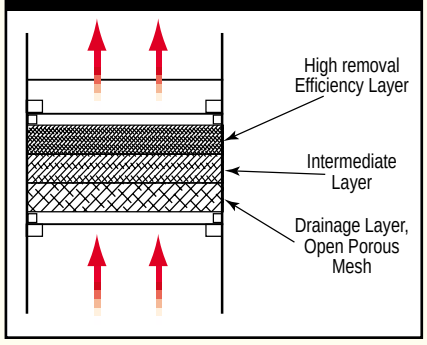

An extension of this approach is to use higher specific surface area mesh in downstream positions to enhance separation efficiency, with intermediate mesh between the collection and drainage zones. Figure 17 illustrates a Multilayer mist eliminator.

MisterMesh® Drainage Coils

A second technique used by ACS to enhance liquid drainage, and often in conjunction with multi-layering, is to append drainage coils to the upstream face of a horizontal mist eliminator as shown in Figure 18.
The coils are also made of mesh and "fill" with liquid.

FIGURE 18

Once filled, liquid from the pad above is drawn through surface tension to the coils, thereby establishing distinct regions for liquid drainage and liquid collection in the upstream layers. Figure 18 compares the pressure drop and flooding point of both conventional and MisterMesh® Mist Eliminators.

Mesh-Vane Assemblies

In grass root design of larger vessels and retrofit of existing ones to accommodate greater flow rates, mesh-vane assemblies are often used. In an assembly, mesh is placed upstream of the vane and acts as a flooded agglomerator. The Capacity Factor used corresponds to the downstream vane element. This approach combines the efficiency of mesh with the capacity of vanes and has been used by ACS engineers with tremendous success over the past two decades.

FIGURE 19

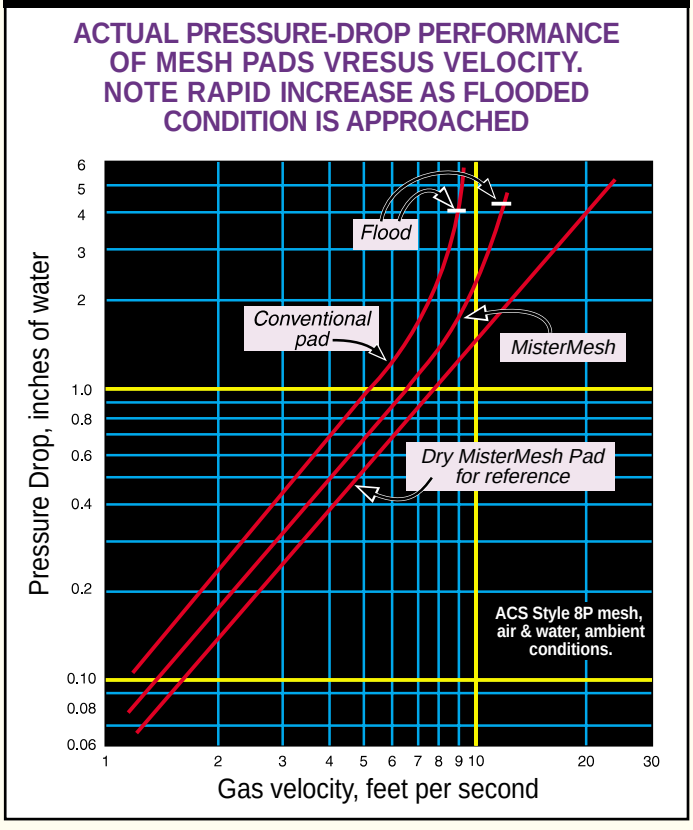

Throughout the industry there is ongoing debate as to whether the mesh should be positioned up- or downstream of the vane element. Engineers at ACS have performed exhaustive comparative testing on pilot plants and have much field data proving that the mesh is indeed affective upstream of the vane, unless the vane element is used as a pre-filter to protect a downstream mesh pad.

Use of Geometry

Another approach used in the industry when the size of the vessel is limited is to arrange the mist eliminator at an angle. The capacity increase is equal to the sine of the angle. This is shown in Figure 19 for smaller and larger diameters. An ACS engineer should be consulted for such designs.

FIGURE 20

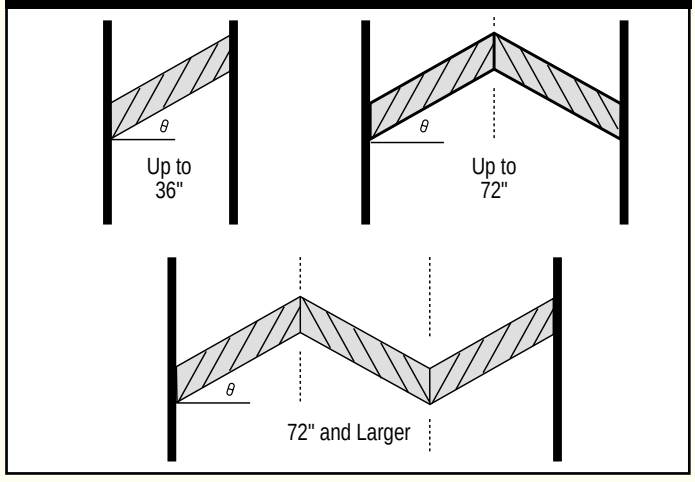

MultiPocket™ Vanes

The capacity of vertical vanes (with horizontal vapor flow) can also be increased by enhancing liquid drainage. As discussed, captured liquids are re-entrained when the velocity of vapor exceeds the ideal velocity. To prevent liquid re-entrainment, the serpentine path offered by the vane is augmented with obstructions to allow for the pooling of liquid with protection from the passing vapor stream. This design increases the capacity of the vane by as much as 45%. In vertical gas compressor knock-out drums, in which the vessel size is dictated by the capacity of the mist eliminator, MultiPocket™ Vanes considerably reduce the Foot-print and cost of skids.

Figure 21 summarizes the approaches used by ACS and the reduction in vessel dimensions possible using these advanced designs.

FIGURE 21

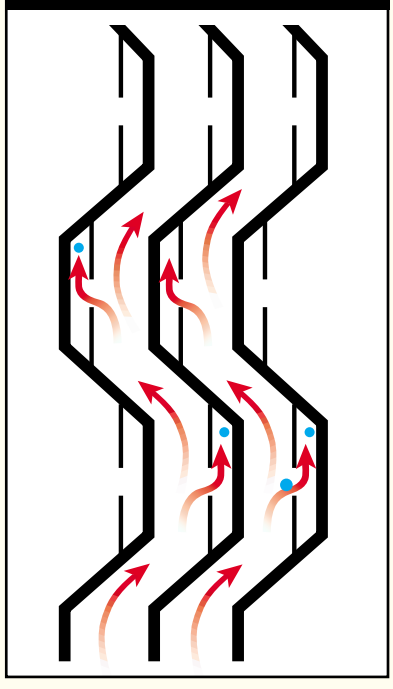

FIGURE 22

APPLYING COMBINATIONS OF ACS MESH PADS AND PLATEPAK™ VANE UNITS TO MINIMIZE VESSEL SIZE

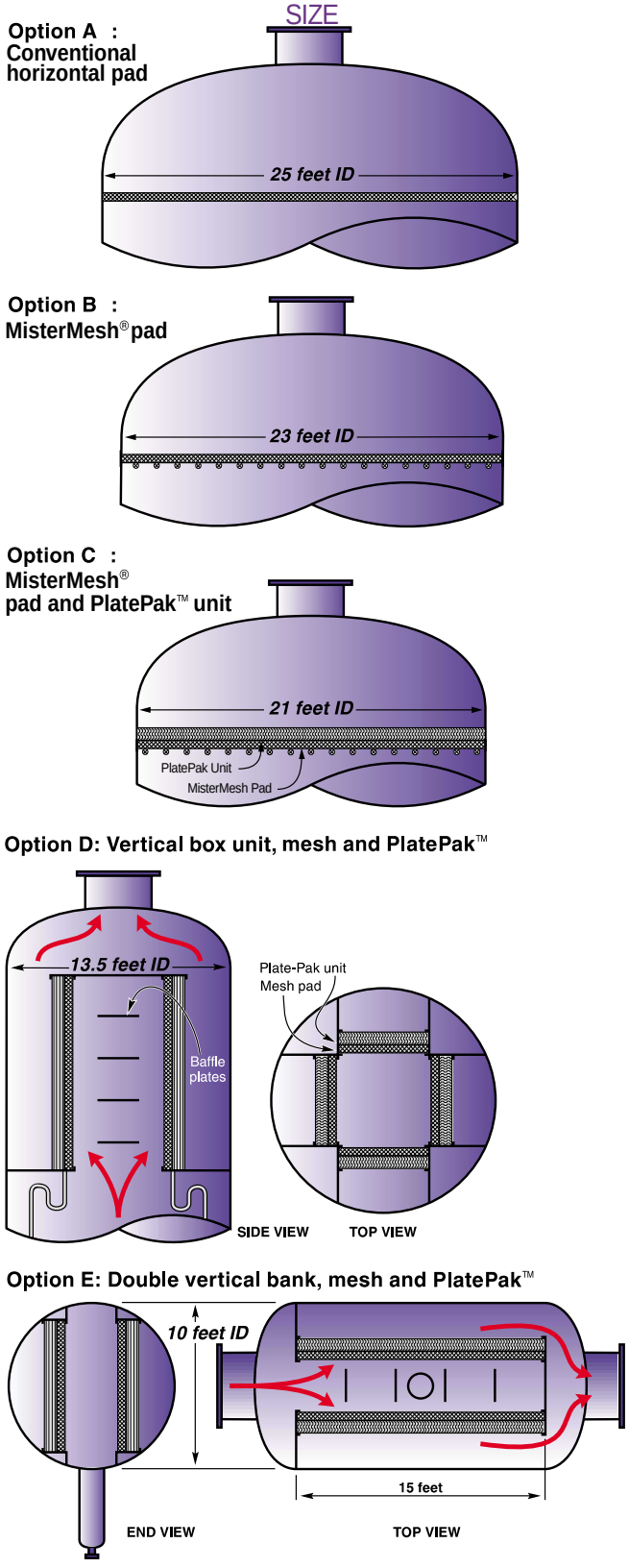

CASE STUDY #1

Problem: In an HCl scrubber, an air stream of 60 acfs is coming off a bed of random packing and contains droplets of a week acid. The unit operates at 122 psia at 82˚F. Determine the size of mist eliminator required to remove this mist and the removal efficiency possible.

Solution: Since the acid is dilute we assume the density and viscosity of water at the operating pressure and temperature:

$$\rho_L = 62.4 \text{ lb/ft}^3$$
$$\rho_G = 0.60 \text{ lb/ft}^3$$
$$P = 122 \text{ lb/ft}^2$$
$$T = 82^\circ\text{F}$$
$$F = 60 \text{ ft}^3\text{/s}$$

The first step is to select the mist eliminator type and mesh style. As shown in Figure 2, mist coming off the top of packing is typically comprised of droplets ranging in size from as small as 5 µm, so we select a mesh style mist eliminator to achieve this level of performance. From experience, the capacity factor for poly mesh at moderate liquid loading and lower pressures is ~.27 fps. Using the Souders-Brown equation the ideal velocity is calculated:

$$V_{ideal} = k\,[\,(\rho L - \rho G) / \rho G]^{1/2}$$
$$V_{ideal} = 0.27[(62.4-.060)/0.60]^{1/2}$$
$$V_{ideal} = 3.55 \text{ fps}$$

The cross-sectional area of mist eliminator is determined by dividing the volumetric flow rate by the ideal velocity:

Area Mist Eliminator = **Volumetric Flow Rate/ Superficial Vapor Velocity**

Area Mist Eliminator = **[60 ft3/s]/3.55 fps**

Area Mist Eliminator = **16.9 ft2**

The corresponding diameter is 55.67", rounded up to a standard 60" scrubber vessel. Note that performing the same calculations using a vane (and a Capacity Factor of 0.50) yields an ideal vessel diameter of 46.57", rounded up to a standard 48" ID vessel. To calculate the removal efficiency at 5 µm, several parameters must be identified to use equation 2 to determine the inertial parameter K:

$$K = [(\rho L - \rho G)Vd^2]/9\mu D$$

$$K = 0.54$$

From Figure 10, the corresponding Impaction Efficiency Fraction E is ~0.15. In the Removal Efficiency Equation there is a term for the corrected specific surface area SO:

SO= Specific Surface Area x 1/π x Thickness (ft) x 0.67

For ACS style 8P, the specific surface area is (185 + 36) = 221 ft^2/ft^3, we will try both 4" and 6" thick mist eliminator thicknesses (1/3 and 1/2ft):

$$SO = 221 \times 1/3.14 \times 1/3 \times 0.67$$

$$SO_{4"thick} = 15.7 \text{ and } SO_{6"thick} = 23.6$$

And Removal Efficiency E at 5 µm is:

$$\text{Efficiency} = 100 - 100/e^{ESO}$$

$$\text{Efficiency} = 100 - 100/e(0.15)(15.7)$$

$$\text{Efficiency} = 90.5\%$$

For the 6" thick element, the removal efficiency is 97.1%. By using a composite pad containing a 2" layer of regular monofilament polypropylene, style 8P, upstream of a 2" thick layer of 8PP, mono- and multi-filament co-knit, the removal efficiency is 99.9% .

CASE STUDY #2

Traditionally, trays are used to bring about contact between glycol and natural gas in dehydration contactors. In recent years, the industry moved towards smaller diameter columns by exploiting the higher capacities achieved with structured packing. However, the lower capital investment associated with a smaller diameter packed tower is often offset by dramatically increased glycol losses.

Consider a mid-western sour gas plant operating a 96" glycol contactor and processing 1,310,000 lb/hr of gas at 116˚F and 1214 psia. The gas and liquid specific densities were 4.4 and 68 lb/cu-ft respectively. The plant was experiencing 0.13 US gal of carryover per mmscf, amounting to some 65 gal/day of lost triethylene glycol, several hundred dollars worth per day. A 10" thick wire mesh mist eliminator of 12-lb mass density was installed above the packing.

From experience, ACS engineers knew that the droplet size distribution for glycol coming off the top of a packed dehydrator extends down to diameters of 5 µm and greater. Also, if the diameter of the packed column was sized in accordance with the hydraulic requirements of the packing, the wire mesh mist eliminator would be undersized.

The capacity factor for 12-lb density mesh in this service is ~0.23 – 0.27, having been de-rated for the high liquid viscosity of 18 cP (which retards liquid drainage) and relatively high operating pressure. Using the gas density, volumetric flow rate and cross-sectional area of the mist eliminator, the actual superficial velocity is readily calculated. Next, using known densities of the gas and glycol, the actual or operating Capacity Factor k is determined:

$$V_{actual} = k_{actual}\,[(\rho L - \rho G) / \rho G]^{1/2}$$

Re-arranging for

$$k_{actual} = V_{actual} / [(\rho L - \rho G) / \rho G]^{1/2}$$

$$= 0.44 \text{ fps}$$

A Capacity Factor of 0.44 fps is almost twice as high as the optimum, and is in the range of that of an ACS PlatePak™ Vane mist eliminator. However, the vane will not remove particles down to 5 µm, so a mesh-vane assembly was proposed. The assembly has a multilayered mesh section with open, porous mesh (ACS style 7CA) upstream of high specific surface area mesh (8D(T) co-knit of stainless and Dacron®). MisterMesh® drainage coils were appended to the bottom face of the mist eliminator. Downstream of the mesh was placed a PlatePak™ Vane. The total thickness was 12" and was accommodated using the same supports as the mist eliminator it replaced.

Carryover from a glycol contactor occurs through two mechanisms, evaporative losses and mechanical (carryover) losse). In this example, simulations showed evaporative glycol losses of 0.0054 gal/mmscfd. The total losses after the revamp were less than 0.008 gal/mmscfd, and carryover losses had been reduced from 0.13 gal/mmscfd, a 94% reduction!

SEPARATIONS & MASS-TRANSFER PRODUCTS

ACS Industries, LP • 14211 Industry Road • Houston, TX 77053

www.acsseparations.com

TECHNICAL DATA SHEET FOR MIST ELIMINATOR

14211 Industry Road
Houston, TX 77053
713 434-0934
Fax: 713 433-6201

CUSTOMER INFORMATION

Company	Contact (name/title)
Address/Location	Phone: ( )
	Fax: ( )
	Email:

STATE YOUR MIST ELIMINATOR APPLICATION

PROCESS CONDITIONS (PROVIDE WITH APPROPRIATE UNITS)

Operating Temperature: °F (°C)		Operating Pressure: psia (psig)	
Gas Type:	Flow Rate: Max: Min: lb/hr (ACFM)		
Density (or) SG (or) Mole wt.:		Compressibility:	Viscosity: cp
Liquid Type:	Quantity: Gpm	Density (or) SG:	Viscosity: cp
Solids/Foulants: yes ❑ no ❑	If yes, explain:		

VESSEL DETAIL

New ❑ Existing ❑

Diameter:	Ht./Length:
Manway Size:	Hor. ❑ Vert. ❑
Material:	Housing Reqd.? Yes ❑ No ❑

DESIRED SEPARATION

_____ % removal of _____ μ Droplets
_____ wt.% / vol% / ppm in exit gas

MIST ELIMINATOR

Preferred Type: Wire mesh ❑ Vane ❑
Materials:
Remarks:

SKETCH

Section 2 - Air Injection System

- Roots Model 59 URAI Blower Specifications & Performance Curves
- Roots Model 59 URAI Blower Modeling
- Roots Series URAI Blower Installation, Operation & Maintenance Instructions
- Marathon Model E983B Motor Specifications
- Marathon Motor Installation, Operation & Maintenance Manual
- Belts & Sheaves Information
- Stoddard Model D33H-5, Discharge Silencer Specifications
- Solberg Model FS-275P-600F Inlet Filter Specifications
- Solberg Filter Silencers & Inlet Filters Maintenance Manual
- Kunkle Model 0337-K10ANE0008 Pressure Relief Valve Specifications
- Kunkle Relief Valve Installation & Operating Instructions
- US Valve Model 09-1-0, 6" Discharge Check Valve Specifications
- US Valve Check Valve Installation & Maintenance Instructions
- DelVal Model 52-060-111-E-1-L-0 6" Butterfly Valve Specifications
- DelVal Model 52-080-111-E-1-L-0 8" Butterfly Valve Specifications
- DelVal Series 50/52 Butterfly Valve Installation, Operation & Maintenance Manual
- Stoddard Model L21-4 Bleed Silencer Specifications

ROOTS™ Universal RAI Rotary Positive Blowers

Frames 22 thru 718

OPERATING PRINCIPLE

POSITION 1 POSITION 2 POSITION 3 POSITION 4

Two figure-eight lobe impellers mounted on parallel shafts rotate in opposite directions. As each impeller passes the blower inlet, it traps a definite volume of air and carries it around the case to the blower outlet, where the air is discharged. With constant speed operation, the displaced volume is essentially the same regardless of pressure, temperature or barometric pressure.

Timing gears control the relative position of the impellers to each other and maintain small but definite clearances. This allows operation without lubrication being required inside the gas casing.

OUTLINE DRAWING & DIMENSIONAL TABLE

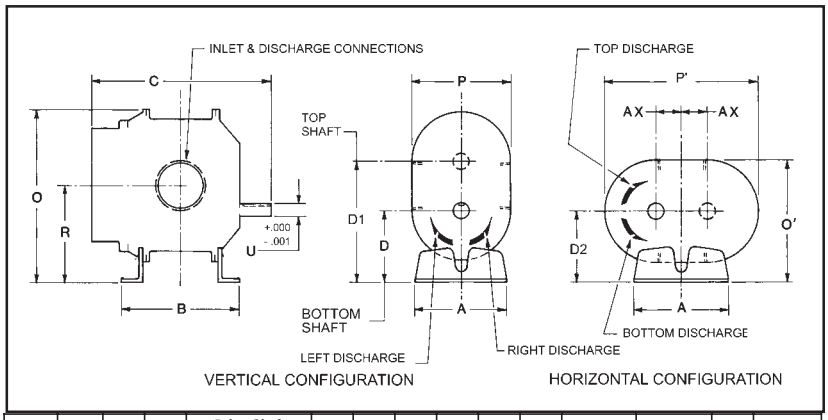

Frame Size	A	B	C	Drive Shaft Location			O	O'	P	P'	R	U	Keyway	Inlet & disch. Dia.	AX	Approx. Net Wt. (lbs.)
				D	D1	D2										
22	5.13	5.00	9.75	3.75	6.25	3.75	9.63	6.88	6.25	9.25	5.00	.625	.188 x .094	1.0 NPT	1.25	32
24	5.13	7.00	11.75	3.75	6.25	3.75	9.63	6.88	6.25	9.25	5.00	.625	.188 x .094	2.0 NPT	1.25	43
32	7.25	6.75	11.25	5.00	8.50	5.00	12.81	8.88	7.75	12.13	6.75	.750	.188 x .094	1.25 NPT	1.75	69
33	7.25	7.63	12.13	5.00	8.50	5.00	12.81	8.88	7.75	12.13	6.75	.750	.188 x .094	2.0 NPT	1.75	74
36	7.25	10.00	14.63	5.00	8.50	5.00	12.81	8.88	7.75	12.13	6.75	.750	.188 x .094	2.5 NPT	1.75	102
42	8.00	7.25	13.00	6.25	10.25	6.25	15.06	10.63	8.75	13.63	8.25	.875	.188 x .094	1.5 NPT	2.00	88
45	8.00	10.00	15.50	6.25	10.25	6.25	15.06	10.63	8.75	13.63	8.25	.875	.188 x .094	2.5 NPT	2.00	109
47	8.00	11.75	17.63	6.25	10.25	6.25	15.06	10.50	8.50	13.63	8.25	.875	.188 x .094	3.0 NPT	2.00	128
53	10.50	8.38	15.38	6.25	11.25	6.75	17.38	11.88	10.25	17.25	8.75	1.125	.250 x .125	2.5 NPT	2.50	143
[illegible]	[illegible]	[illegible]	[illegible]	[illegible]	[illegible]	[illegible]	[illegible]	[illegible]	[illegible]	[illegible]	[illegible]	[illegible]	[illegible]	[illegible]	[illegible]	[illegible]
59	10.50	14.00	21.18	6.25	11.25	6.75	17.38	12.25	11.00	17.25	8.75	1.125	.250 x .125	4.0 NPT	2.50	204
[illegible]	[illegible]	[illegible]	[illegible]	[illegible]	[illegible]	[illegible]	[illegible]	[illegible]	[illegible]	[illegible]	[illegible]	[illegible]	[illegible]	[illegible]	[illegible]	[illegible]
68	11.00*	13.00	21.38	8.75	14.75	8.75	21.63	15.13	12.75	19.75	11.75	1.375	.312 x .156	5.0 NPT	3.00	285
615	11.00*	20.00	28.38	8.75	14.75	8.75	21.63	16.25	15.00	19.75	11.75	1.375	.312 x .156	6.0 FLG	3.00	425
76	14.00**	11.75	19.94	11.00	18.00	11.00	26.13	20.69	19.38	23.25	14.50	1.562	.375 x .188	4.0 NPT	3.50	400
711	14.00**	16.75	25.19	11.00	18.00	11.00	26.13	19.50	17.00	23.25	14.50	1.562	.375 x .188	6.0 FLG	3.50	530
718	14.00**	23.75	32.19	11.00	18.00	11.00	26.13	19.50	17.00	23.25	14.50	1.562	.375 x .188	8.0 FLG	3.50	650

BASIC BLOWER DESCRIPTION

Universal RAI blowers are heavy duty rotary blowers designed with detachable rugged steel mounting feet, which permit easy in-field adaptability to either vertical or horizontal installation requirements.

Because of the detachable mounting feet, these units can be easily adapted to any of four drive shaft positions - right hand, left hand, bottom or top. The compact, sturdy design is engineered for continuous service when operated in accordance with speed and pressure ratings.

The basic model consists of a cast iron casing, carburized and ground alloy steel spur timing gears secured to steel shafts with a taper mounting and locknut, and cast iron involute impellers. Oversized antifriction bearings are used, with a cylindrical roller bearing at the drive shaft to withstand V-belt pull. The Universal RAI features thrust control, with splash oil lube on the gear end and grease lube on the drive end. After standard tests, the unit is sprayed with a protective paint and boxed or placed on skids.

Available accessories include driver, relief valve, inlet and discharge silencer, inlet filter, check valve, extended base, V-belt or flexible coupling and drive guards.

DRESSER Roots

59 URAI: Variable Speed Performance

Dresser ROOTS

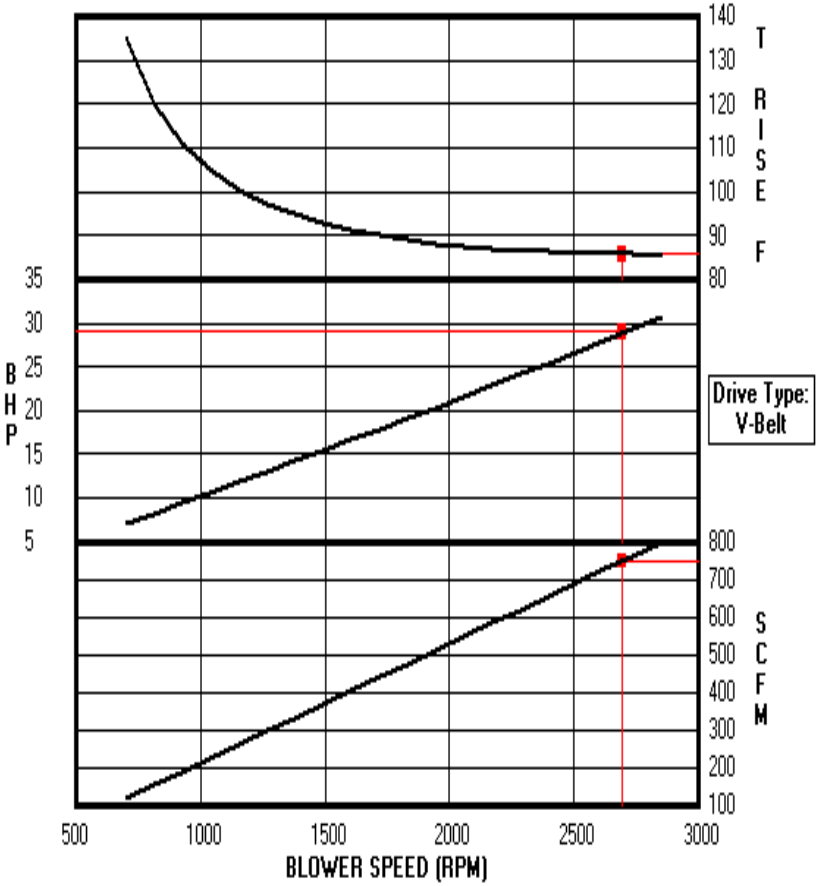

Enter a new Speed

Recalc

Close Form

Print Curve

You must press the Print Screen keyboard button before the Print Curve Button.

```
INLET CONDITIONS: AIR
                  RH = 36.00%, MW = 28.872, k = 1.396, Tin = 70 deg F
          DESIGN: Speed = 2695 RPM
                  System Inlet P = 14.7 PSIA, Inlet P Loss = 0.2 PSI
                  System Disch P = 6 PSIG, Disch P Loss = 1.0 PSI
STD:       RH = 36%, T = 68 deg F, P = 14.7 PSIA
```

Design Data

CUSTOMER: Solutia
PROJECT: W.G. Krummrich - AI (30 HP)

Company: ROOTS Division
Address: 16240 Port Northwest Drive, Houston, Texas 77041
Ph: 832-590-2305/1-877-393-7668 Fax: 832-590-2326

Customer: Solutia
Project: W.G. Krummrich - AI (30 HP)

ROOTS BLOWER PERFORMANCE SUMMARY : Program Version 6.000 Release Date 2/28/2008
Program Mode: SELECTION Run Date: 09/27/2011

AMBIENT CONDITIONS:

Gas	AIR	
Relative Humidity	36%	
Molecular Weight	28.872	
k-Value	1.396	
Specific Gravity	.997	
Ambient Temperature	90	deg F
Ambient Pressure	14.7	PSIA
Elevation	0	feet

STANDARD CONDITIONS:

Pressure	14.7	PSIA
Temperature	68	deg F
Relative Humidity	36	%

INPUT CONDITIONS:

Actual Inlet Volume	764	ICFM	+/-5 %
Standard Volume	750	SCFM	
Mass/Weight Flow	56.25	#/min	+/-5 %
System Inlet Pressure	14.7	PSIA	
Inlet Pressure Loss	0.2	PSI	
Blower Inlet Pressure	14.50	PSIA	
Blower Discharge Pressure	21.70	PSIA	
Discharge Pressure Loss	1.0	PSI	
System Discharge Pressure	6.0	PSIG	
Inlet Temperature	70	deg F	

SELECTED UNIT DETAIL:

Model	59	URAI	
Speed	2695	RPM	94.6%
Blower Differential Pressure	7.20	PSI	98.1%
Power at Blower Shaft	28.94	BHP	+/- 4%
Temperature Rise	86	deg F	38.0%
Discharge Temperature	156	deg F	
System Discharge Volume	592	ACFM	
Relief Valve Setting	NO RELIEF VALVE SPECIFIED		
V-Belt: Est. B10 Brg Life:	63142	hours	
Coupling: Est. B10 Brg Life:	63142	hours	
Est. Free Field Noise	93.2	dBa	

Measured as sound pressure level per ISO 2151:2004E with +/-3 dBA tolerance.

DRESSER Roots

The original ROOTS blower still leads the way™

Universal RAI®, URAI-DSL, URAI-J™-DSL, URAI-G™ and Metric Series

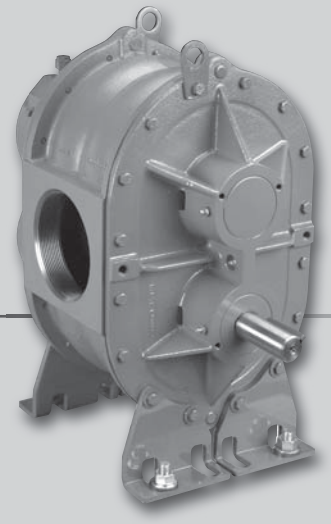

Installation, Operation & Maintenance

Contents

Information Summary 1
Safety Precautions.....3
Operating Limitations.....3
Installation 4-6
Technical Supplement for URAI-G blowers 7
Lubrication 8, 9, 17
Operation 10
Troubleshooting.....11
Inspection & Maintenance.....12
Figures 13-16
Tables 16-17
Assembly Drawings 18-23
Parts List 24-25
Basic Connection & Drive Shaft Information..... 26-28

Do These Things To Get The Most From Your ROOTS™ blower

- ❏ Check shipment for damage. If found, file claim with carrier and notify Roots.
- ❏ Unpack shipment carefully, and check contents against Packing List. Notify Roots if a shortage appears.
- ❏ Store in a clean, dry location until ready for installation. Lift by methods discussed under INSTALLATION to avoid straining or distorting the equipment. Keep covers on all openings. Protect against weather and corrosion if outdoor storage is necessary.
- ❏ Read OPERATING LIMITATIONS and INSTALLATION sections in this manual and plan the complete installation.
- ❏ Provide for adequate safeguards against accidents to persons working on or near the equipment during both installation and operation. See SAFETY PRECAUTIONS.
- ❏ Install all equipment correctly. Foundation design must be adequate and piping carefully done. Use recommended accessories for operating protection.
- ❏ **Make sure both driving and driven equipment is correctly lubricated before start-up. See LUBRICATION.**
- ❏ Read starting check points under OPERATION. Run equipment briefly to check for installation errors and make corrections. Follow with a trial run under normal operating conditions.
- ❏ In event of trouble during installation or operation, do not attempt repairs of Roots furnished equipment. Notify Roots, giving all nameplate information plus an outline of operating conditions and a description of the trouble. Unauthorized attempts at equipment repair may void Roots warranty.
- ❏ Units out of warranty may be repaired or adjusted by the owner. Good inspection and maintenance practices should reduce the need for repairs.

NOTE: Information in this manual is correct as of the date of publication. Roots reserves the right to make design or material changes without notice, and without obligation to make similar changes on equipment of prior manufacture.

For your nearest Roots Office, dial our Customer Service Hot Line toll free; 1 877 363 ROOT(S) (7668) or direct 832-590-2600.

ISRB-2002 rev. 0710

Roots products are sold subject to the current General Terms of Sale, GTS-5001 and Warranty Policy WP-5020. Copies are available upon request.
Contact your local Roots Office or Roots Customer Service Hot Line 1-877-363-ROOT(S) (7668) or direct 281-966-4700.

Safety Precautions

It is important that all personnel observe safety precautions to minimize the chances of injury. Among many considerations, the following should be particularly noted:

- Blower casing and associated piping or accessories may become hot enough to cause major skin burns on contact.
- Internal and external rotating parts of the blower and driving equipment can produce serious physical injuries. Do not reach into any opening in the blower while it is operating, or while subject to accidental starting. Protect external moving parts with adequate guards.
- Disconnect power before doing any work, and avoid bypassing or rendering inoperative any safety or protective devices.
- If blower is operated with piping disconnected, place a strong coarse screen over the inlet and avoid standing in the discharge air stream. **CAUTION: Never cover the blower inlet with your hand or other part of body.**
- Stay clear of the blast from pressure relief valves and the suction area of vacuum relief valves.
- Use proper care and good procedures in handling, lifting, installing, operating and maintaining the equipment.
- Casing pressure must not exceed 25 PSI (1725 mbar) gauge. Do not pressurize vented cavities from an external source, nor restrict the vents without first consulting Roots.
- Do not use air blowers on explosive or hazardous gases.
- Other potential hazards to safety may also be associated with operation of this equipment. All personnel working in or passing through the area should be trained to exercise adequate general safety precautions.

Operating Limitations

A ROOTS™ blower or exhauster must be operated within certain approved limiting conditions to enable continued satisfactory performance. Warranty is contingent on such operation.

Maximum limits for pressure, temperature and speed are specified in TABLE 1 for various models & sizes of blowers & exhausters. These limits apply to all units of normal construction, when operated under standard atmospheric conditions. Be sure to arrange connections or taps for instruments, thermometers and pressure or vacuum gauges at or near the inlet and discharge connections of the unit. These, along with a tachometer, will enable periodic checks of operating conditions.

PRESSURE – The pressure rise, between inlet and discharge, must not exceed the figure listed for the specific unit frame size concerned. Also, in any system where the unit inlet is at a positive pressure above atmosphere a maximum case rating of 25 PSI gauge (1725 mbar) should not be exceeded without first consulting Roots. Never should the maximum allowable differential pressure be exceeded.

On vacuum service, with the discharge to atmospheric pressure, the inlet suction or vacuum must not be greater than values listed for the specific frame size.

TEMPERATURE – Blower & exhauster frame sizes are approved only for installations where the following temperature limitations can be maintained in service:

- Measured temperature rise must not exceed listed values when the inlet is at ambient temperature. Ambient is considered as the general temperature of the space around the unit. This is not outdoor temperature unless the unit is installed outdoors.
- If inlet temperature is higher than ambient, the listed allowable temperature rise values must be reduced by 2/3 of the difference between the actual measured inlet temperature and the ambient temperature.
- The average of the inlet and discharge temperature must not exceed 250°F. (121°C).
- The ambient temperature of the space the blower/motor is installed in should not be higher than 120°F (48.8°C).

SPEED – These blowers & exhausters may be operated at speeds up to the maximum listed for the various frame sizes. They may be direct coupled to suitable constant speed drivers if pressure/temperature conditions are also within limits. At low speeds, excessive temperature rise may be a limiting factor.

Special Note: The listed maximum allowable temperature rise for any particular blower & exhauster may occur well before its maximum pressure or vacuum rating is reached. This may occur at high altitude, low vacuum or at very low speed. The units' operating limit is always determined by the maximum rating reached first. It can be any one of the three: Pressure, Temperature or Speed.

Installation

ROOTS blowers & exhausters are treated after factory assembly to protect against normal atmospheric corrosion. The maximum period of internal protection is considered to be one year under average conditions, if shipping plugs & seals are not removed. Protection against chemical or salt water atmosphere is not provided. Avoid opening the unit until ready to start installation, as corrosion protection will be quickly lost due to evaporation.

If there is to be an extended period between installation and start up, the following steps should be taken to ensure corrosion protection.

- ❏ Coat internals of cylinder, gearbox and drive end bearing reservoir with Nox-Rust VCI-10 or equivalent. Repeat once a year or as conditions may require. Nox-Rust VCI-10 is petroleum soluble and does not have to be removed before lubricating. It may be obtained from Daubert Chemical Co., 2000 Spring Rd., Oak Brook, Ill. 60521.
- ❏ Paint shaft extension, inlet and discharge flanges, and all other exposed surfaces with Nox-Rust X-110 or equivalent.
- ❏ Seal inlet, discharge, and vent openings. It is not recommended that the unit be set in place, piped to the system, and allowed to remain idle for extended periods. If any part is left open to the atmosphere, the Nox-Rust VCI-10 vapor will escape and lose its effectiveness.
- ❏ Protect units from excessive vibration during storage.
- ❏ Rotate shaft three or four revolutions every two weeks.
- ❏ Prior to start up, remove flange covers on both inlet and discharge and inspect internals to insure absence of rust. Check all internal clearances. Also, at this time, remove gearbox and drive end bearing cover and inspect gear teeth and bearings for rust.

Because of the completely enclosed unit design, location of the installation is generally not a critical matter. A clean, dry and protected indoor location is preferred. However, an outdoor location will normally give satisfactory service. Important requirements are that the correct grade of lubricating oil be provided for expected operating temperatures, and that the unit be located so that routine checking and servicing can be performed conveniently. Proper care in locating driver and accessory equipment must also be considered.

Supervision of the installation by a ROOTS Service Engineer is not usually required for these units. Workmen with experience in installing light to medium weight machinery should be able to produce satisfactory results. Handling of the equipment needs to be accomplished with care, and in compliance with safe practices. Unit mounting must be solid, without strain or twist, and air piping must be clean, accurately aligned and properly connected.

Bare-shaft Units: Two methods are used to handle a unit without base. One is to use lifting lugs bolted into the top of the unit headplates. Test them first for tightness and fractures by tapping with a hammer. In lifting, keep the direction of cable pull on these bolts as nearly vertical as possible. If lifting lugs are not available, lifting slings may be passed under the cylinder adjacent to the headplates. Either method prevents strain on the extended drive shaft.

Packaged Units: When the unit is furnished mounted on a baseplate, with or without a driver, use of lifting slings passing under the base flanges is required. Arrange these slings so that no strains are placed on the unit casing or mounting feet, or on any mounted accessory equipment. DO NOT use the lifting lugs in the top of the unit headplates.

Before starting the installation, remove plugs, covers or seals from unit inlet and discharge connections and inspect the interior completely for foreign material. If cleaning is required, finish by washing the cylinder, headplates and impeller thoroughly with an appropriate solvent. Turn the drive shaft by hand to make sure that the impellers turn freely at all points. Anti-rust compound on the connection flanges and drive shaft extension may also be removed at this time with the same solvent. Cover the flanges until ready to connect piping.

Mounting

Care will pay dividends when arranging the unit mounting. This is especially true when the unit is a “bare-shaft” unit furnished without a baseplate. The convenient procedure may be to mount such a unit directly on a floor or small concrete pad, but this generally produces the least satisfactory results. It definitely causes the most problems in leveling and alignment and may result in a “Soft Foot” condition. Correct soft foot before operation to avoid unnecessary loading on the casing and bearings. Direct use of building structural framing members is not recommended.

For blowers without a base, it is recommended that a well anchored and carefully leveled steel or cast iron mounting plate be provided. The plate should be at least 1 inch (25 mm) thick, with its top surface machined flat, and large enough to provide leveling areas at one side and one end after the unit is mounted. It should have properly sized studs or tapped holes located to match the unit foot drilling. Proper use of a high quality machinist’s level is necessary for adequate installation.

With the mounting plate in place and leveled, set the unit on it without bolting and check for rocking. If it is not solid, determine the total thickness of shims required under one foot to stop rocking. Place half of this under each of the diagonally-opposite short feet, and tighten the mounting studs or screws. Rotate the drive shaft to make sure the impellers turn freely. If the unit is to be direct coupled to a driving motor, consider the height of the motor shaft and the necessity for it to be aligned very accurately with the unit shaft. Best unit arrangement is directly bolted to the mounting plate while the driver is on shims of at least 1/8 inch (3mm) thickness. This allows adjustment of motor position in final shaft alignment by varying the shim thickness.

Aligning

When unit and driver are factory mounted on a common baseplate, the assembly will have been properly aligned and is to be treated as a unit for leveling purposes. Satisfactory installation can be obtained by setting the baseplate on a concrete

slab that is rigid and free of vibration, and leveling the top of the base carefully in two directions so that it is free of twist. The slab must be provided with suitable anchor bolts. The use of grouting under and partly inside the leveled and shimmed base is recommended.

It is possible for a base-mounted assembly to become twisted during shipment, thus disturbing the original alignment. For this reason, make the following checks after the base has been leveled and bolted down. Disconnect the drive and rotate the unit shaft by hand. It should turn freely at all points. Loosen the unit foot hold-down screws and determine whether all feet are evenly in contact with the base. If not, insert shims as required and again check for free impeller rotation. Finally, if unit is direct coupled to the driver, check shaft and coupling alignment carefully and make any necessary corrections.

In planning the installation, and before setting the unit, consider how piping arrangements are dictated by the unit design and assembly. Drive shaft rotation must be established accordingly and is indicated by an arrow near the shaft.

Typical arrangement on vertical units has the drive shaft at the top with counterclockwise rotation and discharge to the left. Horizontal units are typically arranged with the drive shaft at the left with counterclockwise rotation and discharge down. See Figure 4 for other various unit arrangements and possible conversions.

When a unit is DIRECT COUPLED to its driver, the driver RPM must be selected or governed so as not to exceed the maximum speed rating of the unit. Refer to Table 1 for allowable speeds of various unit sizes.

A flexible type coupling should always be used to connect the driver and unit shafts.

When direct coupling a motor or engine to a blower you must insure there is sufficient gap between the coupling halves and the element to prevent thrust loading the blower bearings. When a motor, engine or blower is operated the shafts may expand axially. If the coupling is installed in such a manner that there is not enough room for expansion the blower shaft can be forced back into the blower and cause the impeller to contact the gear end headplate resulting in damage to the blower. The two shafts must be in as near perfect alignment in all directions as possible, and the gap must be established with the motor armature on its electrical center if end-play exists. Coupling manufacturer's recommendations for maximum misalignment, although acceptable for the coupling, are normally too large to achieve smooth operation and maximum life of the blower.

The following requirements of a good installation are recommended. When selecting a coupling to be fitted to the blower shaft ROOTS recommends a taper lock style coupling to insure proper contact with the blower shaft. If the coupling must have a straight bore the coupling halves must be fitted to the two shafts with a line to line thru .001" interference fit. Coupling halves must be warmed up per coupling manufacturer's recommendations. Maximum deviation in offset alignment of the shafts should not exceed .005" (.13 mm) total indicator reading, taken on the two coupling hubs. Maximum deviation from parallel of the inside coupling faces should not exceed .001" (.03 mm) when checked at six points around the coupling.

When a unit is BELT DRIVEN, the proper selection of sheave diameters will result in the required unit speed. When selecting a sheave to be fitted to the blower shaft ROOTS recommends a taper lock style sheave to insure proper contact with the blower shaft. This flexibility can lead to operating temperature problems caused by unit speed being too low. Make sure the drive speed selected is within the allowable range for the specific unit size, as specified under Table 1.

Belt drive arrangements usually employ two or more V-belts running in grooved sheaves. Installation of the driver is less critical than for direct coupling, but its shaft must be level and parallel with the unit shaft. **The driver should be mounted on the inlet side of a vertical unit (horizontal piping) and on the side nearest to the shaft on a horizontal unit. SEE PAGE 6 - Acceptable Blower Drive Arrangement Options.** The driver must also be mounted on an adjustable base to permit installing, adjusting and removing the V-belts. To position the driver correctly, both sheaves need to be mounted on their shafts and the nominal shaft center distance known for the belt lengths to be used.

CAUTION: Drive couplings and sheaves (pulleys) should have an interference fit to the shaft of the blower (set screw types of attachment generally do not provide reliable service.) It is recommended that the drive coupling or sheave used have a taper lock style bushing which is properly sized to provide the correct interference fit required. Drive couplings, that require heating to fit on the blower shaft, should be installed per coupling manufacturer recommendations. A drive coupling or sheave should not be forced on to the shaft of the blower as this could affect internal clearances resulting in damage to the blower.

Engine drive applications often require special consideration to drive coupling selection to avoid harmful torsional vibrations. These vibrations may lead to blower damage if not dampened adequately. It is often necessary to install a fly-wheel and/or a torsionally soft elastic element coupling based on the engine manufacturer recommendations.

The driver sheave should also be mounted as close to its bearing as possible, and again should fit the shaft correctly. Position the driver on its adjustable base so that 2/3 of the total movement is available in the direction away from the unit, and mount the assembly so that the face of the sheave is accurately in line with the unit sheave. This position minimizes belt wear, and allows sufficient adjustment for both installing and tightening the belts. After belts are installed, adjust their tension in accordance with the manufacturer's instructions. However, only enough tension should be applied to prevent slippage when the unit is operating under load. Excessive tightening can lead to early bearing concerns or shaft breakage.

Before operating the drive under power to check initial belt tension, first remove covers from the unit connections. Make sure the interior is still clean, then rotate the shaft by hand.

Acceptable Blower Drive Arrangement Options

Acceptable

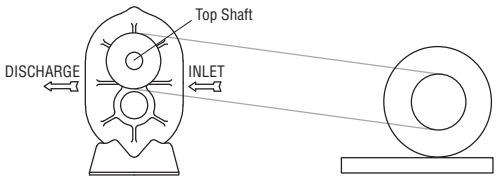

Motor On Inlet Side of Blower (Top Shaft)

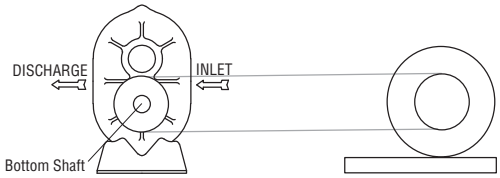

Motor On Inlet Side of Blower (Bottom Shaft)

Unacceptable

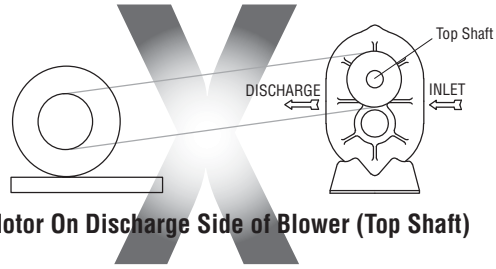

Motor On Discharge Side of Blower (Top Shaft)

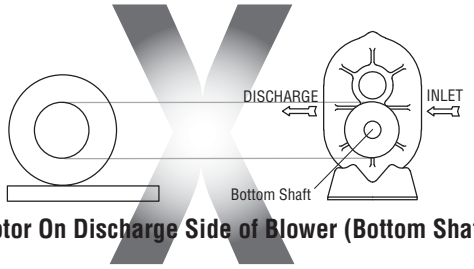

Motor On Discharge Side of Blower (Bottom Shaft)

Place a coarse screen over the inlet connection to prevent anything being drawn into the unit while it is operating, and avoid standing in line with the discharge opening. Put oil in the sumps per instructions under **LUBRICATION**.

Piping

Before connecting piping, remove any remaining anti-rust compound from unit connections. Clean pipe should be no smaller than unit connections. In addition, make sure it is free of scale, cuttings, weld beads, or foreign material of any kind. To further guard against damage to the unit, especially when an inlet filter is not used, install a substantial screen of 16 mesh backed with hardware cloth at or near the inlet connections. Make provisions to clean this screen of collected debris after a few hours of operation. It should be removed when its usefulness has ended, as the wire will eventually deteriorate and small pieces going into the unit may cause serious damage.

Pipe flanges or male threads must meet the unit connections accurately and squarely. DO NOT attempt to correct misalignment by springing or cramping the pipe. In most cases this will distort the unit casing and cause impeller rubbing. In severe cases it can prevent operation or result in a broken drive shaft. For similar reasons, piping should be supported near the unit to eliminate dead weight strains. Also, if pipe expansion is likely to occur from temperature change, installation of flexible connectors or expansion joints is advisable.

Figure 3 represents an installation with all accessory items that might be required under various operating conditions. Inlet piping should be completely free of valves or other restrictions. When a shut-off valve can not be avoided, make sure a full size vacuum relief is installed nearest the unit inlet. This will protect against unit overload caused by accidental closing of the shut-off valve.

Need for an inlet silencer will depend on unit speed and pressure, as well as sound-level requirements in the general surroundings. An inlet filter is recommended, especially in dusty or sandy locations. A discharge silencer is also normally suggested, even though WHISPAIR™ units operate at generally lower noise levels than conventional rotary blowers. Specific recommendations on silencing can be obtained from your local ROOTS distributor.

Discharge piping requires a pressure relief valve, and should include a manual unloading valve to permit starting the unit under no-load conditions. Reliable pressure/vacuum gauges and good thermometers at both inlet and discharge are recommended to allow making the important checks on unit operating conditions. The back-pressure regulator shown in Figure 3 is useful mainly when volume demands vary while the unit operates at constant output. If demand is constant, but somewhat lower than the unit output, excess may be blown off through the manual unloading valve.

In multiple unit installations where two or more units operate with a common header, use of check valves is mandatory. These should be of a direct acting or free swinging type, with one valve located in each line between the unit and header. Properly installed, they will protect against damage from reverse rotation caused by air and material back-flow through an idle unit.

After piping is completed, and before applying power, rotate the drive shaft by hand again. If it does not move with uniform freedom, look for uneven mounting, piping strain, excessive belt tension or coupling misalignment.

DO NOT operate the unit at this time unless it has been lubricated per instructions.

Technical Supplement for URAI-G™ Gas Blowers

Technical Supplement for 32, 33, 36, 42, 45, 47, 53, 56, 59, 65, 68, 615 Universal RAI-GAS blowers

Precaution: URAI-GAS blowers: Care must be used when opening the head plate seal vent chamber plugs (43) as some gas will escape–if it is a pressure system, or the atmospheric air will leak into the blower if the system is under vacuum. There is a possibility of some gas leakage through the mechanical seals. This leakage on the gear end will escape through the gear box vent, and on the drive end, through the grease release fittings. If the gas leakage is undesirable, each seal chamber must be purged with an inert gas through one purge gas hole (43) per seal. There are two plugged purge gas holes (1/8 NPT) provided per seal. The purge gas pressure must be maintained one PSI above the discharge gas pressure. Also, there exists a possibility of gear end oil and drive end grease leakage into the gas stream.

ROOTS Universal RAI-GAS rotary positive gas blowers are a design extension of the basic Universal RAI blower model. URAI-GAS blower uses (4) mechanical seals in place of the standard inboard lip seals to minimize gas leakage into the atmosphere.

These units are intended for gases which are compatible with cast iron case material, steel shafts, 300/400 series stainless steel and carbon seal components, viton o-rings and the oil/grease lubricants. If there are any questions regarding application or operation of this gas blower, please contact factory.

A simple but very effective lubrication system is employed on the drive shaft end bearings. Hydraulic pressure relief fittings are provided to vent any excess grease, preventing pressure build-up on the seals. A restriction plug and metering orifice prevent loss of lubricant from initial surges in lubricant pressure but permit venting excess lubricant under steadily rising pressures.

Using a pressure gun, slowly force new lubricant into each drive end bearing housing until traces of clean grease comes out of the relief fitting. The use of an electric or pneumatic grease gun could force the grease in too rapidly and thus invert the seals and should not be used.

Gear end bearings, gears and oil seals are lubricated by the action of the timing gears which dip into the main oil sumps causing oil to splash directly on gears and into bearings and seals. A drain port is provided below each bearing to prevent an excessive amount of oil in the bearings. Seals located inboard of the bearings in each headplate effectively retain oil within the sumps. Any small weepage that may occur should the seals wear passes into a cavity in each vented headplate and is drained downward.

Proper lubrication is usually the most important single consideration in obtaining maximum service life and satisfactory operation from the unit. Unless operating conditions are severe, a weekly check of oil level and necessary addition of lubricant should be sufficient.

During the first week of operation, check the oil levels in the oil sumps about once a day, and watch for leaks. Replenish as necessary. Thereafter, an occasional check should be sufficient.

More frequent oil service may be necessary if the blower is operated in a very dusty location.

Lubrication

Due to sludge build-up and seal leakage problems, Roots recommendation is DO NOT USE Mobil SHC synthetic oils in ROOTS blowers.

Proper lubrication is usually the most important single consideration in obtaining maximum service life and satisfactory operation from the unit.

URAI AIR and GAS gear end bearing lubrication/oil with splash lubrication on the gear end only (Drive end grease lubricated).

- The specified and recommended oil is ROOTS™ Synthetic oil of correct viscosity per Table 2, page 17.
- To fill the gearbox, remove the breather plug (25) and the oil overflow plug (21) - see page 15. Fill the reservoir up to the overflow hole. **DO NOT OVERFILL**. Place the breather and the overflow plug back into their respective holes.
- The lubrication should be changed after initial 100 hours of operation.
- Proper service intervals of the oil thereafter are based on the discharge air temperature of the blower. Please refer to the information below to "How to properly determine the oil service intervals" shown on this page.
- Unless operating conditions are quite severe, a weekly check of the oil level and necessary addition of lubricant should be sufficient. During the first week of operation, check the oil levels in the oil sumps about once a day, and watch for leaks. Replenish as necessary.
- If you choose to use another oil other than the specified and recommended ROOTS™ Synthetic, use a good grade of industrial type non-detergent, rust inhibiting, anti-foaming oil and of correct viscosity per Table 2, page 17.
- Roots does NOT recommend the use of automotive type lubricants, as they are not formulated with the properties mentioned above.

URAI-DSL blowers with splash lubrication/oil on each end. No grease.

- The specified and recommended oil is ROOTS™ Synthetic oil of correct viscosity per Table 2, page 17.
- The proper oil level should be half way or middle of the sight gauge when the blower is not operating. **DO NOT OVERFILL OIL SUMP/S** as damage to the blower may occur.
- Oil level may rise or fall in the gauge during operation to an extent depending somewhat on oil temperature and blower speed.
- The oil level should not fall below the middle of the site gauge when the blower is idle.
- The lubrication/oil level may rise or fall in the gauge during operation to an extent depending somewhat on oil temperature and blower speed.
- The lubrication should be changed after initial 100 hours of operation.
- Proper service intervals of the oil thereafter are based on the discharge air temperature of the blower. Please refer to the information below to "How to properly determine the oil service intervals" shown on this page
- Unless operating conditions are quite severe, a weekly check of the oil level and necessary addition of lubricant should be sufficient. During the first week of operation, check the oil levels in the oil sumps about once a day, and watch for leaks. Replenish as necessary.
- If you choose to use another oil other than the specified and recommended ROOTS™ Synthetic, use a good grade of **industrial type** non-detergent, rust inhibiting, anti-foaming oil and of correct viscosity per Table 2, page 17.
- Roots does **NOT** recommend the use of automotive type lubricants, as they are not formulated with the properties mentioned above.

How to properly determine the oil service intervals.

Normal life expectancy of the specified and recommended ROOTS™ Synthetic oil is approximately 6000 hours with an oil temperature of 180°F (82°C) or less. As the oil temperature increases by increments of 15°F (8°C), the oil life is reduced by half for each 15°F (8°C) increase. Example: Oil temperatures of 195°F (90.5°C) will produce a life expectancy reduced by half or 3000 hours oil service life.

Normal life expectancy of petroleum based oils is about 2000 hours with an oil temperature of about 180°F (82°C). As the oil temperature increases by increments of 15°F (8°C), the life is reduced by half for each 15°F (8°C) increase. Example: Oil temperatures of 195°F (90.5°C) will produce life expectancy reduced by half or 1000 hours oil service life.

NOTE: To estimate oil temperature, multiply the discharge temperature of the blower by 0.80. Example: if the discharge air temperature of the blower is 200° F, it is estimated that the oil temperature is 160° F

For Units with grease lubricated drive end bearings.

URAI AIR (Non GAS) blower grease specifications.

- When servicing drive end bearings of a AIR (Non Gas) blower, use the specified and recommended Shell Darina SD 2 NLGI #2 product code 5067628.
- For grease lubricated drive end blowers see page 17, table 4, regarding specified greasing intervals.
- Lithium based greases are not compatible with the specified and recommended Shell Darina SD 2 grease used when assembling the blower. **Lithium based grease is not approved for any ROOTS blowers.**
- Table 4 page 17 has been prepared as a general greasing schedule guide based on average operating conditions. More frequent intervals may be necessary

depending on the grease operating temperature and unusual circumstances.

URAI GAS blower grease specifications.

- When servicing drive end bearings of a URAI GAS blower, use the specified NLGI #2 premium grade aluminum complex* grease, ROOTS P/N T20019001.
- Lithium based greases are not compatible with the specified and recommended ROOTS Synthetic grease used when assembling a GAS blower. **Lithium based grease is not approved for any ROOTS blowers.**
- Lithium based greases are not compatible with the specified and recommended ROOTS Synthetic grease used when assembling a GAS blower. **Lithium based grease is not approved for any ROOTS blowers.**
- The lubricants selected must be compatible with the gas.

*ROOTS Synthetic Oil & Grease is superior in performance to other synthetic lubrications. It has high oxidation stability, excellent corrosion protection, extremely high film strength and low coefficient of friction.

*ROOTS™ Synthetic oil is superior in performance to petroleum based products. It has high oxidation stability, excellent corrosion protection, extremely high film strength and low coefficient of friction. Typical oil change intervals are increased 2-3 times over petroleum based lubricants. Also, ROOTS™ Synthetic oil is 100% compatible with petroleum based oils. Simply drain the oil in the blower and refill the reservoirs with ROOTS™ Synthetic oil to maintain optimum performance of your ROOTS™ blower.

Operation

Before operating a blower under power for the first time, recheck the unit and the installation thoroughly to reduce the likelihood of avoidable troubles. Use the following procedure check list as a guide, but consider any other special conditions in the installation.

- ❏ Be certain that no bolts, tools, rags, or debris have been left in the blower air chamber or piping.
- ❏ If an outdoor intake without filter is used, be sure the opening is located so it cannot pick up dirt and is protected by a strong screen or grille. Use of the temporary protective screen as described under INSTALLATION is strongly recommended.
- ❏ Recheck blower leveling, drive alignment and tightness of all mounting bolts if installation is not recent. If belt drive is used, adjust belt tension correctly.
- ❏ Turn drive shaft by hand to make sure impellers still rotate without bumping or rubbing at any point.
- ❏ Ensure oil levels in the main oil sumps are correct.
- ❏ Check lubrication of driver. If it is an electric motor, be sure that power is available and that electrical overload devices are installed and workable.
- ❏ Open the manual unloading valve in the discharge air line. If a valve is in the inlet piping, be sure it is open.
- ❏ Bump blower a few revolutions with driver to check that direction of rotation agrees with arrow near blower shaft, and that both coast freely to a stop.

After the preceding points are cleared, blower is ready for trial operation under “no-load” conditions. The following procedure is suggested to cover this initial operation test period.

a. Start blower, let it accelerate to full speed, then shut off. Listen for knocking sounds, both with power on and as speed slows down.

b. After blower comes to a complete stop, repeat above, but let blower run 2 or 3 minutes. Check for noises, such as knocking sounds.

c. After blower comes to a complete stop, operate blower for about 10 minutes unloaded. Check oil levels. Observe cylinder and headplate surfaces for development of hot spots such as burned paint, indicating impeller rubs. Be aware of any noticeable increase in vibration.

Assuming that all trials have been satisfactory, or that necessary corrections have been made, the blower should now have a final check run of at least one hour under normal operating conditions. After blower is restarted, gradually close the discharge unloading valve to apply working pressure. At this point it is recommended that a pressure gauge or manometer be connected into the discharge line if not already provided, and that thermometers be in both inlet and discharge lines. Readings from these instruments will show whether pressure or temperature ratings of the blower are being exceeded.

During the final run, check operating conditions frequently and observe the oil levels at reasonable intervals. If excessive noise or local heating develops, shut down immediately and determine the cause. If either pressure rise or temperature rise across the blower exceeds the limit specified in this manual, shut down and investigate conditions in the piping system. Refer to the TROUBLESHOOTING CHECKLIST for suggestions on various problems that may appear.

The blower should now be ready for continuous duty operation at full load. During the first few days make periodic checks to determine whether all conditions remain steady, or at least acceptable. This may be particularly important if the blower is supplying air to a process system where conditions can vary. At the first opportunity, stop the blower and clean the temporary inlet protective screen. If no appreciable amount of debris has collected, the screen may be removed. See comments under INSTALLATION. At this same time, verify leveling, coupling alignment or belt tension, and mounting bolt tightness.

Should operating experience prove that blower capacity is a little too high for the actual air requirements, a small excess may be blown off continuously through the manual unloading or vent valve. Never rely on the pressure relief valve as an automatic vent. Such use may cause the discharge pressure to become excessive, and can also result in unsafe operation of the valve itself. If blower capacity appears to be too low, refer to the TROUBLESHOOTING CHECKLIST.

Vibration Assessment Criteria

With measurements taken at the bearing locations on the housings, see chart below for an appropriate assessment guide for rotary lobe blowers rigidly mounted on stiff foundations.

In general, blower vibration levels should be monitored on a regular basis and the vibration trend observed for progressive or sudden change in level. If such a change occurs, the cause should be determined through spectral analysis.

As shown on the chart below, the level of all pass vibration will determine the need to measure discrete frequency vibration levels and the action required.

All Pass Vibration (in/sec)	Discrete Frequency Vibration (in/sec)	Action
0.45 or less	N/R	Acceptable
Greater than 0.45 but 1.0 or less	0.45 or less @ any frequency	Acceptable
	Greater than 0.45 @ any frequency	Investigate
Greater than 1.0	Less than 1.0	Investigate
	Greater than 1.0	Investigate

Troubleshooting Checklist

Trouble	Item	Possible Cause	Remedy
No flow	1	Speed too low	Check by tachometer and compare with published performance.
	2	Wrong rotation	Compare actual rotation with Figure 1, change driver if wrong.
	3	Obstruction in piping	Check piping, valves, silencer to assure open flow path.
Low capacity	4	Speed too low	See item 1, if belt drive, check for slippage and re-adjust tension.
	5	Excessive pressure rise	Check inlet vacuum and discharge pressure and compare with published performance.
	6	Obstruction in piping	See item 3.
	7	Excessive slip	Check inside of casing for worn or eroded surfaces causing excessive clearances
Excessive power	8	Speed too high	Check speed and compare with published performance.
	9	Excessvie pressure rise	See item 5
	10	Impeller rubbing	Inspect outside of cylinder for high temperature areas, then check for impeller contact at these points. Correct blower mounting, drive alignment.
	11	Scale , sludge, rust or product build up	Clean blower appropriately
Damage to bearings or gears	12	Inadequate lubrication	Check oil sump levels in gear and drive end headplates
	13	Excessive lubrication	Check oil levels. If correct, drain and refill with clean oil of recommended grade.
	14	Excessive pressure rise	See item 5.
	15	Coupling misalignment	Check carefully. Re-align if questionable.
	16	Excessive belt tension	Re-adjust for correct tension.
Vibration	17	Misalignment	See item 15
	18	Impellers rubbing	See item 10
	19	Worn bearings/gears	Check gear backlash and conditions of bearings and replace as indicated.
	20	Unbalanced or rubbing impeller	Scale or process material may build up on casing and impellers, or inside impellers. Remove build-up to restore original clearances and impeller balance.
	21	Driver or blower loose	Tighten mounting bolts securely.
	22	Piping resonances	Determine whether standing wave pressure pulsations are present in the piping.
	23	Scale/sludge build-ups	Clean out interior of impeller lobes to restore dynamic balance.
Driver stops, or will not start	24	Casing strain	Re-work piping alignment to remove excess strain
	25	Impeller stuck	Check for excessive hot spot on headplate or cynlinder. See item 10. Look for defective shaft bearing and/or gear teeth.
	26	Scale, sludge, rust or prodcut build-up	Clean blower appropiately
Excessive breather	27	Broken seal	Replace seals
Blow-by or excessive oil leakage to vent area	28	Defective O-ring	Replace seals and O-ring
Excessive oil leakage in vent area	29	Defective/plugged breather	Replace breather and monitor oil leakage
	30	Oil level too high	Check sump levels in gear and drive headplates
	31	Oil type or viscosity incorrect	Check oil to ensure it meets recommendations. Drain then fill with clean oil of recommended grade.
	32	Blower running hot	Check blower operating conditions to ensure they are within the operating limitations defined in this manual.

Inspection & Maintenance : Universal RAI® series blowers

A good program of consistent inspection and maintenance is the most reliable method of minimizing repairs to a blower. A simple record of services and dates will help keep this work on a regular schedule. Basic service needs are:

- Lubrication
- Checking for hot spots
- Checking for increases or changes in vibration and noise
- Recording of operating pressures and temperatures

Above all, a blower must be operated within its specified rating limits, to obtain satisfactory service life.

A newly installed blower should be checked often during the first month of full-time operation. Attention there after may be less frequent assuming satisfactory performance. Lubrication is normally the most important consideration and weekly checks of lubricant levels in the gearbox and bearing reservoirs should be customary. Complete oil change schedules are discussed under **LUBRICATION**.

Driver lubrication practices should be in accordance with the manufacturer's instructions. If direct connected to the blower through a lubricated type coupling, the coupling should be checked and greased each time blower oil is changed. This will help reduce wear and prevent unnecessary vibration. In a belted drive system, check belt tension periodically and inspect for frayed or cracked belts.

In a new, and properly installed, unit there is no contact between the two impellers, or between the impellers and cylinder or headplates. Wear is confined to the bearings (which support and locate the shafts) the oil seals, and the timing gears. All are lubricated and wear should be minimal if clean oil of the correct grade is always used. Seals are subject to deterioration as well as wear, and may require replacement at varying periods.

Shaft bearings are designed for optimum life under average conditions with proper lubrication and are critical to the service life of the blower. Gradual bearing wear may allow a shaft position to change slightly, until rubbing develops between impeller and casing. This will cause spot heating, which can be detected by observing these surfaces. Sudden bearing failure is usually more serious. Since the shaft and impeller are no longer supported and properly located, extensive general damage to the blower casing and gears is likely to occur.

Oil seals should be considered expendable items, to be replaced whenever drainage from the headplate vent cavity becomes excessive or when the blower is disassembled for any reason. Some oil seal leakage may occur since an oil film under the lip is required for proper operation. Periodically leaked oil should be wiped off from surfaces. Minor seal leakage should not be considered as indicating seal replacement.

Timing gear wear, when correct lubrication is maintained, should be negligible. Gear teeth are cut to provide the correct amount of backlash, and gears correctly mounted on the shafts will accommodate a normal amount of tooth wear without permitting contact between lobes of the two impellers. However, too high an oil level will cause churning and excessive heating. This is indicated by unusually high temperature at the bottom of the gear housing. Consequent heating of the gears will result in loss of tooth-clearance , backlash and rapid wear of the gear teeth usually will develop. Continuation of this tooth wear will eventually produce impeller contacts (knocking), and from this point serious damage will be unavoidable if blower operation is continued. A similar situation can be produced suddenly by gear tooth fracture, which is usually brought on by sustained overloading or momentary shock loads.

Problems may also develop from causes other than internal parts failure. Operating clearances within a blower are only a few thousandths of an inch. This makes it possible for impeller interference or casing rubs to result from shifts in the blower mounting, or from changes in piping support. If this type of trouble is experienced, and the blower is found to be clean, try removing mounting strains. Loosen blower mounting bolts and reset the leveling and drive alignment. Then tighten mounting again, and make sure that all piping meets blower connections accurately and squarely Foreign materials in the blower will also cause trouble, which can only be cured by disconnecting the piping and thoroughly cleaning the blower interior.

A wide range of causes & solutions for operating troubles are covered in the **TROUBLE SHOOTING CHECKLIST**. The remedies suggested should be performed by qualified mechanics with a good background. Major repairs generally are to be considered beyond the scope of maintenance, and should be referred to an authorized ROOTS distributor.

Warranty failures should not be repaired at all, unless specific approval has been obtained through ROOTS before starting work. Unauthorized disassembly within the warranty period may void the warranty.

Figure 2 - Allowable Overhung Loads for VX-Belt Drives Universal RAI®/URAI-J™ Units

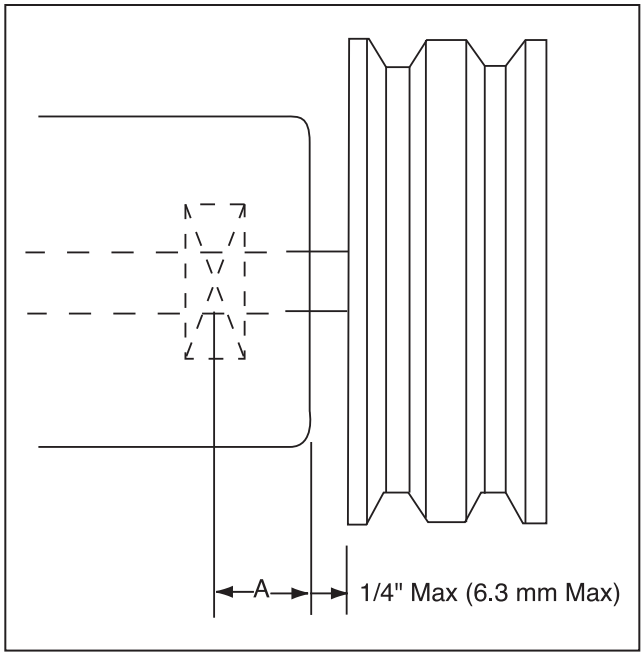

$$\text{Belt Pull in lbs} = \frac{252100 \bullet \text{Motor BHP}}{\text{Blower RPM} \bullet \text{Sheave Diameter in inches}}$$

$$\text{Shaft load (lb.in)} = \text{Belt Pull (lbs)} \bullet \left(A'' + \tfrac{1}{4}'' + \frac{\text{Sheave Width (")}}{2}\right)$$

Frame Size	Dim "A"	Max. Allow. Shaft Load (lb.in)	Min Sheave Diameter	Max. Sheave Width
22, 24	0.61	150	4.00	4
32, 33, 36	0.80	400	5.00	5
42, 45, 47	1.02	730	5.00	5
53, 56, 59	1.13	1,325	6.00	6
65, 68, 615	1.36	2,250	8.00	8
76, 711, 718	1.16	3000	9.50	9.5

NOTE:

Arc of sheave belt contact on the smaller sheave not to be less than 170°

Driver to be installed on the inlet side for vertical units, and on the drive shaft side for horizontal units.

ROOTS recommends the use of two or more 3V, 5V or 8V belts and sheaves.

Acceptable Blower Drive Arrangement Options

Acceptable

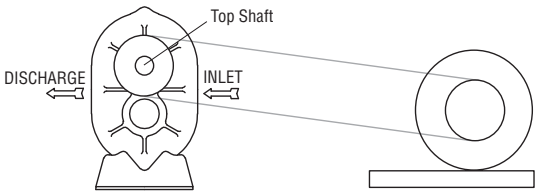

Motor On Inlet Side of Blower (Top Shaft)

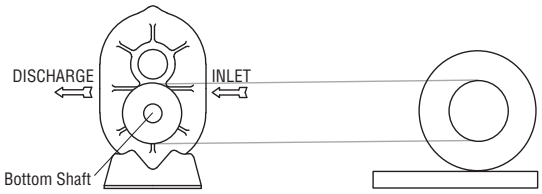

Motor On Inlet Side of Blower (Bottom Shaft)

Unacceptable

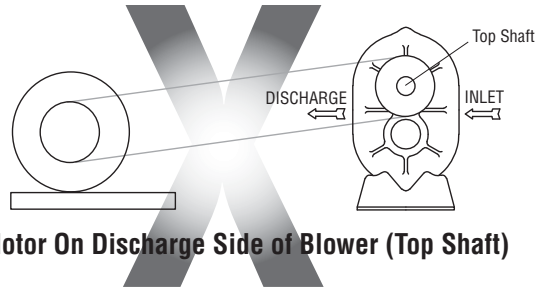

Motor On Discharge Side of Blower (Top Shaft)

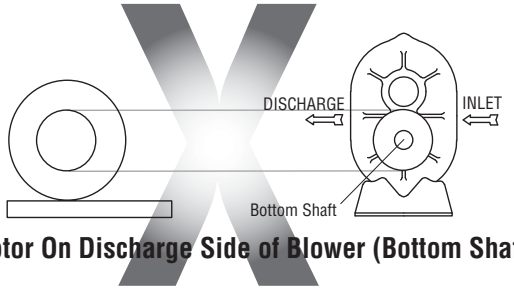

Motor On Discharge Side of Blower (Bottom Shaft)

Above are suggested locations for available accessories.

Figure 3a - Air Blower Installation with Accessories

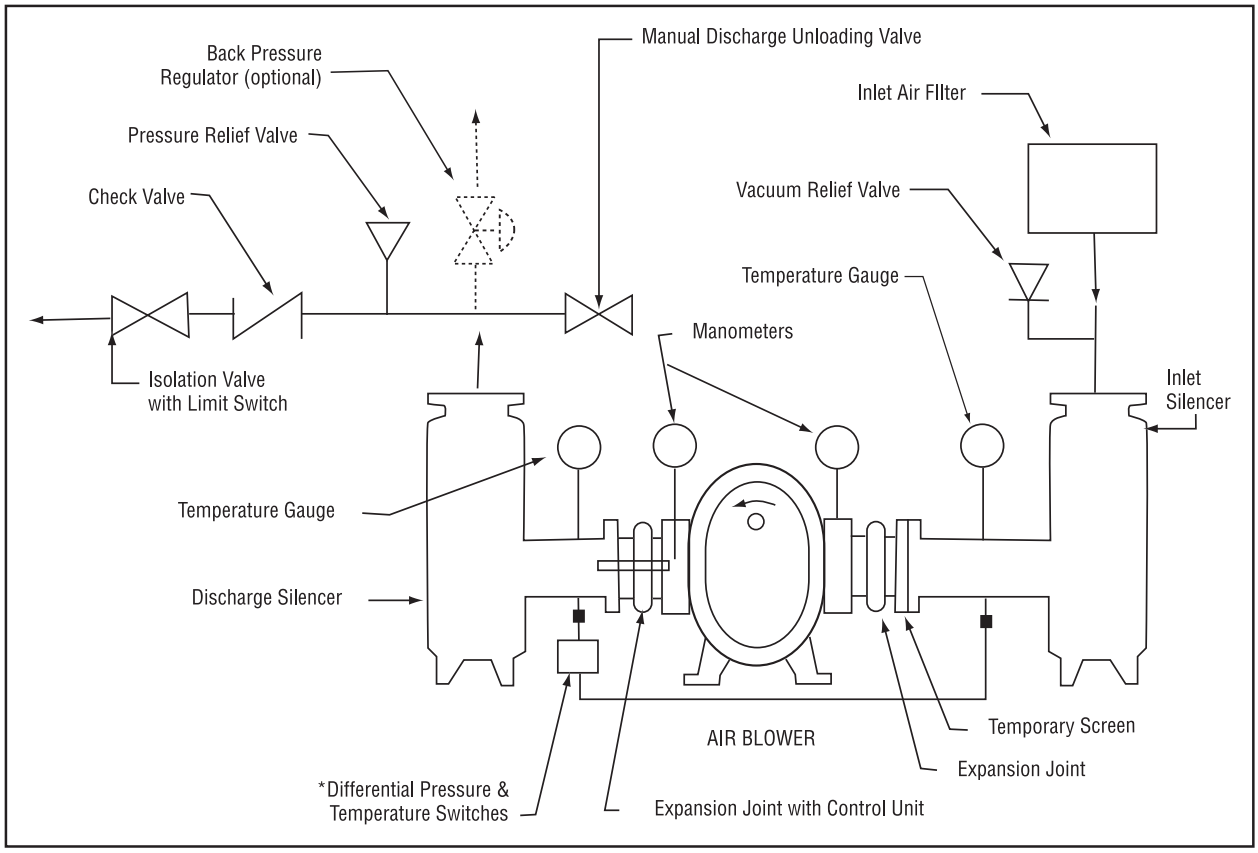

Above are suggested locations for available accessories.

Figure 3b -Gas Blower Installation with Accessories

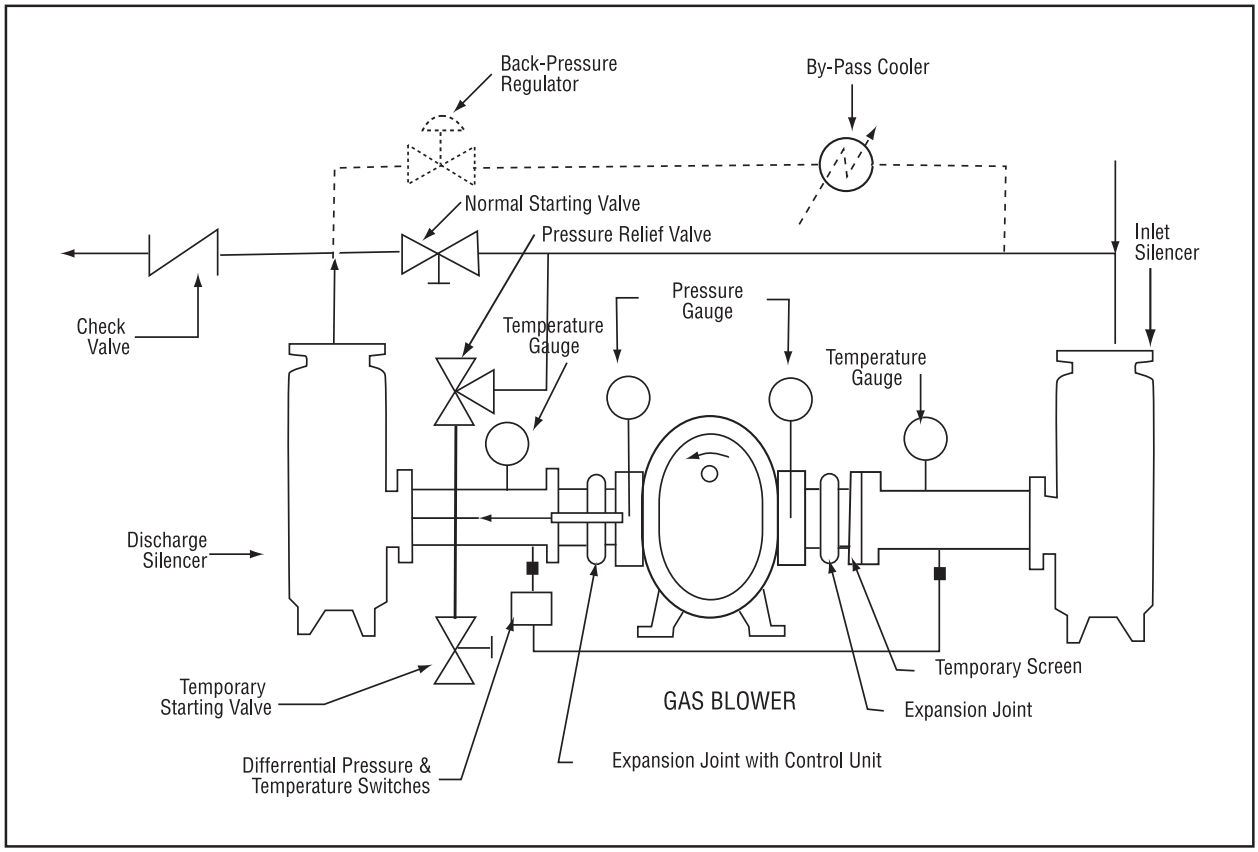

Figure 4 - Blower Orientation Conversion

Model	Reversible Rotation	WHISPAIR™ Design
UNIVERSAL RAI®	Yes	No
URAI-J WHISPAIR®	No	Yes
URAI-G	Yes	No

Special Note: WHISPAIR™ models are designed to operate with only one shaft rotation direction to take full advantage of the WHISPAIR feature. Therefore, a WHISPAIR™ blower may be operated in the following combinations.

- CCW Rotation: Bottom Shaft; Right side discharge or a Left Shaft; Bottom discharge
- CCW Rotation: Top Shaft; Left side discharge or a Right Shaft; Top discharge

or

- CW Rotation: Bottom Shaft; Left side discharge or a Right Shaft Bottom discharge
- CW Rotation: Top Shaft; Right side discharge or a Left Shaft Top discharge

Blower Orientation and Lubrication Points: Grease Lubricated Drive End
Universal RAI series & URAI-G gas blowers

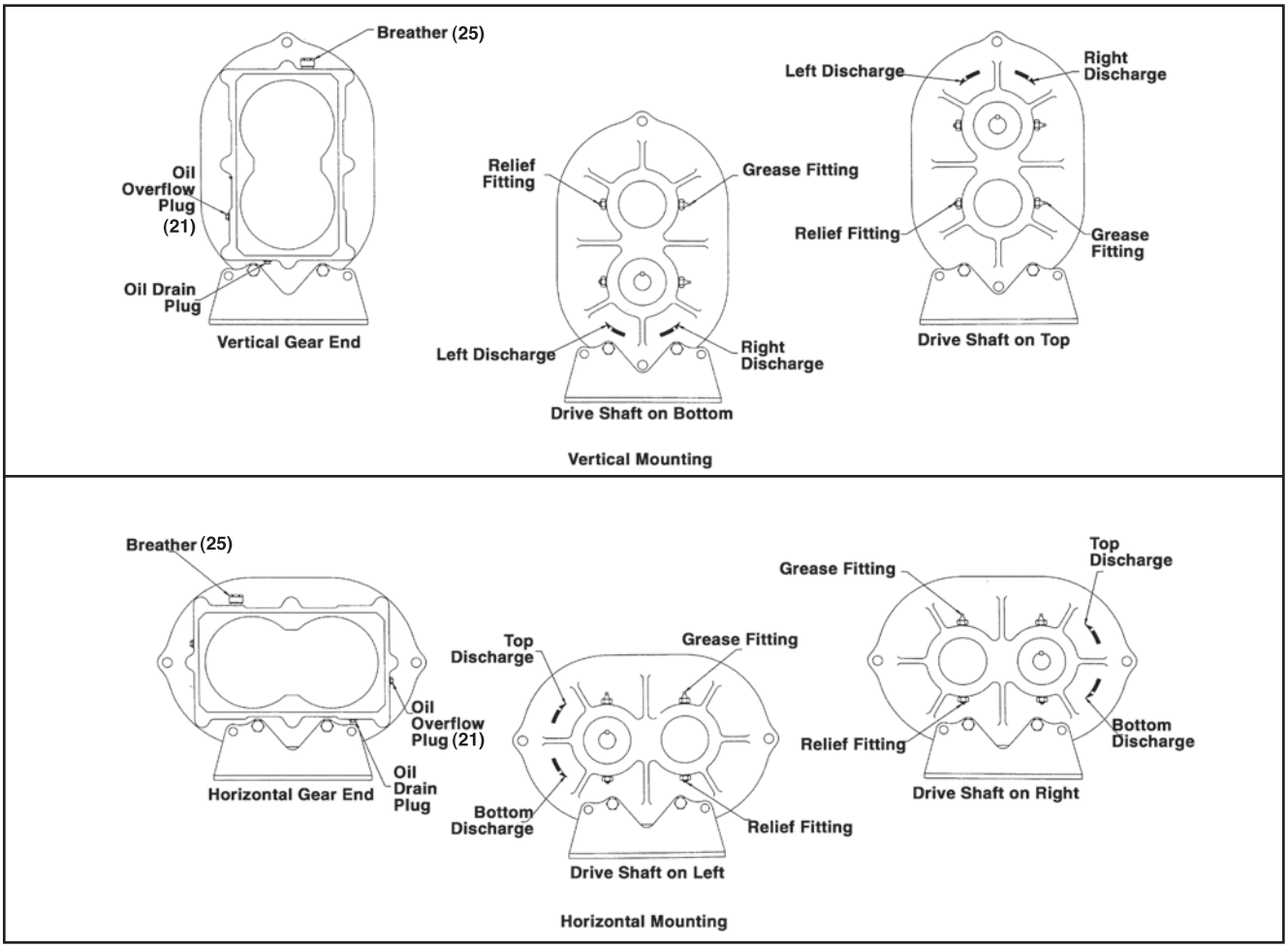

Drive End Breather Orientation for U-RAI series - DSL with Oil Lube

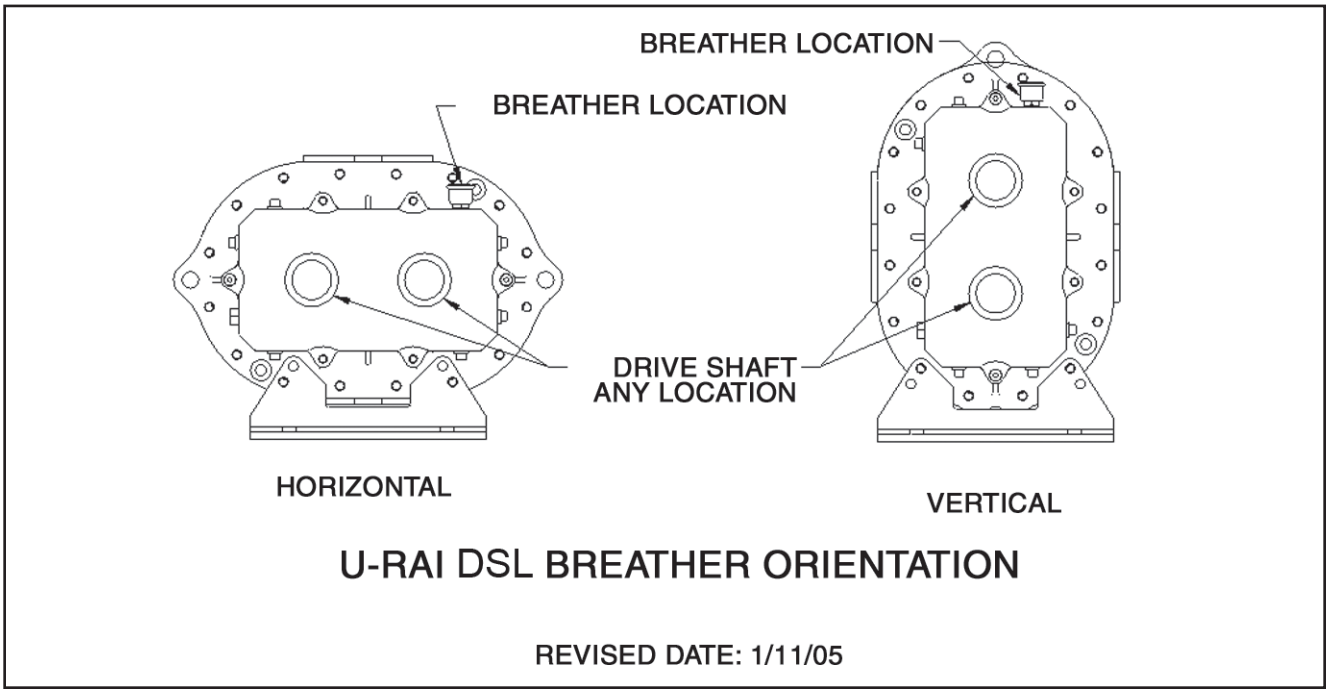

Table 1 - Universal RAI series, Universal URAI-DSL & URAI-G gas blower, Maximum Allowable Operating Conditions

Frame Size	Gear Diameter (inch)	Speed RPM	Temperature Rise		Delta Pressure		Inlet Vacuum	
			F°	C°	PSI	mbar	INHG	mbar
22	2.5	5275	225	125	12	827	15	500
24	2.5	5275	210	117	7	483	15	500
32	3.5	3600	240	133	15	1034	16	539
33	3.5	3,600	225	125	12	827	15	500
36	3.5	3,600	225	125	7	483	15	500
42	4.0	3,600	240	133	15	1034	16	539
45	4.0	3600	225	125	10	690	16	539
47	4.0	3600	225	125	7	483	15	500
53	5.0	2850	225	125	15	1034	16	539
56	5.0	2850	225	125	13	896	16	539
59	5.0	2850	225	125	7	483	15	500
65	6.0	2350	250	130	15	1034	16	539
68	6.0	2350	240	133	14	965	16	539
615	6.0	2350	130	72	7	483	14	472
76	7.0	2050	250	139	15	1034	16	539
711	7.0	2050	225	125	10	690	16	539
718	7.0	2050	130	72	6	414	12	405

Table 2 - Recommended Oil Grades

Ambient* Temperature °F (°C)	ISO Viscosity No.
Above 90° (32°)	320
32° to 90° (0° to 32°)	220
0° to 32° (-18° to 0°)	150
Below 0° (-18°)	100

*Ambient temperature is defined as the temperature of the space in which the blower and drive are located.

URAI GAS Blower Oil and Grease Specifications

The specified oil should be ROOTS® Synthetic Oil P/N 813-106-xxx of the proper viscosity.

Table 3 - Approximate Oil Sump Capacities

These capacities are provided to assist in stocking the correct amount of oil. Exact sump capacities may differ slightly. See "Lubrication" section for proper filling instructions.

UNIVERSAL RAI®, URAI-J, URAI-G

Model No./Drive shaft location	Gear End Approx. Oil Sump Capacities	
	Fl. Oz	Liters
22, 24 (left or right)	6.1	0.18
22, 24 (top or bottom)	3.4	0.1
32, 33, 36 (left or right)	10.5	0.31
32, 33, 36 (top or bottom)	8.5	0.25
42, 45, 47 (left or right)	14.5	0.43
42, 45, 47 (top or bottom)	12.7	0.37
53, 56, 59 (left or right)	27.6	0.82
53, 56, 59 (top or bottom)	16	0.47
65, 68, 615 (left or right)	52.1	1.54
65, 68, 615 (top or bottom)	28.3	0.84
76, 711, 718 (left or right)	59.5	1.76
76, 711, 718 (top or bottom)	32.3	0.96

See page 14 and 15 for illustration of vertical and horizontal configurations.

UNIVERSAL URAI series-DSL Splash Lubricated Drive End

Note that the gear end sump capacity is provided on the adjacent table.

Model No./Drive shaft location	Drive End Capacity	
	Fl. Oz	Liters
32, 33, 36 (left or right)	6.5	0.19
32, 33, 36(top or bottom)	4	0.12
42, 45, 47 (left or right)	10.8	0.32
42, 45, 47 (top or bottom)	5.5	0.16
53, 56, 59 (left or right)	14.8	0.44
53, 56, 59(top or bottom)	7.5	0.22
65, 68, 615 (left or right)	31	0.91
65, 68, 615 (top or bottom)	16	0.47

Table 4 - Universal URAI series with Grease Lubricated Drive End: Specified Bearing Greasing Intervals

Speed in RPM	Operating Hours Per Day		
	8	16	24
	Greasing Interval in Weeks		
750-1000	7	4	2
1000-1500	5	2	1
1500-2000	4	2	1
2000-2500	3	1	1
2500-3000	2	1	1
3000 and up	1	1	1

The specified grease for servicing drive end bearings of a gas blower, use a NLGI #2 premium grade aluminum complex* grease, Roots P/N T20019001 with 300°F (149°C) service temperature and moisture resistance and good mechanical stability.

When servicing drive end bearings of non gas blower, use a NLGI #2 premium grade microgel grease with 250°F (121°C) service temperature and moisture resistance and good mechanical stability. Roots specifies Shell Darina SD2 NLGI#2. Product Code 5067628.

NOTE: Lithium based greases are not compatible with the ROOTS® Synthetic Grease used when assembling a gas blower or the non-soap base grease used when assembling a standard URAI blower. Lithium based grease is not approved for any ROOTS™ blowers.

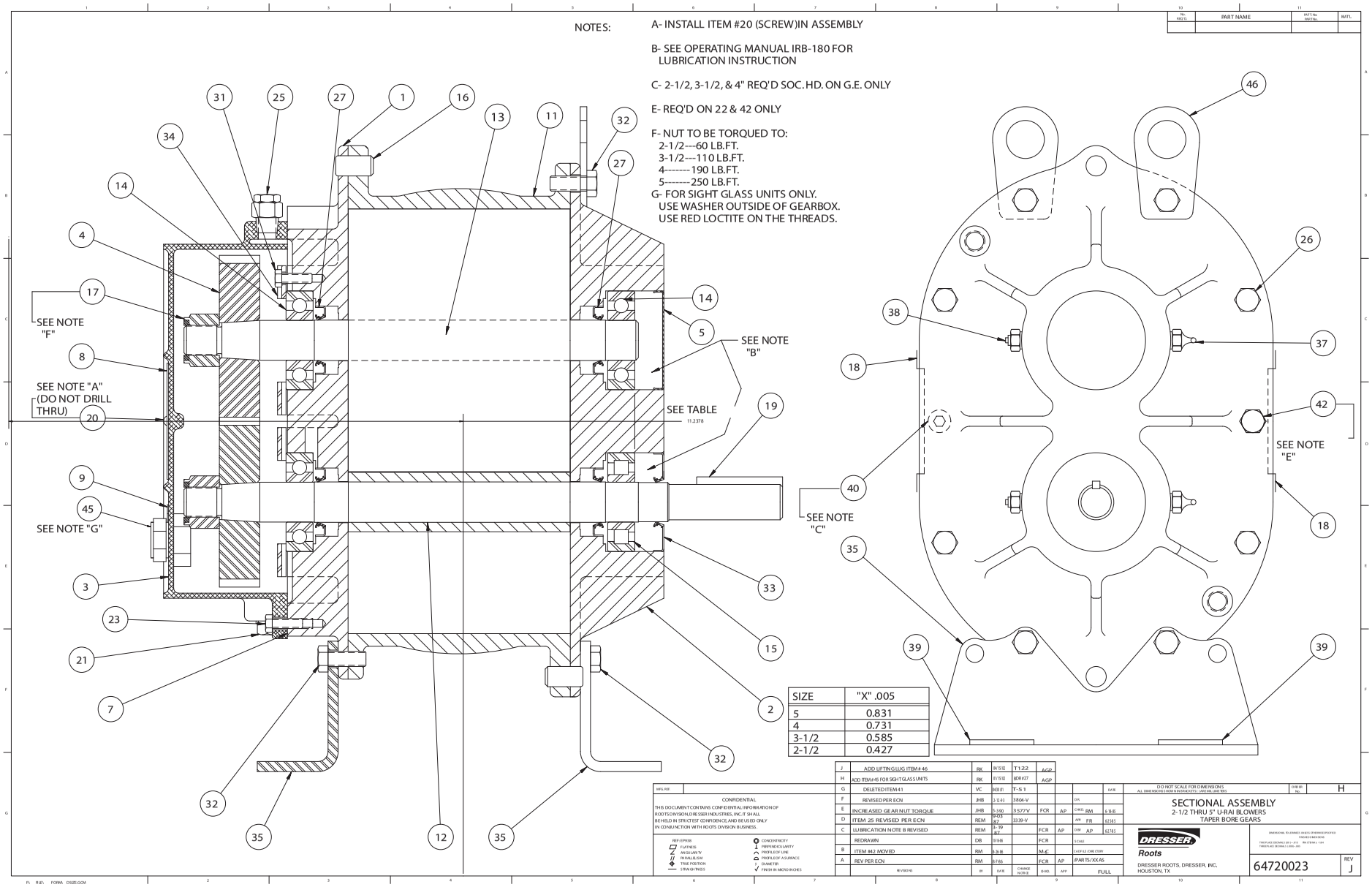

Assembly of UNIVERSAL RAI Series, Air Blowers, 2-1/2" Through 5" Gear Diameter

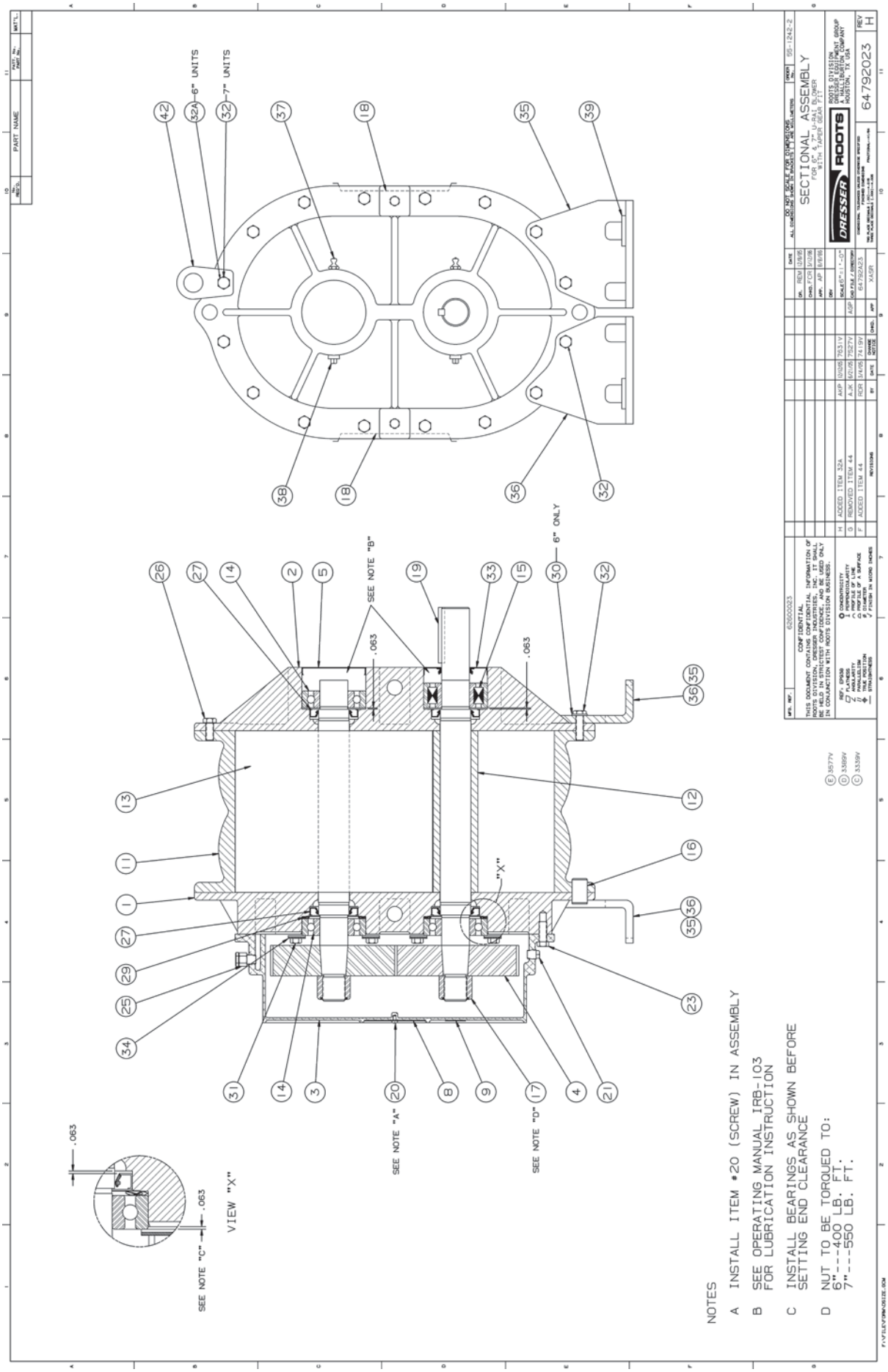

Assembly of UNIVERSAL RAI Blowers, 6" and 7" Diameter

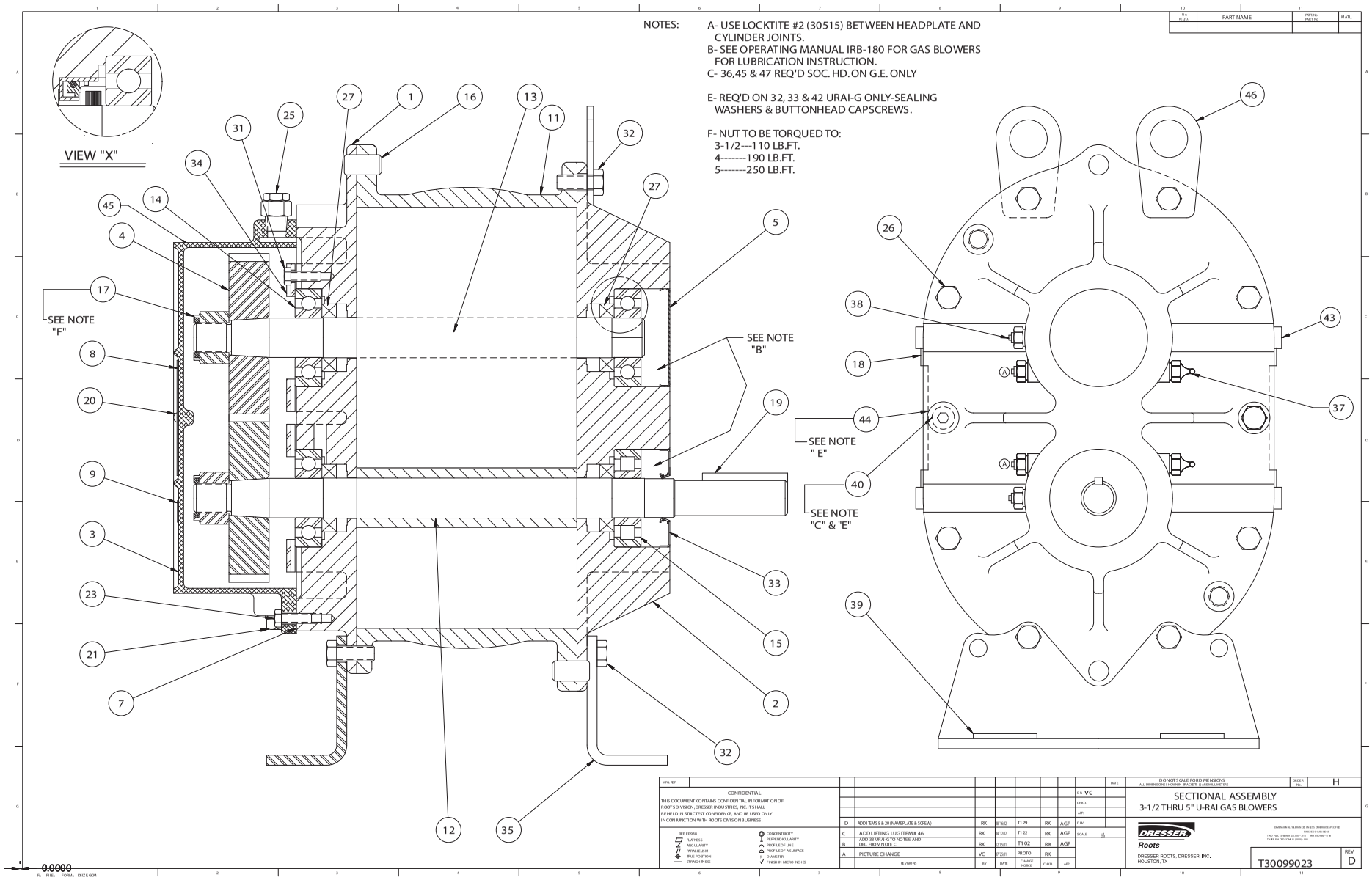

Assembly of UNIVERSAL RAI-G Series Gas Blowers, 3-1/2" through 5" Gear Diameter

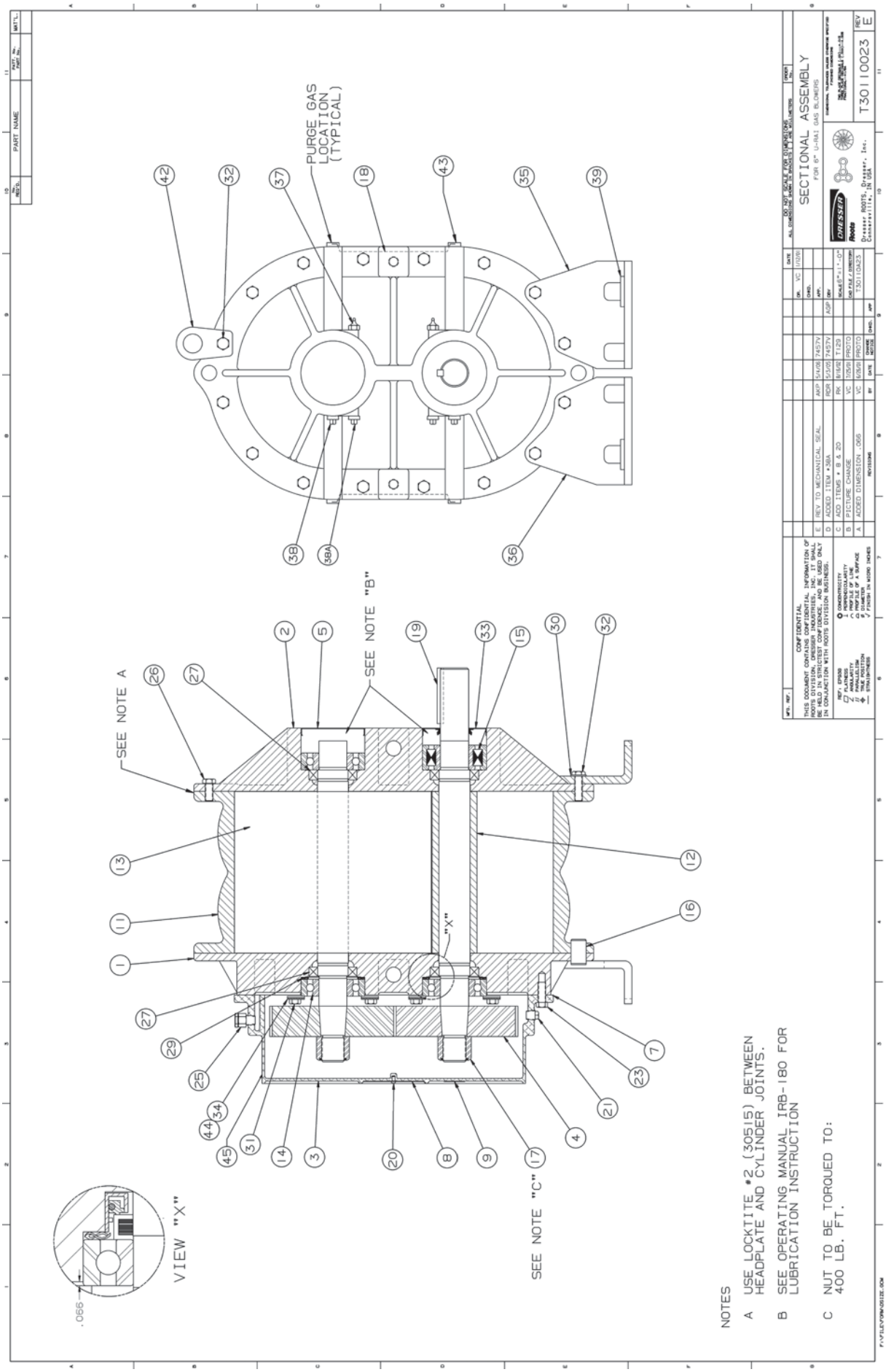

Assembly of UNIVERSAL RAI Series Gas Blowers, 6" Gear Diameter

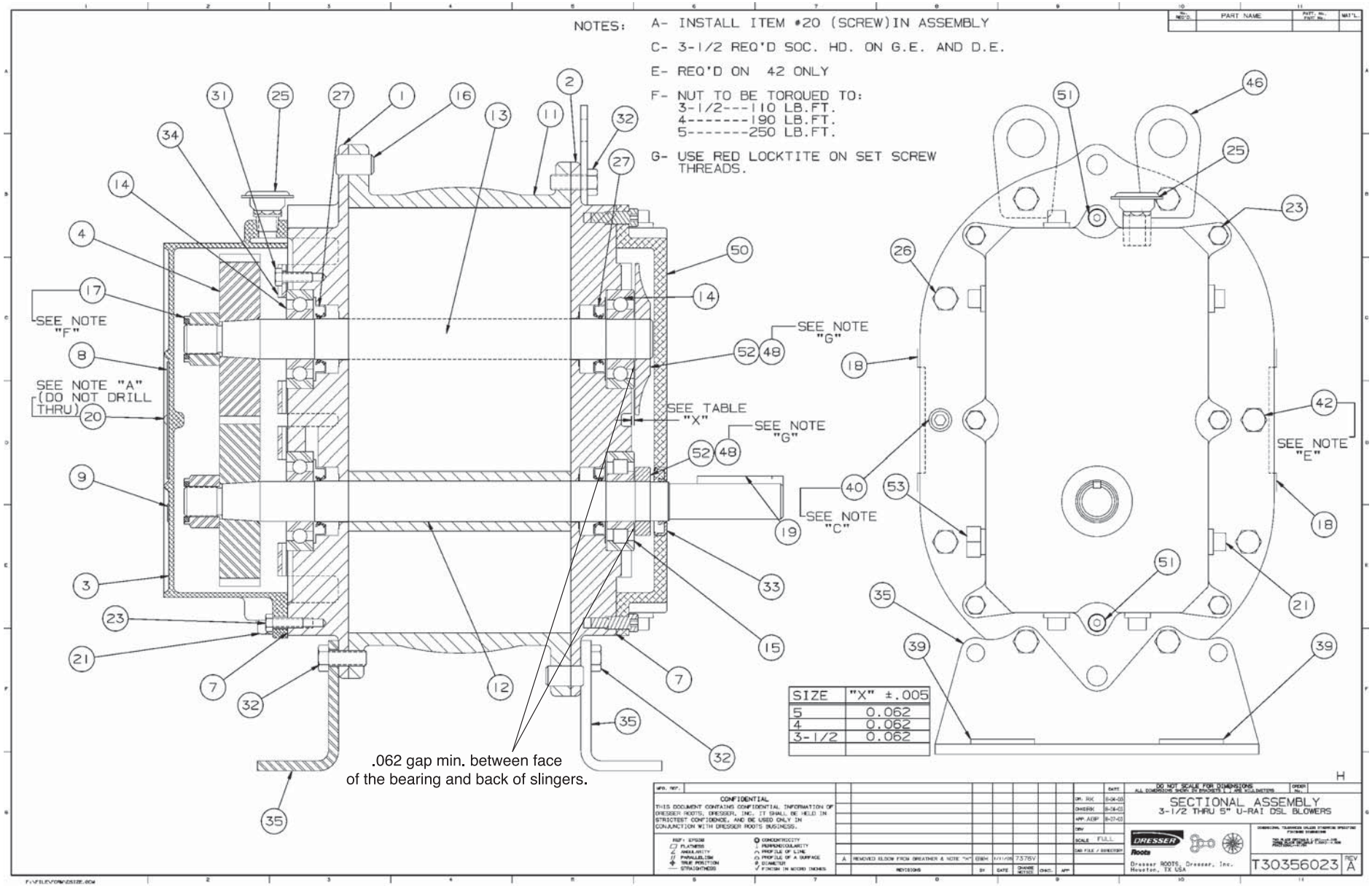

Assembly of UNIVERSAL RAI Series - DSL with Splash Lubricated Drive End 3-5" Gear Diameter

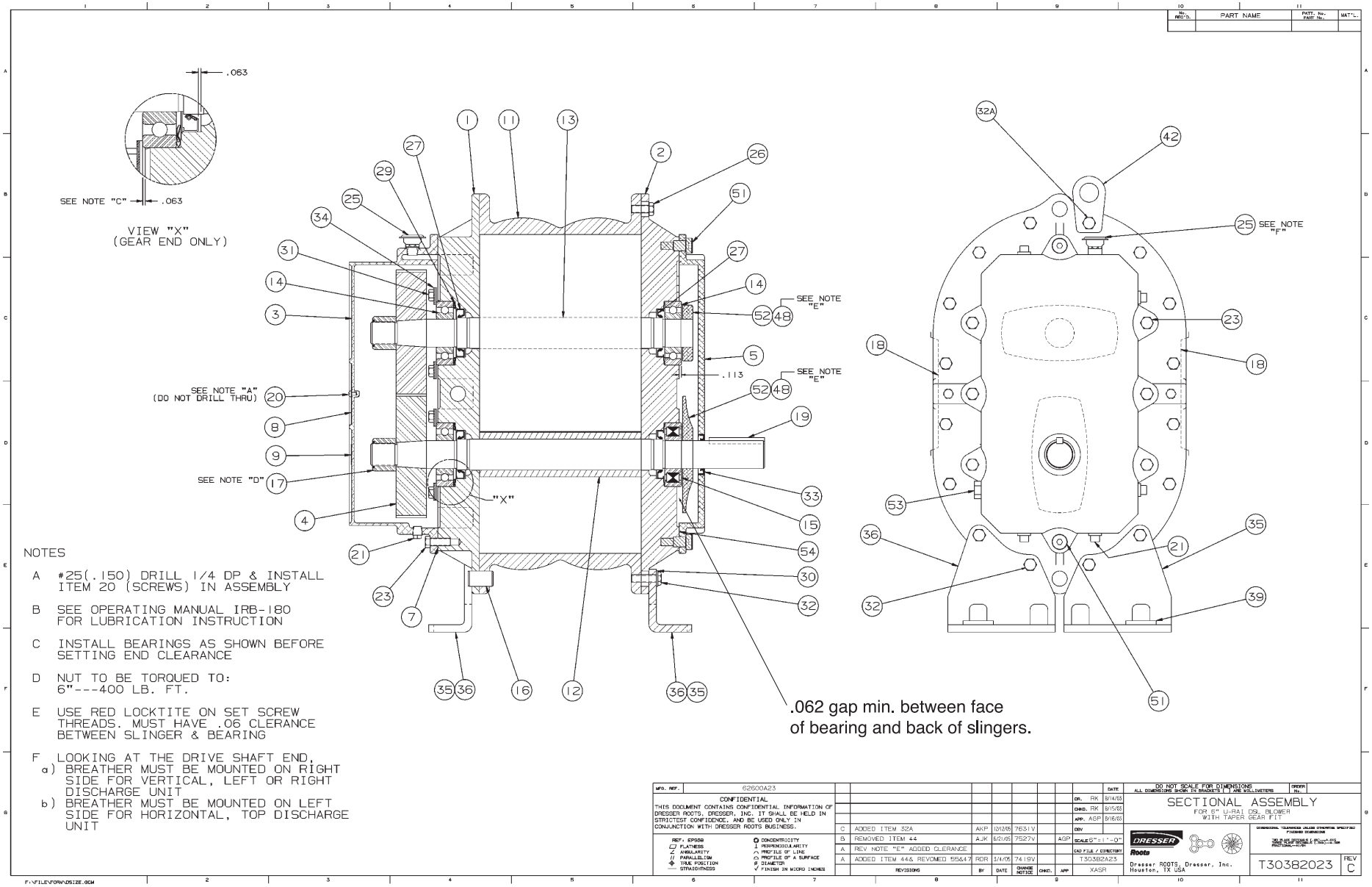

Assembly of UNIVERSAL RAI Series - DSL with Splash Lubricated Drive End 6" Gear Diameter

Universal RAI Series Blowers Parts List 2-1/2" – 5" Gear Diameter

(Refer to drawing #64720023)

Item #	Part Name	Qty.
1	Headplate Gear End	1
2	Headplate Drive End	1
3	Gearbox	1
4	Timing Gears	2
5	Cover-Blind (Plug Opening)	1
7	Gasket, Gear Box	1
11	Cylinder	1
12	Impeller & Shaft Drive	1
13	Impeller & Shaft Driven	1
14	Bearing, Ball	3
15	Bearing, Roller	1
16	Pin, Dowel	4
17	Gear Nut	2
19	Key	1
21	Plug, Pipe	3
23	Screw Hex	6
25	Breather (Plug Vent)	1
26	Screw, Hex	*
27	Seal, Lip Bearing	4
31	Screw, Hex, Nylock	4
32	Screw, Hex	6
33	Seal Lip-Drive	1
34	Clamp Plate	2
35	Foot	2
37	Fitting, Grease	2
38	Fitting, Relief	2
39	Washer Mounting	4
40	Screw Socket	2
42	Screw Hex	2

*Quantities vary by blower.

Universal RAI Series Blowers Parts List 6" & 7" Gear Diameter

(Refer to drawing #64792023)

Item #	Part Name	Qty.
1	Headplate Gear End	1
2	Headplate Drive End	1
3	Gearbox	1
4	Timing Gears	2
5	Cover-Blind (Plug Opening)	1
7	Gasket, Gear Box	1
11	Cylinder	1
12	Impeller & Shaft Drive	1
13	Impeller & Shaft Driven	1
14	Bearing, Ball	3
15	Bearing, Roller	1
16	Pin, Dowel	4
17	Gear Nut	2
19	Key	1
21	Plug, Pipe	3
23	Screw Hex Nylock	8
25	Breather (Plug Vent)	1
26	Screw, Hex	*
27	Seal, Lip Bearing	4
29	Washer, Spring Wavy	2
31	Screw, Hex, Nylock	4
32	Screw, Hex	10
33	Seal Lip-Drive	1
34	Clamp Plate	2
35	Foot	2
37	Fitting, Grease	2
38	Fitting, Relief	2
39	Washer Mounting	4

*Quantities vary by blower.

Universal RAI-DSL Series Blowers Parts List 3-1/2" – 5" Gear Diameter

(Refer to drawing #T30356023)

Item #	Part Name	Qty.
1	Headplate Gear End	1
2	Headplate Drive End	1
3	Gearbox	1
4	Timing Gears	2
7	Gasket, Gear Box, DE Cover	1
11	Cylinder	1
12	Impeller & Shaft Drive	1
13	Impeller & Shaft Driven	1
14	Bearing, Ball	3
15	Bearing, Roller	1
16	Pin, Dowel	4
17	Gear Nut	2
19	Key	1
21	Plug, Pipe	3
23	Screw Hex	6
25	Breather (Plug Vent)	1
26	Screw, Hex	*
27	Seal, Lip Bearing	4
31	Screw, Hex, Nylock	4
32	Screw, Hex	6
33	Seal Lip-Drive	1
34	Clamp Plate	2
35	Foot	2
39	Washer Mounting	4
40	Screw Socket	2
42	Screw Hex	2
48	DE Oil Slinger Set Screw	4
50	Drive End Cover	1
52	Drive End Oil Slinger	2
53	Oil Sight Glass	2

*Quantities vary by blower.

Universal RAI®-DSL Series Blowers Parts List 6" Gear Diameter

(Refer to drawing #T30382023)

Item #	Part Name	Qty.
1	Headplate Gear End	1
2	Headplate Drive End	1
3	Gearbox	1
4	Timing Gears	2
7	Gasket, Gear Box	1
11	Cylinder	1
12	Impeller & Shaft Drive	1
13	Impeller & Shaft Driven	1
14	Bearing, Ball	3
15	Bearing, Roller	1
16	Pin, Dowel	4
17	Gear Nut	2
19	Key	1
21	Plug, Pipe	3

Item #	Part Name	Qty.
23	Screw Hex Nylock	8
25	Breather (Plug Vent)	1
26	Screw, Hex	*
27	Seal, Lip Bearing	4
31	Screw, Hex, Nylock	4
32	Screw, Hex	10
33	Seal Lip-Drive	1
34	Clamp Plate	2
35	Foot	2
39	Washer Mounting	4
48	DE Oil Slinger Set Screw	4
50	Drive End Cover	1
52	Drive End Oil Slinger	2
53	Oil Sight Glass	2

*Quantities vary by blower.

Universal RAI Series Gas Blowers Parts List
3-1/2" & 5" Gear Diameter

(Refer to drawing #T30099023)

Item Number	Part Name	Quantity
1	Headplate Gear End	1
2	Headplate Drive End	1
3	Gearbox	1
4	Timing Gears	2
5	Cover-Blind (Plug Opening)	1
7	Gasket, Gear Box	1
11	Cylinder	1
12	Impeller & Shaft Drive	1
13	Impeller & Shaft Driven	1
14	Bearing, Ball	3
15	Bearing, Roller	1
16	Pin, Dowel	4
17	Gear Nut	2
19	Key	1
21	Plug, Pipe	3
23	Screw Hex	8
25	Breather (Plug Vent)	1
26	Screw, Hex	14*
27	Seal, Bearing	4
31	Screw, Hex	4
32	Screw, Hex	4
33	Seal Lip-Drive	1
34	Clamp Plate	2
35	Foot	2
37	Fitting, Grease	2
38	Fitting, Relief	2
39	Washer Mounting	4
40	Screw Socket	2
42	Screw Hex	2

*Quantity varies by blower.

Specified Lubricants

ROOTS® Synthetic Oil: ISO-VG-220 Grade	
	Part Number
Quart	813-106-001
Gallon	813-106-002
Case (12 qts)	813-106-008
ROOTS® Synthetic Oil: ISO-VG-320 Grade	
	Part Number
Quart	813-106-004
Gallon	813-106-005
Case (12 qts)	813-106-007
ROOTS® Synthetic Grease: NLGI #2	
	Part Number
14.5 oz. Tube	T200019-001
5 Gallon Pail	T200019-003
Case (30 tubes)	T200019-002

Universal RAI Series Gas Blowers Parts List
6" Gear Diameter

(Refer to drawing #T3011023)

Item Number	Part Name	Quantity
1	Headplate Gear End	1
2	Headplate Drive End	1
3	Gearbox	1
4	Timing Gears	2
5	Cover-Blind (Plug Opening)	1
7	Gasket, Gear Box	1
7*	Gasket DE Cover	1
11	Cylinder	1
12	Impeller & Shaft Drive	1
13	Impeller & Shaft Driven	1
14	Bearing, Ball	3
15	Bearing, Roller	1
16	Pin, Dowel	4
17	Gear Nut	2
19	Key	1
21	Plug, Pipe	3
23	Screw Hex Nylock	8
25	Breather (Plug Vent)	1
26	Screw, Hex	14**
27	Seal, Bearing	4
31	Screw, Hex	4
32	Screw, Hex	10
33	Seal Lip-Drive	1
34	Clamp Plate	2
35	Foot	2
37	Fitting, Grease	2
38	Fitting, Relief	2
39	Washer Mounting	4
40	Screw Socket	2
42	Screw Hex	2
43	Plug	8
51	Shoulder Bolt	2
53	Oil Sight Glass	2

*DE cover gasket is not the same as the gasket used on the GE. You must specify the gasket required when ordering.

**Quantities vary by blower.

Basic Connection & Drive Shaft Information
UNIVERSAL RAI (URAI) Air Blowers with Grease Lubricated Drive End

BOM#*	Frame Size	Inlet/Disch Connection	Shaft Diameter (in.)	Bare Weight
65102020	22	1" NPT	0.625	32
65103020	24	2" NPT	0.625	43
71048020	32	1.25" NPT	0.750	69
65105020	33	2" NPT	0.750	74
65106020	36	2.5" NPT	0.750	102
65108020	42	1.5" NPT	0.875	88
65109020	45	2.5" NPT	0.875	109
65110020	47	3" NPT	0.875	128
65112020	53	2.5” NPT	1.125	143
65113020	56	4" NPT	1.125	170
65114020	59	4” NPT	1.125	204
65116020	65	3" NPT	1.375	245
65117020	68	5" NPT	1.375	285
65118020	615	6" Flange	1.375	425
65120020	76	4" NPT	1.562	400
65121020	711	6" Flange	1.562	530
65122020	718	8" Flange	1.562	650

Refer to Specification Sheet S-12K84

URAI DSL Air Blowers with Dual Splash Lubrication

BOM#*	Frame Size	Inlet/Disch Connection	Shaft Diameter (in.)	Bare Weight
T30378020	32	1.25" NPT	0.750	72
T30379020	33	2" NPT	0.750	77
T30380020	36	2.5" NPT	0.750	105
T30352020	42	1.5" NPT	0.875	92
T30353020	45	2.5" NPT	0.875	113
T30354020	47	3" NPT	0.875	132
T30359020	53	2.5" NPT	1.125	148
T30360020	56	4" NPT	1.125	175
T30361020	59	4” NPT	1.125	209
T30384020	65	3" NPT	1.375	250
T30385020	68	5” NPT	1.375	290
T30386020	615	6" Flange	1.375	430

Refer to Specification Sheet S-27S03

Universal RAI air blowers include detachable mounting feet which permit vertical or horizontal installation. The units are center timed for rotation in either direction. The bearings on the URAI are grease lubricated on the drive end and splash lubricated on the gear end. The URAI-DSL is splash lubricated on BOTH ends.

Universal RAI-G Gas Blowers with Grease Lubricated Drive End

BOM#*	Frame Size	Inlet/Disch Connection	Shaft Diameter (in.)	Bare Weight
710480G0	32	1.25" NPT	0.750	69
651050G0	33	2" NPT	0.750	74
651060G0	36	2.5" NPT	0.750	102
651080G0	42	1.5" NPT	0.875	88
651090G0	45	2.5" NPT	0.875	109
651100G0	47	3" NPT	0.875	128
651120G0	53	2.5" NPT	1.125	143
651130G0	56	4" NPT	1.125	170
651140G0	59	4” NPT	1.125	204
651160G0	65	3" NPT	1.375	245
651170G0	68	5” NPT	1.375	285
651180G0	615	6" NPT	1.375	425

Refer to Specification Sheet S-60A01

Universal RAI-G™ gas blowers include detachable mounting feet which permit vertical or horizontal installation. **Feet are different for vertical and horizontal mounting.** The units are center timed for rotation in either direction. The bearings on the Universal RAI-G are grease lubricated on the drive end and splash lubricated on the gear end. ROOTS® Synthetic Lubricant is recommended.

Basic Connections and Drive Shaft Information

Universal RAI (URAI-J) WHISPAIR™ Air Blowers

Universal RAI-J WHISPAIR™ Air Blowers with Grease Lubricated Drive End

BOM#*	Frame Size	Inlet/Disch Connection	Shaft Diameter (in.)	Bare Weight
74065020	33J	2" NPT	0.750	84
74086020	36J	2.5" NPT	0.750	112
74066020	45J	2.5" NPT	0.875	119
74087020	47J	3" NPT	0.875	138
74067020	56J	4" NPT	1.125	180

Refer to Specification Sheet S-33A93

URAI-J-DSL WHISPAIR™ Air Blowers with Dual Splash Lubrication

BOM#*	Frame Size	Inlet/Disch Connection	Shaft Diameter (in.)	Bare Weight
T30417020	33J	2" NPT	0.750	87
T30418020	36J	2.5" NPT	0.750	115
T30410020	45J	2.5" NPT	0.875	122
T30412020	47J	3" NPT	0.875	141
T30415020	56J	4" NPT	1.125	185

Refer to Specification Sheet S-33A93

URAI-J Metric WHISPAIR™ Air Blowers with Grease Lubricated Drive End

BOM#*	Frame Size	Inlet/Disch Connection	Shaft Diameter (mm)	Bare Weight
TBD	33J	2" BSP	19	84
740860M0	36J	2.5" BSP	19	112
TBD	45J	2.5" BSP	24	119
TBD	47J	3" BSP	24	138
TBD	56J	4" BSP	28	180

URAI-J-DSL Metric WHISPAIR™ Air Blowers with Dual Splash Lubrication

BOM#*	Frame Size	Inlet/Disch Connection	Shaft Diameter (mm)	Bare Weight
TBD	33J	2" BSP	19	87
T304660M0	36J	2.5" BSP	19	115
TBD	45J	2.5" BSP	24	122
T304550M0	47J	3" BSP	24	141
TBD	56J	4" BSP	28	185

Universal RAI-J air blowers incorporate the patented WHISPAIR™ design in addition to the same features as the original URAI blowers. The URAI-J's are centered timed, however the WHISPAIR™ benefits can only be realized when the jet is located in the discharge position.

Universal RAI Metric (URAI-M) Air Blowers with Grease Lubricated Drive End

NOTE: Metric URAI product has metric shaft diameter and connection sizes.

BOM#*	Frame Size	Inlet/Disch Connection	Shaft Diameter (mm)	Bare Weight
651020M0	22	1" BSP	16	32
651030M0	24	2" BSP	16	43
710480M0	32	1.25" BSP	19	69
651050M0	33	2" BSP	19	74
651060M0	36	2.5" BSP	19	102
651080M0	42	1.5" BSP	24	88
651090M0	45	2.5" BSP	24	109
651100M0	47	3" BSP	24	128
651120M0	53	2.5” BSP	28	143
651130M0	56	4" BSP	28	170
651140M0	59	4” BSP	28	204
T30392060	65	3" BSP	32	245
T30394060	68	5" BSP	32	285
T30390060	615	150 NP10	32	425
T30396060	76	4" BSP	38	400
T30398060	711	150 NP10	38	530
T30340060	718	200 NP10	38	650

URAI-DSL Metric Air Blowers with Dual Splash Lubrication

BOM#*	Frame Size	Inlet/Disch Connection	Shaft Diameter (mm)	Bare Weight
T30463060	32	1.25" BSP	19	72
T30464060	33	2" BSP	19	77
T30465060	36	2.5" BSP	19	105
T30451060	42	1.5" BSP	24	92
T30452060	45	2.5" BSP	24	113
T30453060	47	3" BSP	24	132
T30459060	53	2.5" BSP	28	148
T30460060	56	4" BSP	28	175
T30461060	59	4” BSP	28	209
T30467260	65	3" BSP	32	250
T30467360	68	5” BSP	32	290
T30467460	615	150 NP 10	32	430

Universal RAI air blowers include detachable mounting feet which permit vertical or horizontal installation. The units are center timed for rotation in either direction. The bearings on the URAI are grease lubricated on the drive end and splash lubricated on the gear end. The URAI-DSL is splash lubricated on BOTH ends.

ROOTS™ Blowers and Compressors Synthetic Lubricating Oil

After extensive life testing on rotary lobe blowers, Dresser ROOTS™ introduced a special blend, high-temperature, (polyalphaolefin based) synthetic lubricating oil for ROOTS™ blowers in 1990.

Today's ROOTS™ blowers and exhausters are designed and built with the same attention to detail that has firmly established the Dresser Roots reputation for reliability, quality and technical excellence over the past 150 years.

ROOTS™ synthetic lubricating oils are made with the same quality and technical excellence standards to meet the highest specifications required for maximum performance.

LUBRICANT ADVANTAGES:

- **High Oxidation Stability** - Contains oxidation-resistant additives that mean longer oil life and fewer oil changes. ROOTS™ Synthetic Lubricating oil excels in ASTM oxidation tests, and in the field, where it counts. Longer oil life means lower expenditures, and greater conservation.
- **Rapid Separation from Water** - Promotes prolonged bearing life.
- **Excellent Corrosion Protection** - Contains synthetic corrosion inhibitors. Protects during operation and acts as a preservative during shut down.
- **Synthetic Solvency** - Keeps equipment clean.
- **Ashless** - Keeps equipment free from metallic ash deposits.
- **Compatible with Seals** - Has excellent compatibility with seals.
- **Blower Protection** - Protects blower through a wide range of operating temperatures.
- **Pour Point** - from -40°F (-40°C). **Flash Point** - at 500°F (260°C).
- **Range of Use** - ROOTS™ Synthetic Lubricating Oil can be used in any blower application or operating environment.
- **High Film Strength** - ROOTS™ Synthetic Lubricating Oil carries up to 700% greater loads than other mineral and synthetic oils.
- **Low Friction** - Extremely low coefficient of friction proven to save energy over conventional oils.
- **Compatibility With Other Oils** - ROOTS™ Synthetic Lubricating Oil is compatible with, and can be mixed with, other mineral oils and most other synthetic oils. No special cleaning is required at change out for blowers previously running on mineral oil. NOTE: It is NOT compatible with silicone or glycol synthetics.
- **ISO Grade Availability** - Available in ISO Grade 100, 150, 220, or 320.
- **Container Sizes** - Available in one-quart containers, 12-quart cases, one-gallon containers, 5-gallon pails, or 55 gallon drums.

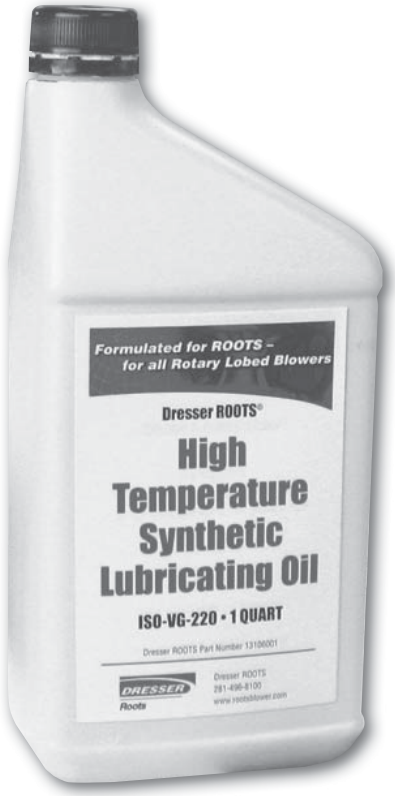

About Dresser Roots®

Dresser Roots, a major product brand of Dresser, Inc., is the manufacturer of the original ROOTS blower™, centrifugal compressors and control systems. ROOTS® air and gas moving equipment is used in a wide variety of applications, including Mechanical Vapor Recompression, water and wastewater treatment, flue gas desulphurization, petrochemical and chemical processes, conveying, and other industrial applications.

About Dresser, Inc.

Dresser, Inc. is a leader in providing highly engineered infrastructure products for the global energy industry. The company has leading positions in a broad portfolio of products, including valves, actuators, meters, switches, regulators, piping products, natural gas-fueled engines, retail fuel dispensers and associated retail point-of-sale systems, and air and gas handling equipment. Leading brand names within the Dresser portfolio include Dresser Wayne® retail fueling systems, Waukesha® natural gas-fired engines, Masoneilan® control valves, Consolidated® pressure relief valves, and Roots® blowers. It has manufacturing and customer service facilities located strategically worldwide and a sales presence in more than 100 countries.

Dresser Roots
Houston, Texas Headquarters • U.S. Toll Free Phone: 1 877-363-ROOT(S) (7668) • Direct Phone: +1 832-590-2600
Connersville, Indiana Operations • U.S. Toll Free Phone: 1 877-442-7910 • Direct Phone: +1 765-827-9285
European Operations • Phone: +44 (0) 1695 52600 • Email: roots.europe@dresser.com
USA/Canada Sales • Phone: +1 773-444-3360
Houston, Texas Factory Service • Phone: +1 713-896-4810
Mexico City Sales and Factory Service • Phone: +52 55 5889 5811
Dubai Sales and Factory Service • Phone: +971 4-8855481
Malaysia Sales • Phone: +60 3 2267 2600
China Sales • Phone: +86 10 8486 2440
Shanghai Factory Service • Phone: +86 21 5858 7638

©2010 Dresser, Inc. All rights reserved. • Printed in the U.S.A. • All information subject to change without notice. • Roots, Wayne, Waukesha, Masoneilan and Consolidated are registered trademarks of Dresser, Inc. • ROOTS, WHISPAIR, UNIVERSAL RAI, UNIVERSAL RAI-J and UNIVERSAL RAI-G are trademarks of Dresser, Inc.

DRESSER Roots

ISRB-2002 rev. 0710

www.dresserroots.com/

CERTIFICATION DATA SHEET

Model#:	324TTFC6027 AA	**WINDING#:**	T16104005 NONE 3
CONN. DIAGRAM:	4172.03	**ASSEMBLY:**	F1/F2 CAPABLE
OUTLINE:	169541.60ME		

TYPICAL MOTOR PERFORMANCE DATA

HP	KW	SYNC. RPM	F.L. RPM	FRAME	ENCLOSURE	KVA CODE	DESIGN
40&30	30&22.4	1800	1780&1481	324T	TEFC	G	B

PH	Hz	VOLTS	FL AMPS	START TYPE	DUTY	INSL	S.F	AMB	ELEVATION
3	60/50	208-230/460#190/380	99-92/46&84/42	ACROSS THE LINE	CONTINUOUS	F2	1.15/1.15	40	3300

FULL LOAD EFF: 94.1&93.6	3/4 LOAD EFF: 95	1/2 LOAD EFF: 95	GTD. EFF	ELEC. TYPE	NO LOAD AMPS
FULL LOAD PF: 86&86.5	**3/4 LOAD PF: 82**	**1/2 LOAD PF: 74.5**	93	SQ CAGE IND RUN	35 / 17.5

F.L. TORQUE	LOCKED ROTOR AMPS	L.R. TORQUE	B.D. TORQUE	F.L. RISE
119 LB-FT	580 / 290	225 LB-FT 189	350 LB-FT 294	65

SOUND PRESSURE @ 3 FT.	SOUND POWER	ROTOR WK^2	MAX. WK^2	SAFE STALL TIME	STARTS /HOUR	APPROX. MOTOR WGT
- dBA	- dBA	6.32 LB-FT^2	- LB-FT^2	20 SEC.	-	538 LBS.

*** SUPPLEMENTAL INFORMATION ***

DE BRACKET TYPE	ODE BRACKET TYPE	MOUNT TYPE	ORIENTATION	SEVERE DUTY	HAZARDOUS LOCATION	DRIP COVER	SCREENS	PAINT
STANDARD	STANDARD	RIGID	HORIZONTAL	FALSE	NONE	FALSE	NONE	STANDARD

BEARINGS		GREASE	SHAFT TYPE	SPECIAL DE	SPECIAL ODE	SHAFT MATERIAL	FRAME MATERIAL
DE	OPE						
BALL	BALL	STANDARD	T	NONE	NONE	STANDARD	CAST IRON
6312	6312						

THERMO-PROTECTORS				THERMISTORS	CONTROL	SPACE /n HEATERS
THERMOSTATS	PROTECTORS	WDG RTDs	BRG RTDs			
NONE	NOT	NONE	NONE	NONE	FALSE	NONE VOLTS

*
N
O
T
E
S
*

INVERTER TORQUE: NONE
INV. HP SPEED RANGE: NONE

ENCODER: NONE
NONE NONE
NONE NONE PPR

BRAKE: NONE NONE
NONE P/N NONE
NONE NONE
- FT-LB NONE V NONE Hz

DATE: 07/05/2011 12:17:57 PM
FORM 3531 REV.3 02/07/99
** Subject to change without notice.

169541–60ME

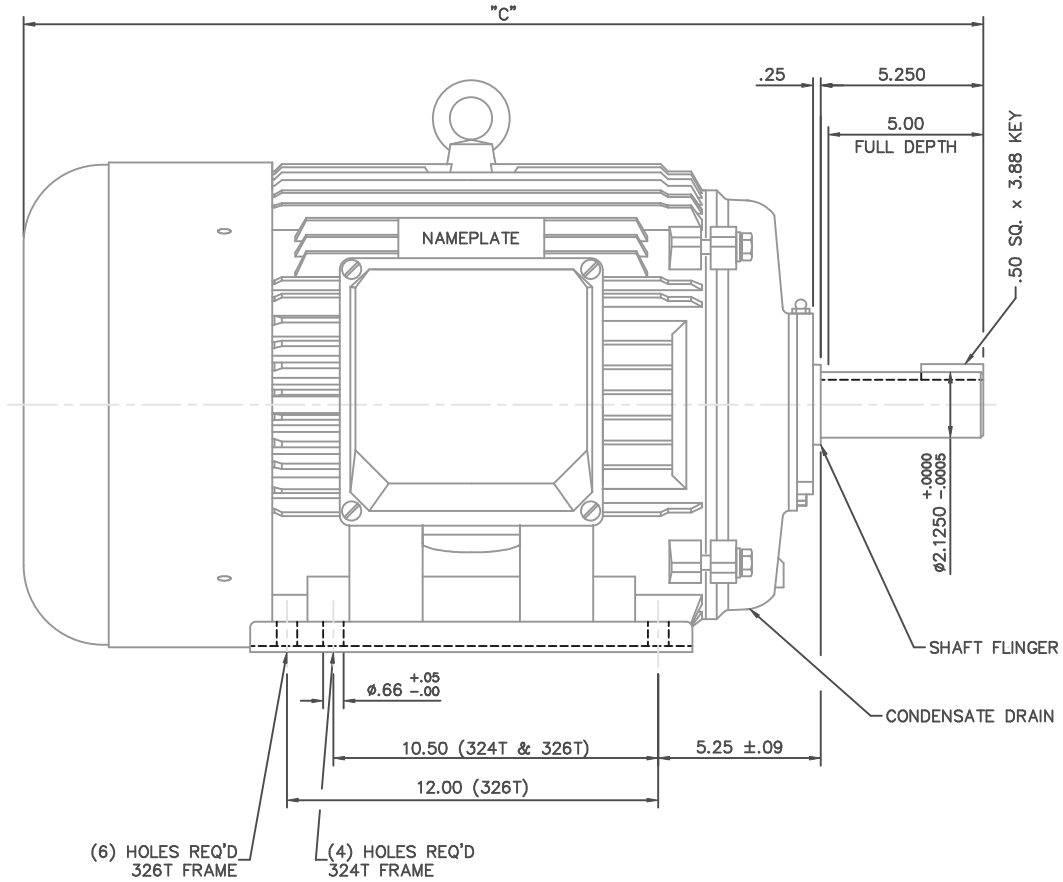

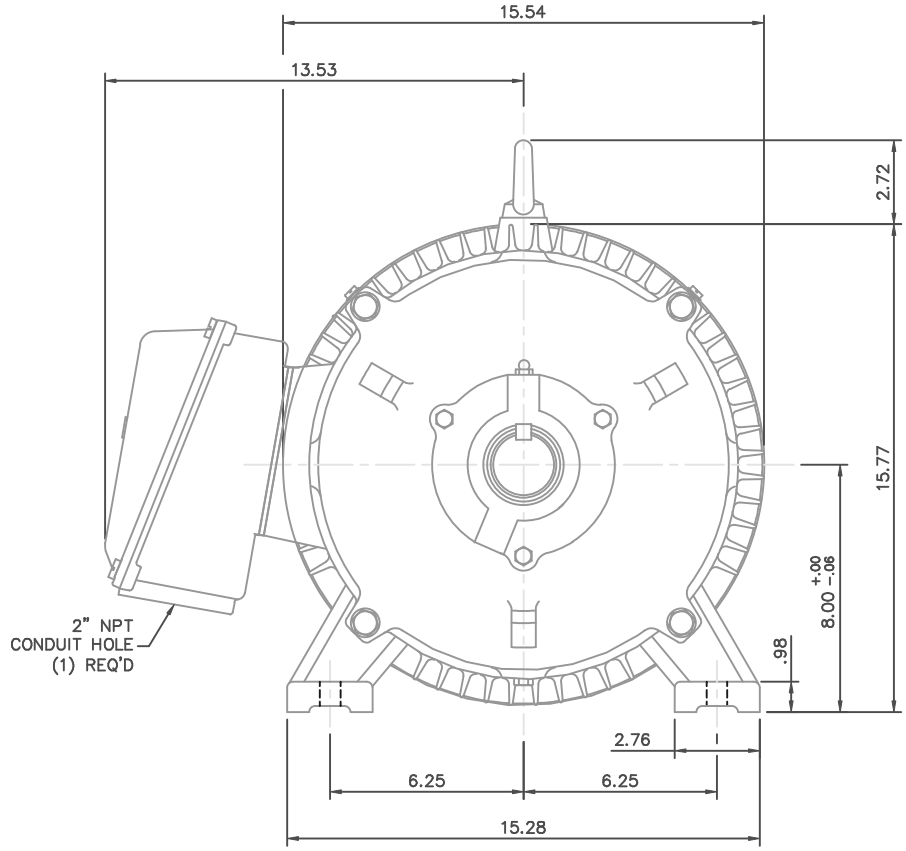

FRAME DESIGN	"C"
324T	29.53
326T	31.02

NO.	REVISION	BY & DATE	CHK
01	ADDED HOLE FOR 326T BASE	JJK 07/13/99	

TOLERANCES UNLESS SPECIFIED

DEC.	INCHES
.X	±.1
.XX	±.03
.XXX	±.005
.XXXX	±.0005
ANG	±1/2°

MARATHON ELECTRIC

TITLE: OUTLINE – 320T FRAME TEFC – RIGID

MAT'L.: CAST IRON

FINISH

CAD FILE: 16954160ME

RFP

DIST

DRAWN JJK 03/29/99

CHK

APPD PG 03/31/99

SCALE 1=4

REF 169504

FMF

PREV

SIZE B | DRAWING NO. 169541–60ME | REV. 01

THIS DRAWING IN DESIGN AND DETAIL IS OUR PROPERTY AND MUST NOT BE USED EXCEPT IN CONNECTION WITH OUR WORK ALL RIGHTS OF DESIGN AND INVENTION ARE RESERVED
THIS IS AN ELECTRONICALLY GENERATED DOCUMENT – DO NOT SCALE THIS PRINT

Installation, Operation and Maintenance Instructions

for AC Induction Motors
56- 6800 Frames (NEMA)
63 – 280 Frames (IEC)

MARATHON ELECTRIC
Contact Motor Customer Service at:
Phone: (715) 675-3311
www.marathonelectric.com

Form 5554E

INSTALLER: PLEASE LEAVE THIS MANUAL FOR THE OWNER'S USE
OWNER: READ AND SAVE THESE INSTRUCTIONS

SAFETY INSTRUCTIONS

⚠ This is the safety alert symbol. It is used to alert you to potential personal injury hazards. Obey all safety messages that follow this symbol to avoid possible injury or death.

⚠ WARNING
Before installing, using, or servicing this product, carefully read and fully understand the instructions including all warnings, cautions, & safety notice statements. To reduce risk of personal injury, death and/or property damage, follow all instructions for proper motor installation, operation and maintenance.

These instructions are not intended as a complete listing of all details for installation, operation, and maintenance. If you have any questions concerning any of the procedures, STOP, and call the appropriate Regal-Beloit motor company.

Table of Contents

1.0 INSTALLER / OWNER / OPERATOR RESPONSIBILITY
1.1 Electrical Safety
1.2 Mechanical Safety
1.3 Environmental Safety
2.0 RECEIVING & INSPECTION
2.1 Initial Inspection
2.1.1 Packing List & Inspect
2.1.2 Turn Motor Shaft
2.1.3 Check Nameplate
2.2 Handling
2.2.1 Correct Lifting Angles
2.3 Storage
2.3.1 Bearing Lubrication
2.3.2 Shaft Rotation
2.3.3 Damp or Humid Storage Locations
3.0 INSTALLATION AND OPERATION
3.1 Location
3.1.1 Selecting a Location
3.1.2 Ambient Temperature Limits
3.1.3 Construction Selection per Location
3.1.3.1 Dripproof
3.1.3.2 Totally Enclosed
3.1.3.3 Hazardous Locations Motors
3.2 Mounting Motor
3.2.1 Rigid Base (Footed)
3.2.2 Rigid Base Hole Selection -6 or 8 Hole Bases
3.2.3 Vertical
3.3 Application Assembly to Motor
3.3.1 General: Proper Alignment
3.3.2 Direct Coupling
3.3.3 Direct Connected
3.3.4 Belted
3.3.5 VFD Operation
3.3.6 Accessories
3.3.6.1 General
3.3.6.2 Brake Motors
3.3.6.3 Space Heaters
3.3.6.4 Thermal Protection General, Thermostats, Thermisters & RTDs
3.3.6.5 RTD Alarm & Trip Settings
3.3.7 Guards
3.4 Electrical Connections
3.4.1 Power Supply / Branch Circuit
3.4.1.1 Branch Circuit Supply
3.4.1.2 Fuses, Breakers, Overload Relays
3.4.1.3 AC Power Supply Limits
3.4.2 Terminal Box
3.4.2.1 Conduit opening
3.4.2.2 Hazardous Locations
3.4.3 Lead Connections
3.4.3.1 Wire Size Requirements (Single Phase)
3.4.3.2 Extension Cords (Single Phase)
3.4.4 Ground Connections
3.4.5 Start Up
3.4.5.1 Start Up – No Load Procedure
3.4.5.2 Start Up – Load Connected Procedure
3.4.5.3 Jogging and/or repeated starts
4.0 MAINTENANCE
4.1 General Inspection

4.1.1 Ventilation
4.1.2 Insulation
4.1.3 Electrical Connections
4.2 Lubrication and Bearings
4.2.1 Grease Type
4.2.2 Bearing Operating Temperature
4.2.3 Lubrication Interval
4.2.4 Lubrication Procedure
4.2.5 Lubrication Example
4.3 Trouble Shooting
4.3.1 General Trouble-Shooting Warnings
4.3.2 Trouble-Shooting Cause / Corrective Action

1.0 INSTALLER/OWNER/OPERATOR RESPONSIBILITY:

1.1 ELECTRICAL SAFETY

⚠ WARNING: ELECTRICAL SHOCK HAZARD
Electrical connections shall be made by a qualified electrical personnel in accordance with all applicable codes, ordinances and sound practices. Failure to follow these instructions could result in serious personal injury, death and/or property damage. Only qualified personnel who are familiar with the applicable National Code (USA = NEC) and local codes should install or repair electrical motors and their accessories.

⚠ WARNING: ELECTRICAL LIVE CIRCUIT HAZARD
Do not touch electrically live parts. Disconnect, lockout and tag input power supply before installing or servicing motor (includes accessory devices). Use a voltmeter to verify that power is off before contacting conductors.

⚠ WARNING: ELECTRICAL GROUNDING HAZARD
Failure to properly ground motors, per the National Electrical Code (NEC) Article 430 and local codes may cause serious injury or death to personnel. For general information on grounding refer to NEC Article 250. (Also see "Ground Connections section 3.4.4").

⚠ WARNING: AUTOMATIC RESET PROTECTOR HAZARD
Do not use automatic reset protectors if automatically restarting the motor will place personnel or equipment at risk. . Failure to follow this instruction could result in serious personal injury, death and/or property damage

⚠ WARNING: MANUAL RESET PROTECTOR HAZARD
If a tripped manual reset thermal protector is exposed to a temperature less than –7°C (20°F) it may reset and restart the motor automatically. If an application requires a motor with a manual reset thermal protector that will be operated at temperatures less than –7°C (20°F) contact the manufacturer to review the application / motor requirements. Failure to follow this instruction could result in serious personal injury, death and/or property damage

1.2 MECHANICAL SAFETY

⚠ WARNING: LOOSE PARTS HAZARD
Before starting the motor, remove all unused shaft keys and loose rotating parts to prevent them from flying off. Failure to follow these instructions could result in serious personal injury, death and/or property damage.

⚠ WARNING: ROTATING PARTS HAZARD
Keep extremities, hair, jewelry and clothing away from moving parts. Failure to follow these instructions could result in serious personal injury, death and/or property damage.

1.3 ENVIRONMENTAL SAFETY

⚠ WARNING: HAZARDOUS LOCATIONS
(1) The NEC and the local authority having jurisdiction must be consulted concerning the installation and suitability of motors for use in Hazardous Locations. The local authority having jurisdiction must make the final determination of what type of motor is required. The application and operation is beyond the control of the motor manufacturer.
(2) Division 1 Hazardous Locations motors can only be modified or reworked by the manufacturer or a facility that is Listed under UL's category "Motors and Generators, Rebuilt for use in Hazardous Locations". Failure to follow these instructions could result in serious personal injury, death and/or property damage.
(3) Do not use a Hazardous Locations motor with a Variable Frequency Drive (VFD) unless the motor nameplate specifically states that the motor is suitable for use on Pulse Width Modulated (PWM) type VFD power. In addition, the nameplate must be marked with the inverter rating; for example, "2:1 CT", "2 to 1 Constant Torque", etc.

2.0 RECEIVING AND INSPECTION

2.1 INITIAL INSPECTIONS

2.1.1 CHECK PACKING LIST AND INSPECT the packaging to make certain no damage has occurred in shipment. If there is visible damage to the packaging, unpack and inspect the motor immediately. Claims for any damage done in shipment must be made by the purchaser against the transportation company.

2.1.2 TURN MOTOR SHAFT by hand to be certain that it rotates freely. Note: Shaft seals and bearing seals may add drag.

2.1.3 CHECK NAMEPLATE for conformance with purchase order requirements and compliance with power supply and control equipment requirements.

2.2 HANDLING:

⚠ WARNING: FALLING OBJECT HAZARD
Eyebolts or lifting lugs, where provided, are intended for lifting only the motor and accessories mounted by the motor manufacturer (unless specifically stated otherwise on the motor). Utilizing the motor lifting provision to lift other components such as pumps and gear boxes could result in serious personal injury, death and/or property damage.

⚠ WARNING: FALLING OBJECT HAZARD
Before using the lifting provision, check the eyebolts and/or other lifting means to assure they are not bent or damaged and are completely threaded, seated & secured to the motor. Equipment to lift motor must have adequate lifting capacity. While lifting the motor DO NOT stand under or in the vicinity of the motor. Failure to follow these instructions could result in serious personal injury, death and/or property damage.

2.2.1 LIFTING ANGLE LIMITATIONS

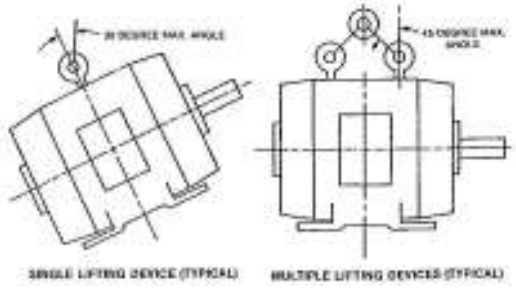

2.3 STORAGE: Motors, not put into service immediately, must be stored indoors in a clean, dry location. Avoid locations with large temperature swings that will result in condensation. Motors must be covered to eliminate airborne dust and dirt. If the storage location exhibits high vibration, place isolation pads under motor to minimize damage to motor bearings.

2.3.1 BEARING LUBRICATION: Bearings are grease packed at the factory; relubrication upon receipt of motor or while in storage is not necessary. If stored more than one year, add grease per lubrication instructions (Table 4-4) before start-up.

2.3.2 SHAFT ROTATION: It is recommended that the motor shaft be rotated 5 to 10 rotations every three months to distribute the grease in the bearings. This will reduce the chance for corrosion to form on the bearing rolling elements and raceways. Note: Shaft seals and bearing seals may add drag.

2.3.3 DAMP OR HUMID STORAGE LOCATIONS: Treat unpainted flanges, shafts, and fittings with a rust inhibitor. Apply appropriate power to the motor's space heaters (if so equipped)

3.0 INSTALLATION AND OPERATION

⚠ **WARNING:** Only qualified personnel who are familiar with the appropriate national code, local codes and sound practices should install or repair electrical motors and their accessories. Installation should conform to the appropriate national code as well as local codes and sound practices. Failure to follow these instructions could result in serious personal injury, death and/or property damage.

⚠ **WARNING: ELECTRICAL LIVE CIRCUIT HAZARD**
Do not touch electrically live parts. Disconnect, Lockout and Tag input power supply before installing or servicing motor (includes accessory devices). Use a voltmeter to verify that power is off before contacting conductors.

3.1 LOCATION

3.1.1 SELECTING A LOCATION: Consideration should be given to environment and ventilation. Motors should be installed in an area that is protected from direct sunlight, corrosives, harmful gases or liquids, dust, metallic particles, and vibration. A motor with the proper enclosure for the expected operating condition should be selected. Provide accessible clearance for cleaning, repair, service, and inspections (See section 3.1.3 for construction clearances). The location should be considered for possible future motor removal / handling. The free flow of air around the motor should not be obstructed.

3.1.2 AMBIENT TEMPERATURE LIMITS: The ambient temperatures of the air inlet to the motor should not exceed 40°C (104°F) or be less than -30°C (-22°F) unless the motor nameplate specifically states an ambient temperature outside of these limits. The ambient inside an enclosure built around the motor shall not exceed the nameplate ambient. For ambient temperatures outside of these limits consult the motor manufacturer.

⚠ **CAUTION: INSULATION DEGRADATION WARNING**
Insulation at high temperatures ages at an accelerated rate. Each 10°C increase in temperature reduces the insulation life by one half.

⚠ **WARNING: HAZARDOUS LOCATIONS AMBIENT LIMIT:** Division 1 Hazardous Locations motors shall **NOT** be operated below –25°C (-13°F) ambient. (Low temperatures reduce the component mechanical properties.)

3.1.3 CONSTRUCTION SELECTION per LOCATION:

3.1.3.1 DRIPPROOF (OPEN) MOTORS are intended for use indoors where the atmosphere is relatively clean, dry, and non-corrosive. Recommended a minimum clearance of ½ the shaft height between vent openings and the nearest obstruction.

3.1.3.2 TOTALLY ENCLOSED MOTORS are suitable for indoor or outdoor standard service applications.

TEAO or AOM (Totally Enclosed Air Over) motors must be mounted in the air stream. When the motor nameplate states a minimum airflow the motor must be mounted in an air stream meeting this minimum value.

TEFC (Totally Enclosed Fan Cooled) motors must meet a minimum distance of ½ the shaft height between the fan guard grill openings and the nearest obstruction.

3.1.3.3 HAZARDOUS LOCATIONS MOTORS: Hazardous Locations motors are intended for installations in accordance with NEC Article 500. For all installations involving Hazardous Locations motors, consult the applicable national codes, local codes, and the authority having jurisdiction.

Division 1 Installations – includes Class I & II: Use only motors that are UL Listed and CSA Certified or UL Listed and UL Certified for Canada. These motors bear a separate nameplate that includes the UL Listing Mark and CSA Certification Mark or includes the UL Listing Mark and the UL Mark for Canada. This plate also bears the phrase: " Electric motor for Hazardous Locations" and is marked with the Class, Group and Operating Temperature Code.

Division 2 Installations – Class I only: Use only motors that are CSA Certified and bear the CSA Certification Mark. These motors include a phrase on the main motor nameplate that indicates the motor is CSA Certified for Class I, Division 2 / Zone 2 locations.

Division 2 Installation – Class II only: Use only Class II motors as described above under "Division I Installations".

⚠ **WARNING: EXPLOSION HAZARD**
A motor should never be placed in an area with a hazardous process or where flammable gases or combustible materials may be present unless it is specifically designed and nameplated for this type of service. Hazardous Locations motors are intended for installations in accordance with NEC Article 500. For all installations involving Hazardous Locations motors, consult the NEC, local codes, and the authority having jurisdiction. Failure to follow these instructions could result in serious personal injury, death and/or property damage. (For other limitations see section 1.3)

3.2 MOUNTING MOTOR:

3.2.1 RIGID BASE (FOOTED): The motor must be securely installed to a rigid foundation or a mounting surface to minimize vibration and maintain alignment between the motor shaft and the load's shaft. The mounting surfaces of the four mounting pads must be flat within 0.01 inches for 210 frame & smaller; 0.015 inches for 250 frame & larger. [IEC 0.25 mm for 130 frame & smaller, 0.38 mm for 160 frame & larger]. This may be accomplished by shims under the motor feet. For special isolation mounting, contact manufacturer for assistance

3.2.2 RIGID BASE HOLE SELECTION -6 OR 8 HOLES

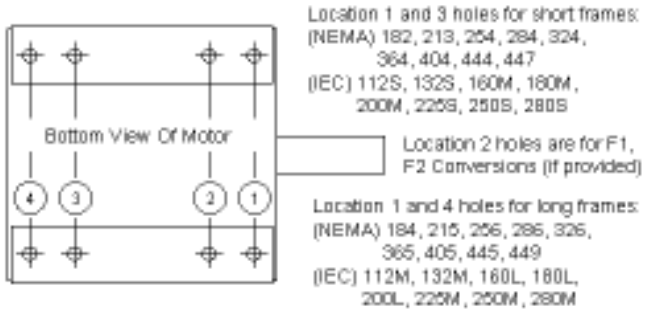

3.2.3 VERTICAL MOUNTING:

CAUTION: ENCLOSURE PROTECTION CAUTION: Most Dripproof rigid base (footed) motors do **NOT** meet "Dripproof" requirements when mounted vertically. If the motor is located in unprotected environments, the addition of a drip cover may be available. Drip covers not available for cast iron rigid base motors.

⚠ **WARNING: FALLING OBJECT HAZARD**
The lifting provision on standard horizontal footed motors is not designed for lifting the motor in a vertical shaft up or shaft down position. (see 2.2.1 lifting angles). Lifting method / provisions for

mounting a rigid base (footed) motor vertically is the responsibility of the installer.

VERTICAL SHAFT DOWN: Most standard horizontal motors thru 449 Fr. (excluding brake motors) can be mounted in a vertical shaft down orientation. For vertical brake motors see section 3.3.6.2.

VERTICAL SHAFT UP:

⚠ **WARNING: HAZARDOUS LOCATIONS VERTICAL MOUNT:** Hazardous locations motors must **NOT** be mounted vertically shaft up without approval by the motor manufacturer. Without proper retaining provisions the rotor may move axially and contact components, creating a spark hazard.

Belted or Radial Load when mounted vertically: The following frame sizes / constructions with applied (axial) down loads within the limit stated are acceptable when mounted vertical shaft up.

Table 3-1 Belted or Radial Load Applications (All speeds)

Frame Size	Enclosure	Construction	Shaft Up OK	Max Applied Down Load[3]
56	TEFC & ODP	Steel	Yes	25 lbs
140	TEFC	Steel & Cast Iron	Yes	25 lbs
	ODP	Steel	Yes	25 lbs
180	TEFC	All	Yes	35 lbs
	ODP	Steel	Yes	35 lbs
210	TEFC	All	Yes	40 lbs
	ODP	Steel	Yes	40 lbs
250	TEFC	All	Yes	40 lbs
	ODP	Steel	Yes	40 lbs
		Cast Iron	No[2]	N/A
280-320	320 TTFC models	Cast Iron	Eng[1]	N/A
	All Other TEFC	Cast Iron & Aluminum	Yes	30 lbs
	ODP	Cast Iron	No[2]	N/A
	TEFC & ODP	Steel	Build Up Only[4]	N/A
360 & Up	TEFC	Cast Iron	Build Up Only[4]	N/A
	ODP	Cast Iron	No[2]	N/A
	TEFC & ODP	Steel	Build Up Only[4]	N/A

Notes:

1 For TEFC model numbers beginning with 324TTFC or 326TTFC consult the motor manufacturer to determine if a build up motor is required.

2 The max applied down load is any applied load external to the motor, including such things as sheave weight, fan loads, axial belt force, pump load, etc. If the application is direct drive with no applied radial load, consult the motor manufacturer.

3 "Build-up only", refers to motors that are specifically ordered and built for shaft up applications. It does not imply that all build-up motors are suitable for shaft up applications.

3.3 APPLICATION ASSEMBLY TO MOTOR:

⚠ **CAUTION: EQUIPMENT DAMAGE:**
Do not connect or couple motor to load until correct rotational direction is established.

3.3.1 GENERAL: PROPER ALIGNMENT of the motor and driven equipment minimizes vibration levels, maximizes bearing life, and extends the overall life of the machinery. Consult the drive or equipment manufacturer for more information.

⚠ **CAUTION: BEARING FAILURE**
During assembly do NOT force components onto the shaft. Striking or hammering the component may result in bearing damage.

3.3.2 DIRECT COUPLING: Use flexible couplings if possible. For applications that apply radial, axial or moment loading on the motor shaft see section 3.3.3.

⚠ **CAUTION: BEARING FAILURE**
Unless approved by the motor manufacturer do **NOT** direct couple a vertical shaft up or roller bearing motor. Direct coupling a vertical shaft up motor or a motor with a roller bearing may result in bearing damage.

3.3.3 DIRECT CONNECTED: Radial loading for direct connected equipment (gears, fans etc.) must be approved by the motor manufacturer unless within the maximum overhung load limits (Table 3-2). Combined loading (axial, radial and/or moments) must be approved by motor manufacturer. For belted loads see section 3.3.4.

Table 3-2 Maximum Radial Load (lbf) @ Middle of the Shaft Extension Length

Frame Number	Motor Rated RPM			
	3600	1800	1200	900
143T	106	166	193	210
145T	109	170	199	218
182T	187	230	261	287
184T	193	237	273	301
213T	319	317	470	510
215T	327	320	480	533
254T	500	631	729	793
256T	510	631	736	820
284T	-	866	990	1100
286T	-	871	1005	1107
324T	-	950	1100	1215
326T	-	950	1113	1230
364T	-	1078	1365	1515
365T	-	1078	1380	1540
404T	-	1388	1590	1762
405T	-	1400	1610	1780
444T	-	1580	1795	2005
445T	-	1520	1795	1985
447T	-	1455	1765	1985
449T	-	1640	1885	2130

Values based on 26,280 hrs B-10 Life
For "End of Shaft" Load multiply value by 0.88
To convert from lbf to N multiply value by 4.4482.

3.3.4 BELTED:

The goal of any belted system is to efficiently transmit the required torque while minimizing the loads on the bearings and shafts of the motor and driven equipment. This can be accomplished by following four basic guidelines:

1. Use the largest practical sheave diameter.
2. Use the fewest number of belts possible.
3. Keep sheaves as close as possible to support bearings.
4. Tension the belts to the lowest tension that will still transmit the required torque without slipping. It is normal for V-belts to squeal initially when line starting a motor

3.3.4.1 Sheave Diameter Guidelines:

In general, smaller sheaves produce greater shaft stress and shaft deflection due to increased belt tension. See Table 3-3 for recommended minimum sheave diameters. Using larger sheaves increases the contact with belts which reduces the number of belts required. It also increases the belt speed, resulting in higher system efficiencies. When selecting sheaves, do not exceed the manufacturer's recommended maximum belt speed, typically 6,500 feet per minute for cast iron sheaves. Determine belt speed by the following formula:

Figure 1

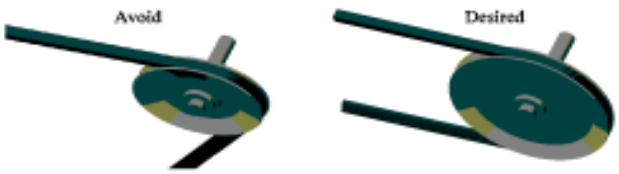

BELT SPEED (Ft/min) = $\dfrac{Shaft\ RPM\ x\ 3.14\ x\ Sheave\ Dia\ (inches)}{12}$

3.3.4.2 Number of Belts

In general, use the fewest number of belts that will transmit the required torque without slipping. See Table 3-3 for recommended maximum number of belts. Each belt adds to the tension in the system, which increases load on the shafts and bearings. Belts are most efficient when operated at or near their rated horsepower.
If the sheaves have more grooves than the number of belts required, use the grooves closest to the motor.

3.3.4.3 Sheave Location

Install sheaves as close to the housing as possible to increase the bearing life of the motor and driven equipment

Figure 2

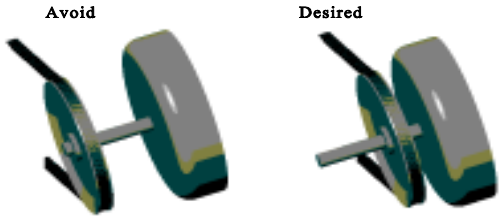

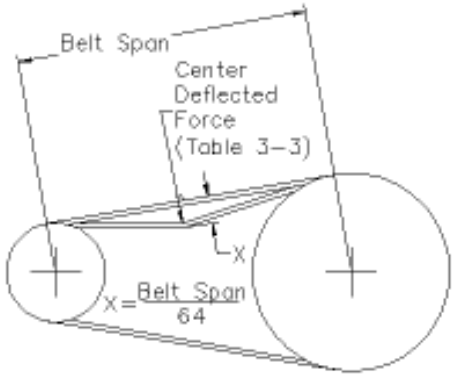

3.3.4.4 Belt Tension

CAUTION: Equipment Failure Caution

Belt tensioning by feel is **NOT** acceptable. Tensioning by "feel" can be very misleading, and can damage motor and equipment.
It is normal for V-belts to squeal initially when line starting a motor.

In general, belt tensions should be kept as loose as possible while still transmitting the required torque without slipping. Belt tensions must be measured with a belt tension gage. These inexpensive gages may be obtained through belt manufacturers, or distributors.

Proper belt tension is determined by measuring the force required to deflect the center of the belt a given distance. The proper deflection (in inches) is determined by dividing the belt span in inches by 64. Calculate the proper deflection and then see Table 3-3 for the required “Deflected Force” to achieve that deflection.
After tensioning the belt, rotate the sheaves for several rotations or operate the system for a few minutes to seat belts into the grooves, then re-tension the belts. New belts will stretch during use, and should be retensioned after the first eight hours of use.

Table 3-3 Recommended Minimum Sheave Diameters, Belt Type, Number of Belts and Deflected Force

Motor Hp	1200 rpm				1800 rpm				3600 rpm			
	Min Sheave Dia (in)	Belt Type	Max # of Belts	Avg. Deflected Force (lbs)	Min Sheave Dia (in)	Belt Type	Max # of Belts	Avg. Deflected Force (lbs)	Min Sheave Dia (in)	Belt Type	Max # of Belts	Avg. Deflected Force (lbs)
0.75	2.2	3VX	1	3.4	2.2	3VX	1	2.2	2.2	3VX	1	1.2
1	2.4	3VX	1	4.0	2.2	3VX	1	3.1	2.2	3VX	1	1.6
1.5	2.4	3VX	2	3.1	2.4	3VX	2	2.1	2.2	3VX	1	2.5
2	2.4	3VX	3	2.8	2.4	3VX	2	2.9	2.4	3VX	1	2.7
3	3.0	3VX	2	3.3	2.4	3VX	3	2.9	2.4	3VX	2	2.3
5	3.0	3VX	3	4.0	3.0	3VX	3	3.7	2.4	3VX	3	2.5
7.5	3.8	3VX	4	4.7	3.0	3VX	4	4.1	3.0	3VX	2	4.2
10	4.4	3VX	4	5.4	3.8	3VX	4	4.3	3.0	3VX	3	3.8
15	4.4	3VX	5	5.4	4.4	3VX	4	5.4	3.8	3VX	3	4.4
20	5.2	3VX	6	6.0	4.4	3VX	6	4.8	4.4	3VX	3	5.0
25	6.0	3VX	7	5.6	4.4	3VX	7	5.2	4.4	3VX	4	4.7
30	6.8	3VX	7	5.9	5.2	3VX	7	5.3				
40	6.8	5VX	4	11.6	6.0	3VX	7	6.0				
50	8.2	5VX	4	14.6	6.8	3VX	8	5.9				
60	8.2	5VX	5	14.1	7.4	5VX	4	13.3				
75	10.0	5VX	5	14.5	8.6	5VX	4	14.3				
100	10.0	5VX	6	16.0	8.6	5VX	6	13				
125	12.0	5V	7	14.1	10.5	5V	6	13.1				
150	13.2	5V	7	15.4	10.5	5V	7	13.4				
200	15.0	5V	8	16.0	13.2	5V	8	13.1				
250	15.0	8V	6	27.6	14.0	5V	9	13.8				
300	16.0	8V	7	27.1	14.0	5V/**8V**	11 / **7**	23.4				
350	16.5	8V	7	30.3	14.5	5V/**8V**	12 / **7**	26.0				
400	17.5	8V	8	29.1	15.0	5V/**8V**	13 / **8**	25.7				
450	18	8V	8	31.6	16.0	5V/**8V**	14 / **9**	25.2				
500	18.5	8V	9	30.7	16.5	5V/**8V**	15 / **9**	26.9				
600					17.5	8V	11	26.3				
700					19.0	8V	12	27.3				
800					20.0	8V	13	28.2				

Contact Motor Manufacturer when Belting 3600 rpm Motors Greater than 25 HP

Notes:

1. Horsepower is the nameplate motor horsepower, and RPM is the motor (driver) speed.
2. Minimum sheave diameters are from NEMA standards where applicable.
3. **For variable speed applications or values outside these recommendations, consult motor manufacturer.**
4. Selections are based on a 1.4 service factor, 5 to 1 speed ratio and various Power Transmission Manufacturers' catalogs.
5. These selections are for Narrow V-belt sections only. Consult manufacturer for details on conventional V-belt sections (A, B, C, D and E), or other belt types.
6. "Average Deflected Force is per section 3.3.4.4 of this document and is the force required to deflect the center of a belt 1/64 of the belt span distance. Tolerance on this force is ±1 lbf for forces ≤10 lbs, and ±2 lbs for forces >10 lbs as measured utilizing a belt tension gage.
7. When more than one belt is required the belts must be a matched set (matched for length).
8. If possible, the lower side of the belt should be the driving side to increase the length of wrap on the sheave).
9. For belted loads do not exceed 125% of 60 Hz operating RPM.

3.3.5 VFD (Variable Frequency Drives) OPERATION:

⚠ WARNING: VFD Motors with Reset Thermal Protectors

UL Recognition, UL Listing, or CSA certification does not apply to motors that are equipped with a manual or automatic reset thermal protector when the motor is operated on VFD power.

⚠ WARNING: Power Factor Correction Capacitors:

Power factor correction capacitors should never be installed between the drive and the motor.

⚠ CAUTION: VFD / Motor Setup:

It is the responsibility of the startup personnel during set up of the VFD / motor system to properly tune the drive to the motor for the specific application per the VFD user manual. The correct voltage boost and volts per hertz settings are application dependent and unique to each motor design. Failure to connect over temperature devices (when provided) will void the warranty.

3.3.5.1 Overspeed Capability:

Belted loads: Do not exceed 125% of 60 Hz operating RPM.

Table 3-4 Maximum Safe Continuous Speed (RPM) For Coupled and Direct Connected Loads

NEMA / [IEC] Frame Size	2-Pole	4, 6, or 8 Pole
56-180 [80-110]	7200 *	5400 *
210-250 [130-160]	5400 *	4200*
280 [180]	5400 *	3600
320 [200]	4500 *	3600
360 [225]	4500 *	2700
400-440 [250-280]	3600	2700
>440 [>280]	3600	1800

* = Fan cooled motors (Totally Enclosed & Hazardous Locations Motors) are limited to a maximum safe continuous speed of 4000 RPM **For higher speeds or shortened duty cycle contact motor manufacturer**

3.3.5.2 Cable Lengths: For optimum insulation life, limit VFD to motor cable lengths of general purpose motors

to Table 3-5 values. Definite purpose VFD motors may accommodate longer cable lengths. For additional information contact motor manufacturer.

Table 3-5 Max Cable Lengths General Purpose Motors

These values are based on 3 kHz carrier frequency. Add suitable VFD output-side filters when exceeding the listed values.

Frame Size	230V	460 V	575 V
NEMA 56-320	600 ft.	125 ft.	40 ft.
NEMA 360-5011	1000 ft.	225 ft.	60 ft.
IEC 80-200	180 m.	40 m.	12 m.
IEC 225-280.	300 m.	70 m.	18 m.

3.3.5.3 VFD Grounding: Equipment grounding conductors may be run in the same conduit as the AC motor power leads. This wire must be used as the equipment ground for the motor and not as the fourth current carrying wire of a "WYE" motor circuit. The grounded metal conduit carrying the output power conductors can provide EMI shielding, but the conduit does not provide an adequate ground for the motor; a separate grounding conductor must be used. Grounding the motor neutral (WYE) of a VFD powered motor may result in a VFD ground fault trip. Improper grounding of an inverter fed motor may result in frame voltages in excess of 500 Volts. Refer to Grounding section 3.4.4

3.3.5.4 VFD – Single Phase:

CAUTION: SINGLE PHASE MOTOR FAILURE:

Single Phase motors are **NOT** suitable for use on VFD power. Connecting a Single Phase Motor to a VFD voids the warranty.

3.3.5.5 Stray Voltage on Accessory Leads:

VFD's will couple stray (common-mode) voltage to motor-mounted RTDs, thermistors, thermostats and space heaters. The leads of these elements must be properly insulated and control input circuits must be designed to withstand this common-mode voltage.

3.3.6 ACCESSORIES / PROVISIONS:

3.3.6.1 General: Carefully read and understand the accessory manufacturer's instructions, supplied with motor. Contact the manufacturer for additional information.

3.3.6.2 Brake Motors:

CAUTION: Vertical Motor Premature Brake Failure

Motors with brakes that are designed for vertical applications are equipped with springs to support the brake pressure plate. Mounting a horizontal brake motor vertically shaft up or down may require a pressure plate spring modification. Failure to modify the brake for the vertical application may result in premature brake failure. If in question, consult brake literature or brake manufacturer.

Brake Solenoid Wiring: Do NOT connect the brake solenoid to the output of a VFD. The brake solenoids must be wired to 50/60 Hz line power

3.3.6.3 Space Heaters:

Motors provided with space heaters have two leads that are brought into the conduit box or into an auxiliary box. These leads are marked "H1", "H2" ("H3", "H4" if a second space heater is supplied). See the space heater nameplate on motor for heater rating.

WARNING: DIVISION 2 EXPLOSION HAZARD

The space heater temperature rating when used in Class I, Division 2 motors shall **NOT** exceed 80% of the auto ignition temperature of the hazardous gas or vapor. See the space heater nameplate on motor for heater Temperature Code and heater rating. Failure to follow this instruction could result in serious personal injury, death and/or property damage

3.3.6.4 Thermal Protection:

General Information: When thermal protection is provided, one of the following will be stamped on the nameplate:

1. **"THERMALLY PROTECTED**" This motor has built in thermal protection. Thermal protectors open the motor circuit electrically when the motor overheats or is overloaded. The protector cannot be reset until the motor cools. If the protector is automatic, it will reset itself. If the protector is manual, disconnect motor from power supply. After protector cools (five minutes or more) press the reset button and reapply power to the motor. In some cases a motor is marked "Auto" and the connection diagram on the motor will identify T'Stat leads – see "2 " below. (See warnings on Manual and Automatic reset protectors - section 1.1)

2. **"WITH OVERHEAT PROTECTIVE DEVICE**": This motor is provided with an overheat protective device that does not directly open the motor circuit. Motors nameplated with this phrase have either thermostats, thermisters or RTD's. The leads to these devices are routed into the motor conduit box or into an auxiliary box. The lead markings are defined on the nameplate (normally "P1", "P2") . The circuit controlled by the overheat protection device must be limited to a maximum of 600 volts and 360 volt-amps. See connection decal provided inside the terminal box cover. Failure to connect these over temperature devices (when provided) will void the warranty.

   WARNING: EXPLOSION HAZARD

   For Hazardous Locations motors provided with thermostats UL and the NEC require connection of thermostat leads into the control portion of a manual reset start circuit. Failure to follow this instruction could result in serious personal injury, death and/or property damage

Resistance Temperature Detectors (RTD): When winding and/or bearing RTDs are provided the RTD lead markings are defined on the nameplate. (Normally "R1", "R2", "R3" etc.)

3.3.6.5 RTD Alarm & Trip Settings:

Tables 3-6 & 3-7 are suggested initial RTD alarm and trip settings. For motors found to operate significantly below these values the settings may be reduced accordingly.

Table 3-6 Winding RTD – Temperature Limit (ºC) 40 ºC Max Ambient

Motor Load	Class B Temp Rise≤ 80ºC		Class F Temp Rise≤ 105ºC	
	Alarm	Trip	Alarm	Trip
Up to 1.0 SF	130	140	155	165
>1.0 to 1.15 SF	140	150	160	165

Table 3-7 Bearing RTD – Temperature Limit (ºC) 40 ºC Max Ambient

Ambient	Alarm	Trip
Up to 40ºC	95	100
> 40ºC	110	115
Bearings that are Heat Stabilized to 150 ºC	130	135

3.3.7 GUARDS:

WARNING: ROTATING PARTS HAZARD

When devices are assembled to the motor shaft, be sure to install protective devices such as belt guards, chain guards, and shaft covers. These devices must protect against accidental contact with extremities, hair, and clothing. Consider the application and provide guarding to protect personnel. Remove all unused shaft keys and loose rotating parts to prevent them from flying off and causing bodily injury. Failure to follow this warning could result in serious personal injury, death and/or property damage.

3.4 ELECTRICAL CONNECTIONS:

WARNING: ELECTRICAL HAZARDS

Before proceeding read Section 1-1 on Electrical Safety. Failure to follow the instructions in Section 1-1 could result in serious personal injury, death and/or property damage

3.4.1 POWER SUPPLY / BRANCH CIRCUIT

WARNING: POWER SUPPLY INCOMPATIBILITY HAZARD

Check power supply to make certain that voltage, frequency and current carrying capacity are in accordance with the motor nameplate. Failure to match motor nameplate values could result in serious personal injury, death and/or property damage

WARNING: BRANCH CIRCUIT SUPPLY HAZARD

Motor and control wiring, fusing, overload protection, disconnects, accessories and grounding must always conform to the applicable electrical codes as well as local codes and sound practices.

3.4.1.1 Branch Circuit Supply to a motor should include a disconnect switch, short circuit current fuse or breaker protection, motor starter (controller) and correctly sized thermal elements or overload relay protection.

3.4.1.2 Fuses, Breakers, Overload Relays

Short Circuit Current Fuses or Breakers are for the protection of the branch circuit. Starter or motor controller overload relays are for the protection of the motor. Each of these should be properly sized and installed per the applicable electrical codes as well as local codes and practices.

WARNING: PROTECTIVE DEVICE DISABLED HAZARD

DO NOT bypass or disable protective devices. Protection removal could result in serious personal injury, death and/or property damage

3.4.1.3 AC Power Supply Limits

Motors are designed to operate within the following limits at the motor terminals:

1- AC power is within +/- 10 % of rated voltage with rated frequency applied. (Verify with nameplate ratings) **OR**

2- AC power is within +/- 5% of rated frequency with rated voltage **OR**

3- A combined variation in voltage and frequency of +/- 10% (sum of absolute values) of rated values, provided the frequency variation does not exceed +/-5% of rated frequency.

4- For 3 phase motors the line to line full load voltage must be balanced within 1%.

5- If the motor is rated 208-230V, the voltage deviations must be calculated from 230V.

CAUTION: Reduced Motor Performance

Operation outside of these limits will degrade motor performance and increase operating temperature.

3.4.2 TERMINAL BOX:

3.4.2.1 Conduit Opening: For ease of connections, motors are typically provided with large terminal boxes. Most motors have conduit access in 90 degree increments, the terminal box conduit opening is typically provided via knockouts, holes with covers, or the terminal box is rotate-able. Fabricated conduit boxes may have a removable plate for the installer to provide correctly sized hole(s).

3.4.2.2 Hazardous Locations Motors:

WARNING: EXPLOSION HAZARDS

(1) Terminal Boxes mounted to motor with a pipe nipple: If a pipe nipple mounted terminal box is removed or rotated it must be reassembled with a minimum of five full threads of engagement.

(2) Component Removal: Do not set a terminal box component on its machined surfaces. Prior to component reassembly wipe clean all machined surfaces.

(3) Machined Surface Gap (Hazardous Locations Terminal Boxes): The gap between mating surfaces with the machined terminal box MUST BE LESS THAN 0.002 inches. This gap must be checked with a feeler gage along the entire perimeter. If there is visible damage to the mating surfaces, or if the gap between these surfaces exceeds 0.002 inches, DO NOT complete the installation and contact the motor manufacturer. Failure to follow these instructions could result in serious personal injury, death and/or property damage

3.4.3 LEAD CONNECTIONS

Electrical connections to be made per nameplate connection diagram or separate connection plate. In making connections follow the applicable electrical code as well as local codes and practices.

WARNING: ELECTRICAL CONNECTION HAZARD

Failure to correctly connect the motor leads and grounding conductor can result in injury or death. Motor lead connections can short and cause damage or injury if not well secured and insulated.

3.4.3.1 Wire Size (Single Phase) Requirements

The minimum wire size for Single Phase, 115 & 230 Volt Circuits must meet table 3-8 for a given distance between motor and either Fuse or Meter Box.

Table 3-8 Minimum Wire Gage Size Single Phase 115 & 230 Volt Circuits

	Distance (Feet) - Motor to Fuse or Meter Box							
Motor	100 Ft.		200 Ft.		300 Ft.		500 Ft.	
HP	115	230	115	230	115	230	115	230
1/4	14	14	10	12	8	10	6	8
1/3	12	14	10	12	6	10	4	8
1/2	10	12	8	10	6	8	4	6
3/4	10	12	6	10	4	8	2	6
1	8	10	6	8	4	6		4
1 1/2	4	10	0	8		6		4
2		8		6		4		2
3		8		6		4		2
5		6		4		2		0

3.4.3.2 Extension Cords (Single Phase Motors):

Where an extension cord(s) is utilized to provide power to the motor the extension cord(s) must be…(1) the proper gauge size per table 3-8, (2) in good working condition (3) properly grounded.

3.4.4 GROUND CONNECTION(S):

WARNING: ELECTRICAL GROUNDING HAZARD

For general information on grounding (USA) refer to NEC Article 250. Improper grounding of an inverter fed motor may result in frame voltages in excess of 500 Volts. In making the ground connection, the installer must make certain that a good electrical connection is obtained between motor and grounding lead. Failure to properly ground motors, per the applicable national code (such as NEC Article 430) and local codes may cause serious injury or death to personnel.

Primary "Internal" Ground: A grounding conductor must be connected to the grounding terminal provided in the terminal housing. This grounding terminal is either a ground screw, ground lug, or a tapped hole to be used with a separately provided ground screw. The internal grounding feature is accessible inside the terminal housing and must be used as the primary grounding connection.

Secondary "External" Ground: Some motors are provided with a supplemental grounding terminal located on the external surface of the motor frame or feet. This external terminal is for supplemental bonding connections where local codes permit or require such connection

3.4.5 START UP:

WARNING: ELECTRICAL SHOCK HAZARD:

Be certain that all connections are secure and the conduit box cover is fastened in place before electrical power is connected. Failure to follow these instructions could result in serious personal injury, death, and/or property damage.

WARNING: LOOSE & ROTATING PARTS HAZARD
Before proceeding read Section 1-2 on Mechanical Safety. Failure to follow the instructions in Section 1-2 could result in serious personal injury, death and/or property damage

WARNING: EXCESSIVE SURFACE TEMPERATURE HAZARD
Motors with the temperature code stated on the nameplate are designed to operate within this limit. Improper application or operation can cause the maximum surface temperature to be exceeded. A motor operated in a Hazardous Location that exceeds this surface temperature limit increases the potential of igniting hazardous materials. *Therefore, motor selection, installation, operation, and maintenance must be carefully considered to ensure against the following conditions:* (1) Motor load exceeds service factor value, (2) Ambient temperature above nameplate value, (3) Voltages outside of limits (3.4.1.3), (4) Loss of proper ventilation, (5) VFD operation exceeding motor nameplate rating, (6) Altitude above 3300 feet / 1000 meters, (7) Severe duty cycles, (8) Repeated starts, (9) Motor stall, (10) Motor reversing, and (10) Single phase operation. Failure to follow these instructions could result in serious personal injury, death and/or property damage.

CAUTION: HOT SURFACE
Normal motor surface temperatures may exceed 90 ° C (194° F). Touching the motor frame may cause discomfort or injury. Surface temperatures should only be measured with suitable instruments and not estimated by hand touch.

3.4.5.1 Start Up - No Load Procedure

1. **Check Instructions:** Before startup carefully read and fully understand these instructions including all warnings, cautions, and safety notice statements.
2. **Motor out of storage after more than three months:** Check winding insulation integrity with a Megger. If winding resistance to ground is less than 1.5 Meg-ohms consult the local authorized service shop before energizing the motor.
3. **Check Installation: Mechanical** - Check tightness of all bolts and nuts. Manually rotate the motor shaft to ensure motor shaft rotates freely. Note: Shaft & bearing seals will add drag.
   Electrical - Inspect all electrical connections for proper terminations, clearance, mechanical tightness and electrical continuity. Be sure to verify connections are made per the nameplate connection diagram or separate connection plate. Replace all panels and covers that were removed during installation before energizing the motor.
4. **Energize Motor: Check Rotation**
   If practical check motor rotation before coupling to the load. Unlock the electrical system. Momentarily provide power to motor to verify direction of rotation. If opposite rotation is required, lock out power before reconnecting motor. If motor has a rotational arrow only operate the motor in the rotation identified. Reapply power to ensure proper operation.
5. **Record No Load Amps, Watts & Voltage:**
   Recommend - To establish a baseline value check and record the no load amps, watts, and voltage.

3.4.5.2 Start Up – Load Connected Procedure

1. **Check Instructions:** Before startup carefully read and fully understand these instructions including all warnings, cautions, & safety notice statements.
2. **Coupling Installation:** Check that the connected equipment is properly aligned and not binding. Check that all guards and protective devices are properly installed.
3. **Energize Motor:** When all personnel are clear of the machine, apply power and verify that the load is not transmitting excessive vibration back to the motor though the shaft or the foundation. Verify that motor amps are within nameplate rating. For repeated starts see 3.4.5.3. The equipment can now be fully loaded and operated within specified limits as stated on the nameplate.

3.4.5.3 Jogging and/or Repeated Starts

Do not start more than twice in succession under full load. Repeated starts and/or jogs of induction motors can cause overheating and immediate failure. Contact the motor manufacturer if it is necessary to repeatedly start or jog the motor.

4.0 MAINTENANCE:

WARNING: Hazardous Locations Motor Repair HAZARD:
Division 1 Hazardous Locations motors can only be modified or repaired by the manufacturer or a facility that is Listed under UL's category "Motors and Generators, Rebuilt for use in Hazardous Locations". Failure to follow these instructions could result in serious personal injury, death and/or property damage.

WARNING: ELECTRICAL SHOCK HAZARD
Electrical connections are to be made by qualified electrical personnel in accordance with all applicable codes, ordinances and sound practices. Failure to follow these instructions could result in serious personal injury, death and/or property damage. Only qualified personnel who are familiar with the applicable national codes, local codes and sound practices should install or repair electric motors and their accessories.

WARNING: ELECTRICAL LIVE CIRCUIT HAZARD
Do not touch electrically live parts. Disconnect, lockout and tag input power supply before installing or servicing motor (includes accessory devices).

4.1 GENERAL INSPECTION

Inspect the motor approximately every 500 hours of operation or every three months, whichever occurs first. Keep the motor clean and the ventilation and fin openings clear. The following steps should be performed at each inspection:

4.1.1 VENTILATION: Check that the ventilation openings and/or exterior of the motor is free of dirt, oil, grease, water, etc, which can accumulate and block motor ventilation. If the motor is not properly ventilated, overheating can occur and cause early motor failure.

4.1.2 INSULATION: Use a "Megger" periodically to ensure that the integrity of the winding insulation has been maintained. Record the Megger readings. If winding resistance to ground is less than 1.5 Meg-ohms consult the local authorized service shop before re-energizing the motor.

4.1.3 ELECTRICAL CONNECTIONS: Check all electrical connectors to be sure that they are tight.

4.2 LUBRICATION & BEARINGS:

The lubricating ability of grease (over time) depends primarily on the type of grease, the size of the bearing, the speed at which the bearing operates and the severity of the operating conditions. Longer bearing life can be obtained if the listed recommendations are followed:

NOTE: If lubrication instructions are provided on the motor nameplate, the nameplate instructions will supersede these instructions. Motors marked "Permanently Lubricated" do not require additional service.

CAUTION: BEARING / MOTOR DAMAGE WARNING
Lubricant should be added at a steady moderate pressure. If added under heavy pressure bearing shield(s) may collapse. Over greasing bearings greatly increases bearing friction and can cause premature bearing and/or motor failure.

4.2.1 GREASE TYPE (unless nameplate states otherwise):
Nameplate Ambient Temperature between -30°C (-22°F) to 65°C (150°F) inclusive: Recommended grease for standard service conditions is Mobil Polyrex ® EM. Equivalent and compatible greases include: Texaco Polystar RB, Rykon Premium #2, Pennzoil Pen 2 Lube, Chevron SRI & Mobil SHC 100.

Nameplate Ambient Temperature below -30°C (-22°F): Special low temperature grease is recommended, such as Aeroshell 7 or Beacon 325 for ball bearings and Mobil SHC 100 for roller bearings.

Nameplate Ambient Temperature above 65°C (150°F): Dow Corning DC44 or equivalent, a special high temperature grease is required. Note that Dow Corning DC44 grease does not mix with other grease types.

4.2.2 BEARING OPERATING TEMPERATURE:

CAUTION: HOT SURFACE

The external surface temperature of the end shield (bracket) bearing hub may reach 100° C (212° F) during normal operation. Touching this surface may cause discomfort or injury. Surface temperatures should only be measured with suitable instruments and not estimated by hand touch.

For RTD settings see Table 3-7.

4.2.3 LUBRICATION INTERVALS: (For motors with regreasing provisions)

Eq. 4.2 Lubrication Interval = [(Table 4-1) hrs] x [Interval Multiplier (Table 4-2)] x [Construction Multiplier (Table 4-3)]

Table 4-1 Lubrication Intervals (Hours) These values are based on average use.

NEMA / [IEC] Frame Size	Operating Speed – RPM (See Table 3.4 for Maximum Operating Speed)					
	<7200	<5400	<4500	<3600	<1800	<1200
56-180 [80-110]	2500 Hrs.	4000 Hrs	5000 Hrs	6000 Hrs.	17000 Hrs.	20000 Hrs.
210-250 [130-160]		2500 Hrs	4000 Hrs	5000 Hrs.	12000 Hrs.	16000 Hrs.
280 [180]		2000 Hrs	3000 Hrs	4000 Hrs.	10000 Hrs.	14000 Hrs.
320 [200]			2000 Hrs	3000 Hrs.	9000 Hrs.	12000 Hrs.
360 [225]			1500 Hrs	2000 Hrs.	8000 Hrs.	10000 Hrs.
400-440 [250 – 280]				1500 Hrs.	4000 Hrs.	7000 Hrs.
>440 [>280]				1000 Hrs.	3000 Hrs.	5000 Hrs.

Seasonal Service: If motor remains idle for more than six months, Lubricate at the beginning of the season, then follow lubrication interval.

Do not exceed maximum safe operating speed Table 3-4 without manufacturer's approval

Table 4-2 Service Conditions

Use highest level Multiplier: Maximum Ambient Temperature and Contamination are independent factors

Severity of Service	Maximum Ambient Temperature	Atmospheric Contamination	Multiplier
Standard	Less than 40° C (104° F)	Clean, Slight Corrosion, indoors, less than 16 hrs per day	1.0
Severe	Above 40° C (104° F) to 50° C	Moderate dirt or Corrosion or outdoors or more than 16 hrs per day	0.5
Extreme	Greater than 50° C or Class H Insulation	Severe dirt or Abrasive dust or Corrosion	0.2

Table 4-3 Construction Multiplier

Construction	Multiplier
Angular Contact or Roller Bearing	0.5
Vertical Motor	0.5
All others	1.0

Table 4-4 Relubrication Amounts

Frame Size		Volume		
NEMA	IEC	Cu. In.	Fluid oz	ml
48-56	80	0.25	0.14	4.0
143-145	90	0.25	0.14	4.0
182-184	110	0.50	0.28	8.0
213-215	130	0.75	0.42	12.5
254-256	160	1.00	0.55	16.0
284-286	180	1.50	0.83	25.0
324-326	200	2.00	1.11	33.0
364-365	225	3.00	1.66	50.0
404-405	250	3.80	2.11	62.0
444-449	280	4.10	2.27	67.0
>449	>280	4.50	2.50	74.0

For regreasing while operating multiply volume by 125%.

4.2.4 LUBRICATION PROCEDURE: (For Motors with Regreasing Provisions)

CAUTION: BEARING DAMAGE WARNING
Added grease must be compatible with the original equipment's grease. If a grease other than those stated in 4.2.1 is to be utilized contact the motor manufacturer. Nameplate information supersedes section 4.2.1 (GREASE TYPE). New grease must be free of dirt. Failure to follow these instructions and procedure below may result in bearing and/or motor damage.

For an extremely dirty environment, contact the motor manufacturer for additional information.

LUBRICATION PROCEDURE:

1. Clean the grease inlet plug or zerk fittings prior to regreasing.
2. (If present) Remove grease drain plug and clear outlet hole blockage.

CAUTION: GREASE DRAIN PLUGGED:
Old grease may completely block the drain opening and must be mechanically removed prior to regreasing. Forcing a blocked drain open by increased greasing pressure may collapse bearing shields and / or force excess grease through the bearings and into the motor.

3. Add grease per Table 4-4
4. Re-install grease inlet and drain plugs (if removed).

⚠ WARNING: EXPLOSION HAZARD
Do NOT energize a Hazardous Locations motor without all grease fittings properly installed.

4.2.5 EXAMPLE: LUBRICATION

Assume - NEMA 286T (IEC 180), 1750 RPM Vertical motor driving an exhaust fan in an ambient temperature of 43° C and the atmosphere is moderately corrosive.

1. Table 4-1 list 10,000 hours for standard conditions.
2. Table 4-2 classifies severity of service as "Severe" with a multiplier of 0.5.
3. Table 4-3 lists a multiplier value of 0.5 for "Vertical"
4. (Eq. 4.2) Interval = 10,000 hrs x 0.5 x 0.5 = 2500 hrs

Table 4-4 shows that 1.5 in^3 of grease is to be added.

Relubricate every 2,500 hrs of service with 1.5 in^3 of recommended grease.

4.3 TROUBLE-SHOOTING

⚠ WARNING: READ INSTRUCTIONS:
Before trouble-shooting a motor, carefully read and fully understand the warnings, cautions, & safety notice statements in this manual.

⚠ WARNING: Hazardous Locations Motor Repair:
Motors nameplated for use in Division 1 Hazardous Locations can only be disassembled, modified or repaired by the plant of manufacturer or a facility that is Listed under UL's category "Motors and Generators, Rebuilt for use in Hazardous Locations". Failure to follow these instructions could result in serious personal injury, death and/or property damage

CAUTION: DISASSEMBLY APPROVAL REQUIRED:
Motor disassembly must be performed by a party approved by the motor manufacturer. To disassemble the motor without approval voids the warranty.

4.3.1 GENERAL TROUBLE-SHOOTING WARNINGS

1. **DISCONNECT POWER TO THE MOTOR BEFORE PERFORMING SERVICE OR MAINTENANCE.**
2. **Discharge all capacitors before servicing motor.**
3. **Always keep hands and clothing away from moving parts.**
4. **Be sure required safety guards are in place before starting equipment.**
5. **If the problem persists contact the manufacturer.**

4.3.2 Motor Trouble-shooting Cause / Corrective Action - Table 4-5

Issue:	Likely Cause:	Corrective Action:
Motor fails to start upon initial installation:		
A.)	Supply voltage is too low or is severely unbalanced (one phase is low or missing).	(1) Check power supply fuses (2) Match motor lead wiring to nameplate connection diagram and supply voltage (3) Ensure that steady state supply voltage at motor terminals is within limits (see section 3.4.1.3). Correct as needed (4) Obtain correct motor to match actual supply voltage.
B.)	Motor leads are miswired at conduit box.	
C.)	Driven load exceeds motor capacity	(1) Verify that motor & load turn freely (2) Disconnect motor from load & ensure motor turns freely. Note: Roller bearings make noise when motor is uncoupled and shaft is rotated (3) Verify that motor starts when disconnected from load (4) Remove excessive / binding load if present.
D.)	Load is jammed.	
E.)	Fan guard is bent and making contact with fan	Replace fan guard & fan (if blades are damaged)
F.)	VFD with power factor capacitors installed	Remove power factor correction capacitors if equipped
G.)	VFD with motor neutral lead grounded	Ensure that motor neutral lead is ungrounded
H.)	VFD programmed incorrectly	(1) Repeat checks listed above (2) Verify that VFD current limit and starting boost are set correctly (5) Double-check motor and feedback parameter settings and VFD permissives (6) Repeat autotune (for vector drives) procedure (7) Consult VFD supplier.
Motor has been running, then slow down, stalls, or fails to restart:		
A.)	Supply voltage has drooped or has become severely unbalanced	(1) Replace fuse or reset circuit breaker. Allow motor to cool down before resetting manual protector on motor. **Warnings** - See section 1.1 for automatic and manual reset protector warnings (2) Verify that rated and balanced supply voltage has been restored before restarting motor. Measure voltage during restart. Ensure that steady state supply voltage at motor terminals is within limits (see section 3.4.1.3).
B.)	Motor is overloaded	(1) Verify that motor & load turn freely. Repair binding components as needed (2) Reduce driven load to match motor capacity or increase motor size to match load requirements.
C.)	Motor bearings are seized	
D.)	Load Is jammed.	
E.)	VFD will not restart motor after tripping	(1) Check fault codes on VFD and follow VFD troubleshooting procedures (2) Verify that VFD input voltage is balanced and within limits (3) Remove excessive mechanical load if present.
F.)	Capacitor failure on single phase motor (if equipped)	**Warning: Potential Shock Hazard**: Contact service shop to check capacitor.
Motor takes too long to accelerate:		
A.)	Motor leads are not connected correctly	Match motor lead wiring to nameplate diagram.
B.)	Supply voltage has drooped or become severely unbalanced.	(1) Ensure that steady state supply voltage at motor terminals is within limits (see section 3.4.1.3). Correct as needed (2) Obtain correct motor to match actual supply voltage.
C.)	Load exceeds motor capability	Determine correct motor size and contact motor representative to obtain replacement motor.
D.)	Faulty start capacitor (Single Phase)	Motor may be too small for load. Record acceleration time. Start capacitors may fail if acceleration time exceeds 3 seconds.
E.)	Mechanical Failure	(1) Check to make sure motor & load turn freely (2) Disconnect motor from load & ensure motor turns freely
Motor rotates in the wrong direction:		
A.)	Incorrect wiring connection at motor	[Single Phase] Reconnect motor according to wiring schematic provided. Note: Some motors are non-reversible
		[Three Phase] Interchange any two power supply (phase) leads.
Motor overheats or overload protector repeatedly trips		
A.)	Driven Load is excessive	(1) If motor current exceeds nameplate value, ensure that driven load has not increased. Correct as needed. (2) If new motor is a replacement, verify that the rating is the same as the old motor. If previous motor was a special design, a general purpose motor may not have the correct performance.
B.)	Ambient temperature too high	Most motors are designed to operate in an ambient up to 40 °C. (See section 4.2.2 Hot Surface Caution)
C.)	Motor cooling fins and/or vent openings blocked	Remove foreign materials – clear vent openings, fan guard air inlets and frame fins (TEFC motors)
D.)	Insufficient Air Flow	TEAO (Totally Enclosed Air Over) motors: Measure airflow next to motor surface and obtain minimum requirements from motor manufacturer.

	E.)	Motor is started too frequently	See section 3.4.5.3
	F.)	Supply voltage too low, too high, or unbalanced	(1) Ensure that steady state supply voltage at motor terminals is within limits (see section 3.4.1.3) Correct as needed (2) Reconnect motor per input voltage (3) Obtain correct motor to match power supply.

Motor Vibrates

	A.)	Motor misaligned to load.	Realign load
	B.)	Load out of balance (Direct drive application)	(1) Ensure that load is dynamically balanced: (2) Remove motor from load and inspect motor by itself. Verify that motor shaft is not bent. Rule of thumb is 0.002" runout for shafts extension lengths up to 3.00". Add 0.0005" per every additional inch of shaft length beyond 3.00".
	C.)	Uneven tension on multiple belts	Mixing new with used belts. Replace multiple belt applications with a complete set of matched belts.
	D.)	Driven load operating at resonant point / natural frequency.	(1) De-energize motor and record vibration as load coasts from 100% speed to 0 RPM. If vibration drops immediately, vibration source is electrical. If levels do not drop immediately, source is mechanical (2) Redesign system to operate below the resonant point (3) On VFD-driven loads, program skip frequencies to bypass resonant points (4) Increase carrier frequency to obtain <3% THD current (5) On variable torque loads reduce volts/hertz below base speed.
	E.)	VFD torque pulsations	(1) Adjust VFD to obtain <3% THD current @ rated motor current (2) Adjust VFD stability for smooth operation. Vector drives may be unstable at light load.
	F.)	Motor miswired at terminal box	Match motor lead wiring to nameplate connection diagram.
	G.)	Uneven, weak or loose mounting support.	Shim, strengthen or tighten where required.
	H.)	Motor bearings defective	Test motor by itself. If bearings are bad, you will hear noise or feel roughness. Roller bearings are normally noisy when operated without load. If sleeve bearing, add oil per nameplate instructions. For motors with regreasing provisions, add grease per relubricating instructions (see section 4.2.3). If noise persists contact warranty service.
	I.)	Motor out of balance	Disconnect from load. Set motor on rubber pads on solid floor. Secure a ½ height key in shaft keyway and energize from balanced power supply @ rated voltage. Record vibration levels and compare with appropriate standards. If excessive vibration persists contact motor manufacturer.

Bearings repeatedly fail.

	A.)	Load to motor may be excessive or unbalanced	(1) If belt drive check system per section 3.3.4. (2) Other than belting, check loading on motor shaft. An unbalanced load will also cause the bearings to fail. (3) Check runouts of mating components, such as a C-face and pump flange.
	B.)	Bearings contaminated.	Motor enclosure not suitable for environment. Replace with correct enclosure construction
	C.)	Incorrect grease or bearings for ambient extremes.	See section 4.2.1
	D.)	VFD bearing damage	Ground brush, common mode filter, or insulated bearings must be added. Contact motor manufacturer.

Motor, at start up, makes a loud rubbing, grinding, or squealing noise.

	A.)	Contact between rotating and stationary components	Belt squeal during across the line starting is normal: (1) Verify that supply voltage is within limits (see section 3.4.1.3). (2) Ensure that motor lead wiring matches nameplate connection diagram: (3) Isolate motor from load. (4) To locate point of contact turn motor shaft by hand. (5) If point of contact is not located contact motor service shop.

Start capacitors repeatedly fail.

	A.)	The motor acceleration time is too long	Motor may be too small for load. Record acceleration time. Start capacitors may fail if acceleration time exceeds 3 seconds.
	B.)	Motor is being started too frequently	Excessive starting will damage motor capacitors. Contact motor manufacturer if motor is started more than 20 times/hour or if acceleration time exceeds 3 seconds.
	C.)	Motor voltage low	Verify that voltage at the motor terminals is within limits (see section 3.4.1.3).
	D.)	Defective start switch inside motor	Motor internal switch failure overheats start capacitor. Contact service shop or motor manufacturer.

Run capacitor fails.

	A.)	High ambient temperature	Verify that the ambient does not exceed motor's nameplate value

	B.)	Input voltage exceeds limit	Verify that voltage to the motor terminals is within limits (see section 3.4.1.3).
	C.)	Power surge to motor (caused by lightning strike or other high transient voltage).	If a common problem, install surge protector.

This Solution is based on the use of EPT COMPONENTS. Substitution of competitive product may result in reduced drive life and/or unsatisfactory performance.

Solution #982558, Selection #4

Solutia - Krummrich AI S.O. # 12936
59 URAI Marathon E983B (30 HP)
1800 RPM to 2695 RPM

Bill of Materials

Qty	Part Number
1	3R5V97
1	R1 1 7/8
1	3B5V64
1	B 1 1/8
3	5VX660

EPT EDGE Browning Drive Technical Specifications

	Required	Actual
Driver Speed:	1800	1800
Driven Speed:	2695	2686/2686
Center Distance:	20.00-24.00 in.	20.22 in.
Input Power:	30.00 HP	30.00 HP
Service Factor:	2.30	2.39
Options Invoked:	Yes	
Tension:	5.71 Lb. should deflect belt 0.32 In.	
Hub Load:	386 Lb. 'running' Hub Load	

7120 Buffington Rd.
Florence, KY 41042
Customer Service: 1-800-354-9825
Technical Questions: 1-800-626-2093

Driver Sheave: 3R5V97

PD (5V)=9.65
OL=3.359375
OD=9.75
F=2.375
L=2.875
P=0.75
C=0.1875
X=2
G=0.9375
E=0.234375
H=5.375
WT=25.1

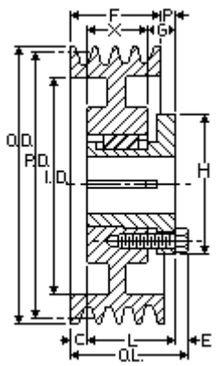

Driver Bushing: R1 1 7/8

Bore (In)=1.875
D (Large End)=4
D (Small End)=3.875
H=5.375
L=2.875
R=0.28125
S=0.234375
T=2.21875
U=0.625
V=4.625
W=0.75
X=1.9375
Y=0.28125
WT=8.7

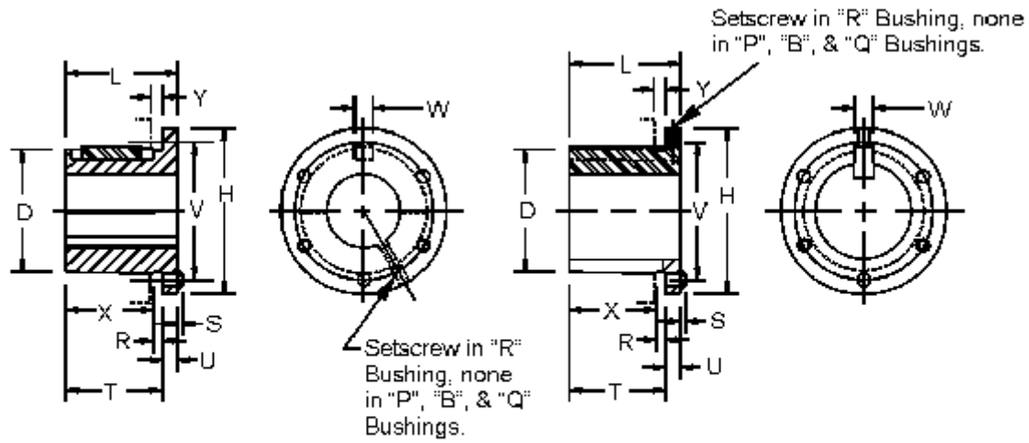

"P", "B", "Q", & "R" BUSHINGS

Type 1 Type 2

Driven Sheave: 3B5V64

PD (5V)=6.5
PD (A)=6.2
DD (A)=6
PD (B)=6.7
DD (B)=6.4
OL=2.90625
OD=6.68
F=2.4375
L=1.9375
P=0.265625
C=0.59375
X=1.25
G=0.859375
E=0.203125
H=3.6875
WT=10.75

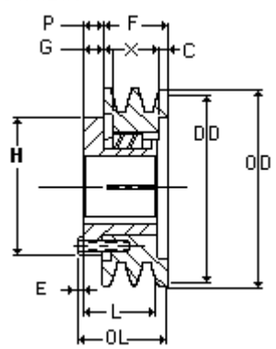

Driven Bushing: B 1 1/8

Bore (In)=1.125
D (Large End)=2.625
D (Small End)=2.5567
H=3.6875
L=1.9375
R=0.34375
S=0.203125
T=1.421875
U=0.5
V=3.125
W=0.5
X=1.078125
Y=0.34375
WT=2.8

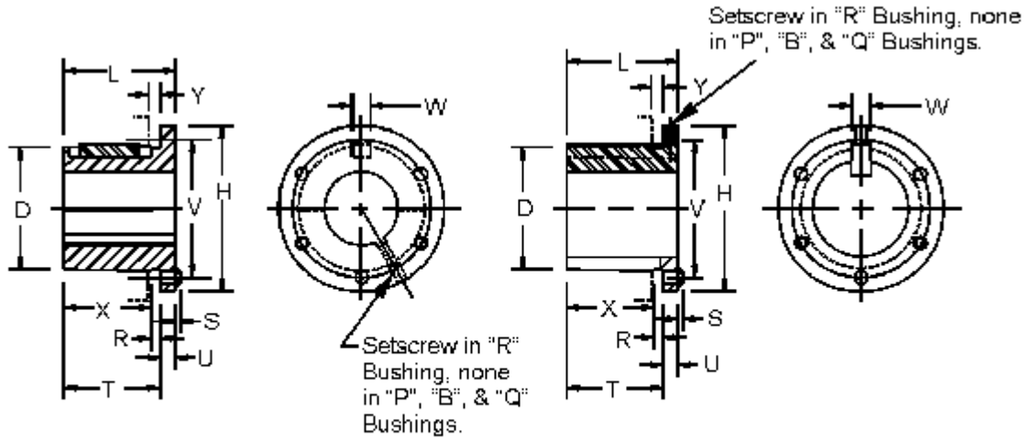

"P", "B", "Q", & "R" BUSHINGS

Type 1 **Type 2**

BROWNING V-Belt Drive Inputs

en español

Description (for your future reference)

Solutia - Krummrich AI S.O. # 12936

59 URAI Marathon E983B (30 HP)

1800 RPM to 2695 RPM

Output Mode ?

Inch Metric

Shaft Parameters

	Driver		Driven	
Shaft Speed	1800	RPM	2695	RPM
Shaft Dia.	1.87500	in. / mm	1.12500	in. / mm
	Frac/Dec		Frac/Dec	

Unit of Measure/Power

Input Power 30.00 HP / kW

Service Factor 2.30

Service Factor Suggestions

Drive Type

Fixed Speed

Variable Speed

Center Distance

Inch mm

Min. 20.00 Max. 24.00

Options

Show Net Price

EPT One Piece

Display Customer Part #'s

Show Sheave Interchanges

Enable Drive Options Drive Options...

This Solution is based on the use of EPT COMPONENTS. Substitution of competitive product may result in reduced drive life and/or unsatisfactory performance.

Prepared by John Dunn, BISCO Environmental on 9/27/2011 (Solution #982558)

No.	Driver Sheave	Driver Bushing	Driven Sheave	Driven Bushing	Belt	Qty	Actual C.D. in.	Actual S.F.	Driven Speed	Cost
1.	3B5V94	B	3B5V64	B	5VX660	3	20.38	2.39	2631/2631	1.014
Correct tension for this drive (5.7 Lb. should deflect belt 0.32 In.) will have 385 Lb. 'running' Hub Load										
2.	4B5V80	B	4B5V54	B	5VX630	4	20.78	2.45	2651/2651	1.171
Correct tension for this drive (4.91 Lb. should deflect belt 0.32 In.) will have 452 Lb. 'running' Hub Load										
3.	4B5V86	B	4B5V56	B	5VX630	4	20.14	2.59	2747/2747	1.198
Correct tension for this drive (4.89 Lb. should deflect belt 0.31 In.) will have 439 Lb. 'running' Hub Load										
4.	3R5V97	R1	3B5V64	B	5VX660	3	20.22	2.39	2686/2686	1.220
Correct tension for this drive (5.71 Lb. should deflect belt 0.32 In.) will have 386 Lb. 'running' Hub Load										
5.	4B5V90	B	4B5V60	B	5VX650	4	20.51	2.90	2685/2685	1.245
Correct tension for this drive (4.84 Lb. should deflect belt 0.32 In.) will have 410 Lb. 'running' Hub Load										
6.	3R5V103	R1	3B5V66	B	5VX670	3	20.16	2.49	2740/2740	1.260
Correct tension for this drive (5.71 Lb. should deflect belt 0.31 In.) will have 376 Lb. 'running' Hub Load										

7.	3R5V103	R1	3B5V68	B	5VX670	3	20.01	2.60	2661/2661	1.266

Correct tension for this drive (5.69 Lb. should deflect belt 0.31 In.) will have 364 Lb. 'running' Hub Load

8.	4B5V94	B	4B5V62	B	5VX650	4	20.03	3.03	2714/2714	1.270

Correct tension for this drive (4.84 Lb. should deflect belt 0.31 In.) will have 399 Lb. 'running' Hub Load

9.	4B5V80	B	4Q5V55	Q1	5VX630	4	20.86	2.37	2700/2700	1.277

Correct tension for this drive (4.93 Lb. should deflect belt 0.33 In.) will have 461 Lb. 'running' Hub Load

10.	6R3V106	R1	6Q3V69	Q1	3VX710	6	21.68	2.64	2765/2765	1.279

Correct tension for this drive (2.62 Lb. should deflect belt 0.34 In.) will have 365 Lb. 'running' Hub Load

*** Belt tension shown is for used belt(s). Multiply the lbs. of force shown x 1.5 for new belt installation.**

Drives above meet your criteria - Selection below is best disregarding options

2B5V136	B	2B5V90	B	5VX780	2	20.98	2.48	2710/2710	1.000

Correct tension for this drive (7.31 Lb. should deflect belt 0.33 In.) will have 281 Lb. 'running' Hub Load

Return To Top

Series D

D33H CHAMBER-ABSORPTION SILENCERS

Application

Blower Discharge Silencer for maximum silencing at blower speeds above transition speed.

Design

A multi-chamber silencer containing a high frequency absorption device in addition to a special arrangement of volumes and air passageways to effectively reduce both pulsation and excessive high frequency through the process of converting noise energy into heat. D33H may be installed horizontally or vertically. Design parameters permit nozzle orientation to suit installation requirements.

Construction

All welded steel sheet and plate construction for long service life. Standard acoustic absorption material temperature limit is 300°F. Exterior surfaces are prime coated. Flanges are drilled to match 125 lb. American Standard Flanges. Inspection openings, mounting brackets, relief valve nozzles or special paint are available at extra charge.

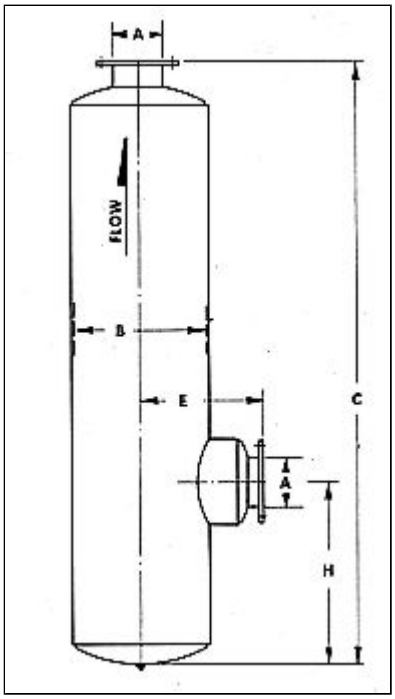

Model	A	B	C	E	H		Wt.
					Min.	Max.	
D33H - 2	2*	8	30	9	6	10	30
D33H - 2 1/2	2 1/2*	10	31	10	7	11	40
D33H - 3	3*	10	49	12	7	11	50
D33H - 4	4**	14	50	14	8	17	120
D33H - 5	5	16	62	15	9	20	165
D33H - 6	6	18	69	17	10	24	215
D33H - 8	8	22	95	26	12	26	715
D33H - 10	10	26	120	34	14	36	958
D33H - 12	12	30	133	40	16	40	1353
D33H - 14	14	36	165	48	17	40	1826
D33H - 16	16	42	179	54	19	44	2906
D33H - 18	18	48	186	60	21	46	4175
D33H - 20	20	48	198	66	22	47	4525
D33H - 22	22	54	211	72	24	48	5337
D33H - 24	24	54	229	72	26	54	6560

* NPT Connections
** Available in NPT or Flange Connections

TYPICAL ATTENUATION CURVE

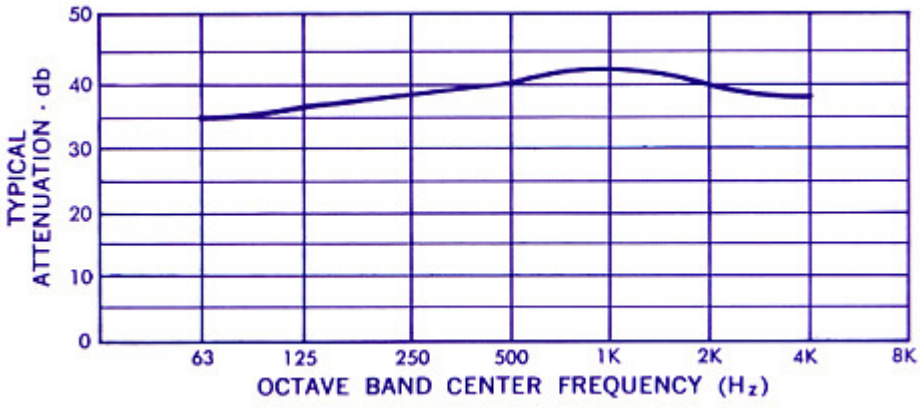

Back

Back to page SERIES D

COMPACT FILTER SILENCERS

"FS" Series 4" - 6" 125/150# Pattern

APPLICATIONS

- Industrial & Severe Duty
- Blowers - Side Channel & PD Type
- Piston Compressors
- Screw Compressors
- Hydraulic Breathers – fine filtration
- Engines
- Fans
- Construction
- Medical
- Pneumatic Conveying
- Waste Water Aeration
- Sparging
- Factory Air

FEATURES & SPECIFICATIONS

- Polyester: 99%+ removal efficiency standard to 5 micron
- Paper: 99%+ removal efficiency standard to 2 micron
- Fully drawn weatherhood - no welds to rust or vibrate apart
- Tubular silencing design - tube is positioned to maximize attenuation and air flow while minimizing pressure drop
- Durable carbon steel construction with baked enamel finish and powder coated weatherhood
- Interchangeable elements: Polyester, Paper
- Low pressure drop center bracket and outlet pipe design
- Temp (continuous): min -15°F (-26°C) max 220°F (104°C)
- Filter change out differential: 10"-15" H_2O Over Initial Delta P
- Pressure drop graphs available upon request

TYPICAL NOISE ATTENUATION – FS SERIES

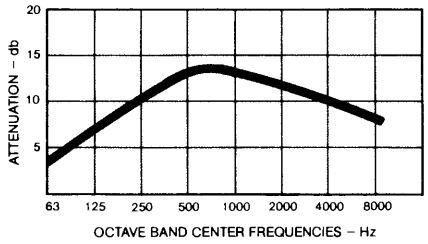

- Noise attenuation may vary due to the wide range of applications and machines

OPTIONS (Inquiries Encouraged)

- Various media available
- 1/8" & 1/4" tap holes
- Pressure Drop Indicator
- Available in ***Stainless Steel***
- Epoxy coated housings
- Hot dipped galvanized housings
- Special connections, NPT

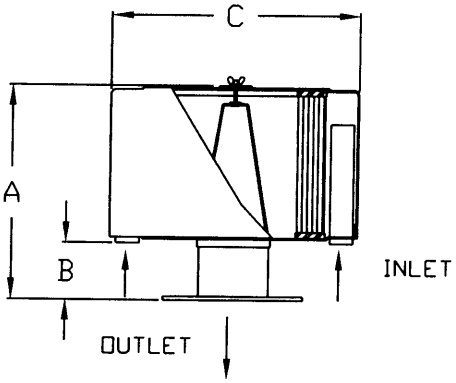

Dimension tolerance ± 1/8"

I = Industrial Duty S = Severe Duty E = Extreme Duty

	with Polyester Element	with Paper Element	MPT Outlet	DIMENSIONS - inches A	B	C	Rated Flow SCFM Piston	Screw, Blower, Fan	Element Rating	No. of Tubes	Approx. Wt. lbs
I	FS-235P-400F	FS-234P-400F	4"	14	4	16	300	520	570	9	33
S	FS-245P-400F	FS-244P-400F	4"	14	4	16	450	520	880	9	35
E	FS-275P-400F	FS-274P-400F	4"	14	4	16	450	520	1100	9	39
I	FS-245P-500F	FS-244P-500F	5"	14	4	16	500	800	880	14	38
S	FS-275P-500F	FS-274P-500F	5"	14	4	16	650	800	1100	14	41
I	FS-275P-600F	FS-274P-600F	6"	16	5 1/4	16	650	1100	1100	18	42

125/150# Pattern Flg	DIMENSIONS - inches O.D.	B.C.	B.H.	No. of Holes	Flange Thickness
4"	9	7 1/2	0.75	8	0.38
5"	10	8 1/2	0.88	8	0.38
6"	11	9 1/2	0.88	8	0.38

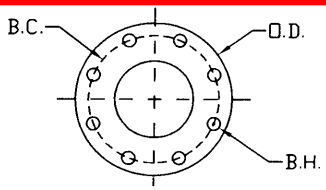

Solberg - Where the Best is in Store for You!

1151 W. Ardmore Ave. • Itasca, IL 60143-1387 • (630) 773-1363 • Fax: (630) 773-0727
E-mail: sales@solbergmfg.com • Web Site: www.solbergmfg.com

SOLBERG

Filter Silencers and Inlet Filters Maintenance Manual

www.solbergmfg.com

Note: Please read the maintenance instructions given by the OEM for the machinery first. The OEM's manual should be adhered to in order to protect the equipment. Solberg Manufacturing, Inc has made every effort to make sure that these instructions are accurate but is not responsible for any typos, slight variations or for human errors that may occur.

Solberg Manufacturing, Inc., 1151 Ardmore Itasca, IL 60143 USA
Ph: 630.773.1363 Fax: 630.773.0727 Email: sales@solbergmfg.com Web: www.solbergmfg.com
Rev: MMIFS-407

Maintenance Manual

Solberg Air Inlet Filters and Filter Silencers

CONTENTS

Section A

Introduction ..... pg. 3

Section B

General Information

1. Identification of Solberg Filters ..... pg. 3
2. Filtration Rules of Thumb ..... pg. 4
3. Element Specifications. ..... pg. 6
4. Element Cleaning ..... pg. 7

Section C

Procedures

1. Installation ..... pg. 7
2. Disconnecting canister top from base ..... pg. 8
3. Removing element for service/maintenance. ..... pg. 8
4. Securing Element ..... pg. 8
5. Securing canister top to canister base. ..... pg. 9

Section D

Maintenance Recommendations

1. General ..... pg. 9
2. Spare Parts List ..... pg. 10

**For Further Information Please Call: 630-773-1363*

Solberg Manufacturing, Inc., 1151 Ardmore Itasca, IL 60143 USA
Ph: 630.773.1363 Fax: 630.773.0727 Email: sales@solbergmfg.com Web: www.solbergmfg.com

Rev: MMIFS-407

SOLBERG

Section A

INTRODUCTION

The purpose of this manual is instruction on the proper assembly and care of Solberg inlet air filters.

WARNING

This manual must be read and thoroughly understood before using and caring for this air filter. Failure to comply could result in explosion, product/system contamination or personal injury.

This manual should be used as a supplement to the user's understanding of the proper care needed to maintain a safe and dependable air filter. It is the responsibility of the user to interpret and explain all instructions to persons who do not read or understand English BEFORE they are allowed to maintain and use this filter.

This manual should be readily available to all operators responsible for operation and maintenance of the inlet air filters.

We thank you for selecting products from Solberg Manufacturing, Inc. We are confident that our superior filter designs will meet your application requirements.

Section B

GENERAL INFORMATION

1. Identification of Solberg Inlet Air Filters.

All Solberg inlet air filters should have an identification label/nameplate that gives the following information:

Assembly Model #
Replacement Element #

(The exception is OEM supplied units. In this case, please enter the OEM part numbers below.)

Solberg Manufacturing, Inc., 1151 Ardmore Itasca, IL 60143 USA
Ph: 630.773.1363 Fax: 630.773.0727 Email: sales@solbergmfg.com Web: www.solbergmfg.com

Fill in the actual nameplate data from your new Solberg inlet filter(s):

No.	Filter Model Number	Replacement Element	Initial Delta P Readings
1			
2			
3			
4			
5			

Table 1

The model number designates the filter type, the original element configuration and housing connection size. For example, the following part number identifies the filter as being a 'FS' design filter with a 235 element with prefilter and 3" MPT connection size:

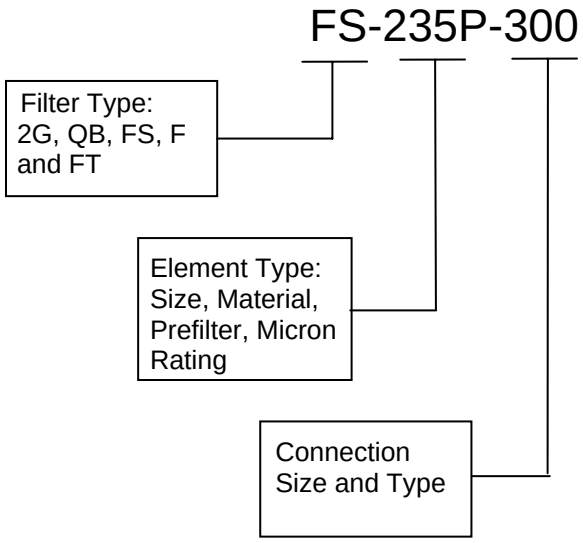

2. Filtration Rules of Thumb

General: For peak output performance from a compressor, blower, vacuum pump, engine, or any other machine that consumes air, one must have clean, unrestricted air. Proper filtration can help stabilize the working environment within rotating equipment even when the external conditions may be quite severe. A critical component in creating the right working conditions is filter sizing. With the properly sized filter, equipment will run smoothly over its entire expected operating life.

A major factor in filtration and filter sizing is air velocity through the filter media. Generally, the slower the velocity of air through a media the higher the filter

Solberg Manufacturing, Inc., 1151 Ardmore Itasca, IL 60143 USA
Ph: 630.773.1363 Fax: 630.773.0727 Email: sales@solbergmfg.com Web: www.solbergmfg.com

efficiency and, conversely, the lower the pressure drop. Therefore, the primary goal in filter sizing is to optimize the velocity of air through the media (sometimes called face velocity).

Rule of Thumb #1: Always begin with the filter cartridge requirements when sizing a filter. Once the appropriate element has been selected then move on to the housing requirements.

Rule of Thumb #2: Always ask or specify a filter based on a micron rating ***with filtration efficiencies***. As an example, stating a requirement for a 1-micron filter is misleading because no efficiency rating has been specified. A 1-micron filter at 95% efficiency may be less efficient than a 5-micron filter at 99% efficiency. For proper air system performance in light and industrial duty environments, a filter with a minimum of 99% filtration efficiency at 5 microns is required.

Rule of Thumb #3: Size your filter correctly by understanding the impact air velocity through a media has on efficiency and pressure drop. Maintain the suggested Air-to-Media ratios listed below based on the external environment listings and Filtration efficiency needs.

Filtration Efficiency Requirements (99%+ efficiency)	**Environmental Conditions**	**Air to Media Ratio**	
Industrial Grade 2-micron **Paper**	Industrial Duty (clean, office/warehouse-like)	30 CFM/ft^2	(51m^3/h)/cm^2
	Severe Duty (workshop, factory-like)	15 CFM/ft^2	(25.5m^3/h)/cm^2
	Extreme Duty (Foundry, Construction-like)	10 CFM/ft^2	(17m^3/h)/cm^2
Industrial Grade 5-micron **Polyester**	Industrial Duty (clean, office/warehouse-like)	50 CFM/ft^2	(85m^3/h)/cm^2
	Severe Duty (workshop, factory-like)	40 CFM/ft^2	(68m^3/h)/cm^2
	Extreme Duty (Foundry, Construction-like)	25 CFM/ft^2	(42.5m^3/h)/cm^2
Industrial Grade 1-micron **Polyester**	Severe Duty (Foundry, Construction-like)	10 CFM/ft^2	(17m^3/h)/cm^2
Industrial Grade 0.3-micron **HEPA** Glass @ 99.97% Efficiency	Industrial Duty (Pre-filtered Applications)	10 CFM/ft^2	(17m^3/h)/cm^2
	Severe Duty (workshop, factory-like)	7 CFM/ft^2	(12m^3/h)/cm^2
	Extreme Duty (Foundry, Construction-like)	5 CFM/ft^2	(8.5m^3/h)/cm^2

Table 2

Rule of Thumb #4: Pressure drop is also caused by the dirt holding capacity of the element. As the element fills up with dirt, the pressure drop increases. It is important to document the pressure drop across a given filter when it is new and then clean or replace it when the pressure drop increases by 10” to 15” / 250-280mm H_2O over the original reading.

Rule of Thumb #5: The inlet connection greatly influences the overall pressure drop of the filter system. To minimize the restriction contributed by an inlet filter, a velocity of 6,000 ft/min (10200m^3/h) or less is suggested through the outlet pipe. The table below lists the suggested flows based on pipe size:

Pipe Size (inches)	Max Airflow		Pipe Size (inches)	Max Airflow		Pipe Size (inches)	Airflow	
1/4"	6 CFM	10m^3/h	1 ¼"	60 CFM	102m^3/h	6"	1,100 CFM	1870m^3/h
3/8"	8 CFM	14m^3/h	1 ½"	80 CFM	136m^3/h	8"	1,800 CFM	3060m^3/h
1/2"	10 CFM	17m^3/h	2"	135 CFM	230m^3/h	10"	3,300 CFM	5610m^3/h
3/4"	20 CFM	34m^3/h	2 ½"	195 CFM	332m^3/h	12"	4,700 CFM	7990m^3/h
1"	35 CFM	60m^3/h	3"	300 CFM	510m^3/h	14"	6,000 CFM	10200m^3/h
			4"	520 CFM	884m^3/h			
			5"	800 CFM	1360m^3/h			

Table 3 **Note: This information is for general use only. A qualified engineer must properly design each system.*

3. Element Specifications

Temperature Range: -15° to 220°F / -26° to 105°C
Filter Change-Out Differential: 10” to 15” / 250-380mm H_2O Over Initial Delta P

Media	Micron Rating
Standard Paper	99+% @ 2 micron
Standard Polyester	99+% @ 5 micron
“S” Series Wire Mesh	Epoxy Coated Wire Mesh
“Z” Series Polyester	99+% @ 1 micron
“HE” Series HEPA	99.97% @ 0.3 microns
“U” Series Polyester	99+% @ 25 micron
“W” Series Polyester	99+% @ 100 micron
“S2” Series	Stainless Steel Wire Mesh
“AC” & “ACP” Series	N/A
“Y” Series Polypropylene	99+% @ 5 micron

Table 4

Solberg Manufacturing, Inc., 1151 Ardmore Itasca, IL 60143 USA
Ph: 630.773.1363 Fax: 630.773.0727 Email: sales@solbergmfg.com Web: www.solbergmfg.com

Temperature Range: -15° to 385°F / -26° to 196°C
Filter Change-Out Differential**:** 10” to 15”/ 250-380mm H_2O Over Initial Delta P

Media	Micron Rating
“MX” & “MXD” Series – Nomex Cloth	99+% @ 5 micron

Table 5

4. Element Cleaning

Some types of Solberg inlet filter elements can be cleaned and reused. However, damage can occur to an element during cleaning so it is imperative that care is taken during disassembly, cleaning and re-assembly. Damaged elements can allow particulate bypass which will damage rotating equipment.

A. ***Polyester Element***: The polyester element may be washed in warm soapy water, vacuumed, gently blown out or replaced. The element should be dry before reinstallation.
B. ***Paper Element***: The paper element may be lightly blown with low pressure air. It is disposable and in most cases should be replaced with a new element.
C. ***Polyurethane Prefilter***: The prefilter may be washed as a sponge or replaced to give the element a longer service life.
D. ***Epoxy Coated Wire Mesh and Stainless Steel Wire Mesh Element***: Cleaning instructions similar to polyester, except mild solvents may be used.
E. ***Activated Carbon Element***: Not cleanable
F. ***Polypropylene Element***: Cleaning instructions similar to polyester
G. ***Nomex Cloth Element***: Cleaning instructions similar to polyester

If you are not confident that the integrity of the element was maintained during cleaning, it is recommended that a new element be installed. Also, spare parts such as gaskets, wingnuts and washers can be supplied upon request.

Section C

PROCEDURES

1. Installation.

A. Maximum operating temperature for most Solberg inlet air filter products is 220°F / 105°C. Temperatures in excess of this could cause damage to elements, media and elastomers. High temperature products are available.

B. Direction of flow is typically from the outside of the element to the inside of the element. Most products have arrows indicating direction of flow on the inlet and outlet ports.

C. Ensure that pipe/flange connections are adequately sealed so the potential for leaks is reduced to a minimum.

2. Disconnecting canister top from canister base.

A. FS-04-06-10 *(or 05-07-11):* Twist top housing to open. Use care to support bottom housing while removing top housing. Fitting damage can occur if fitting is torqued in the wrong direction.

B. Small QB/FS/F/FT*:* Remove weather hood or top plate by loosening hex nut or wing nut and lifting off.

C. Large 2Q/QB/FS/F/FT: Remove cover by loosening hex nut or wing nut and lifting off.

3. Removing element for service/maintenance.

A. Carefully remove retaining hex head/wing-nut and washer over top plate, and then remove element. Note: Model “04-06-10” elements should be free when housing tops are removed.

B. Clean sealing surfaces of housing, top plates and element endcaps so that they are free of dirt or any other particulate.

WARNING

Failure to comply with these instructions may result in system or equipment contamination.

4. Securing Element.

A. Place new or cleaned element evenly on base plate. Be sure element seats properly on base and there is no dirt or particulate present on sealing surfaces. With multiple element stacks place elements in line with base element and ensure elements seat properly.

Solberg Manufacturing, Inc., 1151 Ardmore Itasca, IL 60143 USA
Ph: 630.773.1363 Fax: 630.773.0727 Email: sales@solbergmfg.com Web: www.solbergmfg.com

B. Place top plate (if necessary) on element by centering on tap bolt.

C. Secure washer and wing nut to end cap (or top plate) and tap bolt. Element must be tightly secured. Note: Do NOT over tighten!

WARNING

Defective installation may cause system or pump contamination. Use only genuine Solberg replacement parts.

5. Securing canister top to canister base.

A. Make sure all surfaces are free from dust and other particulate.

B. Small QB/FS/F/FT: Replace top plate and/or weather hood if necessary. Feed threaded rod into corresponding bolthole and tighten. Note: Do NOT over tighten!

C. Large 2G/QB/FS/F/FT: Replace cover. Feed threaded rod into corresponding bolt hole(s) and tighten. Note: Do NOT over tighten!

D. FS-04-06-10 (or 05-07-11): Reassemble top housing to bottom housing by aligning tabs and turning into place.

Section D

MAINTENANCE RECOMMENDATIONS

1. Pressure drop readings are recommended to have an effective air filter. Always document initial pressure drop during start-up when element is clean. Replacement cartridge is needed when system experiences 10” to 15” / 250-380mm H^2O above drop above the initial reading. Refer to page 4 for initial values.

2. Always check replacement cartridge gaskets to insure they are adhered uniformly along the end caps during handling. If not, contact Solberg Manufacturing, Inc. immediately. Do not modify or change!

Solberg Manufacturing, Inc., 1151 Ardmore Itasca, IL 60143 USA
Ph: 630.773.1363 Fax: 630.773.0727 Email: sales@solbergmfg.com Web: www.solbergmfg.com

3. Always check inlets/outlets, element base and its components when replacing element to insure cleanliness. Wipe clean if necessary.

4. Operate only when a proper seal exists.

SPARE PARTS LIST:

2G/QB/FS Series

Parent Model 2G/QB-Element-Connection	Prefilter Model	Housing Weatherhood/Top for FS Series Model No.	Housing Weatherhood/Top for 2G/QB Series Model No.	Element Top Plate Model No.	Wingnut(s)/ Lock Hex Nut(s) Model No.	Washer(s) Model No.
Model-15/14-xxx	PF14	WH6X2	N/A	N/A	WN25X20	WR25X20
Model-19/18-xxx	PF18	WH6X5	QB6X5	N/A	WN25X20	WR25X20
Model-31/30-xxx	PF30	WH10X5	QB10X5	N/A	WN25X20	WR25X20
Model-231/230-xxx	PF230	WH10X10	QB10X10	N/A	WN38X16	WR38X16
Model-235/234-xxx	PF234	WH16X10	QB16X10	N/A	WN38X16	WR38X16
Model-245/244-xxx	PF244	WH16X10	QB16X10	N/A	WN38X16	WR38X16
Model-275/274-xxx	PF274	WH16X10	QB16X10	N/A	WN38X16	WR38X16
Model-375/374-xxx	PF374	T16000625	T16000625	T12000625	LHN50X13	WR50X13
Model-377/376-xxx	PF376	T22000625	T22000625	T14750625	LHN50X13	WR50X13
Model-385/384-xxx	PF384	T28000625	T28000625	T19750625	LHN50X13	WR50X13
Model-384(2)-xxx	PF384(2)	T28000625	T28000625	T19750625	LHN50X13	WR50X13
Model-485/484-xxx	PF484	T28000625	T28000625	T19750625	LHN50X13	WR50X13
Model-485(2)/484(2)-xxx	PF484(2)	T28000625	T28000625	T19750625	LHN50X13	WR50X13
Model-685-xxx	PF684	T28000625	T28000625	T19750625	LHN50X13	WR50X13

F/FT Series

Parent Model F/FT-Element-Connection	Prefilter Model	Weatherhood/Top for F Series Model No.	Element Top for F Series Model No.	Top for FT Series Model No.	Wingnut(s)/ Lock Hex Nut(s) Model No.	Washer(s) Model No.
Model-15/14-xxx	PF14	WH6X2	N/A	T4500312	WN25X20	WR25X20
Model-19/18-xxx	PF18	WH6X5	N/A	T4500312	WN25X20	WR25X20
Model-31/30-xxx	PF30	WH7.625X5	N/A	T6000312	WN25X20	WR25X20
Model-231/230-xxx	PF230	WH10X10	N/A	T6000312	WN38X16	WR38X16
Model-235/234-xxx	PF234	WH10X10	N/A	T8000437	WN38X16	WR38X16
Model-245/244-xxx	PF244	WH16X10	N/A	T1000437	WN38X16	WR38X16
Model-275/274-xxx	PF274	WH16X10	N/A	T12000437	WN38X16	WR38X16
Model-375/374-xxx	PF374	WH16X16	N/A	T12000625	LHN50X13	WR50X13
Model-377/376-xxx	PF376	WH22.5X15	N/A	T14750625	LHN50X13	WR50X13
Model-385/384-xxx	PF384	WH28X15	N/A	T19750625	LHN50X13	WR50X13
Model-384(2)-xxx	PF384(2)	T28000625	T19750625	T19750625	LHN50X13	WR50X13
Model-485/484-xxx	PF484	WH28X24	N/A	T19750625	LHN50X13	WR50X13
Model-485(2)/484(2)-xxx	PF484(2)	T28000625	T19750625	T19750625	LHN50X13	WR50X13
Model-685-xxx	PF684	T28000625	T19750625	T19750625	LHN50X13	WR50X13

*Note: Spare parts are for standard products. See page 4 for replacement element.

Solberg Manufacturing, Inc., 1151 Ardmore Itasca, IL 60143 USA
Ph: 630.773.1363 Fax: 630.773.0727 Email: sales@solbergmfg.com Web: www.solbergmfg.com

Models ~~215V and~~ 337

Model 215V is Non-code Vacuum and Model 337 is ASME Section VIII, Air/Gas Vacuum, 'UV' National Board Certified, Safety Valves

KUNKLE

Features

- **Large nozzle design** provides high capacity.
- **Flat bronze valve seats are lapped** for optimum performance.
- **Warn ring offers easy adjustability** for precise opening with minimum pre-open or simmer and exact blowdown control.
- **Pivot between disc and spring** corrects misalignment and compensates for spring side thrust.

Model Descriptions

- **Model 337 has 'pull-ring' lift device** for easy manual testing.
- **Every valve is 100% tested/inspected** for pressure setting, blowdown and leakage.
- **All adjustments are factory sealed** to prevent tampering or disassembly.

Option

- SS trim. (nozzle and disc) (Variation 03)

Applications

- Protection of low to medium pressure high volume blowers, compressors and pneumatic conveying systems.
- Bulk hauling trailers/equipment.
- Light gauge tanks.
- Protection of high volume vacuum pumps and conveying systems.

Vacuum Limits

Model 215V:
2-inch HG
to 29-inch HG
[67.7 to 982 mbarg]
-20° to 406°F [-29° to 208°C]

Pressure and Temperature Limits

Model 337:
1 to 60 psig [0.07 to 4.1 barg]
-20° to 406°F [-29° to 208°C]

Tyco reserves the right to change product design and specifications without notice. Copyright © 2002 by Tyco International Ltd.

KUKMC-0383-US-0207

Models ~~215V and~~ 337

Parts and Materials

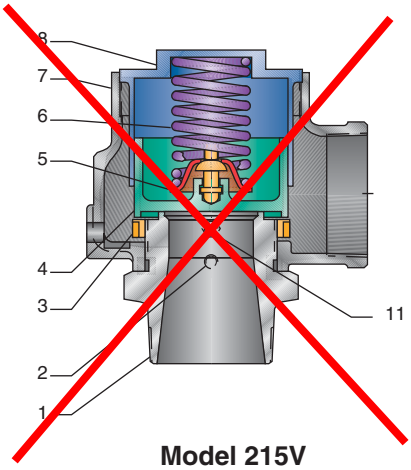

Model 215V

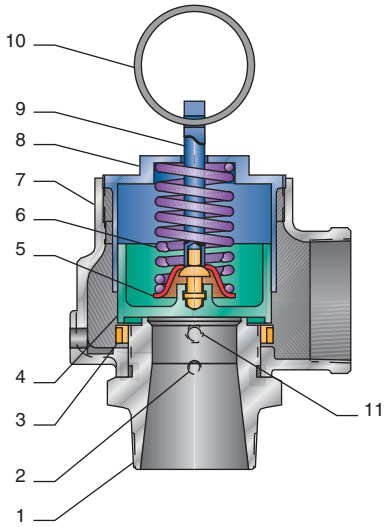

Model 337

Models 215V and 337			
No.	**Part Name**	**215V**	**337**
1	Nozzle[1]	Bronze, SB62	Bronze, SB62
2	Set Screw	Steel A108-1018 Brass Plated	Steel A108-1018 Brass Plated
3	Regulator Ring	Bronze B584 Alloy 84400	Bronze B584-C84400
4	Disc[1]	Bronze B584 Alloy 84400	Bronze B584-C84400
5	Spring Step	Steel A-109 Coated[3]	Steel A109 Coated[3]
6	Spring	SS, A313 Type 302	SS A313-302
7	Body	Cast Iron, Zinc Plated, B633	Iron A-126, CL A or B
8	Compression Screw	Bronze, B-584 Alloy 84400	Bronze, B584-C84400
9	Stem[2]	N/A	Brass B16
10	Lift Ring[2]	N/A	SS A313-302
11	Regulator Ring Set Screw	N/A	Brass B16

Notes

1. Disc and nozzle available in SSA-479 TY 316.
2. Stem and lift ring available on Model 337 only.
3. Corrosion preventative coating.

Specifications

Size Inlet and Outlet	Dimensions, in [mm] A	B	C 215V	C 337	Weight lb [kg]
2” [50.8 mm]	3 1/4 [82.5]	3 [76.2]	6 1/2 [165.1]	7 [177.8]	8 [3.6]
~~2 1/2” [63.5 mm]~~	~~3 3/4 [95.2]~~	~~3 1/2 [88.9]~~	~~7 5/8 [194.6]~~	~~8 [203.2]~~	~~12 [5.4]~~
3” [76.2 mm]	4 1/4 [107.9]	4 [101.6]	~~8 1/2 [215.9]~~	9 [228.6]	20 [4.1]

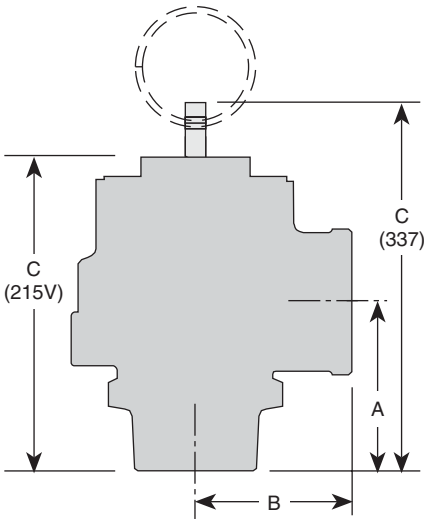

Model 337

Tyco reserves the right to change product design and specifications without notice. Copyright © 2002 by Tyco International Ltd.

Models ~~215V and~~ 337

Model 215V

Non-code Vacuum Air (SCFM) - Flow Coefficient

Relief Set (in, HG)	Valve Inlet and Outlet Size 2" Orifice Area, in² 1.84	2½" Orifice Area, in² 2.79	3" Orifice Area, in² 4.04
2	229	347	503
5	338	512	742
10	415	630	912
15	426	646	936
20	426	646	936

Non-code Vacuum Air [Metric, Nm³/h]

Relief Set [mbarg]	Valve Inlet and Outlet Size 5.08 cm Orifice Area [11.86 cm²]	6.35 cm Orifice Area [17.97 cm²]	7.62 cm Orifice Area [26.05 cm²]
50	328	498	722
100	450	682	988
150	533	807	1170
200	593	899	1303
250	638	966	1400
300	669	1014	1470
350	690	1046	1516
400	701	1062	1540
450	704	1067	1546
500	704	1067	1546
550	704	1067	1546
600	704	1067	1546
650	704	1067	1546
700	704	1067	1546
750	704	1067	1546

Model 337

Non-code[1] and ASME Section VIII Air (English, SCFM)

Set Pressure (psig)	Valve Inlet and Outlet Size 2"	2½"	3"
1	240	364	527
5	551	805	1166
10	741	1124	1628
15	948	1436	2081
20	1092	1656	2399
25	1237	1875	2718
30	1382	2095	3036
35	1542	2337	3386
40	1701	2578	3736
45	1860	2820	4086
50	2020	3061	4436
55	2179	3303	4786
60	2338	3544	5136

Note

1. No code stamp or 'NB' on nameplate below 15 psig set.

Non-code[1] and ASME Section VIII Air [Metric, Nm³/h]

Set Pressure [barg]	Valve Inlet and Outlet Size 50 mm	63 mm	80 mm
0.5	1049	1589	2303
1.0	1457	2208	3200
1.5	1888	2861	4147
2.0	2235	3387	4910
2.5	2613	3959	5739
3.0	2995	4538	6579
3.5	3377	5117	7418
4.0	3760	5696	8258

Note

1. No code stamp or 'NB' on nameplate below 1.1 barg set.

Tyco reserves the right to change product design and specifications without notice. Copyright © 2002 by Tyco International Ltd.

Models 215V and 337

Model Number/Order Guide

Model No: 0337-K01ANE0008

Model Number Position	1	2	3	4	5	6	7	8	9	10	11	12	13	14	15
Example	2	1	5	V	—	H	0	1	A	Q	E	0	0	5	0

Model

~~215V~~
0337

Inlet Size

H - 2-inch [50.8 mm]
~~J - 2½-inch [63.5 mm]~~
K - 3-inch [76.2 mm]

Variation (01 through 99)

01 - Bronze Disc and Nozzle
~~02 - SS Disc and Nozzle~~
60 - BSP Connections

Design Revision

Indicates non-interchangeable revision. Current Design is at Revision 'A'

Valve Service

K - Air ASME Section VIII (Model 337 only)
~~Q - Vacuum (Model 215V only)~~
N - Non-code Air/Gas (Model 337 only)

Spring Material

E - SS Type 316
~~M - SS (26 psi thru 60 psi set) Type 17-7~~

Set Pressure

Model 337, 1 psig [0.7 barg] (0001) through 60 psig [4.1 barg] (0060)
~~Model 215V, 2-inch HG [68 mbarg] (0002) through 29-inch HG [982 mbarg] (0029) vacuum~~

Facility Phone: 828-669-3700

tyco / Valves & Controls

www.kunklevalve.com

The data presented in this bulletin is for general information only. Manufacturer is not responsible for acceptability of these products in relation to system requirements. Patents and Patents Pending in U.S. and foreign countries. All rights reserved. Printed in U.S.A. Tyco reserves the right to change product design and specifications without notice. © Copyright 2002.

KUNKLE PRESSURE RELIEF VALVES

Installation and Operating Instructions

Pre-Installation Handling

This pressure relief valve is designed to protect equipment from overpressure. The valve should be handled with care, not subjected to heavy shock loads, and protected to prevent contamination from getting inside. It should be installed correctly per A.S.M.E. Boiler & Pressure Vessel Code requirements. Failure to do so could result in property damage or serious injury to personnel. When hoisting the valve into position for installation, care should be exercised so that lifting straps do not contact the valve lift lever.

Installation

Always wear proper safety equipment, including safety glasses and ear protection.

1. Mount the valve in a vertical position so that the valve body is self-draining. If a body drain port is provided, make sure it is open when required by the ASME code. Do not plug any bonnet vent openings. The inlet piping should be as short as possible, with no elbows, and equal to or greater than the size of the pressure relief valve inlet connection. This will help to limit the inlet pressure drop to 3% or less when the valve is relieving.

2. When discharge piping is connected to valve outlet, make sure it is self draining if a body drain port is not used. The valve should not be connected to any discharge pipe that contains pressure before the valve opens or to any pipe where the pressure build-up is greater than 10% of the set pressure when the valve is open and relieving.

   Discharge piping, other than a short tailpipe, must be supported. For steam service, a drip pan elbow or flexible connection between the valve and the pipe should be used to prevent excessive pipe stress, due to thermal expansion, from being imposed on the valve body.

3. For threaded valves, to prevent sealing compound from entering and damaging the valve, apply a small amount of pipe thread sealing compound to external threads only. Do not put any sealing compound on the first thread or on any internal threads. To do so may cause the sealing compound to enter the valve and cause seat leakage.

   Do not use the valve body or bonnet for installing the valve in threaded connections. Use the wrench flats provided to tighten the valve to the connecting pipe, and do not overtighten. To do so may cause valve leakage.

4. For flanged valves, use new gaskets and tighten the mounting studs evenly.

Operation

1. Maintain a system operating pressure at least 5 psig or 10% below the set pressure of the valve, whichever is greater. Operating too close to the valve set pressure will cause seat leakage and will shorten the time between valve maintenance.

2. Do not use the safety valve as a control valve to regulate system operating pressure. Excessive operation will cause the seat to leak and will require more frequent valve maintenance.

3. ASME Section I and VIII valves equipped with lift levers are designed to be operated only when the system pressure is 75% of set pressure or greater. ASME Section IV valves may be operated at any set pressure. When hand operating the valve, hold it open long enough to purge any foreign matter from the seat area. If a cable or wire is attached to the lift lever for remote actuation, make sure the direction of pull is the same as it would be if the lever were pulled directly by hand.

Maintenance

Maintenance should be performed on a regular basis. An initial inspection interval of 12 months is recommended. Depending on the service conditions and the condition of the valve, the inspection interval may be decreased or increased. Use only Kunkle parts for repair. Depending on the local jurisdictional requirements where the valve is installed, repairs may have to be made by a repair facility holding a VR stamp.

WARNING!

Removal of the seal wires or any attempt to adjust, repair or modify this product by non-qualified or non-authorized persons voids the product guarantee and may cause serious damage to equipment, personal injury, and death. Kunkle Valve is not liable for any damage resulting from misuse or misapplication of its products.

Kunkle Valve Division

Phone: 828-669-5515 953 Old US 70, Black Mountain, NC 28711 Fax: 828-669-4017

Rev B 01/14/2002

US Valve

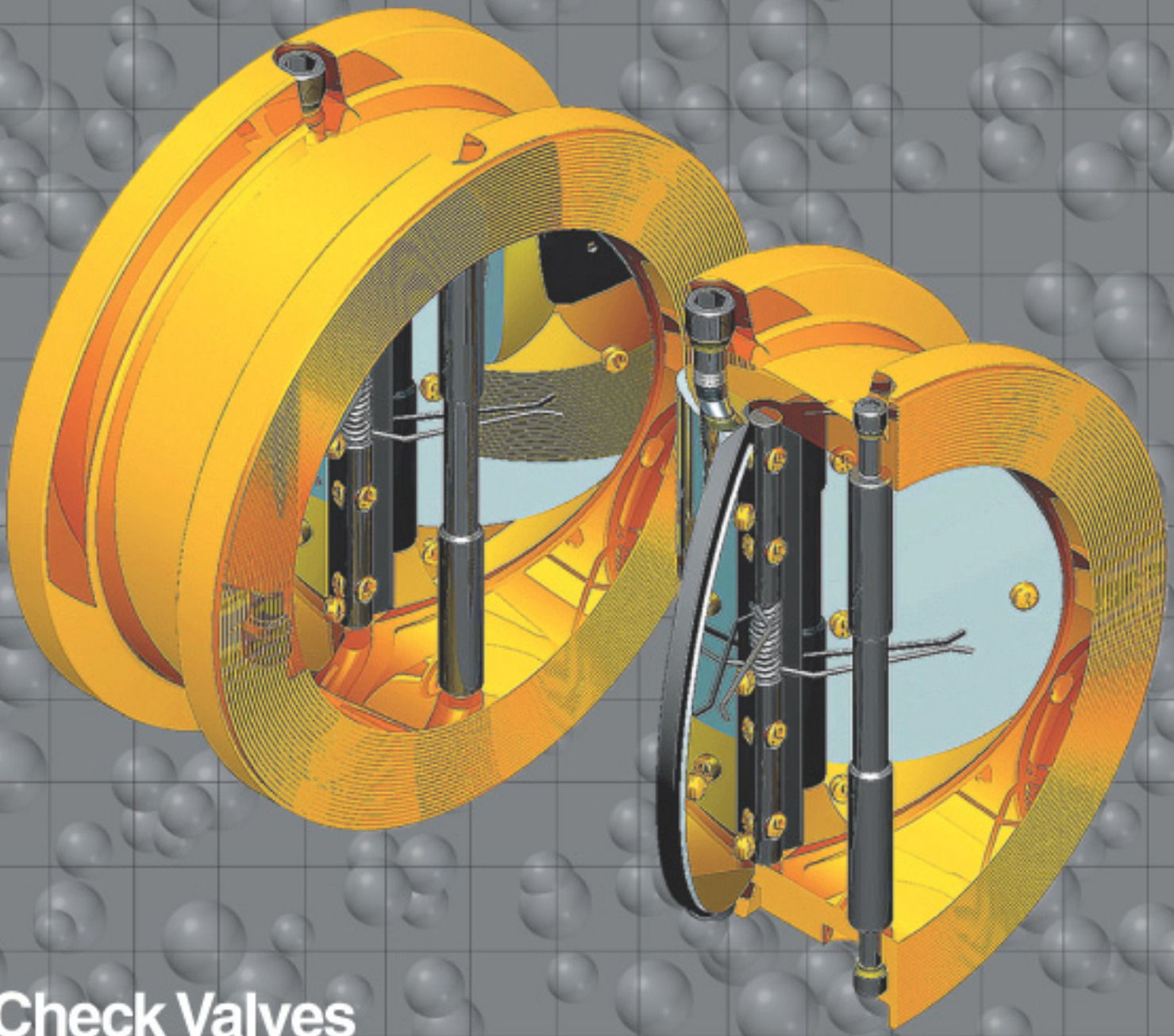

Check Valves

Wafer

Made in the USA

Patent Pending

U.S. Valve

We make high-performance check valves that will double your Cv.[1] If you are looking for the lowest possible pressure loss then our resilient hinged double disc valves are what you need.

Durable

Our unique, air-foil designed wing support conditions the flow profile, resulting in a more laminar, less turbulent flow, thus extending the life of the valve. Our valves consistently out-perform all other products on the market today.

Low Maintenance

A protective coating secures our valves against normal atmospheric corrosion and enhances appearance, making priming and painting unecessary.

Reliable

Each of our valves is individually inspected and tested to ensure performance. Most manufacturers will check only random valves. **We test every, single one.**

Highest Quality

Our designs specify the finest materials engineered specifically for each application. We manufacture all our valves with forged wing supports for superior strength against linear loads, and all wing pins and fasteners are made of 316 stainless steel.

Manufactured by U.S. Valve

Every component is manufactured entirely by U.S. Valve. We control the quality, we control delivery and we keep our prices down.

In Stock

We stock a vast inventory of valves, so most sizes and materials can ship the same day.

[1]The Cv of our high-performance check valves is almost twice that of conventional, metallic-hinge, double door check valves for sizes 2" through 4" and approximately 25% more for sizes 16" through 24".

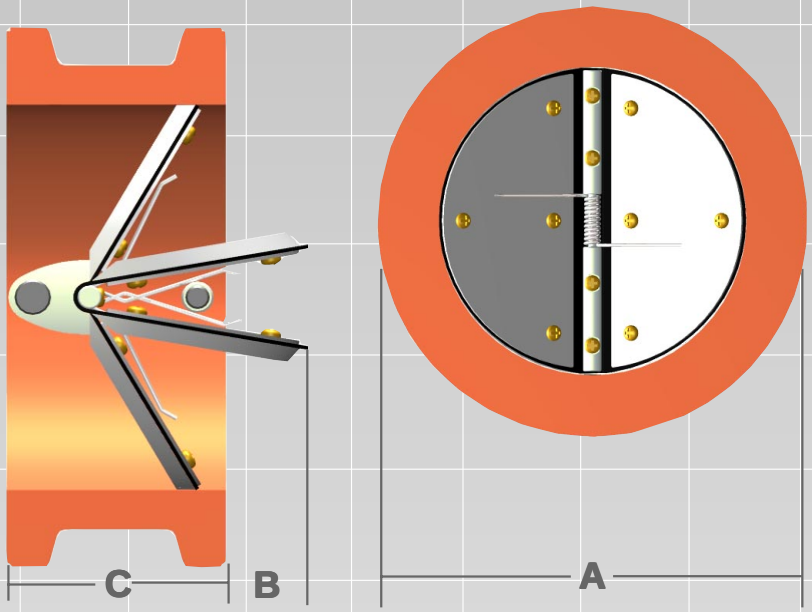

Standard Wafer Models and Materials*

Model	Body	Discs	Wing Support	M.O.P.#
09-0-0	Aluminum ASTM B26 319 or 355 (Solid Body)	Aluminum ASTM B209 6061T6	Forged Aluminum 6061	50 PSI
09-1-0	Carbon Steel ASTM A216Gr.WBC (Solid Body)	Aluminum ASTM B209 6061T6	Forged Aluminum 6061	150 PSI
09-1-4	Carbon Steel ASTM A216Gr.WBC (Solid Body)	Stainless Steel ASTM A240 316	Forged Stainless Steel 316	150 PSI
09-2-0	Cast Iron ASTM 126 Gr.B	Aluminum ASTM B209 6061T6	Forged Aluminum 6061	125 PSI
09-2-3	Cast Iron ASTM 126 Gr.B	Brass ASTM B36 C260	Forged Brass ASTM B124 C377	125 PSI
09-2-4	Cast Iron ASTM 126 Gr.B	Stainless Steel ASTM A240 316	Forged Stainless Steel 316	125 PSI
09-3-3	Brass ASTM B62 Alloy C836 (Solid Body)	Brass ASTM B36 C260	Forged Brass ASTM B124 C377	150 PSI
09-4-4	Stainless Steel Gr. 316 (Solid Body)	Stainless Steel ASTM A240 316	Forged Stainless Steel 316	150 PSI

*All fasteners and spring pins are 316 stainless steel. BUNA-N is standard seal in all valves. Optional seal materials: EPDM, SILICONE, VITON. 316 stainless steel springs are optional for all models. Consult factory for any other special material requirements.

#Max Operating Pressure at 60°F.

Dimensional Data: (inches)

Valve size	A	B	C*
1 1/2	3.3	0.3	1.4
2	4.1	0.5	1.6
2 1/2	4.7	0.6	1.6
3	5.3	0.7	2.3
4	6.7	0.9	2.4
5	7.7	1.1	2.7
6	8.7	1.5	3.4
8	11.0	2.3	4.2
10	13.3	2.5	5.4
12	16.1	3.0	6.4
14	17.7	3.3	7.4
16	20.2	3.8	8.4
18	21.6	4.3	9.4
20	23.7	4.8	10.4
24	28.2	5.8	12.4

Consult factory for larger sizes.

* All "C" dimensions ±.060"

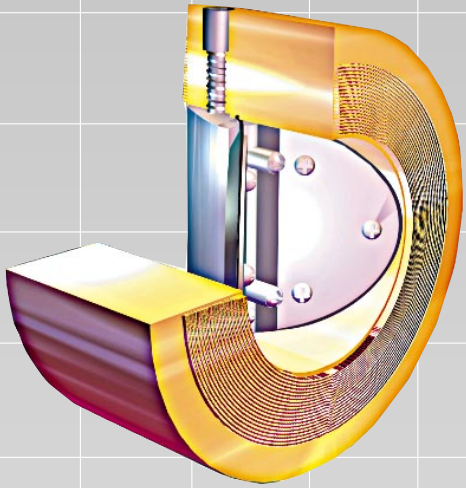

Solid Body Wafer.
(H-Body shown on cover.)

Parts and Description:

Item	Description
1	Body
2	Disc
3	Disc Backup
4	Wing Support
5	Wing Pin
6	Seal
7	Sealing Washer
8	Wing Support Screw
9	Disc Assembly Screw
10	Wing Assembly Screw
11	Spring (Optional)
12	Limiter (5" valves & larger)

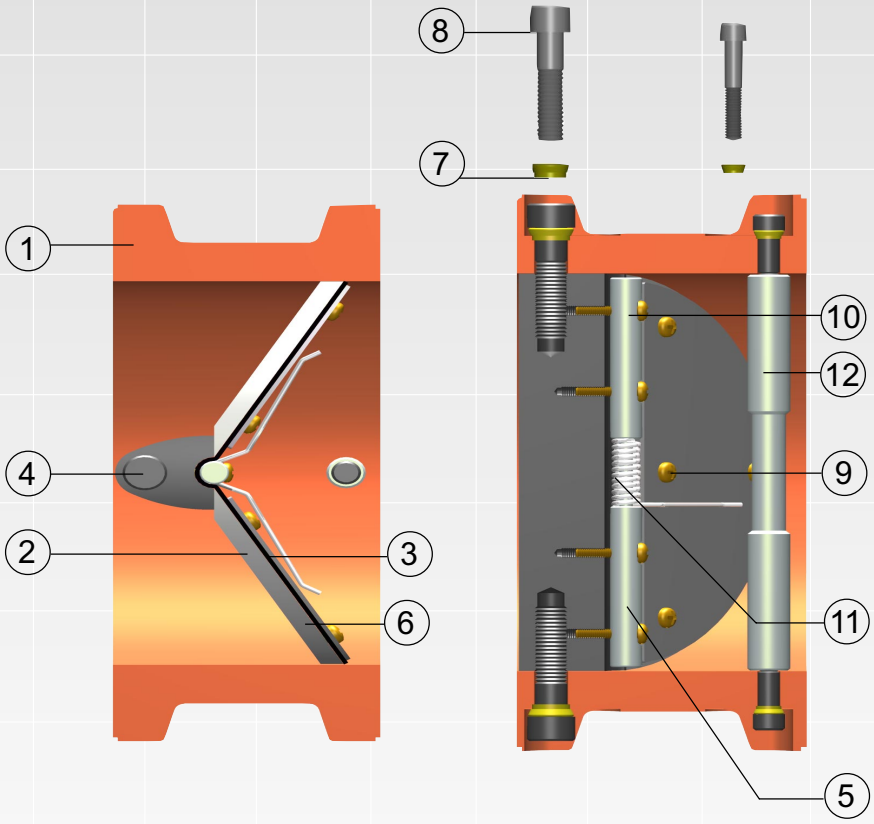

U.S.Valve LLC
168 South Van Brunt St
Englewood NJ 07631
tel: (201) 569 4241
fax: (201) 569 2278
email: info@usvalve.com
website: www.usvalve.com

Pressure Loss Charts:

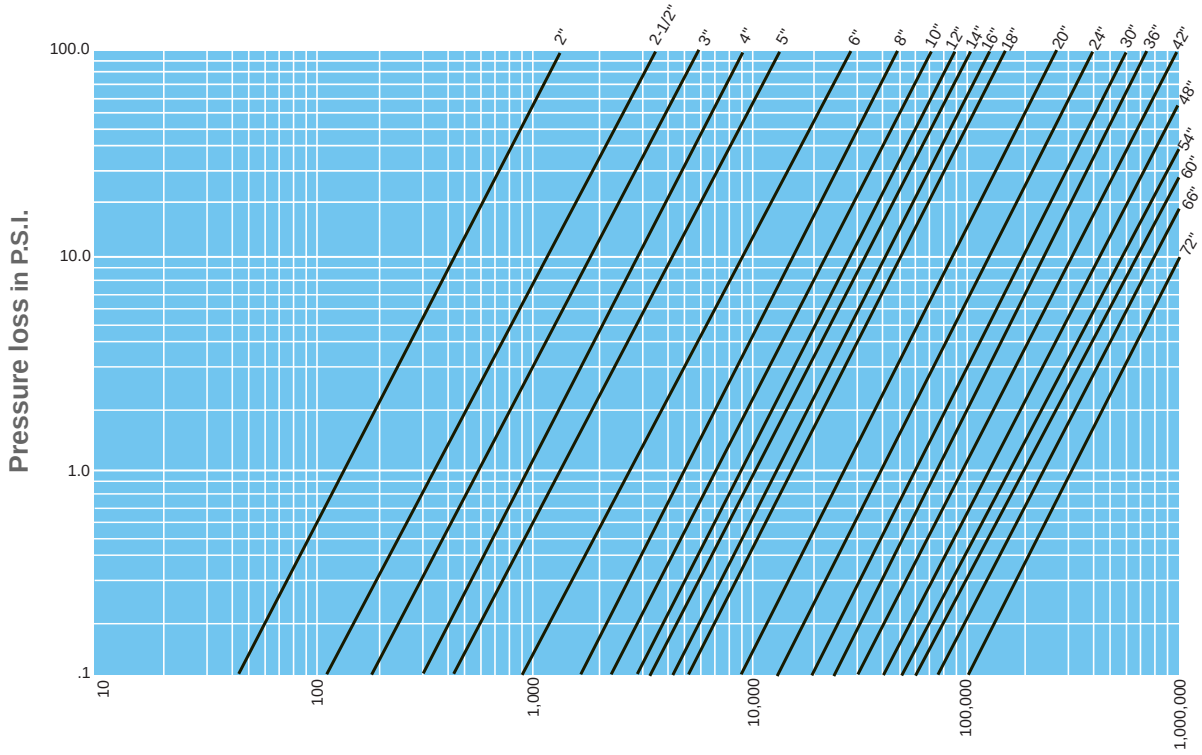

Water Flow - @ 70ºF - GPM

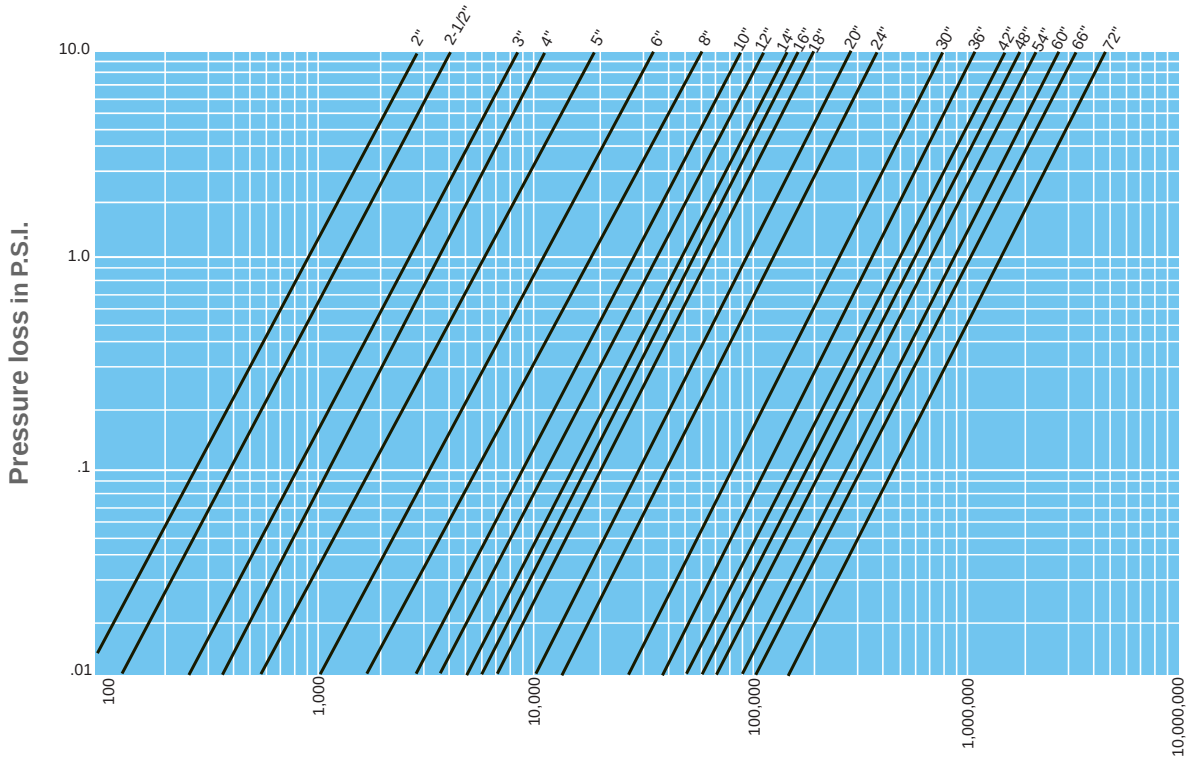

Air Flow - @ 70ºF - SCFM

U.S.Valve LLC
168 South Van Brunt St
Englewood NJ 07631
tel: (201) 569 4241
fax: (201) 569 2278
email: info@usvalve.com
website: www.usvalve.com

U.S. VALVE
168 South Van Brunt St
Englewood NJ 07631
tel (201) 569 4241
fax (201) 569 2278

INSTALLATION INSTRUCTIONS

VALVE INSTALLATION:

1. Remove check valve from packaging and inspect for any shipping damage or loose fasteners. All fasteners have been set with Loctite®. If damaged in shipping, save original box and box contents.
2. If check valve is to be painted or insulated, record the US Valve data on the valve identification tag.
3. If valves are being stored, they should be in a weather-protected area, preferably indoors.
4. Open and close the discs of your valve a few times by hand to assure freedom of movement.
5. **The flow arrow** on your valve indicates the direction of flow upon installation.
6. Use only a **strap type wrench** for installation to prevent distortion of the valve body.
7. The check valve is **not suitable for use on a discharge** of reciprocating or positive displacement compressors or pumps. Pulsating and cyclic flow will damage the valve.
8. **If this valve is installed in a horizontal line,** make sure the screws protruding through the top and bottom of the valve body are in the vertical position. Maintain at least 6 pipe diameters of straight length of piping between the check valve and any other line restriction, i.e. elbows, tees, valves, etc.
9. **If the valve installation is in a vertical line with upward flow,** the position of the wing support is not important. There should be at least 6 pipe diameters of straight unrestricted piping upstream and downstream of the check valve. If space conditions do not allow for this, the valve must be installed so that the flow is equally distributed across the two valve discs *(see figure A below).*

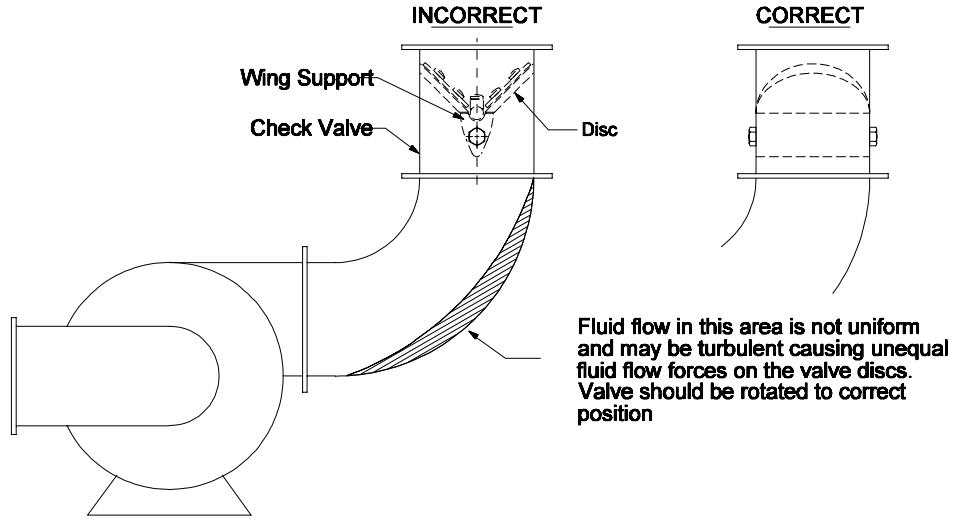

(Figure A)

FOR REPLACEMEMNT OF INTERNALS, SEE REVERSE SIDE →

PARTS REPLACEMENT INSTRUCTIONS

COMPLETE REPLACEMENT OF VALVE INTERNALS:

1. Carefully remove valve from pipeline. **USE ONLY A STRAP TYPE WRENCH.**
2. Hold the valve body in your hand or in a suitable vise to prevent distortion of the valve body.
   NOTE: DO NOT EXERT UNDO FORCE ON THE VALVE BODY. This may permanently effect the valve operation.
3. Remove all valve internals by unscrewing the Wing Support screws *(see Figure 1 below)* and any other body support rods such as travel stop rods (only on large size valves).

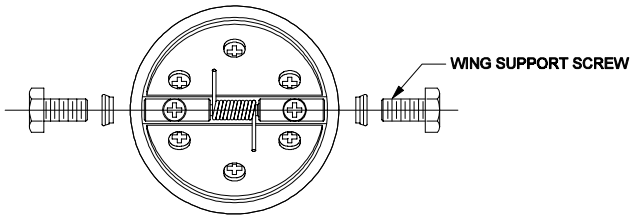

FIGURE 1

4. Inspect the body inside diameter to determine if the body is suitable and retains its original integrity i.e. surface finish is good and roundness apparent.
5. If valve body appears satisfactory and needs only minor cleanup, the valve is then suitable to replace the internals. **DO NOT SANDBLAST OR OTHERWISE DAMAGE THE VALVE BODY'S INNER SURFACE.**
6. Make sure when you order complete internal replacement assemblies that the new assemblies are identical to the original internals. Always reference your check valve's unique serial number when ordering replacements.
7. **Install the new assembly:**
   (a) Put some water on the elastomer seal to act as a lubricant when installing the new wing support assembly into the valve body.
   (b) Make sure you assemble the wing assembly correctly with the direction of flow.
   (c) Align the wing support mounting screw holes and the valve body screw holes properly. *(See Figure 2)*.

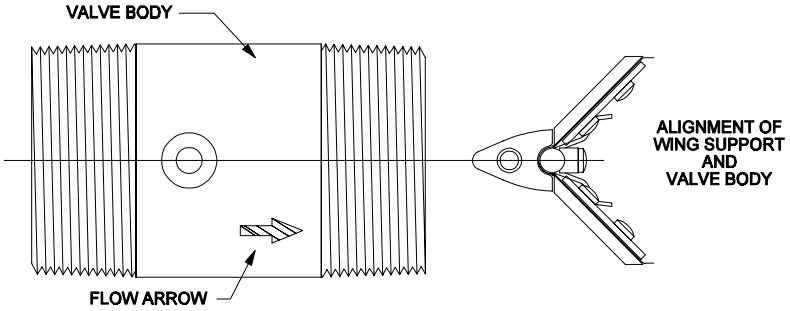

(Figure 2)

   (d) Push wing support assembly into the valve body until the holes line up properly. If you overshoot the hole alignment by half the screw hole diameter, just push the wing support assembly completely through the valve body and repeat the procedure.
   (e) When installing the wing support mounting screws, make sure you install a new Nylite® pressure seal and apply a sufficient amount of Loctite® #242 to the screw threads. The wing support screws should be torqued to 8-ft-lbs for ¼-20 screws and 48 in-lbs for 10-32 screws. Never over tighten screws.
   (f) Allow Loctite® to dry 20 minutes, full cure in 24 hours.

Product Description

The U.S. Valve check valve can be used in most applications where other check valves are in service for both liquids and gases. Check valves are used to prevent reversal of flow in a piping system.

The following is a partial listing of the industries, which use check valves of this type:

Air compressor & vacuum systems	Gas & electrical utilities
Petroleum	Food
Chemical process	Sewage treatment
Water treatment systems	Petroleum
Pneumatic material conveying systems	Heating & cooling systems

The basic valve is light in weight and provides one of the lowest pressure differentials when compared to the other types of check valves. The valve uses an elastomer hinge, which acts as the sealing member. The U.S.Valve is compose of few parts.

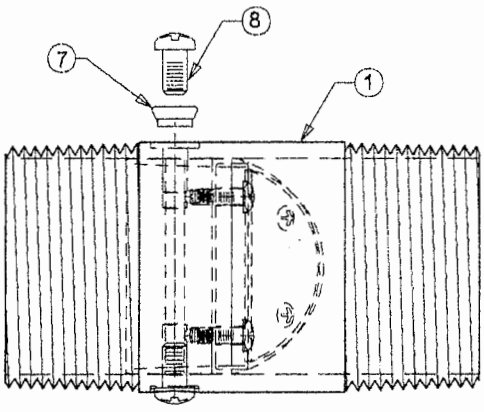

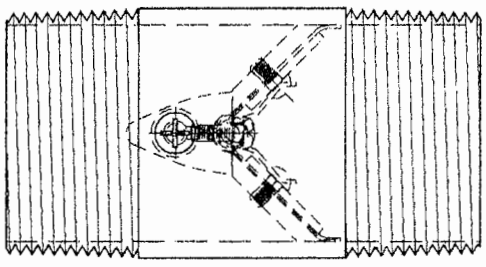

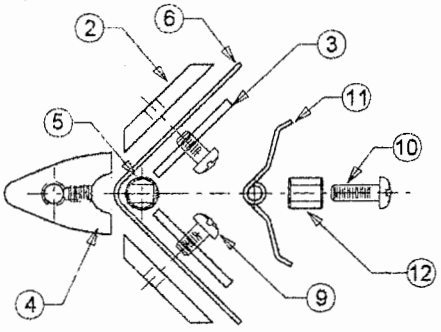

PARTS AND DESCRIPTION	
1	Body
2	Disc
3	Disc Backup
4	Wing Support
5	Wing Pin
6	Seal
7	Sealing Washer
8	Wing Support Screw
9	Disc Assembly Screw
10	Wing Assembly Screw
11	Spring (Optional)
12	Spacer (As Required)

CHECK VALVE SIZING

The proper sizing and installation of the check valve will result in a long and satisfactory service life.

The check valve can be used in both vertical and horizontal piping systems. The valve is suitable for both gaseous and liquid media generally free of particulate matter.

The valve size should be based on certain recommended maximum flow rates and pressure differentials of liquids and gases:

Air	110 feet/sec.	Max. ΔP 0.12
Liquid	12 feet/sec.	Max. ΔP 1.0

As these flow rates increase pressure drop will increase and service life will be shortened.

MATERIALS OF CONSTRUCTION

All the check valves are constructed of high quality materials. The standard valves are all equipped with 316 stainless steel fasteners and wing support pins.

The wing supports are all forged material to provide increased strength. The wing support is designed with an aerodynamic shape to provide smooth flow patterns which decreases flow resistance through the valve. The wing support assembly in its flow open postion provides the greatest open passage for clean low resistance flow.

The various types of material of construction for each type valve can be found in the valve model brochure. The standard check valve does not use a spring for closure but one can be provided if requested. The addition of a spring, depending on the spring rate, will effect the residual opening pressure of the valve.

SEALS

The valve seal is flexible elastomer, which seals against the valve body on closure. Various seal materials are available. The standard check valve contains a Buna-N seal reinforced with nylon cloth.

Temperature °F

Material	Continuous Rating	Major Usage
Buna-N/Nylon	-50 to 200	Air/Water applications Fuel & Oil resistant
Silicone/Fiberglass	-100 to 450	High temperature
EPDM/Nylon	-40 to 250	General use
Viton/Nomex	-20 to 400	High temperature; Chemical resistant

The seal material selected should be properly evaluated by the user and in consultation with U.S.Valve to assure proper performance.

FLUID FLOW

The basic equation for determining the pressure drop through a valve is derived from the following flow equation:

$$Q = \frac{V}{A}$$

V = velocity of fluid FT/SEC

A = open flow area of valve SQFT (from chart)

Q = flow in CUFT/SEC (CFS)

Q can be expressed as GPM = CFS x 448.8

LIQUID PRESSURE DROP

$$Q = C_V \sqrt{\frac{\Delta P}{S_1}}$$

$$\Delta P = \left(\frac{Q}{C_V}\right)^2 S_1$$

C_V = valve coefficient (flow thru valve @ 1 psi ΔP in GPM – see chart)

ΔP = pressure drop across valve – psi

S_1 = specific gravity of liquid relative to water @ 60°F.

Q = flow – GPM

GASEOUS PRESSURE DROP

$$Q_g = 1360\,(C_v)(P_1)\sqrt{\frac{\Delta P}{(S_g)\,t_1\,(P_1)}}$$

Q_g = Gas flow in standard cubic feet/hr – SCFH

$$SCFH = ACFH \left(\frac{P_1}{14.7}\right)\left(\frac{520}{T_1}\right)$$

P_1 = Inlet pressure – psia (psig + 14.7)

ACFH = Actual flow in cubic feet/hr

T_1 = Inlet gas temperature absolute (°F + 460)

C_V = Value coefficient (flow thru valve at 1 psi (ΔP) in GPM)

S_g = Specific gravity of gas = 1.0 for air @ 60°F and 14.7 psi

ΔP = Pressure differential across valve in pounds per square inch – psi

C_V -VALVE COEFFICIENT

Size	C_V valve coefficient (@ ΔP 1 psi)	Valve Cross Section Area FT^2
1	35	.0035
1¼	62	.0071
1½	80	.0081
2	135	.0153
2½	299	.0235
3	582	.0373
4	940	.0702
5	1500	.1015
6	2700	.1557

Butterfly Valves

Pneumatic Valve Actuators

DelVal Butterfly Valves

Leading the Industry with Innovation by Design

DelTech Controls is pleased to offer top-of-the-line products in pipeline flow control. The DelVal Series 50 (wafer body) and Series 52 (lug body) Butterfly Valves have been developed with extensive application, design and manufacturing expertise. These products are produced by employing modern manufacturing practices under a robust quality assurance system. These practices ensure consistent product quality and dependable performance. The DelVal Series 50/52 Butterfly Valves have been designed to include state-of-the-art features that are described in this bulletin.

Features

Stem connection available in standard DelVal sizes or optional sizes to match standard secondary top plate drilling.

Top plate double drilled to fit ISO 5211 dimensions and standard secondary bolt circle dimensions. All handles, gear operators and pneumatic DelTorq actuators are designed to mount directly to DelVal Valves.

Nylon P A 12 coated disc option ensures excellent cor rosion resistance to several chemical media. The har non-porous sintered polymer has v low hygroscopicity and is suitable use in drinking water and n alcoholic foodstuffs.

One piece stem with close tolerance double D drive eliminates the need for disc screws or taper pins.

Double O-rings are molded in both upper and lower journals providing a superior secondary seal.

Unique "Center-Lock" seat design virtually eliminates any seat movement during the seating and un-seating of the disc.

Heavy duty square-grooved seat design with molded O-ring seals to serve as flange gaskets. EPDM and Buna-N seats are peroxide cured to yield the best elastic properties of the elastomer.

"Center-Lock" seat design

Unique stem retention system to provide blow-out proof stem and easy assembly and disassembly of valve.

Heavy duty acetal bushing absorbs the forces acting on the stem/disc assembly due to line pressure.

Bi-directional 'U' cup stem se

Heavy duty one-piece body with extended neck for 2" piping insulation. Standard coating is two coats of hard, Zinc-rich epoxy for excellent corrosion resistance.

Two flange locating holes for sizes up to 12" and four flange locating holes from size 14" to 24" for easy alignment of during valve installation. They meet ANSI #125 /150 or other world drilling standards.

High strength disc with hand polished disc edge and hubs.

Precision machined radius on the upper and lower disc hubs is pressed against upper and lower seat sealing faces for achieving primary sealing between disc and seat.

Engineering

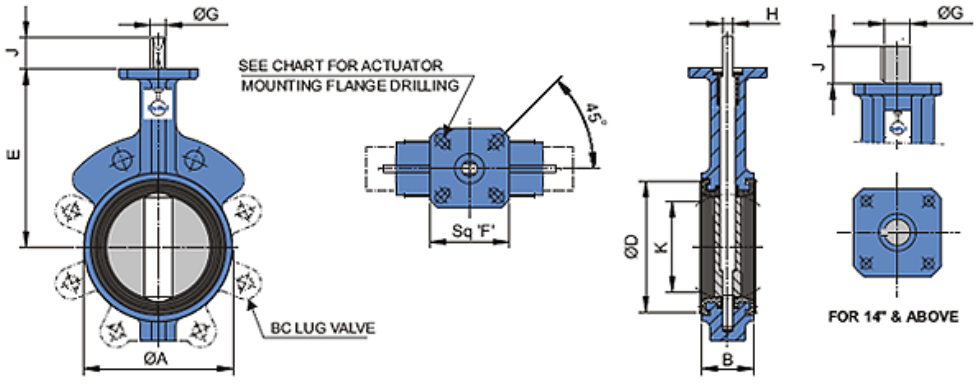

Valve Size		ØA	*B	ØD	E	Sq'F'	Top Plate Drilling			ØG	H	J	Key Size	K	Lug Bolting Data			Weight in Lbs.	
Inch	DN						BC	No. of Holes	Hole Dia						BC	No.of Holes	Threads UNC-2B	Wafer (Series 50)	Lug (Series 52)
2	50	3.46	1.69	2.99	5.51	3.15	2.76/3.25	4	0.39/0.438	0.55	0.39	1.25	---	1.32	4.75	4	5/8-11	5.07	6.79
2 ½	65	4.02	1.81	3.54	5.98	3.15	2.76/3.25	4	0.39/0.438	0.55	0.39	1.25	---	2.05	5.50	4	5/8-11	5.80	7.91
3	80	4.72	1.81	4.17	6.30	3.15	2.76/3.25	4	0.39/0.438	0.55	0.39	1.25	---	2.70	6.00	4	5/8-11	6.83	8.92
4	100	5.91	2.06	5.20	7.09	3.15	2.76/3.25	4	0.39/0.438	0.63	0.43	1.25	---	3.61	7.50	8	5/8-11	10.87	16.37
5	125	6.93	2.13	6.38	7.56	3.15	2.76/3.25	4	0.39/0.438	0.75	0.51	1.25	---	4.92	8.50	8	3/4-10	13.91	21.56
6	150	7.87	2.19	7.36	8.07	3.15	2.76/3.25	4	0.39/0.438	0.75	0.51	1.25	---	5.50	9.50	8	3/4-10	16.31	25.35
8	200	10.04	2.36	9.45	9.43	4.72	2.76/4.92/5.00	4	0.39/0.55/0.563	0.87	0.63	1.25	---	7.39	11.75	8	3/4-10	28.66	37.92
10	250	12.21	2.69	11.50	10.75	4.72	4.92/5.00	4	0.55/0.563	1.18	0.87	2.00	---	9.31	14.25	12	7/8-9	44.09	61.73
12	300	14.17	3.06	13.58	12.24	4.72	4.92/5.00	4	0.55/0.563	1.18	0.87	2.00	---	11.12	17.00	12	7/8-9	60.85	92.26
14	350	16.34	3.06	15.28	13.62	4.72	4.92/5.00	4	0.55/0.563	1.38	---	2.00	0.39x0.39	12.92	18.75	12	1-8	87.96	122.80
16	400	18.58	4.00	17.40	14.76	4.72	4.92	4	0.55	1.38	---	2.00	0.39x0.39	14.80	21.25	16	1-8	130.51	184.31
18	450	20.67	4.50	19.49	15.98	6.70	6.50	4	0.83	1.97	---	2.50	0.39x0.47	16.59	22.75	16	11/8 -7	194.45	239.42
20	500	22.83	5.00	21.57	17.24	6.70	6.50	4	0.83	1.97	---	2.50	0.39x0.47	18.61	25.00	20	11/8 -7	236.78	306.88
24	600	27.24	6.06	25.75	19.49	Ø8.27	6.50	4	0.83	2.50	---	4.00	0.62x0.62	22.55	29.50	20	11/4 -7	385.81	477.08

Valve Size		ØA	*B	ØD	E	Sq'F'	Top Plate Drilling			ØG	H	J	Key Size	K	Lug Bolting Data			Weight in Kg.	
Inch	DN						BC	No. of Holes	Hole Dia						BC	No.of Holes	Threads UNC-2B	Wafer (Series 50)	Lug (Series 52)
2	50	88	43	76	140	80	70/82.5	4	10/11	14	10	32	---	33.5	120.7	4	5/8-11	2.30	3.08
2 ½	65	102	46	90	152	80	70/82.5	4	10/11	14	10	32	---	52.1	139.7	4	5/8-11	2.63	3.59
3	80	120	46	106	160	80	70/82.5	4	10/11	14	10	32	---	68.5	152.4	4	5/8-11	3.10	4.05
4	100	150	52	132	180	80	70/82.5	4	10/11	16	11	32	---	91.7	190.5	8	5/8-11	4.93	7.42
5	125	175	55	160	192	80	70/82.5	4	10/11	19	13	32	---	117.3	215.9	8	3/4-10	6.31	9.78
6	150	200	56	187	205	80	70/82.5	4	10/11	19	13	32	---	139.7	241.3	8	3/4-10	7.40	11.50
8	200	233	60	240	241	120	125/127	4	14/14.3	22	16	32	---	187.3	298.5	8	3/4-10	12.70	17.20
10	250	310	68	292	273	120	125/127	4	14/14.3	30	22	51	---	236.4	362.0	12	7/8-9	20.00	28.00
12	300	360	78	345	311	120	125/127	4	14/14.3	30	22	51	---	282.4	431.8	12	7/8-9	27.60	41.85
14	350	415	78	388	346	120	125/127	4	14/14.3	35	---	51	10x10	328.3	476.2	12	1-8	39.90	55.70
16	400	472	102	442	375	120	125	4	14	35	---	51	10x10	375.8	539.7	16	1-8	59.20	83.60
18	450	525	114	495	406	170	165	4	21	50	---	64	10x12	421.4	577.8	16	1 1/8-7	88.20	108.60
20	500	580	127	548	438	170	165	4	21	50	---	64	10x12	472.6	635.0	20	1 1/8-7	107.40	139.20
24	600	692	154	654	495	Ø210	165	4	21	63.5	---	102	15.88x15.88	572.7	749.3	20	1 1/4-7	175.00	216.40

*Face to face dimension "B " generally confor ming to API 609 Categor y A/BS EN 558-1 Series 20/ISO 5752 Series 20 / MS S SP 67 / ASME B 16.10

Valve Size		2"	2.5"	3"	4"	5"	6"	8"	10"	12"	14"	15"	18"	20"	24"
Full Rated Pressure Valve ¡÷P,PSI	50	62	106	115	241	300	484	878	1409	2366	3064	3684	5796	6741	9601
	100	72	124	142	256	363	545	977	1586	2677	3527	4428	7273	8441	12482
	150	80	142	177	271	426	582	1083	1756	2987	3980	5178	8756	10126	15576
	175	91	150	197	279	443	620	1133	1841	3146	---	---	---	---	---
Reduced Disc Dia.¡÷P,PSI	50	62	106	115	133	187	267	623	771	1259	2159	2627	3649	4285	6500
Full Rated Pressure Valve ¡÷P,Bar	3.5	7	12	13	27	41	55	99	159	267	346	416	655	762	1085
	7	8	14	16	29	44	62	110	179	302	398	500	822	954	1410
	10	9	16	20	31	48	66	122	198	337	450	585	989	1144	1760
	12	10	17	22	32	50	70	128	208	355	---	---	---	---	---
Reduced Disc Dia.¡÷P,Bar	3.5	7	12	13	15	21	30	70	87	142	244	297	412	484	734

Material of Construction

Body **Stem**

• Cast Iron ASTM A126 Class B
• Ductile Iron ASTM A536 Grade 65-45-12
• Carbon steel ASTM A 216 WCB

Disc

• Nylon 12 Coated Ductile Iron ASTM A536 Grade 65-45-12
• DI ASTM A 536 Grade 65-45-12 + Aroxy coated
• 316 Stainless Steel ASTM A351 Grade CF8
• 410 Stainless Steel ASTM A479 Type 410
• 316 Stainless Steel ASTM A276 Type 316
• Carbon steel BS 970

Seat

• EPDM - Food Grade
• Buna-N - Food Grade
• White Buna-N - Food Grade
• Viton / FKM - Food Grade
• Silicone

General Design and Manufacturing Standard: API 609 / BS EN -593

Seat Temperature Range

Seat Type	Temperature Range	
	Min	Max
EPDM	-13° F(-25° C)	248° F(120° C)
BUNA-A	-13° F(-25° C)	212° F(100° C)
White BUNA-A	-13° F(-25° C)	212° F(100° C)
Viton/FKM	-23° F(-50° C)	356° F(200° C)
Silicone	-58° F(-50° C)	356° F(180° C)

*Vitonis registered trademark of E.I. DuPont

Testing Standard :

API 598 / BS EN 12266-1

Pressure Rating

For bi-directional bubble tight shut off and fu vacuum ser vice with disc in the closed posit

INCH	DN	PSIG	BARG
2"-12"	50-300	230	16
2"-12"	50-300	175	12
2"-24"	50-300	150	10
2"-24"	350-600	50	3.5

Dead-End Service : Without a downstream flange installed, the dead-end pressure ratings are equal to the values stated above.

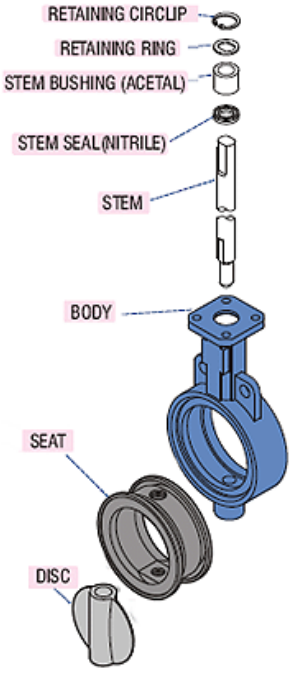

Operators

Valves up to size 12" can be supplied with lever handles for manual operation. Optional accessories for hand-lever operation can be provided for various flow control requirements. Pad locking can also be provided for preventing unauthorized operation

Valves up to size 24" can be direct mounted with gear operators for manual operation. Gear operators can also be attached with chainwheel operators for opening or closing valves located on pipelines at high elevations.

All valves can be direct mounted with pneumatic actuators or electric actuators and accessories for complete automation options such as fail open/close & positioner controlled. Valves can be mounted with manual overrides.

Copyright ©2008 Delval flow controls pvt.ltd. All rights reserved.¡¡

Butterfly Valves

Pneumatic Valve Actuators

DelVal Butterfly Valves

Leading the Industry with Innovation by Design

DelTech Controls is pleased to offer top-of-the-line products in pipeline flow control. The DelVal Series 50 (wafer body) and Series 52 (lug body) Butterfly Valves have been developed with extensive application, design and manufacturing expertise. These products are produced by employing modern manufacturing practices under a robust quality assurance system. These practices ensure consistent product quality and dependable performance. The DelVal Series 50/52 Butterfly Valves have been designed to include state-of-the-art features that are described in this bulletin.

Features

Stem connection available in standard DelVal sizes or optional sizes to match standard secondary top plate drilling.

Top plate double drilled to fit ISO 5211 dimensions and standard secondary bolt circle dimensions. All handles, gear operators and pneumatic DelTorq actuators are designed to mount directly to DelVal Valves.

Nylon P A 12 coated disc option ensures excellent cor rosion resistance to several chemical media. The har non-porous sintered polymer has v low hygroscopicity and is suitable use in drinking water and n alcoholic foodstuffs.

One piece stem with close tolerance double D drive eliminates the need for disc screws or taper pins.

Double O-rings are molded in both upper and lower journals providing a superior secondary seal.

Unique "Center-Lock" seat design virtually eliminates any seat movement during the seating and un-seating of the disc.

Heavy duty square-grooved seat design with molded O-ring seals to serve as flange gaskets. EPDM and Buna-N seats are peroxide cured to yield the best elastic properties of the elastomer.

"Center-Lock" seat design

Unique stem retention system to provide blow-out proof stem and easy assembly and disassembly of valve.

Heavy duty acetal bushing absorbs the forces acting on the stem/disc assembly due to line pressure.

Bi-directional 'U' cup stem se

Heavy duty one-piece body with extended neck for 2" piping insulation. Standard coating is two coats of hard, Zinc-rich epoxy for excellent corrosion resistance.

Two flange locating holes for sizes up to 12" and four flange locating holes from size 14" to 24" for easy alignment of during valve installation. They meet ANSI #125 /150 or other world drilling standards.

High strength disc with hand polished disc edge and hubs.

Precision machined radius on the upper and lower disc hubs is pressed against upper and lower seat sealing faces for achieving primary sealing between disc and seat.

Engineering

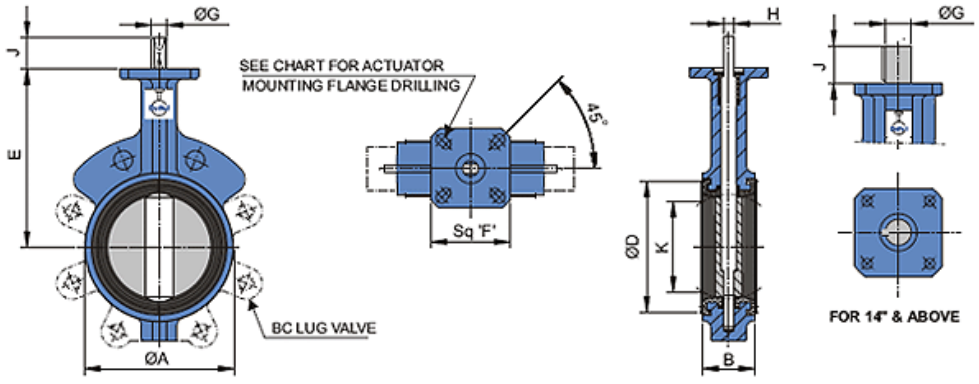

Valve Size		ØA	*B	ØD	E	Sq'F'	Top Plate Drilling			ØG	H	J	Key Size	K	Lug Bolting Data			Weight in Lbs.	
Inch	DN						BC	No. of Holes	Hole Dia						BC	No.of Holes	Threads UNC-2B	Wafer (Series 50)	Lug (Series 52)
2	50	3.46	1.69	2.99	5.51	3.15	2.76/3.25	4	0.39/0.438	0.55	0.39	1.25	---	1.32	4.75	4	5/8-11	5.07	6.79
2 ½	65	4.02	1.81	3.54	5.98	3.15	2.76/3.25	4	0.39/0.438	0.55	0.39	1.25	---	2.05	5.50	4	5/8-11	5.80	7.91
3	80	4.72	1.81	4.17	6.30	3.15	2.76/3.25	4	0.39/0.438	0.55	0.39	1.25	---	2.70	6.00	4	5/8-11	6.83	8.92
4	100	5.91	2.06	5.20	7.09	3.15	2.76/3.25	4	0.39/0.438	0.63	0.43	1.25	---	3.61	7.50	8	5/8-11	10.87	16.37
5	125	6.89	2.19	6.30	7.56	3.15	2.76/3.25	4	0.39/0.438	0.75	0.51	1.25	---	4.62	8.50	8	3/4-10	13.91	21.56
6	150	7.87	2.19	7.09	8.07	3.15	2.76/3.25	4	0.39/0.438	0.75	0.51	1.25	---	5.50	9.50	8	3/4-10	19.31	25.00
8	200	10.04	2.38	9.45	9.49	4.72	2.76/4.92/5.00	4	0.39/0.55/0.563	0.87	0.63	1.25	---	7.39	11.75	8	3/4-10	28.00	37.92
10	250	12.21	2.56	11.50	10.75	4.72	4.92/5.00	4	0.55/0.563	1.18	0.87	2.00	---	9.61	14.25	12	7/8-9	44.95	51.76
12	300	14.17	3.06	13.58	12.24	4.72	4.92/5.00	4	0.55/0.563	1.18	0.87	2.00	---	11.12	17.00	12	7/8-9	60.85	92.26
14	350	16.34	3.06	15.28	13.62	4.72	4.92/5.00	4	0.55/0.563	1.38	---	2.00	0.39x0.39	12.92	18.75	12	1-8	87.96	122.80
16	400	18.58	4.00	17.40	14.76	4.72	4.92	4	0.55	1.38	---	2.00	0.39x0.39	14.80	21.25	16	1-8	130.51	184.31
18	450	20.67	4.50	19.49	15.98	6.70	6.50	4	0.83	1.97	---	2.50	0.39x0.47	16.59	22.75	16	11/8 -7	194.45	239.42
20	500	22.83	5.00	21.57	17.24	6.70	6.50	4	0.83	1.97	---	2.50	0.39x0.47	18.61	25.00	20	11/8 -7	236.78	306.88
24	600	27.24	6.06	25.75	19.49	Ø8.27	6.50	4	0.83	2.50	---	4.00	0.62x0.62	22.55	29.50	20	11/4 -7	385.81	477.08

Valve Size		ØA	*B	ØD	E	Sq'F'	Top Plate Drilling			ØG	H	J	Key Size	K	Lug Bolting Data			Weight in Kg.	
Inch	DN						BC	No. of Holes	Hole Dia						BC	No.of Holes	Threads UNC-2B	Wafer (Series 50)	Lug (Series 52)
2	50	88	43	76	140	80	70/82.5	4	10/11	14	10	32	---	33.5	120.7	4	5/8-11	2.30	3.08
2 ½	65	102	46	90	152	80	70/82.5	4	10/11	14	10	32	---	52.1	139.7	4	5/8-11	2.63	3.59
3	80	120	46	106	160	80	70/82.5	4	10/11	14	10	32	---	68.5	152.4	4	5/8-11	3.10	4.05
4	100	150	52	132	180	80	70/82.5	4	10/11	16	11	32	---	91.7	190.5	8	5/8-11	4.93	7.42
5	125	175	56	160	192	80	70/82.5	4	10/11	19	13	32	---	117.3	215.9	8	3/4-10	6.31	9.78
6	150	200	60	180	200	80	70/82.5	4	10/11	19	13	32	---	139.7	241.3	8	3/4-10	7.40	11.30
8	200	255	60	240	241	120	70/125/127	4	10/14/14.3	22	16	32	---	187.6	298.5	8	3/4-10	12.70	17.20
10	250	315	68	292	276	120	125/127	4	14/14.3	30	22	51	---	239.4	362.0	12	7/8-9	20.60	29.00
12	300	360	78	345	311	120	125/127	4	14/14.3	30	22	51	---	282.4	431.8	12	7/8-9	27.60	41.85
14	350	415	78	388	346	120	125/127	4	14/14.3	35	---	51	10x10	328.3	476.2	12	1-8	39.90	55.70
16	400	472	102	442	375	120	125	4	14	35	---	51	10x10	375.8	539.7	16	1-8	59.20	83.60
18	450	525	114	495	406	170	165	4	21	50	---	64	10x12	421.4	577.8	16	1 1/8-7	88.20	108.60
20	500	580	127	548	438	170	165	4	21	50	---	64	10x12	472.6	635.0	20	1 1/8-7	107.40	139.20
24	600	692	154	654	495	Ø210	165	4	21	63.5	---	102	15.88x15.88	572.7	749.3	20	1 1/4-7	175.00	216.40

*Face to face dimension "B " generally confor ming to API 609 Categor y A/BS EN 558-1 Series 20/ISO 5752 Series 20 / MS S SP 67 / ASME B 16.10

Valve Size		2"	2.5"	3"	4"	5"	6"	8"	10"	12"	14"	15"	18"	20"	24"
Full Rated Pressure Valve ¡÷P,PSI	50	62	106	115	241	360	484	878	1409	2366	3064	3684	5796	6741	9601
	100	72	124	142	256	393	549	977	1586	2677	3527	4428	7273	8441	12482
	150	80	142	177	271	426	582	1083	1756	2987	3980	5178	8756	10126	15576
	175	91	150	197	279	443	620	1133	1841	3146	---	---	---	---	---
Reduced Disc Dia.¡÷P,PSI	50	62	106	115	133	187	267	623	771	1259	2159	2627	3649	4285	6500
Full Rated Pressure Valve ¡÷P,Bar	3.5	7	12	13	27	41	55	99	159	267	346	416	655	762	1085
	7	8	14	16	29	44	62	110	179	302	398	500	822	954	1410
	10	9	16	20	31	48	66	122	198	337	450	585	989	1144	1760
	12	10	17	22	32	50	70	128	208	355	---	---	---	---	---
Reduced Disc Dia.¡÷P,Bar	3.5	7	12	13	15	21	30	70	87	142	244	297	412	484	734

Material of Construction

Body **Stem**

• Cast Iron ASTM A126 Class B
• Ductile Iron ASTM A536 Grade 65-45-12
• Carbon steel ASTM A 216 WCB

Disc

• Nylon 12 Coated Ductile Iron ASTM A536 Grade 65-45-12
• DI ASTM A 536 Grade 65-45-12 + Aroxy coated
• 316 Stainless Steel ASTM A351 Grade CF8
• 410 Stainless Steel ASTM A479 Type 410
• 316 Stainless Steel ASTM A276 Type 316
• Carbon steel BS 970

Seat

• EPDM - Food Grade
• Buna-N - Food Grade
• White Buna-N - Food Grade
• Viton / FKM - Food Grade
• Silicone

General Design and Manufacturing Standard: API 609 / BS EN -593

Seat Temperature Range

Seat Type	Temperature Range	
	Min	Max
EPDM	-13° F(-25° C)	248° F(120° C)
BUNA-A	-13° F(-25° C)	212° F(100° C)
White BUNA-A	-13° F(-25° C)	212° F(100° C)
Viton/FKM	-23° F(-50° C)	356° F(200° C)
Silicone	-58° F(-50° C)	356° F(180° C)

*Vitonis registered trademark of E.I. DuPont

Testing Standard :

API 598 / BS EN 12266-1

Pressure Rating

For bi-directional bubble tight shut off and fu vacuum ser vice with disc in the closed posit

INCH	DN	PSIG	BARG
2"-12"	50-300	230	16
2"-12"	50-300	175	12
2"-24"	50-300	150	10
2"-24"	350-600	50	3.5

Dead-End Service : Without a downstream flange installed, the dead-end pressure ratings are equal to the values stated above.

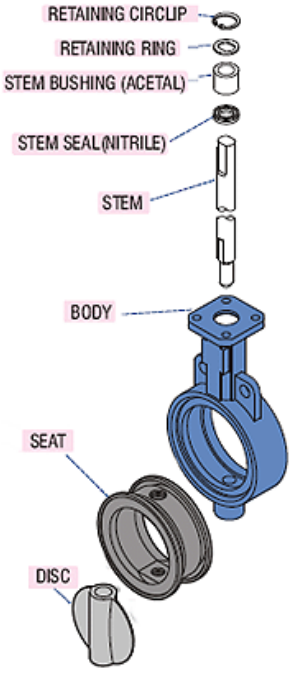

Operators

Valves up to size 12" can be supplied with lever handles for manual operation. Optional accessories for hand-lever operation can be provided for various flow control requirements. Pad locking can also be provided for preventing unauthorized operation

Valves up to size 24" can be direct mounted with gear operators for manual operation. Gear operators can also be attached with chainwheel operators for opening or closing valves located on pipelines at high elevations.

All valves can be direct mounted with pneumatic actuators or electric actuators and accessories for complete automation options such as fail open/close & positioner controlled. Valves can be mounted with manual overrides.

Copyright ©2008 Delval flow controls pvt.ltd. All rights reserved.¡¡

DelTech	**DelTech Controls, L.L.C.**	**DelVal Flow Controls Private limited** (A DIVISION OF DelTech CONTROLS LLC, USA)

DelVal Series – 50/52, 5A/5B Butterfly Valves

INSTALLATION, OPERATION AND MAINTENANCE MANUAL

ENGINEERING DATA SHEET
E.D.S. NO – EDS 055
ISSUE DATE : NOVEMBER 2006

(Please read the entire instructions carefully before installation or servicing.)

Guarantee :

"Our liability, with respect to any defect or failure of the goods supplied or for any loss, injury or damage attributable onward, is limited to replacement or repair of the defects which under proper use appear therein and arise solely from faulty materials and workmanship. This guarantee is for a period of 18 calendar months after the original goods were first shipped or within 12 calendar months from the date of installation, whichever is earlier, provided that such defective parts are returned without charge to our factory for examination. No other warranty is either expressed or implied."

TABLE OF CONTENTS

Item	Description	Page no
1.	Introduction	2
2.	Technical Data	2
3.	Safety Precautions	2
4.	Transportation, Receiving and Storage	3
5.	Installation	3
6.	Operation of the Valve	4
7.	Maintenance	4
8.	Disassembly & Assembly Instructions	5
9.	Recommended Spare Parts	6
10.	Exploded View	7
11	Troubleshooting	8

1 Introduction

1.1 Scope of the Manual.

The purpose of this manual is to ensure that the valves supplied are properly installed and maintained to give trouble free performance.

This manual covers DelVal single piece body butterfly valves from 2” to 24” in both wafer and lug designs.

1.2 Marking.

Specifications of the valve are marked on the body or on name plate or both, prior to shipment. The identification marking generally consists of size of valve, pressure rating, body material, trim material and the date of manufacturing. (Ref to fig 1.1)

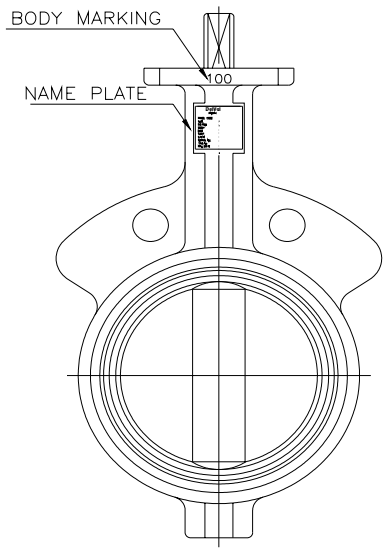

Fig 1.1 Valve Marking

2 Technical data

2.1 Pressure Rating

Construction :
Single piece body both in wafer and lug design.

Pressure Rating :

Valve Size	Rating
2” - 12”	175 PSI.
14” - 24”	150 PSI.
2” – 24”	50 PSI.

Seat Temperature Range.

Seat type	Temperature Range
EPDM	-13^0 F (-25^0 C) TO 248^0 F (120^0 C)
BUNA-N / Nitrile	-13^0 F (-25^0 C) TO 212^0 F (100^0 C)
Viton / FKM	-23^0 F (-5^0 C) TO 392^0 F (200^0 C)
Silicone	-58^{0}F (-50^0 C) TO 356^0 F (180^0 C)

3 Safety Precautions.

3.1 Do not exceed the valve pressure / temperature rating limitations!

- *Exceeding the pressure/temperature rating limitations marked on the valve may result in major damage or Personal injury. Users of these valves should ensure that the valve pressure / temperature is less than or equal to the rated pressure/temperatures. If required, end user should incorporate appropriate limiting/monitoring devices in the system for the safe operation of the valve.*

3.2 Use the valve for specified application only!

- *User to ensure that the valve is used only for the specified application as agreed between the manufacturer and the purchaser.*

3.3 Follow the safety rules and regulations!

- *User of the valve must be aware of all the safety rules and regulations related to a particular environment in which the valve is to be used.*

3.4 Do not disassemble the valve or remove it from the pipeline while the valve is pressurized!

- *Disassembling or removing a pressurized valve will result in uncontrolled pressure release. Always isolate the relevant part of the pipeline, release the pressure from the valve and remove the media before dismantling the valve.*
- *Be aware of the type of media involved. Protect people and the environment from any harmful or poisonous substances.*
- *Make sure that no dust, dirt can enter the pipeline during the valve maintenance.*

3.5 When handling the valve or the valve package, bear in mind its weight!

- *Never lift the valve or valve package by the handle, gear operator, actuator or hand wheel. Place the rope securely around the valve body while handling the valve. Refer to Fig No. 1.2*

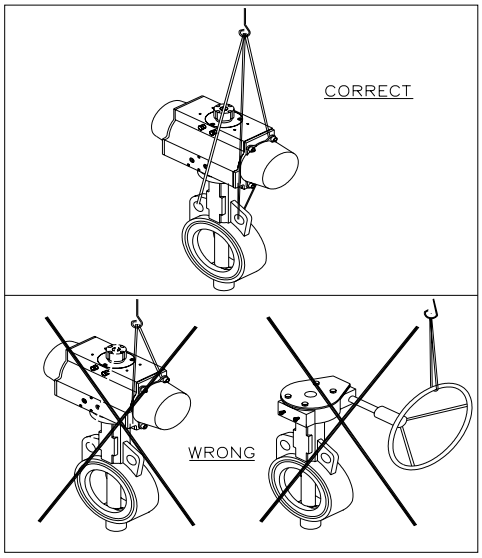

Fig 1.2 Lifting of the Valve

4 Transportation, Receiving and Storage.

4.1 Valves are being packed in cartons, boxes or pallets while shipping to the customer. Care should be taken to store them in a suitable place. We recommend storing the valves indoors in a dry and dust free atmosphere (Refer to figure 2.1). While unpacking the valves, check that the valves and any other accessories have not been damaged during transportation.

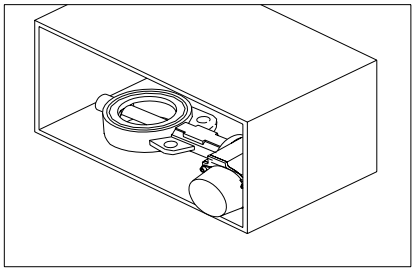

Fig 2.1 Storing the Valve.

- ***Caution:***
  Placing the valves directly on the ground or on a concrete floor should be avoided!

4.2 All wrapping and protection on the valves should not be removed until the valve is ready for installation. All valves are delivered with disc in 10^0 open position (Refer to figure 2.2).

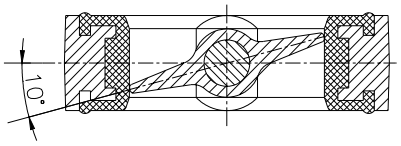

Fig 2.2 Disc in 10^0 open position

4.3 If the valves are stored for a long time, then all the valves should be cleaned and hydro / pneumatic tested before installation. Refer to General Arrangement drawing, which lists the appropriate testing standards, or consult the nearest branch office / factory for more information.

4.4 Valves are bi-directional and can be installed in either direction.

4.5 Lever or hand wheel of gear operator for respective valves are packed loosely and kept in the same box, in which the valve is packed (wherever applicable). When handling the valve either by hand or by mechanical means, special care should be taken not to damage the lever or gear operator. Lift the valve only as shown in fig 1.2. Lifting the valve from any other location may damage the valve components.

5 Installation

5.1 When removing the valve from storage a careful check should be made to ensure that the valve has not been damaged during the storage period.

5.2 Valve open or close position is indicated on the notch plate for lever operated valves or on the top of the gear operator for gear operator operated valves.

5.3 Center valve, span body with bolts, but do not tighten. Slowly open disc to ensure that it clears adjacent pipe ID and leave at full open position. Tighten bolts in cris

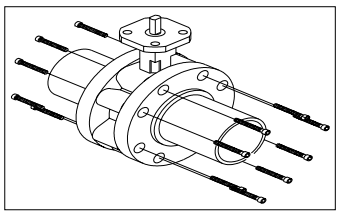

cross pattern.

Fig 3.1 Lug Valve Installation.

5.4 For flange welding center valve with disc 10^0 open between flanges, span bolts, align this assembly in pipe and tack weld flanges to pipe. After tack welding, remove valve and finish welding.

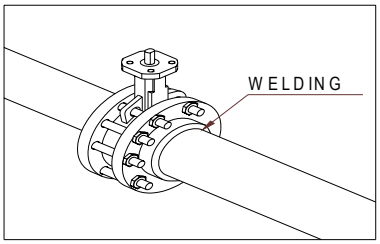

Fig 3.2

5.5 Valve should be checked for identification purpose and ensure that characteristics of valve matches to those specified for piping specifications, for the line where that is to be mounted. Nameplate instructions will give the necessary information.

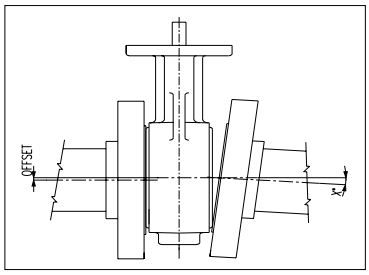

Fig 3.3 Valve Alignment.

Note:
It is recommended to use ASTM A193 Gr.B7 fasteners for flange bolting.

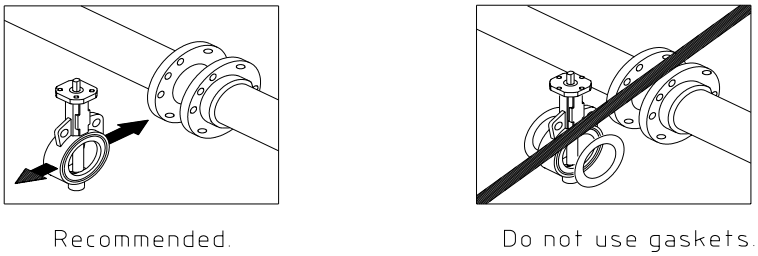

Fig 3.4 : Installation of valve into pipe line.

Note: *a) Do not attempt to correct the line misalignment by means of flange bolting Ref to fig 3.3.*
b) Do not use flange gaskets Ref to fig 3.4.

6 Operation of the Valve.

6.1 For lever operated valves, the hand lever is either assembled with the valve or shipped loose depending upon the size of valve / hand lever.

6.2 For gear operated valves, ***THE GEAR OPERATOR OPEN / CLOSE ADJUSTMENT HAS BEEN DONE PRIOR TO SHIPMENT AND MUST NOT BE CHANGED.*** Rotation of hand wheel in the clockwise direction closes the valve and counter clockwise rotation opens it. (Looking from hand wheel end) The details of gear operator are shown in the fig. 4.1. The internal details/construction of gear operator may vary as per manufacturers standard.

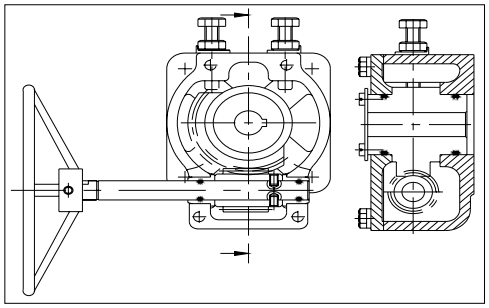

Fig 4.1 : Details of gear operator.

6.3 DelTech Butterfly valve always close in a clockwise direction. Valve should always be rotated through 90º to the fully opened or fully closed position.

6.4 Valve should be opened and closed slowly to avoid hammering effect on the valve and pipeline.

6.5 Once the flushing is complete, valve should be operated 3-4 times and then kept in the fully open position.

6.6 If the valve is not operating to fully open or fully closed position, and/or leaking, do not apply excessive force to operate the valve. This can damage the seats or stem.

Caution:

- *Apply gradual force on the handwheel of the gear operator and do not give impacts.*
- *Do not apply extra leverage (using pipe/bar), when the end stops of the gear operator are reached.*

7 Maintenance.

Note:
Observe the safety precautions as outlined in section 3 before performing maintenance.

7.1 Preventive Maintenance.

7.1.1 In order to avoid valve failure during operation, all valves in a process plant should be periodically inspected thoroughly to detect the wear of disc, seats, seals and even body. It is recommended that on such occasions seats, seals and bushings should be replaced.

7.1.2 The type of process, fluids involved, working conditions and location of the valves in the process plants, will determine the frequency of periodic inspection / maintenance which in fact will be made at the time of partial or total shutdown of the plant. Preventive maintenance is absolutely essential as the failure due to lack of the same may cause an emergency shut down of the plant.

7.1.3 Section 8 describes the procedure for disassembly, repair and assembly of the valve. The procedure will be the same for a valve failing during operation due to lack of preventive maintenance.

7.1.4 Once a valve is repaired, it should undergo a complete set of tests to make sure that the valve is adequate for the original working conditions. Hydro/Pneumatic tests should be carried out as per the specifications relevant to the valve (Refer General Arrangement Drawing).

7.2 Lubrication of Worm Gear operator.

7.2.1 Worm gear operators are packed with grease. Normally the grease is suitable for -20°C (-4^{0}F) to 80°C (176^{0}F). For other applications, consult the nearest branch office / factory.

7.2.2 Grease should be changed as following. If operated frequently, after approx. 3 years. If operated rarely, after approx. 5 years.

7.2.3 Recommended Greases-
Servogem EP2 (Extreme Pressure),
Mobilux EP2,
Valvoline EP2,
Chevron EP2.

WARNING

Pipeline pressure can propel the loose flange bolts & flanges, and can cause personal injury or equipment damage. Relieve pipeline pressure before removing flange bolts and flanges.

WARNING

Moving Parts from accidental operation of powered (Pneumatically / Electrically) actuator can cause personal injury or equipment damage. Disconnect and lock power to actuator before servicing.

8 Disassembly and Assembly Instructions :

8.1 Disassembly Instructions:

(Refer to exploded view No. 10.1)

Before disassembling, please ensure that all spare parts as detailed in Table 1 of Section 9, are available. For below mentioned procedure, the numbers in the bracket refer to the part numbers of the components as indicated in exploded view (fig no 10.1).

- In case the valve is in operation, release the pressure from the line.
- Rotate the valve stem (04) manually to keep the Valve in the half-open position. This will remove pressure in the pipeline.
- Always fully close valve before removing from line to avoid damage to disc
- Valve can be repaired by removing the entire valve from pipeline. Use mounting holes to lift the valve (Wherever applicable).

8.1.1 Unscrew the lever lock bolt (13). Lift the lever (14) by pressing the latch of the lever out of the stem (4) in case of hand lever operated valve.

8.1.2 Lift the gear operator (15) out of the stem (4) by removing the bolts in case of gear operated valve.

8.1.3 Remove the notch plate bolts (10,11,12) and remove the notch plate (9).

8.1.4 Remove the circlip (8) (fig 8.1) and pull the stem out with stem retainer ring (7).

8.1.5 Pull the disc (3) from the body (1) as shown in fig 8.2

8.1.6 Remove the stem bushing (6) and U cup stem seal (5) from the body (4).

8.1.7 Compress the seat as shown and pull it out from the body (Refer to the fig 8.3).

Note: *After the complete disassembly of the valve, all the components should be stored in a clean place to avoid damage.*

8.2 Repair of Components.

8.2.1 The metallic parts should be cleaned.

8.2.2 To clean the seats and seals use a dry clean cloth.

8.2.3 After cleaning components examine for damaged parts. Ensure that there are no scoring marks on the metallic sealing surfaces. Check the seals for scratches / wear.

8.2.4 Replace the damaged parts. The parts such as seal, bushings are recommended to be replaced with new ones whenever the valve is dis-assembled: refer to Table 1 of Section – 9 for further details.

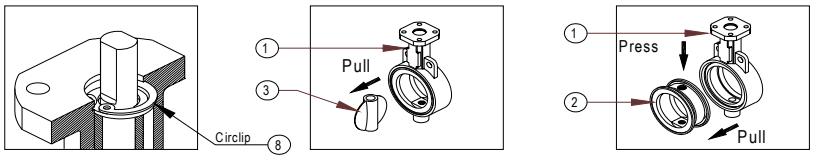

Fig 8.1 Fig 8.2 Fig 8.3

Disassembly of the Stem, Disc and Seat.

Note: *When the gear operator or hand lever or actuator is re-assembled on the valve, it may be necessary to adjust gear operator or hand lever or actuator travel stops to ensure proper setting of the butterfly in the open and closed position*

8.3 Assembly Instructions.

(Refer to exploded view No. 10.1)

8.3.1 VALVES OPERATING WITH LEVER.

8.3.1.1 Place the body (1) on a clean work surface.

8.3.1.2 Start assembly by pressing the seat as shown & pushing it into the valve body with seat stem holes aligned to the body stem holes as shown in the fig (8.4) and work the seat into the groove provided on the body.

8.3.1.3 Position the disc (2) as shown in fig (8.5) taking care that double D is at the bottom of the valve body. Special care must be taken not to damage the seat surface.

8.3.1.4 Insert U cup seal (5), bushing (6) refer fig no 8.6.

8.3.1.5 For 2”-12”(series 50/52) and 2”-8” (series 5A/5B) Insert the stem (4) in to the body ensuring that double D of stem aligns with double D of the disc. Insert the retaining ring (7) in to the stem and then install the retaining circlip (8) refer fig no 8.6.

8.3.1.6 For 14” -24”(series 50/52)and 10”-14”(series 5A/5B) Insert the stem (4) in to the body ensuring that double D of stem aligns with double D of the disc. Install the stem retaining cirlip(17) in to the stem, insert the retaining ring (7) in to the stem (4) and then install the retaining circlip (8) refer fig no 8.6.

8.3.1.7 Fit the notch plate (9) on the mounting flange with the notches in the first quadrant of the valve top plate with the stop tabs at the 12 O' clock and 3 O' clock position (fig 8.7).

8.3.1.8 Fit the lever (14) so that the lever fully engages in the notches when the lever latch is released and tighten the handle lock bolt (13).

8.3.1.9 Press the handle lever latch and position the disc so that the valve is in the fully closed position. Align the last notch on the notch plate at the 3-o clock position with the handle lever and tighten the notch plate screws.

8.3.1.10 Press the handle lever latch and position the disc so that the valve is in the fully open position and release the lever. The lever should line up with the last notch on the notch plate at the 12-o clock position.

8.3.2 VALVES OPERATING WITH GEAR OPERATOR.

(Refer Table 1 of Section –9 & Exploded View No. 10.1)

8.3.2.1 Follow the points from 8.3.1.1 to 8.3.1.5.

8.3.2.2 Rotate the valve disc to the fully open position.

8.3.2.3 Rotate the gear operator to the fully open position.

8.3.2.4 Line the valve stem with gear operator bore and slide the gear operator (15) onto the valve with the hand wheel (16) to the right of the valve name plate.

8.3.2.5 Position the gear operator so that the tapped holes in the bottom of the gear operator line up with the valve top mounting holes and install the mounting bolts.

8.3.2.6 Loosen the gear operator travel stops and rotate the handwheel until the valve is in the fully closed position. Tighten the travel stop on the right hand side of the gear operator.

8.3.2.7 Rotate the hand wheel until the valve is in fully open position. Tighten the travel stop on the left-hand side of the gear operator.

8.3.2.8 Make 2-3 cycles of the valve from fully open position to the fully closed position to make sure that the stops are set correctly.

9 Recommended Spares Kit.

10 Before the start of the repair operations, we recommend that one set of spares as given in the table below should be available.

For normal operation (2 years), we recommend one set of spares be available at site.

9.1 List of Recommended Spare Parts		
Table no 1.		
Part Name	**Part No.**	**Qty. (Nos.)**
Seat	2	01
Bushing	6	01
U cup seal	5	01
Circlip	8	01

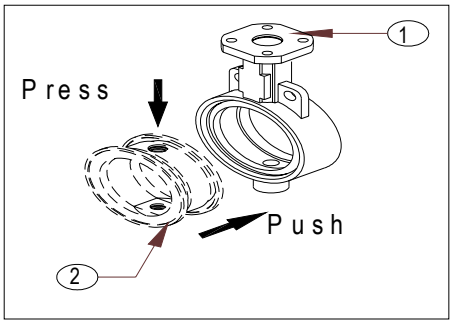

Fig 8.4

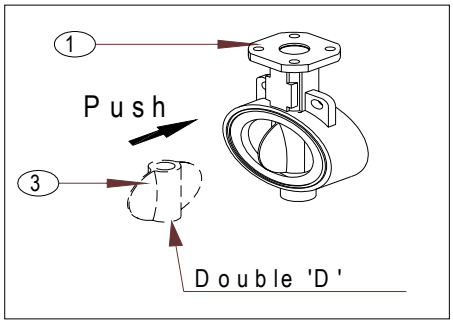

Fig 8.5

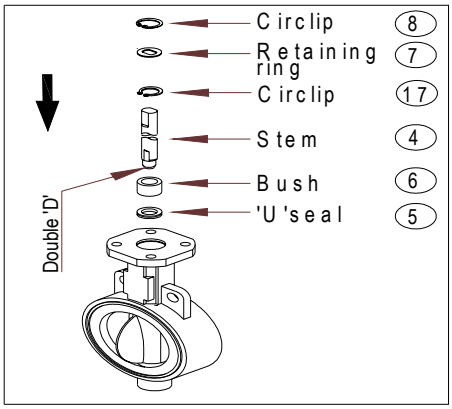

Fig 8.6

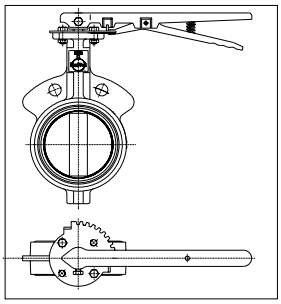

Fig 8.7 Notch plate position.

10. Exploded View

Exploded View Fig No: 10.1

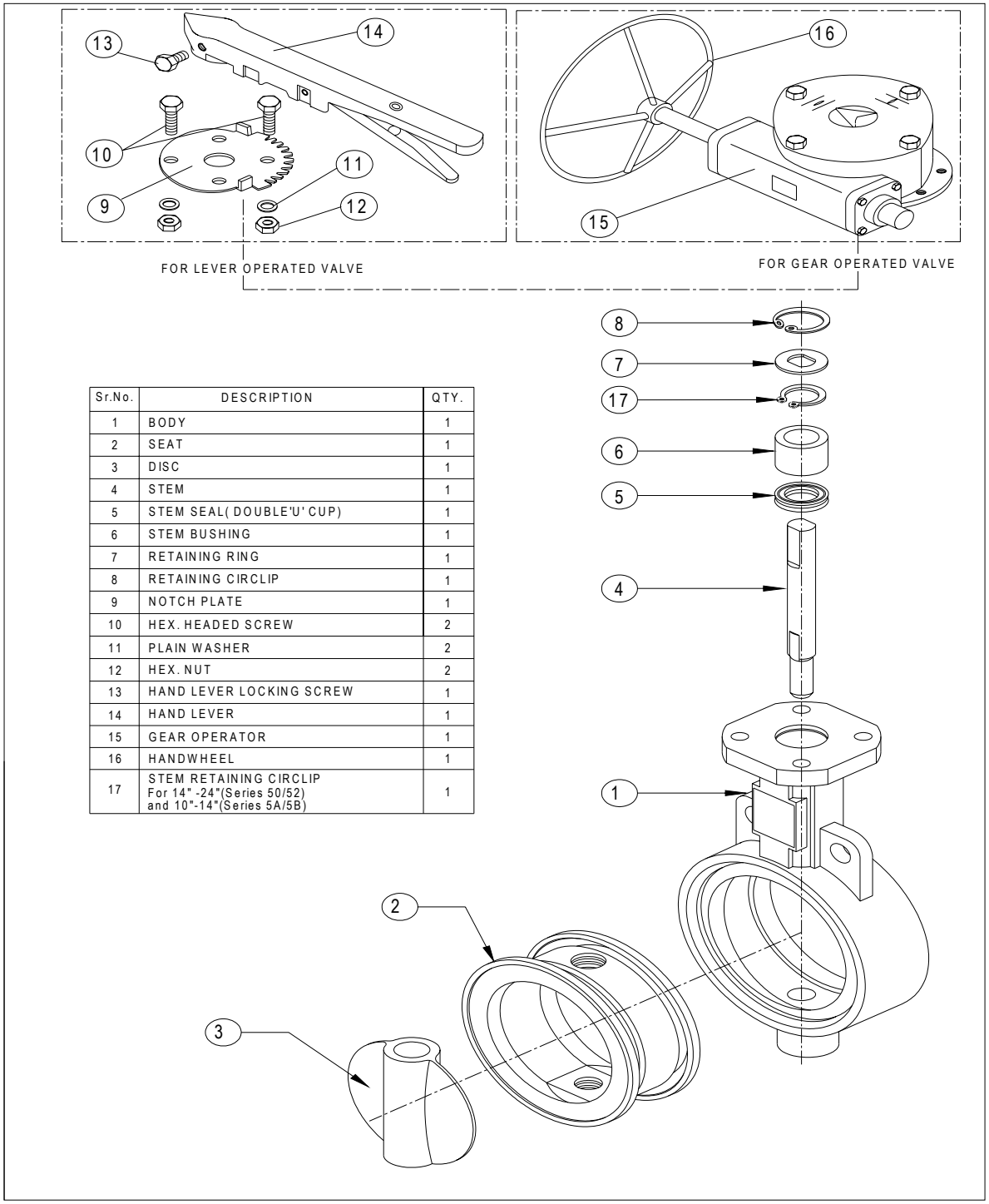

Sr.No.	DESCRIPTION	QTY.
1	BODY	1
2	SEAT	1
3	DISC	1
4	STEM	1
5	STEM SEAL(DOUBLE'U' CUP)	1
6	STEM BUSHING	1
7	RETAINING RING	1
8	RETAINING CIRCLIP	1
9	NOTCH PLATE	1
10	HEX. HEADED SCREW	2
11	PLAIN WASHER	2
12	HEX. NUT	2
13	HAND LEVER LOCKING SCREW	1
14	HAND LEVER	1
15	GEAR OPERATOR	1
16	HANDWHEEL	1
17	STEM RETAINING CIRCLIP For 14" -24"(Series 50/52) and 10"-14"(Series 5A/5B)	1

Troubleshooting:

Symptom	Cause	Corrective Action
Stem Leaks	Stem seal in seat is leaking	Replace stem sealing as described in disassembly & assembly.
Valve leaks at closed position	Seat is worn or damaged	Replace seat as described in disassembly & assembly.
	Disc edge is worn or damaged.	Consult factory for potential application problem.

Absorption Silencers

L21

Application

Silencing of intake and discharge of centrifugal compressors in areas requiring standard silencing.

Design

This silencer employs a perforated tube surrounded by acoustic absorption material at a controlled density to achieve silencing. Exterior shell retains acoustical pack and reflects noise back into pack to achieve maximum noise reduction. Designed for very low pressure drop and long service life. They can be installed either in vertical or horizontal position.

Construction

All welded sheet and plate steel. Absorption material appropriate for operating conditions. Exterior surfaces are prime coated. Flanges are drilled to match 125 lb. American Standard Flanges. Side connections, mounting brackets, or special paint available at extra cost.

Typical Attenuation Curve

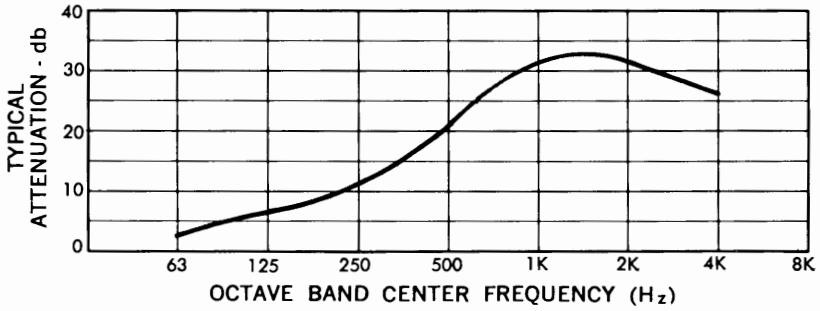

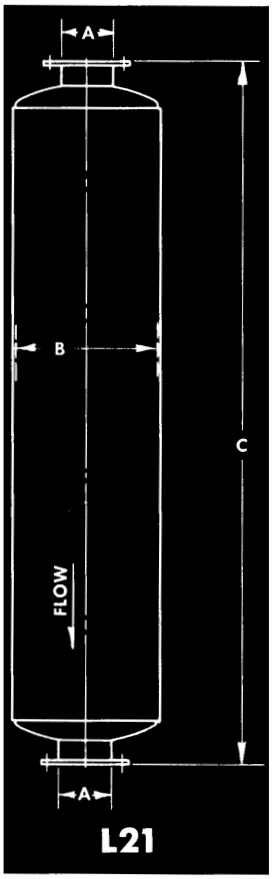

Model	A	B	C	Wt.
L21-½	½*	3¼	10	2
L21-¾	¾*	3¼	13	3
L21-1	1 *	3¼	16	4
L21-1½	1½*	4½	23	8
L21-2	2 *	5	34½	13
L21-2½	2½*	6	35½	18
L21-3	3 *	6½	43½	28
L21-3½	3½*	8	44	37
L21-4	4	10	53	55
L21-5	5	12	56	70
L21-6	6	12	66	90
L21-8	8	14	58	138
L21-10	10	16	70	160
L21-12	12	18	80	250
L21-14	14	20	92	300
L21-16	16	22	107	340
L21-18	18	24	116	650
L21-20	20	26	128	705
L21-22	22	28	147	885
L21-24	24	30	152	1026

*NPT Connections

Section 3 - Oil/Water Separator System

- Hydro Quip Model AGM-2SS-73V-1H-IP Oil Water Separator Operation & Maintenance Manual
- Goulds Model 1ST1G5A4 Transfer Pump Specifications
- Goulds Series NPE Transfer Pump Installation, Operation & Maintenance Instructions
- Gorman-Rupp Model GMC 1DC3 Product Pump Specifications
- Gorman-Rupp Product Pump Installation, Operation & Maintenance Manual
- McMaster-Carr 55 Gallon Product Tank Specifications
- Grainger Model 6YG06 65 Gallon Overpak Drum Specifications
- McMaster-Carr Model 1206K81 Carbon & Vent Flame Arrester Specifications

HYDRO QUIP, INC.

Water Treatment Equipment

OIL WATER SEPARATOR OPERATION AND MAINTENANCE MANUAL

for

Solutia Krummrich

Model AGM-2SS-73V-1H-IP

PURCHASE ORDER # B26998-12936

Bisco Environmental, Inc.

Taunton, MA 02780

108 Pond Street· Seekonk, MA 02771
Phone 508-399-5771 · Fax 508-399-5352

Table of Contents

SECTION

1.0) INTRODUCTION

2.0) SYSTEM DESCRIPTION AND REQUIREMENTS

3.0) SAFETY AND ENVIRONMENTAL CONSIDERATIONS

4.0) INSPECTION AND OFF LOADING

5.0) SYSTEM INSTALLATION

6.0) SEPARATOR SET UP AND START UP PROCEDURE

7.0) QUALITY ASSURANCE

8.0) MAINTENANCE PROCEDURES

9.0) TROUBLESHOOTING

10.0) MECHANICAL INFORMATION
- **a) OWS GENERAL ARRANGEMENT DRAWING**
- **b) OWS INSTALLATION DRAWING**

11.0) WARRANTY

1.0) INTRODUCTION

Hydro Quip, Inc. (HQI) Oil Water Separator (OWS) Model AGM-2SS-73V-1H-IP will remove essentially all free and dispersed, non-emulsified oil, and settleable solids from the oil water mixture at a flow rate of 30 GPM at a temperature of 55 degrees F. The design utilizes the difference in specific gravity between oil and water (buoyancy force) enhanced by the use of 8 cubic feet of HD Q-PAC coalescing plates. The separator is designed to receive oily water by gravity/pumped flow that will not mechanically emulsify the oil and will process it on a once through basis. The tank will be a single wall, rectangular unit installed above grade. It will be constructed of stainless steel. The HD Q-PAC coalescing plates are manufactured of UV-Resistant Polypropylene material.

2.0 SYSTEM DESCRIPTION AND REQUIREMENTS

2.1 *FABRICATION:* The oil water separator is a special purpose prefabricated parallel corrugated plate, rectangular, gravity displacement, type oil water separator. The separator shall be comprised of a tank containing an inlet compartment, separation chamber, sludge chamber, and clean water outlet chamber.

2.2 *TANK:* The tank shall be a single wall construction of 12 gauge stainless steel conforming to ASTM A240, type 304 stainless steel. Welding will be in accordance with AWS D1.1 to provide a watertight tank that will not warp or deform under load. Pipe connections to the exterior shall be as follows:

2.2.1 *PIPE CONNECTIONS*: All connections 3” and smaller are FNPT couplings. All connections 4“ and larger are flat face flanges with ANSI 150 pound standard bolt circle. Use flanged piping connections that conform to ANSI B16.5.

2.3 *SEPARATOR CORROSION PROTECTION*: (For Carbon Steel Only) after shop hydrostatic test has been successfully completed, a coating system will be applied to the interior and exterior surfaces of the separator. Interior and exterior shall be sandblasted to SSPC-SP10 & SSPC-SP6; Interior lined with Tnemec Series 61 liner to 9 mils MDFT; Exterior coated with polyamide epoxy to 6 mils MDFT.

2.4 *LIFTING LUGS*: The tank shall be provided with properly sized lifting lugs for handling and installation.

2.5 *COVERS:* The tank will be provided with vapor tight covers for vapor control. Gas vents and suitable access openings to each compartment will be provided. The covers shall be constructed of marine grade aluminum and will be fastened in place. A gasket shall be provided for vapor tightness. 3/8-16 bolts and threaded knobs will be provided for cover attachment.

2.6 *INLET COMPARTMENT*: The inlet chamber shall be comprised of a non-clog diffuser to distribute the flow across the width of the separation chamber. The inlet compartment shall be of sufficient volume to effectively reduce influent suspended solids, dissipate energy and begin separation. The media will sit elevated on top of a sludge baffle. The sludge baffle will be provided to retain settleable solids and sediment from entering the separation chamber.

2.7 *SEPARATION CHAMBER*: The oil separation chamber shall contain HD Q-PAC Coalescing Media containing a minimum of 132 square feet per cubic foot of effective coalescing surface area. The medias needle like elements (plates) shall be at 90 degrees to the horizontal or longitudinal axis of the separator. Spacing between these elements shall be spaced 3/16” apart for the removal of a minimum of 99.9% of free droplets 20 micron in size or greater. The elements are positioned to create an angle of repose of 90 degrees to facilitate the removal of solids that may tend to build up on the coalescing surfaces, which would increase velocities to the point of discharging an unacceptable effluent. Laminar flow with a Reynolds Number of less than 500 at a maximum designed flow rate shall be maintained throughout the separator packed bed including entrance and exit so as to prevent re-entrainment of oils with water. Flow through the polypropylene coalescing media shall be crossflow perpendicular to the vertical media elements such that all 132 square feet/cubic foot of coalescing media is available for contact with the coalescing surfaces. None of the coalescing media surfaces shall be pointing upward so as not to be available for contact with the crossflowing oily water. The media shall have a minimum of 87% void volume to facilitate sludge and dirt particles as they fall off the vertical elements and settle in the sludge compartment. The media when installed in crossflow OWS shall meet US EPA Method 413.2 and also European Standard 858-1.

2.8 *BAFFLES:* An oil retention & underflow weir, and overflow weir. Position underflow weir to prevent resuspension of settled solids.

2.9 *SLUDGE CHAMBER*: The sludge chamber shall be located prior to and under the coalescing compartment for the settling of any solids. It shall also prevent any solids from entering the clean water chamber.

2.10 *OIL SKIMMER*: The oil separation chamber will be provided with a rotatable pipe skimmer for gravity decanting of the separated oil to a 14 gallon internal product storage tank.

2.11 *CLEAN WATER CHAMBER:* The tank will be provided with a 90 gallon clean water chamber that allows the water to leave the separator by pumped flow through the clean water outlet port.

2.12 VENTS: 2" vents will be provided for vent piping to atmosphere.

3.0 SAFETY AND ENVIRONMENTAL CONSIDERATIONS

3.1 All normal safety precautions should be taken with this equipment to prevent accidents and fires.

3.2 Normal fire prevention measures must be taken to prevent fire danger from separated oil.

3.3 Care should be taken to keep the area around the separator clean to prevent accidents.

3.4 Disposal of the separated oil and solids, which may contain hazardous material, must comply with the regulations of the authority having jurisdiction.

3.5 Safety and environmental protection are the responsibility of the user. HQI assumes no liability for misuse of this separator or for use outside the purpose for which it is designed.

4.0 INSPECTION AND OFFLOADING

4.1 *INSPECTION*: Inspect the oil water separator upon delivery for any damage, which may have occurred in shipment. Areas most susceptible to damage are connections and cover openings. If the separator is damaged, HQI should be notified immediately. The off loading personnel should note the extent of damage and sign and date the bill of lading. A claim should be filed with the delivering carrier.

4.2 *OFF LOADING*: The separator must be carefully removed from the truck so the unit is not damaged. Components for the separator are often supplied in a separate carton. Proper rigging practices should be observed at all times. Hoisting equipment operators should attach a guide line to prevent the separator from swinging out of control. Do not drop the separator or allow it to fall hard in the process of inverting, turning, or moving. Do not slide the separator.

4.3 *COATINGS*: All damaged coatings should be touched up immediately ! Please contact the factory if more specific information is required. Under no conditions should chains or cables be put around the separator. Use spreader bars, and the lifting eyes on the unit.

4.4 *STORAGE*: If the equipment is not to be installed at the time of delivery, it should be stored in an area away from traffic. The ground should be level and free sharp objects that might damage the coatings. All equipment should be stored off the ground on timbers. All factory packing should remain intact until the unit is ready for installation. Equipment should be stored indoors. If not, care should be taken that tanks do not fill up with water and debris. Covering all of the equipment with a tarp is strongly recommended.

5.0 SYSTEM INSTALLATION

When placing the separator for system operation, be sure it is installed in a concrete foundation, which provides adequate support under full load operating conditions. Even if a mounting skid is used, a concrete pad or other properly designed structure must be installed as a foundation. The length and width of this pad are dependent upon the footprint of the unit. Thickness of the concrete pad depends on local soil and frost conditions. A local qualified civil engineer should be contacted to determine these dimensions.

5.1 *FOR EQUIPMENT SUBJECT TO TRAFFIC LOADS*

1. A concrete slab must be installed around the equipment if the separator is going to be subject to traffic loads. It should be designed to carry the load and transmit the load into adjacent, undisturbed soil, not onto the tank side walls!
2. If a concrete pad is not installed and the equipment is subject to traffic loads, deformation or in some cases total collapse of the equipment may occur. HQI cannot be held responsible for equipment subjected to such loads!

5.2 *LEVELING*

1. At this point the equipment should be set exactly in place and the anchor bolts should be installed.

2. Remove any lids.

3. The tankage should now be made as level as possible. The absolute minimum requirements being, within +/- 1/16“ per foot from inlet to outlet end of tank and +/- 1/16” per foot from side to side, maximum of +/- 1/4“ total. Shim the tank, if necessary, until these parameters are met. We recommend the use of stainless steel shim stock. When installing shims, make sure to locate them under all vertical tank supports.

NOTE: We cannot stress enough the leveling process. It is better to invest a little time at this point than to try to correct an improperly leveled tank later. A level installation functions better, has a better appearance and will give you fewer problems in the future.

The next step toward system start involves the plumbing and electrical connections. Any valves and/or piping should be adequately supported and accepted piping and valve practices must be followed for proper system

operation. Any pump or level probe wiring and conduit connections should be made at this time. If the unit includes internal level detection, insert the level detection probe into the port indicated on the drawing. Be sure to lower the probe to the correct level indicated on the drawing.

PLUMBING

1. When making connections to the equipment do not use the equipment as a pipe support. All plumbing should stand on its own if disconnected from equipment. HQI cannot be held responsible for damage caused by using this equipment to support your plumbing.

2. Connections do not have to be made in the order listed below. Review your situation and make the connections in the most convenient order for your particular application.

3. Connect the outlet plumbing. The effluent plumbing must be the same size or larger than the nozzle size of the equipment. Do not reduce the size of the effluent piping as this might cause hydraulic overloading of the equipment. Also, try to run the discharge piping through as few changes as possible, as short a distance as possible and at a pitch of not less than 1/16” per foot. On gravity flow units it may be necessary to vent exterior piping to prevent air locks in discharge pipe.

4. Connect the inlet plumbing. The influent must be the same size or smaller than the nozzle size on the equipment. Do not increase the size of the influent piping as this might cause hydraulic overloading of the equipment. Also, the pitch of the pipe should not exceed 1/16" per foot.

5. On most units, vents will have been provided. These vents have been supplied to prevent air locks during surge conditions. For both indoor and outdoor applications the vents should be run to a location where noxious and sometimes volatile gas would pose no hazard. Follow all applicable fire codes with regards to size of vent pipe.

Warning: Do not plug or otherwise obstruct air flow through the vents. Obstructing air flow through the vents could damage the unit and/or create a hazardous condition.

6.0 SEPARATOR SET UP AND START UP PROCEDURES

6.1 *SEPARATOR SET UP PROCEDURES*:

The inlet flow to the separator must be by gravity or a positive displacement pump upstream. Centrifugal pumps greatly agitate the oil and water and tend to make a stable emulsion that is very difficult, if not impossible, to separate by gravity settling.

Separator flow should be controlled upstream to ensure even, steady flow, and stable conditions in the separator. Unstable flows tend to reduce efficiency and may cause high oil concentration at the outlet.

6.1.1 The separator tank is atmospheric in design and must be vented to the atmosphere. Consult the OWS drawing for location of all vents.

6.1.2 To achieve the desired flow, excessive throttling of the input must be avoided as this will also cause emulsification of the oil, adversely effecting separator performance. Especially avoid the use of globe type or other valves with high-pressure drops.

6.1.3 It is recommended that the effluent water flows by gravity flow from the separator. The pressure loss for the water effluent pipe shall not exceed the drop elevation of the customer lines. External piping should be separately supported. The separator is not designed to support piping.

6.1.4 To install the separator, follow these steps:
(Please refer to attached installation drawing)

1. Ensure that the source of the water to be treated is properly regulated and not provided with a centrifugal pump or other device, which will cause emulsification such as a high-pressure drop valve.

2. Ensure that the separator is securely installed per installation drawing.

6.2 *SEPARATOR START-UP PROCEDURES*:

6.2.1 Initial start-up.

This procedure is to be followed after the installation of the separator or after the separator has been drained for maintenance and is ready to be restarted.

1. Ensure that the owner supplied upstream influent flow regulating valve is closed.

2. Before starting the flow to the unit, remove the coalescer access cover and ensure that the HD Q-PAC packs have not shifted and are securely fastened. The separator should contain plate packs, polishing pack and adjustable oil skimmer pipe tube. (Slot of skimmer to be turned upward away from water)

3. Ensure that there are not obstructions in the water outlet piping.

4. With the coalescer access cover off, fill the tank with clean water, establishing flow from the effluent opening. Check for leaks, both external and internal remedy any found.

5. Allow the influent oil water mixture into the OWS tank.

6. Replace the coalescer access cover and bolt down liquid tight.

6.2.2 Normal operation:

Carefully maintain flow at the rate set when flow was established. Once a sufficient quantity of oil has accumulated in the separator, turn the slot of the skimmer into the oil layer (The oil will then be decanted into an integral oil storage compartment or to a separate tank outside of the separator). Disposal of the oil must comply with regulations of the authority having jurisdiction.

7.0 QUALITY ASSURANCE

7.1 *INSPECTION*: Examine each component of the separator for compliance with requirements indicated in Section 2 - System Description & Requirements. This element of inspection shall encompass visual examination.

7.2 *PRETEST PROCEDURES*: After separator has been leveled, hydrostatically test unit for (4) hours by filling full with potable water, provided by customer, with means of getting it from the nearest source by the installer. Acceptance criteria for this test is no leakage after four (4) hours.

7.3 *TESTS*: - After hydrostatic test has been successfully completed and unit has been properly connected to influent and effluent piping, allow influent oil water mixture of 100 ppm, to flow into separator filled with potable water. After injection, operate unit for a minimum of ten tank volume changes prior to testing for contaminant removal.

7.4 *TEST FOR CONTAMINANTS*: The installer shall test the effluent to ensure that it meets oil concentration levels described in Section 2 - System Description & Requirements. Test shall be performed by an independent certified testing laboratory.

7.5 *ANALYTICAL METHODS:* Test and sample preservation methods for test contaminants shall be in accordance with the latest revision of EPA Methods for Chemical Analysis of Water and Wastes. Effluent oil concentration shall be measured by gravimetric, Separatory Funnel Extraction Method API 413.1.

8.0 MAINTENANCE

8.1 The separator should be checked periodically to determine if excessive amounts of solids and debris have accumulated. If this happens the solids may accumulate enough to plug the lower part of the HD Q-PAC plates. In this case, efficiency will be reduced and oil in the outlet water may exceed specified effluent limits.

8.2 After the first 6 months of operation, the inlet area should be inspected and cleaned as follows:

1. Stop the flow of influent to the separator.
2. Remove separator cover.
3. Dispose of separated oil per regulatory procedures.
4. Remove water from separator through drain or hose.

8.3 Measure and record the depth of the solids. Use this measurement as the timing basis for the next solids inspection and clean out. Consult OWS drawing for depth of sludge baffle. Solids should not exceed this depth.

8.4 The HD Q-PAC plates can be either cleaned in place or removed and cleaned .

1. For cleaning in place, connect a pressure water hose (1-15 psig) and insert in plate spacing on top of the plate packs. As the water flushes the dirt out of the plate packs it should be removed by the vacuum hose.

2. For removing plate packs outside of separator. Flush with garden hose (10-15 psig) over an area to prevent discharge of flushed water into groundwater. It is only necessary to remove all sludge from between the plates and any very heavy oil coating.

8.5 Examine tank interior for damage and repair any damage to internal coating.

8.6 To restart separator, reinstall HD Q-PAC plate packs and polishing pack in original position. Make sure that both are securely in place so that they do not float when unit is operational.

8.7 For start up, repeat steps in section 6 of these instructions.

9.0 TROUBLESHOOTING

Regularly monitor the quality of the effluent leaving the separator. If any loss in effluent quality is observed, steps should be taken to correct the problem immediately. Some things to check if effluent quality has deteriorated are:

1. Have you exceeded the separators rated flow? If so, return the flow rate to the design flow rate.

2. Have you allowed the sludge to accumulate to a point where it has started to affect the performance of the separator? If so, take steps to have the sludge removed immediately. If it cannot be pumped out, you will have to drain the separator and remove the accumulated sludge.

3. Check the influent for surfactants or chemical emulsifiers. If any are present, you may need additional treatment in order to meet discharge requirements.

4. Are you pumping into the separator? If so, you may be mechanically emulsifying the influent oil. Sample the oil water from both before and after the pump. There should be no differences between the two samples. If you are mechanically emulsifying the oil you may have to change your influent pump to a low RPM positive displacement pump or similar pump that will cut down on shearing.

5. Check to make sure that the oil depth in the separator is not too great, a deep layer of product will reduce the efficiency of the separator. Free product should be removed and the separator put back in service.

9.1 TROUBLESHOOTING GUIDELINE

PROBLEM	POSSIBLE CAUSE	DIAGNOSTIC TECHNIQUE	CORRECTIVE ACTION
EFFLUENT CONCENTRATION TOO HIGH	Oil Concentration too Great for Design	Sample Influent	Decrease the Flow Rate
	Flow Too Great For Design	Check Flow	Decrease the Flow Rate
	Plates Blocked	Inspect, Remove Plates if Necessary	Clean Per Par. 8.4 Instructions and Reinstall.
	Solids have Accumulated Into Coalescer Plates	Check Depth of Solids In Coalescer Compartment	Remove Solids From Compartment See Par. 8.3.
TANK IS OVERFLOWING	Output Line Restricted	Check Flow	Remove Restriction

Note: For proper operation, outlet line should be as large as outlet nozzle unless unit is to be operated at very large flows.

ITEM	QTY	DESCRIPTION	ITEM	QTY	DESCRIPTION
1	1	2" FNPT INLET	8	1	REMOVABLE COVER
2	1	2" FNPT OUTLET	9	1	OIL STOP WEIR
3	1	2" FNPT OIL OUTLET	10	1	ADJ. OVERFLOW WEIR
4	2	2" FNPT VENT	11	0	NOT USED
5	4	1" FNPT DRAIN	12	2	1" NPT SIGHT GLASS PORTS
6	1	COALESCING PLATES	13	1	OPTIONAL PRODUCT TANK
7	1	PVC OIL SKIMMER	14	2	2" NPT FOR FLOAT SWITCH

SHIPPING WEIGHT	650 LBS
OPERATING WEIGHT	2103 LBS
SEPARATOR VOLUME	217 GALLONS
EFFLUENT TANK VOLUME	90 GALLONS
SLUDGE VOLUME	4 GALLONS
COALESCING AREA	8 FT^3
OPT. PRODUCT TANK VOL	19 GALLONS

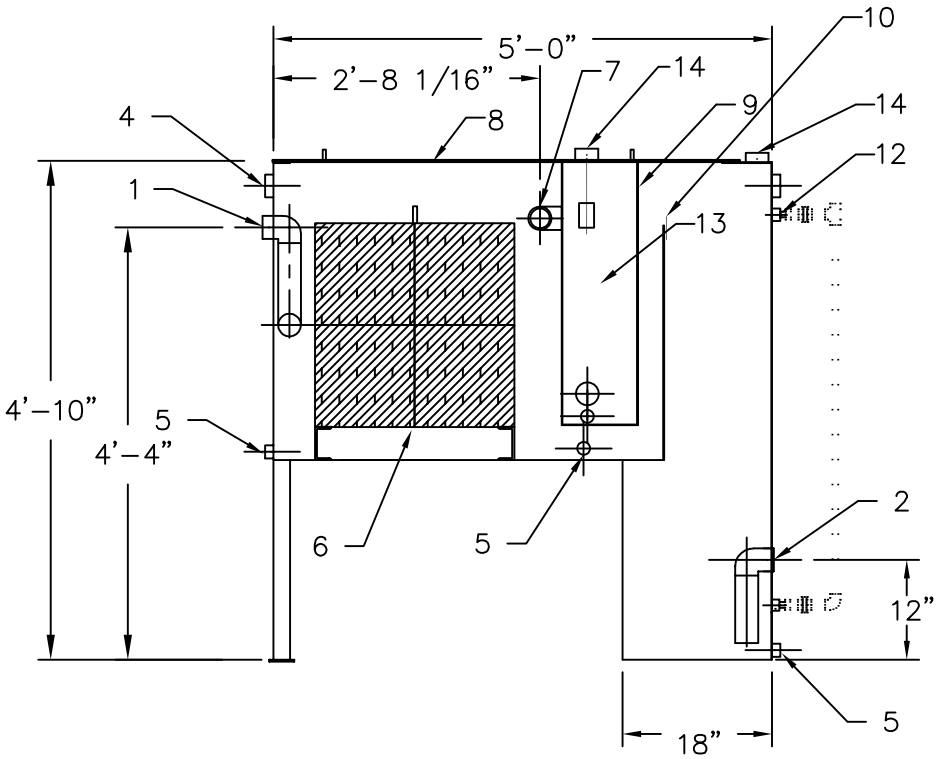

ELEVATION

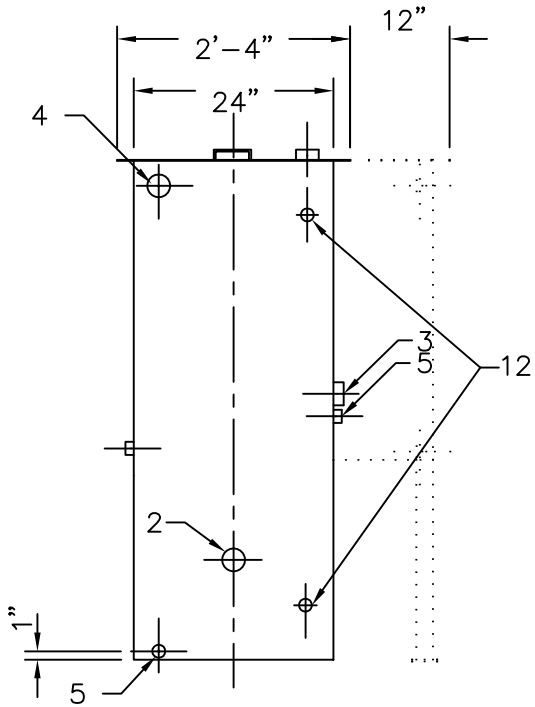

RIGHT SIDE VIEW

NOTES

1. MATERIAL: 12 GAUGE 304SS.
2. GASKET: NEOPRENE.
3. HARDWARE: 18-8 STAINLESS STEEL
4. INTERNAL PIPE SCH 80 PVC

REV.	DESCRIPTION	DATE	INIT.

HYDRO QUIP. INC.

Water Treatment Systems

GENERAL ARRANGEMENT
MODEL AGM-2SS-90V-1H-IP

DRN. BY: PND

CHKD.BY:

PROJECT:

DATE: 08/16/11

REF:

FILE: AGM-2SS-90V-1H-IP

SCALE: 1/2" = 1'

THIS DRAWING IS PROPERTY OF HYDRO QUIP INC. AND MUST NOT BE COPIED, LOANED OR DISTRIBUTED WITHOUT WRITTEN PERMISSION.

REV: 0

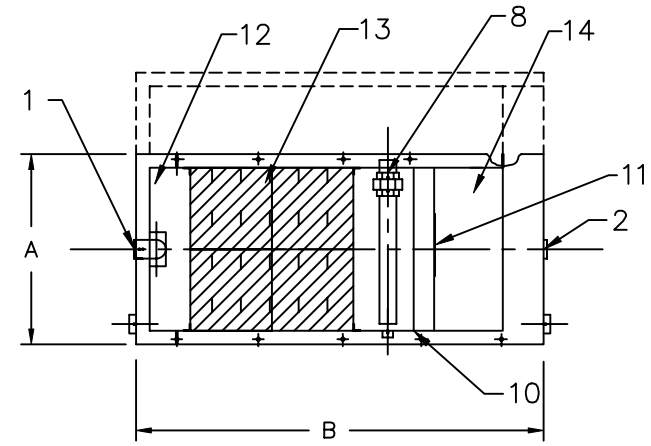

PLAN

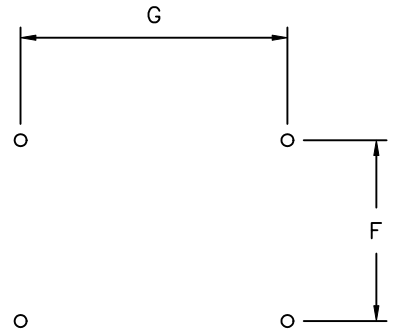

ANCHOR BOLT LAYOUT

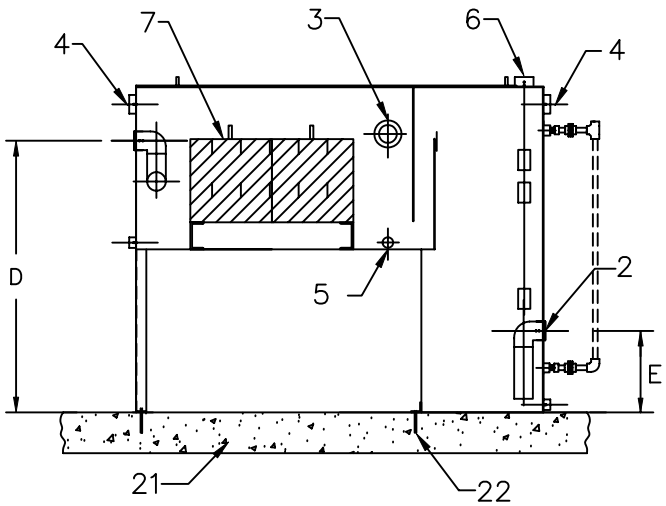

ELEVATION

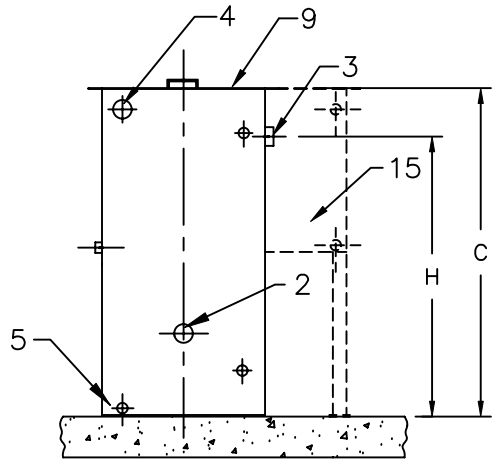

RIGHT SIDE VIEW

ITEM	QTY	DESCRIPTION
1	1	INLET NOZZLE (SEE TABLE)
2	1	OUTLET NOZZLE (SEE NOZZLE)
3	1	OIL OUTLET 2" NPT
4	2	VENT 2" NPT
5	3	DRAIN 1" NPT
6	1	LEVEL SENSOR PORT 2" NPT
7	A/R	PARALLEL PLATE MEDIA
8	1	OIL SKIMMER
9	A/R	VAPOR TIGHT COVER
10	1	OIL STOP WEIR
11	1	OVERFLOW WEIR
12	1	SEDIMENT CHAMBER
13	1	SEPARATOR CHAMBER
14	1	CLEAN WATER CHAMBER
ITEM	QTY	OPTIONAL EQUIPMENT
15	1	OIL RESERVOIR (SEE TABLE)
16	1	LEVEL CONTROLS NEMA ENG
17	A/R	IMMERSION HEATERS
18	A/R	POLISHING MEDIA
19	A/R	INFLUENT & EFFLUENT PUMPS
20	1	OIL PUMPS
ITEM	QTY	CUSTOMER SUPPLIED EQUIPMENT
21	1	CONCRETE PAD
22	A/R	ANCHOR BOLTS
23	A/R	EXTERNAL PIPING

NOTES

MATERIAL:
- 304SS (SS)
- CARBON STEEL (CS)
- INTERIOR TNENEC SERIES 61 LINER TO 9 MILS.
- EXTERIOR POLYAMIDE EPOXY 6 MDFT.

COVER GASKET: NEOPRENE
GASKET: NEOPRENE.
HARDWARE: 18-8 STAINLESS STEEL
SKIMMER SCHEDULE 80 PIPE
CONNECTION ARE NPT FITTINGS
ANCHOR BOLT TO BE 3/8" DIA. MIN. WITH 4" INBEDMENT & 2" PROJECTION

MODEL AGM	INLET OUTLET DIA.	METAL THK.	A WIDTH	B LENGTH	C HEIGHT	D INLET HEIGHT	E OUTLET HEIGHT	F ANCHOR DIM.	G ANCHOR DIM.	H OIL OUTLET HEIGHT	OPTION OIL RES. (GAL.)	CAPACITY (GAL.)	CLEAN WATER CHAMBER CAPACITY	SHIP WEIGHT (LBS)	OPER. WEIGHT (LGS)
1SS-30V	2"	12	16"	60"	48"	40"	12"	10"	40"	41"	60	105	30	245	1085
2SS-60V	2"	12	28"	60"	48"	40"	12"	22"	40"	41"	60	210	60	325	2005
3SS-90V	2"	12	40"	60"	48"	40"	12"	34"	40"	41"	60	279	90	450	2682
1SS-36V-1H	2"	12	16"	60"	58"	52"	12"	10"	40"	53"	90	142	36	273	1409
2SS-73V-1H	2"	12	28"	60"	58"	52"	12"	22"	40"	53"	90	217	73	367	2103
3SS-118V-1H	2"	12	40"	60"	58"	52"	12"	34"	40"	53"	90	325	118	510	3110

REV.	DESCRIPTION	DATE	INIT.

HYDRO QUIP. INC.

Water Treatment Systems

OIL/WATER SEPARATOR
MODEL AGM-SS-V

DRN. BY: PMD
CHKD.BY:
PROJECT:
DATE: 01/20/08
REF:
FILE: AGMSV
SCALE: NONE

THIS DRAWING IS PROPERTY OF HYDRO QUIP INC. AND MUST NOT BE COPIED,LOANED OR DISTRIBUTED WITHOUT WRITTEN PREMISSION.

REV: 0

HYDRO QUIP, INC.

Water Treatment Equipment

LIMITED WARRANTY

Hydro Quip's equipment is warranted as to workmanship, material and performance when properly installed, used, and cared for, and provided that the original design criteria represent actual field data at the time of operation. Should any parts or parts prove defective within twenty-four (24) months from the date of purchase, it will be replaced F.O.B. destination without charge, provided the part (or parts) is returned transportation charges prepaid.

No allowance will be made for labor, transportation, or other charges incurred in the replacement or repair of defective parts by the customer. This warranty does not apply when damage is caused by conditions such as sand or abrasive materials pumped with the fluids, lightning, improper voltage supply, careless handling, improper installation, stray electrical interference, or due to substances or factors that were unknown to Hydro Quip at the time of purchase. Buyer shall have no claim, and no product or part shall be deemed defective, by reason of failure to resist erosive or corrosive action, nor for problems resulting from buildup of material within the equipment.

This warranty applies only to seller's equipment, under use and service in accordance with the seller's written instructions, recommendations and ratings for installation, operating and maintenance, and service. All claims for defective products, parts, or work under this warranty must be made in writing immediately upon discovery and, in any event, within one year of purchase.

This warranty is a *Limited Warranty*, anything in the warranty notwithstanding. Implied warranties for particular purpose and merchantability shall be limited to the duration of express warranty. The manufacturer expressly disclaims and excludes any liability of consequential or incidental damages for breach of any express or implied warranty.

108 Pond Street· Seekonk, MA 02771
Phone 508-399-5771 · Fax 508-399-5352

G&L Pumps

NPE
316L SS

NPE Series End Suction Centrifugal Pumps

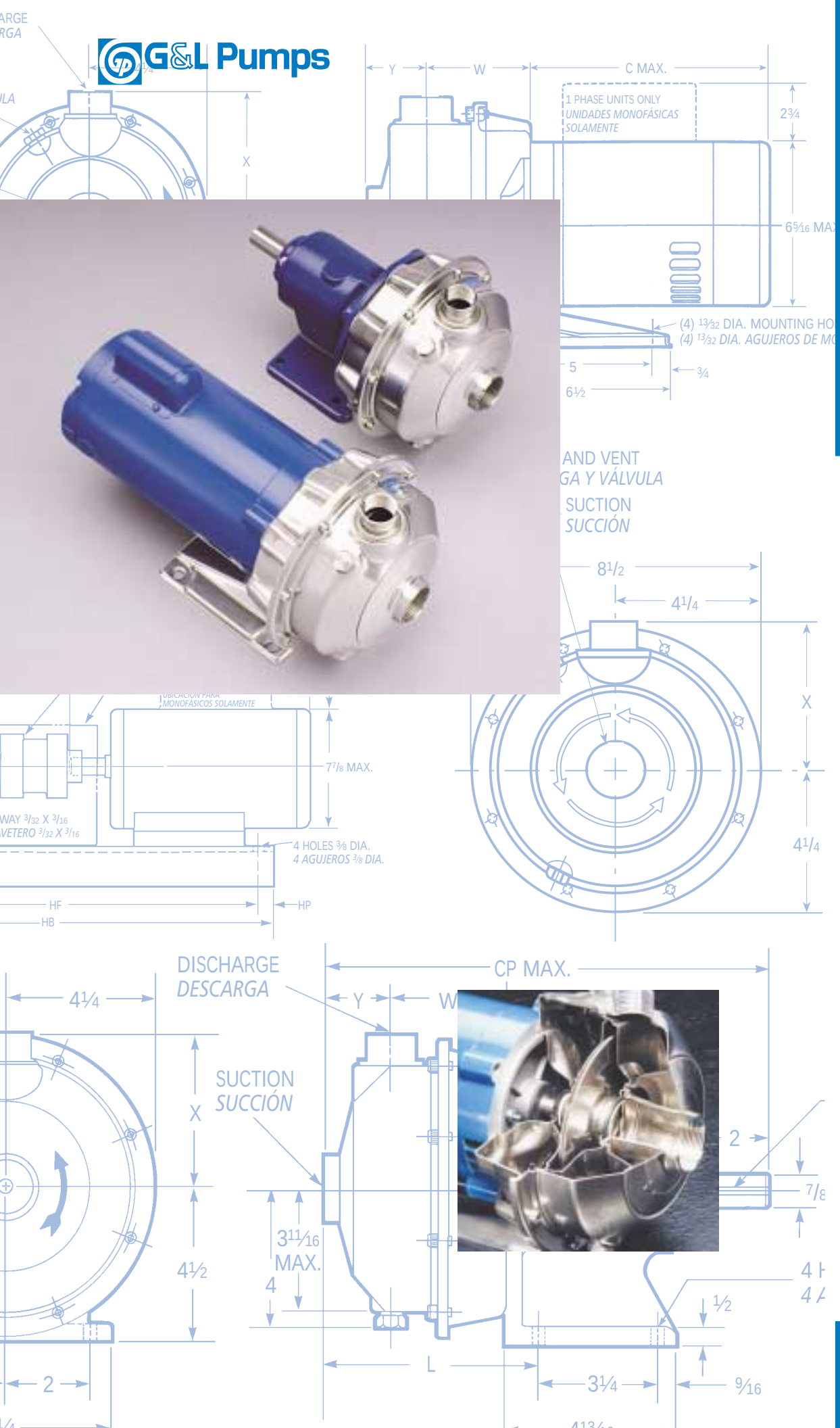

Goulds Pumps

ITT Industries

A Full Range of Product Features
Una Gama Total de Características del Producto

Superior Materials of Construction: Complete AISI 316L stainless steel liquid handling components and mounting bracket for corrosion resistance, quality appearance, and improved strength and ductility.

High Efficiency Impeller: Enclosed impeller with unique floating seal ring design maintains maximum efficiencies over the life of the pump without adjustment.

Casing and Adapter Features: Stainless steel construction with NPT threaded, centerline connections, easily accessible vent, prime and drain connections with stainless steel plugs. Optional seal face vent/flush available.

Mechanical Seal: Standard John Crane Type 21 with carbon versus silicon-carbide faces, Viton elastomers, and 316 stainless metal parts. Optional high temperature and chemical duty seals available.

Motors: NEMA standard open drip-proof, totally enclosed fan cooled or explosion proof enclosures. Rugged ball bearing design for continuous duty under all operating conditions.

Model: 1ST1G5A4

The various versions of the NPE are identified by a product code number on the pump label. This number is also the catalog number for the pump. The meaning of each digit in the product code number is shown at left.

Las diferentes versiones de la NPE se identifican con un número de código del producto en la etiqueta de la bomba. Este número es también el número del catálogo para la bomba. El significado de cada dígito en el número de código del producto se muestra a la izquierda.

NPE Product Line Numbering System
Línea de Producto NPE Sistema de Numeración

Example Product Code,
Ejemplo Código del Producto

1 ST 2 C 1 A 4 F

Seal Vent/Flush Option,
Opción de Sello Válvula/ChorroSeal Ven

Mechanical Seal and O-ring
4 = Pre-engineered standard
For optional mechanical seal modify catalog order no. with seal code listed below.

Sello Mecánico y Anillo 'O'
4 = Estándar aprobado
Para sello mecánico opcional modificar el número de orden del catálogo con el código del sello anotado abajo.

John Crane Type 21 Mechanical Seal (⅝" seal),
Sello Mecánico John Crane Tipo 21 (sello de ⅝")

Seal Code, *Código del Sello*	Rotary, *Rotativo*	Stationary, *Estacionario*	Elastomers, *Elastómeros*	Metal Parts, *Partes Metálicas*	Part No., *Pieza Número*
[redacted]	Carbon	Silicon Carbide	[redacted]	316 SS	[redacted]
4			Viton		10K55
[redacted]	Silicon Carbide		[redacted]		[redacted]
6			Viton		10K62

Impeller Option . . . No Adder Required
For optional impeller diameters modify catalog order no. with impeller code listed. Select optional impeller diameter from pump performance curve.

Código del Impulsor Opcional
Para impulsores con diámetros opcionales modificar el número de orden del catálogo con el código del impulsor anotado. Escoger el impul con diámetro opcional de la curva de funcionamiento de la bomba.

Impeller Code, *Código del Impulsor*	Pump Size, *Tamaño de la Bomba*		
	1 x 1¼ – 6	1¼ x 1½ – 6	1½ x 2 – 6
	Diameter	Diameter	Diameter
K	–	6⅛	–
G	–	5 15/16	5⅜
[redacted]			
A	6⅛	[redacted]	[redacted]
[redacted]			
C	5 3/16	4⅞	4⅜
D	4¾	4⅝	4 1/16
E	4 7/16	4¼	3⅝
F	4 1/16	3⅞	–

Driver, *Conductor*
1 = 1 PH, ODP
2 = 3 PH, ODP
3 = 575 V, ODP
[redacted]
5 = 3 PH, TEFC
[redacted]
7 = 3 PH, XP
8 = 575 V, XP
9 = 3 PH, TEFC
[redacted] Eff.
[redacted]

HP Rating, *HP Potencia*
[redacted] G = 2 HP [redacted]

Driver: Hertz/Pole/RPM,
Conductor: Hercios/Polo/RPM
1 = 60 Hz, 2 pole, 3500 RPM
[redacted]
3 = 60 Hz, 6 pole, 1150 RPM
4 = 50 Hz, 2 pole, 2900 RPM
5 = 50 Hz, 4 pole, 1450 RPM

For frame mounted version, substitute the letters "FRM" in these positions.

Para la versión con el armazón montado, sustituya las letras "FRM" en estas posiciones.

Material
ST = Stainless steel, *Acero inoxidable*

Pump Size, *Tamaño de la Bomba*
1 = 1 x 1¼ – 6 [redacted]

Performance Coverage (60 Hz)

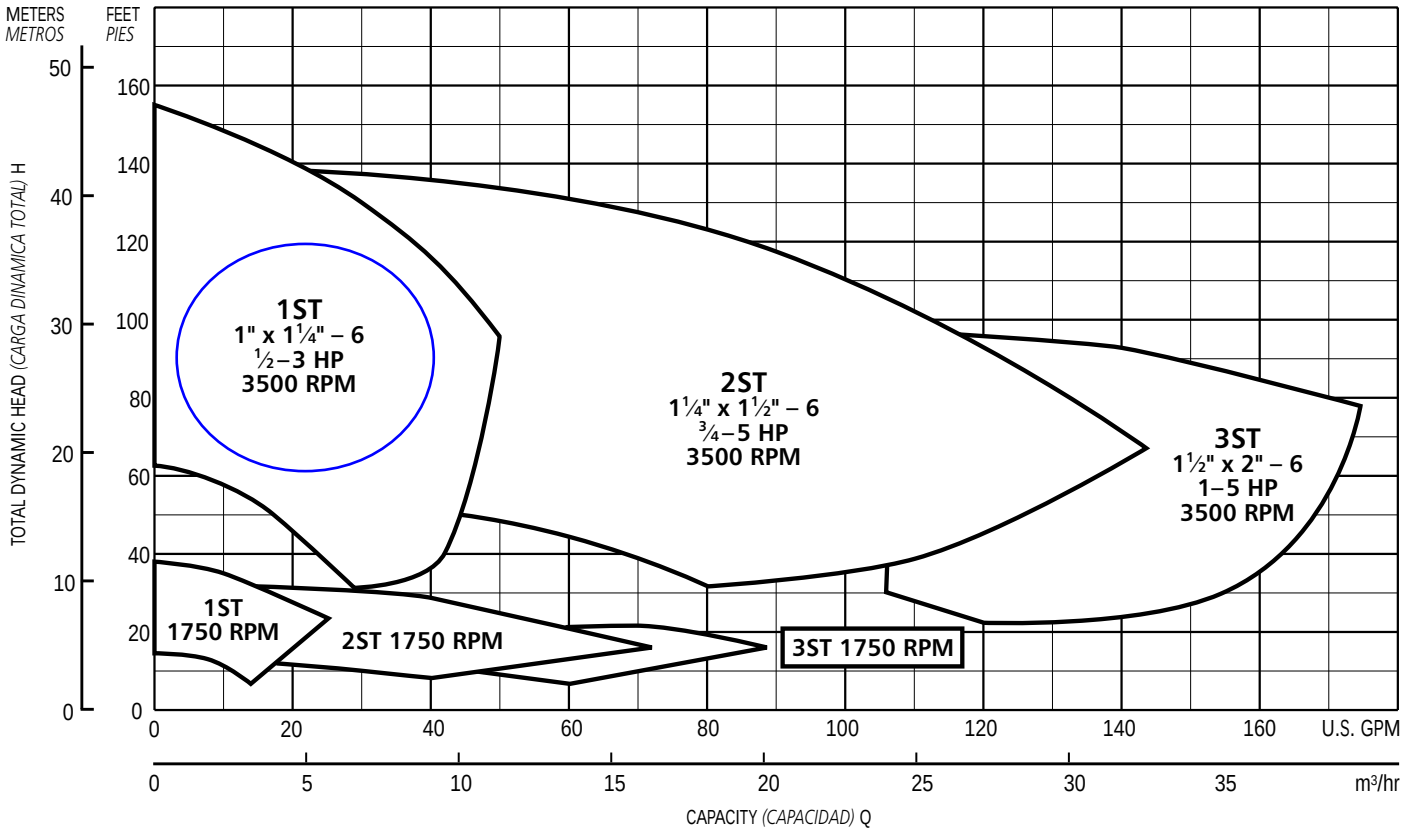

NOTES:

Not recommended for operation beyond printed H-Q curve.

For critical application conditions consult factory.

Not all combinations of motor, impeller and seal options are available for every pump model. Please check with G&L on non-cataloged numbers.

All standard 3500 RPM ODP and TEFC motors supplied by Goulds, have minimum of 1.15 service factor. Standard catalog units may utilize available service factor. Any motors supplied other than Goulds check available service factor.

NPE Close Coupled Pump Major Components: Materials of Construction

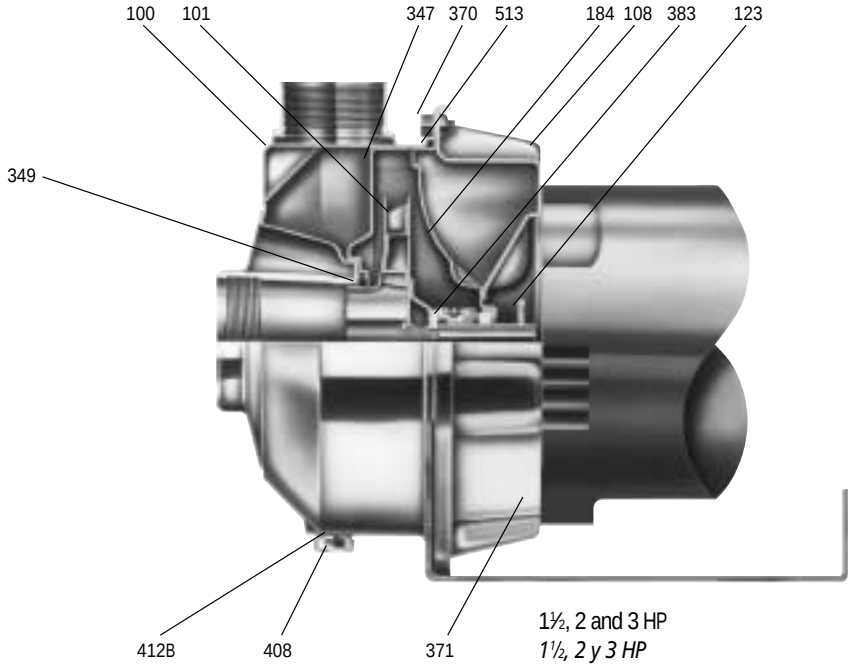

1½, 2 and 3 HP
1½, 2 y 3 HP

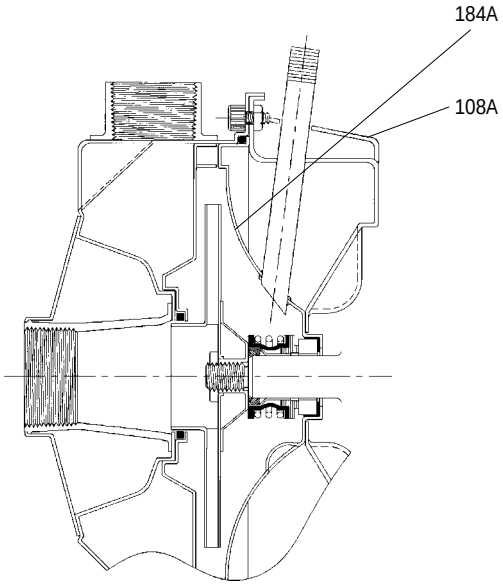

Seal Face Vent/Flush Option,

Item No.,	Description,	Materials,
100	Casing,	AISI 316L SS,
101	Impeller,	
108	Motor adapter,	
108A	Motor adapter seal vent/flush,	
123	Deflector,	BUNA-N
184	Seal housing,	AISI 316L SS,
184 A	Seal housing seal vent/flush,	
347	Guidevane,	
349	Seal ring, guidevane;	Viton
370	Socket head screws,	AISI 410 SS,
371	Bolts, motor;	Plated steel,
383	Mechanical seal,	**see chart
408	Drain and vent plug, casing;	AISI 316L SS,
412B	O-ring, drain and vent plug;	Viton
513	O-ring, casing;	
Motor	NEMA standard, 56J flange;	

½, ¾ and 1 HP
½, ¾ y 1 HP

Footed motor for 1750 RPM and 5 HP ODP and TEFC, all explosion proof see page 13.

Performance Curves – 60 Hz, 3500 RPM
Curvas de Funcionamiento – 60 Hz, 3500 RPM

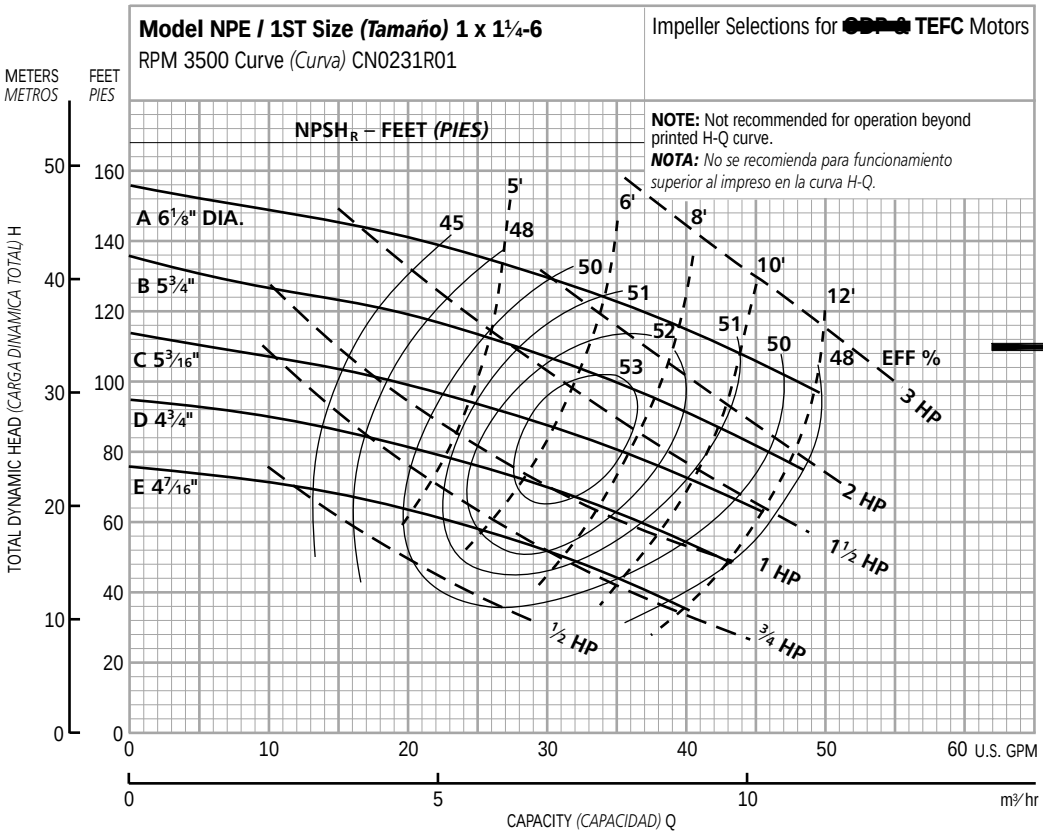

Ordering Code, *Código de Pedido*	Standard HP Rating, *Estándar HP Potencia*	Imp. Dia.
~~E~~	½	~~4⁷⁄₁₆"~~
D	~~¾~~	4¾
~~C~~	1	~~5³⁄₁₆~~
~~B~~	~~1½~~	~~5¾~~
A	2	6⅛

NOTE: Although not recommended, the pump may pass a ¹⁄₁₆" sphere.

NOTA: *Si bien no se recomienda, la bomba puede pasar una esfera de ¹⁄₁₆".*

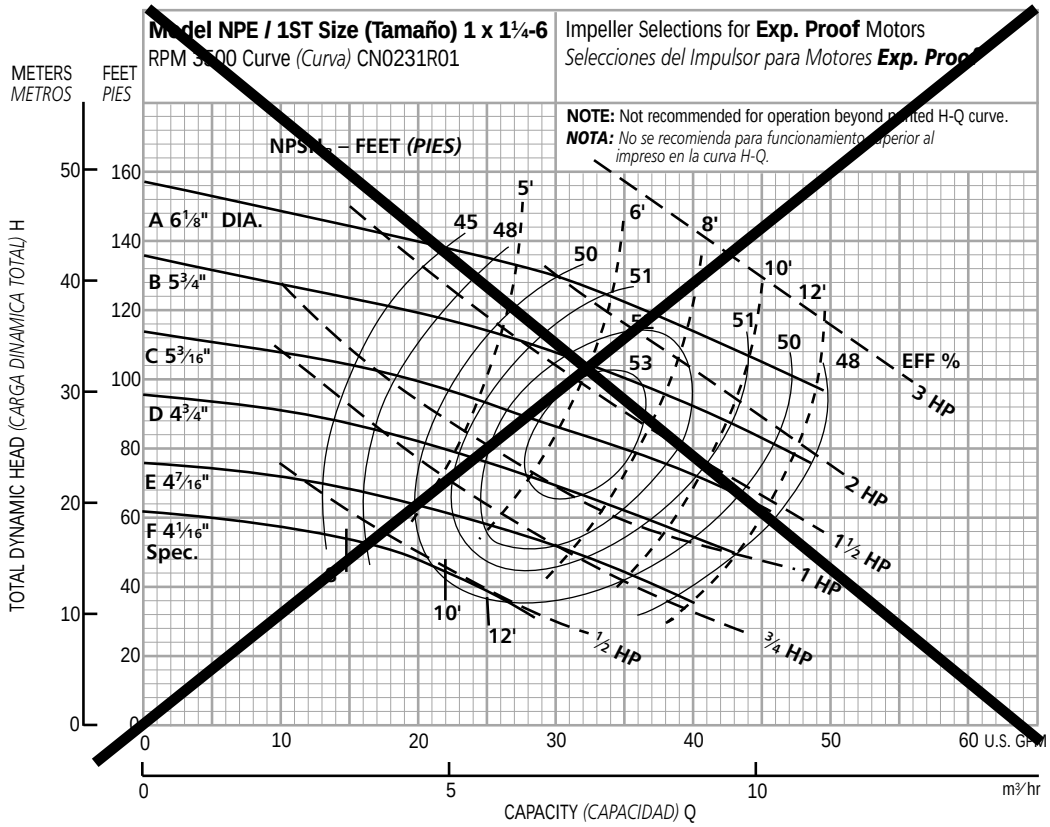

Ordering Code, *Código de Pedido*	Standard HP Rating, *Estándar HP Potencia*	Imp. Dia.
F	½	4¹⁄₁₆" spec.
E	¾	4⁷⁄₁₆
D	1	4¾
C	1½	5³⁄₁₆
B	2	5¾
A	3	6⅛

NOTE: Although not recommended, the pump may pass a ¹⁄₁₆" sphere.

NOTA: *Si bien no se recomienda, la bomba puede pasar una esfera de ¹⁄₁₆".*

NPE Close Coupled – Dimensions, Weights and Specifications
NPE Acople Cerrado – Dimensiones, Pesos y Especificaciones

Clockwise Rotation Viewed from Drive End
Rotación en Dirección de las Agujas del Reloj Visto desde el Extremo del Motor

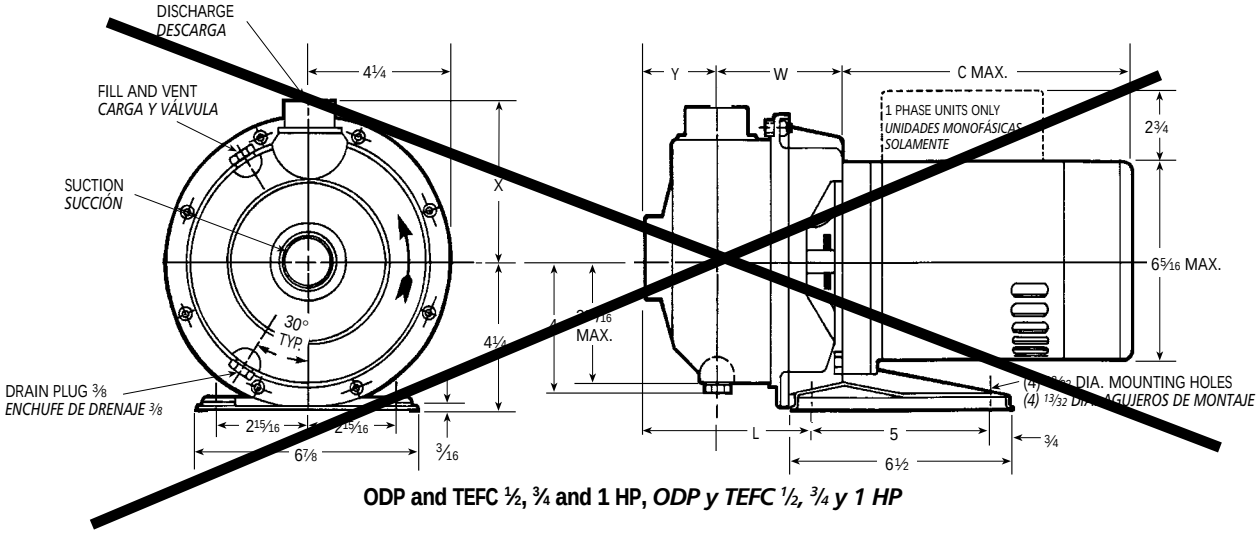

ODP and TEFC ½, ¾ and 1 HP, *ODP y TEFC ½, ¾ y 1 HP*

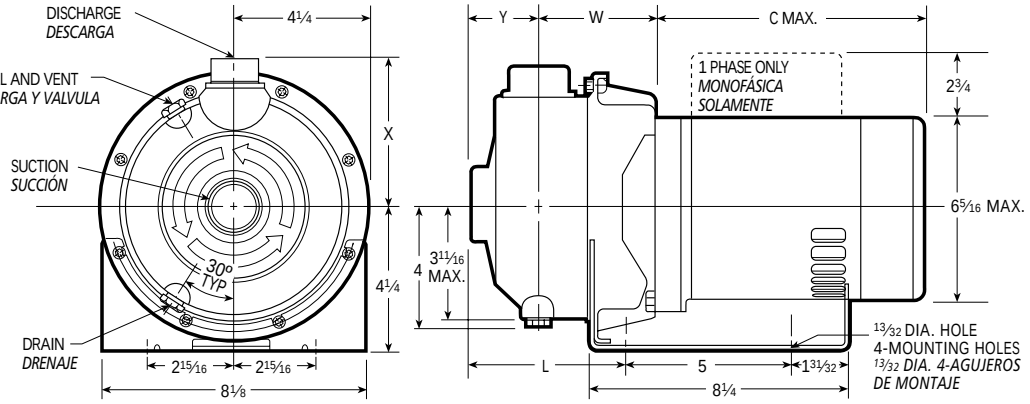

[redacted] TEFC [redacted], 2 [redacted] HP,

Specifications
Especificaciones

Capacities to:
75 GPM (283L/min) at 1750 RPM
150 GPM (550L/min) at 3500 RPM

Heads to:
39 feet (12 m) at 1750 RPM
150 feet (46 m) at 3500 RPM

Working pressures to:
125 PSIG (9 bars)

Maximum temperatures to:
212°F (100°C) with standard seal or 250°F (121°C) with optional high temperature seal.

Direction of rotation:
Clockwise when viewed from motor end.

Motor specifications:
NEMA 56J frame, 1750 RPM, ½ HP. 3500 RPM ½ through 5 HP. Open drip-proof, totally enclosed fan-cooled or 2 HP explosion proof enclosures. Stainless steel shaft with ball bearings.

Single phase: Voltage 115/230 ODP and TEFC. (3 HP model – 230 V only) Built-in overload with auto-reset provided.

Three phase: Voltage 208-230/460 ODP, TEFC and EX PROOF.

NOTE: For three phase motors, overload protection must be provided in starter unit. Starter and heaters must be ordered separately.

Capacidades:
75 GPM (283L/min) a 1750 RPM
150 GPM (550L/min) a 3500 RPM

Cargas:
39 pies (12 m) a 1750 RPM
150 pies (46 m) a 3500 RPM

Presión de trabajo:
125 PSIG (9 baras)

Temperatura máxima:
212°F (100°C) con sello estándar o 250°F (121°C) con sello opcional para alta temperatura.

Dirección de rotación:
En dirección de las agujas del reloj visto desde el extremo final del motor.

Motores:
Armazón 56J NEMA, 1750 RPM ½ HP. 3500 RPM ½ a 5 HP. Cubiertas abiertas resguardadas, totalmente encerradas enfriadas por ventilador o a prueba de explosiones de 2 HP. Eje de acero inoxidable con balineras de bolas.

Monofásicos: *Voltaje 115/230 ODP y TEFC. (modelo 3 HP – 230 voltios solamente) Se proporciona protección térmica contra sobrecarga construida con reseteo automático.*

Trifásicos: *Voltaje 208-230/460 ODP, TEFC y EX PROOF.*

NOTA: *Para motores trifásicos se debe de proporcionar la protección térmica contra sobrecarga en la unidad de arranque. El arrancador y los calentadores se deben pedir por separado.*

NPE Close Coupled with Footed Motor, 1750 RPM and Explosion-proof Motors
NPE Acople Cerrado con Motor con Patas, 1750 RPM y Motores a Prueba de Explosión

All 1750 RPM Motors

All Explosion Proof Motors and 5 HP, ODP and TEFC

Todos los motores son de 1750 RPM

Todos los motores son a prueba de explosiones, 5 HP, ODP (abiertos resguardados) y TEFC (totalmente encerrados con enfriamiento forzado)

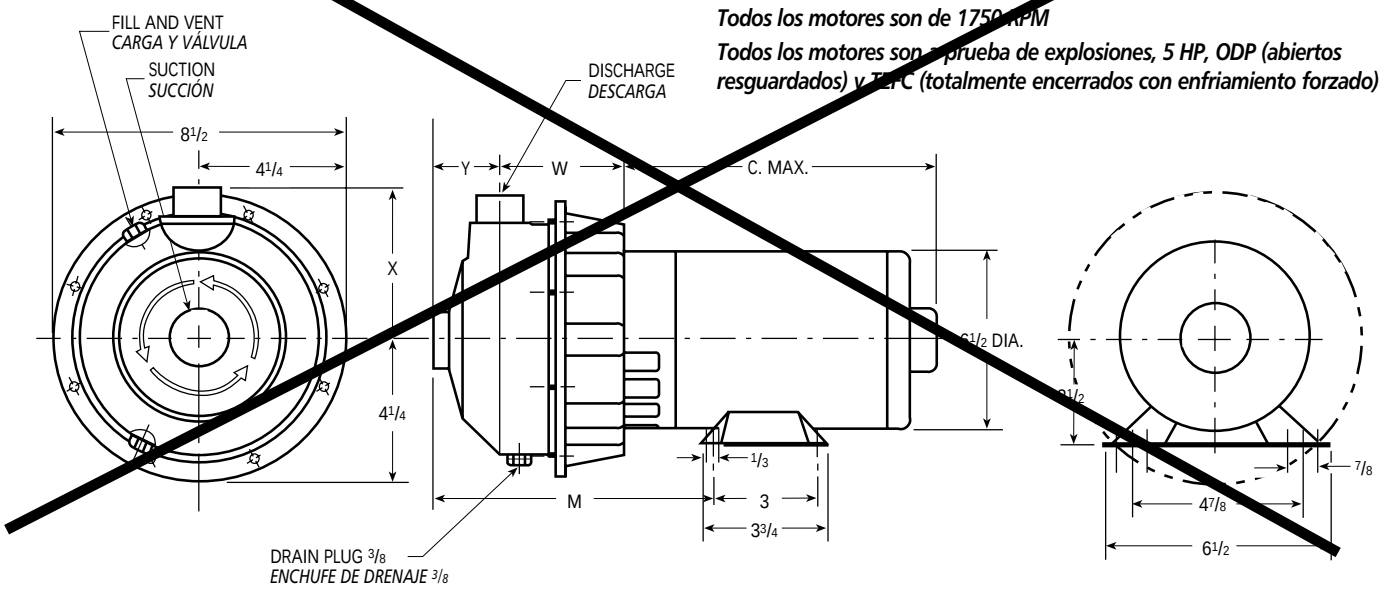

Dimensions – Determined by Pump,
Dimensiones – Determinadas por la Bomba

Pump, *Bomba*	Suction, *Succión*	Discharge, *Descarga*	HP	W	X	Y	L	M
1ST	1¼	1	½ – 3	3 5/16	4 3/8	2	4 9/16	7 5/16
[redacted]								

Available Motor Weights and Dimensions,
Pesos y Dimensiones Disponibles del Motor

HP	Motor Weights, *Pesos del Motor*						C Max. Length, *(Longitud)*
	1 Phase, *Monofásicos*			3 Phase, *Trifásicos*			
	ODP	TEFC	EXP	ODP	TEFC	EXP	
½	16	21	47	19	18	27	9 15/16
¾	19	24	41	21	21	30	10¼
1	22	26	49	23	21	30	11
[redacted]							
2	[redacted]				33	[redacted]	12 1/16
[redacted]							
5	42	—	—	42	45	—	14¼

Dimensions in inches, weights in pounds.
Dimensiones en pulgadas, pesos en libras.

NOTES:

1. Pump will be shipped with top vertical discharge position as standard. For other orientations, remove casing bolts, rotate discharge to desired position, replace and tighten 6mm bolts to 5 – 6 lbs.-ft.
2. Motor dimensions may vary with motor manufacturers.
3. Dimensions in inches, weights in pounds.
4. For explosion proof motor dimensions consult factory for information.
5. Not to be used for construction purposes unless certified.

ITT

Commercial Water

Goulds Pumps

G&L SERIES
MODEL NPE/NPE-F

Installation, Operation and
Maintainence Instructions

GOULDS PUMPS

Goulds Pumps is a brand of ITT Water Technology, Inc.
- a subsidiary of ITT Industries, Inc.

www.goulds.com

Engineered for life

Table of Contents

SUBJECT	PAGE
Safety Instructions	3
Important	3
Installation	3
Suction Piping	4
Discharge Piping	4
Motor-To-Pump Shaft Alignment	4
Rotation	5
Operation	5
Maintenance	5
Disassembly	5
Reassembly	6
Troubleshooting Chart	6
NPE Standard Repair Parts List	7
Mechanical Seal Application Chart	7
Limited Warranty	8
Declaration of Conformity	24

Owner's Information

Pump Model Number: _____

Pump Serial Number: _____

Dealer: _____

Dealer Phone No.: _____

Date of Purchase: _____

Date of Installation: _____

Current Readings at Startup:

1 Ø	3 Ø	L1-2	L2-3	L3-1
Amps: _____	Amps: _____	_____	_____	_____
Volts: _____	Volts: _____	_____	_____	_____

SAFETY INSTRUCTIONS

TO AVOID SERIOUS OR FATAL PERSONAL INJURY OR MAJOR PROPERTY DAMAGE, READ AND FOLLOW ALL SAFETY INSTRUCTIONS IN MANUAL AND ON PUMP.

THIS MANUAL IS INTENDED TO ASSIST IN THE INSTALLATION AND OPERATION OF THIS UNIT AND MUST BE KEPT WITH THE PUMP.

This is a **SAFETY ALERT SYMBOL.** When you see this symbol on the pump or in the manual, look for one of the following signal words and be alert to the potential for personal injury or property damage.

⚠ DANGER Warns of hazards that **WILL** cause serious personal injury, death or major property damage.

⚠ WARNING Warns of hazards that **CAN** cause serious personal injury, death or major property damage.

⚠ CAUTION Warns of hazards that **CAN** cause personal injury or property damage.

NOTICE: INDICATES SPECIAL INSTRUCTIONS WHICH ARE VERY IMPORTANT AND MUST BE FOLLOWED.

THOROUGHLY REVIEW ALL INSTRUCTIONS AND WARNINGS PRIOR TO PERFORMING ANY WORK ON THIS PUMP.

MAINTAIN ALL SAFETY DECALS.

⚠ WARNING

Hazardous fluids can cause fire, burns or death.

UNIT NOT DESIGNED FOR USE WITH HAZARDOUS LIQUIDS OR FLAMMABLE GASES. THESE FLUIDS MAY BE PRESENT IN CONTAINMENT AREAS.

DESCRIPTION & SPECIFICATIONS:

The Models NPE (close-coupled) and NPE-F (frame-mounted) are end suction, single stage centrifugal pumps for general liquid transfer service, booster applications, etc. Liquid-end construction is all AISI Type 316 stainless steel, stamped and welded. Impellers are fully enclosed, non-trimable to intermediate diameters. Casings are fitted with a diffuser for efficiency and for negligible radial shaft loading.

Close-coupled units have NEMA 48J or 56J motors with C-face mounting and threaded shaft extension. Frame-mounted units can be coupled to motors through a spacer coupling, or belt driven.

1. IMPORTANT:

1.1. Inspect unit for damage. Report any damage to carrier/dealer immediately.

1.2. Electrical supply must be a separate branch circuit with fuses or circuit breakers, wire sizes, etc., per National and Local electrical codes. Install an all-leg disconnect switch near pump.

⚠ CAUTION **Always disconnect electrical power when handling pump or controls.**

1.3. Motors must be wired for proper voltage. Motor wiring diagram is on motor nameplate. Wire size must limit maximum voltage drop to 10% of nameplate voltage at motor terminals, or motor life and pump performance will be lowered.

1.4. Always use horsepower-rated switches, contactor and starters.

1.5. Motor Protection

1.5.1. Single-phase: Thermal protection for single-phase units is sometimes built in (check nameplate). If no built-in protection is provided, use a contactor with a proper overload. Fusing is permissible.

1.5.2. Three-phase: Provide three-leg protection with properly sized magnetic starter and thermal overloads.

1.6. Maximum Operating Limits:

Liquid Temperature:	212° F (100° C) with standard seal 250° F (120° C) with optional high temp seal
Pressure:	75 PSI
Starts Per Hour:	20, evenly distributed

1.7. Regular inspection and maintenance will increase service life. Base schedule on operating time. Refer to Section 8.

2. INSTALLATION:

2.1. General

2.1.1. Locate pump as near liquid source as possible (below level of liquid for automatic operation).

2.1.2. Protect from freezing or flooding.

2.1.3. Allow adequate space for servicing and ventilation.

2.1.4. All piping must be supported independently of the pump, and must "line-up" naturally.

⚠ CAUTION **Never draw piping into place by forcing the pump suction and discharge connections.**

2.1.5. Avoid unnecessary fittings. Select sizes to keep friction losses to a minimum.

2.2. Close-Coupled Units:

2.2.1. Units may be installed horizontally, inclined or vertically.

⚠ CAUTION **Do not install with motor below pump. Any leakage or condensation will affect the motor.**

2.2.2. Foundation must be flat and substantial to eliminate strain when tightening bolts. Use rubber mounts to minimize noise and vibration.

2.2.3. Tighten motor hold-down bolts before connecting piping to pump.

2.3. Frame-Mounted Units:

2.3.1. It is recommended that the bedplate be grouted to a foundation with solid footing. Refer to Figure1.

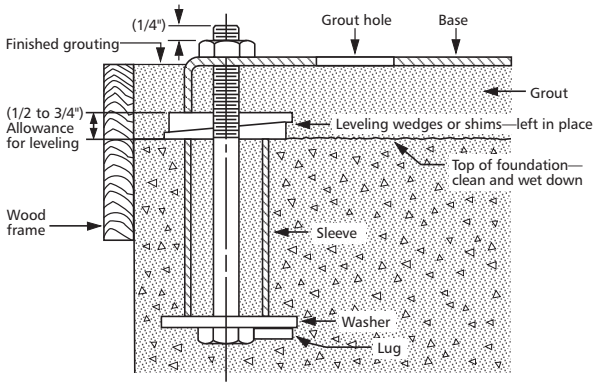

Figure 1

2.3.2. Place unit in position on wedges located at four points (two below approximate center of driver and two below approximate center of pump). Adjust wedges to level unit. Level or plumb suction and discharge flanges.

2.3.3. Make sure bedplate is not distorted and final coupling alignment can be made within the limits of movement of motor and by shimming, if necessary.

2.3.4. Tighten foundation bolts finger tight and build dam around foundation. Pour grout under bedplate making sure the areas under pump and motor feet are filled solid. Allow grout to harden 48 hours before fully tightening foundation bolts.

2.3.5. Tighten pump and motor hold-down bolts before connecting the piping to pump.

3. SUCTION PIPING:

3.1. Low static suction lift and short, direct, suction piping is desired. For suction lift over 10 feet and liquid temperatures over 120 F, consult pump performance curve for Net Positive Suction Head Required.

3.2. Suction pipe must be at least as large as the suction connection of the pump. Smaller size will degrade performance.

3.3. If larger pipe is required, an eccentric pipe reducer (with straight side up) must be installed at the pump.

3.4. Installation with pump below source of supply:

3.4.1. Install full flow isolation valve in piping for inspection and maintenance.

⚠ CAUTION **Do not use suction isolation valve to throttle pump.**

3.5. Installation with pump above source of supply:

3.5.1. Avoid air pockets. No part of piping should be higher than pump suction connection. Slope piping upward from liquid source.

3.5.2. All joints must be airtight.

3.5.3. Foot valve to be used only if necessary for priming, or to hold prime on intermittent service.

3.5.4. Suction strainer open area must be at least triple the pipe area.

3.6. Size of inlet from liquid source, and minimum submergence over inlet, must be sufficient to prevent air entering pump through vortexing. See Figures 2-5

3.7. Use 3-4 wraps of Teflon tape to seal threaded connections.

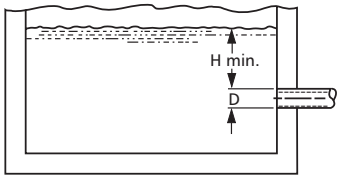

Figure 2

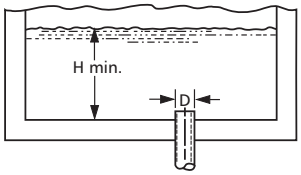

Figure 3

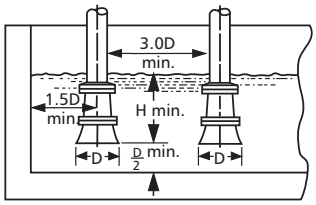

Figure 4

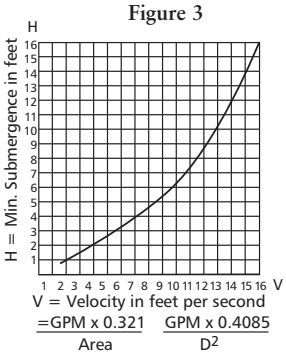

Figure 5

4. DISCHARGE PIPING:

4.1. Arrangement must include a check valve located between a gate valve and the pump. The gate valve is for regulation of capacity, or for inspection of the pump or check valve.

4.2. If an increaser is required, place between check valve and pump.

4.3. Use 3-4 wraps of Teflon tape to seal threaded connections.

5. MOTOR-TO-PUMP SHAFT ALIGNMENT:

5.1. Close-Coupled Units:

5.1.1. No field alignment necessary.

5.2. Frame-Mounted Units:

5.2.1. Even though the pump-motor unit may have a factory alignment, this could be disturbed in transit and must be checked prior to running. See Figure 6.

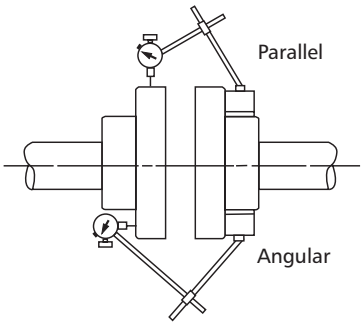

Figure 6

5.2.2. Tighten all hold-down bolts before checking the alignment.

5.2.3. If re-alignment is necessary, always move the motor. Shim as required.

5.2.4. Parallel misalignment - shafts with axis parallel but not concentric. Place dial indicator on one hub and rotate this hub 360 degrees while taking readings on the outside diameter of the other hub. Parallel alignment occurs when Total Indicator Reading is .005", or less.

5.2.5. Angular misalignment - shafts with axis concentric but not parallel. Place dial indicator on one hub and rotate this hub 360 degrees while taking readings on the face of the other hub. Angular alignment is achieved when Total Indicator Reading is .005", or less.

5.2.6. Final alignment is achieved when parallel and angular requirements are satisfied with motor hold-down bolts tight.

⚠ CAUTION **Always recheck both alignments after making any adjustment.**

6. ROTATION:

6.1. Correct rotation is right-hand (clockwise when viewed from the motor end). Switch power on and off quickly. Observe shaft rotation. To change rotation:

6.1.1. Single-phase motor: Non-reversible.

6.1.2. Three-phase motor: Interchange any two power supply leads.

7. OPERATION:

7.1. Before starting, pump must be primed (free of air and suction pipe full of liquid) and discharge valve partially open.

⚠ CAUTION **Pumped liquid provides lubrication. If pump is run dry, rotating parts will seize and mechanical seal will be damaged. Do not operate at or near zero flow. Energy imparted to the liquid is converted into heat. Liquid may flash to vapor. Rotating parts require liquid to prevent scoring or seizing.**

7.2. Make complete check after unit is run under operating conditions and temperature has stabilized. Check for expansion of piping. On frame-mounted units coupling alignment may have changed due to the temperature differential between pump and motor. Recheck alignment.

8. MAINTENANCE:

8.1. Close-Coupled Unit. Ball bearings are located in and are part of the motor. They are permanently lubricated. No greasing required.

8.2. Frame-Mounted Units:

8.2.1. Bearing frame should be regreased every 2,000 hours or 3 month interval, whichever occurs first. Use a #2 sodium or lithium based grease. Fill until grease comes out of relief fittings, or lip seals, then wipe off excess.

8.2.2. Follow motor and coupling manufacturers' lubrication instructions.

8.2.3. Alignment must be rechecked after any maintenance work involving any disturbance of the unit.

9. DISASSEMBLY:

Complete disassembly of the unit will be described. Proceed only as far as required to perform the maintenance work needed.

9.1. Turn off power.

9.2. Drain system. Flush if necessary.

9.3. Close-Coupled Units: Remove motor hold-down bolts.

Frame-Mounted Units: Remove coupling, spacer, coupling guard and frame hold-down bolts.

9.4. Disassembly of Liquid End:

9.4.1. Remove casing bolts (370).

9.4.2. Remove back pull-out assembly from casing (100).

9.4.3. Remove impeller locknut (304).

⚠ CAUTION **Do not insert screwdriver between impeller vanes to prevent rotation of close-coupled units. Remove cap at opposite end of motor. A screwdriver slot or a pair of flats will be exposed. Using them will prevent impeller damage.**

9.4.4. Remove impeller (101) by turning counter-clockwise when looking at the front of the pump. Protect hand with rag or glove.

⚠ CAUTION **Failure to remove the impeller in a counter-clockwise direction may damage threading on the impeller, shaft or both.**

9.4.5. With two pry bars 180 degrees apart and inserted between the seal housing (184) and the motor adapter (108), carefully separate the two parts. The mechanical seal rotary unit (383) should come off the shaft with the seal housing.

9.4.6. Push out the mechanical seal stationary seat from the motor side of the seal housing.

9.5. Disassembly of Bearing Frame:

9.5.1. Remove bearing cover (109).

9.5.2. Remove shaft assembly from frame (228).

9.5.3. Remove lip seals (138 and 139) from bearing frame and bearing cover if worn and are being replaced.

9.5.5. Use bearing puller or arbor press to remove ball bearings (112 and 168).

10. REASSEMBLY:

10.1. All parts should be cleaned before assembly.

10.2. Refer to parts list to identify required replacement items. Specify pump index or catalog number when ordering parts.

10.3. Reassembly is the reverse of disassembly.

10.3.1. Impeller and impeller locknut assembled onto motor shaft with 10 ft-lbs of torque.

10.4. Observe the following when reassembling the bearing frame:

10.4.1. Replace lip seals if worn or damaged.

10.4.2. Replace ball bearings if loose, rough or noisy when rotated.

10.4.3. Check shaft for runout. Maximum permissible is .002" T.I.R.

10.5. Observe the following when reassembling the liquid-end:

10.5.1. All mechanical seal components must be in good condition or leakage may result. Replacement of complete seal assembly, whenever seal has been removed, is good standard practice.

It is permissible to use a light lubricant, such as glycerin, to facilitate assembly. Do not contaminate the mechanical seal faces with lubricant.

10.5.2. Inspect casing O-ring (513) and replace if damaged. This O-ring may be lubricated with petroleum jelly to ease assembly.

10.5.3. Inspect guidevane O-ring (349) and replace if worn.

⚠ CAUTION **Do not lubricate guidevane O-ring (349). Insure it is not pinched by the impeller on reassembly.**

10.6. Check reassembled unit for binding. Correct as required.

10.7. Tighten casing bolts in a star pattern to prevent O-ring binding.

11. TROUBLE SHOOTING CHART:

MOTOR NOT RUNNING
(See causes 1 thru 6)

LITTLE OR NO LIQUID DELIVERED:
(See causes 7 thru 17)

POWER CONSUMPTION TOO HIGH:
(See causes 4, 17, 18, 19, 22)

EXCESSIVE NOISE AND VIBRATION:
(See causes 4, 6, 9, 13, 15, 16, 18, 20, 21, 22)

PROBABLE CAUSE:

1. Tripped thermal protector
2. Open circuit breaker
3. Blown fuse
4. Rotating parts binding
5. Motor wired improperly
6. Defective motor
7. Not primed
8. Discharge plugged or valve closed
9. Incorrect rotation
10. Foot valve too small, suction not submerged, inlet screen plugged.
11. Low voltage
12. Phase loss (3-phase only)
13. Air or gasses in liquid
14. System head too high
15. NPSHA too low:
    Suction lift too high or suction losses excessive. Check with vacuum gauge.
16. Impeller worn or plugged
17. Incorrect impeller diameter
18. Head too low causing excessive flow rate
19. Viscosity or specific gravity too high
20. Worn bearings
21. Pump or piping loose
22. Pump and motor misaligned

NPE STANDARD REPAIR PARTS LIST

Item No.	Description	Materials of Construction
100	Casing	AISI 316L Stainless Steel
101	Impeller	
108A	Motor adapter with foot	
108B	Motor adapter less foot	
108C	Motor adapter with foot and Flush	
108D	Motor adapter less foot with Flush	
123	Deflector	BUNA-N
184A	Seal housing std.	AISI 316L S.S.
184B	Seal housing with seal flush	
240	Motor support	300 S.S.
	Rubber channel	Rubber
304	Impeller locknut	AISI 316 S.S.
347	Guidevane	AISI 316L S.S.
349	Seal-Ring, guidevane	Viton (standard)
		EPR
		BUNA
370	Socket head screw, casing	AISI 410 S.S.
371	Bolts, motor	Steel/plated
383	Mechanical seal	
408	Drain and vent plug, casing	AISI 316 S.S.
412B	O-Ring, drain plugs	Viton (standard)
		EPR
		BUNA
513	O-Ring, casing	Viton (standard)
		EPR
		BUNA

MECHANICAL SEAL APPLICATION CHART

Item 383 Mechanical Seal (⅝" seal)				
Rotary	Stationary	Elastomers	Metal Parts	Part No.
Carbon	Sil-Carbide	EPR	316SS	10K18
		Viton		10K55
Sil-Carbide		EPR		10K81
		Viton		10K62

NOTE: Close coupled units supplied with ½ HP 1750 RPM, ½ - 3 HP Explosion Proof or 5 HP motors, utilize motor adapter less foot and a footed motor.

NOTE: Frame mounted units (NPE-F) utilize the XS Power frame and motor adapter less foot. For repair parts for the power frame refer to the XS-Power frame repair parts page in the parts section of your catalog. To order the power frame complete order item 14L61

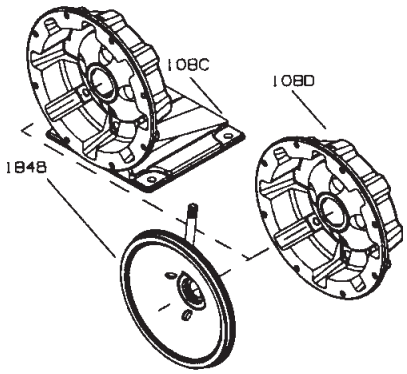

NOTE: OPTIONAL SEAL FLUSH COMPONENTS

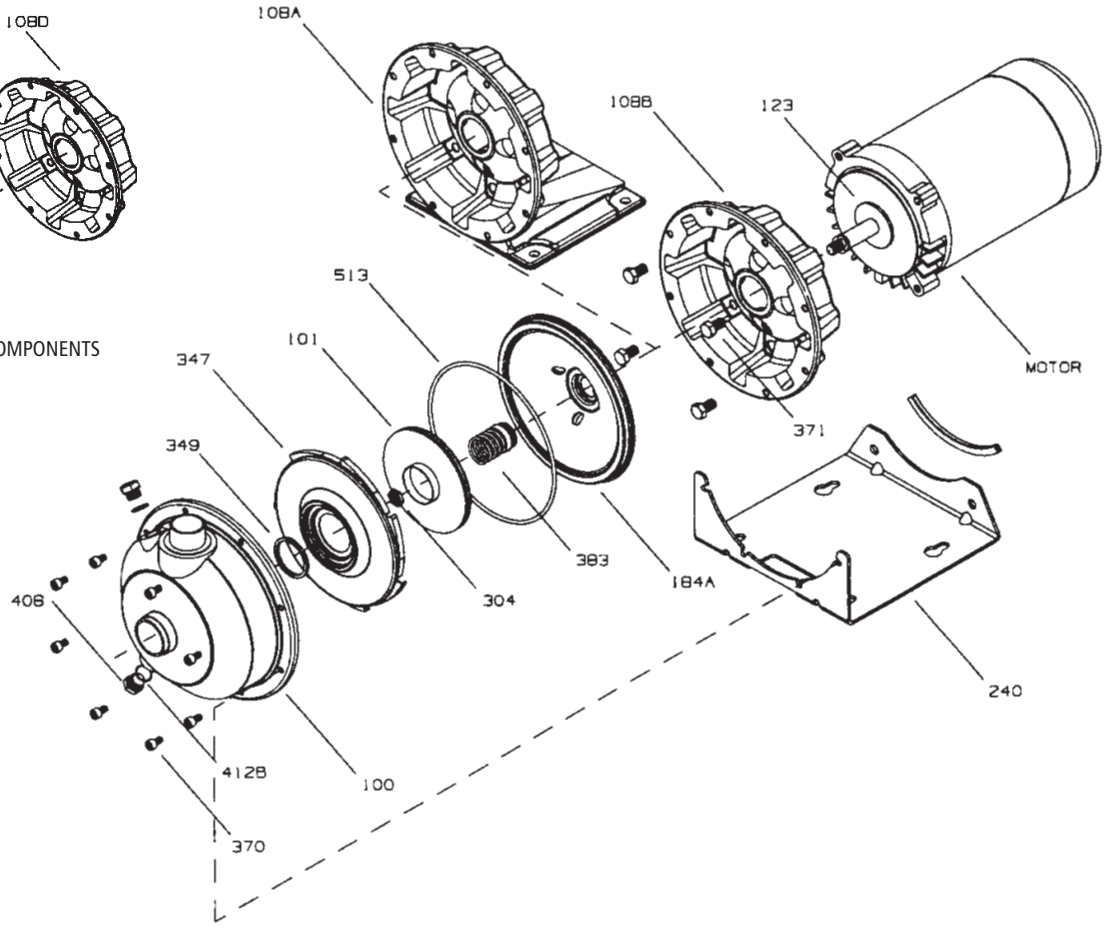

ITT

Commercial Water

GOULDS PUMPS LIMITED WARRANTY

This warranty applies to all water systems pumps manufactured by Goulds Pumps.

Any part or parts found to be defective within the warranty period shall be replaced at no charge to the dealer during the warranty period. The warranty period shall exist for a period of twelve (12) months from date of installation or eighteen (18) months from date of manufacture, whichever period is shorter.

A dealer who believes that a warranty claim exists must contact the authorized Goulds Pumps distributor from whom the pump was purchased and furnish complete details regarding the claim. The distributor is authorized to adjust any warranty claims utilizing the Goulds Pumps Customer Service Department.

The warranty excludes:

(a) Labor, transportation and related costs incurred by the dealer;
(b) Reinstallation costs of repaired equipment;
(c) Reinstallation costs of replacement equipment;
(d) Consequential damages of any kind; and,
(e) Reimbursement for loss caused by interruption of service.

For purposes of this warranty, the following terms have these definitions:

(1) "Distributor" means any individual, partnership, corporation, association, or other legal relationship that stands between Goulds Pumps and the dealer in purchases, consignments or contracts for sale of the subject pumps.
(2) "Dealer" means any individual, partnership, corporation, association, or other legal relationship which engages in the business of selling or leasing pumps to customers.
(3) "Customer" means any entity who buys or leases the subject pumps from a dealer. The "customer" may mean an individual, partnership, corporation, limited liability company, association or other legal entity which may engage in any type of business.

THIS WARRANTY EXTENDS TO THE DEALER ONLY.

GOULDS PUMPS

Goulds Pumps, G&L and the ITT Engineered Blocks Symbol are registered trademarks and tradenames of ITT Industries Inc.

SPECIFICATIONS ARE SUBJECT TO CHANGE WITHOUT NOTICE.

IM013R07 February, 2006

© 2006 ITT Water Technology, Inc.

Engineered for life

GOULDS PUMPS

Repair Parts

MODEL

G&L Series NPE/NPE-F

Goulds Pumps

ITT Industries

© 2005 ITT Water Technology, Inc.
Effective June, 2005
RNPE

TABLE OF CONTENTS

NPE END SUCTION

NPE Product Line Numbering System 1
NPE Seal Chart (Part of Numbering System) 1
Parts List 2
Optional Components 2
Pictorial Breakdown of Pump 3
Impeller Chart Standard Impeller by Impeller Code 4
Impeller Chart by Motor Size at 3500 RPM 4
Motor Chart 5

NOTE:
For units built before September, 1997
The following upgrades are interchangeable.

(1) Item 349 Guidevane O-Ring was upgraded from O-Ring to Square Seal Ring.

(2) Pump Components have been upgraded from 304 SS to 316L SS.

(3) Mechanical Seal upgrades as noted on page 1.

(4) Pump Mounting location for motor adapter with foot to pump support are interchangeable.

NPE/NPE-F NUMBERING SYSTEM

1 ST 2 C 1 A 4 F

SEAL VENT/FLUSH OPTION

MECHANICAL SEAL and O-RING
4 = Pre-Engineered Standard
For Optional Mechanical Seal modify catalog order no. with Seal Code listed below.

21 Mechanical Seal (5/8" seal)						
Seal Code	**Rotary**	**Stationary**	**Elastomers**	**Metal Parts**	**Part No.**	**Casing O-Ring**
2	Carbon	Sil-Carbide	EPR	316 SS	10K18*	EPR
4			Viton		10K55***	Viton
5	Sil-Carbide		EPR		10K81	EPR
6			Viton		10K62**	Viton

Note: *Replaces obsolete 10K56 **Replaces obsolete 10K29 ***Replaces obsolete 10K46 and 10K24

Impeller Option Code . . . No Adder Required
For Optional Impeller Diameters modify catalog order no. with Impeller code listed below.
Select Optional Impeller Diameter from Pump Performance Curve.

Impeller Code	Pump Size		
	1 x 1¼-6	1¼ x 1½-6	1½ x 2-6
	Diameter	Diameter	Diameter
K		6⅛	
G		5 15/16	5⅜
H		5½	5
A	6⅛	5¼	4¾
B	5¾	5 1/16	4⅝
C	5 3/16	4⅞	4⅜
D	4¾	4⅝	4 1/16
E	4 7/16	4¼	3⅝
F	4 1/16	3⅞	

Note: Not recommended for operation beyond printed H-Q curve.

For critical application conditions, consult factory.

Note: Not all combinations of motor, impeller and seal options are available for every pump model. Please check with G&L on non-cataloged numbers.

Note: Impeller diameter is measured at the vane. The overall diameter of the shroud may be greater.

DRIVER
1 = 1PH, ODP 4 = 1 PH, TEFC 7 = 3 PH, XP
2 = 3 PH, ODP 5 = 3 PH, TEFC 8 = 575 V, XP
3 = 575 V, ODP 6 = 575 V, TEFC 0 = 1 PH, XP

HP RATING
C = ½ HP F = 1½ HP J = 5 HP
D = ¾ HP G = 2 HP
E = 1 HP H = 3 HP

DRIVER: HERTZ/POLE/RPM
1 = 60 HZ, 2 pole, 3500 RPM
2 = 60 HZ, 4 pole, 1750 RPM
3 = 60 HZ, 6 pole, 1150 RPM
4 = 50 HZ, 2 pole, 2900 RPM
5 = 50 HZ, 4 pole, 1450 RPM

MATERIAL
ST = Stainless Steel

PUMP SIZE
1 = 1 x 1¼ - 6 2 = 1¼ x 1½ - 6 3 = 1½ x 2 - 6

For Frame Mounted version, substitute the letters "FRM" in these positions.

NPE STANDARD REPAIR PARTS LIST

Item No.	Description	Materials of Construction	1ST 1 x 1¼	2ST 1¼ x 1½	3ST 1½ x 2	QTY.
100	Casing	AISI 316L SS	1L81	1L82	1L83	1
101	Impeller		See Impeller chart on page 4			1
108A	Motor adapter with foot*		1L80			1
108B	Motor adapter less foot*		1L87			
123	Deflector	BUNA-N	5K7			1
184A	Seal housing standard	AISI 316L SS	1L79			1
184B	Seal housing with seal flush		1L333			
240	Motor support	300 SS	4L320			1
	Rubber channel	Rubber	9K188			1
304	Impeller locknut	AISI 316 SS	13K286			1
347	Guidevane	AISI 316L SS	3L23	3L24	3L25	1
349	Seal ring, guidevane	Viton standard	5K269	5K270		1
		EPR	5K273	5K274		
		BUNA	5K271	5K272		
370	Socket head screw, casing	AISI 410 SS	13L65			8
371	Bolts, motor	Steel/plated	13K252			4
383	Mechanical seal		See Mechanical Seal Chart on Page 1			1
408	Drain and vent plug, casing	AISI 316 SS	6L3			2
412B	O-ring, drain plugs	Viton, standard	5L99			2
		EPR	5L80			
		BUNA	5L62			
513	O-ring, casing	Viton standard	5K206			1
		EPR	5K193			
		BUNA	5K4			
575	Pipe Cap	304 SS	6K150			1

** Flush access hole provided.*

NOTE:
OPTIONAL SEAL FLUSH COMPONENTS

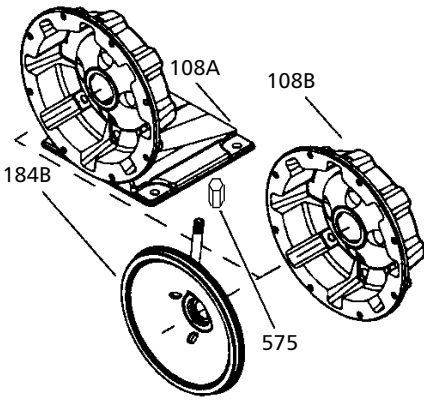

NOTE:
Close-coupled units using motors ½ – 1 HP (TEFC and ODP) will use footed motor adapter as standard.
Close-coupled units using motors 1½ – 3 HP (TEFC and ODP) will use footless motor adapter as standard.
Close-coupled units using motors 5 HP and all X-Proof will have a foot attached to the motor.

NOTE:
Frame mounted units (NPE-F) utilize the XS Power Frame and motor adapter less foot. For repair parts for the power frame refer to the XS-Power frame repair parts page in the parts section of your catalog. To order the power frame complete order item 14L61.

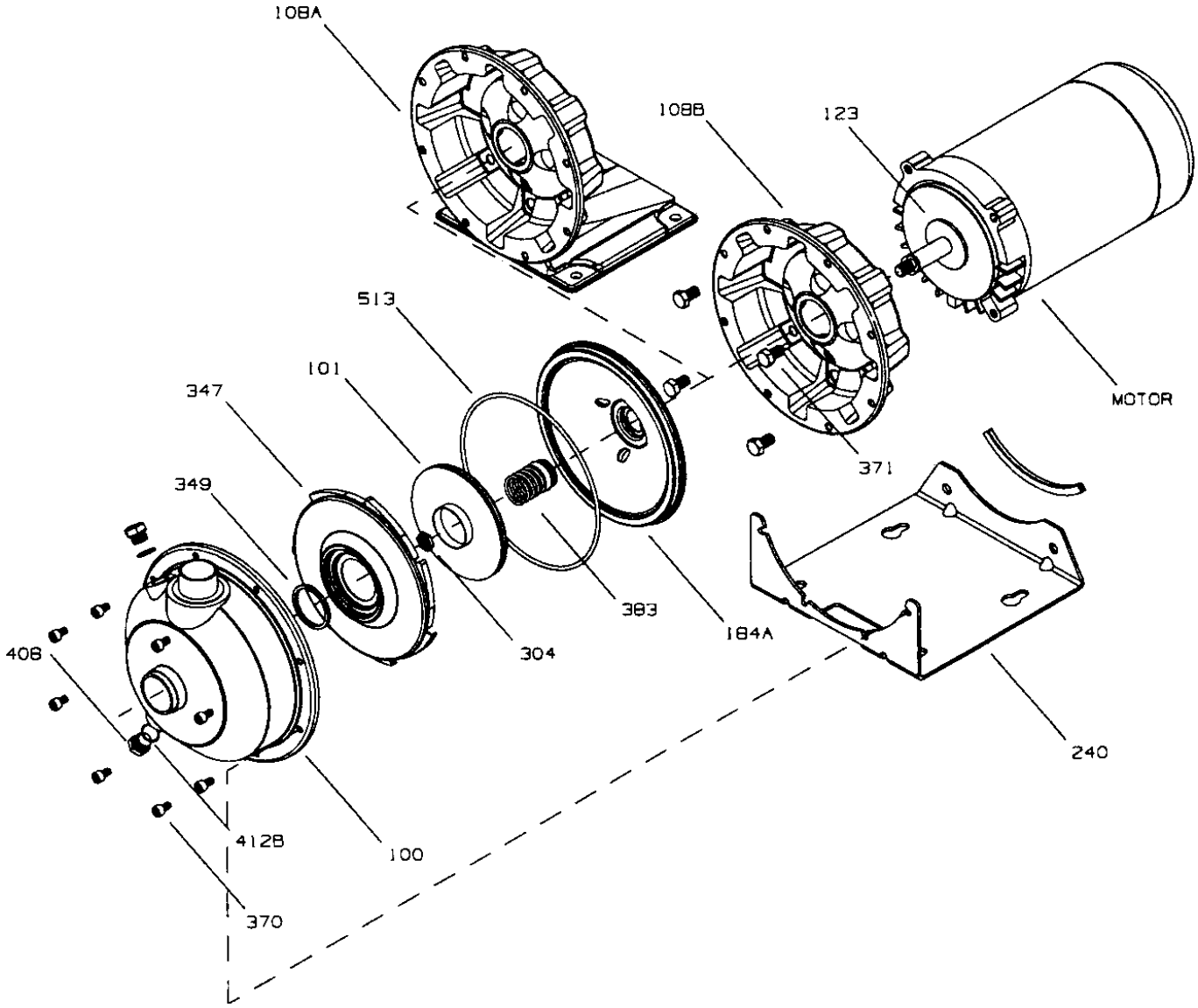

NPE STANDARD IMPELLERS

Impeller Code	Pump Size					
	1 x 1¼-6		1¼ x 1½-6		1½ x 2-6	
	Diameter	Part No.	Diameter	Part No.	Diameter	Part No.
K			6⅛	2L885		
G			5 15/16	2L700	5⅜	2L702
H			5½	2L699	5	2L701
A	6⅛	2L47	5¼	2L48	4¾	2L49
B	5¾	2L44	5 1/16	2L54	4⅝	2L58
C	5 3/16	2L46	4⅞	2L53	4⅜	2L57
D	4¾	2L42	4⅝	2L52	4 1/16	2L56
E	4 7/16	2L45	4¼	2L51	3⅝	2L55
F	4 1/16	2L59	3⅞	2L50		

NPE STANDARD IMPELLERS BY MOTOR SIZE AT 3500 RPM

For ODP/TEFC Units Built After September 1, 1997

HP	HP Code		1ST	2ST		3ST
			ODP/TEFC	ODP/TEFC		ODP/TEFC
½	C	Repair #	2L45			
		Dia.	4 7/16			
		Imp. Code	E			
¾	D	Repair #	2L42	2L50		
		Dia.	4¾	3⅞		
		Imp. Code	D	F		
1	E	Repair #	2L46	2L51		2L55
		Dia.	5 3/16	4¼		3⅝
		Imp.Code	C	E		E
1½	F	Repair #	2L44	2L52		2L56
		Dia.	5¾	4⅝		4 1/16
		Imp. Code	B	D		D
2	G	Repair #	2L47	2L53		2L57
		Dia.	6⅛	4⅞		4⅜
		Imp. Code	A	C		C
3	H	Repair #	2L47	2L48		2L49
		Dia.	6⅛	5¼		4¾
		Imp. Code	A	A		A
5	J	Repair #		2L700	2L885	2L702
		Dia.		5 15/16	6⅛	5⅜
		Imp. Code		G	K	G

For Current Explosion Proof and All Units Built Before September 1, 1997

HP	HP Code		1ST		2ST			3ST	
			ODP	TEFC/EXP	ODP		TEFC/EXP	ODP	TEFC/EXP
½	C	Repair #	2L45	2L59					
		Dia.	4 7/16	4 1/16					
		Imp. Code	E	F					
¾	D	Repair #	2L42	2L45	2L50				
		Dia.	4¾	4 7/16	3⅞				
		Imp. Code	D	E	F				
1	E	Repair #	2L46	2L42	2L51		2L50	2L55	
		Dia.	5 3/16	4¾	4¼		3⅞	3⅝	
		Imp. Code	C	D	E		F	E	
1½	F	Repair #	2L44	2L46	2L52		2L51	2L56	2L55
		Dia.	5¾	5 3/16	4⅝		4¼	4 1/16	3⅝
		Imp. Code	B	C	D		E	D	E
2	G	Repair #	2L47	2L44	2L53		2L52	2L57	2L56
		Dia.	6⅛	5¾	4⅞		4⅝	4⅜	4 1/16
		Imp. Code	A	B	C		D	C	D
3	H	Repair #	2L47	2L47	2L48		2L54	2L49	2L58
		Dia.	6⅛	6⅛	5¼		5 1/16	4¾	4⅝
		Imp. Code	A	A	A		B	A	B
5	J	Repair #			2L700	2L885		2L702	
		Dia.			5 15/16	6⅛		5⅜	
		Imp. Code			G	K		G	

Note:** Max. Explosion Proof rating is 2 HP.

MODEL NPE 3500 RPM

HP	Single-Phase, 60 Hz, 115/230 V**, 56J Frame								
	Open, Drip-Proof①			Totally Enclosed, Fan Cooled			Explosion Proof		
	Order No.	Max. Amps	Wt. (lbs.)	Order No.	Max. Amps	Wt. (lbs.)	Order No.	Max. Amps	Wt. (lbs.)
½	E04853S	10.0/5.0	16	E04821	6.2/3.1	21	BBC04825	6.2/3.1	47
¾	E05853S	14.0/7.0	19	E05821	8.8/4.4	24	BBC05825	8.8/4.4	41
1	E06853S	16.0/8.0	22	E06821	11.6/5.8	26	BBC06825	11.6/5.8	49
1½	E07858S	21.4/10.7	31	E07821	16.2/8.1	35	BBC07825	16.2/8.1	56
2	E08854	26.8/13.4	36	E08821	20.8/10.4	39	BBC08825	20.8/10.4	60
3	E09854	14.0	40	E09821	11.89	44			
5	E10754	14.4	55						

Note:** 3 and 5 HP Single-Phase motors are 230 V only.

HP	Three-Phase, 60 Hz, 208-230/460 V, 56J Frame								
	Open, Drip-Proof①			Totally Enclosed, Fan Cooled			Explosion Proof		
	Order No.	Max. Amps	Wt. (lbs.)	Order No.	Max. Amps	Wt. (lbs.)	Order No.	Max. Amps	Wt. (lbs.)
½	E04873	2.6/1.3	19	E04876	1.9/.95	18	BBC04875	1.9/.95	27
¾	E05873	3.4/1.7	19	E05876	2.3/1.15	21	BBC05875	2.3/1.15	30
1	E06873	4.2/2.1	22	E06876	3.2/1.6	21	BBC06875	3.2/1.6	30
1½	E07878	5.8/2.9	25	E07876	4.8/2.4	27	BBC07875	4.8/2.4	37
2	E08874	6.9/3.3	39	E08876	5.4/2.7	33	BBC08875	5.4/2.7	44
3	E09874	7.2/3.6	31	E09876	7.6/3.8	37			
5	E10774	7.2/14.4	50	E10876	6.2/12.4	48			

① For vertical mounting order motor canopy separately - 9K272 for ½, ¾ and 1 HP single phase or 9K273 for all other ODP motors.

MODEL NPE 1750 RPM

HP	Single-Phase, 60 HZ, 115/230 V, 56J Frame								
	Open, Drip-Proof①			Totally Enclosed, Fan Cooled			Explosion Proof		
	Order No.	Max. Amps	Wt. (lbs.)	Order No.	Max. Amps	Wt. (lbs.)	Order No.	Max. Amps	Wt. (lbs.)
½	E04811	8.6/4.3	19	E04812	8.0/4.0	20	BBC04815	8.0/4.0	45

HP	Three-Phase, 60 HZ, 208-230/460 V, 56J Frame								
	Open, Drip-Proof①			Totally Enclosed, Fan Cooled			Explosion Proof		
	Order No.	Max. Amps	Wt. (lbs.)	Order No.	Max. Amps	Wt. (lbs.)	Order No.	Max. Amps	Wt. (lbs.)
½	E04831	3.76/4.0/2.0	20	E04832	1.77/1.6/.8	20	BBC04835	1.77/1.6/.8	45

Note: Explosion Proof Motors are class 1 and 2, Group D

GOULDS PUMPS

Goulds Pumps is a brand of ITT Water Technology, Inc.
- a subsidiary of ITT Industries, Inc.

Goulds Pumps, G&L and the ITT Engineered Blocks Symbol
are registered trademarks and tradenames of ITT Industries.

Printed in U.S.A.

SPECIFICATIONS ARE SUBJECT TO CHANGE WITHOUT NOTICE.
www.goulds.com

Goulds Pumps

ITT Industries

PUMP SPECIFICATION BULLETIN

GMC SERIES
MEDIUM DUTY COMPACT
ROTARY GEAR PUMP

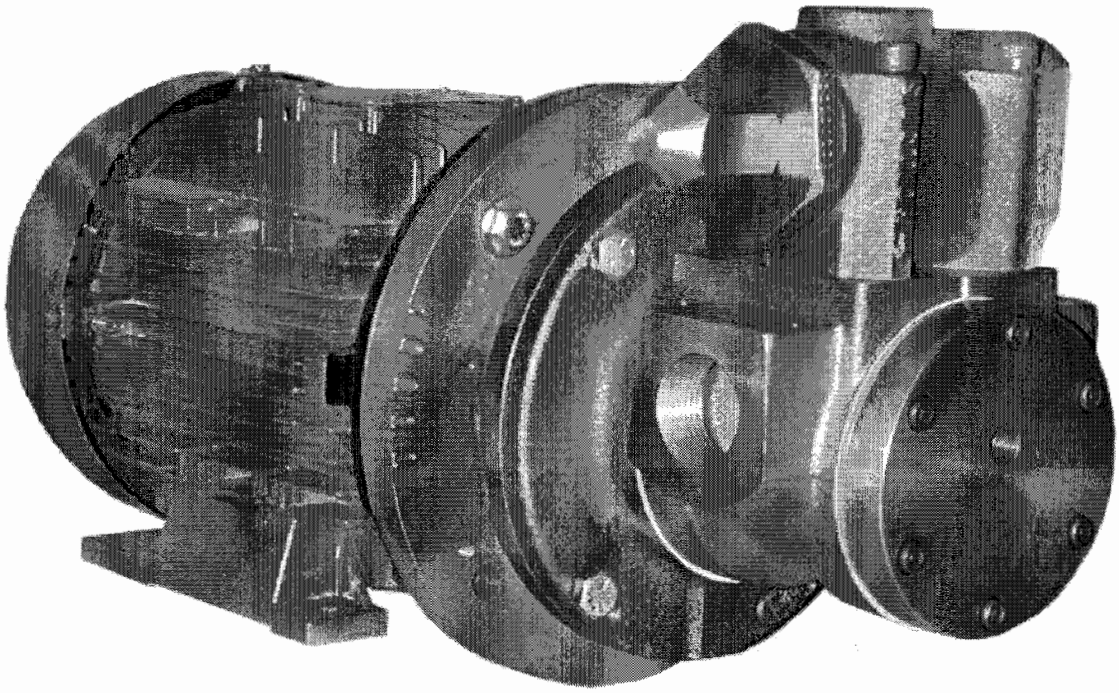

The GMC series is designed for applications in the operating ranges noted below. Direct connecting to other pieces of equipment provides an extremely compact system design.

The six sizes of Gorman-Rupp close coupled pumps connect to standard NEMA "C" flanges. Rotor shaft bores accept standard motor shafts; 5/8" standard, 7/8", 1-1/8" and 1-3/8" are optional. Metric coupling also available.

At synchronous speeds, extra drive equipment, including couplings or outboard bearings, is not required.

For continuous service, or for handling viscous liquids, see the heavy duty GHS section.

FEATURES

200 PSI CAPABILITY
COMPACT-NEMA C MOUNTING - NO DRIVE COUPLING OR GUARD
ACCURATE ALIGNMENT
INEXPENSIVE PUMP/DRIVE UNIT
THRUST CONTROLLED PUMP ELEMENTS
LONG LIFE - QUIET OPERATION
MULTIPLE PORT POSITIONING

OPERATING RANGE

CAPACITY	(GPM):	(3 TO 38)
	[LPM] :	[11 TO 144]
PRESSURE	(PSI) :	(0 TO 200)
	[BAR] :	[0 TO 14]
VISCOSITY	(SSU) :	(28 TO 250,000)
	[cSt] :	[1 TO 55,000]
TEMPERATURE	(F) :	(-40° TO 300°)
	[C] :	[-40° TO 149°]

APPLICATIONS

USE WITH ANY CLEAN LIQUID COMPATIBLE WITH CAST IRON

- ★ BOOSTER SERVICE
- ★ CIRCULATING
- ★ FILTERING
- ★ LUBRICATING
- ★ TRANSFERRING

SUPERSEDES ALL PREVIOUS ISSUES
© Copyright by the Gorman-Rupp Co.

Standard Construction

EXTERIOR	ROTOR & IDLER	HOUSING PORTS	BUSHINGS	IDLER PIN	SHAFT	SHAFT SEALING: MECH. SEAL ●	SHAFT SEALING: LIPSEAL ■	ROTATION	INTERNAL RELIEF VALVE: MATERIAL	INTERNAL RELIEF VALVE: SETTING
CAST IRON	HIGH STRENGTH IRON	180° TAPPED	BRONZE	HARDENED STEEL	STEEL	VITON	BUNA-N	C.W.	DUCTILE IRON	75 PSI [5 BAR]

Standard Models

G M C 1 DC 3 – B

GEAR | DUTY | DESIGN | PORT-SIZE | HYDRAULIC SIZE | SEAL | STYLE

MODEL NUMBER	NOM. CAPACITY - SPEED: MAXIMUM GPM [LPM]	MAXIMUM RPM 60 Hz [50 HZ]	ALTERNATIVE GPM [LPM]	ALTERNATIVE RPM 60 Hz [50 Hz]	MAXIMUM DIFFERENTIAL PRESSURE - PSI [BAR]: BELOW 38 SSU [4 cSt]	38 TO 100 SSU [21 cSt]	100 TO 250,000 SSU [55,000 cSt]	TEMP. °F [°C]	SHIPPING DATA: Weight LBS [KG]	Volume CU. FT.
GMC 1DC 3-B ●	9 [28]	1750 [1460]	6 [19]	1150 [960]	100 [7]	150 [10]	200 [14]	● 300 [149]	20 [9,0]	0.6
~~GMC 1DC 4-B~~ ■										
GMC 1DE 3-B ● **GMC 1DE 4-B** ■	11 [35]		7 [22]						20 [9,0]	0.6
GMC 1-1/2GC 3-B ● **GMC 1-1/2GC 4-B** ■	16 [50]		10 [32]						32 [14,5]	0.6
GMC 2GC 3-B ● GMC 2GC 4-B ■									32 [14,5]	0.6
GMC 1-1/2GF 3-B ● **GMC 1-1/2GF 4-B** ■	23 [73]		15 [47]						32 [14,5]	0.6
GMC 2GF 3-B ● GMC 2GF 4-B ■									32 [14,5]	0.6
GMC 1-1/2GH 3-B ● **GMC 1-1/2GH 4-B** ■	31 [98]		20 [63]					■ 225 [107]	32 [14,5]	0.6
GMC 2GH 3-B ● GMC 2GH 4-B ■									32 [14,5]	0.6
GMC 1-1/2GJ 3-B ● GMC 1-1/2GJ 4-B ■	38 [120]		25 [79]						32 [14,5]	0.6
GMC 2GJ 3-B ● **GMC 2GJ 4-B** ■									32 [14,5]	0.6

NOTE: RECOMMENDED PORT SIZES ARE SHOWN IN **BOLDFACE**. Example: **GMC 2GJ 3-B**

SEAL LIMITATIONS:

● MECH. SEAL OPTIONS	MAXIMUM INLET PRESSURE (PSI [BAR]): NON-LUBRICATING LIQUID	MAXIMUM INLET PRESSURE (PSI [BAR]): LUBRICATING LIQUID	MAXIMUM VISCOSITY (SSU [cSt])	TEMPERATURE RANGE (°F [°C])
STD	100 [7]	150 [10.5]	15,000 [3250]	0 to 400 [-17 to 204]
60A	100 [7]	150 [10.5]	15,000 [3250]	-50 to 225 [-45 to107]
61J	100 [7]	200 [14]	15,000 [3250]	0 to 400 [-17 to 204]

■ LIPSEAL OPTIONS	MAXIMUM INLET PRESSURE (PSI [BAR])	MAXIMUM VISCOSITY (SSU [cSt])	TEMPERATURE RANGE (°F [°C])
STD	15 [1]	25,000 [5,500]	-50 to 225 [-45 to 107]
65A	15 [1]	25,000 [5,500]	0 to 350 [-17 to177]
65C	100 [7]	250,000 [55,000]	0 to 350 [-17 to177]

NOTE: PROPER PUMP APPLICATION REQUIRES CONSIDERATION OF ADDITIONAL FACTORS. PLEASE REVIEW CHALLENGING APPLICATIONS IN SECTION 500 AND THE LIQUIDS LIST IN THE ROTARY GEAR REFERENCE GUIDE.

SUPERSEDES ALL PREVIOUS ISSUES
© Copyright by the Gorman-Rupp Co.

Options

BUSHING LIMITATIONS:

Bushing Material	Optimal Viscosity Range	Temp Limit, °F[C]	Abrasives	Corrosives
STD, 40B	100 TO 100,000 SSU	400 [205]	No	No
40C	0.1 cPs to 2,000,000 SSU	400 [205]	No	Yes *
40U	0.1 cPs to 2,000,000 SSU	400 [205]	Yes	Yes *

Note: * Consult chemical compatibility charts for new applications.

CATEGORY	STANDARD	OPTIONAL NUMBER & DESCRIPTION
ROTATION	C.W. (VIEWED FROM SHAFT END)	01A C.C.W. 01B BI-ROTATION ① ④

HOUSING PORTS	180°	TBS HOUSING BUSHING	HYDRAULIC SIZE	PORT
		05A	**DC, DE**	1" NPT - 90°
		05B	GC, **GF, GH**, GJ	1-1/2" NPT - 90°
		05D	GC, GF, GH, **GJ**	2" NPT - 90°
		MATCH **BOLDFACE** OPTIONS WITH **BOLDFACE** MODELS. EX: **GMC 2GJ 3B** OPT. 05D CHANGES PORT TO 90° GMC 1-1/ 2GJ 3B OPT. 05B CHANGES PORT TO 90°		

HOUSING PORT CLOCK POSITION	180° (3 SUCTION - 9 DISCHARGE) (VIEWED FROM SHAFT END)	② 90° (3-12)		180° (3-9)
		15A	12-9	

RELIEF VALVE			
	LOW PRESSURE RELIEF VALVE DUCTILE IRON/VITON 90° HEAD MOUNT 180° HOUSING MOUNT	25A	HIGH PRESSURE
		25C	LESS RELIEF VALVE
		25D	2 VALVES - LOW PRESSURE ③
		25E	2 VALVES - HIGH PRESSURE ③
	FOR CRACKING PRESSURE RANGES REFER TO SECTION 500, PG 18	25G	RETURN TO TANK - LOW PRESSURE, NEOPRENE O-RING
		25H	RETURN TO TANK - HIGH PRESSURE, NEOPRENE O-RING
		25J	LOW PRESSURE, TEFLON ENCAPSULATED O-RING
		25K	HIGH PRESSURE, TEFLON ENCAPSULATED O-RING
		25L	LESS RELIEF VALVE, TEFLON ENCAPSULATED O-RING

OPTIONS CONTINUED

① 180° PORT HOUSINGS WITH 2 RELIEF VALVES RECOMMENDED.
② MUST HAVE SELECTED 90° OPTION FROM CATEGORY 05 (HOUSING PORTS) TO SELECT FROM THIS COLUMN.
③ 180° PORT HOUSINGS REQUIRED. MUST SELECT BI-ROTATION OPTION 01B.
④ DO NOT ALLOW DISCHARGE PRESSURE TO EXCEED RATED SEAL PRESSURE. SEE SEAL LIMITATION TABLE.

© Copyright by the Gorman-Rupp Co.

Options (Continued)

CATEGORY	STANDARD	OPTIONAL NUMBER & DESCRIPTION		
GEAR TRIM	NO TRIM	35C	C TRIM (VISCOSITY)	FOR VISCOSITY TRIM CHART REFER TO SECTION 500, PAGE 20. (TRIM ACCORDING TO VISCOSITY; CONTACT DISTRIBUTOR OR FACTORY.)
		35D	D TRIM (VISCOSITY)	
HEAD IDLER IDLER BUSHING	CAST IRON HIGH STRENGTH IRON BRONZE	40B	BRONZE IDLER GEAR	
		40C	CARBON GRAPHITE IDLER BUSHING	
		40U	SILICON CARBIDE IDLER BUSHING	
ROTOR / SHAFT	HIGH STRENGTH IRON/ STEEL 5/8" BORE ①	50A	7/8" BORE ②	
		50B	1-1/8" BORE ③	
		50C	1-3/8" BORE ④	
		50D	24 mm BORE ⑥	
		50E	28 mm BORE ⑥	
		50F	BRONZE/STEEL - 24 mm BORE ⑤ ⑥	
		50G	BRONZE/STEEL - 28 mm BORE ⑤ ⑥	
		50H	BRONZE/STEEL - 5/8" BORE ① ⑤	
		50J	BRONZE/STEEL - 7/8" BORE ② ⑤	
		50K	BRONZE/STEEL - 1-1/8" BORE ③ ⑤	
		50L	BRONZE/STEEL - 1-3/8" BORE ④ ⑤	
SEAL	MECH. SEAL FRICTION DRIVE - CARBON, CERAMIC, VITON	60A	FRICTION DRIVE - CARBON, CERAMIC, BUNA-N	
		61J	FRICTION DRIVE - SiC, SiC, VITON	
	LIPSEAL - BUNA-N	65A	LIPSEAL - VITON	
		65C	LIPSEAL - VITON, HEAVY DUTY	
BACKHEAD MOTOR MOUNTING DIAMETER	4-1/2" - MOTOR FRAMES 56C, 143TC, 145TC, 182C, 184C	70A	BACKHEAD ADAPTER MOTOR MOUNTING DIAMETER 8-1/2" FOR MOTOR FRAMES 182TC, 184TC, 213C, 215C ③ FOR MOTOR FRAMES 213TC, 215TC, 254C ④	

Consult factory for optional backhead thrust washer materials.

CONSULT FACTORY FOR ADDITIONAL OPTIONS

① 56C MOTOR FRAME REQUIRES 5/8" BORE SHAFT. USE STANDARD 50 OR OPTIONAL 50H.

② 143TC, 145TC, 182C AND 184C MOTOR FRAMES REQUIRE 7/8 BORE SHAFT. SELECT OPTION 50A OR 50J.

③ "G" HYDRAULIC SIZE ONLY: 182TC, 184TC, 213C AND 215C MOTOR FRAMES REQUIRE 1-1/8 BORE SHAFT. MUST SELECT OPTION 70A AND OPTION 50B or 50K.

④ "G" HYDRAULIC SIZE ONLY: 213TC, 215TC, AND 254C MOTOR FRAMES REQUIRE 1-3/8 BORE SHAFT. MUST SELECT OPTION 70A AND OPTION 50C or 50L.

⑤ MAX. VISCOSITY 15,000 SSU. MAX DIFFERENTIAL 100 PSI.

⑥ 24 mm BORE IS FOR AE90, 28 mm BORE IS FOR AE100/112. IN EITHER CASE, MUST SELECT ADAPTOR 70A.

© Copyright by the Gorman-Rupp Co.

Dimensions

* STANDARD DIMENSION
† 90° HOUSING

MOTOR FRAMES 56C, 143TC, 145TC, 182C, 184C

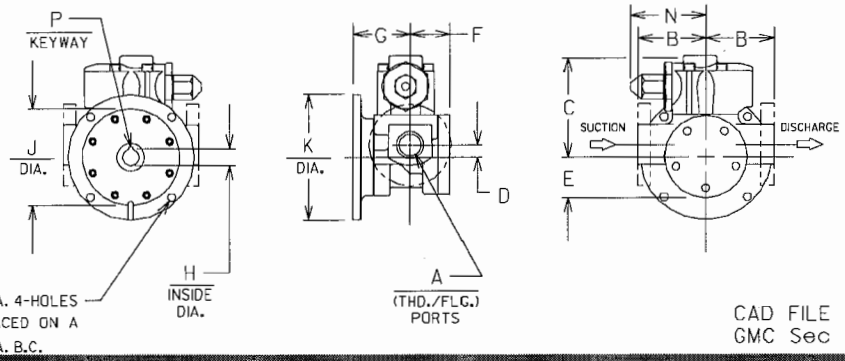

CAD FILE No.:
GMC Sec 520 Pg 104.dgn

MODEL NUMBERS	PUMP DIMENSIONS - INCHES [MM]							PUMP MOUNTING DIMENSIONS						
	A	B	C	D	E	F	G	H	J	K	L	M	N	P
GMC D	1"	2.50 † [64] 2.75 * [70]	5.19 [132]	.62 [16]	2.67 [68]	2.73 [69]	2.79 [71]	.62 * [16] .88 [22]	4.50 [114]	6.50 [165]	.41 [10]	5.88 [149]	3.58 [91]	.19 x 1.66 [5 x 42]
GMC G	1-1/2" 2"	3.50 † [89] 3.75 * [95]	6.00 [152]	.62 [16]	3.25 [82]	3.34 [85]	2.86 [73]	.62 * [16] .88 [22]	4.50 [114]	6.50 [165]	.41 [10]	5.88 [149]	3.62 [92]	.19 x 1.69 [5 x 43]

OPTIONAL (WITH ADAPTOR PLATE) MOTOR FRAMES 182TC, 184TC, 213C, 213TC, 215C, 215TC, 254C, AE90, AE100, AE112

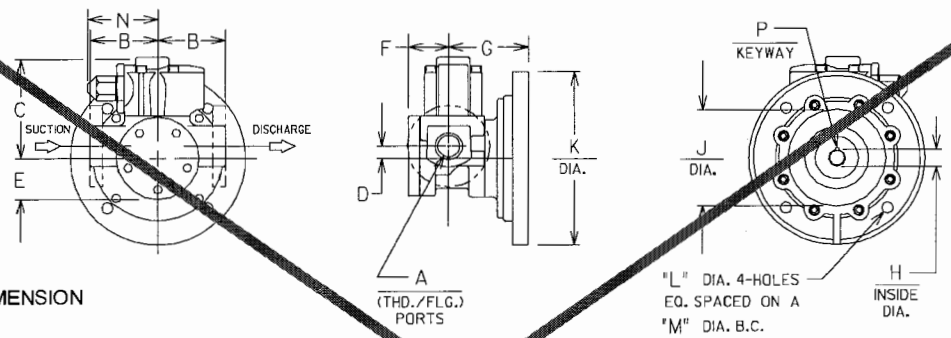

* STANDARD DIMENSION
† 90° HOUSING

MODEL NUMBERS		PUMP DIMENSIONS - INCHES [MM]							PUMP MOUNTING DIMENSIONS						
		A	B	C	D	E	F	G	H	J	K	L	M	N	P
GMC D [Metric]	AE90	1"	[64] † [70] *	[132]	[16]	[68]	[69]	[117]	[24]	[130]	[200]	[12]	[165]	[91]	[8 x 46]
	AE110/112								[28]	[180]	[250]	[15]	[215]		[8 x 56]
GMC G		1-1/2" 2"	3.50 † [89] 3.75 * [95]	6.00 [152]	.62 [16]	3.25 [82]	3.34 [85]	4.62 [117]	1.12* [28] 1.38 [35]	8.50 [216]	9.00 [229]	.53 [14]	7.25 [184]	3.62 [92]	.25 x 2.12 [6 x 54] .31 x 2.53 [8 x 64]
GMC G [Metric]	AE90							[119]	[24]	[130]	[200]	[12]	[165]		[8 x 46]
	AE110/112								[28]	[180]	[250]	[15]	[215]		[8 x 56]

SUPERSEDES ALL PREVIOUS ISSUES
© Copyright by the Gorman-Rupp Co.

OM—04384—04
November 11, 2002
Rev. D 08-01-05

INSTALLATION, OPERATION, AND MAINTENANCE MANUAL

GORMAN-RUPP PUMPS

ROTARY GEAR PUMPS

MODELS
GMC SERIES IRON PUMPS Construction Codes 3 or 4-B

THE GORMAN-RUPP COMPANY MANSFIELD, OHIO
GORMAN-RUPP OF CANADA LIMITED ST. THOMAS, ONTARIO, CANADA Printed in U.S.A.

Copyright by the Gorman-Rupp Company

TABLE OF CONTENTS

INTRODUCTION . . . . . PAGE I — 1

SAFETY — SECTION A . . . . . PAGE A — 1

INSTALLATION — SECTION B . . . . . PAGE B — 1

PUMP MODEL DESIGNATION . . . . . PAGE B–1
PREINSTALLATION INSPECTION . . . . . PAGE B–2
STORAGE . . . . . PAGE B–2
Flushing . . . . . PAGE B–2
PUMP INSTALLATION . . . . . PAGE B–3
Lifting . . . . . PAGE B–3
Positioning The Pump . . . . . PAGE B–3
Mounting . . . . . PAGE B–3
Piping . . . . . PAGE B–3
Strainers . . . . . PAGE B–4
Gauges . . . . . PAGE B–4
Sealing . . . . . PAGE B–4
Valves . . . . . PAGE B–4
Barrier Liquids for Dual Mechanical Seals . . . . . PAGE B–4
ALIGNMENT . . . . . PAGE B–4
ELECTRICAL CONNECTIONS . . . . . PAGE B–4

OPERATION — SECTION C . . . . . PAGE C — 1

PUMP OPERATION . . . . . PAGE C–1
PRE-OPERATION . . . . . PAGE C–1
Before Starting The Pump . . . . . PAGE C–1
Checking Pump Rotation . . . . . PAGE C–1
STARTING . . . . . PAGE C–2
OPERATION . . . . . PAGE C–2
Liquid Temperature . . . . . PAGE C–2
Overheating . . . . . PAGE C–2
Checking Gauges . . . . . PAGE C–2
Strainer Check . . . . . PAGE C–2
Leakage . . . . . PAGE C–3
PRESSURE RELIEF VALVE ADJUSTMENT . . . . . PAGE C–3
Cracking Pressure . . . . . PAGE C–3
Complete By-Pass Pressure . . . . . PAGE C–3
STOPPING . . . . . PAGE C–3

TROUBLESHOOTING — SECTION D . . . . . PAGE D — 1

PREVENTIVE MAINTENANCE . . . . . PAGE D–4

PUMP MAINTENANCE AND REPAIR — SECTION E . . . . . PAGE E — 1

PARTS KEY:
Typical GMC Pump Model . . . . . PAGE E–3
ASSEMBLED GMC PUMP MODEL ILLUSTRATION . . . . . PAGE E–4
PUMP DISASSEMBLY . . . . . PAGE E–5
Preparaing for Disassembly . . . . . PAGE E–5

TABLE OF CONTENTS
(continued)

Pressure Relief Valve (10) . . . . . PAGE E–6
Coverplate Kit (11) . . . . . PAGE E–6
Head/Idler Kit (01 and 02) . . . . . PAGE E–6
Backhead Kit Removal (06) . . . . . PAGE E–7
Rotor/Shaft Removal (03) . . . . . PAGE E–7
Seal Removal (05) . . . . . PAGE E–7
Housing Assembly (04) . . . . . PAGE E–7
PUMP REASSEMBLY . . . . . PAGE E–7
Cleaning and Inspection . . . . . PAGE E–8
Bushing Preparation . . . . . PAGE E–8
Housing Assembly (04) . . . . . PAGE E–8
Rotor/Shaft Assembly (03) . . . . . PAGE E–8
Head/Idler Assembly (01 and 02) . . . . . PAGE E–9
Coverplate Kit (11) . . . . . PAGE E–9
Seal Installation (05) . . . . . PAGE E–9
Backhead Kit (06) . . . . . PAGE E–9
SETTING END CLEARANCE . . . . . PAGE E–10
RELIEF VALVE DISASSEMBLY . . . . . PAGE E–10
RELIEF VALVE REASSEMBLY . . . . . PAGE E–11
Relief Valve Installation (10) . . . . . PAGE E–12

SEAL APPENDIX — SECTION F . . . . . PAGE F–1

Standard Friction Drive And Optional 60A And 61J Mechanical Seals . . . . . PAGE F–1
Standard Lip (And Optional 65A And 65C) Seal . . . . . PAGE F–3

BACKHEAD ADAPTOR APPENDIX — SECTION G . . . . . PAGE G–1

Backhead Adaptor Removal and Installation . . . . . PAGE G–2

O-RING APPENDIX — SECTION H . . . . . PAGE H–1

INTRODUCTION

Thank You for purchasing a Gorman-Rupp Rotary Gear Pump. This manual is designed to help you achieve the best performance and longest life from your Gorman-Rupp Rotary Gear pump. **Read this manual** carefully to learn how to safely install, operate and repair your pump. Failure to do so could result in personal injury or damage to the pump.

This manual will alert personnel to known procedures which require special attention, to those which could damage equipment, and to those which could be dangerous to personnel. However, this manual cannot possibly provide detailed instructions and precautions for each specific application or for every situation that might occur during maintenance of the unit. Therefore, it is the responsibility of the owner, installer and/or maintenance personnel to ensure that applications and/or maintenance procedures not addressed in this manual are performed only after establishing that neither personal safety nor pump integrity are compromised by such applications or procedures.

In addition to this manual, a separate **Parts List** is shipped with the pump. Refer to the Parts List when ordering parts.

If your pump is furnished with a drive unit, refer to the drive unit manufacturer's installation and operation instructions in the literature accompanying the pump.

These pumps can transfer a wide range of light, medium, and heavy viscosity liquids, depending on design and components. **Some models are not recommended for use with water; others when fitted with specific options, may be used with water; consult the factory.**

If there are any questions regarding the pump or drive unit which are not covered in this manual or in other literature accompanying this unit, please contact your Gorman-Rupp distributor or the Gorman-Rupp Company:

The Gorman-Rupp Company
P.O. Box 1217
Mansfield, Ohio 44901—1217
or:
Gorman-Rupp of Canada Limited
70 Burwell Road
St. Thomas, Ontario N5P 3R7

RECORDING MODEL AND SERIAL NUMBERS

Please record the pump model and serial number in the spaces provided below. Your Gorman-Rupp distributor needs this information when you require parts or service.

Pump Model: _____

Serial Number: _____

WARRANTY INFORMATION

The warranty provided with your pump is part of Gorman-Rupp's support program for customers who operate and maintain their equipment as described in this and the other accompanying literature. Please note that should the equipment be abused or modified to change its performance beyond the original factory specifications, the warranty will become void and any claim will be denied.

The following are used to alert personnel to procedures which require special attention, to those which could damage equipment, and to those which could be dangerous to personnel:

DANGER!

Immediate hazards which will result in severe personal injury or death. These instructions describe the procedure required and the injury which will result from failure to follow the procedure.

WARNING!

Hazards or unsafe practices which COULD result in severe personal injury or death. These instructions describe the procedure required and the injury which could result from failure to follow the procedure.

CAUTION

Hazards or unsafe practices which COULD result in minor personal injury or product or property damage. These instructions describe the requirements and the possible damage which could result from failure to follow the procedure.

NOTE

Instructions to aid in installation, operation, and maintenance or which clarify a procedure.

SAFETY — SECTION A

This information is specific to Gorman-Rupp GMC Series Rotary Gear Pumps. **It applies throughout this manual and any manual or literature accompanying the pump.**

In addition to this manual, see the separate literature covering the drive unit used to operate this pump.

CAUTION

Pumps and related equipment must be installed and operated according to all national, local and industry standards.

WARNING!

This manual will alert personnel to known procedures which require special attention, to those which could damage equipment, and to those which could be dangerous to personnel. However, this manual cannot possibly provide detailed instructions and precautions for each specific application or for every situation that might occur during maintenance of the unit. Therefore, it is the responsibility of the owner, installer and/or maintenance personnel to ensure that applications and/or maintenance procedures not addressed in this manual are performed only after establishing that neither personal safety nor pump integrity are compromised by such applications or procedures.

WARNING!

Before attempting to install, operate, or service this pump, familiarize yourself with this manual, and with all other literature shipped with the pump. Unfamiliarity with all aspects of pump operation covered in this manual could lead to destruction of equipment, injury, or death.

WARNING!

The standard version of this pump is designed to handle a wide range of light, medium, and heavy viscosity liquid, depending on design and components, and a range of temperatures when fitted with different seals. Do not apply at higher temperatures that the seal will handle. Do not attempt to pump liquids which may damage the pump or endanger personnel as a result of pump failure; consult the factory for chemical compatibility.

WARNING!

If the pump and motor are furnished mounted on a base, make certain that all lifting devices have adequate capacity. If chains or cables are used in lifting, make certain that they are positioned so as not to damage components, and so that the load will be balanced.

WARNING!

After the pump has been installed, make certain that the pump and all piping or hose connections are secure before operation. Loose connections can result in damage to the equipment and serious injury to personnel.

WARNING!

Never operate the pump without a pressure relief valve installed on the pump or in the discharge piping. Make certain that pump-mounted pressure relief

valves are installed with their adjusting ends toward the suction port. If bi-rotational operation is required, a pressure relief device must be provided for both directions of flow. Operation without a pressure relief valve or with an improperly installed relief valve could cause the pump to explode, resulting in serious injury or death to personnel.

WARNING!

Before attempting to open or service the pump:

1. **Familiarize yourself with this manual.**
2. **Lock out incoming power to the drive unit to ensure that the pump will remain inoperative.**
3. **Allow the pump to completely cool if overheated.**
4. **Close the discharge and suction valve (if used).**

WARNING!

An overheated pump can cause severe burns and injury. If overheating occurs:

1. **Stop the pump immediately.**
2. **Allow the pump to completely cool.**
3. **Refer to the instructions in this manual before restarting the pump.**

WARNING!

Do not remove plates, covers, gauges, pipe plugs or fittings from an overheated pump. Vapor pressure within the pump can cause parts being disengaged to be ejected with great force. Allow the pump to completely cool before servicing.

WARNING!

This pump may be used to handle liquids which may cause serious illness or injury through direct exposure or emitted fumes. Wear protective clothing, such as rubber gloves, face mask and rubber apron, as necessary, before disconnecting or servicing the pump or piping.

INSTALLATION — SECTION B

Review all SAFETY information in Section A.

CAUTION

Pumps and related equipment must be installed and operated according to all national, local and industry standards.

Since pump installations are seldom identical, this section is intended only to summarize general recommendations and practices required to inspect, position, and arrange the pump and piping. If there are any questions concerning your specific installation, contact your Gorman-Rupp distributor or the Gorman-Rupp Company.

Most of the information applies to a flooded suction installation where liquid is supplied under pressure.

If the pump is positioned above the liquid in a static lift installation, information such as mounting, piping configuration and priming must be tailored to specific conditions.

CAUTION

These pumps are not recommended for use with water. Some models when fitted with specific options may be used with water; consult the factory.

PUMP MODEL DESIGNATION

Following is a description of the model numbering system for Gorman-Rupp rotary gear pumps. Rotary gear pump model numbers include design style, port size, hydraulic size and construction code.

Typical Pump Model

GHS	1 1/2	GF	32
Design Style	Port Size	Hydraulic Size	Construction Code

Design Style: Gorman-Rupp rotary gear pumps are available in five basic designs:

- GMC — Medium Duty — Compact
- GMS — Medium Duty
- GHC — Heavy Duty — Compact
- GHS — Heavy Duty
- GHA — Abrasive Duty

Port Size: Gorman-Rupp rotary gear pumps are available in port sizes from 1 to 6 inches, depending on the design style. Consult your Gorman-Rupp distributor or the factory for additional sizes.

Hydraulic Size: The first letter in the hydraulic size is a rotor diameter code. The second letter indicates tooth length.

Construction Code: Construction Codes for Gorman-Rupp rotary gear pumps are as follows:

Code	Description
3	Iron w/Mechanical Seal(s)
4	Iron w/Packing or Lip Seal(s)
9	316 SST w/Mechanical Seal(s)
10	316 SST w/Packing or Lip Seal(s)
32	Steel w/Mechanical Seal(s)
38	Steel w/Packing or Lip Seal(s)

Theoretical Displacement: Table B-1 indicates theoretical displacement values for each hydraulic size.

NOTE

Actual capacities and recommended shaft speeds vary according to application. Consult your Gorman-Rupp distributor or the factory for additional information.

Table B-1. Theoretical Displacement

Hydraulic Size	Theoretical Displacement Per Revolution	
	Gallons	Centimeters^3
DC	0.00568	21.486
DE	0.00704	26.646
GC	0.00967	36.619
GF	0.01405	53.186
GH	0.01915	72.479
GJ	0.02317	87.700
JG	0.03579	135.49
JJ	0.05159	195.28
JL	0.07078	267.94
JP	0.10078	381.48
NK	0.10665	403.71
NM	0.14173	536.51
NP	0.17681	669.31
RM	0.24030	909.65
RP	0.29979	1134.8
RR	0.35927	1360.0
RS	0.41876	1585.1
SR	0.65752	2489.0
SU	1.10240	4173.2
TU	1.91280	7240.7

PREINSTALLATION INSPECTION

The pump assembly was inspected and tested before shipment from the factory. Before installation, check for damage which may have occurred during shipment. Check as follows:

a. Inspect the pump assembly for cracks, dents, damaged threads, and other obvious damage.

b. Check for loose attaching hardware. Since gaskets tend to shrink after drying, check for loose hardware at the mating surfaces.

c. Carefully read all tags, decals, and markings on the pump assembly, and perform all duties indicated.

STORAGE

CAUTION

Due to the extreme close machining tolerances within rotary gear pumps, proper storage before installation is essential to prevent damage to the pump.

If the pump will not be immediately installed, follow these procedures or damage to the pump will occur.

a. **Do not** flush the pump. Ensure that the port plugs shipped with the pump remain in place until piping is installed to help prevent dust or other foreign objects from entering the pump.

b. Pumps that will not be installed for an extended period should be stored indoors if possible. The factory-installed port plugs will **not** ensure protection from excessive humidity, splash water or rain. In very humid or wet conditions, install air-tight plugs in the ports and fill the pump completely with a lubricating preservative liquid that is compatible with the liquid to be pumped.

c. Pumps stored outdoors **must be fully preserved** as described above, **completely covered** with plastic or other water-tight material, and the covering anchored to ensure that it will not be blown off.

Flushing

CAUTION

Clean piping is essential because of close-tolerance moving parts in this pump. Flush all dirt, grit, weld beads or scale from the suction piping before installing the pump. Damage to the pump because of debris in the suction line is not covered by the pump warranty.

Before shipment, the pump may have been tested using a petroleum-based preservative. If flushing is required, do not do so until just before installation; the test oil protects close-tolerance pump parts from corrosion.

WARNING!

Most cleaning solvents are toxic and

flammable. Use them only in a well ventilated area free from flame, sparks, and excessive heat. Read and follow all precautions printed on solvent containers.

To flush the pump, use an approved solvent compatible with the liquid being pumped. **Make certain that the solvent will not attack pump components, particularly seals and gaskets.**

PUMP INSTALLATION

Pump dimensions are shown in the separate Pump Specification Bulletin.

WARNING!

Never operate the pump without a pressure relief valve installed on the pump or in the discharge piping. Make certain that pump-mounted pressure relief valves are installed with their adjusting ends toward the suction port. If bi-rotational operation is required, a pressure relief device must be provided for both directions of flow. Operation without a pressure relief valve or with an improperly installed relief valve could cause the pump to explode, resulting in serious injury or death to personnel.

Lifting

Remove suction and discharge hose and piping before attempting to lift the pump. Use lifting equipment with a capacity of at least five times the total weight of the equipment being lifted.

Positioning The Pump

Locate the pump as close as possible to the liquid being pumped. Locating the pump below the liquid source will help self-priming and reduce the possibility of cavitation.

Mounting

The pump may be shipped alone, mounted on a base, or with pump and motor mounted on a base. Install the pump and motor on a base before mounting the base on a foundation.

Mount the base on a foundation that will provide permanent, rigid support for the pump, and will be heavy enough to absorb any vibration, strain or shock.

Piping

Before establishing suction and discharge lines, determine pump port positions and rotation. Figure B−1 shows typical port positions for the standard 180° housing; if you have selected a 90° housing port option, your port positions will be different.

Begin piping layout at the pump, and work toward the source of supply and the point of discharge.

Either hose or rigid pipe may be used to make connections. If rigid piping is used, install expansion joints to protect the pump from vibration and thermal expansion in the piping. Do not use expansion joints or flexible connectors to adjust misaligned piping.

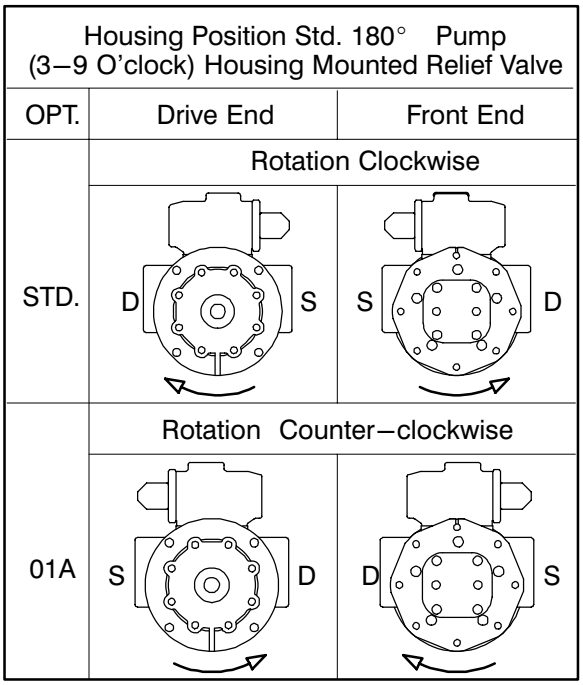

Figure B-1. Typical Port Positions & Rotation

The discharge and suction lines must be independently supported to avoid vibration and strain on the pump. For maximum pumping capacity, keep the lines as short and straight as possible. El-

bows and fittings used in the lines increase friction losses; minimize their use. Reducers used in suction lines should be the eccentric type installed with the flat part uppermost to avoid creating air pockets.

Before tightening a connection or flange, align it exactly with the pump port. Never pull a pipe line into place by tightening the flange bolts and/or couplings.

Strainers

Because of the close-tolerance moving parts of this pump, it is recommended that a strainer be installed in the suction line. The strainer should be large enough to prevent excessive vacuum, and capable of operating under high vacuum without collapsing. The net open area of the strainer screen depends on liquid viscosity and desired flow rate; in any case, the sum of the area of all the holes in the screen should be three to five times the area of the suction pipe.

Gauges

To monitor operation and assist in troubleshooting, a vacuum gauge and a pressure gauge should be installed on the pump.

Sealing

Even a slight leak will affect priming, head, and capacity, especially in a suction lift application. Seal all piping joints, valves and gauges with pipe dope or teflon tape. The sealing material should be compatible with the liquid being pumped.

Valves

To avoid air pockets, install piping valves with the stem horizontal.

To prevent leakage during shutdown, install a shutoff valve in the discharge line, particularly on a flooded suction application. Shutoff valves are not recommended for suction lines.

It is **not** recommended that a foot valve be installed at the end of the suction line. If desired to install a foot valve, consult the factory.

When handling very hot or cold liquids, install a pressure relief valve in any part of the system that can be valved off or isolated; this will protect piping against damage from liquid thermal expansion or contraction from temperature changes during shutdown.

ALIGNMENT

WARNING!

Make certain that power to the drive unit is disconnected before attempting to connect the pump drive; otherwise, personal injury may result.

NOTE

*See **ROTATION** in Section C before mounting the pump on the base.*

Because this pump is designed to be driven by a close-coupled motor, it is imperative that the user make certain that the motor drive shaft is parallel and concentric with the rotor/shaft assembly.

ELECTRICAL CONNECTIONS

Before connecting the motor to the incoming power, check that the electrical service available matches the pump motor requirements stamped on the motor nameplate.

WARNING!

The electrical power used to operate this pump is high enough to cause injury or death. Obtain the services of a qualified electrician to make all electrical connections.

WARNING!

Do not install and operate a non-explosion proof motor in an explosive atmosphere. Install, connect, and operate the motor in accordance with The National Electric Code and all local codes. If there is a conflict between the instructions in the manual accompanying the unit and The National Electric Code or the applicable local code, The National or local code shall take precedence.

OPERATION — SECTION C

Review all SAFETY information in Section A.

Follow the instructions on all tags, labels and decals attached to the pump.

PUMP OPERATION

WARNING!

Pressure relief valves are designed to operate as safety devices and should never be used to regulate liquid flow. Otherwise, the pump or piping may explode and cause personal injury or death.

PRE-OPERATION

Make certain that all instructions in **INSTALLATION,** Section B have been carried out.

CAUTION

The standard version of the pump is designed to handle a wide range of light, medium, and heavy viscosity liquids, depending on design and components. Do not install the pump in a service with higher liquid temperatures than what it was designed; otherwise, pump components and operation may be affected. For temperature range consult The Gorman-Rupp Company.

Before Starting The Pump

WARNING!

Never operate the pump against a closed suction or discharge valve. The pump will overheat, and may rupture or explode, causing personal injury or death.

Open all valves in the suction and discharge lines, and close all drain valves.

Consult the drive manufacturer's operating manual before attempting to start the drive.

In a suction lift, fill the pump housing with liquid to seal clearances and to lubricate.

Checking Pump Rotation

Correct rotation of your pump is shown on the pump serial plate or direction arrow plate.

CAUTION

In applications with a single direction of flow and a single pump-mounted pressure relief valve, make certain that the drive unit turns the pump in the correct direction of rotation. Otherwise, the pump-mounted pressure relief valve will not function.

Follow the drive unit manufacturer's instructions, jog the pump motor **briefly**, and check rotation.

CAUTION

Gorman-Rupp rotary gear pumps are bidirectional; however, the pumps are manufactured to rotate in one specific direction. If rotation is to be changed, the pressure relief valve must be re-installed with the cap pointing toward the suction port. Additionally, if the discharge pressure is greater than the shaft seal rating (consult your Gorman-Rupp distributor), the pressure relief plugs in the back of the housing must be switched (see **Housing Assembly** under **PUMP REASSEMBLY**, Section E).

If a 3-phase motor is being used and rotation is incorrect, have a qualified electrician interchange any two of the 3-phase wires to change the direction of rotation. If a 1-phase motor is being used and rotation is incorrect, consult the motor manufacturer's literature.

STARTING

Start the drive unit as indicated in the manufacturer's instructions and observe the suction and discharge gauges. If the pump does not deliver liquid within one minute, stop the drive unit. **Do not** operate the pump more than one minute without liquid in it; dry operation will damage or destroy the pump.

CAUTION

Although this pump is self-priming, never operate it dry. Dry operation could cause galling, seizing, damage to the seal or excessive wear of rotating parts.

Review the previous steps outlined in **PRE-OPERATION** and review **TROUBLESHOOTING**, Section D. If everything appears normal, add liquid to the pump housing to assist priming and start the driver again.

If the pump does not deliver liquid within two minutes, stop the pump; it may be necessary to vent the discharge line until liquid begins to flow.

If the pump still does not deliver after consulting **TROUBLESHOOTING** and venting the discharge line, contact your local Gorman-Rupp Rotary Gear Distributor or the factory.

OPERATION

NOTE

If the pump malfunctions or does not meet operating specifications, refer to ***TROUBLESHOOTING — Section D****.*

A change in operating noise when liquid first enters the pump is normal. After the pump is fully operational, monitor it for any unusual noises or vibration; if either occurs, shut the pump down immediately.

Liquid Temperature

Do not install the pump in a service with higher liquid temperatures than what it was designed. Introducing hot liquid into a cold pump will expand parts unevenly, causing excessive wear, pump failure, and operation may be affected. This thermal shock can be reduced by gradually heating the liquid being introduced into the pump. If it is not possible to heat the liquid, use heat tape and/or insulation to heat the pump.

High temperature bushings as well as optional jackets which may be used to heat or cool the pump are available options for many models.

Overheating

Overheating can occur if the pump is operated with valves in the suction or discharge lines closed. Operating against closed valves could bring the liquid to a boil, build pressure, and cause the pump to rupture or explode. If overheating occurs, stop the pump and allow it to completely cool before servicing.

CAUTION

Do not remove plates, covers, gauges, pipe plugs or fittings from an overheated pump. Vapor pressure within the pump can cause parts being disengaged to be ejected with great force. Allow the pump to completely cool before cooling.

Checking Gauges

Monitor vacuum and pressure gauge readings to ensure that the pump is operating within normal range and delivering full flow.

Strainer Check

If a strainer has been installed in the suction line, monitor vacuum gauge readings to detect blockage. Check the strainer if flow rate begins to drop.

WARNING!

Never introduce air or steam pressure into the pump housing to remove a blockage. This could result in personal injury or damage to the equipment. If

backflushing is absolutely necessary, limit liquid pressure input to 50% of the maximum permissible operating pressure shown in the pump performance data.

Leakage

No leakage should be visible at pump mating surfaces or at pump connections or fittings. Keep all line connections and fittings tight to maintain maximum efficiency.

If your pump is equipped with a packing seal, the packing is lubricated by the liquid being pumped. Some leakage around the packing seal is normal. Packing pumps **must leak slightly** to cool and lubricate the shaft and to allow the shaft to turn freely.

Wait until the pump has run long enough to reach its normal operating temperature to adjust the gland nuts. Adjust the nuts only tight enough to reduce excessive leakage.

PRESSURE RELIEF VALVE ADJUSTMENT

Some pumps are not provided with a pressure relief valve. A pressure relief valve must be installed on the pump or in the discharge piping to ensure safe operation. Otherwise, the pump may be damaged and personnel injured.

CAUTION

If operating at high temperatures, allow the pump to completely cool before attempting any adjustments.

Cracking Pressure

Cracking pressure is the pressure at which the pressure relief valve first begins to open and by-pass fluid. The nominal cracking pressure of the relief valve provided with this pump is set at the factory and is indicated on the tag attached to the relief valve.

If the nominal cracking pressure set at the factory must be changed, see Table E-2 and instructions in **Section E - MAINTENANCE AND REPAIR**.

Complete By-pass Pressure

Complete by-pass pressure is the maximum pressure the pump will see when all the pumped fluid is being by-passed through the pressure relief valve. This pressure will vary depending on the cracking pressure setting, liquid viscosity, and pump speed (pump capacity).

To determine the complete by-pass pressure, refer to the pump performance chart or consult the factory.

WARNING!

Do not remove the adjusting screw jam nut; with the jam nut removed the relief valve spring(s) can be compressed too far for the valve to open. If the valve does not open, excessive pressure can develop, causing damage to the pump and possible injury to personnel.

STOPPING

If the pump will be out of service for an extended length of time, particularly when handling non-lubricating liquids, drain the system and flush the pump and piping with an oil-based preservative to protect close-tolerance pump parts.

When handling liquids that solidify when at rest (tar, glue, etc.), flush the pump and piping with an approved solvent compatible with the pump components and the liquids being pumped.

TROUBLESHOOTING — SECTION D

Review all SAFETY information in Section A.

WARNING!

Before attempting to open or service the pump:

1. **Familiarize yourself with this manual.**
2. **Allow the pump to completely cool if overheated.**
3. **Check the temperature before opening any covers, plates, or plugs.**
4. **Close the suction and discharge valves.**
5. **Drain the pump.**

TROUBLESHOOTING WITH GAUGES

Most pump or system malfunctions can be detected by installing vacuum suction and discharge pressure gauges. Read the gauges and refer to the following information for interpretation of the gauge readings. For additional troubleshooting procedures, see the **TROUBLESHOOTING CHART**.

Vacuum Gauges

HIGH READING

Suction valve closed, suction line blocked, foot valve jammed, strainer blocked.
Liquid too viscous.
Lift too high.
Suction line undersized.

LOW READING

Air leak in suction line.
End of suction line not submerged.
Pump parts worn or defective.
Pump needs priming.

ERRATIC READING

Liquid overheated, vaporizing.
Liquid entering intermittently, suction air leak, end of suction line not submerged.
Vibration from cavitation, misalignment, damaged parts.

Pressure Gauges

HIGH READING

Liquid too viscous.
Discharge line undersized or too long.
Discharge valve partially closed.
Strainer blocked.
Relief valve pressure set too high.
Thermal changes in liquid.

LOW READING

Relief valve pressure set too low.
Internal valve not seating properly.
Pump bypass partially open.
End clearance too great.
Pump parts worn or defective.

ERRATIC READING

Cavitation.
Liquid entering intermittently, suction air leak, End of suction line not submerged.
Drive misalignment causing vibration.

TROUBLESHOOTING CHART

TROUBLE	POSSIBLE CAUSE	PROBABLE REMEDY
PUMP FAILS TO PRIME OR LOSES PRIME	Air leak in suction line; end of suction line not submerged; foot valve blocked or jammed; insufficient liquid in sump or tank.	Check and correct as required.
	Suction strainer clogged.	Check strainer.
	Shaft seal leaking; gaskets, O-rings worn.	Check vacuum gauge; disassemble pump and replace faulty parts.
	Leaking relief valve.	Disassemble and repair.
	Suction lift too high.	See **INSTALLATION, SECTION B** and check piping.
	Pump “starving” or liquid vaporizing in suction line.	Increase suction pipe size or reduce length; position pump below liquid level.
	Pump rotation incorrect.	See **OPERATION, SECTION C** and check rotation.
	Pump speed too slow.	Check driver speed.
	Housing dry.	Add liquid to housing, see **OPERATION, SECTION C**.
PUMP DOES NOT DELIVER RATED DISCHARGE OR CAPACITY	Air leak in suction line; end of suction line not submerged; foot valve blocked or jammed; insufficient liquid in sump or tank.	Check and correct as required.
	Shaft seal leaking; gaskets, O-rings worn.	Check vacuum gauge; disassemble pump and replace faulty parts.
	Relief valve pressure set too low.	Readjust.
	Suction or discharge lines blocked; suction or discharge valves closed.	Check strainer, valves and piping.
	Pump speed too slow.	Check driver speed; check belts/couplings.
	Pump “starving” or liquid vaporizing in suction line.	Increase suction pipe size or reduce length; position pump below liquid level.
	Rotating parts worn or damaged; improper end clearance.	Replace defective parts; see **SETTING END CLEARANCE** in **Maintenance And Repair, Section E**.
PUMP REQUIRES TOO MUCH POWER	Insufficient end clearances.	Readjust clearance; see **SETTING END CLEARANCE** in **Maintenance and Repair, Section E**.
	Pump speed too high.	Reduce driver output.
	Internal parts worn.	Disassemble pump and inspect.
	Discharge line undersized and/or too long.	Increase size, decrease length.

TROUBLESHOOTING CHART (Cont.)

TROUBLE	POSSIBLE CAUSE	PROBABLE REMEDY
PUMP REQUIRES TOO MUCH POWER (Cont.)	Pump and/or drive mounting not secure; drive misaligned.	Tighten mounting hardware; realign drive.
	Power source undersized.	Check power requirements for application; resize as required.
	Liquid in pump solidified.	Clear or heat.
	Insufficient internal clearances.	Consult factory.
EXCESSIVE NOISE OR VIBRATION	Pump and/or piping not secure; drive misaligned.	Anchor base or piping, realign drive.
	Pumping entrained air.	Check liquid level.
	Pump “starving” or liquid vaporizing in suction line.	Increase suction pipe size or reduce length; position pump below liquid level.
	Relief valve chatter.	Increase pressure setting.
	Rotating parts worn or damaged; improper end clearance.	Replace defective parts; check end clearance.
	Pump operating outside designed operating range.	Check discharge head and flow; adjust as required to meet performance specifications.
	Lubrication required.	Add lubricant, as needed.
EXCESSIVE WEAR	Corrosive liquid.	Check local distributor or factory for parts compatibility with liquid; check liquid for contamination.
	Abrasive liquid.	Consult factory.
	Exceeding operating limits.	Check performance data in **Pump Specifications Bulletin**.
	Insufficient end clearance.	See **SETTING END CLEARANCE** in **Maintenance And Repair, Section E**.
	Pump running dry.	Add liquid to prime (**See Operation, Section C**); check liquid flow.
	Pump and/or drive mounting not secure; drive misaligned; piping incorrectly installed.	Tighten mounting hardware; realign drive; check piping.
	Insufficient lubrication.	Add lubrication and maintain at proper level.

PREVENTIVE MAINTENANCE

Since pump applications are seldom identical, and pump wear is directly affected by such things as the abrasive qualities, pressure and temperature of the liquid being pumped, this section is intended only to provide general recommendations and practices for preventive maintenance. Regardless of the application however, following a routine preventive maintenance schedule will help assure trouble-free performance and long life from your Gorman-Rupp rotary gear pump. For specific questions concerning your application, contact your Gorman-Rupp distributor or the Gorman-Rupp Company.

Record keeping is an essential component of a good preventive maintenance program. The appearance of wearing parts should be documented at each inspection for later comparison. Also, if records indicate that a certain part (such as the seal) fails at the same duty cycle, this part can be checked and replaced before failure occurs.

Because of the tight tolerances within your rotary gear pump, wear between rotating parts is normal and expected. For new applications, a first inspection at 250 hours will give insight into the wear rate for your particular application. Subsequent inspections should be performed at regular intervals of 2000 hours. Critical applications should be inspected more frequently.

Check the thrust washer (medium duty models), idler bushing, idler pin, idler assembly, shaft bushing and rotor/shaft assembly at each inspection. Wear patterns should be uniform, without evidence of deep or irregular grooves.

For packing pumps, periodic adjustment of the packing is required to keep leakage to a minimum (see the adjustment procedure described under **Leakage** in **Operation, Section C**). Do not overtighten. Replace the packing if leakage cannot be reduced by a slight adjustment.

If the pump is equipped with a backhead bearing (heavy duty models), inspect for free rotation of the shaft and rotor, and excessive endplay or radial movement of the shaft, which could indicate bearing wear. Remove the rotor adjusting sleeve assembly and inspect the bearing for damaged seals. Replacing the bearing at the first indication of a problem can extend the life of the pump and save considerable expense later to replace major components that can be damaged if the bearing is allowed to fail.

After extended service, adjustment of the clearance between the rotor and the head will normally improve performance (see the adjustment procedure in **Maintenance And Repair, Section E**).

If the pump is to be removed from service for repair, be sure to protect the internal components from rusting while the pump is disassembled and after reassembly if not immediately placed back into service.

MAINTENANCE AND REPAIR — SECTION E

MAINTENANCE AND REPAIR OF THE WEARING PARTS OF THE PUMP WILL MAINTAIN PEAK OPERATING PERFORMANCE.

Pump Model

Your pump model number and serial number are shown on the **Parts List**, furnished as a separate document with this manual.

Below the pump model number on the **Parts List**, is a grouping of several alpha-numeric codes. This code identifies the optional features of the pump. **Be sure** to include this grouping, along with the model number and serial number, when ordering parts.

The sectional views cover disassembly and reassembly for the pump models shown below. Refer to the **Parts List** for your specific pump model.

The Following Pumps Are Covered By This Manual.

GMC SERIES PUMPS

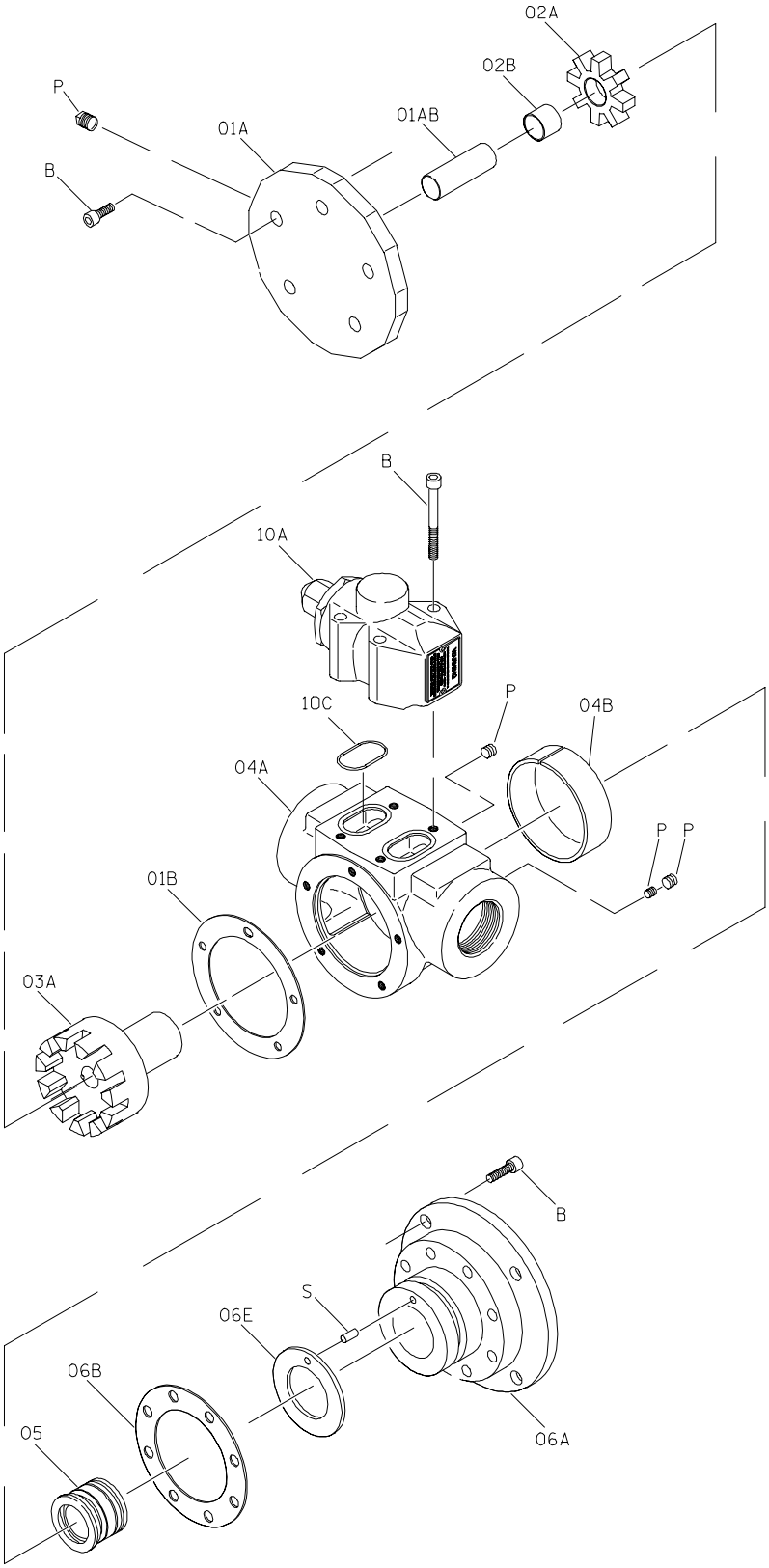

Shown: Standard Model With 180° Ports and Housing-Mounted Relief Valve. Also Available With 90° Ports, BackHead Adaptor, and Head-Mounted Relief Valve. A Coverplate Kit Replaces Either Relief Valve When Not Used.

NOTE: Refer to **Seal Appendix, Section F** for details of the seal assembly and related components.

Figure E−1. Typical GMC Pump Models

PARTS KEY FOR FIGURE E-1

Note: Item numbers cross reference to specific part numbers on the separate **Parts List**.

ITEM NO.	PART NAME	ITEM NO.	PART NAME
01	HEAD KIT	08	FOOT BRACKET KIT
01A	—HEAD ASSEMBLY	08A	—FOOT BRACKET
01AA	—HEAD	B	—CAPSCREW
01AB ✳	—IDLER PIN	D	—NUT
P	—PIPE PLUG		
01B ✳	—GASKET SET	10	RELIEF VALVE KIT
B	—CAPSCREW	10A	—RELIEF VALVE ASSEMBLY
		10AA	—VALVE BODY
02	IDLER ASSEMBLY	10AB	—WARNING PLATE
02A	—IDLER	BM	—DRIVE SCREW
02B ✳	—BUSHING	B	—CAPSCREW
		10C ✳	—O-RING
03A	ROTOR/SHAFT ASSY		
			NOT SHOWN:
04	HOUSING ASSEMBLY	11	COVERPLATE KIT (IF REQ'D)
04A	—HOUSING	11A	—COVERPLATE ASSEMBLY
04B	—HOUSING BUSHING	11AA	—COVERPLATE
P	—PIPE PLUG	11AC	—WARNING PLATE
		BM	—DRIVE SCREW
05 ✳	SEAL ASSEMBLY (SEE SECTION F)	P	—PIPE PLUG
		K	—WASHER
06	BACKHEAD KIT	B	—CAPSCREW
06A	—BACKHEAD ASSEMBLY	10C ✳	—O-RING
06B ✳	—GASKET		
B	—SOCKET HD CAPSCREW	12	NAMEPLATE KIT
06E ✳	—THRUST WASHER	12A	—NAMEPLATE
S	—BACKHEAD PIN	BM	—DRIVE SCREW

✳ INDICATES RECOMMENDED SPARE PARTS

NOTE: Refer to **O-Ring Appendix, Section G** for O-ring identification and location.

PUMP DISASSEMBLY AND REASSEMBLY

Review all SAFETY information in Section A.

Follow the instructions on all tags, labels and decals attached to the pump.

This pump requires little service due to its rugged, minimum-maintenance design. However, if it becomes necessary to inspect or replace the wearing parts, follow these instructions which, unless otherwise specified, are keyed to the sectional view (see Figure E-1) and the accompanying parts list. Refer to the separate parts list accompanying your pump for part numbers.

In the following text, minor headings are followed by a number in parenthesis. This number represents the assembly for the item being discussed as identified in Figure E-1.

Before attempting to service the pump, disconnect the power source to ensure that it will remain inoperative. Remove the hardware securing the pump to the power source, and separate the power source and pump assembly. Retain all connection parts such as shaft keys, etc.

Close all valves in the suction and discharge lines. Disconnect the suction and discharge hose/piping.

For power source disassembly and repair, consult the literature supplied with the power source, or contact your local power source representative.

WARNING!

This manual will alert personnel to known procedures which require special attention, to those which could damage equipment, and to those which could be dangerous to personnel. However, this manual cannot possibly provide detailed instructions and precautions for each specific application or for every situation that might occur during maintenance of the unit. Therefore, it is the responsibility of the owner, installer and/or maintenance personnel to ensure that applications and/or maintenance procedures not addressed in this manual are performed only after establishing that neither personal safety nor pump integrity are compromised by such applications or procedures.

WARNING!

Do not attempt to service the pump unless all power to the power source has been disconnected; otherwise, serious personal injury or death could result.

PUMP DISASSEMBLY

WARNING!

This pump may be used to handle liquids which may cause serious illness or injury through direct exposure or emitted fumes. Wear protective clothing, such as rubber gloves, face mask and rubber apron, as necessary, before disconnecting or servicing the pump or piping.

CAUTION

Use caution when handling the idler (02A) and the rotor shaft assembly (03A). These parts have sharp edges which will grow sharper with use.

In the instructions which follow the **FRONT** is the head assembly end of the pump and the **REAR** is the drive (or backhead) end of the pump.

NOTE

It is strongly recommended that gaskets and O-rings be replaced whenever the pump is reassembled.

Preparing for Disassembly

The pump should be removed from the system piping and drained for servicing. Close all valves in the

suction and discharge lines to isolate the pump. Position drain pans and/or absorbant material under and around the pump suction and discharge ports. Disconnect the suction and discharge hose/ piping.

Remove the hardware securing the pump to the power source and separate the power source and pump assembly. Retain all connection parts such as shaft keys, etc.

Use a hoist and sling with sufficient capacity to position the pump in a suitably sized drain pan or surround the pump with absorbant material. Some pumps are equipped with drain plugs in the head and backhead. Remove the plug(s) and drain the pump before proceeding with disassembly.

Pressure Relief Valve (10)

If the pump is equipped with a pressure relief valve (10A), it can be mounted on either the head assembly (01A) or the housing assembly (04). Some models are equipped with one of each. Take note as to the direction in which the relief valve is mounted. To remove either style, remove the capscrews (B) securing the relief valve to the pump. The O-rings (O) may remain in the head (01A) or in the housing (04A). Remove and discard the O-rings. For relief valve maintenance, see **RELIEF VALVE DISASSEMBLY** followed by **RELIEF VALVE REASSEMBLY** at the end of this section.

Coverplate Kit (11)

(Figure E-1 And E-2)

The coverplate kit may be mounted on either the head assembly or the housing assembly. Removal is the same for either.

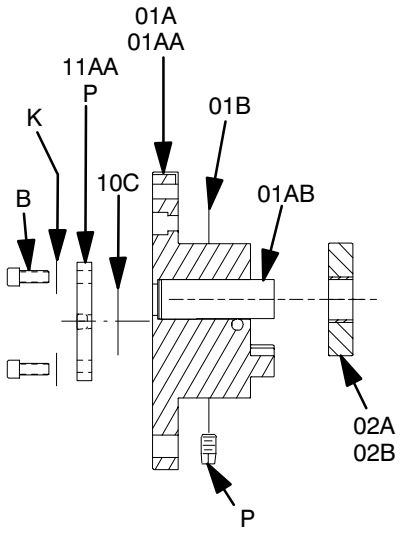

Figure E-2. Head Coverplate Kit, Head Kit And Idler Disassembly

Remove the hardware (B and K) securing the coverplate (11AA) to the head (01AA)or housing (04A). The O-rings (10C) may remain in the head or housing. Remove and discard the O-rings.

Head/Idler Kit (01 and 02)

(Figure E—1 and E-2)

CAUTION

Use caution to prevent the idler assembly from dropping off the idler pin; the idler may be damaged if it falls on a hard surface.

Disengage the hardware (B) and pull the head assembly (01A) from the housing assembly (04A, Figure E-1). Take care not to let the idler assembly (02) slide off the idler pin (01AB). Remove and discard the gasket (01B). Remove the check pipe plug (P) from the suction side of the head (01AA).

CAUTION

Use caution when handling the idler (02A) and the rotor shaft assembly (03A). These parts have sharp edges which will grow sharper with use.

NOTE

The idler bushing (02B) may be damaged during

removal. Do not remove the idler bushing unless replacement is required.

Remove the assembled idler (02) and bushing (02B) from the head assembly. Inspect the idler bushing for excessive wear or scoring. If replacement is required, use an arbor (or hydraulic) press and a suitably sized dowel to remove the idler bushing (02B) from the idler (02A).

To remove the idler pin (01AB), lay the head assembly (01A) on an arbor (or hydraulic) press with the idler pin (01AB) facing down and remove the idler pin (01AB) from the head (01AA).

Backhead Kit Removal (06)

(Figure E-1)

NOTE

Part or all of the seal assembly (5) will be removed with the backhead. If your pump is fitted with an optional backhead adaptor, the seal parts will be removed with the adaptor. Remove the backhead (or adaptor) as follows, check the ***Parts List*** *furnished with your pump to identify the seal, then refer to* ***Seal Appendix****,* ***Section F*** *for removal of the seal and related components.*

Remove the hardware and separate the backhead (or adaptor) from the motor.

If the pump is fitted with an optional backhead adaptor, remove the hardware securing the adaptor to the backhead. Carefully slide the adaptor off the rotor/shaft assembly. Remove and discard the gasket.

If the pump is not fitted with an adaptor, remove the screws (B) securing the backhead assembly (06A) to the housing assembly (04). Carefully slide the backhead out of the housing.

Remove and discard the gasket (06B) or O-ring (O) and the thrust washer (06E).

If replacement is required, pull the pin (S) from the backhead.

Rotor/Shaft Removal (03A)

Slide the rotor/shaft assembly (03A) out of the housing (04A). If your pump is equipped with a mechanical seal, the rotating portion of the seal assembly (05) will remain on the shaft. Refer to **Seal Appendix**, **Section F**, for seal replacement.

Due to close machine tolerances and assembly practices, the rotor/shaft is available only as an assembly. Further disassembly is not required.

Seal Removal (05)

The seal assembly (05) is available in a variety of configurations. Check the **Parts List** furnished with your pump to identify the seal, then refer to **Seal Appendix**, **Section F**, for removal of the seal and related components.

Housing Assembly (04)

NOTE

The housing bushing (04B) may be damaged during removal. Do not remove the housing bushing unless replacement is required.

Use an arbor (or hydraulic) press and a suitably sized dowel to remove the housing bushing.

NOTE

Seal cavity pressure relief is accomplished using two plugs (P) in the back side of the housing. Removal of the plugs is not required unless the direction of pump rotation is to be changed.

If pump rotation is to be changed, remove the socket head pipe plugs (P) from the housing. The hole adjacent to the discharge port will have a small pipe plug under the larger, outer pipe plug. This plug must be removed and reinstalled under the larger, outer pipe plug on the hole adjacent to the discharge port in order to change pump rotation.

PUMP REASSEMBLY

CAUTION

Use caution when handling the idler (02A)

and the rotor shaft assembly (03A). These parts have sharp edges which will grow sharper with use.

Cleaning and Inspection

WARNING!

Most cleaning solvents are toxic and flammable. Use them only in a well ventilated area free from flame, sparks, and excessive heat. Read and follow all precautions printed on solvent containers.

Clean and inspect the pump parts (except the seal assembly) with a cloth soaked in fresh cleaning solvent. Inspect all parts for excessive wear or for any nicks or burrs. Remove nicks or burrs using emery cloth or a fine file. Replace any parts that are badly worn or damaged.

Clean and inspect the seal assembly as indicated in the appropriate section of the **Seal Appendix, Section F**.

Bushing Preparation

When replacing bushings, lightly oil the O.D. of the replacement bushing before installation.

CAUTION

Be very careful when installing graphite bushings. Graphite is extremely brittle and will crack if improperly installed. Use a press to install the bushing with one continuous motion until the bushing is fully seated. Stopping in mid-stroke will cause the bushing to crack. After installation, check the bushing for cracks.

NOTE

*When installing **high temperature graphite bushings**, heat the part that receives the bushing to 500°F and place the bushing in a freezer for at least one hour. This will allow easy installation without breakage and provide a tight shrink fit after cooling.*

Housing Assembly (04)

Clean and inspect the housing (04A) with a cloth soaked in fresh cleaning solvent. Replace it if badly worn or damaged.

WARNING!

Most cleaning solvents are toxic and flammable. Use them only in a well ventilated area free from flame, sparks, and excessive heat. Read and follow all precautions printed on solvent containers.

When installing a replacement bushing (04B), position the housing on the bed of an arbor (or hydraulic) press with the drive end facing up. Press the bushing into the housing until fully seated against the bore shoulder.

CAUTION

If the housing plugs (P) were removed in order to change the direction of pump rotation, the smaller diameter plug **must** be installed in the hole adjacent to the discharge port of the housing. Otherwise, over-pressurization of the seal cavity could result in premature seal failure.

If the socket head pipe plugs (P) in the back side of the housing were removed, install the smaller diameter plug in the hole adjacent to the discharge port, and install one of the larger diameter pipe plugs over the smaller one. Install the second large pipe plug in the other hole in the back of the housing adjacent to the suction port.

Rotor/Shaft Assembly (03A)

Inspect the rotor/shaft assembly (03A) for excessive wear, scoring or scratches along the shaft sealing surface. If replacement is required, the shaft and rotor must be replaced as an assembly. Small scratches can be dressed with a fine file or emery cloth. Replace the rotor/shaft assembly or any other parts if wear or damage is extensive.

NOTE

Part or all of the seal assembly (5) must be installed

*on the rotor/shaft assembly before installing the assembly. Check the **Parts List** furnished with your pump to identify the seal, refer to **Seal Appendix, Section F** for seal installation, then proceed as follows.*

Carefully slide the rotor/shaft assembly and seal into the housing and backhead. **Use caution** not to scratch the I.D. of the bushing (04B).

Head/Idler Kit (01 and 02)

(Figures E-1 and E-2)

If the idler pin (01AB) was removed, apply "Loctite PST No. 565" pipe sealant with teflon (or equivalent compound) to the O.D. of the replacement idler pin and the I.D. of the idler pin bore in the head (01AA). Position the pin in the head with the chamfered side toward the head and the milled flat side facing the crescent. (If the pin is stepped, position it with the large chamfered end toward the head.) Use an arbor (or hydraulic) press to press the pin into the head until it bottoms out.

NOTE

When properly installed, the pin will be positioned 0.010 inch below the surface of the crescent.

Lightly oil the I.D. of the idler (02A), and use an arbor (or hydraulic) press to install the idler bushing (02B) in the idler. The bushing should be centered at both ends of the idler.

Place the head (01A) on a flat surface. Lightly oil the idler bushing (02B) and pin (01AB); install the idler assembly (02) on the pin. Spin the idler to make certain that it moves freely on the pin.

See **SETTING END CLEARANCE** and calculate the number and thickness of gaskets (01B) required for your application and hydraulic pump size. Position the gasket(s) against the head, and slide the head into the housing assembly. Rotate the head assembly (01A) until the groove in the head matches the groove in the housing. Secure the head to the housing with the capscrews (B).

Coverplate Kit (11)

(Figures E-1 and E-2)

The coverplate kit may be mounted on either the head assembly or the housing assembly. Installation is the same for either.

Lightly lubricate the O-rings (10C) with oil and install it in the housing (04A). Secure the coverplate (11AA) with the hardware (BD). Be sure that the warning plate (11AC) is attached to the coverplate (11AA).

Seal Installation (05)

The seal assembly (05) is available in a variety of configurations. Check the **Parts List** furnished with your pump to identify the seal, then refer to **Seal Appendix, Section F**, for installation of the seal and related components.

Backhead Kit (06)

(Figures E-1 and E-3)

NOTE

*Part or all of the seal assembly (5) must be installed before installing the backhead. If your pump is fitted with an optional backhead adaptor, the seal parts must be installed in the adaptor. Check the **Parts List** furnished with your pump to identify the seal, refer to **Seal Appendix, Section F** for installation of the seal and related components, then proceed as follows.*

If removed, install the backhead pin (S) in the backhead (06A) until it bottoms out. Install a new gasket (06B) on the backhead (06A).

Apply a small amount of "Parker-O-Lube" lubricant or equivalent compound on the light metallic side of the thrust washer (06E) to hold it in place. Install the thrust washer over the backhead pin with the dark Teflon™ side facing out. Remove any excess lubricant.

Carefully position the backhead assembly against the housing with the drain slot in the backhead toward the bottom of the pump. Secure the backhead assembly to the housing with the capscrews (B).

If the pump is fitted with a backhead adaptor, install the gasket (06K) and carefully position the adaptor (06L) against the backhead. Secure the adaptor to the backhead with the previously removed capscrews.

SETTING END CLEARANCE

(Figures E-1 and E-3)

The end clearance between the head (01AA) and the face of the rotor (03A) should be checked and adjusted as required as part of a regular preventive maintenance schedule, when performance drops or the pump is disassembled.

NOTE

*The end clearance is established **without** the head gasket set (01B) in place.*

Slide the head assembly into the housing assembly. Rotate the head (01AA) until the groove in the head matches the groove in the housing. Secure the head to the housing with the capscrews (B). The head **must** be drawn completely tight against the housing to establish the correct end clearance.

Use a feeler gauge to measure the clearance between the front of the housing assembly and the back of the head as shown in Figure E-3.

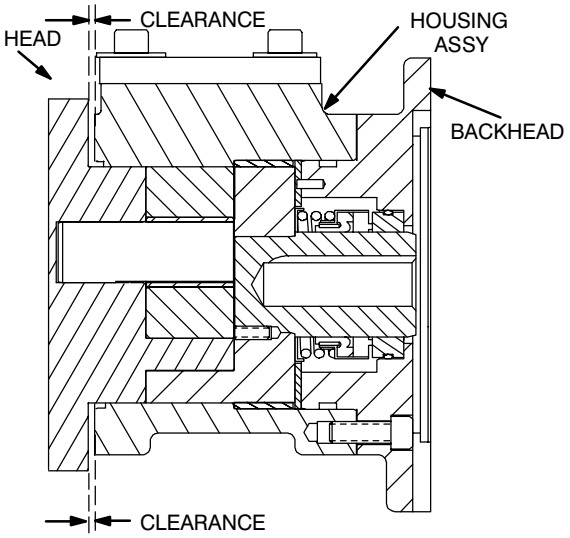

Figure E-3. End Clearance Adjustment

See Table E−1 to determine the gasket(s) (01B) required for your rotor trim. Remove the head from the housing assembly and install the gasket(s). Reinstall the head on the housing assembly (04) and secure with the capscrews (B).

NOTE

The gasket set (01B) includes (2) 0.006 inch gaskets and (2) 0.015 inch gasketS and will accommodate all standard clearances. If additional clearance is required, order two kits.

Feeler Gauge Reading	Std & 35B Rotor Trims	35C & 35E Rotor Trims	35D Rotor Trim
0.000−0.002	(2) 0.006	(3) 0.006	(1) 0.006
0.003−0.006	(3) 0.006	(1) 0.006	(1) 0.015 (2) 0.006
0.007−0.010	(1) 0.006 (1) 0.015	(1) 0.015 (2) 0.006	(1) 0.015 (2) 0.006
0.011−0.014	(2) 0.006 (1) 0.015	(3) 0.006 (1) 0.015	(1) 0.006 (1) 0.006
0.015−0.018	(3) 0.006 (1) 0.015	(1) 0.006	(2) 0.006 (2) 0.015
0.019−0.023	(1) 0.006 (2) 0.015	(2) 0.006 (2) 0.015	(3) 0.006 (2) 0.015

Notes:
Gasket Quantities Shown in Parenghesis.
Consult Pump Parts List For Rotor Trim Code.
For Rotor Trim Codes Not Listed or for Special Applications, Consult Your Local Gorman-Rupp Distributor or the Factory.

Table E-1. End Clearance Gaskets

RELIEF VALVE DISASSEMBLY

(Figure E-4)

NOTE

If the relief valve is low pressure, it will have one internal spring (10AE). If the relief valve is high pressure, it will have two internal springs (10AE and 10AF).

Unscrew the cap (10AN) from the bonnet (10AK) and remove the gasket (10AP). Back off the adjustment capscrew (10AM) to relieve pressure on the spring(s) (10AE and/or 10AF).

Unscrew the bonnet from the valve body (10AA). Remove the valve (10AD) and spring(s) (10AE and/or 10AF). The spring guide (10AH) is an O-ring fit in the bonnet. Remove and discard the O-rings.

If the warning plate (10AB) must be replaced, remove the drive screws (BM), and remove the plate.

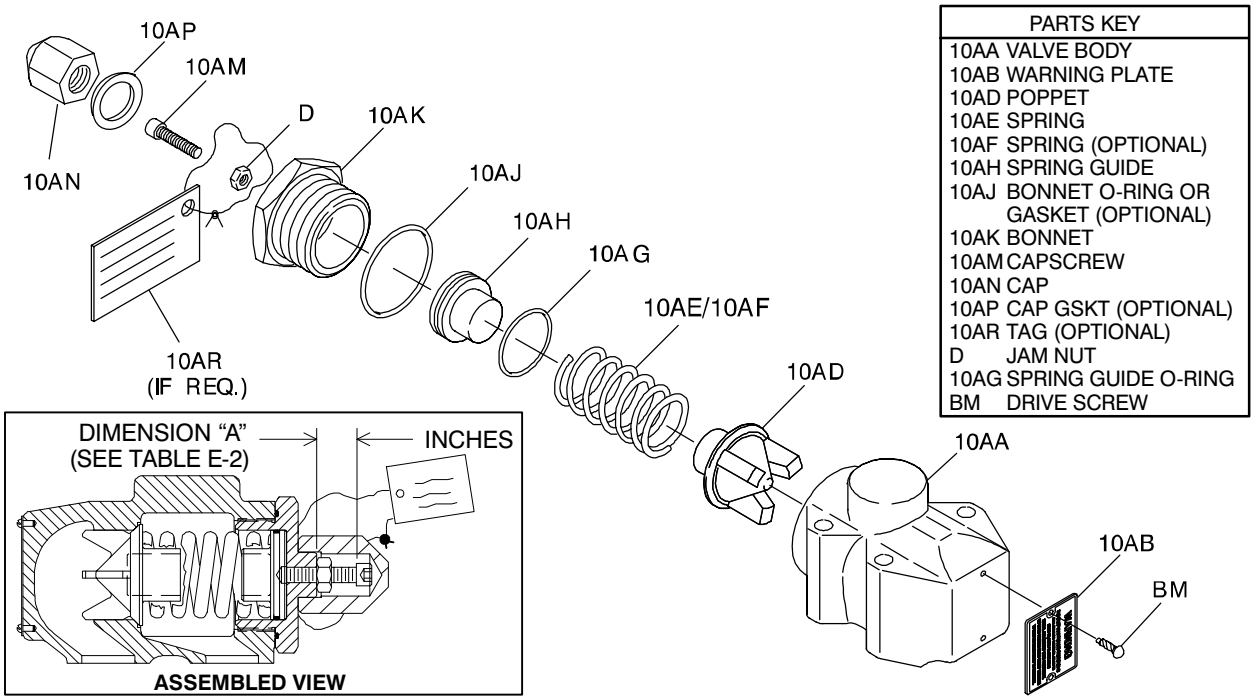

Figure E-4. Pressure Relief Valve Assembly

RELIEF VALVE REASSEMBLY

(Figure E-4)

WARNING!

Do not return the pump to service without the warning plate (10AB) installed. Failure to observe the warning on the plate could result in destruction of the pump, and injury or death to personnel.

Inspect the components for wear, grooves, or other damage that might cause leakage. If any components are worn, replace the defective parts.

If removed, attach the warning plate (10AB) to the valve body (10AA) using the drive screws (BM).

If used, lightly oil the O-ring (10AJ) and install it in the groove on the bonnet (10AK).

Lightly oil the O-ring (10AG) and install it in the groove on the spring guide (10AH). Start the large end of the spring guide into the bonnet (10AK), and push the guide in until it bottoms out.

Insert the valve (10AD), finned end first, into the valve body (10AA). Install the spring(s) (10AE and/or 10AF). Make certain that the spring (10AE) fits **over** the spring guide (10AH), and the optional spring (10AF) fits **into** the guide, and thread the bonnet into the valve body.

Install the jam nut (D) on the adjustment capscrew (10AM), and thread the capscrew into the bonnet until the desired height "A" is reached. See Table E−2 and adjust the capscrew (10AM) to the proper "A" dimension for desired cracking pressure.

WARNING!

Never operate the pump without the adjusting screw jam nut in place. Otherwise, the relief valve spring(s) can be compressed too far for the valve to open. If the valve does not open, excessive pressure can develop, causing damage to the pump and possible injury to personnel.

Refer to the separate Parts List accompanying your pump, and determine the specific hydraulic size (D, G, etc.).

PUMP HYDRAULIC SIZE	SINGLE SPRING OPTION CODE	APPROX. CRACKING PRESSURE (PSI)	"A" DIMENSION (FIGURE E−5)	DOUBLE SPRING OPTION CODE	APPROX. CRACKING PRESSURE (PSI)	"A" DIMENSION (FIGURE E−5)
DC, DE GC, GF GH, GJ	STD			25A		
		50 MIN.	.60 FULLY OUT		100	.60 FULLY OUT
	25D	75 ✳	.47	25E	125	.51
		100	.33		150 ✳	.42
	25G	130 MAX.	.16 SCREW FULLY IN	25H	175	.33
					200	.23
					225	.16 SCREW FULLY IN

Table E-2. Cracking (Valve Opening) Settings (✳ Denotes Factory Setting)

After adjustment, tighten the jam nut (D) flush against the bonnet.

Place the optional warning tag (10AR) between the bonnet and the cap (10AN). Install the cap, and tighten until fully seated against the bonnet.

Relief Valve (10) Installation

Lubricate and install the O-ring(s) (10C) on the housing assembly (04A) or the head assembly (01A). Secure the relief valve (10A) with the capscrews (B).

WARNING!

Do not return the pump to service without the warning plate (10AB) installed. Failure to observe the warning on the plate could result in destruction of the pump, and injury or death to personnel.

If the warning plate (10AB) has been removed, secure it with the drive screws (BM).

SEAL APPENDIX — SECTION F

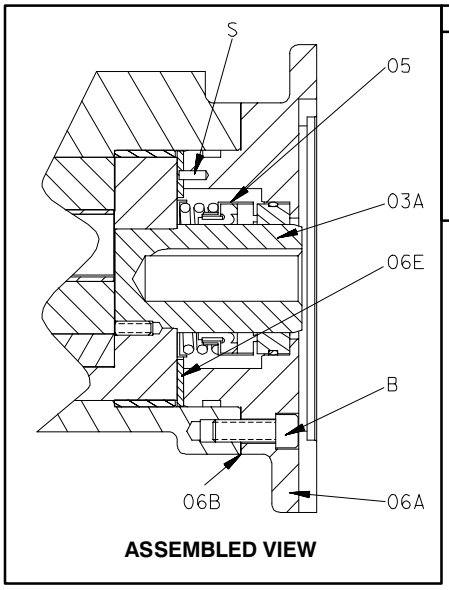

PARTS KEY	
03A	ROTOR/SHAFT ASSY
05	SEAL ASSEMBLY
06A	BACKHEAD ASSY
06B	GASKET
B	SOCK HD CAPSCREW
06E	THRUST WASHER
S	BACKHEAD PIN

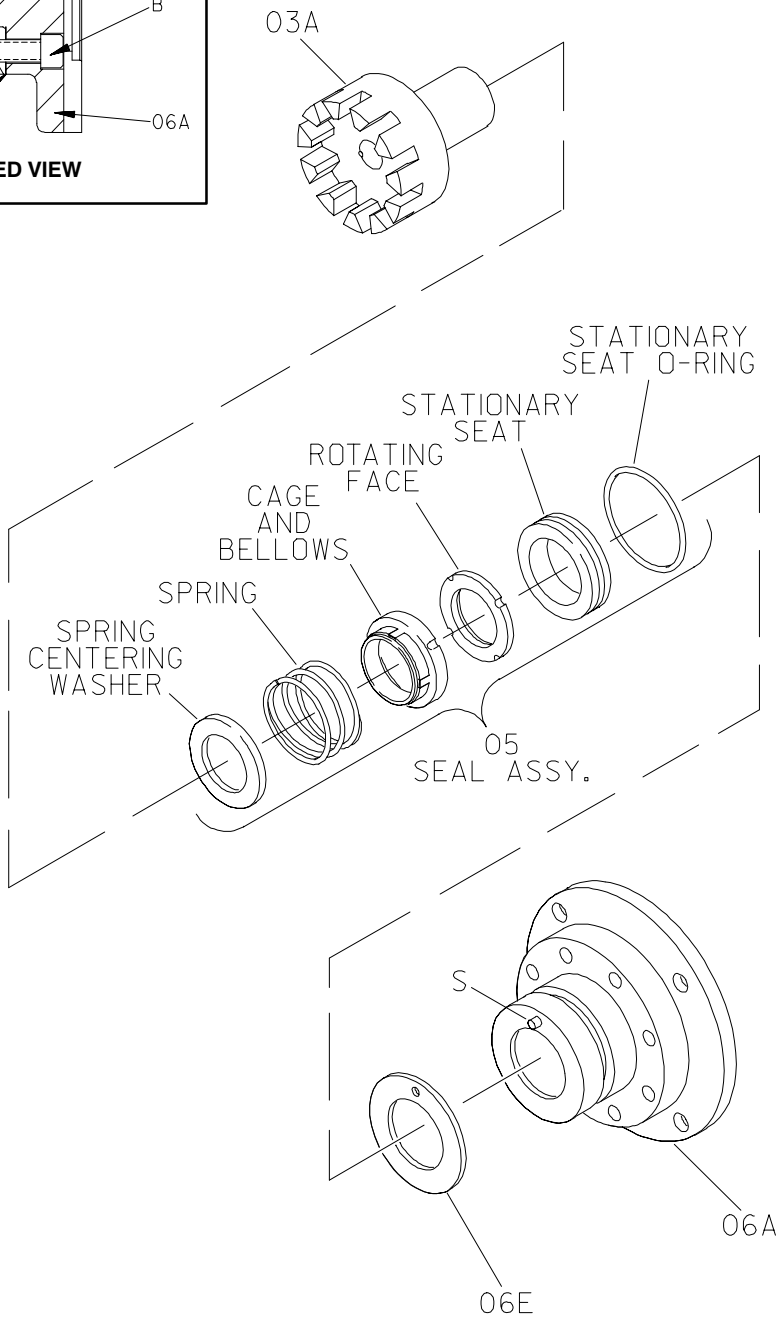

Figure F-1. Standard Type 21 And Optional 60A And 61J Mechanical Seals

Seal Removal

(Figures E-1 and F-1)

See **PUMP DISASSEMBLY** and disassemble the pump up to and including the **Backhead Kit (06)**. As the backhead is removed from the the housing (04), the stationary element will remain inside the backhead. Remove the seal stationary element and O-ring from the backhead (06A).

With the head kit (01), idler assembly (02), and backhead kit (06) removed, push the rotor/shaft assembly (03A) toward the head end of the pump and remove it from the housing.

Lightly oil the shaft and remove the rotating portion of the seal from the rotor/shaft assembly.

Continue as required with **PUMP DISASSEMBLY**.

Seal Installation

(Figures E-1 and F-1)

See **PUMP REASSEMBLY**, and reassemble the pump up to the backhead kit (06).

Clean the seal cavity and shaft with a cloth soaked in fresh cleaning solvent.

WARNING!

Most cleaning solvents are toxic and flammable. Use them only in a well ventilated area free from flame, sparks, and excessive heat. Read and follow all precautions printed on solvent containers.

The seal is not normally reused because wear patterns on the finished faces cannot be realigned during reassembly. This could result in premature failure. If necessary to reuse an old seal in an emergency, **carefully** wash all metallic parts in fresh cleaning solvent and allow to dry thoroughly.

CAUTION

Seal components **must** be kept clean. Handle seal parts with extreme caution to prevent damage. Use care not to contaminate the precision-finished faces; even fingerprints on the faces can shorten seal life. If necessary to clean the faces, use a clean cloth and wipe in a circular pattern.

Inspect the seal components for wear, scoring, grooves, and other damage that might cause leakage. If any components are worn, replace the complete seal; **never mix old and new seal parts**.

If a replacement seal is being used, unwrap the mechanical seal components. Check that the seal faces are clean, undamaged and free if any foreign matter. Set aside and cover the seal stationary element and O-ring; they will not be used until the backhead kit (06) is installed.

Lubricate the stationary element O-ring and install it in the groove in the backhead.

Position the stationary element in the backhead (06) with the sealing face up. Cover the sealing face with a clean tissue and use thumb pressure to press the stationary element into the backhead until fully seated.

Install the backhead as described in **Pump Reassembly, Section E**

Lightly oil the shaft of the rotor/shaft assembly (03A). Slide the spring centering washer and spring onto the shaft until fully seated against the back of the rotor. Position the rotating portion of the seal on the shaft with the sealing face toward the drive end of the shaft. Place a clean tissue over the sealing face of this rotating subassembly and slide it onto the shaft until the seal retainer seats squarely against the spring.

Slide the assembled rotor/shaft and rotating portion of the seal into the housing until fully seated.

Proceed with **Pump Reassembly, Section E**.

SEAL APPENDIX – SECTION F

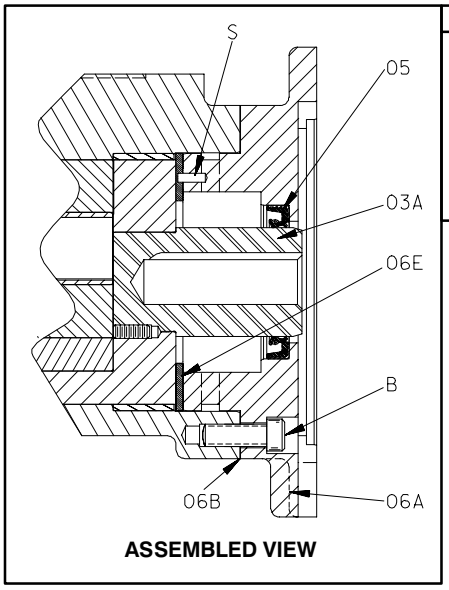

PARTS KEY	
03A	ROTOR/SHAFT ASSY
05	LIP SEAL
06A	BACKHEAD ASSY
06B	GASKET
B	SOCK HD CAPSCREW
06E	THRUST WASHER
S	BACKHEAD PIN

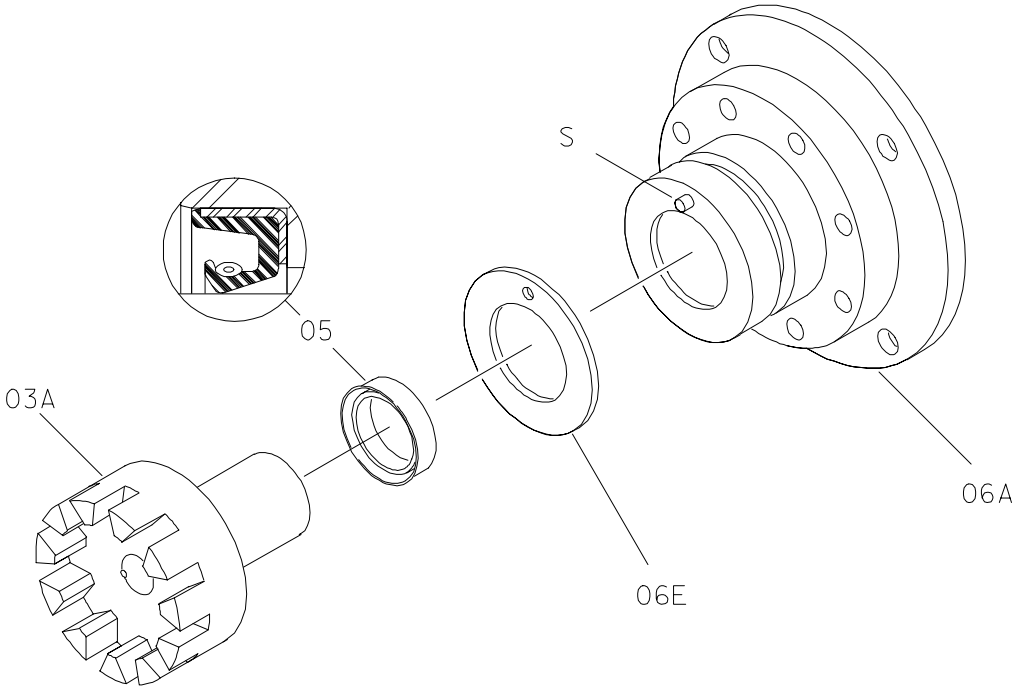

16707

Figure F-2. Standard Lip (And Optional 65A And 65C) Seal

Seal Removal

(Figures E-1 and F-2)

See **PUMP DISASSEMBLY** and disassemble the pump up to and including the **Backhead Kit (06)**. Remove the backhead from the housing (04). The lip seal will remain inside the backhead. Press or pry the lip seal out of the backhead (06A).

Continue as required with **PUMP DISASSEMBLY**.

Seal Installation

(Figures E-1 and F-2)

See **PUMP REASSEMBLY**, and reassemble the pump up to the backhead kit (06).

Clean the seal cavity and shaft with a cloth soaked in fresh cleaning solvent.

WARNING!

Most cleaning solvents are toxic and flammable. Use them only in a well ventilated area free from flame, sparks, and excessive heat. Read and follow all precautions printed on solvent containers.

Position the backhead on the bed of an arbor (or hydraulic) press with the drive end down. Lubricate the lip seal with grease and press it into the backhead bore with the lip positioned as shown in Figure F-2 until fully seated.

Proceed with **Pump Reassembly, Section E**.

BACKHEAD ADAPTOR APPENDIX — SECTION G

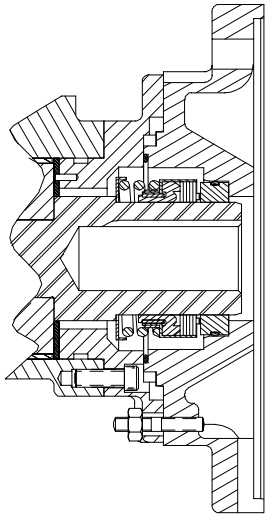

ASSEMBLED VIEW

PARTS KEY	
05	SEAL ASSY
06A	BACKHEAD
06G	O-RING
06L	BACKHEAD ADAPTOR
B	SOC HD CAPSCREW
C	STUD
D	HEX NUT

NOTE: Refer to **O-Ring Appendix, Section H** for O-ring identification.

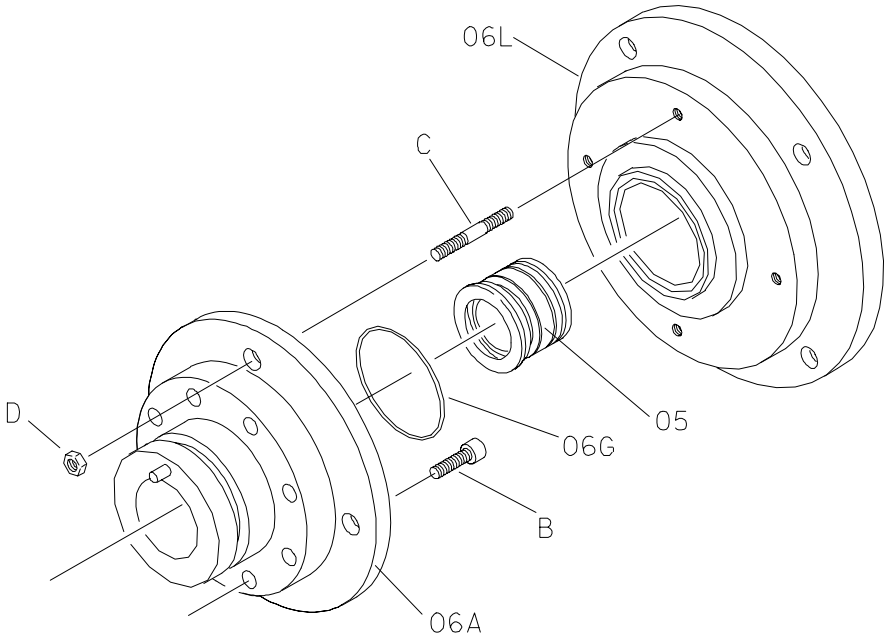

16712

Figure G-1. Backhead Adaptor

Backhead Adaptor Removal

(Figure G-1)

Before attempting to service the pump, shut down the motor and take precautions to ensure that it will remain inoperative.

Close all valves in the suction and discharge lines. Disconnect the suction and discharge hose/piping.

Remove the hardware (not shown) securing the backhead adaptor (06L) to the motor and separate the pump from the motor.

Remove the nuts (D) and separate the backhead adaptor from the pump. Remove the O-ring (06G). Press the stationary seat (or lip seal) out of the backhead adaptor from the back side.

Remove and discard the O-ring (06G).

Continue as required with **PUMP DISASSEMBLY**.

Backhead Adaptor Installation

(Figure G-1)

See **PUMP REASSEMBLY** and reassemble the pump up to and including the rotating portion of the seal.

If your pump is equipped with a mechanical seal, press the stationary seal seat and O-ring into the backhead adaptor (06L). Use caution not to damage the seal face.

If your pump is equipped with a lip seal, press the lip seal into the backhead adaptor with the lip positioned as shown in Figure F-2.

Install a new O-ring (06G) in the groove in the backhead adaptor.

Position the backhead adaptor over the rotor/shaft so the seal faces contact (or the lip seal seats over the rotor shaft) and the studs (C) align with the holes in the backhead (06A). Secure the backhead adaptor to the backhead by tightening the nuts (D) in an alternating pattern.

Continue as required with **PUMP REASSEMBLY**.

O-RING APPENDIX — SECTION H

Ref. No.	Description	Hyd. Size	Dash No.
01C	Head to Housing	D G	144 152
06G	Backhead to Adaptor	D G	156 153
06AR	Seat Sleeve to Bushing Sleeve	D G J N R S T	135 143 235 235 152 246 255
07B	Seat Sleeve to Backhead	D G	133 145
10AG	Spring Guide to Bonnet	D G	028 028
10AJ	Bonnet to Valve Body	D G	033 033
10C	Valve or Coverplate to Head	D G	021 029

O-RING FAMILY NUMBERS

5-DIGIT FAMILY	O-RING MATERIAL
25151—***	NEOPRENE®
25152—***	BUNA-N
25154—***	VITON®
25156—***	KALREZ®
25157—***	TEFLON®-ENCAPSULATED
25158—***	CHEMRAZ® (OR EQUAL)

*** This number refers to the standard size.

NOTE: Neoprene, Kalrez, Teflon and Viton are Registered Trademarks of the DuPont Corp.
Chemraz is a Registered Trademark of Green, Tweed and Co.
Equivalent material may be substituted for all materials.

Table G-1. O-Ring Information Chart

For U.S. and International Warranty Information,
Please Visit www.grpumps.com/warranty
or call:
U.S.: 419—755—1280
International: +1—419—755—1352

For Canadian Warranty Information,
Please Visit www.grcanada.com/warranty
or call:
519—631—2870

THE GORMAN-RUPP COMPANY ● MANSFIELD, OHIO
GORMAN-RUPP OF CANADA LIMITED ● ST. THOMAS, ONTARIO, CANADA

Steel & Stainless Steel Drums

Steel Drums

Open Head with Nut-and-Bolt Closing Ring and No Bung Openings

Closed Head

Our multipurpose drums have a black enamel finish. The lids, where applicable, are white.

Cap., gal.	Top OD	Outside Ht.	Gauge, Top/Body/ Bottom/Ring	Specifications Met	
Open-Head Drums with Rust-Inhibitor Coating, Lid, and EPDM Gasket					
With Nut-and-Bolt Closing Ring—*No Bung Openings*					
55	22½″	34″	18/20/20/12	UN1A2/Y425/S; UN1A2/Y1.2/100	**4115T68**
55	22½″	34″	16/16/16/12	UN1A2/X400/S; UN1A2/Y1.5/150	**4115T13**
55	22½″	34″	16/16/16/12	UN1A2/X430/S; UN1A2/Y1.6/200	**4115T11**
30	19¼″	28½″	18/18/18/12	UN1A2/X235/S; UN1A2/Y1.5/150	**4115T[illegible]**
20	19¼″	21½″	18/18/18/12	UN1A2/X220/S; UN1A2/Y1.5/150	**4115T51**
16	14¾″	28″	20/20/20/13	UN1A2/X200/S; UN1A2/Y1.5/150	**4115T83**
10	14¾″	18″	20/20/20/13	UN1A2/X120/S; UN1A2/Y1.8/150	**4115T12**
With Nut-and-Bolt Closing Ring—*2″ and ¾″ NPT Bung Openings with Plugs*					
55	22½″	34″	18/20/20/12	UN1A2/Y425/S; UN1A2/Y1.2/100	**4115T18**
30	19¼″	28½″	18/18/18/12	UN1A2/X235/S; UN1A2/Y1.5/150	**4115T22**
With Nut-and-Bolt Closing Ring—*2″ and ¾″ NPT Bung Openings with Plugs on Top; 2″ NPT Bung Opening with Plug 4″ from the Bottom*					
55	22½″	34″	18/20/20/12	UN1A2/Y425/S; UN1A2/Y1.2/100	**4115T24**
With Lever-Lock Closing Ring—*No Bung Openings*					
55	22½″	34″	18/20/20/12	UN1A2/Y425/S; UN1A2/Y1.2/100	**4115T28**
30	19¼″	28½″	18/18/18/12	UN1A2/X235/S; UN1A2/Y1.4/150	**4115T29**
20	19¼″	21½″	18/18/18/12	UN1A2/X220/S; UN1A2/Y1.5/150	**4115T34**
16	14¾″	28″	18/20/20/13	UN1A2/Y200/S; UN1A2/Y1.5/150	**4115T39**
10	14¾″	18″	18/20/20/13	UN1A2/X120/S; UN1A2/Y1.8/150	**4115T43**
With Lever-Lock Closing Ring—*2″ and ¾″ NPT Bung Openings with Plugs*					
55	22½″	34″	18/20/20/12	UN1A2/Y425/S; UN1A2/Y1.2/100	**4115T44**
30	19¼″	28½″	18/18/18/12	UN1A2/X235/S; UN1A2/Y1.4/150	**4115T45**
Open-Head Drums with Epoxy Phenolic Coating, Lid, and EPDM Gasket					
With Nut-and-Bolt Closing Ring—*2″ and ¾″ NPT Bung Openings with Plugs*					
55	22½″	34″	18/20/20/12	UN1A2/Y425/S; UN1A2/Y1.2/100	**4115T49**
30	19¼″	28½″	18/18/18/12	UN1A2/X235/S; UN1A2/Y1.5/150	**4115T53**
With Lever-Lock Closing Ring—*No Bung Openings*					
55	22½″	34″	18/20/20/12	UN1A2/Y425/S; UN1A2/Y1.2/100	**4115T54**
30	19¼″	28½″	18/18/18/12	UN1A2/X235/S; UN1A2/Y1.4/150	**4115T55**
Closed-Head Drums with Rust-Inhibitor Coating—2″ and ¾″ NPT Bung Openings with Plugs					
55	22½″	34″	18/20/18/__	UN1A1/X1.6/300	**4115T38**
55	22½″	34″	16/16/16/__	UN1A1/X1.8/300	**4115T59**
30	19¼″	28½″	16/20/16/__	UN1A1/X1.2/300	**4115T62**
20	19¼″	21½″	16/20/16/__	UN1A1/X1.2/300	**4115T52**
16	14¾″	28″	20/20/20/__	UN1A1/X1.4/250	**4115T63**
10	14¾″	18″	20/20/20/__	UN1A1/X1.4/250	**4115T64**
Closed-Head Drums with Epoxy Phenolic Lining—2″ and ¾″ NPT Bung Openings with Plugs					
55	22½″	34″	16/16/16/__	UN1A1/X1.8/300	**4115T60**
30	19¼″	28½″	16/20/16/__	UN1A1/X1.2/300	**4115T67**

EAGLE

Made In U.S.A.

No. 5PW04
20-Gallon Lab Pack

No. 5PW10
95-Gallon Overpack Drum

No. 4RF59
30-Gallon
Salvage Drum

No. 4RF60
Drum Tray

No. 5U734
Drip Pan

No. 4RF61
Drum Tray Dolly

Lab Packs, Overpacks, and Salvage Drums

Blow-molded 100% high-density polyethylene containers with UV inhibitors are chemically resistant to most materials. Super strong, safety yellow color plastic won't dent, rust, or crack.

- Can be used with packing groups I, II, and III of hazardous materials

LAB PACKS/OVERPACKS

Lightweight, nestable lab packs and overpacks can be used for storage, transportation, clean-up, and spill containment. Features screw top lid for secure closure.

- Lab packs incinerate completely
- Lab Packs meet DOT 49 CFR 173.12 [1992]
- Overpacks meet requirements of DOT 49 CFR 173.25 [1992]

20-Gallon Lab Pack

Lab pack stores 5-gallon pails or smaller containers easily. Handles are for forklift use.

30-Gallon Lab Pack

Stackable lab pack can be used as a shipping container, lab pack, or spill kit container.

Overpacks

65-gallon and 95-gallon overpacks include handles, which are suitable for forklift use.

SALVAGE DRUMS

Nestable drums provide safe secondary containment for storage, transport, and cleanup. Removable poly head and metal band seal securely. No. 4RF63 features handles suitable for forklift use.

- Meet 3 psi pressure test
- Meet DOT 49 CFR173.3(c)

DRUM ACCESSORIES

Drum Tray

Ideal under 5- to 55-gallon containers during dispensing or filling. All polyethylene construction provides excellent chemical resistance. Reservoir with raised supports keeps container away from spills.

Drip Pan

Absorbs problem leaks and helps keep work area floors clean and safe. Holds up to one gallon of liquid. Safety yellow polyethylene pan is filled with polypropylene sorbent for oils, water-based and other nonaggressive liquids. Rigid and sturdy to help prevent spillage during handling. Packed 12 pans per box.

Metal Drum Tray Dolly

Use with No. 4RF60 drum tray (listed above). Welded construction, rubber wheels.

UN Certification	Capacity (Gals.)	Dimensions (In.) O.D.	I.D.	H	Eagle Model	Stock No.		Shpg. Wt.
LAB PACKS								
1H2/X57/S	20	20½	18	21¼	1650	5PW04		13.0
[illegible]	[illegible]	[illegible]	[illegible]	[illegible]	[illegible]	[illegible]		[illegible]
OVERPACKS								
1H2/X300/S	65	31	27	33½	1661	6YG06		49.0
[illegible]	[illegible]	[illegible]	[illegible]	[illegible]	[illegible]	[illegible]		[illegible]
SALVAGE DRUMS								
1H2/X75/S	20	22	21½	20½	1654	4RF63		15.0
1H2/X100/S	30	21⅛	20½	28½	1602	4RF59		15.0
1H2/X200/S	65	31	27	39	1665	3KN31		53.0
1H2/X340/S	95	31	27	44½	1695	3KN34		58.0
DRUM ACCESSORIES								
Drum Tray	—	31	26	6	1614	4RF60		18.6
Drip Pan (Pack of 12)	—	10½	10½	3	1670	5U734		10.0
Metal Drum Tray Dolly	—	31	31	7	1618	4RF61		70.5

Tank Flame Arrester

This flame arrester mounts at the end of your vent pipe, letting volatile vapors escape to the atmosphere. If the vapors ignite, the arrester prevents flames from flashing back down the pipe. It also has fusible links that melt at 165°F to drop the weather shield. It has a red iron cover and base and aluminum weathershield. Connection is 2″ NPT female. UL listed.

1206K81.

Section 4 - Filter Systems

- Krystil Klear Model 88 Bag Filter Vessel Specifications
- Krystil Klear Model 88 Bag Filter Installation & Maintenance Instructions
- Krystil Klear Bag Specifications
- Tetrasolv Model AF-500 Liquid Phase Carbon Filter Specifications
- Tetrasolv Series AF Liquid Phase Carbon Filter Operation & Maintenance Manual
- Tetrasolv Model VR-400 Vapor Phase Carbon Filter Specifications
- Tetrasolv Model VFD-30 Vapor Phase Carbon Filter Specifications
- Tetrasolv Series VR Vapor Phase Carbon Filter Operation & Maintenance Manual

Krystil Klear Filtration®

The one-stop source for all your industrial liquid filtration needs!

Standard Duty Product Navigation

- **Liquid Bag**
  - Model 44 Single Liquid Bag Housing
  - Model 66 Single Liquid Bag Housing
  - Model 88 Single Liquid Bag Housing
  - *Model 88, 100 PSI Liquid Bag Housing*
  - Model T88, 150 PSI Liquid Bag Housing
  - OEM, 100 PSI Liquid Bag Housing
  - Multi-Round Liquid Bag Housing
  - Duplex Liquid Flow Housings
  - Diversa-Flow Liquid Bag Housings
  - Model 882 Twin Capacity Liquid Bag Housing
  - Strainer Baskets
  - Liquid Filter Bags
- + Liquid Cartridge
- + Inline Strainer
- + Fuel/Hydraulic

Model 88, 100 PSI Liquid Bag Housing

Features and Options	Vessel Construction	Specifications
Build a Part Number	Schematics and Dimensions	

Krystil Klear's 100 PSI Liquid Bag Housing offers a quality vessel for lower pressure applications. Our 100 PSI vessel has a flat base and includes all of the favorable features of our standard 150 PSI vessel.

Contact a Sales Representative About this Product

FEATURES

- **Carbon or 304 stainles steel construction**
- **100 PSI pressure rating**
- **Low pressure drop**
- **Quick swing closure with eye nuts**
- **Buna seals - lid & basket**
- **Differential, drain, and vent ports**
- **Adjustable support legs**
- **304 stainless steel strainer basket**
- **2-inch female NPT connection**

Our 100 PSI vessel effectively removes dirt, pipe scale, and other contaminants from process liquids such as water, chemical, and petroleum products. Quality construction and design assure protection for all down-stream equipment.

Krystil Klear Filtration®

The one-stop source for all your industrial liquid filtration needs!

Standard Duty Product Navigation

- **Liquid Bag**
  - Model 44 Single Liquid Bag Housing
  - Model 66 Single Liquid Bag Housing
  - Model 88 Single Liquid Bag Housing
  - *Model 88, 100 PSI Liquid Bag Housing*
  - Model T88, 150 PSI Liquid Bag Housing
  - OEM, 100 PSI Liquid Bag Housing
  - Multi-Round Liquid Bag Housing
  - Duplex Liquid Flow Housings
  - Diversa-Flow Liquid Bag Housings
  - Model 882 Twin Capacity Liquid Bag Housing
  - Strainer Baskets
  - Liquid Filter Bags
- + Liquid Cartridge
- + Inline Strainer
- + Fuel/Hydraulic

Model 88, 100 PSI Liquid Bag Housing

Features and Options | Vessel Construction | Specifications
Build a Part Number | Schematics and Dimensions

VESSEL CONSTRUCTION

Our model 88, 100 PSI vessel is designed for operating up to 100 PSI at 300 degrees Fahrenheit. The housing design provides a large sump area at the bottom of the basket for dirt and scale accumulation. This design utilizes the filter more efficiently and prolongs the element life.

The **basket** seals onto an o-ring to eliminate particulate bypass between the basket and seat. Optional **mesh-lined strainer baskets** and **o-rings** are available. Please refer to their individual brochures in our liquid catalog.

Contact a Sales Representative About this Product

A **vent** and a **gauge port** in the housing lid and a **drain port** in the housing speed evacuation and filling. Permanently piped housings are opened with simple tools without disturbing the piping. **Swing bolts** with eye-nuts allow easy opening and closing of the swing-lid. No need to remove any hardware.

As a standard finish, all vessels are blast cleaned and painted inside and out with a **2-part epoxy**. Stainless steel vessels are supplied with a satin finish.

Krystil Klear Filtration®

The one-stop source for all your industrial liquid filtration needs!

Standard Duty Product Navigation

- **Liquid Bag**
  - Model 44 Single Liquid Bag Housing
  - Model 66 Single Liquid Bag Housing
  - Model 88 Single Liquid Bag Housing
  - *Model 88, 100 PSI Liquid Bag Housing*
  - Model T88, 150 PSI Liquid Bag Housing
  - OEM, 100 PSI Liquid Bag Housing
  - Multi-Round Liquid Bag Housing
  - Duplex Liquid Flow Housings
  - Diversa-Flow Liquid Bag Housings
  - Model 882 Twin Capacity Liquid Bag Housing
  - Strainer Baskets
  - Liquid Filter Bags
- + Liquid Cartridge
- + Inline Strainer
- + Fuel/Hydraulic

Model 88, 100 PSI Liquid Bag Housing

Features and Options	Vessel Construction	Specifications
Build a Part Number	Schematics and Dimensions	

SPECIFICATIONS

Housing lid has a 3-bolt swing closure with a vent and gauge port. Connections are 2 inch NPT with a side inlet and bottom outlet. Housing is supplied with two differential pressure ports to measure the differential pressure across the filter bag. A two-part epoxy finish is applied on the carbon steel vessels to maximize the life of the housing; stainless steel vessels are supplied with a satin finish. Basket material is manufactured from 304 stainless steel with 9/64" perforations to act as a strainer or to accept a #1 or #2 size liquid bag. Basket seals onto a Viton o-ring in the basket support. Adjustable tripod leg assembly is supplied with housing. Vessels are rated at a 100 pounds per square inch design.

Contact a Sales Representative About this Product

Krystil Klear Products

| Liquid Bag Housings | Liquid Cartridge Housings | Inline Strainer Housings | Fuel / Hydraulic Housings |

© 1998, 2003 Krystil Klear Filtration

Krystil Klear Filtration®

The one-stop source for all your industrial liquid filtration needs!

Standard Duty Product Navigation

- **Liquid Bag**
  - Model 44 Single Liquid Bag Housing
  - Model 66 Single Liquid Bag Housing
  - Model 88 Single Liquid Bag Housing
  - *Model 88, 100 PSI Liquid Bag Housing*
  - Model T88, 150 PSI Liquid Bag Housing
  - OEM, 100 PSI Liquid Bag Housing
  - Multi-Round Liquid Bag Housing
  - Duplex Liquid Flow Housings
  - Diversa-Flow Liquid Bag Housings
  - Model 882 Twin Capacity Liquid Bag Housing
  - Strainer Baskets
  - Liquid Filter Bags
- + Liquid Cartridge
- + Inline Strainer
- + Fuel/Hydraulic

Model 88, 100 PSI Liquid Bag Housing

Features and Options | Vessel Construction | Specifications
Build a Part Number | Schematics and Dimensions

SCHEMATICS & DIMENSIONS

Contact a Sales Representative About this Product

Schematics

Dimensions

	Basket Depth	
	15"	30"
A	30.6	42.1
B	16.0	27.5
C	24.5	36.0
D	21.0	32.6

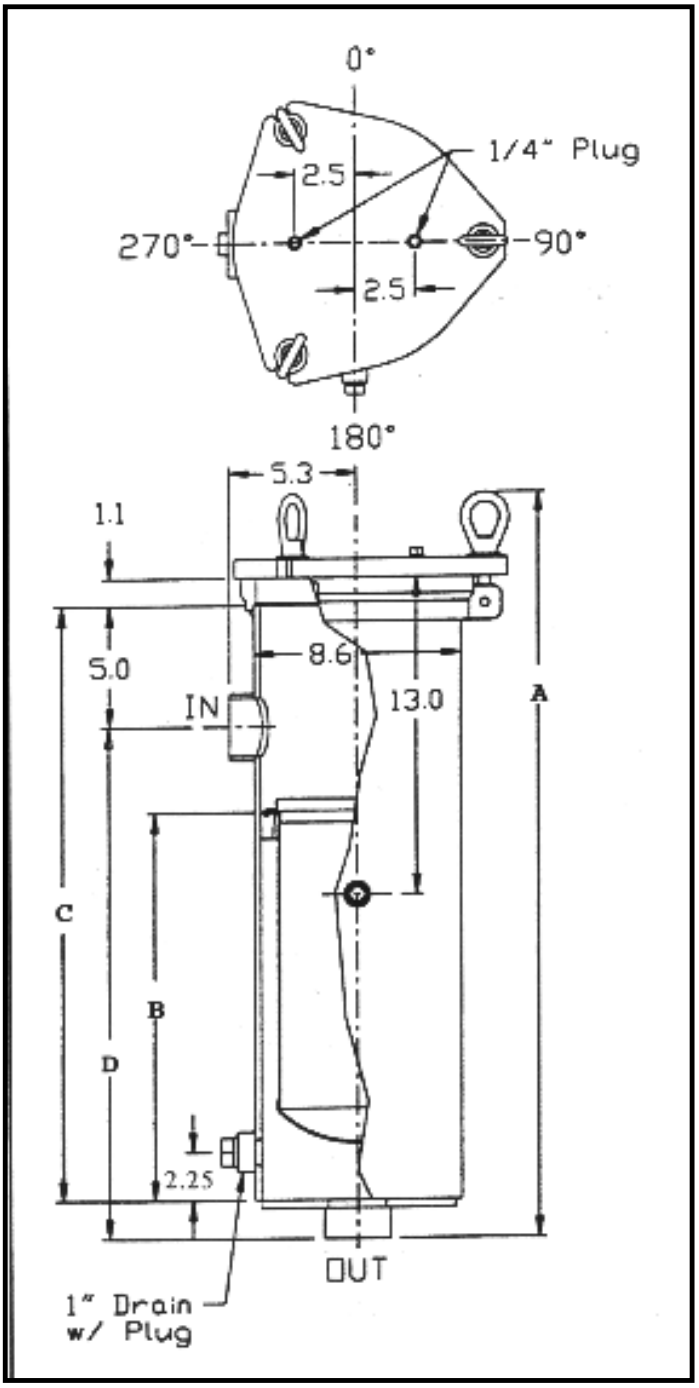

Krystil Klear Products

| Liquid Bag Housings | Liquid Cartridge Housings | Inline Strainer Housings | Fuel / Hydraulic Housings |

© 1998, 2003 Krystil Klear Filtration

PENTAIR INDUSTRIAL	Department: Engineering			Document Number:	
Krystil Klear Winamac	Status:	Rev	0	Issue Date:	11/08/08
Instructions	Written By: L. Junk			Page:	of
Operating Instructions for Liquid Bag Models - L44-66-88					

WARNING-SAFETY INFORMATION

1. The housings in this catalog, if improperly used, can cause serious injury or death
2. Always wear proper protective clothing for the liquid being filtered. Check your M.S.D.S. for any instructions or suggestions.
3. Do not run housing in excess of the rated pressure or temperature found on the housing tank label.
4. Check chemical compatibility of selected o-ring and housing material before housing installation.
5. Do not open housing when the system is under pressure; always relieve all pressure through housing before opening of housing lid.
6. *Stop all flow of liquid before opening of lid.*
7. Bolt housing to floor, as tipping may occur when lid is opened.

MODEL **L44**: maximum of 300 PSI working pressure
maximum flow rate of 50 gallons per minute
MODEL **L66**: maximum of 150 PSI working pressure
maximum flow rate of 100 gallons per minute
MODEL **L88**: maximum of 150 PSI working pressure
maximum flow rate of 220 gallons per minute

RECEIVING INSTRUCTIONS:

1. Unpack the housing(s) and discard any shipping materials
2. Place housing in the desired location on a flat surface, securing support legs to base if applicable.

INSTALLATION INSTRUCTIONS:

*** flow to the housing should be turned off***

1. Place housing on pipe connections
   a. N.P.T./Coupling style – Pentair does not recommend using any type of liquid sealant due to contamination of the pipe that may occur.
   b. Flange style – put a small amount of clean, heavy oil on one side of the gaskets, place oiled side down onto existing flanges to hold gaskets.
2. Please note the labeling of the inlet and outlet connections for proper installation. Tighten housing with proper tension to seal housing onto existing pipe or flange. Note: housing has been factory pressure tested to assure a leak proof vessel. If leaking occurs, check for improper connections.
3. Remove lid from housing by turning 2 eye nuts until loosened and swing them down. Swing the lid out of the way until full view of the inner housing area is gained.
4. Check inner housing and pipe connections for foreign material and discard any items that have entered during shipping or unpacking.
5. Make sure that the strainer baskets are pushed fully into housing grooves. If using a filter bag, seat bag fully into strainer basket to assure a leak-proof seal between bag and basket. For best results, bag should be fully extended into the basket.
6. Close lid and alternately tighten the eye nuts until lid is fully seated onto the O-ring gasket. DO NOT OVERTIGHTEN.
7. Housing is now ready for start-up.

START-UP OF HOUSING

1. Loosen vent plug to allow air to escape from housing.
2. Slowly open the inlet to gradually fill the housing body.
3. When housing body is full (liquid escapes from top vent), close the vent.
4. Open the outlet connection and fully open the inlet connection. Housing is now operating properly.

REMOVAL OF SPENT ELEMENT:

1. When the housing reaches your pre-determined differential pressure, stop flow to the housing and relieve housing pressure through housing drain. Remove enough liquid to show top of basket flange.
2. Loosen eye nuts on housing and swing the lid to gain full access to the inside of housing.
3. If using a liquid bag, pull the bags out and discard per the liquid MSDS or State and Federal regulations for the handling of all items in contact with such liquid.
4. Remove filter baskets and clean thoroughly.
5. Housing debris and sludge should be removed to prolong filter efficiencies.
6. Replace filter baskets and bags into housings as noted in Installation Instructions above.

RECOMMENDED MAINTENANCE:

Periodic checks should be made on all housing lid and basket o-rings to ensure no cuts or damage has incurred that would cause the housing not to seal. If housing parts become damaged or worn, replace immediately.

REPLACEMENT PARTS LISTING

PART NUMBER	DESCRIPTION
*LV	Viton Lid O-ring
88BV	Viton Basket O-ring
*LGCA	18" Tri-pod Leg Assembly Carbon Steel
*LG22	18" Tri-Pod Leg Assembly Stainless Steel
EN	Eye Nut
RE	Rod End
CBA	Clevis Bolt Assembly
*LDCA	Lid Cover Carbon Steel
*LDSS304	Lid Cover Stainless Steel
PER APPLICATION **	Filter Bags
PER APPLICATION **	Filter Basket

* Insert first two digits of housing model # (18,22,24,30,36,42,48)
** Full line of replacement bags and baskets are available

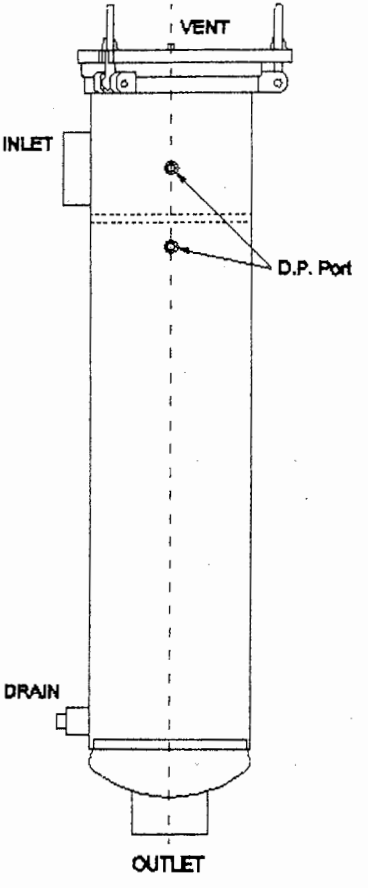

Krystil Klear Filtration®

The one-stop source for all your industrial liquid filtration needs!

Standard Duty Product Navigation

- **Liquid Bag**
  - Model 44 Single Liquid Bag Housing
  - Model 66 Single Liquid Bag Housing
  - Model 88 Single Liquid Bag Housing
  - Model 88, 100 PSI Liquid Bag Housing
  - Model T88, 150 PSI Liquid Bag Housing
  - OEM, 100 PSI Liquid Bag Housing
  - Multi-Round Liquid Bag Housing
  - Duplex Liquid Flow Housings
  - Diversa-Flow Liquid Bag Housings
  - Model 882 Twin Capacity Liquid Bag Housing
  - Strainer Baskets
  - *Liquid Filter Bags*
- + Liquid Cartridge
- + Inline Strainer
- + Fuel/Hydraulic

Liquid Filter Bags

Features and Options | Specifications

Liquid Filter Bag Specifications

Micron Ratings

FIBER	MICRON RATING															TEMPERATURE
	1	5	10	15	25	50	75	100	150	200	250	300	400	600	800	
Felt, Nomex (HT)		X	X	X	X	X		X								300 degrees F
Felt, Polyester (KE)	X	X	X	X	X	X	X	X		X						300 degrees F
Felt, Polypropylene (KO)	X	X	X		X	X		X								225 degrees F
Monofilament, Nylon (NMO)		X	X		X	X	X	X	X	X	X	X	X	X	X	250 degrees F
Monofilament, Polyester (KEMO)		X	X		X	X	X	X	X	X	X	X	X	X	X	250 degrees F
Monofilament, Polypropylene (KOMO)											X	X	X	X	X	225 degrees F
Multifilament, Nylon (NM)									X							250 degrees F
Multifilament, Polyester (KEM) *								X	X	X	X		X	X	X	250 degrees F
Oil Removal (OR)					X											225 degrees F

*** Multifilament Polyester also available in 125, 1000, and 1500 microns.**

Contact a Sales Representative About this Product

BAG SIZES

MODEL NO.	BAG SIZE	LENGTH (inches)	DIAMETER (inches)	SURFACE AREA (sq. ft.)
44-6	#3	8	4.12	.5

44-12	#4	14	4.12	1.0
66-12	#7	15	5.62	1.3
66-18	#8	21	5.62	2.0
66-30	#9	32	5.62	3.4
88-15	#1	16.5	7.06	2.0
	#1 inner	14.5	5.75	1.6
88-30	#2	32	7.06	4.4
	#2 inner	30	5.75	3.6
M88-30-OEM	#12	32	8.00	5.5

Krystil Klear Products
| Liquid Bag Housings | Liquid Cartridge Housings | Inline Strainer Housings | Fuel / Hydraulic Housings |

© 1998, 2003 Krystil Klear Filtration

PRODUCT DIMENSIONS
AF SERIES FILTERS

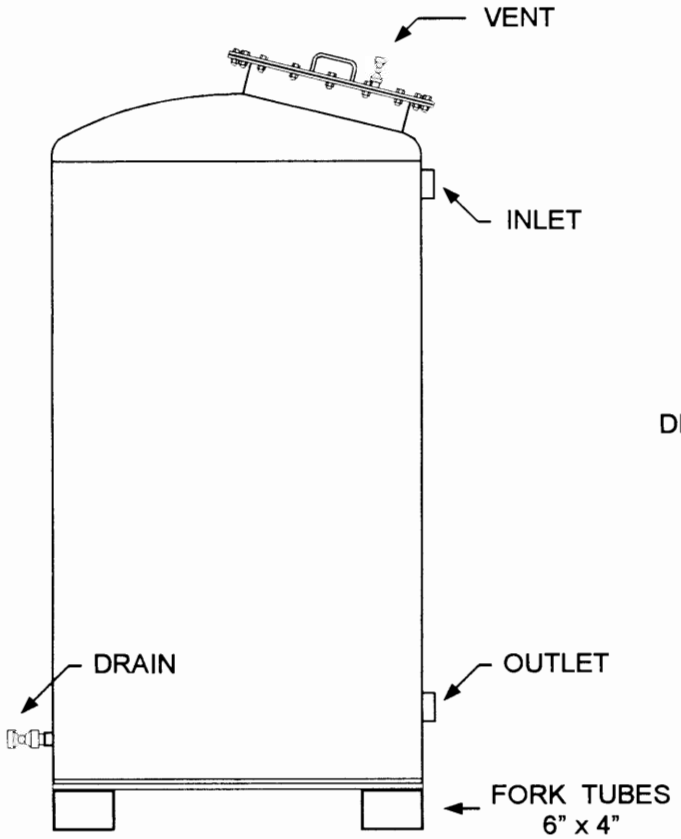

ELEVATION VIEW
NOT TRUE ORIENTATION

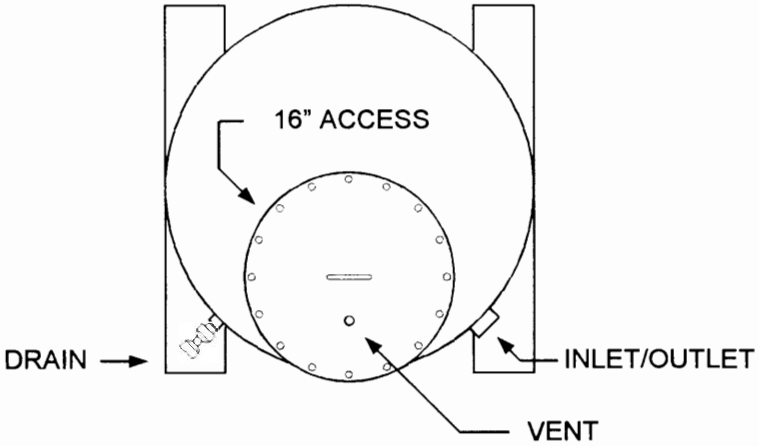

PLAN VIEW
TRUE ORIENTATION

NOTES

1. AF-250 HAS 8" FLANGED ACCESS NOT 16"
2. FORK TUBES OPTIONAL ON AF-250

DETAILED DRAWINGS AVAILABLE FOR INDIVIDUAL PRODUCTS

AF SERIES STANDARD DIMENSIONS

Model # (AF-) ⇨	**250**	**500**	**1000**	**2000**	**3000**	**5000**	**10000**
Overall Height	3' 11"	5' 3"	6' 5"	7' 7"	7' 10"	9' 0"	9' 4"
Footprint	2' x 2'	2' 6" x 2' 6"	3' x 3'	4' x 4'	5' x 5'	6' x 6'	8' x 8'
Diameter	24"	30"	36"	48"	60"	72"	96"
Inlet/Outlet (FNPT)	2"	2"	2"	3"	3"	4"	6"
Drain / Vent (FNPT)	OPT.	½" / ¼"	½" / ¼"	¾" / ½"	1" / ½"	1½" / ¾"	2" / 1"
GAC Fill (Lbs)	250	500	1,000	2,000	3,000	5,000	10,000
Ship Weight Loaded (Lbs)	415	875	1,500	2,925	4,375	7,300	13,150
Operational Weight (Lbs)	850	1,765	3,100	6,400	9,875	16,550	29,050

PRODUCT DATA SHEET
AF SERIES FILTERS
MODEL AF-500

GENERAL DESCRIPTION

The AF-500 filter is a media filter vessel designed to treat liquid streams. While the typical design application is a activated carbon adsorbtion unit, the filter can easily accommodate many medias. Some applications include:

- Dissolved Organic Removal (Activated Carbon)
- Suspended Solids Removal (Sand Filter)
- Dissolved Minerals (Softener Resin)
- Oil and Grease Removal (Organo-Clays)
- Dissolved and Precipitated Metals Removal
- Special Organics (Resin/Carbon Blends)
- Catalytic Reactor (Chlorine and Peroxide Removal)
- Bio-Remediation Contacter Unit

AF-500 STANDARD SPECIFICATIONS

Specification	Specification Value	Options
Materials (Vessel)	Carbon Steel (SA-36)	Stainless Steel
Materials (Internal Piping)	SCH 80 PVC	PPL, PVC80, CPVC, 304SS, 316SS
Internal Coating	Polyamide Epoxy Resin	Vinyl Ester, PVC
External Coating	Epoxy Mastic	Any available coating
Maximum Pressure	40 PSIG	Up to 60 PSIG
Maximum Temperature	140° F (Limited by coating and PVC Internals)	Up to 300° F
Cross Sectional Bed Area	4.9 FT^2	Custom sizes available
Bed Depth	3.4 FT (Using 500 Lbs. 8*30 GAC)	Dependent upon supplied media
Bed Volume	16.7 FT^3 (Using 500 Lbs. 8*30 GAC)	Up to 19.5 FT^3

CONTACT TIME VS. FLOW RATE
*(8*30 GAC)*

Flow Rate	Single Bed	Dual Bed
10 GPM	12 Minutes	24 Minutes
20 GPM	6 Minutes	12 Minutes
30 GPM	4 Minutes	8 Minutes
40 GPM	3 Minutes	6 Minutes

PRESSURE DROP GRAPH
*(As Filled - 8*30 GAC)*

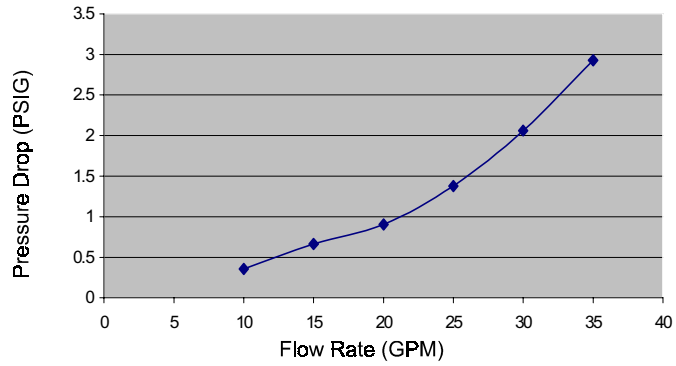

Rev. 10/17/2000

1200 E. 26th Street · Anderson, Indiana 46016
Phn: 765-643-3941 Fax: 765-643-3949 Email: info@tetrasolv.com

Operation & Maintenance Manual

~~AFD~~ • AF • ~~HPP • HPAF SERIES~~

Tetrasolv Filtration Liquid Filters

Liquid & Vapor Filtration
Remedial • Industrial • Municipal

CONTENTS

1.0 General Description 1

2.0 Safety Considerations 1

3.0 Installation 2
3.1 Shipment 2
3.2 Unloading 2
3.3 Inspection 2
3.4 Set Up 2
3.5 Wetting & Dearation 3

4.0 Operation 3
4.1 Modes of Operation 3
4.2 Back-washing 3
4.3 Monitoring 4

5.0 Filtration Media Replacement 4
5.1 Media Loading - Dry Method 4
5.2 Carbon Loading - Slurry 5
5.3 Carbon Removal - Slurry Method 6

6.0 Maintenance 6
6.1 Extended Shut Down 6
6.2 Valve Replacement 6
6.3 Manway Opening and Closing 6

7.0 Troubleshooting 6

1.0 GENERAL DESCRIPTION

The liquid series filters utilize fixed bed filtration to treat water. The filters employ a variety of medias to remove or catalyze contaminants. Flow through the filter may be either up flow or down flow depending upon the media supplied and the operation parameters. Generally inlet and outlet locations are indicated on the filter and or the filter drawings.

Product data sheets, drawings, MSDS, etc are available from www.tetrasolv.com or call the number below or email your request to support@tetrasolv.com.

2.0 SAFETY CONSIDERATIONS

It is important that the entire O&M manual be read prior to set up and operation of the carbon system.

♦ ***WARNING: We strongly recommend the use of a relief device in all installations. Exceeding the maximum pressure of the filter could result in catastrophic failure of the vessel.***

- Always adhere to “lockout/tagout” procedures when servicing the system.
- Wear appropriate safety equipment when operating system.
- Review the MSDS sheet for the installed media prior to working with the installed carbon.

♦ ***WARNING: Wet or dry activated carbon preferentially removes oxygen from air. In closed or partially closed containers, oxygen depletion may reach hazardous levels. If workers must enter a container containing carbon, appropriate sampling and work procedures should be followed for potentially low-oxygen spaces - including all applicable federal and state requirements.***

- Understand the potential hazards of the stream

COPYRIGHT © 1998 - TETRASOLV FILTRATION. - 1200 E. 26TH STREET - ANDERSON, IN 46016 - PHONE (765) 643-3941
WWW.TETRASOLV.COM

being treated by the system. The media may contain higher concentrations of the contaminants being adsorbed than is in the influent stream. In addition the media may be considered hazardous material and therefore may require specific handling precautions unknown to Tetrasolv Filtration.

3.0 INSTALLATION

3.1 Shipment

Typically filters are shipped with media installed. However, in certain instances media is shipped to the site to be installed after installation. In very large systems it may be advisable to not install the media until adsorbers have been placed into final position and secured.

3.2 Unloading

Refer to the product data sheet for weight information for appropriate sizing information for the equipment to be used.

All components should be lifted either by crane or forklift as designated by the model.

♦ ***WARNING: Failure to follow the procedures outlined below can result in catastrophic damage to the system.***

Crane Lift - If a crane lift is to be used we recommend the following method. A "spreader" equaling 75% of the distance between the opposing lifting eyes on each adsorber should be used to insure proper lifting force direction. Attach an appropriately sized spreader beam and lifting cables to each lift eye of the component. The use of an experienced crane operator and quality equipment is highly recommended.

Fork-Lift - When using a forklift we recommend that the fork tubes on the filter be used or a pallet if the unit was shipped on a pallet.

♦ ***WARNING: Never attempt to pick up an adsorber which has wet carbon installed. The lifting eyes are designed only to lift the adsorber with dry carbon installed.***

3.3 Inspection

Perform the following inspections after un-loading the filter. Note any discrepancies and contact Tetrasolv Filtration immediately.

- Check the vessel exterior for damage which may have occurred during shipment. Inspect the support structures and piping support for damage.
- Inspect the piping system for damage. Insure the valves operate properly. Check installed instruments and instrument installation points for damage.
- Visually inspect the interior (if possible) of the vessel for loose laterals and or internal damage.
- Inspect the carbon discharge, drain and vent valves for damage.

3.4 Set Up

The filter should be placed on a level concrete pad of appropriate thickness to support the system at it's maximum operational weight. The filter should be secured to the pad using appropriately sized anchor bolts.

Connect the site piping to the filter inlet and outlet connection points. It is important that all piping connected to the filter should be self supported. We also recommend in hard pipe installation that a flexible joint be used to further insulate the filter from vibration and stress.

Connect any gauges and instrumentation shipped loose with the system.

The outlet piping should be designed to allow flooded operation of the Adsorber at all times to assure effective operation. If the outlet line does not provide for back pressure on the Adsorber unit, then the discharge piping should include an elevated piping loop to assure flooded operation.

Siphoning can occur when the discharge line allows suction to be placed on the process discharge. Siphoning can cause air pockets to occur in the adsorbers. If channeling is likely to occur we recommend the installation of an appropriately sized vacuum breaker.

If the supply pump is capable of producing pressure greater than the design limitation of the filter it is recommended that a rupture disk or pressure relief valve be installed prior to the influent connection.

COPYRIGHT © 1998 - TETRASOLV FILTRATION. - 1200 E. 26TH STREET - ANDERSON, IN 46016 - PHONE (765) 643-3941
WWW.TETRASOLV.COM

If water conditions such as high suspended solids exist a filter should be installed prior to the Adsorber. A simple cartridge or screen filter helps prevent pressure buildup in the media bed. Many other water issues may effect Adsorber operation and we therefore recommend you discuss your specific installation with a representative.

Connect the process inlet and outlet to the site influent and effluent process lines.

3.5 Wetting and Deaeration

Dry carbon and other medias must be wetted and deaerated prior to use. This procedure displaces air from the internal structure of the carbon granule, thus assuring that the liquid to be treated is in contact with the carbon surface.

Prior to operation, the filter must be filled with clean, uncontaminated liquid. The recommended method for filling the vessel is through the outlet line. Open the inlet line to purge air from the system. Feed water into the outlet line until water flows from the inlet line. The wet carbon or media should be allowed to set for a minimum of 1 hours.

This is also a good time to inspect the system for leaks which may have been caused in transit and unloading the system. If leaks are spotted, tighten the fitting or flange bolts carefully until the leak stops. Do not overtighten the bolt or fitting. If the leak persists contact Tetrasolv Filtration for assistance.

After wetting, the carbon bed can be deaerated by draining the adsorber, and again filling the adsorber upflow with uncontaminated water. This procedure will eliminate any air pockets which may have formed between the carbon granules.

After completing the wetting and Dearation it is recommended that a backwash be performed. The backwash will remove media fines which can cause excess pressure drop in the system if not removed. In addition backwashing helps equalize the bed. Follow the directions outlined in Backwashing ***(refer to section 4.2)***.

After backwashing close the system valves and wait 1 hour.

The system is now ready for operation.

4.0 OPERATION

Flowrates to the filter should be determined based upon the required contact time between the liquid and the filtration media. The required contact time normally is determined prior to installation and operation of the filter.

It is important that the filters remain flooded at all times. If it is necessary to drain adsorbers while off-line it is recommend the procedures in section 3.5 “Wetting and Dearation” be repeated.

4.1 Modes of Operation

With certain applications (2) filters in series flow are utilized. Listed below are typical operational modes.

- Shutdown - Both filters completely off-line and isolated.
- Series Flow - Influent enters primary filter and exits through secondary adsorber (this is the preferred method of operation)
- Isolation Flow - Only one filter is receiving influent. This mode is typically used when the operator is maintaining the off-line filter.
- Parallel Flow - Both filters are receiving the influent as the primary. Flow is split equally between the filters. This mode is used when higher flow rates need to be achieved and contact times are not critical.
- Backwash Mode - Used when back-washing either filter.

4.2 Backwashing

IMPORTANT: Backwashing is not advisable with AFD or AF Series Filters. If a backwash is required please contact the number below or support@tetrasolv.com for assistance.

Usually backwashing is only performed in carbon adsorbers after new carbon has been installed or prior to removing the carbon from the adsorber. However, sometimes water conditions necessitate backwashing to remove suspended solids from the top of the carbon bed. Keep in mind that backwashing a carbon bed during normal service runs may cause the transfer zone to be disturbed leading to pre-mature breakthru of the carbon bed. Backwashing helps to reduce and equalize pressure drop across the media bed as well as removes

COPYRIGHT © 1998 - TETRASOLV FILTRATION. - 1200 E. 26TH STREET - ANDERSON, IN 46016 - PHONE (765) 643-3941
WWW.TETRASOLV.COM

collected particulate from the top of the bed. Backwash rates for filters typically fall in the 5 to 20 gpm/ft^2. Backwash rates are dependent upon temperature of the backwash water, filter design and the media conditions. Refer to the data sheet for the supplied filter to obtain the cross sectional bed area. Refer to the data sheet for the supplied media to obtain the recommended backwash rate. Backwashing should begin at a low rate and proceed upwards.

Clean, uncontaminated, sediment free water is introduced to the filter through the outlet connection. This liquid flows upwards through the filter and exits through the inlet line - directed to a back-wash water collection point or drain. The flow rate should not be high enough to cause a significant quantity of media to exit.

IMPORTANT: Use only clean un-contaminated water free of sediments. If there is any question that sediments may be present the water should be filters through a 100 micron filter or smaller. Sediments introduced into the lateral system during backwash can cause excessive pressure build-up in the underdrain leading to underdrain failure.

If possible position an observer at the backwash discharge point. The adsorber should note excessive media loss and general appearance of the backwash effluent. If conditions warrant the observer should also instruct that the backwash be stopped.

Monitor the differential pressure for the filter being backwashed during the operation. If the differential pressure exceeds 30 PSIG discontinue the backwash and contact Tetrasolv Filtration.

IMPORTANT: Differential Pressure exceeding 30 PSIG during backwash may damage the vessel underdrain.

4.3 Monitoring

Filter units only require periodic monitoring if properly installed. The following items may be monitored:

- Pressure: Check inlet and outlet pressure. Increase in pressure differential may indicate build-up of filtered solids. Never exceed maximum design pressure of filter. If the differential pressure exceeds 20 PSIG it may become necessary to perform a backwash ***(see Backwashing Section 4.2)***

- Samples: Inlet and outlet sample points if provided for liquid analysis to determine system performance. Before pulling a sample the sample valve should be opened and allowed to flow freely for a few minutes to insure a fresh sample is obtained.

- Air: Check for trapped air by opening upper vent valve and allowing small amount of liquid to flow out. If your system was provided with automatic vent systems it is still necessary to periodically verify their operation.

- Inspect the discharge stream periodically for filtration media. If filter media is present in the exit stream shut down the system and contact Tetrasolv Filtration immediately.

Note: When the system if first started up small amounts of fines may be present. This is normal and should discontinue within a short period of time.

5.0 FILTRATION MEDIA REPLACEMENT

Prior to servicing the unit should be closed off from influent and effluent lines and any electrical devices or connections should be tagged off.

After removal of the filtration media is complete, it is recommended that the inside of the filter be washed to remove all contamination and any trace of spent media. After the filter has been washed, the filter should also be checked thoroughly and any minor maintenance conducted.

5.1 Media Loading - Dry Method

Fill the adsorber 1/4 full of clean water to protect the lower manifold and limit the amount of dust generated.

♦ ***WARNING - Dry activated carbon generates considerable dust. While activated carbon poses no health risk the dust can cause respiratory irritation and occasional skin rash. Therefore we recommended the use of proper clothing and dust mask during filling operation.***

Super Sacks - Hoist the bag over the manway and untie the outer bag exposing the inner chute. Untie the inner chute while clasping it shut. Remain holding the chute and carefully lower the chute into the manway. Un-clasp the chute and allow the carbon to discharge from the sack. The carbon should flow out very quickly and completely. When finished shake the bag and invert the chute into the bag.

COPYRIGHT © 1998 - TETRASOLV FILTRATION. - 1200 E. 26TH STREET - ANDERSON, IN 46016 - PHONE (765) 643-3941
WWW.TETRASOLV.COM

If at any time you wish to stop the flow of carbon simply re-grasp the chute up high and cinch. Re-tie the bag.

5.2 Media Loading - Slurry Method

In this method dry-activated carbon will be delivered to the site in a slurry truck or slurry capable hoppers. To add the carbon to the filters use the following method:

- ***WARNING: Carbon slurry operation is a potentially hazardous operation which should only be performed by experienced operators with prior slurry experience. If you are un-trained do not attempt to perform a slurry without assistance.***

1. Use an appropriate sized hose connected to the carbon supply line for the adsorber. **Be sure the slurry line is adequately secured and the cam-lock mechanism is completely engaged. If the slurry line disconnects or fails large amounts of carbon will be expelled.**

2. Fill the adsorber 1/4 full of water to cushion the vessel internals from the entering carbon.

3. Completely cover the fresh carbon with clean water. Connect air source to the slurry container capable of producing 10 PSIG of air at 175 cfm.

4. Open the adsorber process outlet valve to allow excess water to escape the system (note: depending upon your discharge piping configuration this may not allow sufficient water drainage under non-pressure operation, consult Tetrasolv Filtration). Open the slurry in valve. Fresh carbon should begin flowing quickly into the filter. During this process it may become necessary to stop the slurry and allow excess water to drain from the adsorber.

5. When transfer is complete the transfer hose will begin blowing air only. It may be necessary to inspect the transfer hopper for carbon which did not transfer. If a sufficient quantity is present wash the carbon to the center using clean water and add enough water to re-cover the carbon and repeat the above procedures.

6. Close the valves and proceed to Section 3.5 “Wetting and Deaeration” then perform a backwash.

5.3 Media Removal - Slurry Method

This method can only be used with slurry equiped HPAF Series!

In this method spent activated carbon will be removed from the spent adsorber into a slurry truck or slurry capable hoppers. To remove the carbon from the filter use the following method:

- ***WARNING: Carbon slurry operation is a potentially hazardous operation which should only be performed by experienced operators with prior slurry experience. If you are un-trained do not attempt to perform a slurry without assistance.***

Backwashing the adsorber to be serviced for a few minutes prior to servicing will make the slurry occur more easily. It is important the the adsorber to be backwashed be full of water prior to attempting the slurry.

1. Connect the carbon discharge line to the carbon discharge connection on the adsorber to be emptied.

2. Connect an air source to the carbon fill line capable of producing 50 PSIG of air at 175 cfm.

- ***WARNING - The inlet air should be closely monitored to insure the pressure does not exceed the design pressure leading to rupture disc activation. If this can not be done the use of a pressure limiting device which still allows adequate air flow should be used.***

3. Open the air vent valve and pressurize the adsorber to 15 PSIG.

IMPORTANT: The initial pressure required for slurry transfer will be between 10 and 20 PSIG. Because of the compressibility of air the pressure should be reduced as the adsorber empties. If the operator supplying compressed air into the adsorber cannot see the pressure gauge there must be another operator who can call out the pressure reading during the transfer.

4. Open the slurry out valve. Spent carbon should begin flowing quickly out of the carbon vessel.

5. When transfer is complete the transfer hose will begin blowing air only. Bleed all air from the adsorber, remove the manway and inspect the adsorber for carbon which did not transfer. If a sufficient quantity is present wash the carbon to the center using clean water and add enough water to re-cover the carbon and repeat the above procedures.

6. Inspect the internals prior to refilling the adsorber.

COPYRIGHT © 1998 - TETRASOLV FILTRATION. - 1200 E. 26TH STREET - ANDERSON, IN 46016 - PHONE (765) 643-3941
WWW.TETRASOLV.COM

Inspect the interior lining. Do not place the adsorber back into operation if any defects are noted.

6.0 MAINTENANCE

6.1 Extended Shut Down

If the filter will be shutdown for extended periods certain procedures should be taken to protect the filter.

If possible backflush the filter. Drain all water from the adsorber utilizing the effluent connection and the drain port if available. When draining allow air to enter the system by venting the influent line. Store the drained filter with system vented.

Caution should be taken during system startup following exposure to freezing conditions as the media may still be in a frozen state days or weeks after.

Prior to placing the adsorber back into service it is recommended the procedures outlined in section 3.5 "Wetting and Dearation" be followed.

Monitor the filter closely after extended shutdown for signs of potential problems such as interior manifold failure or leaking valves and gaskets.

6.2 Manway Opening & Closing

When it becomes necessary to open a manway the following methods should be closely followed:

- ***WARNING: Opening a manway while a vessel is pressurized can cause serious injury or death. Always verify pressure is relieved before attempting to remove a cover.***

- ***WARNING: Opening the lower manway on an filter which contains media can result in large quantities of media being discharged. Worse still the manway may not be able to be successfully sealed without removal of the media.***

Verify vessel is isolated and relieve pressure using filter vent valve.

Round T-Bolt Closures

1. Carefully loosen retaining nuts around manway ring. If while loosening the bolts you hear a hissing or any other indication of pressure immediately re-tighten the bolts and verify pressure has been relieved.

3. Swing all T-Bolts away from manway cover and slowly open cover. If gasket sticks to manway cover gently pry away to avoid tearing the gasket.

4. Clean O-Ring surface. Lubricate gasket with petroleum jelly.

5. Close manway and tighten bolts. It may be necessary to further tighten bolts after pressure has been applied to filter to prevent leaking.

Elliptical Closures

1. Slip a bent bar between the manway handle and the flange frame. ***This is to insure the manway does not fall into the vessel when the yokes are removed.***

2. Carefully loosen both large nuts holding the yokes to the manway. Remove the yokes.

3. Slide the bar out of the handle while holding it. Push the manway in and tilt to allow the manway to be pulled out of the filter.

Closing the manways:

1. Clean the gasket surface and replace if necessary. Apply tape to the gasket and the cover to hold the gasket in place while it is placed into position.

2. Slip a bent bar between the manway handle and the flange frame. ***This is to insure the manway does not fall into the vessel when the yokes are removed.***

3. Place the yoke into the manway cover slot and hand tighten. Carefully inspect the gasket to be sure it can be seen around the inside surface of the manway opening.

4. Wrench tighten nuts.

7.0 Troubleshooting

The following situations are typical problems which may arise during the operation of filters. If these problems cannot be resolved by using this guide or problems occur which are not addressed in this guide please contact TetraSolv Filtration at the number listed below or e-mail **support@tetrasolv.com**

COPYRIGHT © 1998 - TETRASOLV FILTRATION. - 1200 E. 26TH STREET - ANDERSON, IN 46016 - PHONE (765) 643-3941
WWW.TETRASOLV.COM

Situation:

High pressure drop or inadequate flow through filters at expected pressure drop levels.

Probable Cause:

a) Verify effluent and influent lines to and from adsorber are not restricted.

b) Sediments or solids may have clogged the surface of the media. Remove the top manway cover and inspect the surface of the media. Backwashing the media should resolve this issue. Explore the possibility of pre-filtration ahead of the media filter to limit future problems.

c) Air is trapped in the top of the filter or the system piping. Relieve air using vent valves.

d) Underdrain collection baskets clogged. Contact Tetrasolv Filtration for recommendations.

Situation:

Manways failing to seal. Water leaking from.

Probable Cause:

a) Manway not installed properly.

b) Missing or damaged gasket

c) Debris trapped between gasket and ring

Solution:

Tighten the bolts on the manway first. If this does not solve the problem remove and reinstall manway as outlined in 6.4 if possible. If problem persists contact TetraSolv Filtration for further assistance.

Situation:

Premature filter exhaustion.

Probable Cause:

a) Inadequate contact time between the media and the liquid stream.

b) Contaminants in stream not originally accounted for in initial design or higher levels of contaminants than originally accounted for.

c) Trapped air or solids on bed causing channeling.

Solution:

Sample and analyze the influent water stream. Verify proper conditions exist. Also look closely at suspended and dissolved solids.

Verify contact time sufficient for contaminate being adsorbed. Decrease flow rate or install additional media.

Inspect surface of filter for fouling.

Release excess air from top of filter through filter vent line.

Situation:

Activated Carbon bed discharge stream has higher level of contaminants than influent stream.

Probable Cause:

Carbon bed has reached saturation. Carbon beds will often release larger amounts of contaminants than they are adsorbing as the mechanical bonds are broken when the carbon has reached it's saturation point.

Also, activated carbon will preferentially exchange more easily adsorbed compounds for ones already trapped in the carbon surface releasing the compounds trapped in unpredictable levels.

COPYRIGHT © 1998 - TETRASOLV FILTRATION. - 1200 E. 26TH STREET - ANDERSON, IN 46016 - PHONE (765) 643-3941
WWW.TETRASOLV.COM

Catalog

Contents:

Liquid Filters

Vapor Filters

VFD Series
- VFD-30
- VFD-55
- VFD-85
- VFD-110

VFV Series
- VFV-250
- VFV-500
- VFV-1000
- VFV-2000
- VFV-3000
- VFV-5000
- VFV-10000

VF Series
- VF-500
- VF-1000
- VF-2000
- VF-3000
- VF-5000
- VF-10000

VR Series
- VR-140
- VR-170
- VR-225
- VR-400
- VR-700
- VR-1600
- VR-2600

Filtration Media

Special Products

VR SERIES FILTERS
MODEL VR-400

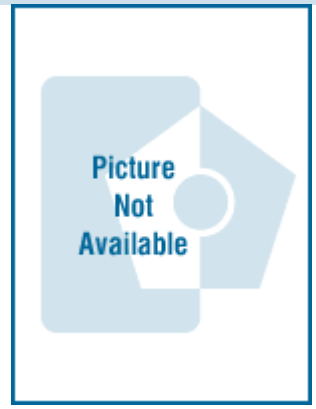

The VR-400 filter is a radial flow filter vessel designed to treat vapor streams where pressure drop is a strong concern. With the radial design in certain applications the user can obtain higher flow rates than could be obtained in similar upflow filters. Some applications include:

- Soil Vapor Extraction Treatment
- Air Stripper Off Gas Treatment
- Odor Removal System
- Storage Tank Purge Vapor Treatment
- Industrial Process Treatment

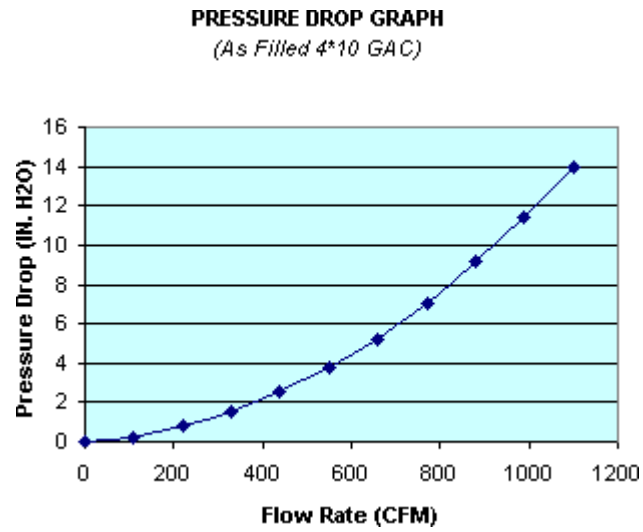

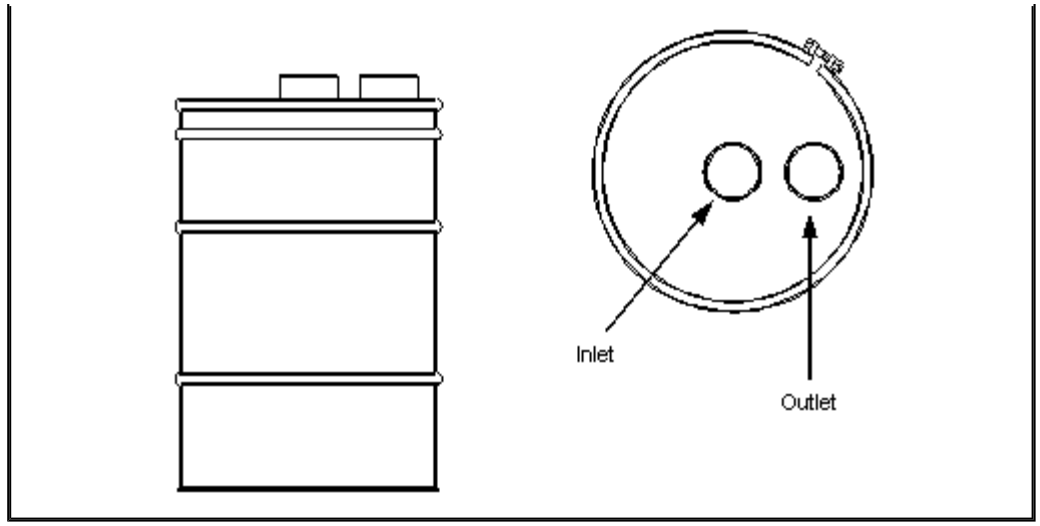

VR-400 SPECIFICATIONS			
Overall Height	3'11"	Vessel/Internal Piping Materials	CS/ SCH 40 PVC
Diameter	30"	Internal Coating	Polyamide Epoxy Resin
Inlet / Outlet (FNPT)	6"	External Coating	Urethane Enamel
Drain / Vent (FNPT)	OPT	Maximum Pressure / Temp	2 PSIG / 150º F
GAC Fill (lbs)	400	Cross Sectional Bed Area	8.8 FT^2
Shipping / Operational Weight (lbs)	500/575	Bed Depth/Volume	11.7 IN / 14.25 FT^3

Tetrasolv Filtration, Inc. • 1200 East 26th Street • Anderson, Indiana 46016 • USA
Toll Free: 800-441-4034 Telephone: 765-643-3941 • Fax: 765-643-3949
www.tetrasolv.com • info@tetrasolv.com

VFD SERIES FILTERS
MODEL VFD-30

The VFD-30 filter is a media filter vessel designed to treat vapor streams. While the typical design application is a activated carbon adsorbtion unit, the filter can easily accommodate many medias. The sturdy construction makes these filter vessels ideal for long term treatment units. Some applications include:

- Soil Vapor Extraction Treatment
- Air Stripper Off Gas Treatment
- Odor Removal System
- Storage Tank Purge Vapor Treatment
- Pilot Study
- Industrial Process Treatment

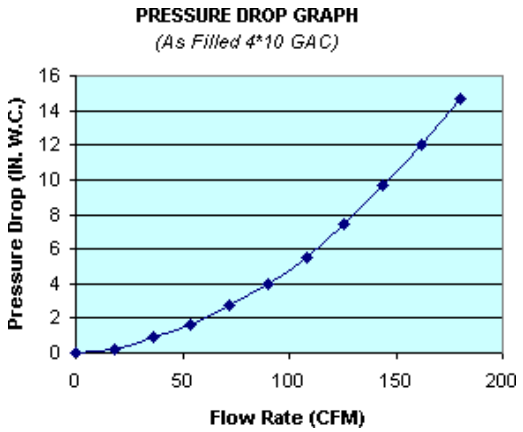

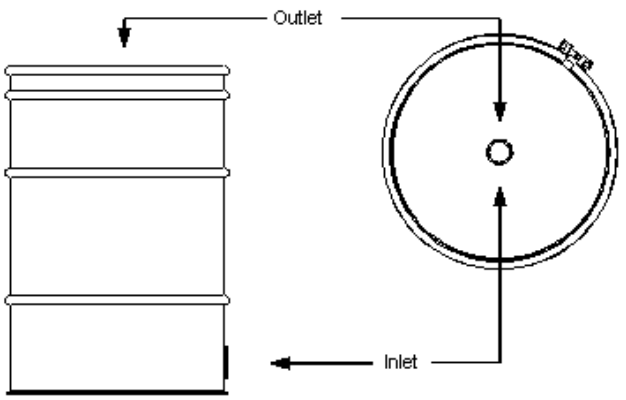

VFD-30 SPECIFICATIONS			
Overall Height	2’6”	Vessel/Internal Piping Materials	CS/CS (False Floor)
Diameter	18”	Internal Coating	Polyamide Epoxy Resin
Inlet / Outlet (FNPT)	2”	External Coating	Urethane Enamel
Drain / Vent (FNPT)	OPT	Maximum Pressure / Temp	4 PSIG / 250º F
GAC Fill (lbs)	100	Cross Sectional Bed Area	2.8 FT^2
Shipping / Operational Weight (lbs)	135/160	Bed Depth/Volume	2.2 FT / 6.3 FT^3

Tetrasolv Filtration

Operation & Maintenance Manual

VFD • ~~VFV • VF~~ • VR SERIES

Liquid & Vapor Filtration
Remedial • Industrial • Municipal

Tetrasolv Filtration Vapor Filters

CONTENTS

1.0 General Description 1
2.0 Safety Considerations 1
3.0 Installation 2
3.1 Shipment 2
3.2 Unloading 2
3.3 Inspection 2
3.4 Set Up 3
4.0 Operation 3
4.1 Modes of Operation 3
4.2 Monitoring 3
5.0 Adsorber Servicing 4
5.1 Carbon Loading - Bulk Bag 4
5.2 Carbon Loading - Vacuum Method 4
6.0 Maintenance 4
6.1 Extended Shut Down 4
6.2 Valve Replacement 4

1.0 GENERAL DESCRIPTION

The **vapor** series filters utilize fixed bed filtration to treat vapor. The filters employ a variety of medias to remove or catalyze contaminants. Flow through the filter may be either up flow or down flow depending upon the media supplied and the operation parameters. Generally inlet and outlet locations are indicated on the filter and or the filter drawings.

The most common application utilizes activated carbon as the adsorption media. Typically vapor which contains low levels of organic contaminants flows upward through the column of activated carbon where the larger organic molecules adhere to the porous structure of the activated carbon granules. This adsorption begins at the bottom of the “bed” and continues upward as the original adsorptive area becomes saturated.

Complete saturation of the carbon is dependent upon many factors such as contaminant levels, temperature, compounds being adsorbed, humidity, etc. Typically a carbon isotherm has been run on the influent stream to determine the expected rate of consumption of the activated carbon media. When monitoring has determined discharge air no longer meets discharge requirements the carbon will have to be removed and replaced ***(refer to section 5.0)***.

2.0 SAFETY CONSIDERATIONS

It is important that the entire O&M manual be read prior to set up and operation of the carbon system. If you have any questions please contact Tetrasolv Filtration at the number listed below or support@tetrasolv.com.

- ***WARNING: Where system pressure may exceed design pressure we strongly recommend the use of a relief device. Exceeding the maximum pressure of the filter could result in catastrophic failure***

COPYRIGHT © 1998 - TETRASOLV, INC. - 484 E. CARMEL DR., SUITE 339 - CARMEL, IN 46032 - PHONE (317) 818-0600

of the vessel.

- Always adhere to “lockout/tagout” procedures when servicing the system.

- Wear appropriate safety equipment when operating system.

♦ ***WARNING: Wet or dry activated carbon preferentially removes oxygen from air. In closed or partially closed containers, oxygen depletion may reach hazardous levels. If workers must enter a container containing carbon, appropriate sampling and work procedures should be followed for potentially low-oxygen spaces - including all applicable federal and state requirements.***

♦ ***WARNING: High concentrations of certain compounds such as BETX and low concentrations such as ketones, aldehydes, organic acids and sulphur may cause severe temperature rises.***

- Understand the potential hazards of the stream being treated by the system. The activated carbon may contain higher concentrations of the contaminants being adsorbed than is in the influent stream. In addition the carbon may be considered hazardous material and therefore may require specific handling precautions unknown to Tetrasolv Filtration.

3.0 INSTALLATION

3.1 Shipment

Typically filters are shipped with media installed. However, in certain instances media is shipped to the site to be installed after installation. In very large systems it may be advisable to not install the media until adsorbers have been placed into final position and secured.

3.2 Unloading

Refer to the product data sheet for weight information for appropriate sizing information for the equipment to be used.

All components should be lifted either by crane or forklift as designated by the model.

♦ ***WARNING: Failure to follow the procedures outlined below can result in catastrophic damage to the system.***

Crane Lift - If a crane lift is to be used we recommend the following method. A “spreader” equaling 75% of the distance between the opposing lifting eyes on each adsorber should be used to insure proper lifting force direction. Attach an appropriately sized spreader beam and lifting cables to each lift eye of the component. The use of an experienced crane operator and quality equipment is highly recommended.

Fork-Lift - When using a forklift we recommend that the fork tubes on the filter be used or a pallet if the unit was shipped on a pallet.

3.3 Inspection

Perform the following inspections after un-loading the system. Note any discrepancies and contact TetraSolv immediately.

- Check the vessel exterior for damage which may have occurred during shipment. Inspect the support structures and piping support for damage.

- Inspect the piping system for damage. Insure the valves operate properly. Check installed instruments and instrument installation points for damage.

- If the filters are shipped without carbon visually inspect the interior of the vessel for damaged internals.

- Inspect the carbon discharge, drain and vent valves for damage

3.4 Set Up

The filter should be placed on a level concrete pad of appropriate thickness to support the system at it’s maximum operational weight. The filter should be secured to the pad using appropriately sized anchor bolts.

Connect the site piping to the filter inlet and outlet connection points. It is important that all piping connected to the filter should be self supported. We also recommend in hard pipe installation that a flexible joint be used to further insulate the filter from vibration and stress.

Connect any gauges and instrumentation shipped

COPYRIGHT © 1998 - TETRASOLV, INC. - 484 E. CARMEL DR., SUITE 339 - CARMEL, IN 46032 - PHONE (317) 818-

loose with the system.

The outlet piping if connected to a stack or vent should be designed to prevent the introduction of water or debris into the adsorber piping. Discharge piping should be sized equal to or greater than the diameter of the system piping or back pressure could occur creating excess pressure drop on the system.

Flowrates greater than 60 cfm / sq ft can produce bed fluidization in vapor phase filters. When this occurs carbon granules can be lifted and propelled out of the carbon bed in up-flow applications. In extreme cases large amounts of carbon can be expelled. If the system will be operating near or greater than the amount stated above please contact Tetrasolv for recommendations.

Carbon filters can be manifold in parallel operation for higher flowrates. Series operation is the preferred method of operation as it provides for the greatest degree of bed utilization.

Vapor conditions such as high humidity and high temperature (> 125º F) can cause inefficient adsorbtion to occur. If these conditions exist contact Tetrasolv for support. Also, any free water or product and debris should be eliminated with a knockout filter prior to the vapor stream entering the system. Many other vapor issues may effect Adsorber operation and we therefore recommend you discuss your specific installation with a representative.

4.0 OPERATION

4.1 Modes of Operation

With certain applications (2) filters in series flow are utilized. Listed below are typical operational modes.

- Shutdown - Both filters completely off-line and isolated.
- Series Flow - Influent enters primary filter and exits through secondary adsorber (this is the preferred method of operation)
- Isolation Flow - Only one filter is receiving influent. This mode is typically used when the operator is maintaining the off-line filter.
- Parallel Flow - Both filters are receiving the influent as the primary. Flow is split equally between the filters. This mode is used when higher flow rates need to be achieved and contact times are not critical.

4.3 Monitoring

Adsorber units only require periodic monitoring if properly installed. The following items may be monitored:

Pressure: Check inlet and outlet pressure. Increase in pressure differential may indicate media breakdown or presence of high moisture. Rapid increase in pressure drop could indicate adsorber failure.

Samples: Inlet and outlet sample points if provided for vapor analysis to determine system performance.

5.0 ADSORBER SERVICING

The Adsorber may be serviced on-site using a vacuum removal method. Prior to servicing the unit should be closed off from influent and effluent lines and any electrical devices or connections should be tagged off.

After removal of the spent carbon is complete, it is recommended that the inside of the Adsorber be checked thoroughly and any minor maintenance conducted.

5.1 Carbon Loading - Bulk Bag

♦ ***WARNING - Dry activated carbon generates considerable dust. While activated carbon poses no health risk the dust can cause respiratory irritation and occasional skin rash. Therefore we recommended the use of proper clothing and dust mask during filling operation.***

Hoist the bag over the manway and untie the outer bag exposing the inner chute. Untie the inner chute while clasping it shut. Remain holding the chute and carefully lower the chute into the manway. Un-clasp the chute and allow the carbon to discharge from the sack. The carbon should flow out very quickly and completely. When finished shake the bag and invert the chute into the bag.

If at any time you wish to stop the flow of carbon simply re-grasp the chute up high and cinch. Re-tie the bag.

COPYRIGHT © 1998 - TETRASOLV, INC. - 1200 E. 26TH STREET - ANDERSON, IN 46016 - PHONE (765) 643-3941

5.2 Carbon Loading - Vacuum Method

In this method dry-activated carbon will be loaded into to the adsorbers using a vacuum rig. To add the carbon to the filters use the following method:

WARNING: Due to the low vacuum rating of the VF series adsorbers (< 60" H_20) only experienced change-out personnel should attempt this method of re-filling. Exceeding the recommend vacuum rating could lead to failure of the superstructure of the vessel.

1. Connect a 3" vacuum source to the auxiliary connection of the adsorber to be filled.

2. Install a 16" bolted transfer lid onto the manway opening of the adsorber to be filled.

3. Turn on the vacuum and check for good flow of air through the adsorber. Connect the fill line to the transfer lid and lead enough hose to reach the fresh carbon source (Note: This should be as short of a distance as possible).

4. Begin vacuuming carbon into the adsorber. It is important to note that the loading method is actually conveying and not true vacuum. The hose should contain 1/3 air with the carbon. Closely view the adsorber being filled. If the adsorber is collasping in excessively take less carbon and more air. This is something from experience and cannot be adequately explained here.

5. When transfer is complete the transfer lid should be removed and the carbon in the adsorber should be leveled out to insure even pressure drop across the bed.

6. Close the manway and turn the adsorber back on.

> ***Note: When the system if first started up small amounts of fines may be present in the discharge stream. This is normal and should discontinue within a short period of time.***

6.0 MAINTENANCE

6.1 Extended Shutdown

If the system is to be shutdown for extended period of time it is recommended that the valve be placed in shutdown mode and the system water drain valve be left open.

Monitor the system closely after extended shutdown for signs of potential problems such as interior manifold failure or leaking valves and gaskets.

COPYRIGHT © 1998 - TETRASOLV, INC. - 484 E. CARMEL DR., SUITE 339 - CARMEL, IN 46032 - PHONE (317) 818-

Section 5 - Instrumentation

Sub Section 5A – Pressure/Vacuum Device

- Dwyer Model 626-08-CH-P1-E1-S1 Air Sparge & Oil/Water Separator Transfer Pump, Pressure Transmitter Specifications
- Dwyer Model 626-07-CH-P1-E1-S1-LED Vapor Discharge Manifold Pressure Transmitter Specifications
- Dwyer Series 626 Pressure Transmitter Installation & Operating Instructions
- Ashcroft Model K1-7M02-42-F2 SVE Vacuum Transmitter Specifications
- Ashcroft Model K1 Pressure Transducer Instruction Sheet

Sub Section 5B – Temperature Devices

- Dwyer Model RRT225OU Enclosure Interior High Temperature Switch Specifications - Installation & Operating Instructions
- Pyromation Model R1T185L 48 3-012-8HN 71 T, SVE Manifold Temperature Transmitter Specifications
- Pyromation Model R1T185L 48 3-006-00-8HN 71, Air Sparge Temperature Transmitter Specifications
- Pyromation Series 440 Temperature Transmitter Installation & Operating Instructions

Sub Section 5C – Flow Devices

- Dwyer Model 2003-MP Air Sparge Flow Meter Specifications (FM-901 & FM-1001)
- Dwyer Model 2003 SVE Manifold Flow Meter Specifications (FM-001)
- Dwyer Model 2005 SVE Flow Meter Specifications (FM-102, FM-202 & FM-302)
- Dwyer Model 2002 SVE Flow Meter Specifications (FM-101, FM-201 & FM-301)
- Dwyer Magnehelic Series 2000 Differential Pressure Gauge Operating Instructions
- Dwyer Model DS-300-6 Air Sparge & SVE Flow Element Specifications (FM-910 & FM-1001; FM-102, FM-202 & FM-302)
- Dwyer Model DS-300-8 Air Sparge, SVE & Vapor Discharge Manifold Flow Element Specifications (FM-101, FM-201 & FM-301; FM-401; FM-2001)
- Dwyer Series DS-300 Flow Element Installation & Operating Instructions
- Dwyer Model MS-111-LCD Air Sparge Air Flow Transmitter Specifications (FM-2001)
- Dwyer Model MS-131-LCD Soil Vapor Extraction System Discharge Manifold Air Flow Transmitter Specifications (FM-401)
- Dwyer Series MS Air Flow Transmitter Installation & Operating Instructions
- Dwyer Model V4-2-U SVE & Air Sparge Flow Switch Specifications (FS-101, FS-201 & FS-301; FS-901 & FS-1001)
- Dwyer Series V4 Flow Switch Installation & Operating Instructions
- Dwyer Model DS-400-12 SVE Manifold Flow Element Specifications (FM-001)

- Dwyer Series DS-400 Flow Element Installation & Operating Instructions
- Istec Model 1810 Bag Filter Effluent, Water Flow Totalizer Specifications
- Istec Series 1800 Flow Totalizer Installation Instructions
- Delta P (IWC) vs. Flow Rate (SCFM) Graph - DS-400 - FM-001
- Delta P (IWC) vs. Flow Rate (SCFM) Graph - DS-300 - FM-101, FM-201 & FM-301
- Delta P (IWC) vs. Flow Rate (SCFM) Graph - DS-300 - FM-102, FM-202 & FM-302
- Delta P (IWC) vs. Flow Rate (SCFM) Graph - DS-300 - FM-901 & FM-1001
- Delta P (IWC) vs. Flow Rate (SCFM) Graph - DS-300 - FIA-401
- Delta P (IWC) vs. Flow Rate (SCFM) Graph - DS-300 - FIA-2001

Sub Section 5D – Level Devices

- Vegaflex Model FX61 Moisture Separator, Oil Water Separator & Product Tank Level Transmitter Product Information
- Vegaflex Model FX61 Level Transmitter Operating Instructions

Sub Section 5A – Pressure/Vacuum Devices

- Dwyer Model 626-08-CH-P1-E1-S1 Air Sparge & Oil/Water Separator Transfer Pump, Pressure Transmitter Specifications
- Dwyer Model 626-07-CH-P1-E1-S1-LED Vapor Discharge Manifold Pressure Transmitter Specifications
- Dwyer Series 626 Pressure Transmitter Installation & Operating Instructions
- Ashcroft Model K1-7M02-42-F2 SVE Vacuum Transmitter Specifications
- Ashcroft Model K1 Pressure Transducer Instruction Sheet

Model: 626-08-CH-P1-E1-S1
LED

Series 626 & 628

Industrial Pressure Transmitter

Complete Offering of Ranges, Connections and Outputs

Conduit Housing (-CH)

General Purpose Housing (-GH)

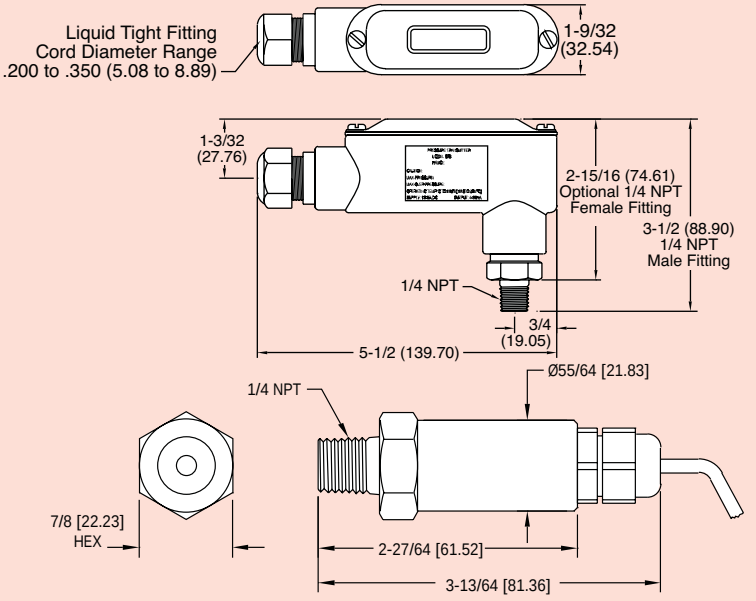

The Series 626 Pressure Transmitters possess a highly precise 0.25% piezo-resistive sensor contained in a compact, rugged, NEMA 4X stainless steel general purpose housing or cast aluminum conduit housing.

The Series 628 Pressure Transmitters are ideal for OEMs with 1% full scale accuracy sensors. The transmitter is also available in the general purpose stainless steel housing and the cast aluminum conduit housing.

The highly corrosive resistant 316L stainless steel wetted parts allow the Series 626 and 628 transmitters to measure the pressure in a multitude of processes from hydraulic oils to chemicals. The Series 626 and 628 are available in ranges of vacuum, compound to 5000 psi with a variety of optional outputs, process connections and electrical terminations to allow you to select the right transmitter for your application.

APPLICATIONS

- Compressors
- Pumping Systems
- Irrigation Equipment
- Hydraulic
- Industrial Process Monitoring

SPECIFICATIONS

Service: Compatible gases and liquids.
Wetted Materials: Type 316 SS, 316L SS.
Accuracy: 626: 0.25% full scale. 628: 1% full scale (includes linearity, hysteresis, and repeatability).
Temperature Limit: 0 to 200°F (-18 to 93°C).
Compensated Temperature Range: 0 to 175°F (-18 to 79°C).
Thermal Effect: 626: ±0.02% FS/°F. 628: ±0.04% FS/°F (includes zero and span).
Pressure Limits: See table.
Power Requirements: 13 to 30 VDC.
Output Signal: 4 to 20 mA. Optional 0-5, 1-5, 0-10, 1-6 or 2-10.
Response Time: 50 msec.
Loop Resistance: 0 - 1300 ohms maximum for current. For voltage outputs, minimum load resistance: 2000 ohms.
Current Consumption: 38 mA (maximum).
Electrical Connections: Conduit Housing (-CH): terminal block, 1/2″ female NPT conduit. General Purpose Housing (-GH): cable, DIN connector or 4 pin M-12.
Process Connection: 1/4″ male or female NPT and BSPT.
Enclosure Rating: NEMA 4X (IP66).
Mounting Orientation: Mount in any position.
Weight: 10 oz (283 g).
Agency Approvals: CE.

PRESSURE LIMITS

Range Number	Pressure Range (psig)	Maximum Pressure (psig)	Over Pressure (psig)	Range Number	Pressure Range (psig)	Maximum Pressure (psig)	Over Pressure (psig)
00	30″ Hg-0	30	150	11	0-150	300	750
01	30-0-15	30	150	12	0-200	400	1000
02	30-0-30	60	300	13	0-300	600	1500
03	30-0-45	100	300	14	0-500	1000	2500
04	30-0-60	200	500	15	0-1000	2000	5000
05	30-0-100	200	500	16	0-1500	3000	5000
06	0-5	10	50	17	0-2000	4000	5000
07	0-15	30	150	18	0-3000	6000	7500
08	0-30	60	300	19	0-5000	7500	10000
09	0-50	100	300	26	0-8000	10000	12000
10	0-100	200	500				

MODEL ORDERING CHART

Accuracy	626							0.25% Full Scale Accuracy
	628							1.0% Full Scale Accuracy
Range		-00						0-30″ Hg Vacuum
		-01						30-0-15 psi
		-02						30-0-30 psi
		-03						30-0-45 psi
		-04						30-0-60 psi
		-05						30-0-100 psi
		-06						0-5 psi
		-07						0-15 psi
		-08						0-30 psi
		-09						0-50 psi
		-10						0-100 psi
		-11						0-150 psi
		-12						0-200 psi
		-13						0-300 psi
		-14						0-500 psi
		-15						0-1000 psi
		-16						0-1500 psi
		-17						0-2000 psi
		-18						0-3000 psi
		-19						0-5000 psi
		-26						0-8000 psi
Housing			-CH					Conduit Housing
			-GH					General Purpose Housing
Process Connection				-P1				1/4″ male NPT
				-P2				1/4″ female NPT
				-P3				1/4″ male BSPT
				-P4				1/4″ female BSPT
				-P5				Refrigerant Valve Depressor
Electrical Connection					-E1			Cable Gland with 3' of Prewired Cable
					-E2			Cable Gland with 6' of Prewired Cable
					-E3			Cable Gland with 9' of Prewired Cable
					-E4			DIN Connector Available with -GH Housing Only
					-E5			1/2″ female NPT Conduit Available with -CH Housing Only
					-E6			M-12 4 Pin Connector
Signal Output						-S1		4-20 mA
						-S2		1-5 Volt
						-S3		2-10 Volt
						-S4		0-5 Volt
						-S5		0-10 Volt
						-S6		1-6 Volt
Options							-AT	Aluminum Tag
							-NIST	NIST Traceable Certificate
							-LED	Bright Red LED display. Available with -CH housing only

626 with LED Display (CH housing only)
Note: LED option is not NEMA 4X rated.

Optional -E4 DIN Connector (GH housing only)

Model: 626-07-CH-P1-E1-S1
LED

Series 626 & 628

Industrial Pressure Transmitter

Complete Offering of Ranges, Connections and Outputs

Conduit Housing (-CH)

General Purpose Housing (-GH)

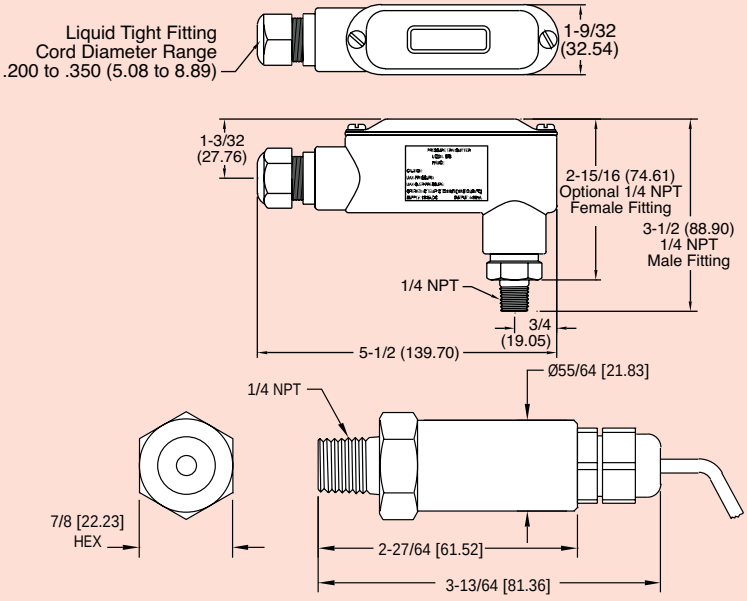

The Series 626 Pressure Transmitters possess a highly precise 0.25% piezo-resistive sensor contained in a compact, rugged, NEMA 4X stainless steel general purpose housing or cast aluminum conduit housing.

The Series 628 Pressure Transmitters are ideal for OEMs with 1% full scale accuracy sensors. The transmitter is also available in the general purpose stainless steel housing and the cast aluminum conduit housing.

The highly corrosive resistant 316L stainless steel wetted parts allow the Series 626 and 628 transmitters to measure the pressure in a multitude of processes from hydraulic oils to chemicals. The Series 626 and 628 are available in ranges of vacuum, compound to 5000 psi with a variety of optional outputs, process connections and electrical terminations to allow you to select the right transmitter for your application.

APPLICATIONS

- Compressors
- Pumping Systems
- Irrigation Equipment
- Hydraulic
- Industrial Process Monitoring

SPECIFICATIONS

Service: Compatible gases and liquids.
Wetted Materials: Type 316 SS, 316L SS.
Accuracy: 626: 0.25% full scale. 628: 1% full scale (includes linearity, hysteresis, and repeatability).
Temperature Limit: 0 to 200°F (-18 to 93°C).
Compensated Temperature Range: 0 to 175°F (-18 to 79°C).
Thermal Effect: 626: ±0.02% FS/°F. 628: ±0.04% FS/°F (includes zero and span).
Pressure Limits: See table.
Power Requirements: 13 to 30 VDC.
Output Signal: 4 to 20 mA. Optional 0-5, 1-5, 0-10, 1-6 or 2-10.
Response Time: 50 msec.
Loop Resistance: 0 - 1300 ohms maximum for current. For voltage outputs, minimum load resistance: 2000 ohms.
Current Consumption: 38 mA (maximum).
Electrical Connections: Conduit Housing (-CH): terminal block, 1/2″ female NPT conduit. General Purpose Housing (-GH): cable, DIN connector or 4 pin M-12.
Process Connection: 1/4″ male or female NPT and BSPT.
Enclosure Rating: NEMA 4X (IP66).
Mounting Orientation: Mount in any position.
Weight: 10 oz (283 g).
Agency Approvals: CE.

PRESSURE LIMITS

Range Number	Pressure Range (psig)	Maximum Pressure (psig)	Over Pressure (psig)	Range Number	Pressure Range (psig)	Maximum Pressure (psig)	Over Pressure (psig)
00	30″ Hg-0	30	150	11	0-150	300	750
01	30-0-15	30	150	12	0-200	400	1000
02	30-0-30	60	300	13	0-300	600	1500
03	30-0-45	100	300	14	0-500	1000	2500
04	30-0-60	200	500	15	0-1000	2000	5000
05	30-0-100	200	500	16	0-1500	3000	5000
06	0-5	10	50	17	0-2000	4000	5000
07	0-15	30	150	18	0-3000	6000	7500
08	0-30	60	300	19	0-5000	7500	10000
09	0-50	100	300	26	0-8000	10000	12000
10	0-100	200	500				

Model: 626-07-GH-P1-E1-S1 LED

MODEL ORDERING CHART

Accuracy	626							
	628							1.0% Full Scale Accuracy
Range		-00						0-30˝ Hg Vacuum
		-01						30-0-15 psi
		-02						30-0-30 psi
		-03						30-0-45 psi
		-04						30-0-60 psi
		-05						30-0-100 psi
		-06						0-5 psi
		-07						0-15 psi
		-08						0-30 psi
		-09						0-50 psi
		-10						0-100 psi
		-11						0-150 psi
		-12						0-200 psi
		-13						0-300 psi
		-14						0-500 psi
		-15						0-1000 psi
		-16						0-1500 psi
		-17						0-2000 psi
		-18						0-3000 psi
		-19						0-5000 psi
		-26						0-8000 psi
Housing			-CH					Conduit Housing
			-GH					General Purpose Housing
Process Connection				-P1				1/4˝ male NPT
				-P2				1/4˝ female NPT
				-P3				1/4˝ male BSPT
				-P4				1/4˝ female BSPT
				-P5				Refrigerant Valve Depressor
Electrical Connection					-E1			Cable Gland with 3' of Prewired Cable
					-E2			Cable Gland with 6' of Prewired Cable
					-E3			Cable Gland with 9' of Prewired Cable
					-E4			DIN Connector Available with -GH Housing Only
					-E5			1/2˝ female NPT Conduit Available with -CH Housing Only
					-E6			M-12 4 Pin Connector
Signal Output						-S1		4-20 mA
						-S2		1-5 Volt
						-S3		2-10 Volt
						-S4		0-5 Volt
						-S5		0-10 Volt
						-S6		1-6 Volt
Options							-AT	Aluminum Tag
							-NIST	NIST Traceable Certificate
							-LED	Bright Red LED display. Available with -CH housing only

626 with LED Display (CH housing only)

Note: LED option is not NEMA 4X rated.

Optional -E4 DIN Connector (GH housing only)

Series 626 & 628 Pressure Transmitters

Specifications - Installation and Operating Instructions

-CH Conduit Housing

-GH General Purpose Housing

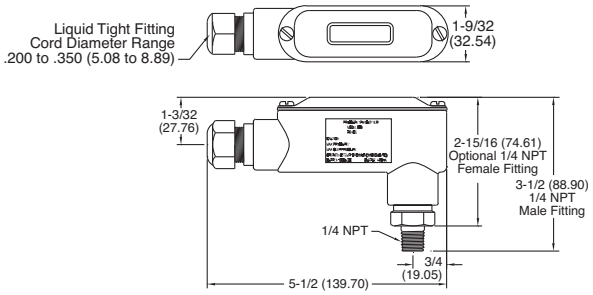

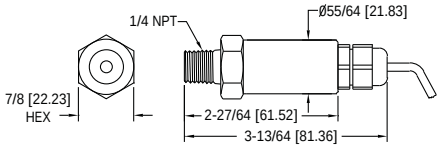

The Series 626 and 628 Pressure Transmitters converts a single positive pressure into a standard 4-20 mA output signal. The Series 626 and 628 can be used to accurately measure compatible gases and liquids; Series 626 full scale accuracy is 0.25%; Series 628 full scale accuracy is 1.0% (see specifications). Designed for industrial environments with a NEMA 4X (IP66) housing, this transmitter resists most effects of shock and vibration.

CAUTION: Do not exceed specified supply voltage ratings. Permanent damage not covered by warranty will result. This device is not designed for 120 or 240 volt AC operation. Use only on 13 to 30 VDC.

Pressure Ranges		
Pressure Range	**Maximum Pressure**	**Over Pressure**
0-15 psia	30 psia	45 psia
15-0 psia	30 psia	45 psia
0-30 psia	60 psia	90 psia
0-50 psia	100 psia	150 psia
0-100 psia	200 psia	300 psia
0-200 psia	400 psia	600 psia
0-300 psia	600 psia	900 psia
0-5 psig	10 psig	50 psig
0-15 psig	30 psig	150 psig
0-30 psig	60 psig	300 psig
0-50 psig	100 psig	300 psig
0-100 psig	200 psig	500 psig
0-150 psig	300 psig	750 psig
0-200 psig	400 psig	1000 psig
0-300 psig	600 psig	1500 psig
0-500 psig	1000 psig	2500 psig
0-1000 psig	2000 psig	5000 psig
0-1500 psig	3000 psig	5000 psig
0-2000 psig	4000 psig	5000 psig
0-3000 psig	6000 psig	7500 psig
0-5000 psig	7500 psig	10000 psig
0-8000 psig	10000 psig	12000 psig

SPECIFICATIONS

Service: Compatible gases and liquids.
Wetted Materials: Type 316 SS.
Accuracy: 626: 0.25% full scale; 626 absolute ranges: 0.5% full scale; 628: 1% full scale. (Includes linearity, hysteresis, and repeatability).
Temperature Limit: 0 to 200°F (-18 to 93°C).
Compensation Temperature Range: 0 to 175° (-18 to 79°C).
Thermal Effect: 626: ±0.02% FS/°F. 628: ±0.04% FS/°F (includes zero and span).
Pressure Limits: See table.
Power Requirements: 13 to 30 VDC.
Output Signal: 4 to 20 mA. Optional 0-5, 1-5 or 0-10.
Response Time: 50 msec.
Loop Resistance: 0-1300 ohms maximum for current. For voltage outputs, minimum load resistance: 2000 ohms.
Current Consumption: 38 mA (maximum).
Electrical Connections: Conduit Housing (-CH): terminal block, 1/2″ female NPT conduit; General Purpose Housing (-GH): cable DIN EN 175801-803-C.
Process Connection: 1/4″ male or female NPT and BSPT.
Enclosure Rating: NEMA 4X (IP66).
Mounting Orientation: Mount in any position.
Weight: 10 oz (283 g).
Agency Approvals: CE.

INSTALLATION

1. Location: Select a location where the temperature of the transmitter will be between 0 and 175°F (-18 to 79°C). Distance from the receiver is limited only by total loop resistance. The tubing or piping supplying pressure to the unit can be practically any length required but long lengths will increase response time slightly.

2. Position: The transmitter is not position sensitive. However all standard models are originally calibrated with the unit in a position with the pressure connection downward. Although they can be used at other angles, for best accuracy it is recommended that units be installed in the position calibrated at the factory.

3. Pressure Connection: Use a small amount of plumber's tape or other suitable sealants to prevent leaks. Be sure the pressure passage inside the port is not blocked.

4. Electrical Connections

Wire Length -The maximum length of wire connecting the transmitter and receiver is a function of wire size and receiver resistance. Wiring should not contribute more than 10% of the receiver resistance to total loop resistance. For extremely long runs (over 1000 feet), choose receivers with higher resistance to minimize the size and cost of connecting leads. Where wiring length is under 100 feet, wire as small as 22 AWG can be used.

CURRENT (4-20 mA) OUTPUT OPERATION

An external power supply delivering 13-30 VDC with minimum current capability of 40 mA DC (per transmitter) is required to power the control loop. See Fig. A for connection of the power supply, transmitter and receiver. The range of appropriate receiver load resistance (R_L) for the DC power supply voltage available is expressed by the formula:

$$R_L \text{ Max} = \frac{Vps - 13}{20 \text{ mA DC}}$$

Shielded cable is recommended for control loop wiring.

DWYER INSTRUMENTS, INC.
P.O. BOX 373 • MICHIGAN CITY, INDIANA 46361, U.S.A.
Phone: 219/879-8000 **www.dwyer-inst.com**
Fax: 219/872-9057 **e-mail: info@dwyer-inst.com**

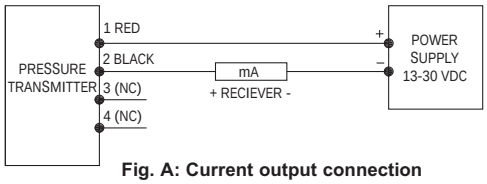

Fig. A: Current output connection

4a. Conduit Housing (-CH) Electrical connections to the pressure transmitters are made to the terminal block located inside the housing. Remove the screws and lift off the cover. Wire as shown in Fig. A, B or C. Use Fig. A for current output connection. Use Fig. B for current output with optional LED display. Use Fig. C for current output with optional LED display using two power supplies.

If ordering optional pre-wired cable, black wire is negative (-) and red wire is positive (+).

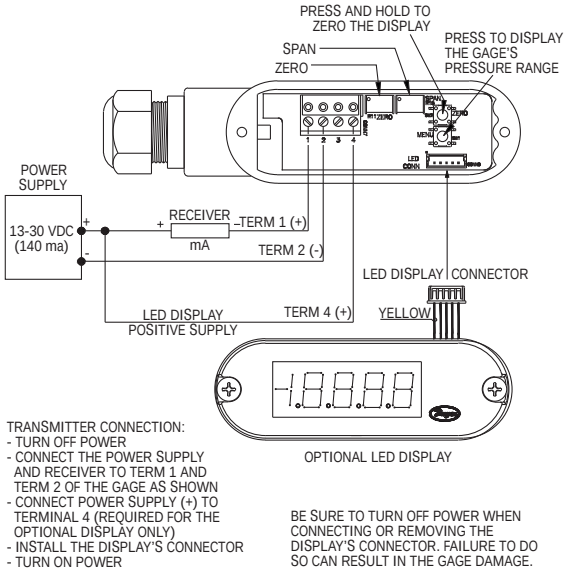

Fig. B: Current output with optional LED display connection

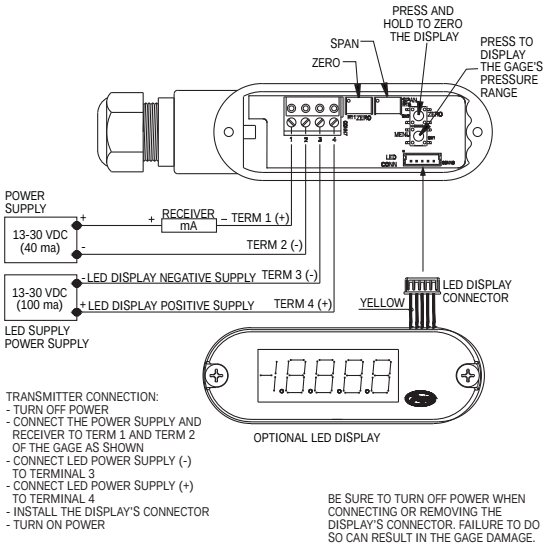

Fig. C: Current output with optional LED display using two power supplies

MAINTENANCE
After final installation of the pressure transmitter and its companion receiver, no routine maintenance is required. A periodic check of system calibration is suggested. The Series 626 and 628 transmitters are not field repairable and should be returned if repair is needed (field repair should not be attempted and may void warranty). Be sure to include a brief description of the problem plus any relevant application notes. Contact customer service to receive a return goods authorization number before shipping.

4b. General Purpose Housing (-GH) When using cable version of -GH General Purpose Housing, black wire is negative (-) and red wire is positive (+). When using optional Heirschman DIN Plug, remove top-center screw and lift off the terminal block assembly. Wire to terminals shown below in Fig. D. For optional 4-pin M-12 connector, wire to pins as shown in Fig. E.

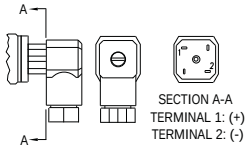

Fig. D

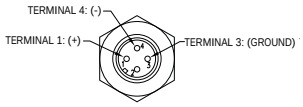

Fig. E

VOLTAGE (0-5, 1-5, 0-10, 1-6 or 2-10 Volt) OUTPUT OPERATION
(Other outputs contact the factory) See Fig. F for connection of the power supply, transmitter and receiver.

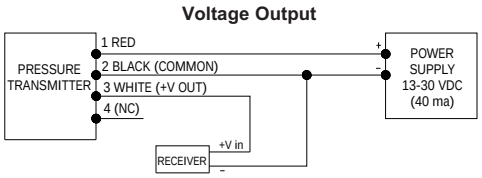

Fig. F: Voltage output connection

4c. Conduit Housing (-CH) Electrical connections to the pressure transmitters are made to the terminal block located inside the housing. Remove the screws and lift off the cover. Wire as shown in Fig. F or Fig. G. Use Fig. F for voltage output connection. Use Fig. G for voltage output with optional LED display connection. If ordering optional pre-wired cable, black wire is negative (-), red wire is positive (+) and white wire is +Vout.

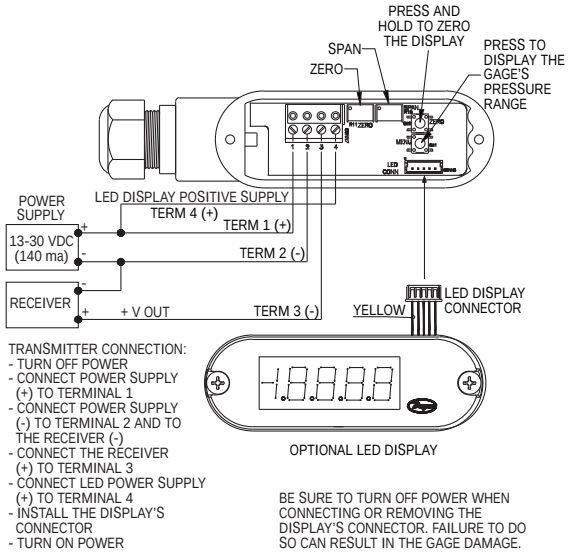

Fig. G: Voltage output with optional LED display connection

4d. General Purpose Housing (-GH) When using cable version of -GH General Purpose Housing, black wire is negative (-), red wire is positive (+) and white wire is output. When using optional Heirschman DIN Plug, remove top-center screw and lift off the terminal block assembly. Wire to terminals shown below in Fig. H. For optional 4-pin M-12 connector, wire to pins as shown in Fig. I. If utilizing optional A-164 cable for M-12 connection, brown wire corresponds to pin #1, white #2, blue #3, and black #4.

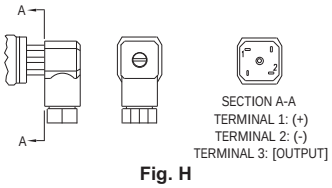

Fig. H

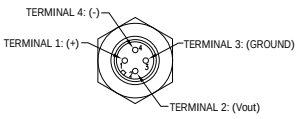

Fig. I

©Copyright 2010 Dwyer Instruments, Inc.
Printed in U.S.A. 11/10
FR# 01-443271-00 Rev.13

DWYER INSTRUMENTS, INC.
P.O. BOX 373 • MICHIGAN CITY, INDIANA 46361, U.S.A.
Phone: 219/879-8000 **www.dwyer-inst.com**
Fax: 219/872-9057 **e-mail: info@dwyer-inst.com**

ASHCROFT®

Type K1 Thin Film Pressure Transducer/Transmitter

Model: K1-7M02-42-F2 - 0-30" Hg

APPLICATIONS:

Hydraulic, refrigeration, machine tool, test/measurement, pump control, HVAC, medical, construction equipment and all general purpose industrial process applications

BENEFITS & FEATURES:

- ***0.5% and 1.0% accuracy***
- ***Vac.-2000 psi pressure range***
- ***FM approved and UL listed***
- ***Superior long-term stability and repeatability***
- ***Stainless steel NEMA 4X enclosure***
- ***Current/voltage output***
- ***Wide range of electrical connections available***

The Ashcroft® K1 transmitter introduces the benefits of polysilicon thin film performance at affordable prices. Modern low-pressure chemical vapor deposition methods provide simple, stable molecular bonds between a proven metal diaphragm and a polysilicon strain gage bridge. There are no epoxies or bonding agents to contribute to signal instability or drift.

The integral metal diaphragm and polysilicon bridge are virtually unaffected by shock, vibration or mounting.

These transmitters are offered in many standard pressure ranges with either current or voltage output signals. Transmitter performance is directly traceable to the National Institute of Standards and Technology and specifications are conservatively stated. A calibration test certificate is available with each transmitter.

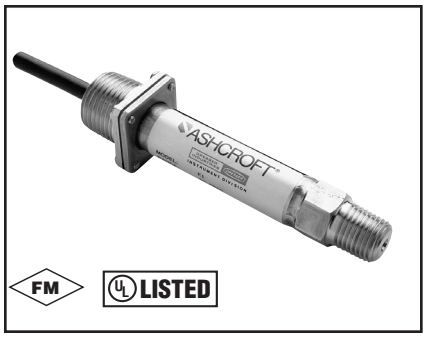

PERFORMANCE CHARACTERISTICS

Standard Ranges (psi)

0/15*	0/300	0/5000*	vac./60*
0/30*	0/500	0/7500*	vac./45*
0/60*	0/750	0/10,000*	vac./30*
0/100	0/1000	0/15,000*	vac./15*
0/150	0/2000	0/20,000*	vac./0*
0/200	0/3000		

*1% accuracy ranges only.
Consult factory for nonstandard ranges.

Accuracy Class (F.S.): (Using T.P. method)	0.5%	1%
Best fit straight line (BFSL)	±0.25	±0.4
Hysteresis	±0.15	±0.2
Nonrepeatability	±0.05	±0.07
Interchangeability	±0.5%	±1.0%

Durability:
10^8 cycles 20/80%F.S. with negligible performance change

Stability: ±0.5% F.S./yr

ENVIRONMENTAL CHARACTERISTICS

Temperature Limits:

Storage:	–65 to +250°F
Operating:	–20 to +180°F
Compensated Range:	–20 to +160°F

Thermal Coefficients: (68°F ref.) %F.S./°F
Standard:

	0.5%	1%
ZERO	±0.028%	±0.04%
SPAN	±0.028%	±0.04%

Optional:

ZERO	±0.014%	N/A
SPAN	±0.014%	N/A

Multiply thermal zero coefficients by 1.5 on 0/30 psi, vac/15 range and by 3 on 0/15 and vac/0 ranges

Humidity:
No performance effect at 95% relative humidity-noncondensing

FUNCTIONAL CHARACTERISTICS

Overpressure Limits (F.S.):

	0/15-0/2000	0/3000-0/5000	0/7500-20,000
Proof	200%	150%	120%
Burst	800%	300%	150%

Vibration Sweep:
Less than ±0.1%F.S. effect for 0-2000 Hz at 20 g's in any axis

Shock: Less than ±0.05% F.S. effect for 100 g's, 20ms shock in any axis

Position Effect: Less than 0.01% F.S.

ELECTRICAL SPECIFICATIONS

Output Signal:
4-20mA (2 wire)
1-5 Vdc (3 wire)
1-6 Vdc (3 wire)
1-11 Vdc (3 wire) (minimum excitation 15 Vdc)

Power Requirements:
10-36 Vdc unregulated

Response Time: Less than 5 ms

Reverse Polarity Protected

Supply Current: <3mA for voltage outut

PHYSICAL CHARACTERISTICS

Enclosure: NEMA 4X (NEMA 1 only if <500 psig if electrical termination is Bendix® or Hirschman®)

Weight: 2 oz. (approx. w/o cable)

MATERIALS:

Case: 300 series stainless steel

Cable: No. 24 AWG, 36˝ PVC, shielded, vented, UL approved

Diaphragm: 17-4 PH stainless steel

Standard Process Connections: (316 stainless steel)
1/8 NPT male or female
1/4 NPT male or female
1/4 SAE-J-514 (male)
1/4 AMINCO (female) required for pressures over 10,000 psi
Other connections available

HAZARDOUS LOCATION CERTIFICATIONS

(Available optional on 0.5% model only)
Factory Mutual FM approvals
Intrinsically Safe for use in:
Class I, II, III, Div. 1, Groups A, B, C,D, F, G when used with safety barriers connected in accordance with Dresser drawing 71B212 Sht (1-3).
Nonincendive for:
Class I, Div. 2, Groups A, B, C, D
Special Protection for:
Class II, III, Div. 2, Group F, G

TO ORDER THIS TYPE K1 TRANSDUCER/TRANSMITTER:

Select: K 1 ☐ ☐☐☐ ☐☐ ☐☐ ☐☐☐☐☐☐ ☐☐☐

1. Type Configuration (K1)

2. Accuracy/TC
~~**(3)** 0.50%, ±0.014%/°F~~ ~~**(5)** 0.50%, ±0.028%/°F~~
(7) 1.0%, ±0.040%/°F

3. Pressure Connection
(M01) 1/8 NPT ~~**(M1)** **(F01)** 1/8 NPT-F~~ **(M02)** 1/4 NPT-M **(F02)** 1/4 NPT-F
~~**(MEK)** 7/16-20 M~~ ~~**(F09)** AMINCO 9/16-18 Female~~

4. Output Signal
(42) 4-20mA ~~**(15)** 1/5 Vdc~~ ~~**(16)** 1/6 Vdc~~ ~~**(11)** 1/11 Vdc~~

5. Electrical Termination
(F2) 36˝ cable, shielded, PVC sheathing ~~**(B4)** Bendix 4-pin # PT02A-8-4P*~~ ~~**(HM)** Hirschmann miniature~~
~~**(B6)** Bendix 6-pin # PT02A-10-6P*~~ ~~**(B8)** WP Bendix 4-pin # PT02E-8-4P*~~
(B9) WP Bendix 6-pin # PT02E-10-6P* **(C1)** 1/2 NPT-M Conduit w/36˝ Cable

6. Pressure Range
(Vac./0) Vac./0 through **(20000)** 20,000 psi (see standard ranges). Call for more options.

7. Optional X-Variations
(XFM) FM Approval Option

*Mating connector available as necessary

Reference Bulletin PT-1

Consult factory for guidance in product selection
Phone (203) 783-6650, FAX (203) 783-6659 or
visit our web site at www.ashcroft.com

DRESSER
Measurement

K1, K2, K8
PRESSURE TRANSDUCER INSTRUCTION SHEET

ASHCROFT®

⚠ WARNING! READ ⚠ BEFORE INSTALLATION

1. GENERAL:

A failure resulting in injury or damage may be caused by excessive overpressure, excessive vibration or pressure pulsation, excessive instrument temperature, corrosion of the pressure containing parts, or other misuse. Consult Ashcroft Inc., Stratford, Connecticut, USA before installing if there are any questions or concerns.

2. OVERPRESSURE:

Pressure spikes in excess of the rated overpressure capability of the transducer may cause irreversible electrical and/or mechanical damage to the pressure measuring and containing elements.

Fluid hammer and surges can destroy any pressure transducer and must always be avoided. A pressure snubber should be installed to eliminate the damaging hammer effects. Fluid hammer occurs when a liquid flow is suddenly stopped, as with quick closing solenoid valves. Surges occur when flow is suddenly begun, as when a pump is turned on at full power or a valve is quickly opened.

Liquid surges are particularly damaging to pressure transducers if the pipe is originally empty. To avoid damaging surges, fluid lines should remain full (if possible), pumps should be brought up to power slowly, and valves opened slowly. To avoid damage from both fluid hammer and surges, a surge chamber should be installed.

Symptoms of fluid hammer and surge's damaging effects:

- Pressure transducer exhibits an output at zero pressure (large zero offset).
- Pressure transducer output remains constant regardless of pressure
- In severe cases, there will be no output.

FREEZING:

Prohibit freezing of media in pressure port. Unit should be drained (mount in vertical position with electrical termination upward) to prevent possible overpressure damage from frozen media.

3. STATIC ELECTRICAL CHARGES:

Any electrical device may be susceptible to damage when exposed to static electrical charges. To avoid damage to the transducer observe the following:

- Operator/installer should follow proper ESD (electrostatic discharge) protection procedures before handling the pressure transducer.

Note: The shield and drain wire in the cable (if supplied) is not connected to the transducer body, and is not a suitable ground.

MOUNTING

The transducer requires no special mounting hardware, and can be mounted in any plane with negligible position error.

Although the unit can withstand normal vibration without damage or significant output effects, it is always good practice to mount the transducer where there is minimum vibration.

For units with NPT type pressure fittings apply teflon tape or an equivalent sealant to the threads before installing.

When tightening, apply a wrench to the hex wrench flats located just above the pressure fitting. **DO NOT** tighten by using a pipe wrench on the housing.

POWER SUPPLY – K1 Models Only

The supply voltage for the 1-5 and 1-6 Vdc output transducers must be within the range of 10 to 36 Vdc. The maximum supply voltage for a 4-20mA current output transducer is 36 Vdc while the minimum supply voltage is dependent upon the loop resistance of the circuit. The load limitation chart shows the minimum supply voltage (V_{min}) required for a given loop resistance (R_{LOOP}).

NOISE

For minimum noise susceptibility, avoid running the transducer's cable in a conduit that contains high current AC power cables. Where possible avoid running the cable near inductive equipment.

SHIELD WIRING

Connect the braided shield to the guard terminal on the reading instrument (meter, etc.) if available or to ground or to the power supply negative terminal.

ADJUSTMENT POTENTIOMETERS

The zero and span pots are accessible through the top of the case. Loosen the four screws and separate the top carefully. The zero pot is marked with a white dot.

VENT TUBE

The cable will have a clear Teflon vent tube that's required at pressure below 500 psi to provide atmospheric reference. The open end should be placed in a dry area.

OUTPUT – K8 Only

Sensitivity may be from 6 mV/V to 18 mV/V for any individual transducer. Zero offset is within ±3 mV/V. Output is proportional to supply voltage (ratiometric).

EXCITATION – K8 & K2

For proper operation a voltage within the range of 5 to 10 Vdc must be applied between the transducer's supply terminals.

Load Limitations 4-20mA Output Only

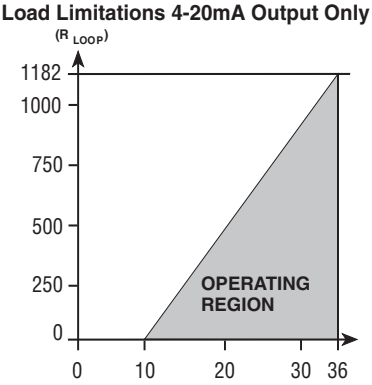

$V_{min} = 10V + (.022A \times R_L)$

$R_L = R_S + R_W$

R_L = Loop Resistance (ohms)

R_S = Sense Resistance (ohms)

R_W = Wire Resistance (ohms)

© 2011 Ashcroft Inc., 250 East Main Street, Stratford, CT 06614, USA. Tel: 203-378-8281 • Fax: 203-378-0499, All specifications are subject to change without notice.
All sales subject to standard terms and conditions. All rights reserved. www.ashcroft.com. I&M011-10063-1/01 (250-2924). Rev. A 5/11

K1, K2, K8
PRESSURE TRANSDUCER INSTRUCTION SHEET

ASHCROFT®

Wiring Diagrams for All Transducers

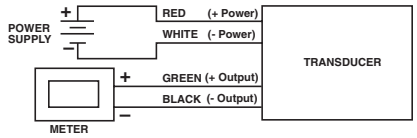

4-Wire Ratiometric (mV/V)

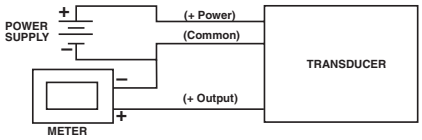

3-Wire Voltage

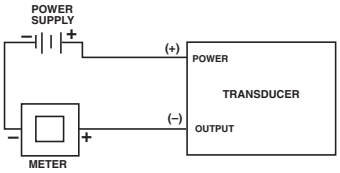

4-20 mA

Dimensions

NOTE: All dimensions are decimal inches

K1, K2 Transducers

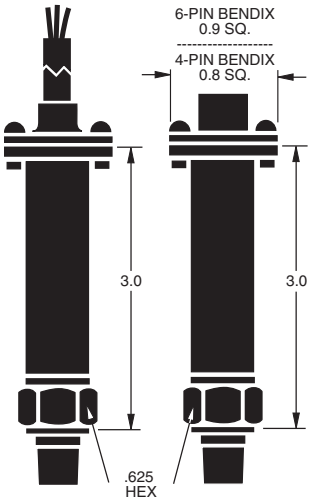

K8 Transducers

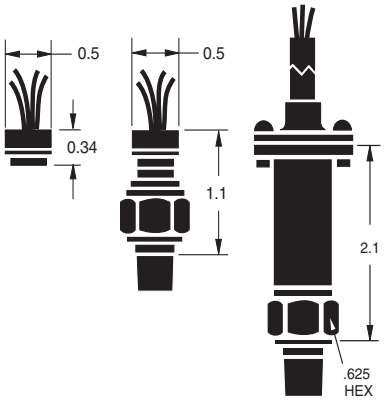

K1 Transducers – Electrical Connections

Voltage Output Units 1-5, 1-6 Vdc

	CONNECTOR TYPE	MATING CONNECTOR CABLE CODING
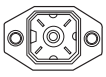	**Hirschmann Type** PIN 1 = + Power PIN 2 = Common PIN 4 = Output	 Red Black Green
	Bendix 4-Pin, 6-Pin Pin A = + Power Pin B = Output Pin D = Common	 Red Green White
	Cable Type F2 Red = + Power White = Common Green = Output	 N/A
	Cable Type C1 Red = + Power White = Common Green = Output	 N/A

Current Output Units 4-20mA

	CONNECTOR TYPE	MATING CONNECTOR CABLE CODING
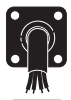	**Cable Type F2** Red = + Power Black = – Power	 N/A
	Cable Type C1 Red = + Power Black = – Power	 N/A
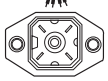	**Hirschmann Type** Pin-1 = + Power Pin-2 = – Power	 Red Black
	Bendix 4-Pin, 6-Pin Pin A = + Power Pin B = – Power	 Red Green

K2 Transducers – Electrical Connections

Ratiometric (mV/V)

	CONNECTOR TYPE	MATING CONNECTOR CABLE CODING
	Cable Type F2 Red = + Power White = – Power Green = + Output Black = – Output	 N/A
	Cable Type C1 Red = + Power White = – Power Green = + Output Black = – Output	 N/A
	Bendix 4-Pin Pin A = +Power Pin B = +Output Pin C = – Output Pin D = – Power	 Red Green Black White
	Bendix 6-Pin Pin A = +Power Pin D = – Power Pin B = +Output Pin C = – Output Pin E = Shunt Cal. Pin F = Shunt Cal.	 Red White Green Black

K8 Transducers – Electrical Connections

Ratiometric (mV/V)

Cable Type F2
Red = + Power
White = – Power
Green = + Output
Black = – Output

4 Inch Leads
Red* = + Power
White = – Power
Green = + Output
Blue = – Output
*Orange = + Power, RoHS compliant versions

Special Wiring – See "X" Variation On Unit Label

Variation	Wire Hookup	
XTQ	Red =	+ Power
	Black =	Common
	White =	Output
XTG	Red =	+ Power
	Black =	Common
	Green =	Output

Recalibration Instructions:

1. **Apply 0% Full Scale Pressure.**
2. **Set the output using the *Zero adjustment potentiometer*.**
3. **Apply 100% Full Scale Pressure.**
4. **Set the output using the *Span adjustment potentiometer*.**
5. **Repeat steps 1 thru 4 as necessary.**

© 2011 Ashcroft Inc., 250 East Main Street, Stratford, CT 06614, USA. Tel: 203-378-8281 • Fax: 203-378-0499, All specifications are subject to change without notice.
All sales subject to standard terms and conditions. All rights reserved. www.ashcroft.com. I&M011-10063-1/01 (250-2924). Rev. A 5/11

Sub Section 5B – Temperature Devices

- Dwyer Model RRT225OU Enclosure Interior High Temperature Switch Specifications - Installation & Operating Instructions
- Pyromation Model R1T185L 48 3-012-8HN 71 T, SVE Manifold Temperature Transmitter Specifications
- Pyromation Model R1T185L 48 3-006-00-8HN 71, Air Sparge Temperature Transmitter Specifications
- Pyromation Series 440 Temperature Transmitter Installation & Operating Instructions

Series RRT Remote Reading Thermometer

Specifications – Installation and Operating Instructions

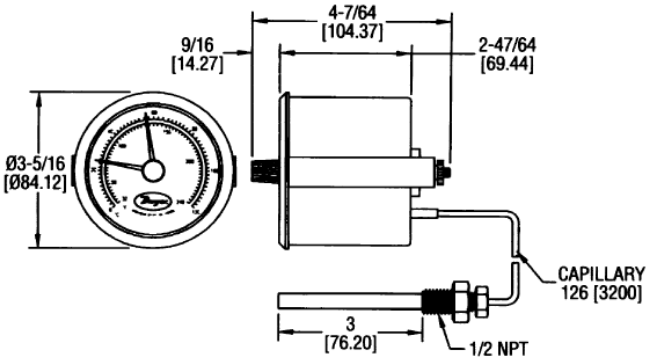

The Series RRT Remote Reading Thermometer is a liquid actuated temperature controller with SPST snap switch output. A change in the temperature triggers a change in the volume of the liquid-filled system. A bourdon tube converts the volume change into a rotary movement of the indicating pointer. The rotation of the indicating temperature pointer operates the single pole single throw snap switch as it passes the set point needle. The switch set point is fully adjustable across the entire temperature range.

Series RRT Model Numbers

Model Number	Temperature Range (Dual Scale)
RRT2120U	-40 to 120°F (-40 to 50°C)
RRT2250U	32 to 248°F (0 to 120°C)

PHYSICAL DATA

Dial Size: 3¼" (80 mm) **Accuracy:** ±2% of full scale.
Thermal Effect (Includes Span and Zero): ±1.5% of span per 100°F (55°C) nominal.
Ambient Operating Temperature: -4 to 158°F (-20 to 70°C)
Max. Over Temperature Protection: ±15% of full scale.
Switch Type, Rating: SPST, 5A @ 250 VAC, non-inductive.
Mounting: U-clamp panel mount, 3 7/32" (82 mm) cutout.
Process Connection: ½" NPT(M)
Electrical Connections: Three ¼" male quick connects.
Capillary Length: 10.5 feet (3.2 meters)**Bulb Length:** 3.0" (76 mm)
Wetted Parts: Brass. **Weight:** 0.77 lbs. (350 g).

MECHANICAL INSTALLATION

The Series RRT Remote Reading Thermometer can be mounted in any position. Select a clean, dry location, free from vibrations and extreme temperatures. Do not directly expose the unit to corrosive media.

The unit includes a U-clamp mounting bracket to make panel mounting simple and easy. Cut a 3 7/32" (82 mm) diameter hole in the panel. Remove the U-clamp bracket prior to inserting into panel. Insert the unit into the panel cutout from the front. Place the U-clamp bracket on the back of the unit and secure into place by finger tightening the knurled nuts. NOTE: If panel thickness exceeds 13/64" (5 mm), the U-clamp bracket must be shortened accordingly.

The probe should be mounted so the bulb is fully immersed in the media and where the temperature of the media will be evenly distributed.

Temperature effects along the capillary are compensated for with a bi-metallic element. The capillary should not be located close to sources of hot or cold. Care should be taken when arranging the capillary. A sharp bend or break in the capillary. can cause the unit to fail. Minimum bending radius is 13/64" (5 mm).

ELECTRICAL CONNECTIONS

CAUTION: Do not exceed the specified electrical ratings shown on the unit. Permanent damage, not covered by the warranty will result. Connections for the single pole single throw output are made via three male quick connects. The quick connect terminals are numerically labeled 1, 2, and 3. Quick connect 1 is the common terminal. For NC (normally closed) operation, make switch connections using terminals 1 and 2. For NO (normally open) operation, use terminals 1 and 3.

OPERATION

The switch setpoint is fully adjustable across the entire range of the unit. The unit is equipped with internal stops at the minimum and maximum values of a specified range. Adjust the setpoint by rotating the black knob on the front of the dial case to the desired temperature setting.

MAINTENANCE

After final installation and setpoint adjustment of the series RRT Remote Reading Thermometer, no routine maintenance is required. Periodic checks of connections and setpoints is recommended. Units are not field serviceable and should be returned to the factory, freight prepaid, if repair is necessary. Be sure to include a complete description of the application and problem.

©Copyright 1995, Dwyer Instruments, Inc.

RTD

Single and Duplex Element RTDs

The RTD elements illustrated and described on this page are designed to measure temperature in a variety of process and laboratory applications. These RTDs are specifically designed for use in two different process temperature ranges and will provide accurate and repeatable temperature measurement through a broad range. Low range RTDs are constructed using Teflon® insulated silver plated copper internal leads, with potting compounds to resist moisture penetration. High range RTDs are constructed with nickel internal leads inside swaged MgO insulated cable to allow higher temperature measurements at the RTD element and to provide higher temperature lead protection along the sheath. The following tables allow customer selection of standard element materials, initial accuracies, sheath materials and diameters, mounting fittings and terminations. Custom built assemblies with non-standard specifications are available upon request.

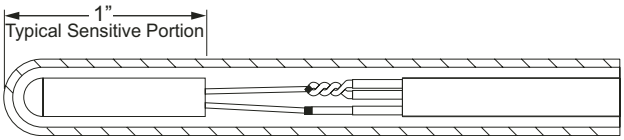

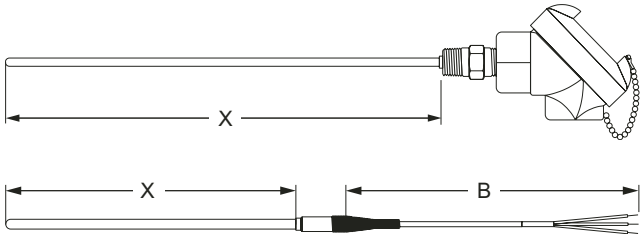

ORDER CODES

Example Order Number:

1-1	1-2	1-3		1-4								
R5T185L	48	3	-	006	-	Page RTD-2	-	Page RTD-3	or	Page RTD-4	-	Page RTD-5	-	Page RTD-6

1-1 Single Platinum RTD Elements / **1-2 Available Sheath Diameters 316SS**

CODE	INITIAL ELEMENT ACCURACY @ 0 °C	BASE RESISTANCE @ 0 °C	TEMPERATURE COEFFICIENT	CODE			
LOW RANGE WIRE WOUND (-200 TO 204) °C				*1/8” OD*	*3/16” OD*	*1/4” OD*	*3/8” OD*
R1T185L	± 0.1%	100 Ω	$\alpha = 0.003\ 85\ °C^{-1}$	28	38	48	68
R3T185L	± 0.03%	100 Ω	$\alpha = 0.003\ 85\ °C^{-1}$	28	38	48	68
R5T185L	± 0.01%	100 Ω	$\alpha = 0.003\ 85\ °C^{-1}$	28	38	48	68
R1T192L	± 0.1%	100 Ω	$\alpha = 0.003\ 92\ °C^{-1}$	28	38	48	68
R3T192L	± 0.03%	100 Ω	$\alpha = 0.003\ 92\ °C^{-1}$	28	38	48	68
R1T125L	± 0.1%	200 Ω	$\alpha = 0.003\ 85\ °C^{-1}$	N/A	38	48	68
LOW RANGE THIN FILM (-40 TO 204) °C							
RBF185L	± 0.12%	100 Ω	$\alpha = 0.003\ 85\ °C^{-1}$	28	38	48	68
RAF185L	± 0.06%	100 Ω	$\alpha = 0.003\ 85\ °C^{-1}$	28	38	48	68
RBF155L	± 0.12%	500 Ω	$\alpha = 0.003\ 85\ °C^{-1}$	28	38	48	68
RBF195L	± 0.12%	1000 Ω	$\alpha = 0.003\ 85\ °C^{-1}$	28	38	48	68
HIGH RANGE WIRE WOUND (-200 TO 600) °C							
R1T185H	± 0.1%	100 Ω	$\alpha = 0.003\ 85\ °C^{-1}$	28	38	48	68
R1T192H	± 0.1%	100 Ω	$\alpha = 0.003\ 92\ °C^{-1}$	28	38	48	68

1-4 Length

CODE
3 Digit ‘X’ Length

1-3 Element Wire

CODE	DESCRIPTION
2	2 wire per element
3	3 wire per element
4	4 wire per element

1-1 Duplex Platinum RTD Elements / **1-2 Available Sheath Diameters 316SS**

CODE	INITIAL ELEMENT ACCURACY @ 0 °C	BASE RESISTANCE @ 0 °C	TEMPERATURE COEFFICIENT	CODE		
LOW RANGE WIRE WOUND (-200 TO 204) °C				*3/16” OD*	*1/4” OD*	*3/8” OD*
R1T285L	± 0.1%	100 Ω	$\alpha = 0.003\ 85\ °C^{-1}$	38	48	68
R3T285L	± 0.03%	100 Ω	$\alpha = 0.003\ 85\ °C^{-1}$	38	48	68
R5T285L	± 0.01%	100 Ω	$\alpha = 0.003\ 85\ °C^{-1}$	38	48	68
R1T292L	± 0.1%	100 Ω	$\alpha = 0.003\ 92\ °C^{-1}$	38	48	68
R3T292L	± 0.03%	100 Ω	$\alpha = 0.003\ 92\ °C^{-1}$	38	48	68
LOW RANGE THIN FILM (-40 TO 204) °C						
RBF285L	± 0.12%	100 Ω	$\alpha = 0.003\ 85\ °C^{-1}$	38	48	68
RAF285L	± 0.06%	100 Ω	$\alpha = 0.003\ 85\ °C^{-1}$	38	48	68
RBF295L	± 0.12%	100 Ω	$\alpha = 0.003\ 85\ °C^{-1}$	38	48	68
HIGH RANGE WIRE WOUND (-200 TO 600) °C						
R1T285H	± 0.1%	100 Ω	$\alpha = 0.003\ 85\ °C^{-1}$	38	48	68
R1T292H	± 0.1%	100 Ω	$\alpha = 0.003\ 92\ °C^{-1}$	38	48	68
Consult factory for other RTD types.						

1-2A

CODE	NOMINAL SHEATH DIA.	TIP DIA.	TIP LENGTH
88R48	1/2” OD	1/4” OD	1 1/4” OD
68R38	3/8” OD	3/16” OD	1 1/4” OD
68R28	3/8” OD	1/8” OD	1 1/4” OD
48R38	1/4” OD	3/16” OD	1 1/4” OD

REDUCED TIP RTD’s

Table 1-2A lists RTD elements with reduced tip sheaths. To order, use order code numbers from Tbl. 1-2A in place of straight sheath order code numbers from Tbl. 1-2. Other reduced tips are available upon request. EXAMPLE: R1T185L**68R483**-006.

Pyro MATION, INC.®
© Copyright 2005 Pyromation, Inc., All Rights Reserved.

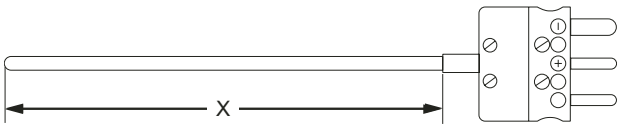

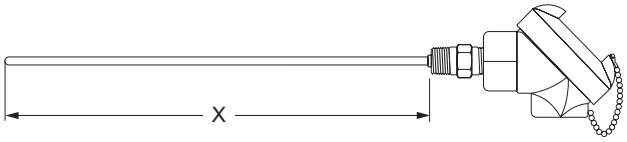

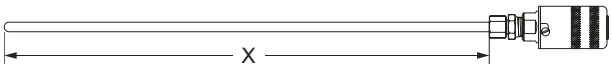

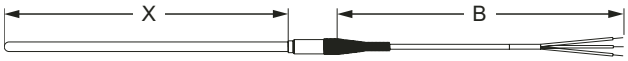

ORDER CODES

Example Order Number:

	3-1A	3-2A	3-3A		
R5T185L483-006-00 -	**8HN**	**31,**	**I**	**or**	SEE RTD-4 FOR SHEATH TERMINATIONS AND LEADWIRE TRANSITION OPTIONS

3-1A Head Mounting Fittings For Standard Heads

For head terminations, a head mounting fitting must be selected

CODE	DESCRIPTION
6HN	1/2” x 1/2” NPT steel hex nipple
8HN	1/2” x 1/2” NPT stainless steel hex nipple
9HP	1/2” NPT stainless steel bushing (no process threads)
8RNDC	3/4” process x 1/2” NPT stainless steel hex nipple
22CF	Brass compression fitting (not available with head termination order codes 71, 72, 81, 82)

Head Mounting Fittings For Miniature Heads Options 17 & 25

CODE	DESCRIPTION
8HPB	1/4” NPT stainless steel bushing (no process threads)
9HNB	1/4” x 1/4” NPT stainless steel hex nipple
22CF	Brass compression fitting

3-2A Standard Head Terminations

CODE	DESCRIPTION
31	Aluminum screw cover head
34	Cast iron screw cover head
49	Flip top aluminum head
53	Grey delrin screw cover head
62	White DIN form B polypropylene head
63	White polypropylene head
69	Flip-top polypropylene head
71	Cast iron/aluminum explosion proof head class C
72	DIN form B aluminum explosion proof head class B
81	316L stainless steel explosion proof head class C
82	DIN form B 316 stainless steel expolsion proof head class B
91	316L stainless steel head
92	DIN form B 316 stainless steel head

3-2A Miniature Head Terminations

CODE	DESCRIPTION
17	Miniature plastic head
25	Miniature nickel plated head

3-2A Hex Fitting Termination Option Without Connection Heads

CODE	DESCRIPTION
22	3” individual Teflon® leads with terminal pins - 12” maximum leads
23	Extension lead wire beyond hex (requires table 5 & 6 selections)

3-3A Standard Head Options

CODE	DESCRIPTION
BX	Box connector
CG	Nylon cord grip
CT	Ceramic terminal block
GS	Ground screw
I	Stainless steel tag
NB	1/2” NPT nylon conduit reducer bushing
SB	1/2” NPT plated steel conduit reducer bushing
T	Head-mounted transmitter (see instrument section)
W*	Epoxy coated aluminum

*Available with option 31 only.

© Copyright 2005 Pyromation, Inc., All Rights Reserved.

The Series 440 programmable RTD temperature transmitter is a 2-wire transmitter with an analog output. It has measurement input for Pt100 resistance thermometers (RTD) in 2- or 3-wire connections. Setting up of the transmitter is done using the communication cable. These small units can be mounted in Pyromation connection heads or they can be used for surface mounting by using a 35 mm DIN-rail mounting clip.

TEMPERATURE HEAD TRANSMITTER

Universal head transmitter for Pt100 resistance thermometers (RTD), programmable using a PC, for installation in a sensor head.

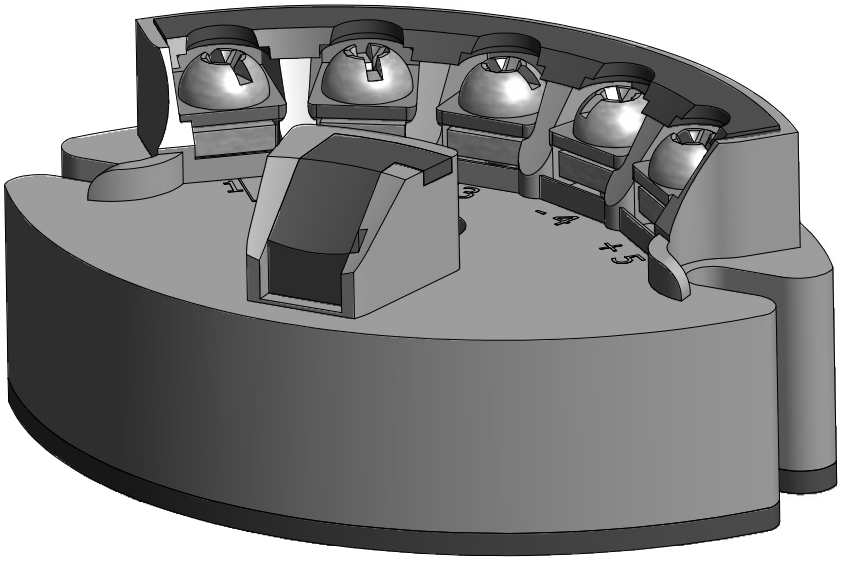

Patent #D350, 596

Application Areas

- PC programmable temperature head transmitter for converting Pt100 input signal into an scaleable (4 to 20) mA analog output signal
- Platinum resistance thermometer (RTD)
- Online configuration using PC with SETUP connector.

Features and Benefits

- Universally PC programmable for Pt100 signals
- 2-wire technology, (4 to 20) mA analog output
- High accuracy in total ambient temperature range
- Fault signal on sensor break or short circuit
- RFI/EMI Protected, CE marked
- c UL us Recognized Component
- FM CSA General Purpose and non-incendive for use in hazardous locations
- Online configuration during measurement using SETUP connector
- Output simulation

© 2006 Pyromation, Inc.

Phone (260) 484-2580 • FAX (260) 482-6805 or (800) 837-6805 • www.pyromation.com

ORDER CODES

Unconfigured Order Number: **440-00**[1]

Example Configured Order Number:

4 4 0	-	1 3	2 85	3 U	-	4 S (50-300)	5 F

1

CODE	DESCRIPTION
~~2~~	~~RTD (2-wire)~~
3	RTD (3-wire)

2

CODE	DESCRIPTION
85	100 ohm platinum (α = 0.003 85 °C^{-1})

[1] Default setting for unconfigured transmitter is 3-wire Pt100 (0 -100)°C.

3

CODE	DESCRIPTION
U	Upscale Burnout ≥ 21.0 mA
D	Downscale Burnout ≤ 3.6 mA

4

RANGE	
S (lower limit – upper limit)	0 - 300

5

CODE	DESCRIPTION
C	Celsius
F	Fahrenheit

Accessories

CODE	DESCRIPTION
10303	Communication Cable and Software (USB)
10307	35 mm DIN-rail mounting clip

© 2006 Pyromation, Inc.

Copyright© 2001. Pyromation, Inc. All rights reserved.

The single element RTDs illustrated and described on this and the following pages are designed to measure temperature in a variety of process and laboratory applications. These RTDs are specifically designed for use in two different process temperature ranges and they will provide accurate and repeatable temperature measurement through a broad range of -328° to 1112°F (-200° to 600°C). Low range wirewound RTDs -328° to 400°F (-200° to 204°C) and low range thin film RTDs -40° to 400°F (-40° to 204°C) are constructed using silver plated copper internal leads, teflon, and other suitable wire insulations with potting compounds to resist moisture penetration. High range RTDs -328° to 1112°F (-200° to 600°C) are constructed with nickel internal leads inside swaged MgO insulated cable to allow higher temperature measurements at the RTD element and to provide higher temperature lead protection along the sheath. The following tables allow customer selection of standard element materials, initial accuracies, sheath materials and diameters, mounting fittings and terminations. Custom built assemblies with non-standard specifications are available upon request.

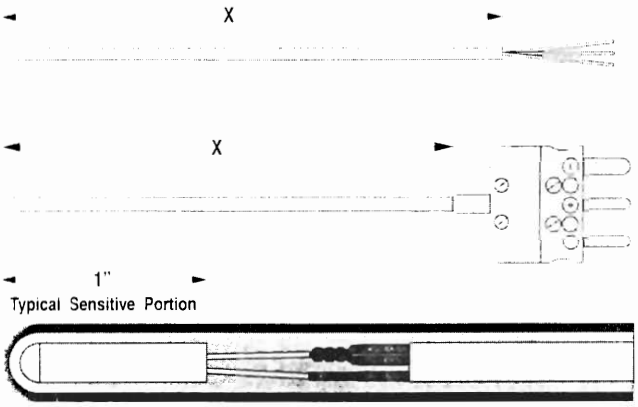

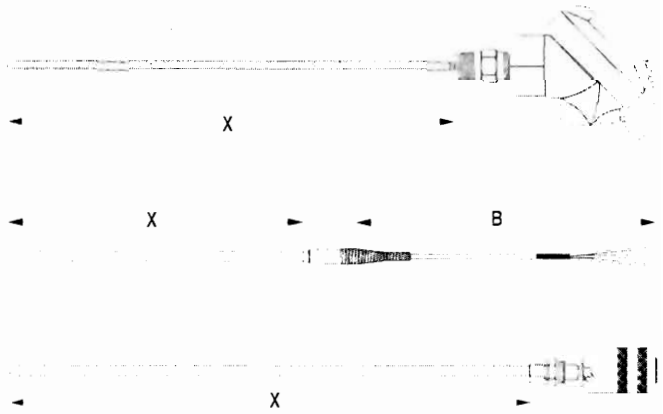

Example Order Number:

1-1	1-2	1-3		1-4
R5T185L	48	3	-	006

1-1

SINGLE PLATINUM RTD ELEMENTS						316 SS SHEATH			
ELEMENT ACCURACY @ 0° C				SPECS		DIAMETERS			
± .1%	± .03%	± .01%	± .12%	VALUE IN OHMS	TEMP. COEF.	1/8" OD	3/16" OD	1/4" OD	3/8" OD
ORDER CODE	ORDER CODE	ORDER CODE	ORDER CODE			ORDER CODE	ORDER CODE	ORDER CODE	ORDER CODE
Low Range -328 to 400°F (-200 to 204°C)									
R1T185L	R3T185L	R5T185L	RBF185L	100	.00385	28	38	48	68
R1T192L	R3T192L			100	.00392	28	38	48	68
R1T125L				200	.00385	28	38	48	68
			RBF155L	500	.00385	28	38	48	68
			RBF195L	1000	.00385	28	38	48	68
High Range -328 to 1112°F (-200 to 600°C)									
R1T185H				100	.00385	28	38	48	68
R1T192H				100	.00392	28	38	48	68
			RBF155H	500	.00385		38	48	68
			RBF195H	1000	.00385		38	48	68

SINGLE COPPER, NICKEL, NICKEL-IRON RTD ELEMENTS					316 SS SHEATH			
ACCURACY @ 0° C		ELEMENT MATERIAL	SPECS		DIAMETERS			
± .2%	± .5%		VALUE IN OHMS	TEMP. COEF.	1/8" OD	3/16" OD	1/4" OD	3/8" OD
ORDER CODE	ORDER CODE				ORDER CODE	ORDER CODE	ORDER CODE	ORDER CODE
Low Range -328 to 400°F (-200 to 204°C)								
RCT110L		Copper	10	.00427	28	38	48	68
	RDT112L	Nickel	120	.00672	28	38	48	68
	RDT164L	Nickel - Iron	604	.00518		38	48	68

Note: R1T191 has been changed to R1T192 to reflect a change to ITS-90 temperature scale

1-4

LENGTH
ORDER CODE
3 DIGIT 'X' LENGTH
- 006

1-3

ELEMENT WIRE	
ORDER CODE	DESCRIPTION
2	2 wire per element
3	3 wire per element
4	4 wire per element

1-2A

ORDER CODE	Nominal Sheath Dia.	Tip Dia.	Tip Length	Material
88R48	1/2" OD	1/4" OD	1 1/4"	316 SS
68R48	3/8" OD	1/4" OD	1 1/4"	316 SS
68R38	3/8" OD	3/16" OD	1 1/4"	316 SS
68R28	3/8" OD	1/8" OD	1 1/4"	316 SS
48R38	1/4" OD	3/16" OD	1 1/4"	316 SS
48R28	1/4" OD	1/8" OD	1 1/4"	316 SS

REDUCED TIP RTD's

Table 1-2A lists RTD elements with reduced tip sheaths. To order, use order code numbers from Tbl. 1-2A in place of straight sheath order code numbers from Tbl. 1-2. Other reduced tips are available upon request. Example: R1T185L68R483-006

Pyromation Inc.
Phone (260) 484-2580 • FAX (800) 837-6805

Copyright© 2001, Pyromation, Inc. All rights reserved.

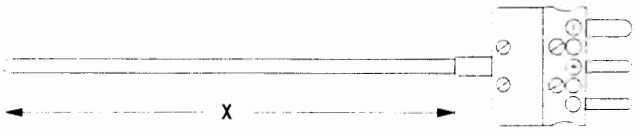

EXAMPLE ORDER NUMBERS: R5T185L483 - 006 - 00 - 6HN (3-1) 31 (3-2) OR R5T185L483 - 006 - 01A,304 - 16 (3-1)

3-1

HEAD MOUNTING FITTINGS FOR STANDARD HEADS

For head terminations, a head mounting fitting must be selected

ORDER CODE	DESCRIPTION
6HN	1/2" x 1/2" NPT steel hex nipple
8HN	1/2" x 1/2" NPT stainless steel hex nipple
8HP	1/2" NPT stainless steel bushing (no process threads)
8RNDC	3/4" process x 1/2" NPT stainless steel hex nipple
22CF	Brass compression fitting (not available with head termination order codes 52, 71, or 81)

HEAD MOUNTING FITTINGS FOR MINIATURE HEADS

ORDER CODE	DESCRIPTION
8HPB	1/4" NPT stainless steel bushing (no process threads)
9HNB	1/4" x 1/4" NPT stainless steel hex nipple
22CFB	Brass compression fitting

3-2

STANDARD HEAD TERMINATIONS

ORDER CODE	DESCRIPTION
22	No head - 3" individual leads with terminal pins
23	Extension leadwire (requires Table 4 and 5 selections)
31	Cast aluminum screw cover head
34	Cast iron screw cover head
49	Flip top aluminum head
52	Class B explosion proof head
53	Delrin screw cover head
63	Polypropylene screw cover head
71	Cast iron/aluminum explosion proof head
81	316L stainless steel explosion proof head
91	316L stainless steel head
OPTIONS	
CT	Ceramic terminal block (opt. 53 and 63 only)
GS	Ground screw (standard with opt. 52, 71, 81)
I	Stainless steel tag (supply tag information)
SB	1/2"NPT conduit reducer bushing
T	Transmitter (see INS-1 thru 5)
W	White epoxy coating

MINIATURE HEAD TERMINATIONS

ORDER CODE	DESCRIPTION
14	Ceramic Wafer head (not available in high temp construction)
17	Miniature plastic head
25	Miniature nickel plated head

3-1

LEADWIRE TRANSITIONS (Requires Tbl. 4 and 5 selections)

ORDER CODE	DESCRIPTION
22	3" individual leads with terminal pins
15	Extension leadwire transition with relief spring (400°F)
16	Extension leadwire transition with heat shrink tubing (220°F)
13	Same size transition with heat shrink tubing (220°F) Note 1
18	Same size transition without heat shrink tubing (400°F) Note 1
19	Extension leadwire transition without spring or heat shrink (400°F)

The temperature rating for the transition is for the epoxy. Individual lead selection might alter maximum rating.

OPTIONS	
HT Note 2	High temperature potting (1000°F) not available with option 13 or option 16

PLUG AND JACK TERMINATIONS

ORDER CODE	DESCRIPTION
4	Standard male plug (350°F)
5	Standard female jack (350°F)
6	Miniature male plug (350°F)
7	Miniature female jack (350°F)
OPTIONS	
MC	Mating connector
CL	Compression L bracket to hold plug to sheath

Note 1: 1/8" sheath diameter limited to wire code T3J, T3 or K3

Note 2: Not available with teflon or PVC insulated leadwire

Pyromation Inc.
Phone (260) 484-2580 · FAX (800) 837-6805

The Series 440 programmable RTD temperature transmitter is a 2-wire transmitter with an analog output. It has measurement input for Pt100 resistance thermometers (RTD) in 2- or 3-wire connections. Setting up of the transmitter is done using the communication cable. These small units can be mounted in Pyromation connection heads or they can be used for surface mounting by using a 35 mm DIN-rail mounting clip.

TEMPERATURE HEAD TRANSMITTER

Universal head transmitter for Pt100 resistance thermometers (RTD), programmable using a PC, for installation in a sensor head.

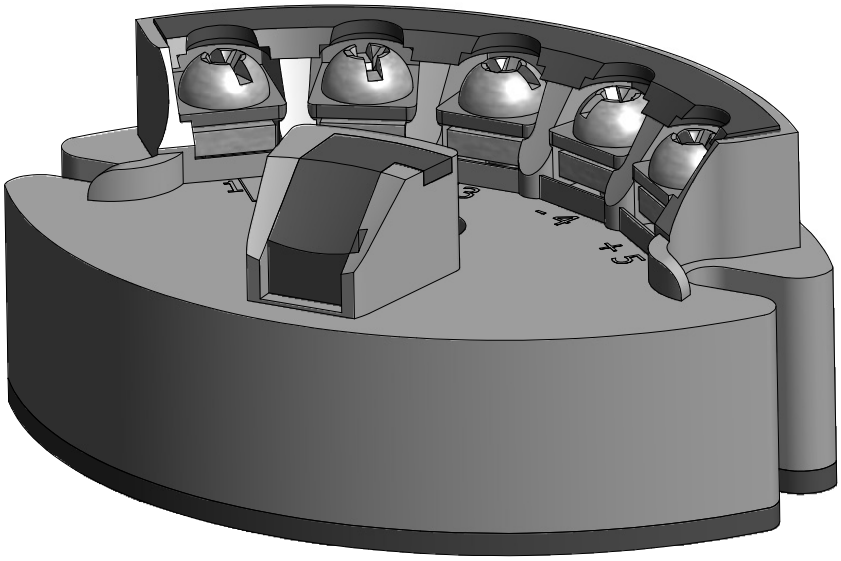

Patent #D350, 596

Application Areas

- PC programmable temperature head transmitter for converting Pt100 input signal into an scaleable (4 to 20) mA analog output signal
- Platinum resistance thermometer (RTD)
- Online configuration using PC with SETUP connector.

Features and Benefits

- Universally PC programmable for Pt100 signals
- 2-wire technology, (4 to 20) mA analog output
- High accuracy in total ambient temperature range
- Fault signal on sensor break or short circuit
- RFI/EMI Protected, CE marked
- c UL us Recognized Component
- FM CSA General Purpose and non-incendive for use in hazardous locations
- Online configuration during measurement using SETUP connector
- Output simulation

© 2006 Pyromation, Inc.

Phone (260) 484-2580 • FAX (260) 482-6805 or (800) 837-6805 • www.pyromation.com

ORDER CODES

Unconfigured Order Number: **440-00**[1]

Example Configured Order Number:

4 4 0	-	1 3	2 85	3 U	-	4 S (50-300)	5 F

1

CODE	DESCRIPTION
2	RTD (2-wire)
3	RTD (3-wire)

2

CODE	DESCRIPTION
85	100 ohm platinum (α = 0.003 85 °C^{-1})

[1] Default setting for unconfigured transmitter is 3-wire Pt100 (0 -100)°C.

3

CODE	DESCRIPTION
U	Upscale Burnout ≥ 21.0 mA
D	Downscale Burnout ≤ 3.6 mA

4

RANGE	
S (lower limit – upper limit)	0 - 300

5

CODE	DESCRIPTION
C	Celsius
F	Fahrenheit

Accessories

CODE	DESCRIPTION
10303	Communication Cable and Software (USB)
10307	35 mm DIN-rail mounting clip

© 2006 Pyromation, Inc.

Series 440 Installation and Operating Instructions

1 SAFETY NOTES

Safe and secure operation of the head transmitter can only be guaranteed if the operating instructions and all safety notes contained are understood and followed.

1.1 Correct Use

The unit is a universal, presettable temperature transmitter for resistance thermometer (RTD). The unit is constructed for mounting in a connection head and a field housing. The manufacturer cannot be held responsible for damage caused by misuse of the unit.

1.2 Installation, commissioning and operation

The unit is constructed using the most up-to-date production equipment and complies with the safety requirements of the EU guidelines. If it is installed incorrectly or is misused, certain application dangers can occur. Trained personnel must do installation, wiring, and maintenance of the unit. These personnel must have read and understood these instructions and must follow them to the letter.

2 FUNCTION AND SYSTEM CONSTRUCTION

2.1 Function

Provides electronic monitoring of input signals into an analog output signal in industrial temperature measurement. The head transmitter is mounted in a connection head or separated from the sensor in a field housing. Setting up of the head transmitter is done using PC and configuration software. The configuration kit is required for setting up the head transmitter.

2.2 Measurement system

Transforming the following input signals:
• Resistance thermometers (RTD) (in 2 or 3 wire connection systems)

Fault monitoring of:
• Measurement range override or undercut
• Sensor breakage and short circuit

3 INSTALLATION

3.1 Installation conditions

Ambient temperature: (-40 to 85) °C [-40 to 185] °F
Installation area: Field housing; connection head
Installation angle: No limit

Safety notes: The unit must only be powered by a power supply that operates using an IEC 61010-1 compliant energy limited circuit.

3.2 Installation

• Feed the sensor leadwires through the central hole in the head transmitter
• Position the head transmitter in the connection head
• Feed the installation screws through the slots in the head transmitter.
• Screw the head transmitter into the field housing using a screwdriver while not over tightening.

4 WIRING

4.1 Overview

Terminal layout

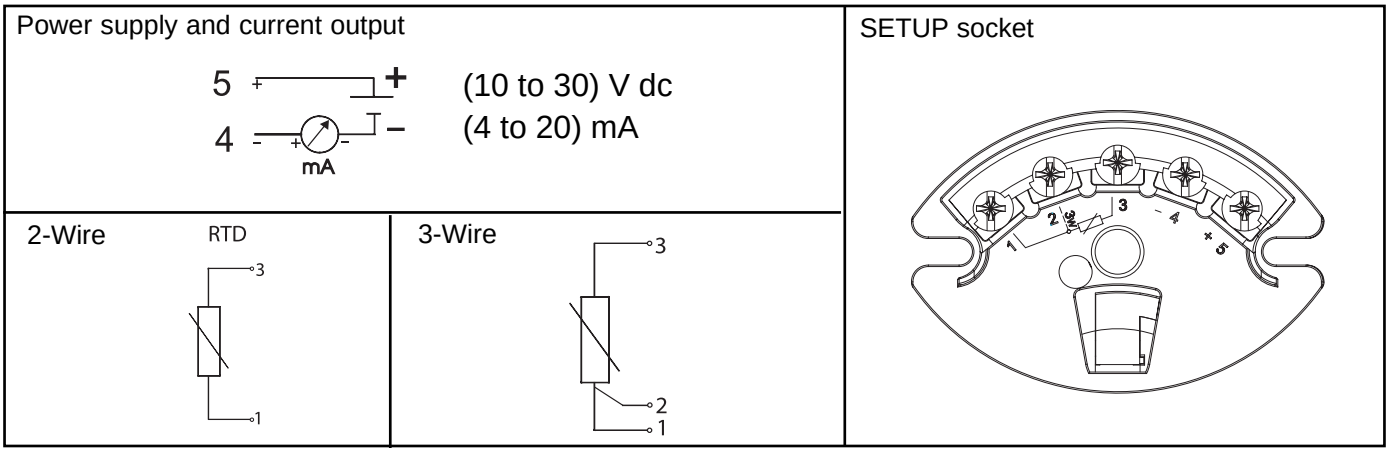

© Copyright 2006 Pyromation, Inc., All Rights Reserved.

4.2 Measurement unit connection

Attention: Switch off power supply before opening the housing cover. Do not install or connect the unit to mains power. If this is not followed parts of the electronic circuit will be damaged.

• Sensors:
Connect the sensor leads to the respective head transmitter terminals (Terminals 1 to 3) by following the wiring diagram (see figure 4.1).

• Output signal and power supply:
Open the PG cable gland on the head transmitter or field housing. Feed the cable through the opening in the PG cable gland and then connect the cable cores to terminals 4 and 5 according to the wiring diagram (see figure 4.1).

• PC configuration (SETUP socket):
Open the flap on the SETUP socket (Figure 4.1) and connect the SETUP connection cable.

Hint: The screws on the terminals must be screwed tightly. Head transmitter configuration during measurement operation is possible. There is no need to disconnect leads.

Potential leveling
Please take note when installing the head transmitter remotely in a field housing. The screen on the (4 to 20) mA signal output must have the same potential as the screen at the sensor connections. When using earthed thermocouples, screening of the output (4 to 20) mA cable is recommended. In plants with strong electromagnetic fields, screening of all cables with a low ohm connection to the transmitter housing is recommended.

5 OPERATION

5.1 Short form instructions (SETUP)

PRESETTABLE PARAMETERS	
Standard settings	• Sensor type • Connection mode (2 or 3 wire connection) • Units (°C or °F) • Measurement range start (depends on sensor) • Measurement range end (depends on sensor)
Expanded settings	• Compensation resistance (0 to 20) □ on 2 wire connection • Fault condition reaction (≤ 3.6 mA or ≥ 21.0 mA) • Output (analog standard/inverse) • Damping (0 to 8) s • Offset (-9.9 to +9.9) ˚C [-17.8 to +17.8] ˚F • Measurement point identification/TAG Service functions
Service functions	• Simulation (on/off)

For detailed TransComm operating instructions, please read the online documentation contained in the software.

5.2 Communication

The head transmitter must be set up using a PC and configuration kit. The following points must be taken into account if trouble free setting up is to be achieved:
• Configuration software installation.
• Connect the head transmitter to the PC using the connection cable from the configuration kit.

CONFIGURATION SOFTWARE INSTALLATION	
System conditions	• IBM PC or compatible computer (minimum Pentium 166 MHz) • Windows 95/98/ME/NT4.0/2000 • 64 MB RAM • Minimum 30 MB free memory on hard drive • CD-ROM drive • Screen resolution 800 x 600 Pixel • Free serial interface
Recommended minimum configuration	• Pentium 400 MHz • 128 MB main RAM • 120 MB free hard drive memory • Screen resolution 1024 x 768 Pixel
Installation start	Start Windows 1. Place installations-CD in the respective drive 2. Start “Setup.exe” and follow the installation instructions 3. If required, the help/operating manual can be printed once the software has been successfully installed.

© Copyright 2004 Pyromation, Inc., All Rights Reserved.

Connecting the head transmitter to the PC using the configuration kit connection cable

1. Connect the SETUP connector of the interface cable to the SETUP socket in the head transmitter (see figure 4.1).

2. Connect the RS232C connector to a free serial interface socket on the PC. In order to achieve optimum connection, tighten the RS232C connector screws to the PC.

Note: Configuration of the head transmitter can be done with or without power applied.

6 COMMISSIONING

6.1 Installation check

Monitor all connections making sure they are tight. In order to guarantee fault free operation, the terminal screws must be tight onto the connection cables. The unit is now ready for operation.

6.2 Commissioning

Once the power supply has been connected the head transmitter is operational.

Set up using the PC configuration software

The head transmitter left the factory with a default parameter configuration. If no customer specific configuration was mentioned on the order the default parameter configuration is constructed as follows:

Sensor	Pt100 (RTD)
Connection mode	3-wire
Measurement range and units	(0 to 100) °C

Hint: If a change has been made to the measurement point the head transmitter can be re-configured. In order to re-configure the parameters follow these instructions:

- Install the configuration software and make connection to the PC (see Chapter 5, Operation).
- For detailed operating instructions for the PC configuration software, please read the online documentation contained in the software.

Interactive setting up of the temperature transmitter

Customer specific linearization and sensor matching is done using the TransComm configuration software. The program calculates the linearization coefficients X0 to X4, that need to be entered into the PC configuration software.

6.3 Function check

Measuring the analogue (4 to 20) mA output signal or following failure signals:

Measurement range undercut	Linear fall to 3.8 mA
Measurement range excess	Linear rise to 20.5 mA
Sensor break; sensor short circuit	≤ 3.6 mA or ≥ 21.0 mA selectable

7 MAINTENANCE

The head transmitter is maintenance free.

8 FAULT FINDING

8.1 Repair concept and disposal

Due to its construction, the head transmitter cannot be repaired. When disposing of the head transmitter please take note of local disposal regulations.

8.2 Faultfinding and repairs

Trouble shooting in general

FAULT	CAUSE	ACTION/CURE
No communication	2 wire connection incorrect	Re-connect correctly (see connection diagram)
	No power supply to the 2 wire connection	Check the current loop
	Power supply too low (< 10 V dc)	Check power supply
	Interface cable defective	Check the interface cable
	PC-interface defective	Check the interface of your PC
	Head transmitter defective	Replace head transmitter

© Copyright 2004 Pyromation, Inc., All Rights Reserved.

Trouble shooting on RTDs (Pt100)

FAULT	CAUSE	ACTION/CURE
Current (≤ 3.6 or ≥ 21.0) mA	Sensor defective	Check sensor
	Incorrect RTD connection	Connect the cables correctly (see connection diagram)
	Incorrect 2 wire connection	Connect the cables correctly (see connection diagram)(Polarity)
	No power supply on the 2 wire connection	Check the current loop; the supply should be > 10 V dc
	Incorrect transmitter programming (number of wires)	Change parameter ‘connection mode’ (see chap. Operation)
	Programming	Thermocouple set up (see chap. Operation). Change to RTD
	Head transmitter defective	Replace head transmitter
Incorrect or inaccurate measured value	Sensor is incorrectly installed	Reinstall sensor correctly
	Heat dissipation via sensor	Monitor sensor installation positioning
	Incorrect transmitter programming (number of wires)	Change parameter ‘connection mode’
	Transmitter programming faulty (scale)	Change scale
	Wrong RTD set up	Change parameter ‘sensor type’
	Sensor connection (2 wire)	Monitor sensor connection
	Sensor cable resistance not compensated (2 wire)	Compensate cable resistance
	Offset incorrectly set up	Monitor offset

© Copyright 2004 Pyromation, Inc., All Rights Reserved.

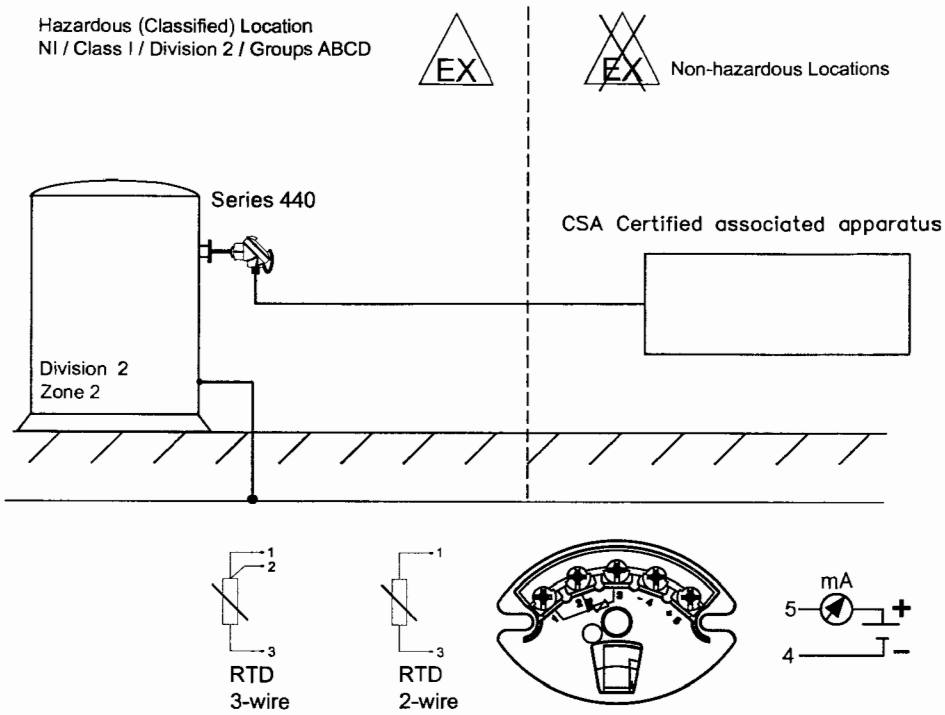

Temperature Range

T4 (-40 to 85) °C
T5 (-40 to 65) °C
T6 (-40 to 50) °C

Installation Notes Series 440 Transmitter

-The head transmitter must be installed in accordance with this control drawing and Article 504 and 505 of NEC and Section 18 of CEC as applicable.
-The spacing between intrinsically safe and non intrinsically safe circuits is at least 50 mm.
-Use supply wires suitable for 5 °C above.
-The configuration of the Series 440 transmitter is only permitted in non hazardous locations.
-To prevent ignition of explosive atmospheres, disconnect power before servicing.
-The device must be installed in a suitable enclosure.
Warning: Substitution of components may impair suitability for Class I, Division 2.

NONINCENDIVE **NI Class I / Division 2 / Groups ABCD**

-Depending on location install per National Electrical Code (NEC) using wiring methods described in Article 500 through Article 510 and Section 18 of CEC.
-The Series 440 transmitter and RTD sensor are to be installed in Class I, Division 2 location.
-Intrinsic safety barrier not required. Vmax ≤ 30 V dc
-Warning: Do not disconnect equipment unless power has been switched off or the area is known to be nonhazardous.

-Nonincendive field wiring installation
The Nonincendive Field Wiring Circuit Concept allows interconnection of Nonincendive Field Wiring Apparatus with Associated nonincendive Field Wiring Apparatus or Associated Intrinically Safe Apparatus or Associated Apparatus not specifically examined in combination as a system using any of the wiring methods permitted for unclassified locations, when Voc ≤ Vmax, Ca ≥ Ci + Ccable, La ≥ Li + Lcable.
Transmitter Nonincendive Field Wiring parameters are as follows:
Ui or Vmax ≤ 30 V dc Ci ≤ 144 nF Li ≤ 0
For these current controlled circuits, the parameter Imax is not required and need not to be aligned with parameter Isc and It of the Associated Nonincendive Field Wiring Apparatus or Associated Apparatus.

FUNCTIONAL RATINGS
-These ratings do not supersede Hazardous Location values:
Unom < 35 V dc Inom = (4 to 20) mA

			PART NO:	FOR: PYROMATION, INC
			SPEC NO:	TITLE: SERIES 440 CSA CONTROL DRAWING
			TOLERANCES	SIZE: A / DWG. NO: M0074 / SHEET: 01 / REV. B
			FRACTION DIM = ±1/16"	SCALE: N/A / DATE: 01/09/05
			DECIMAL DIM .XX = ±0.010"	
			DECIMAL DIM .XXX = ±0.005"	
			ANGULAR DIM = ±2°	PyroMATION®, INC.
△	REVISION	DATE	Copyright© 2006	FORT WAYNE, INDIANA 260-484-2580

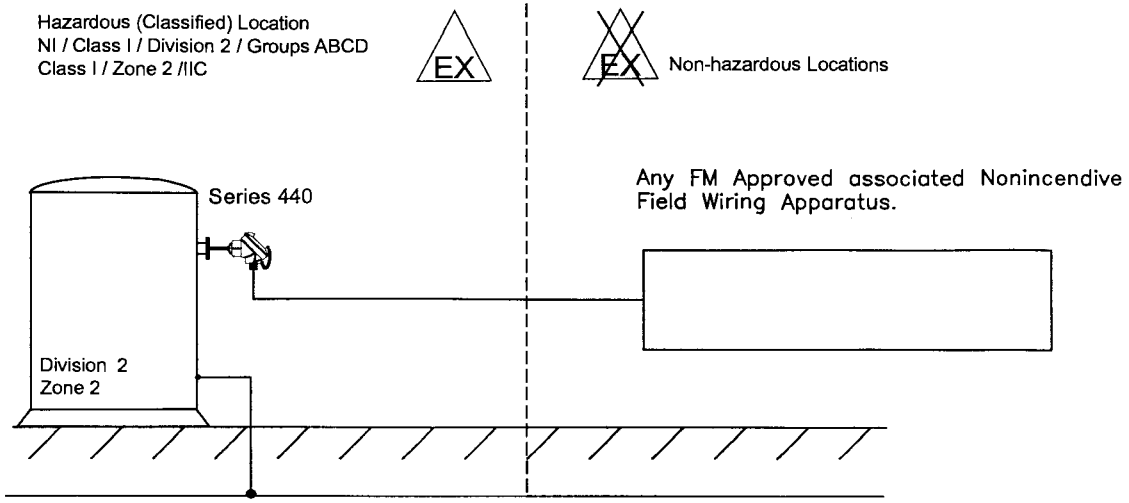

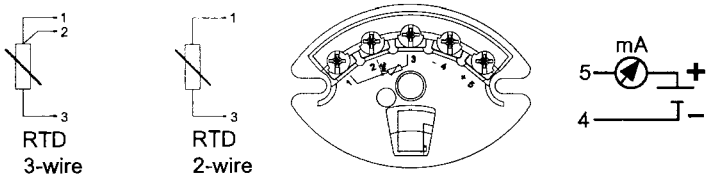

Temperature Range

T4 (-40 to 85) °C
T5 (-40 to 65) °C
T6 (-40 to 50) °C

FM APPROVED

Installation Notes Series 440 Transmitter

-FM Approved Apparatus must be installed in accordance with manufacturer's instructions.
-The spacing between intrinsically safe and non-intrinsically safe circuits is at least 50 mm.
-Use supply wires suitable for 5 °C above.
-The configuration of the Series 440 transmitter is only permitted in non hazardous locations.
-To prevent ignition of explosive atmospheres, disconnect power before servicing.
-The device must be installed in a suitable enclosure.
-The transmitter 440 and RTD Sensor is to be installed in Class I, Division 2 location.
Warning: Substitution of components may impair suitability for Class I, Division 2.

NONINCENDIVE **NI Class I / Division 2 / Groups ABCD**

-Depending on location install per National Electrical Code (NEC) using wiring methods described in Article 500 through Article 510.
-Intrinsic safety barrier not required. Vmax ≤ 30 V dc
-Warning: Do not disconnect equipment unless power has been switched off or the area is known to be nonhazardous.

-Nonincendive field wiring installation
The Nonincendive Field Wiring Circuit Concept allows interconnection of Nonincendive Field Wiring Apparatus with Associated Nonincendive Field Wiring Apparatus or Associated Intrinsically Safe Apparatus or Associated Apparatus not specifically examined in combination as a system using any of the wiring methods permitted for unclassified locations, when
Voc ≤ Vmax, Ca ≥ Ci + Ccable, La ≥ Li + Lcable.
Transmitter Nonincendive Field Wiring parameters are as follows:
Ui or Vmax ≤ 30 V dc Ci ≤ 144 nF Li ≤ 0
For these current controlled circuits, the parameter Imax is not required and need not to be aligned with parameter Isc and It of the Associated Nonincendive Field Wiring Apparatus or Associated Apparatus.

FUNCTIONAL RATINGS
These ratings do not supersede Hazardous Location values:
Unom < 35 V dc, Inom ≤ (4 to 20) mA

			PART NO:	FOR: PYROMATION, INC
			SPEC NO:	TITLE: SERIES 440 FM CONTROL DRAWING
			TOLERANCES	SIZE: A / DWG. NO: M0074 / SHEET: 02 / REV. A
			FRACTION DIM = ±1/16"	SCALE: N/A / DATE: 07/06/06
			DECIMAL DIM .XX = ±0.010"	
			DECIMAL DIM .XXX = ±0.005"	
			ANGULAR DIM =	PyroMATION®, INC.
△	REVISION	DATE	Copyright© 2006	FORT WAYNE, INDIANA 260-484-2580

Sub Section 5C – Flow Devices

- Dwyer Model 2003-MP Air Sparge Flow Meter Specifications (FM-901 & FM-1001)
- Dwyer Model 2003 SVE Manifold Flow Meter Specifications (FM-001)
- Dwyer Model 2005 SVE Flow Meter Specifications (FM-102, FM-202 & FM-302)
- Dwyer Model 2002 SVE Flow Meter Specifications (FM-101, FM-201 & FM-301)
- Dwyer Magnehelic Series 2000 Differential Pressure Gauge Operating Instructions
- Dwyer Model DS-300-6 Air Sparge & SVE Flow Element Specifications (FM-910 & FM-1001; FM-102, FM-202 & FM-302)
- Dwyer Model DS-300-8 Air Sparge, SVE & Vapor Discharge Manifold Flow Element Specifications (FM-101, FM-201 & FM-301; FM-401; FM-2001)
- Dwyer Series DS-300 Flow Element Installation & Operating Instructions
- Dwyer Model MS-111-LCD Air Sparge Air Flow Transmitter Specifications (FM-2001)
- Dwyer Model MS-131-LCD Soil Vapor Extraction System Discharge Manifold Air Flow Transmitter Specifications (FM-401)
- Dwyer Series MS Air Flow Transmitter Installation & Operating Instructions
- Dwyer Model V4-2-U SVE & Air Sparge Flow Switch Specifications (FS-101, FS-201 & FS-301; FS-901 & FS-1001)
- Dwyer Series V4 Flow Switch Installation & Operating Instructions
- Dwyer Model DS-400-12 SVE Manifold Flow Element Specifications (FM-001)
- Dwyer Series DS-400 Flow Element Installation & Operating Instructions
- Istec Model 1810 Bag Filter Effluent, Water Flow Totalizer Specifications
- Istec Series 1800 Flow Totalizer Installation Instructions
- Delta P (IWC) vs. Flow Rate (SCFM) Graph - DS-400 - FM-001
- Delta P (IWC) vs. Flow Rate (SCFM) Graph - DS-300 - FM-101, FM-201 & FM-301
- Delta P (IWC) vs. Flow Rate (SCFM) Graph - DS-300 - FM-102, FM-202 & FM-302
- Delta P (IWC) vs. Flow Rate (SCFM) Graph - DS-300 - FM-901 & FM-1001
- Delta P (IWC) vs. Flow Rate (SCFM) Graph - DS-300 - FIA-401
- Delta P (IWC) vs. Flow Rate (SCFM) Graph - DS-300 - FIA-2001

Series 2000

Magnehelic® Differential Pressure Gages

Indicate positive, negative or differential. Accurate within 2%.

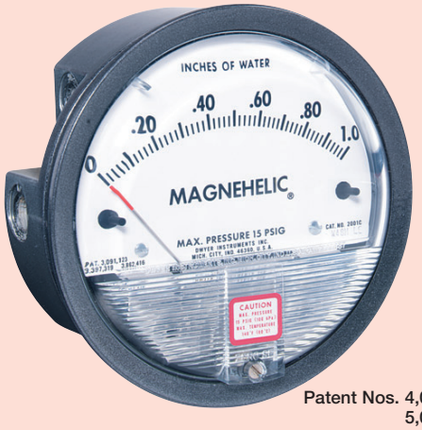

Patent Nos. 4,030,365
5,012,678

Standard Magnehelic® Pressure Gage has a large, easy-to-read 4" dial.

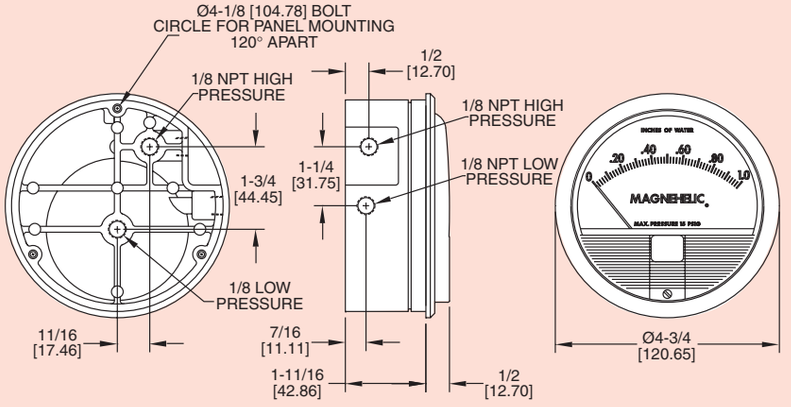

Dimensions, Standard Series 2000 Magnehelic® Pressure Gages. (Slightly different on medium and high pressure models)

Select the Dwyer Magnehelic® gage for high accuracy – guaranteed within 2% of full scale – and for the wide choice of 81 models available to suit your needs precisely. Using Dwyer's simple, frictionless Magnehelic® movement, it quickly indicates low air or non-corrosive gas pressures – either positive, negative (vacuum) or differential. The design resists shock, vibration and over-pressures. No manometer fluid to evaporate, freeze or cause toxic or leveling problems. It's inexpensive, too.

The Magnehelic® is the industry standard to measure fan and blower pressures, filter resistance, air velocity, furnace draft, pressure drop across orifice plates, liquid levels with bubbler systems and pressures in fluid amplifier or fluidic systems. It also checks gas-air ratio controls and automatic valves, and monitors blood and respiratory pressures in medical care equipment.

NOTE: Do Not use with Hydrogen gas. Dangerous reactions will occur.

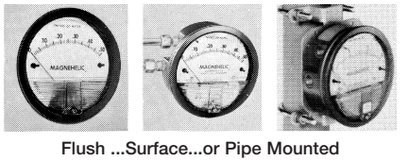

Flush ...Surface...or Pipe Mounted

MOUNTING. A single case size is used for most models of Magnehelic® gages. They can be flush or surface mounted with standard hardware supplied. With the optional A-610 Pipe Mounting Kit they may be conveniently installed on horizontal or vertical 1¼" - 2" pipe. Although calibrated for vertical position, many ranges above 1" may be used at any angle by simply re-zeroing. However, for maximum accuracy, they must be calibrated in the same position in which they are used. These characteristics make Magnehelic® gages ideal for both stationary and portable applications. A 4⁹⁄₁₆" hole is required for flush panel mounting. Complete mounting and connection fittings plus instructions are furnished with each instrument.

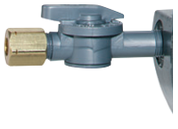

VENT VALVES

In applications where pressure is continuous and the Magnehelic® gage is connected by metal or plastic tubing which cannot be easily removed, we suggest using Dwyer A-310A vent valves to connect gage. Pressure can then be removed to check or re-zero the gage.

HIGH AND MEDIUM PRESSURE MODELS

Installation is similar to standard gages except that a 4¹⁹⁄₁₆" hole is needed for flush mounting. The medium pressure construction is rated for internal pressures up to 35 psig and the high pressure up to 80 psig. Available for all models. Because of larger case, the medium pressure and high pressure models will not fit in a portable case size. Weight 1 lb., 10 oz. Installation of the A-321 safety relief valve on standard Magnehelic® gages often provides adequate protection against infrequent overpressure.

SPECIFICATIONS

Service: Air and non-combustible, compatible gases. (Natural Gas option available.)
Wetted Materials: Consult Factory.
Housing: Die cast aluminum case and bezel, with acrylic cover, Exterior finish is coated gray to withstand 168 hour salt spray corrosion test.
Accuracy: +/- 2% of full scale (±3% on - 0 and ±4% on - 00 ranges), throughout range at 70°F. (21.1°C)
Pressure Limits: -20″ Hg. to 15 psig.† (-0.677 bar to 1.034 bar); MP option; 35 psig (2.41 bar), HP option; 80 psig (5.52 bar).
Overpressure: Relief plug opens at approximately 25 psig (1.72 kPa), standard gages only.
Temperature Limits: 20 to 140°F.* (-6.67 to 60°C).
Size: 4″ (101.6 mm) Diameter dial face.
Mounting Orientation: Diaphragm in vertical position. Consult factory for other position orientations.
Process Connections: 1/8″ female NPT duplicate high and low pressure taps - one pair side and one pair back.
Weight: 1 lb. 2 oz. (510g), MP & HP 2 Lb. 2 oz. (963g).
Standard Accessories: Two 1/8″ NPT plugs for duplicate pressure taps, two 1/8″ pipe thread to rubber tubing adapter and three flush mounting adapters with screws. (Mounting and snap ring retainer substituted for 3 adapters in MP & HP gage accessories.)
*Low temperature models available as special option.
†For applications with high cycle rate within gage total pressure rating, next higher rating is recommended. See Medium and High pressure options at lower left.

OPTIONS AND ACCESSORIES

Transparent overlays

Furnished in red and green to highlight and emphasize critical pressures.

Adjustable signal flag

Integral with plastic gage cover. Available for most models except those with medium or high pressure construction. Can be ordered with gage or separate.

LED Setpoint Indicator

Bright red LED on right of scale shows when setpoint is reached. Field adjustable from gage face, unit operates on 12-24 VDC. Requires MP or HP style cover and bezel.

Portable units

Combine carrying case with any Magnehelic® gage of standard range,except high pressure connection. Includes 9 ft. (2.7 m) of ⅜" I.D. rubber tubing, standhang bracket and terminal tube with holder.

Air filter gage accessory package

Adapts any standard Magnehelic® for use as an air filter gage. Includes aluminum surface mounting bracket with screws, two 5 ft. (1.5 m) lengths of ¼" aluminum tubing two static pressure tips and two molded plastic vent valves, integral compression fittings on both tips and valves.

Dwyer Instruments, Inc./P.O. Box 373/Michigan City, Indiana 46361/Phone 219 879-8000/Fax 219 872-9057 • U.K. Phone (01494)-461707 • Australia Phone (02) 9756-5355

Quality design and construction features

Bezel provides flange for flush mounting in panel.

Clear plastic face is highly resistant to breakage. Provides undistorted viewing of pointer and scale.

Precision litho-printed scale is accurate and easy to read.

Red tipped pointer of heat treated aluminum tubing is easy to see. It is rigidly mounted on the helix shaft.

Pointer stops of molded rubber prevent pointer over-travel without damage.

"Wishbone" assembly provides mounting for helix, helix bearings and pointer shaft.

Jeweled bearings are shock-resistant mounted; provide virtually friction-free motion for helix. Motion damped with high viscosity silicone fluid.

Zero adjustment screw is conveniently located in the plastic cover, and is accessible without removing cover. 0-ring seal provides pressure tightness.

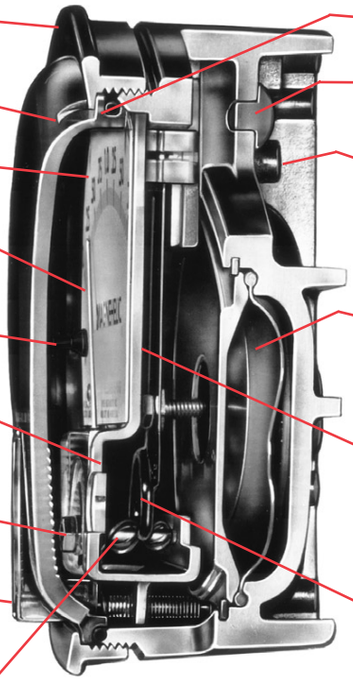

O-ring seal for cover assures pressure integrity of case.

Blowout plug of silicone rubber protects against overpressure on 15 PSIG rated models. Opens at approximately 25 PSIG.

Die cast aluminum case is precision made and iridite-dipped to withstand 168 hour salt spray corrosion test. Exterior finished in baked dark gray hammerloid. One case size is used for all standard pressure options, and for both surface and flush mounting.

Silicone rubber diaphragm with integrally molded O-ring is supported by front and rear plates. It is locked and sealed in position with a sealing plate and retaining ring. Diaphragm motion is restricted to prevent damage due to overpressures.

Calibrated range spring is flat spring steel. Small amplitude of motion assures consistency and long life. It reacts to pressure on diaphragm. Live length adjustable for calibration.

Samarium Cobalt magnet mounted at one end of range spring rotates helix without mechanical linkages.

Helix is precision made from an alloy of high magnetic permeability. Mounted in jeweled bearings, it turns freely, following the magnetic field to move the pointer across the scale.

Dual Scale English/Metric Models		
Model Number	**Range, In. W.C.**	**Range, Pa or kPa**
2000-OD	0-0.5	0-125 Pa
2001D	0-1.0	0-250 Pa
2002D	0-2.0	0-500 Pa
2003D	0-3.0	0-700 Pa
2004D	0-4.0	0-1.0 kPa
2006D	0-6.0	0-1.5 kPa
2008D	0-8.0	0-2.0 kPa
2010D	0-10	0-2.5 kPa

SERIES 2000 MAGNEHELIC® — MODELS AND RANGES
STOCKED MODELS in bold

The models below will fulfill most requirements. Page 5 also shows examples of special models built for OEM customers. For special scales furnished in ounces per square inch, inches of mercury, metric units, etc., contact the factory.

Model Number	Range Inches of Water
2000-00†	0-.25
2000-0†	0-.50
2001	0-1.0
2002	0-2.0
2003	0-3.0
2004	0-4.0
2005	0-5.0
2006	0-6.0
2008	0-8.0
2010	0-10
2015	0-15
2020	0-20
2025	0-25
2030	0-30
2040	0-40
2050	0-50
2060	0-60
2080	0-80
2100	0-100
2150	0-150

Model Number	Range Zero Center Inches of Water
2300-0†	.25-0-.25
2301	.5-0-.5
2302	1-0-1
2304	2-0-2
2310	5-0-5
2320	10-0-10
2330	15-0-15

Model Number	Range PSI
2201	0-1
2202	0-2
2203	0-3
2204	0-4
2205	0-5
2210*	0-10
2215*	0-15
2220*	0-20
2230**	0-30

*MP option standard
**HP option standard

Dual Scale Air Velocity Units

Model Number	Range in W.C.I Velocity, F.P.M.
2000-00AV	0-.25/300-2000
2000-0AV	0-.50/500-2800
2001AV	0-1.0/500-4000
2002AV	0-2.0/1000-5600
2010AV	0-10/2000-12500

For use with pitot tube.

Model Number	Range MM of Water
2000-6MM†	0-6
2000-10MM	0-10
2000-25MM	0-25
2000-50MM	0-50
2000-80MM	0-80
2000-100MM	0-100

Zero Center Ranges

2300-20MM†	10-0-10

Model Number	Range, CM of Water
2000-15CM	0-15
2000-20CM	0-20
2000-25CM	0-25
2000-50CM	0-50
2000-80CM	0-80
2000-100CM	0-100
2000-150CM	0-150
2000-200CM	0-200
2000-250CM	0-250
2000-300CM	0-300

Zero Center Ranges

2300-4CM	2-0-2
2300-10CM	5-0-5
2300-30CM	15-0-15

†These ranges calibrated for vertical scale position.

Model Number	Range, Pascals
2000-60 Pa†	0-60
2000-125 Pa†	0-125
2000-250 Pa	0-250
2000-500 Pa	0-500
2000-750 Pa	0-750

Zero Center Ranges

2300-250 Pa	125-0-125
2300-500 Pa	250-0-250

Model Number	Range, Kilopascals
2000-1 kPa	0-1
2000-1.5 kPa	0-1.5
2000-2 kPa	0-2
2000-3 kPa	0-3
2000-4 kPa	0-4
2000-5 kPa	0-5
2000-8 kPa	0-8
2000-10 kPa	0-10
2000-15 kPa	0-15
2000-20 kPa	0-20
2000-25 kPa	0-25
2000-30 kPa	0-30

Zero Center Ranges

2300-1 kPa	.5-0-.5
2300-3 kPa	1.5-0-1.5

Accessories
A-310A, 3-Way Vent Valve
A-321, Safety Relief Valve
A-432, Portable Kit
A-605, Air Filter Kit
A-610, Pipe Mount Kit
Scale Overlays — Red, Green, Mirrored or Combination, Specify Locations

Options — To order, add suffix: I.E. 2001-ASF
ASF (Adjustable Signal Flag)
HP (High Pressure Option)
LT (Low Temperature to -20°F)
MP (Med. Pressure Option)
SP (Setpoint Indicator)

Special Purpose Ranges
Scale No. 2401 Square Root Specify Range
Scale No. 2402 Blank Scale Specify Range
Model 2000-00N. range -.05 to +.20" W.C. For room pressure monitoring

1011R01-0298P

Series 2000

Magnehelic® Differential Pressure Gages

Indicate positive, negative or differential. Accurate within 2%.

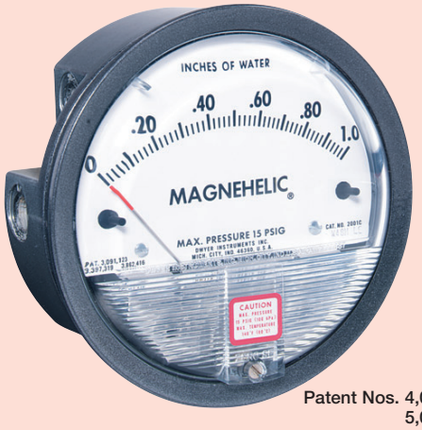

Patent Nos. 4,030,365
5,012,678

Standard Magnehelic® Pressure Gage has a large, easy-to-read 4" dial.

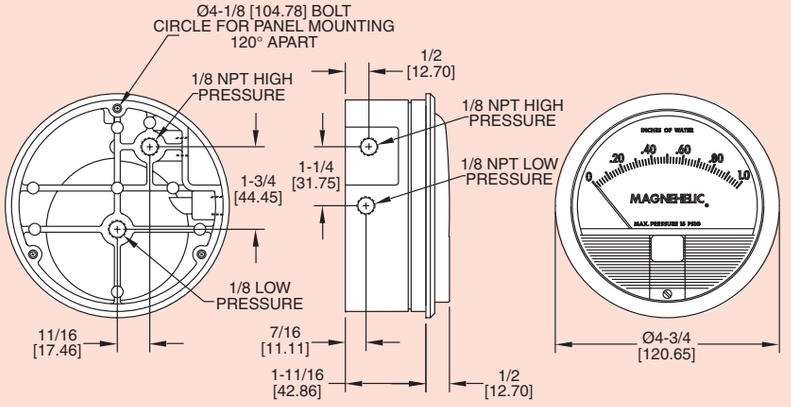

Dimensions, Standard Series 2000 Magnehelic® Pressure Gages. (Slightly different on medium and high pressure models)

Select the Dwyer Magnehelic® gage for high accuracy – guaranteed within 2% of full scale – and for the wide choice of 81 models available to suit your needs precisely. Using Dwyer's simple, frictionless Magnehelic® movement, it quickly indicates low air or non-corrosive gas pressures – either positive, negative (vacuum) or differential. The design resists shock, vibration and over-pressures. No manometer fluid to evaporate, freeze or cause toxic or leveling problems. It's inexpensive, too.

The Magnehelic® is the industry standard to measure fan and blower pressures, filter resistance, air velocity, furnace draft, pressure drop across orifice plates, liquid levels with bubbler systems and pressures in fluid amplifier or fluidic systems. It also checks gas-air ratio controls and automatic valves, and monitors blood and respiratory pressures in medical care equipment.

NOTE: Do Not use with Hydrogen gas. Dangerous reactions will occur.

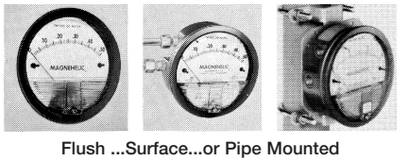

Flush ...Surface...or Pipe Mounted

MOUNTING. A single case size is used for most models of Magnehelic® gages. They can be flush or surface mounted with standard hardware supplied. With the optional A-610 Pipe Mounting Kit they may be conveniently installed on horizontal or vertical 1¼" - 2" pipe. Although calibrated for vertical position, many ranges above 1" may be used at any angle by simply re-zeroing. However, for maximum accuracy, they must be calibrated in the same position in which they are used. These characteristics make Magnehelic® gages ideal for both stationary and portable applications. A 4⁹⁄₁₆" hole is required for flush panel mounting. Complete mounting and connection fittings plus instructions are furnished with each instrument.

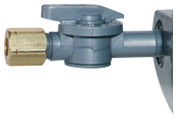

VENT VALVES

In applications where pressure is continuous and the Magnehelic® gage is connected by metal or plastic tubing which cannot be easily removed, we suggest using Dwyer A-310A vent valves to connect gage. Pressure can then be removed to check or re-zero the gage.

HIGH AND MEDIUM PRESSURE MODELS

Installation is similar to standard gages except that a 4¹⁹⁄₁₆" hole is needed for flush mounting. The medium pressure construction is rated for internal pressures up to 35 psig and the high pressure up to 80 psig. Available for all models. Because of larger case, the medium pressure and high pressure models will not fit in a portable case size. Weight 1 lb., 10 oz. Installation of the A-321 safety relief valve on standard Magnehelic® gages often provides adequate protection against infrequent overpressure.

SPECIFICATIONS

Service: Air and non-combustible, compatible gases. (Natural Gas option available.)
Wetted Materials: Consult Factory.
Housing: Die cast aluminum case and bezel, with acrylic cover, Exterior finish is coated gray to withstand 168 hour salt spray corrosion test.
Accuracy: +/- 2% of full scale (±3% on - 0 and ±4% on - 00 ranges), throughout range at 70°F. (21.1°C)
Pressure Limits: -20″ Hg. to 15 psig.† (-0.677 bar to 1.034 bar); MP option; 35 psig (2.41 bar), HP option; 80 psig (5.52 bar).
Overpressure: Relief plug opens at approximately 25 psig (1.72 kPa), standard gages only.
Temperature Limits: 20 to 140°F.* (-6.67 to 60°C).
Size: 4″ (101.6 mm) Diameter dial face.
Mounting Orientation: Diaphragm in vertical position. Consult factory for other position orientations.
Process Connections: 1/8″ female NPT duplicate high and low pressure taps - one pair side and one pair back.
Weight: 1 lb. 2 oz. (510g), MP & HP 2 Lb. 2 oz. (963g).
Standard Accessories: Two 1/8″ NPT plugs for duplicate pressure taps, two 1/8″ pipe thread to rubber tubing adapter and three flush mounting adapters with screws. (Mounting and snap ring retainer substituted for 3 adapters in MP & HP gage accessories.)
*Low temperature models available as special option.
†For applications with high cycle rate within gage total pressure rating, next higher rating is recommended. See Medium and High pressure options at lower left.

OPTIONS AND ACCESSORIES

Transparent overlays

Furnished in red and green to highlight and emphasize critical pressures.

Adjustable signal flag

Integral with plastic gage cover. Available for most models except those with medium or high pressure construction. Can be ordered with gage or separate.

LED Setpoint Indicator

Bright red LED on right of scale shows when setpoint is reached. Field adjustable from gage face, unit operates on 12-24 VDC. Requires MP or HP style cover and bezel.

Portable units

Combine carrying case with any Magnehelic® gage of standard range,except high pressure connection. Includes 9 ft. (2.7 m) of ⅜" I.D. rubber tubing, standhang bracket and terminal tube with holder.

Air filter gage accessory package

Adapts any standard Magnehelic® for use as an air filter gage. Includes aluminum surface mounting bracket with screws, two 5 ft. (1.5 m) lengths of ¼" aluminum tubing two static pressure tips and two molded plastic vent valves, integral compression fittings on both tips and valves.

Dwyer Instruments, Inc./P.O. Box 373/Michigan City, Indiana 46361/Phone 219 879-8000/Fax 219 872-9057 • U.K. Phone (01494)-461707 • Australia Phone (02) 9756-5355

Quality design and construction features

Bezel provides flange for flush mounting in panel.

Clear plastic face is highly resistant to breakage. Provides undistorted viewing of pointer and scale.

Precision litho-printed scale is accurate and easy to read.

Red tipped pointer of heat treated aluminum tubing is easy to see. It is rigidly mounted on the helix shaft.

Pointer stops of molded rubber prevent pointer over-travel without damage.

"Wishbone" assembly provides mounting for helix, helix bearings and pointer shaft.

Jeweled bearings are shock-resistant mounted; provide virtually friction-free motion for helix. Motion damped with high viscosity silicone fluid.

Zero adjustment screw is conveniently located in the plastic cover, and is accessible without removing cover. 0-ring seal provides pressure tightness.

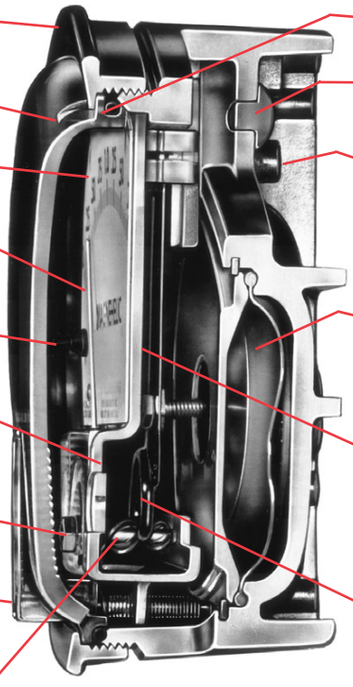

O-ring seal for cover assures pressure integrity of case.

Blowout plug of silicone rubber protects against overpressure on 15 PSIG rated models. Opens at approximately 25 PSIG.

Die cast aluminum case is precision made and iridite-dipped to withstand 168 hour salt spray corrosion test. Exterior finished in baked dark gray hammerloid. One case size is used for all standard pressure options, and for both surface and flush mounting.

Silicone rubber diaphragm with integrally molded O-ring is supported by front and rear plates. It is locked and sealed in position with a sealing plate and retaining ring. Diaphragm motion is restricted to prevent damage due to overpressures.

Calibrated range spring is flat spring steel. Small amplitude of motion assures consistency and long life. It reacts to pressure on diaphragm. Live length adjustable for calibration.

Samarium Cobalt magnet mounted at one end of range spring rotates helix without mechanical linkages.

Helix is precision made from an alloy of high magnetic permeability. Mounted in jeweled bearings, it turns freely, following the magnetic field to move the pointer across the scale.

Dual Scale English/Metric Models		
Model Number	**Range, In. W.C.**	**Range, Pa or kPa**
2000-OD	0-0.5	0-125 Pa
2001D	0-1.0	0-250 Pa
2002D	0-2.0	0-500 Pa
2003D	0-3.0	0-700 Pa
2004D	0-4.0	0-1.0 kPa
2006D	0-6.0	0-1.5 kPa
2008D	0-8.0	0-2.0 kPa
2010D	0-10	0-2.5 kPa

SERIES 2000 MAGNEHELIC® — MODELS AND RANGES
STOCKED MODELS in bold

The models below will fulfill most requirements. Page 5 also shows examples of special models built for OEM customers. For special scales furnished in ounces per square inch, inches of mercury, metric units, etc., contact the factory.

Model Number	Range Inches of Water
2000-00†	0-.25
2000-0†	0-.50
2001	0-1.0
2002	0-2.0
2003	0-3.0
2004	0-4.0
2005	0-5.0
2006	0-6.0
2008	0-8.0
2010	0-10
2015	0-15
2020	0-20
2025	0-25
2030	0-30
2040	0-40
2050	0-50
2060	0-60
2080	0-80
2100	0-100
2150	0-150

Model Number	Range Zero Center Inches of Water
2300-0†	.25-0-.25
2301	.5-0-.5
2302	1-0-1
2304	2-0-2
2310	5-0-5
2320	10-0-10
2330	15-0-15

Model Number	Range PSI
2201	0-1
2202	0-2
2203	0-3
2204	0-4
2205	0-5
2210*	0-10
2215*	0-15
2220*	0-20
2230**	0-30

*MP option standard
**HP option standard

Dual Scale Air Velocity Units

Model Number	Range in W.C.I Velocity, F.P.M.
2000-00AV	0-.25/300-2000
2000-0AV	0-.50/500-2800
2001AV	0-1.0/500-4000
2002AV	0-2.0/1000-5600
2010AV	0-10/2000-12500

For use with pitot tube.

Model Number	Range MM of Water
2000-6MM†	0-6
2000-10MM	0-10
2000-25MM	0-25
2000-50MM	0-50
2000-80MM	0-80
2000-100MM	0-100
Zero Center Ranges	
2300-20MM†	10-0-10

Model Number	Range, CM of Water
2000-15CM	0-15
2000-20CM	0-20
2000-25CM	0-25
2000-50CM	0-50
2000-80CM	0-80
2000-100CM	0-100
2000-150CM	0-150
2000-200CM	0-200
2000-250CM	0-250
2000-300CM	0-300
Zero Center Ranges	
2300-4CM	2-0-2
2300-10CM	5-0-5
2300-30CM	15-0-15

†These ranges calibrated for vertical scale position.

Model Number	Range, Pascals
2000-60 Pa†	0-60
2000-125 Pa†	0-125
2000-250 Pa	0-250
2000-500 Pa	0-500
2000-750 Pa	0-750
Zero Center Ranges	
2300-250 Pa	125-0-125
2300-500 Pa	250-0-250

Model Number	Range, Kilopascals
2000-1 kPa	0-1
2000-1.5 kPa	0-1.5
2000-2 kPa	0-2
2000-3 kPa	0-3
2000-4 kPa	0-4
2000-5 kPa	0-5
2000-8 kPa	0-8
2000-10 kPa	0-10
2000-15 kPa	0-15
2000-20 kPa	0-20
2000-25 kPa	0-25
2000-30 kPa	0-30
Zero Center Ranges	
2300-1 kPa	.5-0-.5
2300-3 kPa	1.5-0-1.5

Accessories
A-310A, 3-Way Vent Valve
A-321, Safety Relief Valve
A-432, Portable Kit
A-605, Air Filter Kit
A-610, Pipe Mount Kit

Options — To order, add suffix: I.E. 2001-ASF
ASF (Adjustable Signal Flag)
HP (High Pressure Option)
LT (Low Temperatures to -20°F)
MP (Med. Pressure Option)
SP (Setpoint Indicator

Scale Overlays — Red, Green, Mirrored or Combination, Specify Locations

Special Purpose Ranges
Scale No. 2401 — Scale No. 2402
Square Root — Blank Scale
Specify Range — Specify Range

Model 2000-00N. range -.05 to +.20" W.C. For room pressure monitoring

1011R01-0298P

Series 2000

Magnehelic® Differential Pressure Gages

Indicate positive, negative or differential. Accurate within 2%.

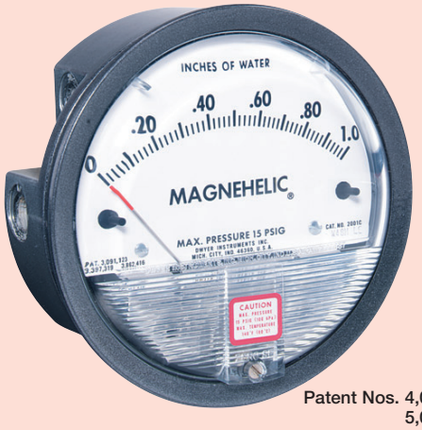

Patent Nos. 4,030,365
5,012,678

Standard Magnehelic® Pressure Gage has a large, easy-to-read 4" dial.

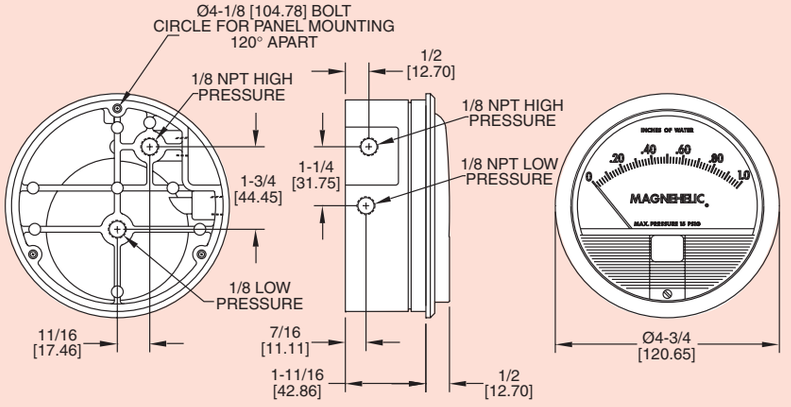

Dimensions, Standard Series 2000 Magnehelic® Pressure Gages. (Slightly different on medium and high pressure models)

Select the Dwyer Magnehelic® gage for high accuracy – guaranteed within 2% of full scale – and for the wide choice of 81 models available to suit your needs precisely. Using Dwyer's simple, frictionless Magnehelic® movement, it quickly indicates low air or non-corrosive gas pressures – either positive, negative (vacuum) or differential. The design resists shock, vibration and over-pressures. No manometer fluid to evaporate, freeze or cause toxic or leveling problems. It's inexpensive, too.

The Magnehelic® is the industry standard to measure fan and blower pressures, filter resistance, air velocity, furnace draft, pressure drop across orifice plates, liquid levels with bubbler systems and pressures in fluid amplifier or fluidic systems. It also checks gas-air ratio controls and automatic valves, and monitors blood and respiratory pressures in medical care equipment.

NOTE: Do Not use with Hydrogen gas. Dangerous reactions will occur.

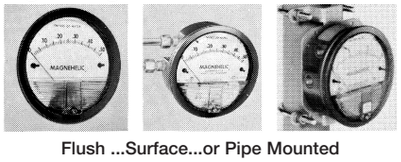

Flush ...Surface...or Pipe Mounted

MOUNTING. A single case size is used for most models of Magnehelic® gages. They can be flush or surface mounted with standard hardware supplied. With the optional A-610 Pipe Mounting Kit they may be conveniently installed on horizontal or vertical 1¼" - 2" pipe. Although calibrated for vertical position, many ranges above 1" may be used at any angle by simply re-zeroing. However, for maximum accuracy, they must be calibrated in the same position in which they are used. These characteristics make Magnehelic® gages ideal for both stationary and portable applications. A 4⁹⁄₁₆" hole is required for flush panel mounting. Complete mounting and connection fittings plus instructions are furnished with each instrument.

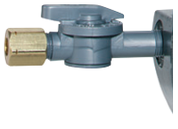

VENT VALVES

In applications where pressure is continuous and the Magnehelic® gage is connected by metal or plastic tubing which cannot be easily removed, we suggest using Dwyer A-310A vent valves to connect gage. Pressure can then be removed to check or re-zero the gage.

HIGH AND MEDIUM PRESSURE MODELS

Installation is similar to standard gages except that a 4¹⁹⁄₁₆" hole is needed for flush mounting. The medium pressure construction is rated for internal pressures up to 35 psig and the high pressure up to 80 psig. Available for all models. Because of larger case, the medium pressure and high pressure models will not fit in a portable case size. Weight 1 lb., 10 oz. Installation of the A-321 safety relief valve on standard Magnehelic® gages often provides adequate protection against infrequent overpressure.

SPECIFICATIONS

Service: Air and non-combustible, compatible gases. (Natural Gas option available.)
Wetted Materials: Consult Factory.
Housing: Die cast aluminum case and bezel, with acrylic cover, Exterior finish is coated gray to withstand 168 hour salt spray corrosion test.
Accuracy: +/- 2% of full scale (±3% on - 0 and ±4% on - 00 ranges), throughout range at 70°F. (21.1°C)
Pressure Limits: -20″ Hg. to 15 psig.† (-0.677 bar to 1.034 bar); MP option; 35 psig (2.41 bar), HP option; 80 psig (5.52 bar).
Overpressure: Relief plug opens at approximately 25 psig (1.72 kPa), standard gages only.
Temperature Limits: 20 to 140°F.* (-6.67 to 60°C).
Size: 4″ (101.6 mm) Diameter dial face.
Mounting Orientation: Diaphragm in vertical position. Consult factory for other position orientations.
Process Connections: 1/8″ female NPT duplicate high and low pressure taps - one pair side and one pair back.
Weight: 1 lb. 2 oz. (510g), MP & HP 2 Lb. 2 oz. (963g).
Standard Accessories: Two 1/8″ NPT plugs for duplicate pressure taps, two 1/8″ pipe thread to rubber tubing adapter and three flush mounting adapters with screws. (Mounting and snap ring retainer substituted for 3 adapters in MP & HP gage accessories.)
*Low temperature models available as special option.
†For applications with high cycle rate within gage total pressure rating, next higher rating is recommended. See Medium and High pressure options at lower left.

OPTIONS AND ACCESSORIES

Transparent overlays

Furnished in red and green to highlight and emphasize critical pressures.

Adjustable signal flag

Integral with plastic gage cover. Available for most models except those with medium or high pressure construction. Can be ordered with gage or separate.

LED Setpoint Indicator

Bright red LED on right of scale shows when setpoint is reached. Field adjustable from gage face, unit operates on 12-24 VDC. Requires MP or HP style cover and bezel.

Portable units

Combine carrying case with any Magnehelic® gage of standard range,except high pressure connection. Includes 9 ft. (2.7 m) of ⅜" I.D. rubber tubing, standhang bracket and terminal tube with holder.

Air filter gage accessory package

Adapts any standard Magnehelic® for use as an air filter gage. Includes aluminum surface mounting bracket with screws, two 5 ft. (1.5 m) lengths of ¼" aluminum tubing two static pressure tips and two molded plastic vent valves, integral compression fittings on both tips and valves.

Dwyer Instruments, Inc./P.O. Box 373/Michigan City, Indiana 46361/Phone 219 879-8000/Fax 219 872-9057 • U.K. Phone (01494)-461707 • Australia Phone (02) 9756-5355

Quality design and construction features

Bezel provides flange for flush mounting in panel.

Clear plastic face is highly resistant to breakage. Provides undistorted viewing of pointer and scale.

Precision litho-printed scale is accurate and easy to read.

Red tipped pointer of heat treated aluminum tubing is easy to see. It is rigidly mounted on the helix shaft.

Pointer stops of molded rubber prevent pointer over-travel without damage.

"Wishbone" assembly provides mounting for helix, helix bearings and pointer shaft.

Jeweled bearings are shock-resistant mounted; provide virtually friction-free motion for helix. Motion damped with high viscosity silicone fluid.

Zero adjustment screw is conveniently located in the plastic cover, and is accessible without removing cover. 0-ring seal provides pressure tightness.

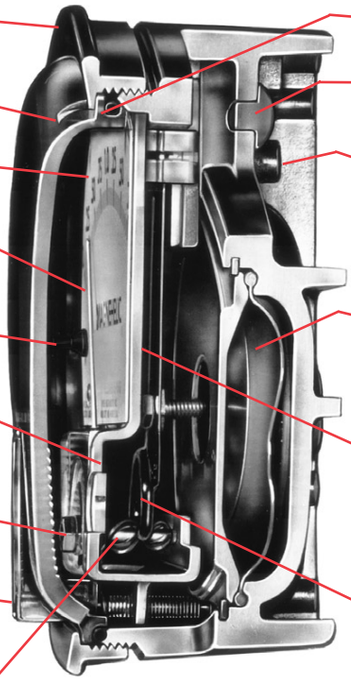

O-ring seal for cover assures pressure integrity of case.

Blowout plug of silicone rubber protects against overpressure on 15 PSIG rated models. Opens at approximately 25 PSIG.

Die cast aluminum case is precision made and iridite-dipped to withstand 168 hour salt spray corrosion test. Exterior finished in baked dark gray hammerloid. One case size is used for all standard pressure options, and for both surface and flush mounting.

Silicone rubber diaphragm with integrally molded O-ring is supported by front and rear plates. It is locked and sealed in position with a sealing plate and retaining ring. Diaphragm motion is restricted to prevent damage due to overpressures.

Calibrated range spring is flat spring steel. Small amplitude of motion assures consistency and long life. It reacts to pressure on diaphragm. Live length adjustable for calibration.

Samarium Cobalt magnet mounted at one end of range spring rotates helix without mechanical linkages.

Helix is precision made from an alloy of high magnetic permeability. Mounted in jeweled bearings, it turns freely, following the magnetic field to move the pointer across the scale.

Dual Scale English/Metric Models		
Model Number	**Range, In. W.C.**	**Range, Pa or kPa**
2000-OD	0-0.5	0-125 Pa
2001D	0-1.0	0-250 Pa
2002D	0-2.0	0-500 Pa
2003D	0-3.0	0-700 Pa
2004D	0-4.0	0-1.0 kPa
2006D	0-6.0	0-1.5 kPa
2008D	0-8.0	0-2.0 kPa
2010D	0-10	0-2.5 kPa

SERIES 2000 MAGNEHELIC® — MODELS AND RANGES
STOCKED MODELS in bold

The models below will fulfill most requirements. Page 5 also shows examples of special models built for OEM customers. For special scales furnished in ounces per square inch, inches of mercury, metric units, etc., contact the factory.

Model Number	Range Inches of Water
2000-00†	0-.25
2000-0†	0-.50
2001	0-1.0
2002	0-2.0
2003	0-3.0
2004	0-4.0
2005	0-5.0
2006	0-6.0
2008	0-8.0
2010	0-10
2015	0-15
2020	0-20
2025	0-25
2030	0-30
2040	0-40
2050	0-50
2060	0-60
2080	0-80
2100	0-100
2150	0-150

Model Number	Range Zero Center Inches of Water
2300-0†	.25-0-.25
2301	.5-0-.5
2302	1-0-1
2304	2-0-2
2310	5-0-5
2320	10-0-10
2330	15-0-15

Model Number	Range PSI
2201	0-1
2202	0-2
2203	0-3
2204	0-4
2205	0-5
2210*	0-10
2215*	0-15
2220*	0-20
2230**	0-30

*MP option standard
**HP option standard

Dual Scale Air Velocity Units

Model Number	Range in W.C.I Velocity, F.P.M.
2000-00AV	0-.25/300-2000
2000-0AV	0-.50/500-2800
2001AV	0-1.0/500-4000
2002AV	0-2.0/1000-5600
2010AV	0-10/2000-12500

For use with pitot tube.

Model Number	Range MM of Water
2000-6MM†	0-6
2000-10MM	0-10
2000-25MM	0-25
2000-50MM	0-50
2000-80MM	0-80
2000-100MM	0-100
Zero Center Ranges	
2300-20MM†	10-0-10

Model Number	Range, CM of Water
2000-15CM	0-15
2000-20CM	0-20
2000-25CM	0-25
2000-50CM	0-50
2000-80CM	0-80
2000-100CM	0-100
2000-150CM	0-150
2000-200CM	0-200
2000-250CM	0-250
2000-300CM	0-300
Zero Center Ranges	
2300-4CM	2-0-2
2300-10CM	5-0-5
2300-30CM	15-0-15

†These ranges calibrated for vertical scale position.

Model Number	Range, Pascals
2000-60 Pa†	0-60
2000-125 Pa†	0-125
2000-250 Pa	0-250
2000-500 Pa	0-500
2000-750 Pa	0-750
Zero Center Ranges	
2300-250 Pa	125-0-125
2300-500 Pa	250-0-250

Model Number	Range, Kilopascals
2000-1 kPa	0-1
2000-1.5 kPa	0-1.5
2000-2 kPa	0-2
2000-3 kPa	0-3
2000-4 kPa	0-4
2000-5 kPa	0-5
2000-8 kPa	0-8
2000-10 kPa	0-10
2000-15 kPa	0-15
2000-20 kPa	0-20
2000-25 kPa	0-25
2000-30 kPa	0-30
Zero Center Ranges	
2300-1 kPa	.5-0-.5
2300-3 kPa	1.5-0-1.5

Accessories
A-310A, 3-Way Vent Valve
A-321, Safety Relief Valve
A-432, Portable Kit
A-605, Air Filter Kit
A-610, Pipe Mount Kit

Options — To order, add suffix: I.E. 2001-ASF
ASF (Adjustable Signal Flag)
HP (High Pressure Option)
LT (Low Temperatures to -20°F)
MP (Med. Pressure Option)
SP (Setpoint Indicator

Scale Overlays — Red, Green, Mirrored or Combination, Specify Locations

Special Purpose Ranges
Scale No. 2401 Square Root Specify Range
Scale No. 2402 Blank Scale Specify Range

Model 2000-00N. range -.05 to +.20" W.C. For room pressure monitoring

1011R01-0298P

Series 2000

Magnehelic® Differential Pressure Gages

Indicate positive, negative or differential. Accurate within 2%.

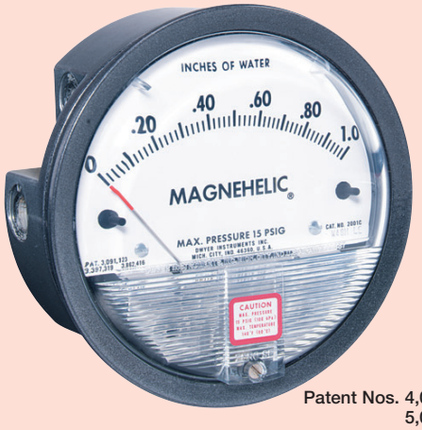

Patent Nos. 4,030,365
5,012,678

Standard Magnehelic® Pressure Gage has a large, easy-to-read 4" dial.

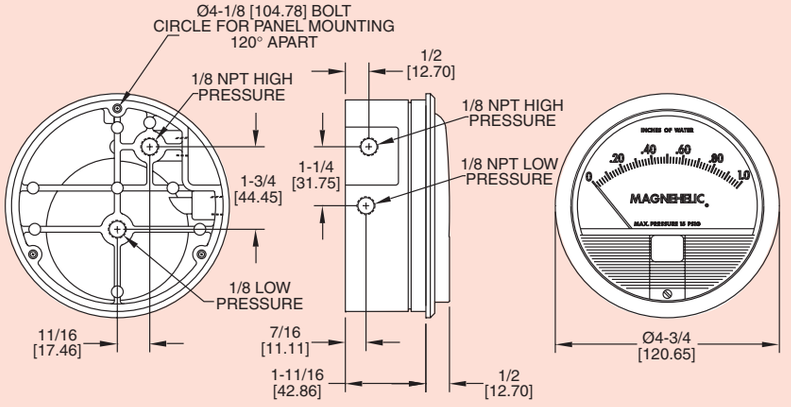

Dimensions, Standard Series 2000 Magnehelic® Pressure Gages. (Slightly different on medium and high pressure models)

Select the Dwyer Magnehelic® gage for high accuracy – guaranteed within 2% of full scale – and for the wide choice of 81 models available to suit your needs precisely. Using Dwyer's simple, frictionless Magnehelic® movement, it quickly indicates low air or non-corrosive gas pressures – either positive, negative (vacuum) or differential. The design resists shock, vibration and over-pressures. No manometer fluid to evaporate, freeze or cause toxic or leveling problems. It's inexpensive, too.

The Magnehelic® is the industry standard to measure fan and blower pressures, filter resistance, air velocity, furnace draft, pressure drop across orifice plates, liquid levels with bubbler systems and pressures in fluid amplifier or fluidic systems. It also checks gas-air ratio controls and automatic valves, and monitors blood and respiratory pressures in medical care equipment.

NOTE: Do Not use with Hydrogen gas. Dangerous reactions will occur.

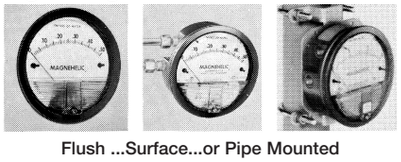

Flush ...Surface...or Pipe Mounted

MOUNTING. A single case size is used for most models of Magnehelic® gages. They can be flush or surface mounted with standard hardware supplied. With the optional A-610 Pipe Mounting Kit they may be conveniently installed on horizontal or vertical 1¼" - 2" pipe. Although calibrated for vertical position, many ranges above 1" may be used at any angle by simply re-zeroing. However, for maximum accuracy, they must be calibrated in the same position in which they are used. These characteristics make Magnehelic® gages ideal for both stationary and portable applications. A 4⁹⁄₁₆" hole is required for flush panel mounting. Complete mounting and connection fittings plus instructions are furnished with each instrument.

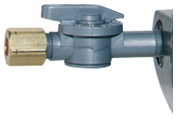

VENT VALVES

In applications where pressure is continuous and the Magnehelic® gage is connected by metal or plastic tubing which cannot be easily removed, we suggest using Dwyer A-310A vent valves to connect gage. Pressure can then be removed to check or re-zero the gage.

HIGH AND MEDIUM PRESSURE MODELS

Installation is similar to standard gages except that a 4¹⁹⁄₁₆" hole is needed for flush mounting. The medium pressure construction is rated for internal pressures up to 35 psig and the high pressure up to 80 psig. Available for all models. Because of larger case, the medium pressure and high pressure models will not fit in a portable case size. Weight 1 lb., 10 oz. Installation of the A-321 safety relief valve on standard Magnehelic® gages often provides adequate protection against infrequent overpressure.

SPECIFICATIONS

Service: Air and non-combustible, compatible gases. (Natural Gas option available.)
Wetted Materials: Consult Factory.
Housing: Die cast aluminum case and bezel, with acrylic cover, Exterior finish is coated gray to withstand 168 hour salt spray corrosion test.
Accuracy: +/- 2% of full scale (±3% on - 0 and ±4% on - 00 ranges), throughout range at 70°F. (21.1°C)
Pressure Limits: -20″ Hg. to 15 psig.† (-0.677 bar to 1.034 bar); MP option; 35 psig (2.41 bar), HP option; 80 psig (5.52 bar).
Overpressure: Relief plug opens at approximately 25 psig (1.72 kPa), standard gages only.
Temperature Limits: 20 to 140°F.* (-6.67 to 60°C).
Size: 4″ (101.6 mm) Diameter dial face.
Mounting Orientation: Diaphragm in vertical position. Consult factory for other position orientations.
Process Connections: 1/8″ female NPT duplicate high and low pressure taps - one pair side and one pair back.
Weight: 1 lb. 2 oz. (510g), MP & HP 2 Lb. 2 oz. (963g).
Standard Accessories: Two 1/8″ NPT plugs for duplicate pressure taps, two 1/8″ pipe thread to rubber tubing adapter and three flush mounting adapters with screws. (Mounting and snap ring retainer substituted for 3 adapters in MP & HP gage accessories.)
*Low temperature models available as special option.
†For applications with high cycle rate within gage total pressure rating, next higher rating is recommended. See Medium and High pressure options at lower left.

OPTIONS AND ACCESSORIES

Transparent overlays

Furnished in red and green to highlight and emphasize critical pressures.

Adjustable signal flag

Integral with plastic gage cover. Available for most models except those with medium or high pressure construction. Can be ordered with gage or separate.

LED Setpoint Indicator

Bright red LED on right of scale shows when setpoint is reached. Field adjustable from gage face, unit operates on 12-24 VDC. Requires MP or HP style cover and bezel.

Portable units

Combine carrying case with any Magnehelic® gage of standard range,except high pressure connection. Includes 9 ft. (2.7 m) of ⅜" I.D. rubber tubing, standhang bracket and terminal tube with holder.

Air filter gage accessory package

Adapts any standard Magnehelic® for use as an air filter gage. Includes aluminum surface mounting bracket with screws, two 5 ft. (1.5 m) lengths of ¼" aluminum tubing two static pressure tips and two molded plastic vent valves, integral compression fittings on both tips and valves.

Dwyer Instruments, Inc./P.O. Box 373/Michigan City, Indiana 46361/Phone 219 879-8000/Fax 219 872-9057 • U.K. Phone (01494)-461707 • Australia Phone (02) 9756-5355

Quality design and construction features

Bezel provides flange for flush mounting in panel.

Clear plastic face is highly resistant to breakage. Provides undistorted viewing of pointer and scale.

Precision litho-printed scale is accurate and easy to read.

Red tipped pointer of heat treated aluminum tubing is easy to see. It is rigidly mounted on the helix shaft.

Pointer stops of molded rubber prevent pointer over-travel without damage.

"Wishbone" assembly provides mounting for helix, helix bearings and pointer shaft.

Jeweled bearings are shock-resistant mounted; provide virtually friction-free motion for helix. Motion damped with high viscosity silicone fluid.

Zero adjustment screw is conveniently located in the plastic cover, and is accessible without removing cover. 0-ring seal provides pressure tightness.

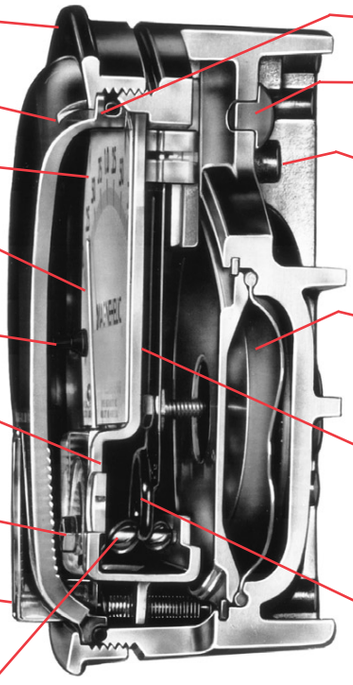

O-ring seal for cover assures pressure integrity of case.

Blowout plug of silicone rubber protects against overpressure on 15 PSIG rated models. Opens at approximately 25 PSIG.

Die cast aluminum case is precision made and iridite-dipped to withstand 168 hour salt spray corrosion test. Exterior finished in baked dark gray hammerloid. One case size is used for all standard pressure options, and for both surface and flush mounting.

Silicone rubber diaphragm with integrally molded O-ring is supported by front and rear plates. It is locked and sealed in position with a sealing plate and retaining ring. Diaphragm motion is restricted to prevent damage due to overpressures.

Calibrated range spring is flat spring steel. Small amplitude of motion assures consistency and long life. It reacts to pressure on diaphragm. Live length adjustable for calibration.

Samarium Cobalt magnet mounted at one end of range spring rotates helix without mechanical linkages.

Helix is precision made from an alloy of high magnetic permeability. Mounted in jeweled bearings, it turns freely, following the magnetic field to move the pointer across the scale.

Dual Scale English/Metric Models		
Model Number	**Range, In. W.C.**	**Range, Pa or kPa**
2000-OD	0-0.5	0-125 Pa
2001D	0-1.0	0-250 Pa
2002D	0-2.0	0-500 Pa
2003D	0-3.0	0-700 Pa
2004D	0-4.0	0-1.0 kPa
2006D	0-6.0	0-1.5 kPa
2008D	0-8.0	0-2.0 kPa
2010D	0-10	0-2.5 kPa

SERIES 2000 MAGNEHELIC® — MODELS AND RANGES
STOCKED MODELS in bold

The models below will fulfill most requirements. Page 5 also shows examples of special models built for OEM customers. For special scales furnished in ounces per square inch, inches of mercury, metric units, etc., contact the factory.

Model Number	Range Inches of Water
2000-00†	0-.25
2000-0†	0-.50
2001	0-1.0
2002	0-2.0
2003	0-3.0
2004	0-4.0
2005	0-5.0
2006	0-6.0
2008	0-8.0
2010	0-10
2015	0-15
2020	0-20
2025	0-25
2030	0-30
2040	0-40
2050	0-50
2060	0-60
2080	0-80
2100	0-100
2150	0-150

Model Number	Range Zero Center Inches of Water
2300-0†	.25-0-.25
2301	.5-0-.5
2302	1-0-1
2304	2-0-2
2310	5-0-5
2320	10-0-10
2330	15-0-15

Model Number	Range PSI
2201	0-1
2202	0-2
2203	0-3
2204	0-4
2205	0-5
2210*	0-10
2215*	0-15
2220*	0-20
2230**	0-30

*MP option standard
**HP option standard

Dual Scale Air Velocity Units

Model Number	Range in W.C.I Velocity, F.P.M.
2000-00AV	0-.25/300-2000
2000-0AV	0-.50/500-2800
2001AV	0-1.0/500-4000
2002AV	0-2.0/1000-5600
2010AV	0-10/2000-12500

For use with pitot tube.

Model Number	Range MM of Water
2000-6MM†	0-6
2000-10MM	0-10
2000-25MM	0-25
2000-50MM	0-50
2000-80MM	0-80
2000-100MM	0-100
Zero Center Ranges	
2300-20MM†	10-0-10

Model Number	Range, CM of Water
2000-15CM	0-15
2000-20CM	0-20
2000-25CM	0-25
2000-50CM	0-50
2000-80CM	0-80
2000-100CM	0-100
2000-150CM	0-150
2000-200CM	0-200
2000-250CM	0-250
2000-300CM	0-300
Zero Center Ranges	
2300-4CM	2-0-2
2300-10CM	5-0-5
2300-30CM	15-0-15

†These ranges calibrated for vertical scale position.

Model Number	Range, Pascals
2000-60 Pa†	0-60
2000-125 Pa†	0-125
2000-250 Pa	0-250
2000-500 Pa	0-500
2000-750 Pa	0-750
Zero Center Ranges	
2300-250 Pa	125-0-125
2300-500 Pa	250-0-250

Model Number	Range, Kilopascals
2000-1 kPa	0-1
2000-1.5 kPa	0-1.5
2000-2 kPa	0-2
2000-3 kPa	0-3
2000-4 kPa	0-4
2000-5 kPa	0-5
2000-8 kPa	0-8
2000-10 kPa	0-10
2000-15 kPa	0-15
2000-20 kPa	0-20
2000-25 kPa	0-25
2000-30 kPa	0-30
Zero Center Ranges	
2300-1 kPa	.5-0-.5
2300-3 kPa	1.5-0-1.5

Accessories
A-310A, 3-Way Vent Valve
A-321, Safety Relief Valve
A-432, Portable Kit
A-605, Air Filter Kit
A-610, Pipe Mount Kit

Options — To order, add suffix: I.E. 2001-ASF
ASF (Adjustable Signal Flag)
HP (High Pressure Option)
LT (Low Temperatures to -20°F)
MP (Med. Pressure Option)
SP (Setpoint Indicator

Scale Overlays — Red, Green, Mirrored or Combination, Specify Locations

Special Purpose Ranges
Scale No. 2401 Square Root Specify Range
Scale No. 2402 Blank Scale Specify Range

Model 2000-00N. range -.05 to +.20" W.C. For room pressure monitoring

1011R01-0298P

Magnehelic® Differential Pressure Gage

OPERATING INSTRUCTIONS

SPECIFICATIONS

Dimensions: 4-3/4″ dia. x 2-3/16″ deep.
Weight: 1 lb. 2 oz.
Finished: Baked dark gray enamel.
Connections: 1/8″ NPT high and low pressure taps, duplicated, one pair side and one pair back.
Accuracy: Plus or minus 2% of full scale, at 70°F. (Model 2000-0, 3%; 2000-00, 4%).
Pressure Rating: 15 PSI (0,35 bar)
Ambient Temperature Range: 20° to 140°F (-7 to 60°C).
Standard gage accessories include two 1/8″ NPT plugs for duplicate pressure taps, two 1/8″ NPT pipe thread to rubber tubing adapters, and three flush mounting adapters with screws.

Caution: For use with air or compatible gases only.

For repeated over-ranging or high cycle rates, contact factory.

Not for use with Hydrogen gas. Dangerous reactions will occur.

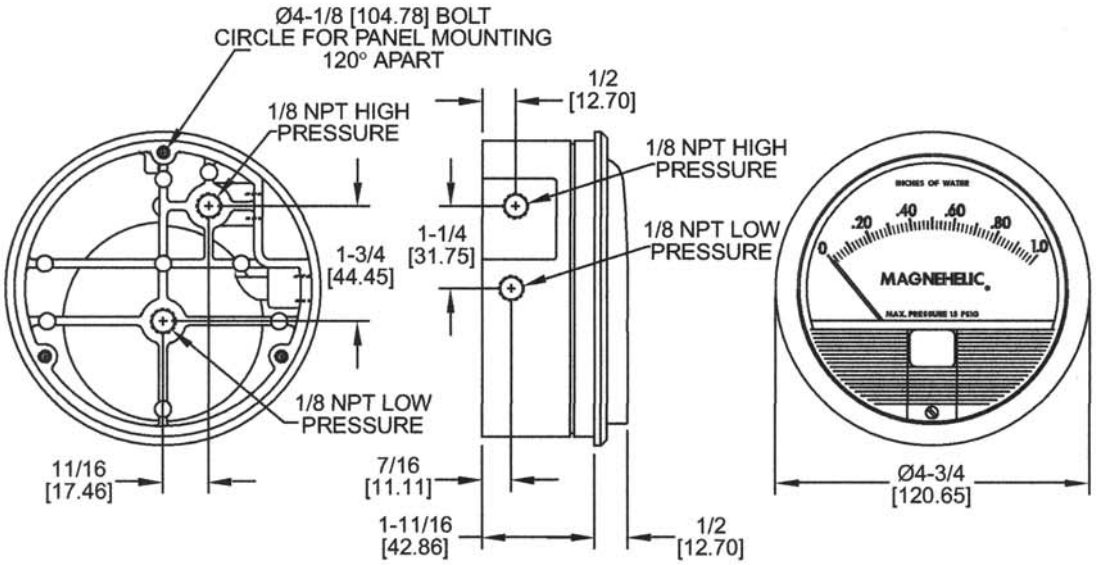

DWYER INSTRUMENTS, INC.
P.O. BOX 373 • MICHIGAN CITY, INDIANA 46361 U.S.A.

Phone: 219/879-8000
Fax: 219/872-9057
Lit-by-Fax: 888/891-4963

www.dwyer-inst.com
e-mail: info@dwyer-inst.com

MAGNEHELIC® INSTALLATION

1. Select a location free from excessive vibration and where the ambient temperature will not exceed 140°F. Also, avoid direct sunlight which accelerates discoloration of the clear plastic cover. Sensing lines my be run any necessary distance. Long tubing lengths will not affect accuracy but will increase response time slightly. Do not restrict lines. If pulsating pressures or vibration cause excessive pointer oscillation, consult the factory for ways to provide additional damping.

2. All standard Magnehelic gages are calibrated with the diaphragm vertical and should be used in that position for maximum accuracy. If gages are to be used in other than vertical position, this should be specified on the order. Many higher range gages will perform within tolerance in other positions with only rezeroing. Low range Model 2000-00 and metric equivalents must be used in the vertical position only.

3. Surface Mounting

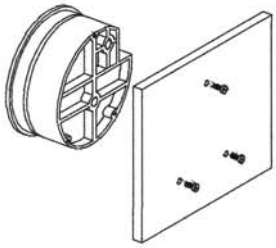

Locate mounting holes, 120° apart on a 4-1/8″ dia. circle. Use No. 6-32 machine screws of appropriate length.

4. Flush Mounting

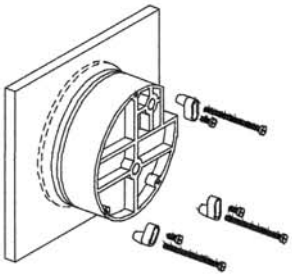

Provide a 4-9/16″ dia. opening in panel. Insert gage and secure in place with No. 6-32 machine screws of appropriate length, with adapters, firmly secured in place. To mount gage on 1-1/4″-2″ pipe, order optional A-610 pipe mounting kit.

5. To zero the gage after installation

Set the indicating pointer exactly on the zero mark, using the external zero adjust screw on the cover at the bottom. Note that the zero check or adjustment can only be made with the high and low pressure taps both open to atmosphere.

Operation

Positive Pressure: Connect tubing from source of pressure to either of the two high pressure ports. Plug the port not used. Vent one or both low pressure ports to atmosphere.

Negative Pressure: Connect tubing from source of vacuum or negative pressure to either of the two low pressure ports. Plug the port not used. Vent one or both high pressure ports to atmosphere.

Differential Pressure: Connect tubing from the greater of two pressure sources to either high pressure port and the lower to either low pressure port. Plug both unused ports.

When one side of the gage is vented in dirty, dusty atmosphere, we suggest an A-331 Filter Vent Plug be installed in the open port to keep inside of gage clean.

A. For portable use of temporary installation use 1/8″ pipe thread to rubber tubing adapter and connect to source of pressure with rubber or Tygon tubing.

B. For permanent installation, 1/4″ O.D., or larger, copper or aluminum tubing is recommended. See accessory bulletin S-101 for fittings.

Ordering Instructions:

When corresponding with the factory regarding Magnehelic® gage problems, be sure to include model number, pressure range, and any special options. Field repair is not recommended; contact the factory for repair service.

MAINTENANCE

Maintenance: No lubrication or periodic servicing is required. Keep case exterior and cover clean. Occasionally disconnect pressure lines to vent both sides of gage to atmosphere and re-zero. Optional vent valves, (bulletin S-101), should be used in permanent installations.

Calibration Check: Select a second gage or manometer of known accuracy and in an appropriate range. Using short lengths of rubber or vinyl tubing, connect the high pressure side of the Magnehelic gage and the test gage to two legs of a tee. Very slowly apply pressure through the third leg. Allow a few seconds for pressure to equalize, fluid to drain, etc., and compare readings. If accuracy unacceptable, gage may be returned to factory for recalibration. To calibrate in the field, use the following procedure.

Calibration:

1. With gage case, held firmly, loosen bezel, by turning counterclockwise. To avoid damage, a canvas strap wrench or similar tool should be used.
2. Lift out plastic cover and "O" ring.
3. Remove scale screws and scale assembly. Be careful not to damage pointer.
4. The calibration is changed by moving the clamp. Loosen the clamp screw(s) and move slightly toward the helix if gage is reading high, and away if reading low. Tighten clamp screw and install scale assembly.
5. Place cover and O-ring in position. Make sure the hex shaft on inside of cover is properly engaged in zero adjust screw.
6. Secure cover in place by screwing bezel down snug. Note that the area under the cover is pressurized in operation and therefore gage will leak if not properly tightened.
7. Zero gage and compare to test instrument. Make further adjustments as necessary.

Caution: If bezel binds when installing, lubricate threads sparingly with light oil or molybdenum disulphide compound.

Warning: Attempted field repair may void your warrenty. Recalibration or repair by the user is not recommended. For best results, return gage to the factory. Ship prepaid to:

Dwyer Instruments, Inc.

Attn: Repair Dept.

102 Indiana Highway 212

Michigan City, IN 46360

Trouble Shooting Tips:

•*Gage won't indicate or is sluggish.*

1. Duplicate pressure port not plugged.
2. Diaphragm ruptured due to overpressure.
3. Fittings or sensing lines blocked, pinched, or leaking.
4. Cover loose or "O"ring damaged, missing.
5. Pressure sensor, (static tips, Pitot tube, etc.) improperly located.
6. Ambient temperature too low. For operation below 20°F, order gage with low temperature, (LT) option.

•Pointer stuck-gage can't be zeroed.

1. Scale touching pointer.
2. Spring/magnet assembly shifted and touching helix.
3. **Metallic particles clinging to magnet and interfering with helix movement.**
4. Cover zero adjust shaft broken or not properly engaged in adjusting screw.

We generally recommend that gages needing repair be returned to the factory. Parts used in various sub-assemblies vary from one range of gage to another, and use of incorrect components may cause improper operation. After receipt and inspection, we will be happy to quote repair costs before proceeding.

Consult factory for assistance on unusual applications or conditions.

Use with air or compatible gases only.

©Copyright 2001 Dwyer Instruments, Inc.
Printed in U.S.A. 4/01 FR# 12-440212-00 Rev. 3

DWYER INSTRUMENTS, INC.
P.O. BOX 373 • MICHIGAN CITY, INDIANA 46361 U.S.A.
Phone: 219/879-8000
Fax: 219/872-9057
Lit-by-Fax: 888/891-4963
www.dwyer-inst.com
e-mail: info@dwyer-inst.com

Series DS

In-Line Flow Sensors

Use with the Dwyer Differential Pressure Gages or Transmitters

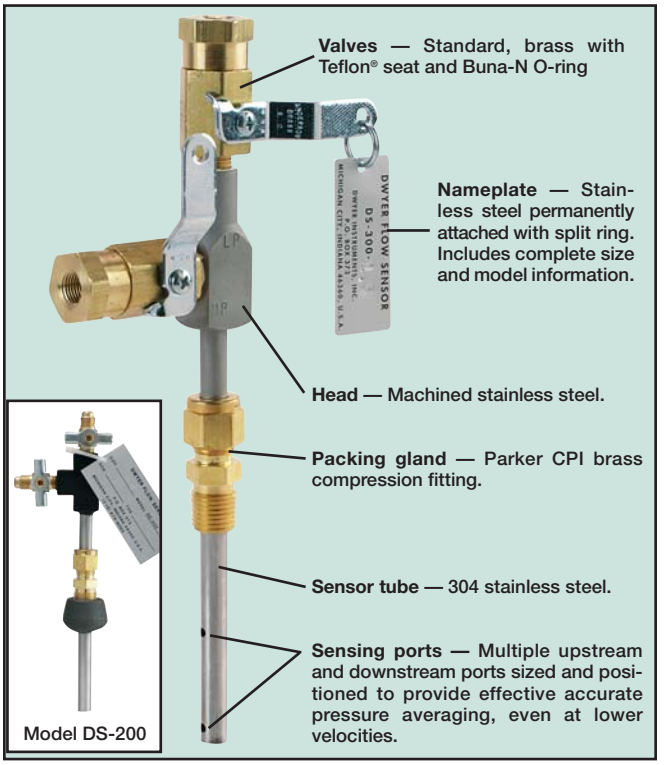

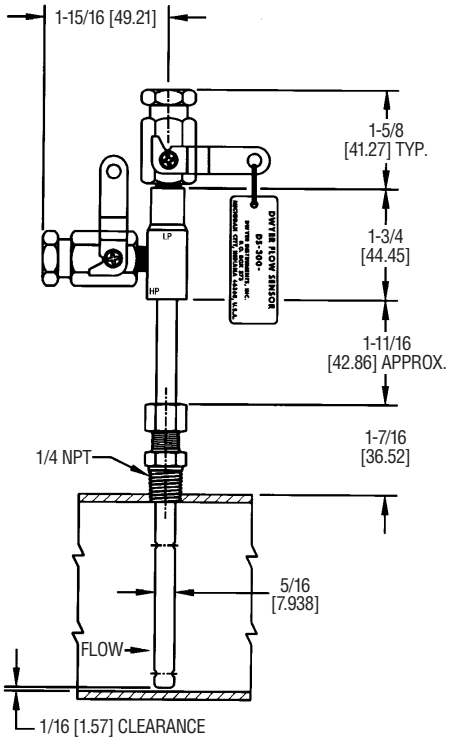

Dwyer Flow Sensors are averaging Pitot tubes that provide accurate and convenient flow rate sensing for schedule 40 pipe. When purchased with a Dwyer Capsuhelic® differential pressure gage of appropriate range, the result is a flow indicating system delivered off the shelf at an economical price.

Pitot tubes have been used in flow measurement for years. Conventional pitot tubes sense velocity pressure at only one point in the flowing stream. Therefore, a series of measurements must be taken across the stream to obtain a meaningful average flow rate. The Dwyer flow sensor eliminates the need for "traversing" the flowing stream because of its multiple sensing points and built-in averaging capability.

Series DS-200 models are available in ten insertion lengths from 1" - 10". Operation is similar to DS-300 units. Basic differences are the multi-turn shut-off valves, ⅜" NPT mounting and installed ¼" SAE 45˚ flared pressure connections.

Dwyer Series DS-300 flow sensors are designed to be inserted in the pipeline through a compression fitting. They are furnished with instrument shut-off valves on both pressure connections. Valves are fitted with ⅛" female NPT connections. Accessories include adapters with ¼" SAE 45° flared ends compatible with hoses supplied with the Model A-471 Portable Capsuhelic® kit. Standard valves are rated at 200 psig (13.7 bar) and 200°F (93.3°C). Where valves are not required, they can be omitted at reduced cost. Series DS-300 flow sensors are available for pipe sizes from 1" to 10".

DS-400 Averaging Flow Sensors are quality constructed from extra strong ¾" dia. stainless steel to resist increased forces encountered at higher flow rates with both air and water. This extra strength also allows them to be made in longer insertion lengths up to 24 inches (61 cm). All models include convenient and quick-acting quarter-turn ball valves to isolate the sensor for zeroing. Process connections to the valve assembly are ⅛" female NPT. A pair of ⅛" NPT × ¼" SAE 45° flared adapters are included, compatible with hoses used in the Model A-471 Portable Capsuhelic® Gage Kit. Supplied solid brass mounting adapter has a ¾" dia. compression fitting to lock in required insertion length and a ¾" male NPT thread for mounting in a thred-o-let (not included).

STOCKED MODELS in bold

— Select model with suffix which matches pipe size

DS-200-1"	**DS-300-1"**
DS-200-1¼"	**DS-300-1¼"**
DS-200-1½"	**DS-300-1½"**
DS-200-2"	**DS-300-2"**
DS-200-2½"	**DS-300-2½"**
DS-200-3"	**DS-300-3"**
DS-200-4"	**DS-300-4"**
DS-200-6"	**DS-300-6"**
DS-200-8"	**DS-300-8"**
DS-200-10"	**DS-300-10"**

DS-400-6"
DS-400-8"
DS-400-10"
DS-400-12"
DS-400-14"
DS-400-16"
DS-400-18"
DS-400-20"
DS-400-24"

Options and Accessories

A-160 Thredolet,⅜" NPT, forged steel, 3000 psi
A-161 Brass Bushing, ¼" x ⅜"
DS-200-VK Series DS Flow Sensors Valve Kit
Less Valves (DS-300) To order, add suffix -LV

How To Order

Merely determine the pipe size into which the flow sensor will be mounted and designate the size as a suffix to Model DS-300. For example, a flow sensor to be mounted in a 2" pipe would be a Model No. DS-300-2".

For non-critical water and air flow monitoring applications, the chart below can be utilized for ordering a stock Capsuhelic® differential pressure gage for use with the DS-300 flow sensor. Simply locate the maximum flow rate for the media being measured under the appropriate pipe size and read the Capsuhelic® gage range in inches of water column to the left. The DS-300 sensor is supplied with installation and operating instructions, Bulletin F-50. It also includes complete flow conversion information for the three media conditions shown in the chart below. This information enables the user to create a complete differential pressure to flow rate conversion table for the sensor and differential pressure gage employed. Both the Dwyer Capsuhelic® gage and flow sensor feature excellent repeatability so, once the desired flow rate is determined, deviation from that flow in quantitative measure can be easily determined. You may wish to order the adjustable signal flag option for the Capsuhelic® gage to provide an easily identified reference point for the proper flow.

Capsuhelic® gages with special ranges and/or direct reading scales in appropriate flow units are available on special order for more critical applications. Customer supplied data for the full scale flow (quantity and units) is required along with the differential pressure reading at that full flow figure. Prior to ordering a special Capsuhelic® differential pressure gage for flow read-out, we recommend you request Bulletin F-50 to obtain complete data on converting flow rates of various media to the sensor differential pressure output. With this bulletin and after making a few simple calculations, the exact range gage required can easily be determined.

Large 3/4 Inch Diameter for Extra Strength in Lengths to 24 Inches

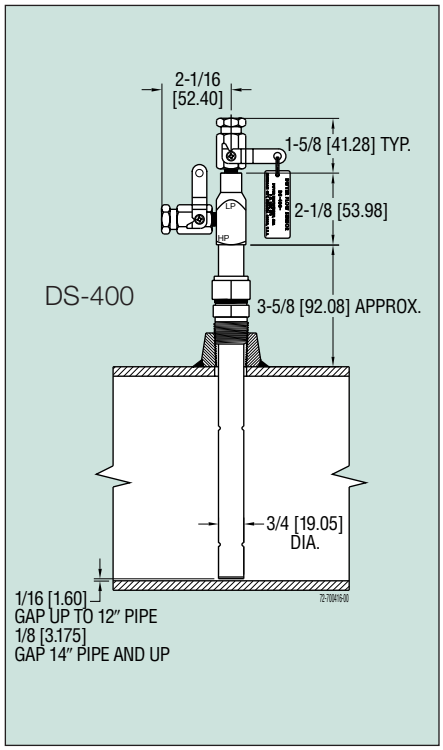

GAGE RANGE (IN. W.C.)	MEDIA @ 70°F	FULL RANGE FLOWS BY PIPE SIZE (APPROXIMATE)									
		1"	1¼"	1½"	2"	2½"	3"	4"	6"	8"	10"
2	Water (GPM) Air @ 14.7 PSIA (SCFM) Air @ 100 PSIG (SCFM)	4.8 19.0 50.0	8.3 33.0 90.5	11.5 42.0 120.0	20.5 65.0 210.0	30 113 325	49 183 510	86 360 920	205 760 2050	450 1140 3000	560 2130 6000
5	Water (GPM) Air @ 14.7 PSIA (SCFM) Air @ 100 PSIG (SCFM)	7.7 30.0 83.0	14.0 51.0 142.0	18.0 66.0 190.0	34.0 118.0 340.0	47 178 610	78 289 820	148 510 1600	320 1200 3300	760 2250 5000	890 3400 10000
10	Water (GPM) Air @ 14.7 PSIA (SCFM) Air @ 100 PSIG (SCFM)	11.0 41.0 120.0	19.0 72.0 205.0	25.5 93.0 275.0	45.5 163.0 470.0	67 250 740	110 410 1100	195 725 2000	450 1690 4600	1000 3440 8000	1260 4860 15000
25	Water (GPM) Air @ 14.7 PSIA (SCFM) Air @ 100 PSIG (SCFM)	18.0 63.0 185.0	32.0 112.0 325.0	40.5 155.0 430.0	72.0 255.0 760.0	108 390 1200	173 640 1800	310 1160 3300	720 2630 7200	1650 4760 13000	2000 7700 22000
50	Water (GPM) Air @ 14.7 PSIA (SCFM) Air @ 100 PSIG (SCFM)	25.0 90.0 260.0	44.0 161.0 460.0	57.5 205.0 620.0	100.0 360.0 1050.0	152 560 1700	247 900 2600	445 1600 4600	1000 3700 10000	1000 6000 18000	
100	Water (GPM) Air @ 14.7 PSIA (SCFM) Air @ 100 PSIG (SCFM)	36.5 135.0 370.0	62.0 230.0 660.0	82.0 300.0 870.0	142.0 505.0 1500.0	220 800 2300	350 1290 3600	600 2200 6500	1500 5000 15000		

Model A-471 Portable Kit

The Dwyer Series 4000 Capsuhelic® differential pressure gage is ideally suited for use as a read-out device with the DS-300 Flow Sensors. The gage may be used on system pressures of up to 500 PSIG even when the flow sensor differential pressure to be read is less than 0.5" w.c. With accuracy of ±3% of full scale, the Capsuhelic® gage can be used in ambient temperatures from 32 to 200°F (0 to 93.3°C). Zero and range adjustments are made from outside the gage. The standard gage with a die cast aluminum housing can be used with the flow sensor for air or oil applications. For water flow measurements, the optional forged brass housing should be specified. The Capsuhelic® gage may be panel or surface mounted and permanently plumbed to the flow sensor if desired. The optional A-610 pipe mounting bracket allows the gage to be easily attached to any 1¼" - 2" horizontal or vertical pipe.

For portable operation, the A-471 Capsuhelic® Portable Gage Kit is available complete with tough polypropylene carrying case, mounting bracket, 3-way manifold valve, two 10' high pressure hoses, and all necessary fittings. See pages 8 and 9 for complete information on the Capsuhelic® gage.

CAPSUHELIC® GAGE SHOWN INSTALLED IN A-471 PORTABLE KIT

Series DS

In-Line Flow Sensors

Use with the Dwyer Differential Pressure Gages or Transmitters

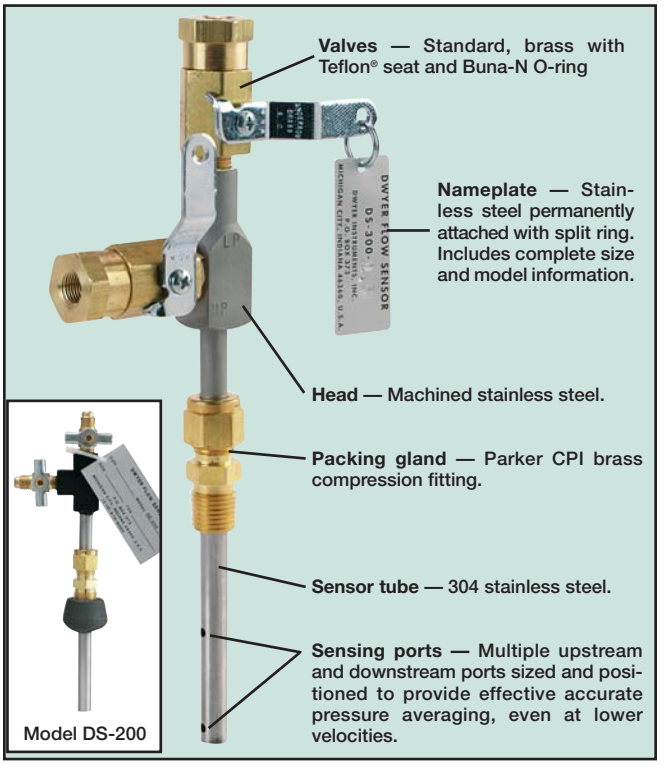

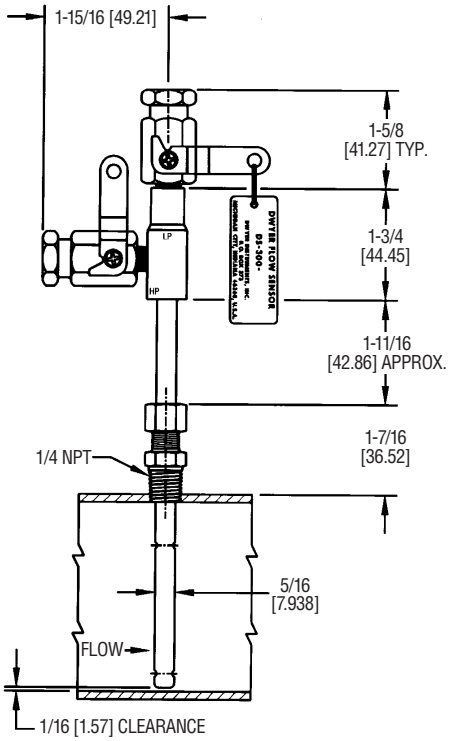

Dwyer Flow Sensors are averaging Pitot tubes that provide accurate and convenient flow rate sensing for schedule 40 pipe. When purchased with a Dwyer Capsuhelic® differential pressure gage of appropriate range, the result is a flow indicating system delivered off the shelf at an economical price.

Pitot tubes have been used in flow measurement for years. Conventional pitot tubes sense velocity pressure at only one point in the flowing stream. Therefore, a series of measurements must be taken across the stream to obtain a meaningful average flow rate. The Dwyer flow sensor eliminates the need for "traversing" the flowing stream because of its multiple sensing points and built-in averaging capability.

Series DS-200 models are available in ten insertion lengths from 1" - 10". Operation is similar to DS-300 units. Basic differences are the multi-turn shut-off valves, ⅜" NPT mounting and installed ¼" SAE 45˚ flared pressure connections.

Dwyer Series DS-300 flow sensors are designed to be inserted in the pipeline through a compression fitting. They are furnished with instrument shut-off valves on both pressure connections. Valves are fitted with ⅛" female NPT connections. Accessories include adapters with ¼" SAE 45° flared ends compatible with hoses supplied with the Model A-471 Portable Capsuhelic® kit. Standard valves are rated at 200 psig (13.7 bar) and 200°F (93.3°C). Where valves are not required, they can be omitted at reduced cost. Series DS-300 flow sensors are available for pipe sizes from 1" to 10".

DS-400 Averaging Flow Sensors are quality constructed from extra strong ¾" dia. stainless steel to resist increased forces encountered at higher flow rates with both air and water. This extra strength also allows them to be made in longer insertion lengths up to 24 inches (61 cm). All models include convenient and quick-acting quarter-turn ball valves to isolate the sensor for zeroing. Process connections to the valve assembly are ⅛" female NPT. A pair of ⅛" NPT × ¼" SAE 45° flared adapters are included, compatible with hoses used in the Model A-471 Portable Capsuhelic® Gage Kit. Supplied solid brass mounting adapter has a ¾" dia. compression fitting to lock in required insertion length and a ¾" male NPT thread for mounting in a thred-o-let (not included).

STOCKED MODELS in bold

— Select model with suffix which matches pipe size

DS-200-1"	**DS-300-1"**
DS-200-1¼"	**DS-300-1¼"**
DS-200-1½"	**DS-300-1½"**
DS-200-2"	**DS-300-2"**
DS-200-2½"	**DS-300-2½"**
DS-200-3"	**DS-300-3"**
DS-200-4"	**DS-300-4"**
DS-200-6"	**DS-300-6"**
DS-200-8"	**DS-300-8"**
DS-200-10"	**DS-300-10"**

DS-400-6"
DS-400-8"
DS-400-10"
DS-400-12"
DS-400-14"
DS-400-16"
DS-400-18"
DS-400-20"
DS-400-24"

Options and Accessories

A-160 Thredolet,⅜" NPT, forged steel, 3000 psi
A-161 Brass Bushing, ¼" x ⅜"
DS-200-VK Series DS Flow Sensors Valve Kit
Less Valves (DS-300) To order, add suffix -LV

How To Order

Merely determine the pipe size into which the flow sensor will be mounted and designate the size as a suffix to Model DS-300. For example, a flow sensor to be mounted in a 2" pipe would be a Model No. DS-300-2".

For non-critical water and air flow monitoring applications, the chart below can be utilized for ordering a stock Capsuhelic® differential pressure gage for use with the DS-300 flow sensor. Simply locate the maximum flow rate for the media being measured under the appropriate pipe size and read the Capsuhelic® gage range in inches of water column to the left. The DS-300 sensor is supplied with installation and operating instructions, Bulletin F-50. It also includes complete flow conversion information for the three media conditions shown in the chart below. This information enables the user to create a complete differential pressure to flow rate conversion table for the sensor and differential pressure gage employed. Both the Dwyer Capsuhelic® gage and flow sensor feature excellent repeatability so, once the desired flow rate is determined, deviation from that flow in quantitative measure can be easily determined. You may wish to order the adjustable signal flag option for the Capsuhelic® gage to provide an easily identified reference point for the proper flow.

Capsuhelic® gages with special ranges and/or direct reading scales in appropriate flow units are available on special order for more critical applications. Customer supplied data for the full scale flow (quantity and units) is required along with the differential pressure reading at that full flow figure. Prior to ordering a special Capsuhelic® differential pressure gage for flow read-out, we recommend you request Bulletin F-50 to obtain complete data on converting flow rates of various media to the sensor differential pressure output. With this bulletin and after making a few simple calculations, the exact range gage required can easily be determined.

Large 3/4 Inch Diameter for Extra Strength in Lengths to 24 Inches

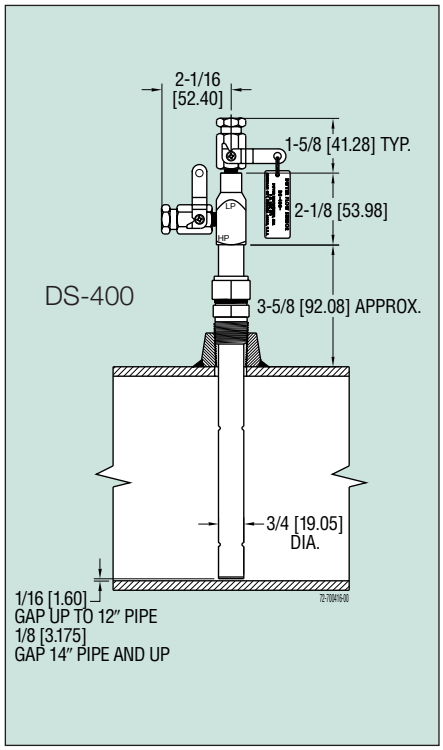

GAGE RANGE (IN. W.C.)	MEDIA @ 70°F	FULL RANGE FLOWS BY PIPE SIZE (APPROXIMATE)									
		1"	1¼"	1½"	2"	2½"	3"	4"	6"	8"	10"
2	Water (GPM) Air @ 14.7 PSIA (SCFM) Air @ 100 PSIG (SCFM)	4.8 19.0 50.0	8.3 33.0 90.5	11.5 42.0 120.0	20.5 65.0 210.0	30 113 325	49 183 510	86 330 920	205 760 2050	350 1340 3600	560 2130 6000
5	Water (GPM) Air @ 14.7 PSIA (SCFM) Air @ 100 PSIG (SCFM)	7.7 30.0 83.0	14.0 51.0 142.0	18.0 66.0 190.0	34.0 118.0 340.0	47 178 610	78 289 820	138 510 1600	320 1200 3300	560 2150 5700	890 3400 10000
10	Water (GPM) Air @ 14.7 PSIA (SCFM) Air @ 100 PSIG (SCFM)	11.0 41.0 120.0	19.0 72.0 205.0	25.5 93.0 275.0	45.5 163.0 470.0	67 250 740	110 410 1100	195 725 2000	450 1600 4600	800 3040 8100	1260 4860 15000
25	Water (GPM) Air @ 14.7 PSIA (SCFM) Air @ 100 PSIG (SCFM)	18.0 63.0 185.0	32.0 112.0 325.0	40.5 155.0 430.0	72.0 255.0 760.0	108 390 1200	173 640 1800	310 1130 3300	720 2630 7200	1250 4860 13000	2000 7700 22000
50	Water (GPM) Air @ 14.7 PSIA (SCFM) Air @ 100 PSIG (SCFM)	25.0 90.0 260.0	44.0 161.0 460.0	57.5 205.0 620.0	100.0 360.0 1050.0	152 560 1700	247 900 2600	435 1600 4600	1000 3700 10000	1800 6400 18500	
100	Water (GPM) Air @ 14.7 PSIA (SCFM) Air @ 100 PSIG (SCFM)	36.5 135.0 370.0	62.0 230.0 660.0	82.0 300.0 870.0	142.0 505.0 1500.0	220 800 2300	350 1290 3600	620 2290 6500	1500 5000 15000		

Model A-471 Portable Kit

The Dwyer Series 4000 Capsuhelic® differential pressure gage is ideally suited for use as a read-out device with the DS-300 Flow Sensors. The gage may be used on system pressures of up to 500 PSIG even when the flow sensor differential pressure to be read is less than 0.5" w.c. With accuracy of ±3% of full scale, the Capsuhelic® gage can be used in ambient temperatures from 32 to 200°F (0 to 93.3°C). Zero and range adjustments are made from outside the gage. The standard gage with a die cast aluminum housing can be used with the flow sensor for air or oil applications. For water flow measurements, the optional forged brass housing should be specified. The Capsuhelic® gage may be panel or surface mounted and permanently plumbed to the flow sensor if desired. The optional A-610 pipe mounting bracket allows the gage to be easily attached to any 1¼" - 2" horizontal or vertical pipe.

For portable operation, the A-471 Capsuhelic® Portable Gage Kit is available complete with tough polypropylene carrying case, mounting bracket, 3-way manifold valve, two 10' high pressure hoses, and all necessary fittings. See pages 8 and 9 for complete information on the Capsuhelic® gage.

CAPSUHELIC® GAGE SHOWN INSTALLED IN A-471 PORTABLE KIT

Series DS-300 Flow Sensors

Installation and Operating Instructions Flow Calculations

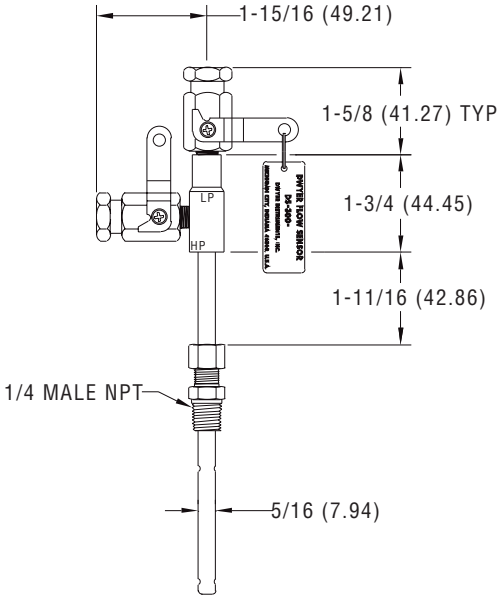

Series DS-300 Flow Sensors are averaging pitot tubes that provide accurate, convenient flow rate sensing. When purchased with a Dwyer Capsuhelic® for liquid flow or Magnehelic® for air flow, differential pressure gage of appropriate range, the result is a flow-indicating system delivered off the shelf at an economical price. Series DS-300 Flow Sensors are designed to be inserted in the pipeline through a compression fitting and are furnished with instrument shut-off valves on both pressure connections. Valves are fitted with 1/8″ female NPT connections. Accessories include adapters with 1/4″ SAE 45° flared ends compatible with hoses supplied with the Model A-471 Portable Capsuhelic® kit. Standard valves are rated at 200°F (93.3°C). Where valves are not required, they can be omitted at reduced cost. Series DS-300 Flow Sensors are available for pipe sizes from 1″ to 10″.

INSPECTION

Inspect sensor upon receipt of shipment to be certain it is as ordered and not damaged. If damaged, contact carrier.

INSTALLATION

General - The sensing ports of the flow sensor must be correctly positioned for measurement accuracy. The instrument connections on the sensor indicate correct positioning. The side connection is for total or high pressure and should be pointed upstream. The top connection is for static or low pressure.

Location - The sensor should be installed in the flowing line with as much straight run of pipe upstream as possible. A rule of thumb is to allow 10 - 15 pipe diameters upstream and 5 downstream. The table below lists recommended up and down piping.

PRESSURE AND TEMPERATURE

Maximum: 200 psig (13.78 bar) at 200°F (93.3°C).

Upstream and Downstream Dimensions in Terms of Internal Diameter of Pipe*			
Upstream Condition	Minimum Diameter of Straight Pipe		
	Upstream		Downstream
	In-Plane	Out of Plane	
One Elbow or Tee	7	9	5
Two 90° Bends in Same Plane	8	12	5
Two 90° Bends in Different Plane	18	24	5
Reducers or Expanders	8	8	5
All Valves**	24	24	5

* Values shown are recommended spacing, in terms of internal diameter for normal industrial metering requirements. For laboratory or high accuracy work, add 25% to values.

** Includes gate, globe, plug and other throttling valves that are only partially opened. If valve is to be fully open, use values for pipe size change. **CONTROL VALVES SHOULD BE LOCATED AFTER THE FLOW SENSOR.**

DWYER INSTRUMENTS, INC.
P.O. BOX 373 • MICHIGAN CITY, INDIANA 46361, U.S.A.
Phone: 219/879-8000 **www.dwyer-inst.com**
Fax: 219/872-9057 **e-mail: info@dwyer-inst.com**

POSITION

Be certain there is sufficient clearance between the mounting position and other pipes, walls, structures, etc, so that the sensor can be inserted through the mounting unit once the mounting unit has been installed onto the pipe.

Flow sensors should be positioned to keep air out of the instrument connecting lines on liquid flows and condensate out of the lines on gas flows. The easiest way to assure this is to install the sensor into the pipe so that air will bleed into, or condensate will drain back to, the pipe.

For Air or Gas Flow

Install in upper quadrant of pipe

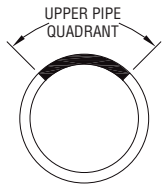

Condensate drains back to pipe

For Liquid or Steam Flow

Install in lower quadrant of pipe

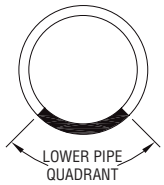

Air bleeds back to pipe

INSTALLATION

1. When using an A-160 thred-o-let, weld it to the pipe wall. If replacing a DS-200 unit, an A-161 bushing (1/4″ x 3/8″) will be needed.

2. Drill through center of the thred-o-let into the pipe with a drill that is slightly larger than the flow sensor diameter.

3. Install the packing gland using proper pipe sealant. If the packing gland is disassembled, note that the tapered end of the ferrule goes into the fitting body.

4. Insert sensor until it bottoms against opposite wall of the pipe, then withdraw 1/16″ to allow for thermal expansion.

5. Tighten packing gland nut finger tight. Then tighten nut with a wrench an additional 1-1/4 turns. Be sure to hold the sensor body with a second wrench to prevent the sensor from turning.

INSTRUMENT CONNECTION

Connect the slide pressure tap to the high pressure port of the Magnehelic® (air only) or Capsuhelic® gage or transmitting instrument and the top connection to the low pressure port.

See the connection schematics below.

Bleed air from instrument piping on liquid flows. Drain any condensate from the instrument piping on air and gas flows.

Open valves to instrument to place flow meter into service. For permanent installations, a 3-valve manifold is recommended to allow the gage to be zero checked without interrupting the flow. The Dwyer A-471 Portable Test Kit includes such a device.

Water Flow

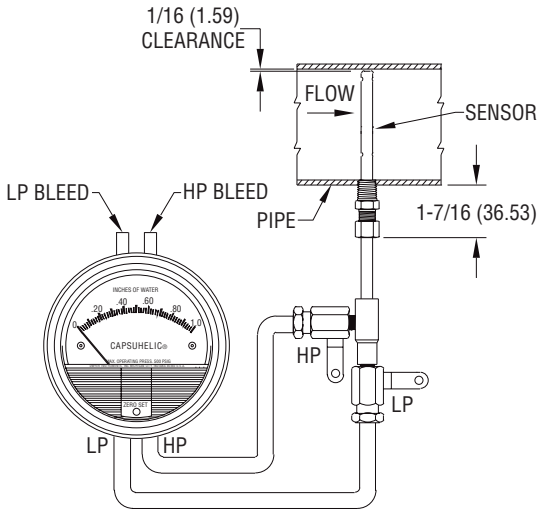

Air or Gas Flow

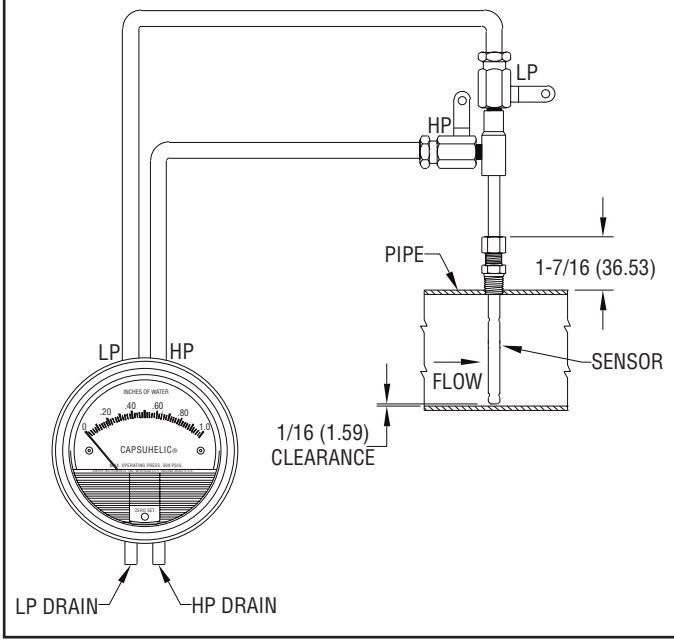

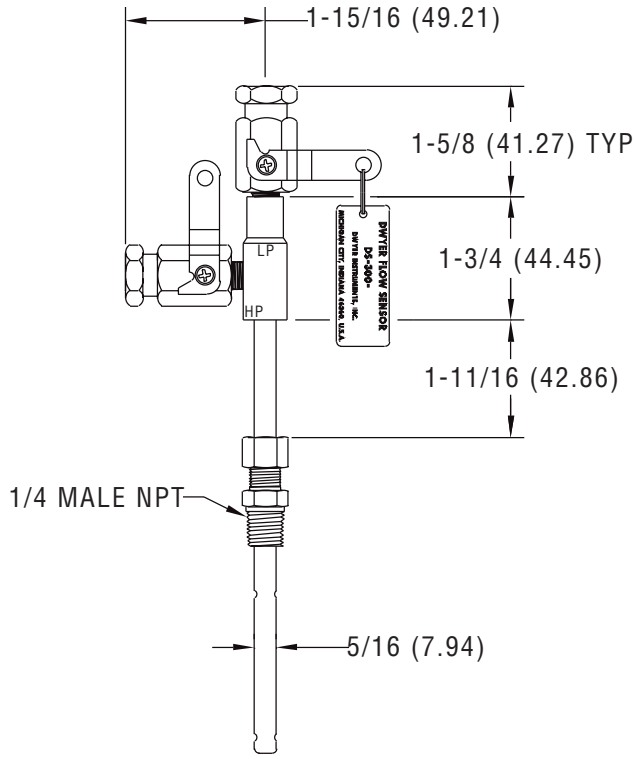

Flow Calculations and Charts

The following information contains tables and equations for determining the differential pressure developed by the DS-300 Flow Sensor for various flow rates of water, steam, air or other gases in different pipe sizes.

This information can be used to prepare conversion charts to translate the differential pressure readings being sensed into the equivalent flow rate. When direct readout of flow is required, use this information to calculate the full flow differential pressure in order to specify the exact range of Dwyer Magnehelic® or Capsuhelic® gage required. Special ranges and calculations are available for these gages at minimal extra cost. See bulletins A-30 and F-41 for additional information on Magnehelic® and Capsuhelic® gages and DS-300 flow sensors.

For additional useful information on making flow calculations, the following service is recommended: Crane Valve Co. Technical Paper No. 410 "Flow of Fluids Through Valves, Fittings and Pipe." It is available from Crane Valve Company, www.cranevalve.com.

Using the appropriate differential pressure equation from Page 4 of this bulletin,calculate the differential pressure generated by the sensor under normal operating conditions of the system. Check the chart below to determine if this value is within the recommended operating range for the sensor. Note that the data in this chart is limited to standard conditions of air at 60°F (15.6°C) and 14.7 psia static line pressure or water at 70°F (21.1°C). To determine recommended operating ranges of other gases, liquids an/or operating conditions, consult factory.

Note: the column on the right side of the chart which defines velocity ranges to avoid. Continuous operation within these ranges can result in damage to the flow sensor caused by excess vibration.

Pipe Size (Schedule 40)	Flow Coefficient "K"	Operating Ranges Air @ 60°F & 14.7 psia (D/P in. W.C.)	Operating Ranges Water @ 70°F (D/P in. W.C.)	Velocity Ranges Not Recommended (Feet per Second)
1	0.52	1.10 to 186	4.00 to 675	146 to 220
1-1/4	0.58	1.15 to 157	4.18 to 568	113 to 170
1-1/2	0.58	0.38 to 115	1.36 to 417	96 to 144
2	0.64	0.75 to 75	2.72 to 271	71 to 108
2-1/2	0.62	1.72 to 53	6.22 to 193	56 to 85
3	0.67	0.39 to 35	1.43 to 127	42 to 64
4	0.67	0.28 to 34	1.02 to 123	28 to 43
6	0.71	0.64 to 11	2.31 to 40	15 to 23
8	0.67	0.10 to 10	0.37 to 37	9.5 to 15
10	0.70	0.17 to 22	0.60 to 79	6.4 to 10

FLOW EQUATIONS

1. Any Liquid

$$Q\ (GPM) = 5.668 \times K \times D^2 \times \sqrt{\Delta P / S_f}$$

2. Steam or Any Gas

$$Q\ (lb/Hr) = 359.1 \times K \times D^2 \times \sqrt{p \times \Delta P}$$

3. Any Gas

$$Q\ (SCFM) = 128.8 \times K \times D^2 \times \sqrt{\frac{P \times \Delta P}{(T + 460) \times S_s}}$$

DIFFERENTIAL PRESSURE EQUATIONS

1. Any Liquid

$$\Delta P\ (in.\ WC) = \frac{Q^2 \times S_f}{K^2 \times D^4 \times 32.14}$$

2. Steam or Any Gas

$$\Delta P\ (in.\ WC) = \frac{Q^2}{K^2 \times D^4 \times p \times 128{,}900}$$

3. Any Gas

$$\Delta P\ (in.\ WC) = \frac{Q^2 \times S_s \times (T + 460)}{K^2 \times D^4 \times P \times 16{,}590}$$

Technical Notations

The following notations apply:

ΔP = Differential pressure expressed in inches of water column
Q = Flow expressed in GPM, SCFM, or PPH as shown in equation
K = Flow coefficient— See values tabulated on Pg. 3.
D = Inside diameter of line size expressed in inches.

For square or rectangular ducts, use: $D = \sqrt{\frac{4 \times \text{Height} \times \text{Width}}{\pi}}$

P = Static Line pressure (psia)
T = Temperature in degrees Fahrenheit (plus 460 = °Rankine)
p = Density of medium in pounds per square foot
S_f = Sp Gr at flowing conditions
S_s = Sp Gr at 60°F (15.6°C)

SCFM TO ACFM EQUATION

$$SCFM = ACFM \times \left(\frac{14.7 + PSIG}{14.7}\right) \left(\frac{520^*}{460 + °F}\right)$$

$$ACFM = SCFM \times \left(\frac{14.7}{14.7 + PSIG}\right) \left(\frac{460 + °F}{520}\right)$$

$$\text{POUNDS PER CUBIC FOOT STD.} = \text{POUNDS PER CUBIC FOOT ACT.} \times \left(\frac{14.7}{14.7 + PSIG}\right) \left(\frac{460 + °F}{520^*}\right)$$

$$\text{POUNDS PER CUBIC FOOT ACT.} = \text{POUNDS PER CUBIC FOOT STD.} \times \left(\frac{14.7 + PSIG}{14.7}\right) \left(\frac{520^*}{460 + °F}\right)$$

1 Cubic foot of air = 0.076 pounds per cubic foot at 60° F (15.6°C) and 14.7 psia.
* (520°= 460 + 60°) Std. Temp. Rankine

©Copyright 2004 Dwyer Instruments, Inc.
Printed in U.S.A. 7/04 FR# 72-440451-01 Rev. 2

DWYER INSTRUMENTS, INC.
P.O. BOX 373 • MICHIGAN CITY, INDIANA 46361, U.S.A.
Phone: 219/879-8000 www.dwyer-inst.com
Fax: 219/872-9057 e-mail: info@dwyer-inst.com

New Products New Products New Products New Products New Products

Series MS

Magnesense™ Differential Pressure Transmitter

Monitors Pressure & Air Velocity

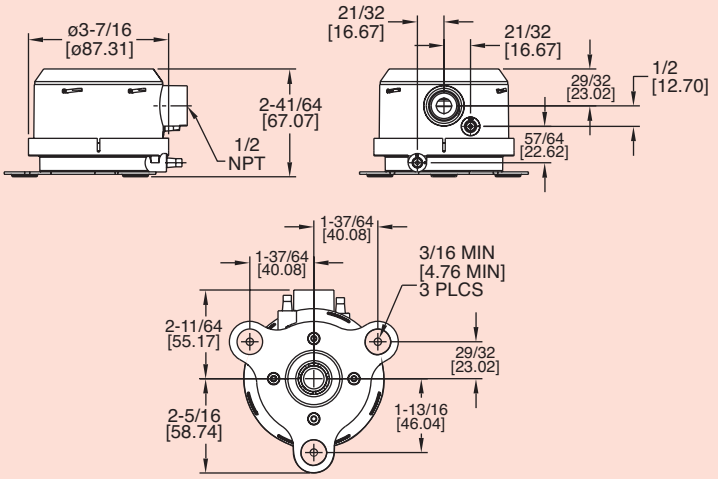

The Series MS Magnesense™ Differential Pressure Transmitter is an extremely versatile transmitter for monitoring pressure and air velocity. This compact package is loaded with features such as: field selectable English or metric ranges, field upgradeable LCD display, adjustable dampening of output signal (with optional display) and the ability to select a square root output for use with Pitot tubes and other similar flow sensors.

Along with these features, the magnetic sensing technology provides exceptional long term performance and enables the Magnesense™ to be the solution for a myriad of pressure and flow applications.

MODELS

Model Number	Output	Selectable Ranges
MS-121	4-20 mA	0.1″, 0.25″, 0.5″ (25, 50, 100 Pa)
MS-321	0-10 V	0.1″, 0.25″, 0.5″ (25, 50, 100 Pa)
MS-121-LCD	4-20 mA	0.1″, 0.25″, 0.5″ (25, 50, 100 Pa)
MS-321-LCD	0-10 V	0.1″, 0.25″, 0.5″ (25, 50, 100 Pa)
MS-111	4-20 mA	1″, 2″, 5″ (200, 500, 1000 Pa)
MS-111-LCD	4-20 mA	1″, 2″, 5″ (200, 500, 1000 Pa)

Accessories

A-435, Field Upgradeable LCD

SPECIFICATIONS

Service: Air and non-combustible, compatible gases.
Wetted Materials: Consult factory.
Accuracy: MS-X21: 0.5″ w.c. & 0.25″ w.c. ±1%, 0.1″ w.c. ±2%. 100 Pa & 50 Pa ±1%, 25 Pa ±2%. MS-X11: 5″ & 2″ ±1%, 1″ w.c. ±2%. 1000 & 500 Pa ±1%, 200 Pa ±2% (@ standard conditions).
Stability: ±1% F.S. / year.
Temperature Limits: 0 to 150°F (-18 to 66°C).
Pressure Limits: 1 psi maximum, operation; 10 psi, burst.
Power Requirements: 10 to 35 VDC (2-wire); 17 to 36 VDC or isolated 21.6 to 33 VAC (3-wire).
Output Signals: 4 to 20 mA (2-wire); 0 to 10 V (3-wire).
Response Time: Field adjustable 0.5 to 15 sec. time constant. Provides a 95% response time of 1.5 to 45 seconds.
Zero & Span Adjustments: Digital push button.
Loop Resistance: Current Output: 0-1250Ω max. Voltage Output: min. load resistance 1 k Ω.
Current Consumption: 40 mA max.
Display (optional): 4 digit LCD.
Electrical Connections:
4-20mA, 2-Wire: European Style Terminal Block for 16 to 26 AWG.
0-10V, 3-Wire: European Style Terminal Block 16 to 22 AWG.
Electrical Entry: 1/2″ NPS Thread.
Accessory: Cable Gland for 5 to 10 mm diameter cable.
Process Connections: 3/16″ (5 mm) ID tubing. Maximum OD 9 mm.
Enclosure Rating: NEMA 4X.
Mounting Orientation: Diaphragm in Vertical position.
Weight: 8.0 oz (230 g).
Agency Approvals: CE.

Series MS

Magnesense® Differential Pressure Transmitter

Monitors Pressure & Air Velocity

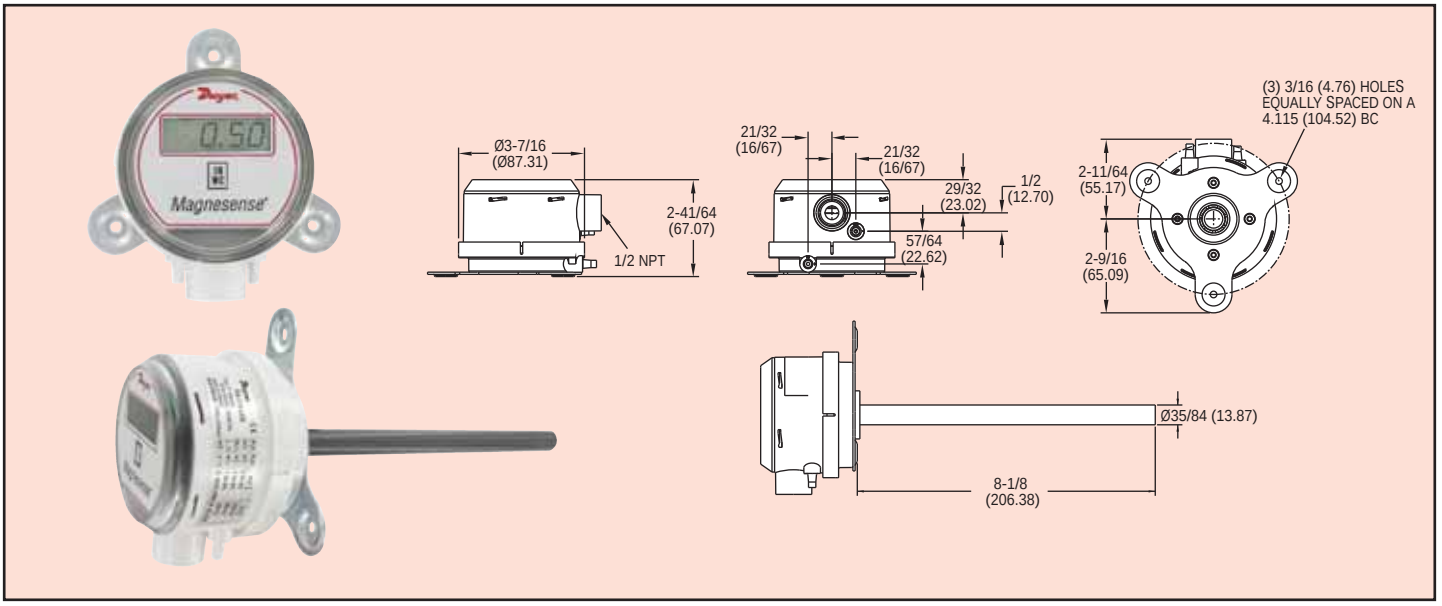

The Series MS Magnesense® Differential Pressure Transmitter is an extremely versatile transmitter for monitoring pressure and air velocity. This compact package is loaded with features such as:

- Field Selectable English or Metric Ranges
- Field Upgradeable LCD Display
- Adjustable Dampening of Output Signal (with Optional Display)
- Ability to Select a Square Root Output for Use with Pitot Tubes and Other Similar Flow Sensors

Along with these features, the patented magnetic sensing technology provides exceptional long term performance and enables the Magnesense® Differential Pressure Transmitter to be the single solution for your pressure and flow applications.

Model Number	Output	Selectable Ranges
MS-121*	4-20 mA	0.1˝, 0.25˝, 0.5˝ (25, 50, 100 Pa)
MS-321*	0-10 V	0.1˝, 0.25˝, 0.5˝ (25, 50, 100 Pa)
MS-111*	4-20 mA	1˝, 2˝, 5˝ (250, 500, 1250 Pa)
MS-311*	0-10 V	1˝, 2˝, 5˝ (250, 500, 1250 Pa)
MS-131	4-20 mA	10” w.c. (2 KPa)
MS-141	4-20 mA	15” w.c. (3 KPa)
MS-151	4-20 mA	25” w.c. (5 KPa)
MS-331	0-10 V	10” w.c. (2 KPa)
MS-341	0-10 V	15” w.c. (3 KPa)
MS-351	0-10 V	25” w.c. (5 KPa)
MS-021	4-20 mA	±0.1”, 0.25”,0.5” w.c. (±25, 50, 100 Pa)
MS-221	0-10 V	±0.1”, 0.25”,0.5” w.c. (±25, 50, 100 Pa)

NOTE: Add -LCD to end of model for units with display.
*Models available with duct mount static pressure probe. Change last digit from 1 to 2. Ex. MS-122

SPECIFICATIONS

Service: Air and non-combustible, compatible gases.
Wetted Materials: Consult factory.
Accuracy: ±1% for 0.25” (50 Pa), 0.5” (100 Pa), 2” (500 Pa), 5” (1250 Pa), 10” (2 kPa), 15” (3 kPa), 25” (5 kPa) ±2% for 0.1” (25 Pa), 1” (250 Pa) and all bi-directional ranges.
Stability: ±1% / year F.S.O.
Temperature Limits: 0 to 150°F (-18 to 66°C).
Pressure Limits: 1 psi maximum, operation; 10 psi, burst.
Power Requirements: 10 to 35 VDC (2-wire); 17 to 36 VDC or isolated 21.6 to 33 VAC (3-wire).
Output Signals: 4 to 20 mA (2-wire) or 0 to 10 V (3-wire).
Response Time: Adjustable 0.5 to 15 sec. time constant. Provides a 95% response time of 1.5 to 45 seconds.
Zero & Span Adjustments: Digital push button.
Loop Resistance: Current Output: 0-1250 Ω max; Voltage Output: min. load resistance 1 kΩ.
Current Consumption: 40 mA max.
Display (optional): 4 digit LCD.
Electrical Connections:
4-20 mA, 2-Wire: European Style
Terminal Block for 16 to 26 AWG.
0-10 V, 3-Wire: European Style
Terminal Block for 16 to 22 AWG.
Electrical Entry: 1/2” NPS Thread
Accessory (A-151): Cable Gland for 5 to 10 mm diameter cable.
Process Connections: 3/16” ID tubing (5 mm ID). Maximum OD 9 mm.
Enclosure Rating: NEMA 4X (IP65).
Mounting Orientation: Diaphragm in vertical position.
Weight: 8.0 oz (230 g).
Agency Approvals: CE.

ACCESSORY

A-435, Field Upgradeable LCD

Series MS Magnesense® Differential Pressure Transmitter

Specifications - Installation and Operating Instructions

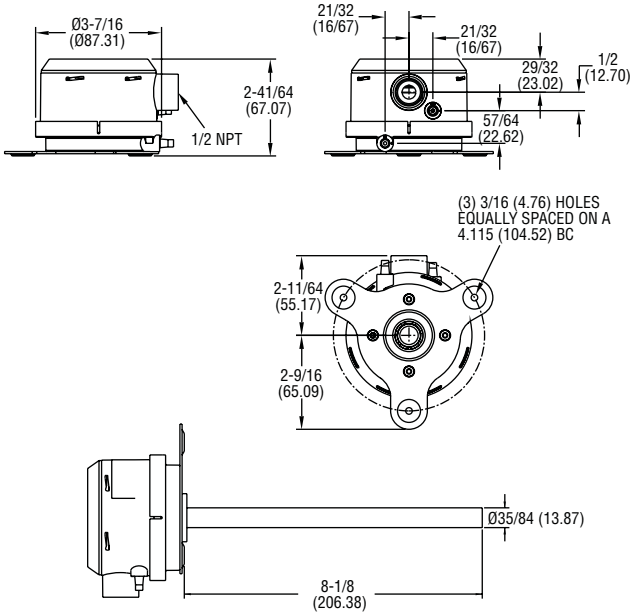

The Series MS Magnesense® Differential Pressure Transmitter is an extremely versatile transmitter for monitoring pressure and air velocity. This compact package is loaded with features such as: field selectable English or metric ranges, field upgradeable LCD display, adjustable dampening of output signal (with optional display) and the ability to select a square root output for use with Pitot tubes and other similar flow sensors. Along with these features, magnetic sensing technology provides exceptional long term performance and enables the Magnesense® to be the solution for a myriad of pressure and air flow applications.

INSTALLATION

Mounting:

The transmitter should be mounted on a vertical surface with the connections directed down to prevent moisture from entering either the pressure ports or the electrical cable entry. The diaphragm must be vertical to minimize gravity effects on the diaphragm.

Mount the transmitter using #8 x 1/2″ pan head sheet metal screws in the mounting flanges. Do not over tighten.

Duct Mount:

The transmitter should be mounted away from fans, corners, heating and cooling coils and other equipment that will effect the measurement of the pressure.

1. To mount the transmitter, drill a .562 (12.70) diameter hold into the duct.
2. Insert transmitter probe into the duct.
3. Mark location of three mounting holes on duct using mounting flange as template. Drill holes.
4. Attach mounting flange to duct with (3) #8 x 1/2 pan head sheet metal screws. Do not overtighten screws.

Electrical Connection:

2-Wire Operation:

CAUTION: DO NOT EXCEED SPECIFIED SUPPLY VOLTAGE RATINGS. PERMANENT DAMAGE NOT COVERED BY WARRANTY WILL RESULT. 2-WIRE UNITS ARE NOT DESIGNED FOR AC VOLTAGE OPERATION.

SPECIFICATIONS

Service: Air and non-combustible, compatible gases.
Wetted Materials: Consult Factory.
Accuracy: MS-X2X: 0.5″ w.c. & 0.25″ w.c. ±1%, 0.1″ w.c. ±2%. 100 Pa & 50 Pa ±1%, 25 Pa ±2%. MS-X1X: 5″ & 2″ ±1%, 1″ w.c. ±2%. 1250 & 500 Pa ±1%, 250 Pa ±2% (@ standard conditions).
Stability: ±1% F.S./ year.
Temperature Limits: 0 to 150°F (-18 to 66°C).
Pressure Limits: 1 psi maximum, operation; 10 psi, burst.
Power Requirements: 2-wire, 10 to 35 VDC; 3-wire, 17 to 36 VDC or isolated 21.6 to 33 VAC.
Output Signals: 2-wire, 4 to 20 mA; 3-wire, 0 to 10 V.
Response Time: Adjustable 0.5 to 15 sec. time constant. Provides a 95% response time of 1.5 to 45 seconds.
Zero & Span Adjustments: Digital push button.
Loop Resistance: Current Output: 0-1250 Ohm max. Voltage Output: min. load resistance 1 k OhmΩ.
Current Consumption: 40 mA max.
Display (optional): 4 digit LCD.
Electrical Connections: 4-20 mA Units: 2-Wire: European Style Terminal Block for 16 to 26 AWG; 0-10 V Units: 3-Wire: European Style Terminal Block 16 to 22 AWG.
Electrical Entry: 1/2″ NPS Thread.
Accessory: Cable Gland for 5 to 10 mm diameter cable.
Process Connections: 3/16″ (5 mm) ID tubing. Maximum OD 9 mm.
Enclosure Rating: NEMA 4X (IP65).
Mounting Orientation: Diaphragm in vertical position.
Weight: 8.0 oz (230 g).
Agency Approvals: CE.
The following standards were used for CE approval:

CENELEC EN 61000-4-2: 2001
CENELEC EN 61000-4-3: 2002
CENELEC EN 61000-4-4: 1995
CENELEC EN 61000-4-5: 2001
CENELEC EN 61000-4-6: 2003
CENELEC EN 61000-4-8: 2001
CENELEC EN 55011: 2003
CENELEC EN 61326: 2002
89/336/EED EMC Directive

DWYER INSTRUMENTS, INC.
P.O. Box 373 • Michigan City, IN 46361-0373, U.S.A.
Phone: 219/879-8000 **www.dwyer-inst.com**
Fax: 219/872-9057 **e-mail: info@dwyer-inst.com**

Electrical Connection:
2-Wire Operation, continued:

The connections to the transmitter are made through a two circuit European style terminal block TB1 located at the bottom left of the main PB board. Polarity is indicated by + and – signs on the P.C. board.

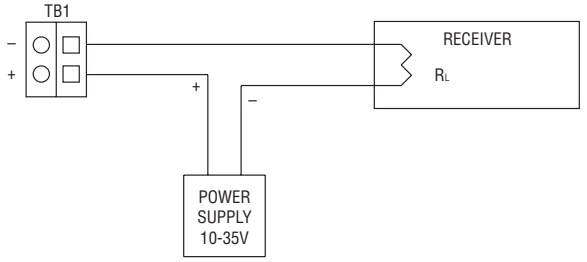

Figure 1

An external power supply delivering 10 to 35 VDC with a minimum current capability of 40 milliamps must be used to power the control loop in which the Magnesense® transmitter is connected. Refer to Fig. 1 for connection of the power supply, transmitter and receiver. The range of appropriate receiver load resistances (R_L) for the power supply voltage available is given by the formula and graph in Fig. 2. Shielded two wire cable is recommended for control loop wiring and the negative side of the loop may be grounded if desired. Note also that the receiver may be connected in either the negative or positive side of the loop, whichever is most convenient. Should polarity of the transmitter or receiver be inadvertently reversed, the loop will not function properly but no damage will be done to the transmitter.

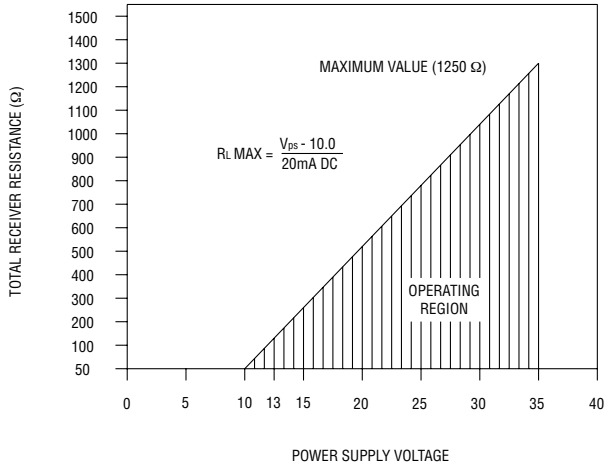

Figure 2

The maximum length of connecting wire between the transmitter and the receiver is a function of wire size and receiver resistance. That portion of the total current loop resistance represented by the resistance of the connecting wires themselves should not exceed 10% of the receiver resistance. For extremely long runs (over 1,000 feet), it is desirable to select receivers with higher resistances in order to keep the size and cost of the connecting leads as low as possible. In installations where the connecting run is no more than 100 feet, connecting lead wire as small as No. 22 Ga. can be used.

3-Wire Operation:

CAUTION: DO NOT EXCEED SPECIFIED SUPPLY VOLTAGE RATINGS. PERMANENT DAMAGE NOT COVERED BY WARRANTY WILL RESULT.

The connections to the transmitter are made through a three circuit European style terminal block. Connect the power and signal leads to the corresponding terminals as shown in Fig. 3. When using a DC supply, the positive of the supply should be connected to V+ and the negative connected to Com. Connecting the leads in reverse will not damage the device but it will not operate. The DC supply should be capable of providing 20 mA or more of current per Magnesense® transmitter.

When using an isolated AC supply, either leads of the supply may be connected to Com and V+. The input diode of the device half wave rectifies and filters the applied AC voltage. A small DC current of less than 20 mA is thus drawn through the transformer. The transformer used for the AC supply must be capable of handling this small DC current. Use a UL 1584 Class 2 rated transformer rated between 24 V and 30 VAC, 40 VA or larger, 50/60 Hz. UL 1584 Class 2 rated transformers are limited to 30 VAC maximum under any conditions at nominal line. The AC input voltage to the device is thus limited to a minimum of 21.6 at low line (24 V-10%) and 33 V at high line (30 V+10%).

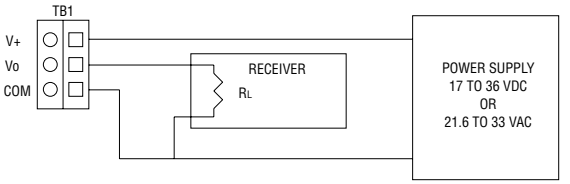

Figure 3

The output of Vo is 0 to 10 VDC. As much as 10 mA may be drawn from Vo without affecting accuracy. This limits the minimum load RL connected to Vo to 1 KΩ or higher. Remember to keep the wiring resistance between the output and the receiver R_L low compared to value of R_L. While the voltage at the terminals remains unchanged with a 10 mA current flow, resistive losses in the wiring do cause errors in the voltage delivered to R_L. For a 1% accurate gauge, a good rule of thumb would be to keep the resistance of the leads less than 0.1% of the value of R_L. This will keep the error caused by current flow below 0.1%.

To minimize noise in the signal use shielded cable. The common line may also be grounded.

Pressure Connections
Two integral tubing connectors are provided. They are designed to fit 3/16″ (5 mm) ID tubing. Connect the high pressure to the High side as shown in Fig. 4. Be sure the pressure ratings of the tubing exceed that of the operating ranges.

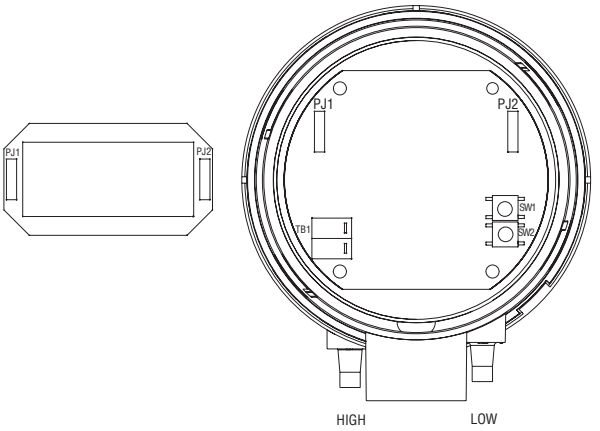

Figure 4

Select Operation Mode and Range:
The operating modes and ranges are controlled by two shorting jumpers on a pair of jumper blocks, PJ3 and PJ5. These two jumper blocks are shown in Fig. 5.

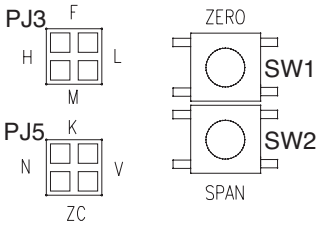

Figure 5, Mode and Range Programming Jumpers and Switches

Jumper block PJ3's primary function is to control when the unit is in the High, Medium or Low range. Each unit has three user selectable operating ranges for what input pressure corresponds to full scale of the analog output. When the left two pins on PJ3 next to the letter "H" are shorted together by the supplied shorting jumper, the device's full scale analog output corresponds to the highest pressure range of the unit. When the shorting jumper shorts the bottom two jumpers next to the letter "M" of PJ3, the full scale analog output corresponds to the middle range of the unit. Similarly the low range is selected by placing the shorting jumper on the pins of PJ3 next to the letter "L". The jumper for PJ3 is factory installed to the high range. If no jumper is installed on PJ3, the device defaults to the "H" range selection.

Jumper block PJ5's primary function is to control the operating mode. There are two operating modes, Normal and Velocity. The Normal operating mode provides for zero pressure to correspond to 0 V or 4 mA output. This mode is selected by placing the supplied shorting jumper for PJ5 on the pins next to the letter "N". The jumper for PJ5 is factory installed to the Normal Mode. If no jumper is installed on PJ5, the device defaults to the "N" selection.

The Velocity mode provides the ability for the unit in conjunction with a Pitot tube or similar flow sensor with known K factor to give a direct output in air velocity. This mode is selected by placing the supplied shorting jumper for PJ5 on the pins next to the letter "V". The Velocity Mode overrides the High, Middle, and Low range setting on PJ3 and forces the unit to the High range setting. If the optional display is present, this mode prompts the display to read in air velocity. The current or voltage output is modified such that full scale output is 4004* K* $\sqrt{(\Delta P)}$ feet per minute or its metric equivalent in meters per second depending upon which units are selected. The factory programming for the K factor is 1.00 but may be adjusted (see Adjust K Factor). The velocity displayed for the various models can be found in Table 1.

	Velocity Displayed	
Model	**English**	**Metric**
MS-X2X	K* 2830 fpm	K* 14.4 m/s
MS-X1X	K* 8950 fpm	K* 45.5 m/s

Table 1

SETUP

Set Measurement Units:
Magnesense™ transmitters can be easily set to operate in either English or metric units.

The programming jumper is PJ7 and is located in the upper half of the board and under the LCD display if the LCD is present. A representation of this jumper is shown in Fig. 6. English units are selected by placing the provided shorting jumper on the lower two pins of the block next to the label "H_2O". Metric units are selected by placing the provided shorting jumper on the upper two pins of the block next to the label "Pa". If no jumper is present English units are selected by default.

Figure 6, Measurement Units Programming Jumper

In addition to the obvious change in the scale of the LCD display, the full scale range and corresponding analog outputs are also affected by the measurement units selection. The analog output goes to full scale output (10 volts or 20 mA depending on model) of the selected range and units. See Table 2. For example on Model MS-X2X, when high range and English units are selected full scale output occurs at 0.5″ w.c. (124.5 Pa). When high range and metric units are selected, analog full scale output is at 100 Pa (0.4015″ w.c.).

FULL SCALE ANALOG OUTPUT

Model		Low	Medium	High
MS-X2X	English	0.1″ w.c.	0.25″ w.c.	0.5″ w.c.
	Metric	25 Pa	50 Pa	100 Pa
MS-X1X	English	1″ w.c.	2″ w.c.	5″ w.c.
	Metric	250 Pa	500 Pa	1250 Pa

Table 2

Install Optional Display:
The A-435 LCD conversion kit allows any non display model to have the LCD added at a later time. The kit contains an LCD display and replacement cover with LCD window. The optional display may be set to read pressure either in Inches Water Column or Pascal. The optional display can be also set to display air velocity in feet per minute or meters per second when used with a Pitot tube or similar flow sensor with a known K factor.

The optional display for the Magnesense® is mounted on the main board by connectors PJ1 and PJ2. The display is properly mounted when PJ1 and PJ2 on the display are connected to the corresponding PJ1 and PJ2 on the main board. See Fig. 4. Installing the display upside down causes no harm the display or the main board. The display just simply reads upside down.

When upgrading a Magnesense® transmitter with an A-435 display kit, it is important to note that it is possible for a device to have been user calibrated to appear properly calibrated at the analog output while in fact, it has been improperly calibrated. This can be done by improperly calibrating the analog output's zero and span and then using the pressure zero and span to compensate for the improperly calibrated analog output. This possibility can be eliminated by checking that the analog output's zero calibration is either 0 V or 4 mA and the analog output's full scale calibration is either 10 V or 20 mA output. See the User Calibration section for details on how to perform these tests.

Label Display (Optional):
The optional LCD display does not contain engineering unit indication. So that the display may be appropriately marked, four adhesive labels have been provided with the units. The unit labels are IN W.C., Pa, fpm, and M/S. Attach the appropriate provided units label above the display window on the cover of the device to indicate to which units the display has been set.

Adjust K Factor:
If the optional display is present, the K factor used in velocity measurements may be adjusted. This is done by activating the K factor adjustment function of the unit. To activate the K factor adjustment function, take the shorting jumper from programming block PJ5 and place it on the upper two terminals next to the letter “K”. See Fig. 5. The display will now show the programmed Pitot tube K factor. The K factor can be adjusted up and down by using the zero and span buttons as up and down buttons. Once the desired K factor has been set, replace the shorting jumper on PJ5 to its velocity position (“V”). The shorting jumper must not be left in the “K” position for proper operation of the unit. The factory setting for the K factor is 1.0 and it is adjustable from 0.5 to 3.

Adjust Filter Time Constant:
If the optional display is present, the dampening filter time constant of the output may be adjusted from 0.5 to 15 seconds in 1-second increments. In turbulent air, the pressure reading may be unstable. The dampening filter time constant is provided to reduce such noise. The time constant is the actual filter time constant, not averaging time. For an abrupt change in pressure it will take three time constants to reach 95% of the final value.

To activate the filter adjustment function, take the shorting jumper for programming block PJ3 and place it on the upper two terminals next to the letter “F”. See Fig. 5. The display will now show the filter time constant. The time constant can be adjusted up and down by using the zero and span buttons as up and down buttons. Once the desired time constant has been set, replace the shorting jumper on PJ3 to its original position. The shorting jumper must not be left in the “F” position for proper operation of the unit. The factory setting for the time constant of the filter is 0.5 Seconds.

USER CALIBRATION
The transmitter may be user calibrated. With the two buttons marked "Zero" and "Span" (see Fig. 5) four calibration coefficients may be altered: Pressure zero, Pressure span can be calibrated with the two buttons marked “zero” and “span” (see Fig. 5). Analog output zero, either 0 V or 4 mA, and Analog output Full Scale, either 10 V or 20 mA may be adjusted with two buttons marked “zero” and “span” in conjunction with jumper settings. Pressure and output are calibrated separately to ensure the displayed pressure is correct and the analog output has accurately calibrated end points. These calibration coefficients are stored in nonvolatile memory, which retains its content indefinitely without external power or batteries. Factory calibration may be easily restored.

To calibrate the transmitter you will need three pieces of equipment. First, you will need a calibrated pressure source capable of generating a stable pressure value for the maximum range of the unit under test. You will need a manometer or gage capable of validating the calibration pressure unless that is built into the pressure source. You will also need a voltmeter or milliammeter to calibrate the output. The transmitter is calibrated using the following procedure.

Preparation – Depending upon if it is a 2-wire or 3-wire system, connect the voltmeter or milliammeter and power supply, being careful to observe polarities. The transmitter must be calibrated in a vertical position.
Calibrating Pressure Zero – Leaving the hose barbs vented,press and hold the “Zero” switch for about 4-5 seconds. The zero point should now be set and if the display is present, the display will read zero. Calibrating pressure should begin with the zero then the span since the zero setpoint will affect the span value.

Span – PJ3 Jumper must be in “H” position to calibrate the span. Connect the pressure source and apply the high range rated pressure. When the pressure has stabilized, press and hold the “Span” switch for about 4-5 seconds. The display, if present, will now read the calibration pressure. Span may only be calibrated on the highest range for the unit.

Calibration of Analog Output – To adjust the analog output zero; set jumper settings PJ3 (F) and PJ5 (K) (see Fig. 5), “double click” the Zero switch. The zero switch must be pressed twice within about one second. “Double clicking” too fast may not be recognized. Depending upon the configuration the analog output should now read approximately either 0 V or 4 mA. This can be changed by pressing the “Zero” switch to decrease the reading or pressing span to increment the reading. Set the current output to 0.00 V or 4.000 mA. End the analog zero calibration mode by pressing “Span” and “Zero” switches simultaneously. The output should then vary with pressure.

The analog output’s zero and full scale settings do not interact so they may be performed in any order or only one may be adjusted. They are independent of pressure so no pressure source is required for output calibration.

Note: When the jumpers are in position (K) and (F) the pressure zero and pressure span calibration is not operative.

Analog Full Scale Calibration – To adjust the analog output span; set jumper settings PJ3 (F) and PJ5 (K) (see Fig. 5), With the voltmeter or milliammeter connected to the transmitter output, “double click” the “Span” switch as described above for the analog output zero calibration. The reading on the meter should now read about 10 V or 20 mA. Change this value by pressing the “Zero” switch for down and the “Span” switch for up as described above. When complete, press the “Zero” and “Span” switches simultaneously to return operation to normal. The analog output reading should now indicate the process value.
Note: When analog calibration is complete move the jumpers back to their appropriate position.

Restoring Factory Calibration Coefficients:
The user calibration does not affect the factory calibration coefficients. The factory defaults are easily restored if the user calibration must be "erased". Simultaneously press both the "Zero" and "Span" buttons and hold them for approximately 4-5 seconds. The factory calibration should now be restored.

MAINTENANCE
Annual recalibration is suggested. No lubrication or other periodic servicing is required. Keep exterior and cover clean. Occasionally disconnect pressure lines to vent both sides of gauge to atmosphere and re-zero. Do not use solvent to clean transmitter. Use only plastic compatible cleaners or water.

The Series MS is not field serviceable and should be returned if repair is needed (field repair should not be attempted and may void warranty). Be sure to include a brief description of the problem plus any relevant application notes. Contact customer service to receive a return goods authorization number before shipping.

©Copyright 2006 Dwyer Instruments, Inc. Printed in U.S.A. 6/06 FR# 01-443337-00 Rev. 3

DWYER INSTRUMENTS, INC.
P.O. Box 373 • Michigan City, IN 46361-0373, U.S.A.
Phone: 219/879-8000 **www.dwyer-inst.com**
Fax: 219/872-9057 **e-mail: info@dwyer-inst.com**

Series V4

FLOTECT® Vane Operated Flow Switch

Field Adjustable — Dependable Protection Against Flow Variation or Stopping in Pipelines for Fluids, Gases and Flowing Solids

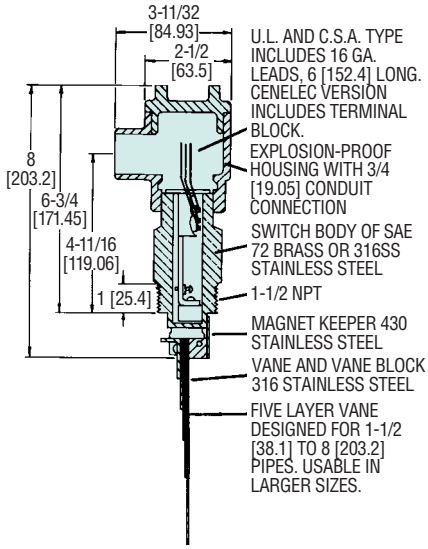

Rugged and reliable the Flotect® V4 flow switch operates automatically to protect equipment and pipeline systems against damage from reduction or loss of flow. The V4 is time tested being installed in thousands of pipelines and processing plants around the world. A unique magnetically actuated switching design gives superior performance. There are no bellows, springs, or seals to fail. Instead, a free-swinging vane attracts a magnet within the solid metal switch body, actuating a snap switch by means of a simple lever arm.

FEATURES

- Leak proof body machined from bar stock
- Choice of custom vane calibrated for your application, Model V4, or field adjustable multilayer vane, Model V4-2-U (see set point chart)
- Weatherproof, designed to meet NEMA 4
- Explosion-proof (listing included in specifications)
- Installs directly and easily into pipeline with a thredolet, tee, or flange (see application drawings)
- Can be used in pipes 1-1/2″ and up
- Electrical assembly can be easily replaced without removing the unit from installation so that the process does not have to be shut down
- High pressure rating of 1000 psig (69 bar) with the brass body and 2000 psig (138 bar) with the 316 SS body

APPLICATIONS

- Protects pumps, motors and other equipment against low or no flow
- Controls sequential operation of pumps
- Automatically starts auxiliary pumps and engines
- Stops liquid cooled engines, machines and processing when coolant flow is interrupted
- Shuts down burner when air flow through heating coil fails
- Controls dampers according to flow

SPECIFICATIONS

Service: Gases or liquids compatible with wetted materials.
Wetted Materials:
Vane: 316 SS.
Body: Brass or 316 SS standard.
Magnet Keeper: 430 SS standard, 316 SS optional.
Options: Other materials also available, consult factory (e.g. PVC, Hastelloy, Nickel, Monel, Titanium).
Temperature Limit: 275°F (135°C) standard, MT high temperature option 400°F (205°C) [MT option not UL, CSA, or SAA].
Pressure Limit: Brass body 1000 psig (69 bar), 316 SS body 2000 psig (138 bar), optional 5000 psig (345 bar) available with 316 SS body and SPDT switch only.
Enclosure Rating: Weatherproof and Explosion-proof. Listed with UL and CSA for Class I, Groups C and D; Class II, Groups E, F, and G. SAA: Exd IIB T6 (T amb = 75°C), Zone I. Also FM approved. ATEX pending.
Switch Type: SPDT snap switch standard, DPDT snap switch optional.
Electrical Rating: UL, FM and SAA models 10A @ 125/250 VAC. CSA models: 5A @ 125/250 VAC; 5A res., 3A ind. @ 30 VDC. MV option: 1A @125 VAC; 1A res., .5A ind. @ 30 VDC. MT option: 5A @ 125/250 VAC. [MT and MV option not UL, CSA, FM or SAA].
Electrical Connections: UL and CSA models: 16 AWG, 6″ (152 mm) long. SAA unit: Terminal block.
Conduit Connection: 3/4″ female NPT.
Process Connection: 1-1/2″ male NPT.
Mounting Orientation: Within 5° of vertical for proper operation. Units for horizontal installation (vertical pipe with up flow) available.
Set Point Adjustment: For universal vane: five vane combinations.
Weight: 4 lb 8 oz (1.9 kg).
Agency Approvals: UL, CSA, CE, FM and SAA. ATEX pending.

STOCKED MODELS in bold

Model	Description
V4-2-U	Brass body, universal vane
~~**V4-SS-2-U**~~	~~316SS* body, universal vane~~
~~**V4**~~	~~Brass body, custom vane~~
~~**V4-SS**~~	~~316SS* body, custom vane~~

*316SS body with 430SS magnet keeper. For 316SS magnet keeper, specify: add -316

Options (add as a suffix to the model number)**:**
-D, DPDT contacts.....
-MV, Gold Plated Contacts, options for dry circuits
(see electrical rating in specification, no listings or approvals).....
-MT, High Temperature, option rated 400° F (204° C)
(see electrical rating in specifications, no listings or approvals.....
-TRI (increasing flow), -TRD (decreasing flow), Time Delay Relay,
option with 2 SPDT contacts, adjustable from 0-1 to 0-31 minutes.
(no listings or approvals).....
-316, 316 SS Magnet Keeper, option to replace standard 430 SS.....
-CN, SAA, listed construction.....
-V, Vertical Up Flow, option for upward flow in vertical pipe.....

Consult factory for price and availability of fittings for V4 installation. Thredolets, bushings, and tees are available in a variety of sizes and materials.

For custom vane models, please supply factory with following information: pipe size, flow direction (horizontal, up), mounting, pressure, temperature, specific gravity, flow rates (maximum normal, actuation/deactuation*), etc.

*When both values are supplied, note which is critical.

Dwyer Instruments, Inc./P.O. Box 373/Michigan City, IN 46361/Phone 219 879-8000/Fax 219 872-9057 • U.K. Phone 44 1 494-461707 • Australia Phone 61 2 4272-2055

V4 Universal Vane Flow Charts

Values shown in both charts are nominal. If normal flows exceed actuation rates by less than 10%, custom vanes are recommended. Figures are based on standard vertical installation in a 1-1/2" thredolet in a horizontal run of pipe.

APPROXIMATE ACTUATION/DEACTUATION FLOW RATES FOR COLD WATER.
UPPER FIGURES IN GPM. LOWER FIGURES IN LPM

VANE LAYERS	1.5"PIPE	2"PIPE	3"PIPE	4"PIPE	6"PIPE	8"PIPE	10"PIPE	12"PIPE	14"PIPE	16"PIPE	18"PIPE	20"PIPE
1	7-3 26.67-11.67	15-8 56.7-30	45-22 167-83.3	95-40 367-150	210-120 [illegible]	375-175 1417-667	600-300 2267-1133	900-450 [illegible]	1200-600 4550-2267	1400-800 5300-3033	2000-1000 7567-3783	2400-1200 9083-4550
1&2		7-4 26.7-15	23-14 86.7-53.3	50-35 190-132	130-90 500-333	[illegible]	450-250 1700-950	650-350 2467-1317	900-500 3400-1900	1200-650 4550-2467	1450-800 5483-3033	1800-1000 6817-3783
1,2,&3			11-7 41.7-26.7	27-19 [illegible]	60-60 300-233	160-115 600-433	300-180 1133-683	[illegible] 1700-1033	600-350 2267-1317	750-450 2750-2083	1000-600 3783-2267	1200-700 4550-2650
1,2,3,&4				17-12 65-45	60-45 233-167	120-90 450-333	230-150 867-567	310-200 1167-750	430-280 1633-1067	550-360 [illegible]	700-450 2650-1700	850-550 3217-2083
1,2,3,4,&5					40-30 152-113	80-65 300-250	135-100 517-383	200-140 750-533	290-200 1100-750	360-250 1367-950	460-[illegible] 1733-1233	575-400 [illegible]-1517

Actuation rates are based on cold water at a specific gravity of 1.0. For fluids of different specific gravity, actuation rates may be approximated by dividing the rate shown by the square root of the specific gravity.

APPROXIMATE ACTUATION/DEACTUATION FLOW RATES FOR AIR.
UPPER FIGURES IN SCFM. LOWER FIGURES IN LPS

VANE LAYERS	1.5"PIPE	2"PIPE	3"PIPE	4"PIPE	6"PIPE	8"PIPE	10"PIPE	12"PIPE	14"PIPE	16"PIPE	18"PIPE	20"PIPE
1	32-17 15-8	65-32 30-20	210-105 100-50	400-200 190-90	950-475 450-220	1550-850 730-400	2400-1300 1100-600	3450-1900 1600-900	4700-2600 2200-1200	6400-3500 3000-1700	8000-4400 3800-2100	10000-5500 4700-2600
1&2		23-13 10-6	120-70 60-30	195-140 90-70	550-375 260-180	1100-700 520-330	1850-1200 870-570	2700-1750 1300-800	3400-2200 1600-1000	4800-3100 2300-1500	6000-3900 2800-1800	7400-4800 3500-2300
1,2,&3			60-48 30-20	135-100 60-50	375-265 180-130	725-500 340-240	1200-850 570-400	1850-1300 870-610	2600-1800 1200-800	3350-2350 1600-1100	4300-3000 2000-1400	5300-3700 2500-1700
1,2,3,&4				65-50 30-20	260-200 [illegible]	500-400 240-190	875-700 410-330	1250-1000 590-470	1900-1500 900-710	2500-2000 1200-900	3100-2500 1500-1200	3900-3100 1800-1500
1,2,3,4,&5					130-100 60-50	310-250 150-120	650-525 310-250	1000-800 470-380	1600-1250 760-590	2200-1750 1040-830	2800-2250 1300-1100	3550-2850 1700-1300

Actuation rates are based on air at standard conditions. For gases at other pressures, temperatures, or specific gravities, consult factory for equivalent flow approximations.

APPLICATION DRAWINGS FOR FLOTECT® AUTOMATIC FLOW SWITCHES

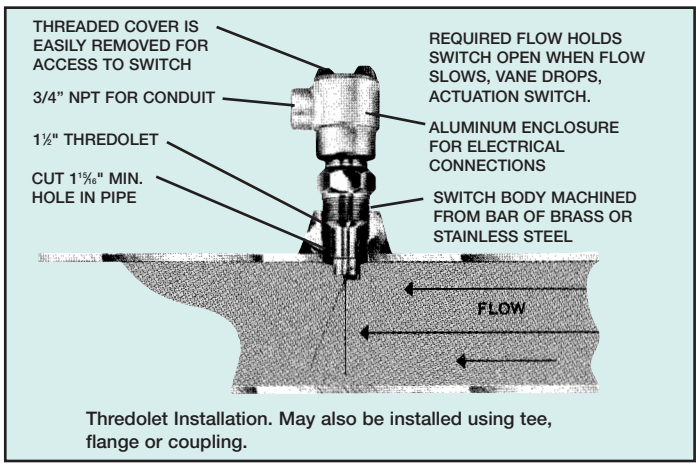

Thredolet Installation. May also be installed using tee, flange or coupling.

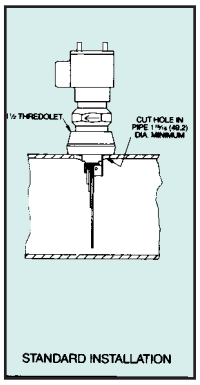

STANDARD INSTALLATION

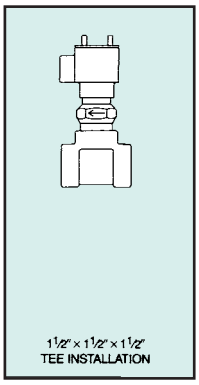

1½" × 1½" × 1½" TEE INSTALLATION

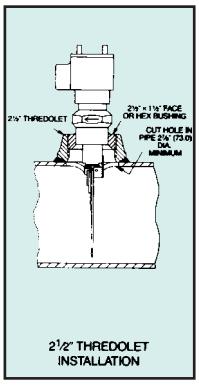

2½" THREDOLET INSTALLATION

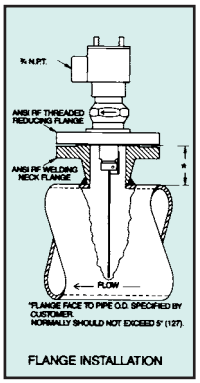

FLANGE INSTALLATION

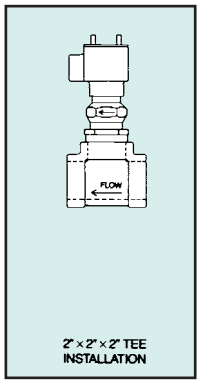

2" × 2" × 2" TEE INSTALLATION

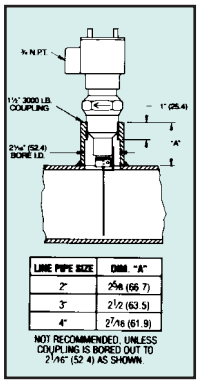

Series V4

FLOTECT® Vane Operated Flow Switch

Specifications - Installation and Operating Instructions

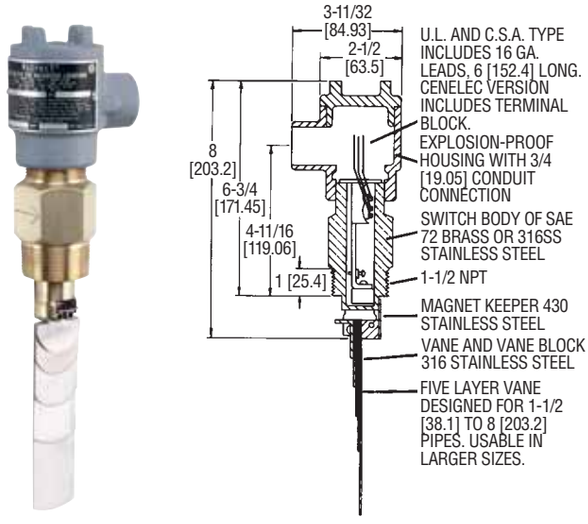

Rugged and reliable the Flotect® V4 flow switch operates automatically to protect equipment and pipeline systems against damage from reduction or loss of flow. The V4 is time tested being installed in thousands of pipelines and processing plants around the world. A unique magnetically actuated switching design gives superior performance. There are no bellows, springs, or seals to fail. Instead, a free-swinging vane attracts a magnet within the solid metal switch body, actuating a snap switch by means of a simple lever arm.

FEATURES

- Leak proof body machined from bar stock
- Choice of custom vane calibrated for your application, Model V4, or field adjustable multilayer vane, Model V4-2-U (see set point chart on page 4)
- Weatherproof, designed to meet NEMA 4
- Explosion-proof (listing included in specifications)
- Installs directly and easily into pipeline with a thredolet, tee, or flange (see application drawings on page 4)
- Can be used in pipes 1-1/2″ and up
- Electrical assembly can be easily replaced without removing the unit from installation so that the process does not have to be shut down
- High pressure rating of 1000 psig (69 bar) with the brass body and 2000 psig (138 bar) with the 316 SS body

APPLICATIONS

- Protects pumps, motors and other equipment against low or no flow
- Controls sequential operation of pumps
- Automatically starts auxiliary pumps and engines
- Stops liquid cooled engines, machines and processing when coolant flow is interrupted
- Shuts down burner when air flow through heating coil fails
- Controls dampers according to flow

SPECIFICATIONS

Service: Gases or liquids compatible with wetted materials.
Wetted Materials:
Vane: 316 SS
Body: Brass or 316 SS standard.
Magnet Keeper: 430 SS standard, 316 SS optional.
Options: Other materials also available, consult factory (e.g. PVC, Hastelloy, Nickel, Monel, Titanium).
Temperature Limit: -4 to 275°F (-20 to 135°C) standard, MT high temperature option 400°F (205°C) [MT option not UL, CSA, ATEX, or SAA].
Pressure Limit: Brass body 1000 psig (69 bar), 316 SS body 2000 psig (138 bar), optional 5000 psig (345 bar) available with 316 SS body and SPDT switch only.
Enclosure Rating: Weatherproof and Explosion-proof. Listed with UL and CSA for Class I, Groups C and D; Class II, Groups E, F, and G. ATEX CE 0344 Ex II 2 G EEx d IIB T6 -20°C≤Tamb≤75°C
EC-Type Certificate No.: KEMA 03ATEX 2383
SAA: Exd II C T6 (T amb=60°C).
Zone I. Also FM approved.
Switch Type: SPDT snap switch standard, DPDT snap switch optional.
Electrical Rating: UL, FM, ATEX and SAA models 10A @ 125/250 VAC (V~). CSA models: 5A @ 125/250 VAC (V~); 5A res., 3A ind. @ 30 VDC (V⎓). MV option: 1A @125 VAC (V~); 1A res., .5A ind. @ 30 VDC (V⎓). MT option: 5A @ 125/250 VAC (V~). [MT and MV option not UL, CSA, FM, ATEX or SAA].
Electrical Connections: UL and CSA models: 16 AWG, 6″ (152 mm) long. ATEX and SAA unit: Terminal block.
Conduit Connection: 3/4″ female NPT.
Process Connection: 1-1/2″ male NPT.
Mounting Orientation: Within 5° of vertical for proper operation. Units for horizontal installation (vertical pipe with up flow) available.
Set Point Adjustment: For universal vane: five vane combinations.
Weight: 4 lb 8 oz (1.9 kg).

Notes:

- Check all ratings given in the instructions and on the product to make sure that the product is suitable for your application. Do not exceed electrical ratings, pressure ratings, or temperature ratings of the product.
- Disconnect power supply before beginning installation to prevent possible equipment damage or electrical shock.

MAINTENANCE

Inspect and clean wetted parts at regular intervals. The cover should be in place at all times to protect the internal components from dirt, dust, and weather, and to maintain hazardous location ratings. Disconnect device from the supply circuit before opening to prevent ignition of hazardous atmosphere.

W.E. ANDERSON DIV., DWYER INSTRUMENTS, INC.
P.O. BOX 358 • MICHIGAN CITY, INDIANA 46361 U.S.A.
Phone: 219/879-8000
Fax: 219/872-9057
www.dwyer-inst.com
e-mail: info@dwyer-inst.com

Example	V4	SS	3	1	6	C	F	2	S	1	V4-SS-316-C-F2S1
Construction	V4										Brass Body, SPDT Switch
Construction Options		SS 2 D U									316 SS Body Type 2 Body Style DPDT Switch Universal Vane (Omit for a custom vane)
Magnet Keeper Material Options			1 2 3								430 SS (Standard) Nickel 200 316 SS
Vane Material Options				1 2 3 4 5							316 SS (Standard) Carpenter 20 Hastelloy B Hastelloy C Monel
Body Material Options					1 2 3 4 5 6 7						Brass (Standard) Carpenter 20 CPVC* Hastelloy B Hastelloy C 316 SS (Must also use SS construction selection) Monel
Other Options						AT SAA EPOXY FSV FTR HP HV MT MV NACE NB NH SW TBC TRD TRI V					ATEX SAA Construction* Epoxy Coated Housing Full Swing Vane Flow Test Report High Pressure*, 5000 psi (345 bar) (Only with SS body) Hinged Vane High Temperature* (See specifications for rating) Gold Contact Snap Switch* (See specifications for rating) NACE Heat Treated Body* Neoprene Boot* No Electrical Housing* Socket Weld Connection* Terminal Block Wire Connections* Time Delay Relay* (On flow decrease) Time Delay Relay* (On flow increase) Vertical Up Flow Applications
Flange*							F				Flange Process Connection
Flange Size								2 2.5 3 4			2″ 2-1/2″ 3″ 4″
Flange Material									C S M B H		Carbon Steel 316 SS Monel Hastelloy B Hastelloy C
Flange Rating										1 3 6 9	150# 300# 600# 900#
Bushing*							B				Bushing Process Connection
Bushing Size								1 2 4			2″ 2-1/2″ 4″
Bushing Type									H F		Hex Flush
Bushing Material										B C S 4	Brass Carbon Steel 316 SS 304 SS
Tee*							T				Tee Process Connection
Tee Size								1			1-1/2″
Tee with Bushing*							TB				Tee with Bushing Process Connection (Both same material)
Tee Size								2 3			2″ 3″
Tee Material and Type										B0 B1 B2 C CP S P	Brass 125 # Brass 150 # Brass 250 # Carbon Steel 2000 #(Only with 2″ and 3″) CPVC SCH 80 316 SS 150 # PVC SCH 80

* Options that do not have ATEX

Attention: Units without the "AT" suffix are not Directive 94/9/EC (ATEX) compliant. These units are not intended for use in potentially hazardous atmospheres in the EU. These units may be CE marked for other Directives of the EU.

INSTALLATION

1. Remove packing material from switch body-cap and remove tape from magnet keeper. Adjust vane length if necessary on multi-layer vanes only (see flow rate charts on next page). Install switch in thredolet previously welded to line. In some cases, it may be necessary to install the switch in a flange or tee (see installation drawings on next page). Note: extreme care must be exercised in welding the fitting to the line so that it is plumb and level.

   ADJUSTMENT OF MULTI-LAYER VANE
   Remove only those layers which are too long. Leave the smaller layers to reinforce the vane. The longest vane fits 6″ (150 mm) or larger pipe, the second longest vane fits 4″ (100mm) pipe, etc. Actuation-Deactuation rates are shown in the charts on the next page. To remove vane layers, proceed as follows:

   a. Remove the two screws and lockwashers holding the layers together. Do not lose these special corrosion resistant type 316 stainless steel screws and lockwashers.

   b. Remove the unwanted layers.

   c. Resecure the vane with the original two screws and lockwashers.

   d. With a hammer, lightly peen the ends of the screws so that they can't back out.

   e. If you lose the screws or lockwashers, don't replace with other parts which may corrode and break. That will void the warrantee and might cause severe damage to equipment located downstream of the switch.

   Note: Custom vane units have been calibrated at factory to meet requirements. Do not change.

2. The arrow on the side of the switch must point in the direction of flow.

3. Wiring: UL and CSA units only: thread connecting wires through conduit and connect. Wire in accordance with local electrical codes.
   Black - Common
   Blue - N.O.
   Red - N.C.

   Note: Double pole, double throw switches have dual black, blue and red leads. These are connected in the same manner as single pole, double throw switches, as described above.

   EC-Type Certificate Installation Instructions:
   Cable Connection
   The cable entry device shall be an EEx d certified cable gland suitable for conditions of use and correctly installed. The certified cable gland and cable shall be rated for a minimum temperature of 80°C.

   Conduit Connection
   An EEx d certified seal device such as a conduit seal with setting compound suitable for conditions of use and correctly installed shall be provided immediately to the entrance of the electrical housing. The certified conduit seal with setting compound and cable shall be rated for a minimum temperature of 80°C.

   Note: The switch is deactivated and contacts are in normal condition when there is no flow in the line.

4. Make sure conduit or cable are properly sealed. Electrical components must be kept free of moisture, including condensation, at all times. **CAUTION:** To prevent ignition of hazardous atmosphere, disconnect the device from the supply circuit before opening. Keep assembly tightly closed when in operation.

   Note: ATEX units only: The temperature class is determined by the maximum ambient or medium/process temperature. The approved ratings are: T6 -20°C≤Tamb≤75°C. Product may be used in a maximum ambient or medium/process temperature of 75°C.

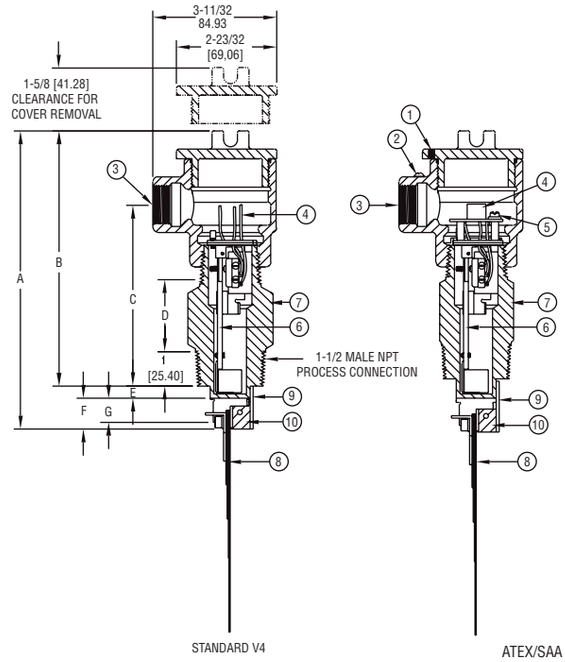

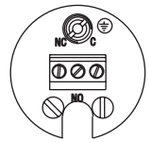

TERMINAL CONNECTIONS SPDT

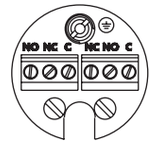

TERMINAL CONNECTIONS DPDT

Dim	V4 in(mm)	V4-2 in(mm)
A	8-3/16 (207.96)	8 (203.20)
B	6 (152.40)	6-3/4 (171.45)
C	4-11/16 (119.06)	3-15/16 (100.01)
D	1 (25.40)	1-3/4 (44.45)
E	1-5/16 (33.34)	9/16 (14.30)
F	7/8 (22.23)	11/16 (17.63)
G	11/16 (17.46)	1/2 (12.70)

Ref #	Standard V4	ATEX/SAA
1	N/A	Cover lock.
2	N/A	External ground.
3	Explosion-proof housing with 3/4″ female NPT conduit connection.	Explosion-proof housing with 3/4″ female NPT conduit connection.
4	16 AWG, 6″ (152 mm) long.	Terminal Block
5	Internal	Internal ground.
6	Magnet arm and switch assembly.	Magnet arm and switch assembly.
7	Switch body of SAE 72 Brass or 316 Stainless Steel.	Switch body of SAE 72 Brass or 316 Stainless Steel.
8	Five layer vane, 316 Stainless Steel, Designed for 1/2″ to 8″ pipes. Usable in larger pipe sizes.	Five layer vane, 316 Stainless Steel, Designed for 1/2″ to 8″ pipes. Usable in larger pipe sizes.
9	Magnet keeper of 430 Stainless Steel.	Magnet keeper of 430 Stainless Steel.
10	Vane block of 316 Stainless Steel.	Vane block of 316 Stainless Steel.

V4 Universal Vane Flow Charts

Values shown in both charts are nominal. If normal flows exceed actuation rates by less than 10%, custom vanes are recommended. Figures are based on standard vertical installation in a 1-1/2" thredolet in a horizontal run of pipe.

APPROXIMATE ACTUATION/DEACTUATION FLOW RATES FOR COLD WATER.
UPPER FIGURES IN GPM. LOWER FIGURES IN LPM

VANE LAYERS	1.5"PIPE	2"PIPE	3"PIPE	4"PIPE	6"PIPE	8"PIPE	10"PIPE	12"PIPE	14"PIPE	16"PIPE	18"PIPE	20"PIPE
1	7-3 26.67-11.67	15-8 56.7-30	45-22 167-83.3	95-40 367-150	210-120 800-450	375-175 1417-667	600-300 2267-1133	900-450 3400-1700	1200-600 4550-2267	1400-800 5300-3033	2000-1000 7567-3783	2400-1200 9083-4550
1&2		7-4 26.7-15	23-14 86.7-53.3	50-35 190-132	130-90 500-333	230-150 867-567	450-250 1700-950	650-350 2467-1317	900-500 3400-1900	1200-650 4550-2467	1450-800 5483-3033	1800-1000 6817-3783
1,2,&3			11-7 41.7-26.7	27-19 102-71.7	80-60 300-233	160-115 600-433	300-180 1133-683	450-275 1700-1033	600-350 2267-1317	750-450 2750-2083	1000-600 3783-2267	1200-700 4550-2650
1,2,3,&4				17-12 65-45	60-45 233-167	120-90 450-333	230-150 867-567	310-200 1167-750	430-280 1633-1067	550-360 2083-1367	700-450 2650-1700	850-550 3217-2083
1,2,3,4,& 5					40-30 152-113	80-65 300-250	135-100 517-383	200-140 750-533	290-200 1100-750	360-250 1367-950	460-325 1733-1233	575-400 2183-1517

Actuation rates are based on cold water at a specific gravity of 1.0. For fluids of different specific gravity, actuation rates may be approximated by dividing the rate shown by the square root of the specific gravity.

APPROXIMATE ACTUATION/DEACTUATION FLOW RATES FOR AIR.
UPPER FIGURES IN SCFM. LOWER FIGURES IN LPS

VANE LAYERS	1.5"PIPE	2"PIPE	3"PIPE	4"PIPE	6"PIPE	8"PIPE	10"PIPE	12"PIPE	14"PIPE	16"PIPE	18"PIPE	20"PIPE
1	32-17 15-8	65-32 30-20	210-105 100-50	400-200 190-90	950-475 450-220	1550-850 730-400	2400-1300 1100-600	3450-1900 1600-900	4700-2600 2200-1200	6400-3500 3000-1700	8000-4400 3800-2100	10000-5500 4700-2600
1&2		23-13 10-6	120-70 60-30	195-140 90-70	550-375 260-180	1100-700 520-330	1850-1200 870-570	2700-1750 1300-800	3400-2200 1600-1000	4800-3100 2300-1500	6000-3900 2800-1800	7400-4800 3500-2300
1,2,&3			60-48 30-20	135-100 60-50	375-265 180-130	725-500 340-240	1200-850 570-400	1850-1300 870-610	2600-1800 1200-800	3350-2350 1600-1100	4300-3000 2000-1400	5300-3700 2500-1700
1,2,3,&4				65-50 30-20	260-200 120-90	500-400 240-190	875-700 410-330	1250-1000 590-470	1900-1500 900-710	2500-2000 1200-900	3100-2500 1500-1200	3900-3100 1800-1500
1,2,3,4,& 5					130-100 60-50	310-250 150-120	650-525 310-250	1000-800 470-380	1600-1250 760-590	2200-1750 1040-830	2800-2250 1300-1100	3550-2850 1700-1300

Actuation rates are based on air at standard conditions. For gases at other pressures, temperatures, or specific gravities, consult factory for equivalent flow approximations.

APPLICATION DRAWINGS FOR FLOTECT® AUTOMATIC FLOW SWITCHES

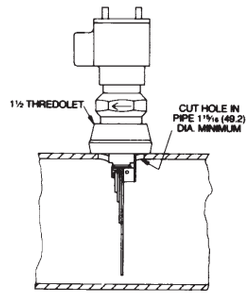

Standard Installation

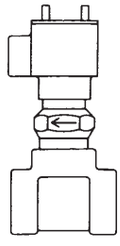

1-1/2″ X 1-1/2″ X 1-1/2″ Tee Installation

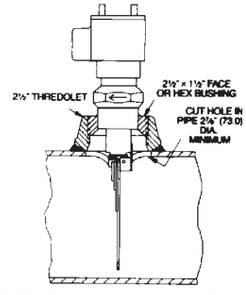

2-1/2″ Thredolet Installation

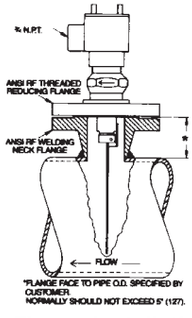

Flange Installation

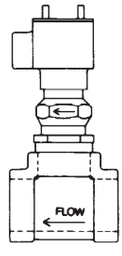

2″ X 2″ X 2″ Tee Installation

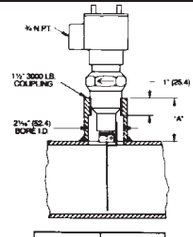

LINE PIPE SIZE	DIM. "A"
2"	2 5/8 (66.7)
3"	2 1/2 (63.5)
4"	2 7/16 (61.9)

NOT RECOMMENDED, UNLESS COUPLING IS BORED OUT TO 2 1/16" (52.4) AS SHOWN

W.E. ANDERSON DIV., DWYER INSTRUMENTS, INC.
P.O. BOX 358 • MICHIGAN CITY, INDIANA 46361 U.S.A.
Phone: 219/879-8000
Fax: 219/872-9057
www.dwyer-inst.com
e-mail: info@dwyer-inst.com

Series DS

In-Line Flow Sensors

Use with the Dwyer Differential Pressure Gages or Transmitters

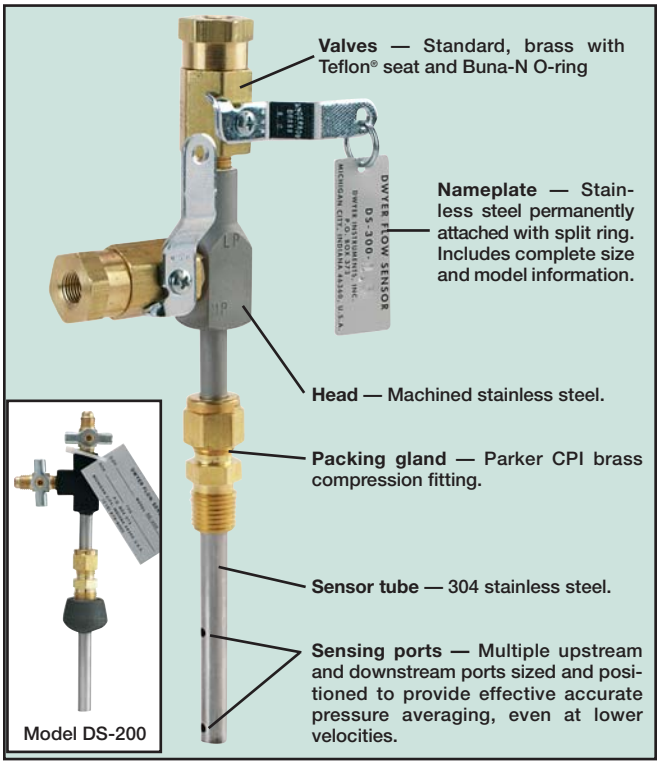

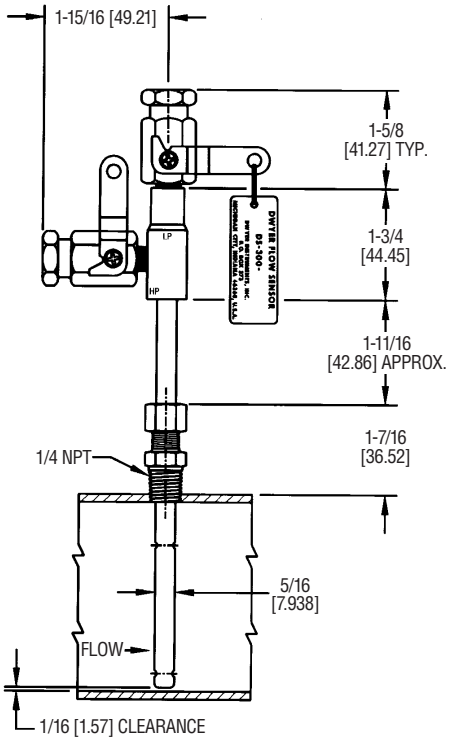

Dwyer Flow Sensors are averaging Pitot tubes that provide accurate and convenient flow rate sensing for schedule 40 pipe. When purchased with a Dwyer Capsuhelic® differential pressure gage of appropriate range, the result is a flow indicating system delivered off the shelf at an economical price.

Pitot tubes have been used in flow measurement for years. Conventional pitot tubes sense velocity pressure at only one point in the flowing stream. Therefore, a series of measurements must be taken across the stream to obtain a meaningful average flow rate. The Dwyer flow sensor eliminates the need for "traversing" the flowing stream because of its multiple sensing points and built-in averaging capability.

Series DS-200 models are available in ten insertion lengths from 1" - 10". Operation is similar to DS-300 units. Basic differences are the multi-turn shut-off valves, ⅜" NPT mounting and installed ¼" SAE 45˚ flared pressure connections.

Dwyer Series DS-300 flow sensors are designed to be inserted in the pipeline through a compression fitting. They are furnished with instrument shut-off valves on both pressure connections. Valves are fitted with ⅛" female NPT connections. Accessories include adapters with ¼" SAE 45° flared ends compatible with hoses supplied with the Model A-471 Portable Capsuhelic® kit. Standard valves are rated at 200 psig (13.7 bar) and 200°F (93.3°C). Where valves are not required, they can be omitted at reduced cost. Series DS-300 flow sensors are available for pipe sizes from 1" to 10".

DS-400 Averaging Flow Sensors are quality constructed from extra strong ¾" dia. stainless steel to resist increased forces encountered at higher flow rates with both air and water. This extra strength also allows them to be made in longer insertion lengths up to 24 inches (61 cm). All models include convenient and quick-acting quarter-turn ball valves to isolate the sensor for zeroing. Process connections to the valve assembly are ⅛" female NPT. A pair of ⅛" NPT × ¼" SAE 45° flared adapters are included, compatible with hoses used in the Model A-471 Portable Capsuhelic® Gage Kit. Supplied solid brass mounting adapter has a ¾" dia. compression fitting to lock in required insertion length and a ¾" male NPT thread for mounting in a thred-o-let (not included).

STOCKED MODELS in bold

— Select model with suffix which matches pipe size

DS-200-1"	**DS-300-1"**
DS-200-1¼"	**DS-300-1¼"**
DS-200-1½"	**DS-300-1½"**
DS-200-2"	**DS-300-2"**
DS-200-2½"	**DS-300-2½"**
DS-200-3"	**DS-300-3"**
DS-200-4"	**DS-300-4"**
DS-200-6"	**DS-300-6"**
DS-200-8"	**DS-300-8"**
DS-200-10"	**DS-300-10"**

DS-400-6"
DS-400-8"
DS-400-10"
DS-400-12"
DS-400-14"
DS-400-16"
DS-400-18"
DS-400-20"
DS-400-24"

Options and Accessories

A-160 Thredolet,⅜" NPT, forged steel, 3000 psi
A-161 Brass Bushing, ¼" x ⅜"
DS-200-VK Series DS Flow Sensors Valve Kit
Less Valves (DS-300) To order, add suffix -LV

How To Order

Merely determine the pipe size into which the flow sensor will be mounted and designate the size as a suffix to Model DS-300. For example, a flow sensor to be mounted in a 2" pipe would be a Model No. DS-300-2".

For non-critical water and air flow monitoring applications, the chart below can be utilized for ordering a stock Capsuhelic® differential pressure gage for use with the DS-300 flow sensor. Simply locate the maximum flow rate for the media being measured under the appropriate pipe size and read the Capsuhelic® gage range in inches of water column to the left. The DS-300 sensor is supplied with installation and operating instructions, Bulletin F-50. It also includes complete flow conversion information for the three media conditions shown in the chart below. This information enables the user to create a complete differential pressure to flow rate conversion table for the sensor and differential pressure gage employed. Both the Dwyer Capsuhelic® gage and flow sensor feature excellent repeatability so, once the desired flow rate is determined, deviation from that flow in quantitative measure can be easily determined. You may wish to order the adjustable signal flag option for the Capsuhelic® gage to provide an easily identified reference point for the proper flow.

Capsuhelic® gages with special ranges and/or direct reading scales in appropriate flow units are available on special order for more critical applications. Customer supplied data for the full scale flow (quantity and units) is required along with the differential pressure reading at that full flow figure. Prior to ordering a special Capsuhelic® differential pressure gage for flow read-out, we recommend you request Bulletin F-50 to obtain complete data on converting flow rates of various media to the sensor differential pressure output. With this bulletin and after making a few simple calculations, the exact range gage required can easily be determined.

Large 3/4 Inch Diameter for Extra Strength in Lengths to 24 Inches

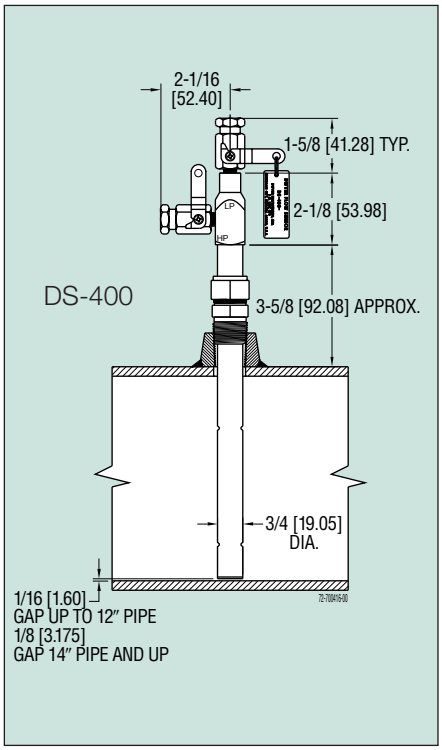

GAGE RANGE (IN. W.C.)	MEDIA @ 70°F	FULL RANGE FLOWS BY PIPE SIZE (APPROXIMATE)									
		1"	1¼"	1½"	2"	2½"	3"	4"	6"	8"	10"
2	Water (GPM)	4.8	8.3	11.5	20.5	30	49	86	205	350	560
	Air @ 14.7 PSIA (SCFM)	19.0	33.0	42.0	65.0	113	183	330	760	1340	2130
	Air @ 100 PSIG (SCFM)	50.0	90.5	120.0	210.0	325	510	920	2050	3600	6000
5	Water (GPM)	7.7	14.0	18.0	34.0	47	78	138	320	560	890
	Air @ 14.7 PSIA (SCFM)	30.0	51.0	66.0	118.0	178	289	510	1200	2150	3400
	Air @ 100 PSIG (SCFM)	83.0	142.0	190.0	340.0	610	820	1600	3300	5700	10000
10	Water (GPM)	11.0	19.0	25.5	45.5	67	110	195	450	800	1260
	Air @ 14.7 PSIA (SCFM)	41.0	72.0	93.0	163.0	250	410	725	1690	3040	4860
	Air @ 100 PSIG (SCFM)	120.0	205.0	275.0	470.0	740	1100	2000	4600	8100	15000
25	Water (GPM)	18.0	32.0	40.5	72.0	108	173	310	720	1250	2000
	Air @ 14.7 PSIA (SCFM)	63.0	112.0	155.0	255.0	390	640	1130	2630	4860	7700
	Air @ 100 PSIG (SCFM)	185.0	325.0	430.0	760.0	1200	1800	3300	7200	13000	22000
50	Water (GPM)	25.0	44.0	57.5	100.0	152	247	435	1000	1800	
	Air @ 14.7 PSIA (SCFM)	90.0	161.0	205.0	360.0	560	900	1600	3700	6400	
	Air @ 100 PSIG (SCFM)	260.0	460.0	620.0	1050.0	1700	2600	4600	10000	18500	
100	Water (GPM)	36.5	62.0	82.0	142.0	220	350	620	1500		
	Air @ 14.7 PSIA (SCFM)	135.0	230.0	300.0	505.0	800	1290	2290	5000		
	Air @ 100 PSIG (SCFM)	370.0	660.0	870.0	1500.0	2300	3600	6500	15000		

Model A-471 Portable Kit

The Dwyer Series 4000 Capsuhelic® differential pressure gage is ideally suited for use as a read-out device with the DS-300 Flow Sensors. The gage may be used on system pressures of up to 500 PSIG even when the flow sensor differential pressure to be read is less than 0.5" w.c. With accuracy of ±3% of full scale, the Capsuhelic® gage can be used in ambient temperatures from 32 to 200°F (0 to 93.3°C). Zero and range adjustments are made from outside the gage. The standard gage with a die cast aluminum housing can be used with the flow sensor for air or oil applications. For water flow measurements, the optional forged brass housing should be specified. The Capsuhelic® gage may be panel or surface mounted and permanently plumbed to the flow sensor if desired. The optional A-610 pipe mounting bracket allows the gage to be easily attached to any 1¼" - 2" horizontal or vertical pipe.

For portable operation, the A-471 Capsuhelic® Portable Gage Kit is available complete with tough polypropylene carrying case, mounting bracket, 3-way manifold valve, two 10' high pressure hoses, and all necessary fittings. See pages 8 and 9 for complete information on the Capsuhelic® gage.

CAPSUHELIC® GAGE SHOWN INSTALLED IN A-471 PORTABLE KIT

SERIES DS-400 FLOW SENSORS

Installation and Operating Instructions, Flow Calculations

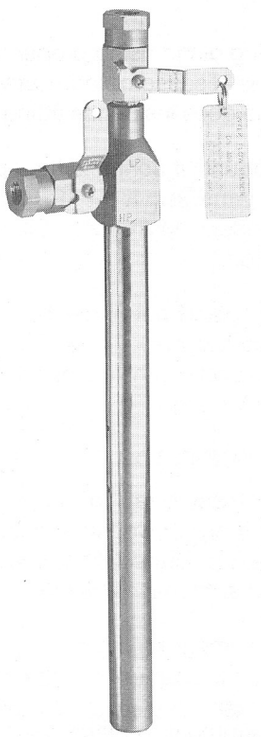

INSPECTION

Inspect the sensor upon receipt of shipment to be certain it is as ordered and not damaged. If damaged, contact carrier.

INSTALLATION

General – The sensing ports of the flow sensor must be correctly positioned for measurement accuracy. The instrument connections on the sensor indicate correct positioning. The side connection is for total or high pressure and should be pointed upstream. The top connection is for static or low pressure.

Location – The sensor should be installed in the flowing line with as much straight run of pipe upstream as possible. This will provide a flow profile as ideal as possible. A rule of thumb is to allow 10-15 pipe diameters upstream and 5 down. The table below lists recommended up and down piping:

PRESSURE AND TEMPERATURE

Maximum 200 psig at 200°F.

UPSTREAM AND DOWNSTREAM DIMENSIONS IN TERMS OF INTERNAL DIAMETER OF PIPE

*SEE NOTE #1

UPSTREAM CONDITION	MINIMUM DIAMETER OF STRAIGHT PIPE		
	UPSTREAM		DOWNSTREAM
	IN-PLANE	OUT-OF-PLANE	
One Elbow or Tee	7	9	5
Two 90° Bends in Same Plane	8	12	5
Two 90° Bends in Different Plane	18	24	5
Reducers or Expanders	8	8	5
All Valves *See Note 2	24	24	5

*Note #1: Values shown are recommended spacing, in terms of internal diameter for normal industrial metering requirements. For laboratory or high accuracy work, add 25% to values.

*Note #2: Includes gate, globe, plug and other throttling valves that are only partially opened. If valve is to be fully open, use values for pipe size change. CONTROL VALVES SHOULD BE LOCATED AFTER THE FLOW SENSOR.

DWYER INSTRUMENTS, INC.
P.O. BOX 373 • MICHIGAN CITY, INDIANA 46361, U.S.A.
Telephone 219/879-8000
Fax 219/872-9057

POSITION

Be certain there is sufficient clearance between the mounting position and other pipes, walls, structures, etc, so that the sensor can be inserted through the mounting unit once the mounting unit has been installed onto the pipe.

Flow Sensors should be positioned to keep air out of the instrument connecting lines on liquid flows and condensate out of the lines on gas flows. The easiest way to assure this is to install the sensor into the pipe so that air will bleed into, or condensate will drain back to, the pipe.

For air or gas flow:
Install in upper quadrant of pipe

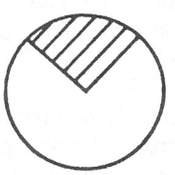

Condensate drains back to pipe

For liquid or steam flow:
Install in lower quadrant of pipe

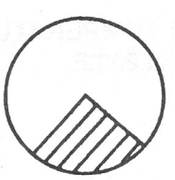

Air bleeds back to pipe.

INSTALLATION

1. Attach a ¾″ NPT female fitting, such as a thred-o-let or saddle clamp, to the piping in which flow will be measured. Note the required upstream and downstream conditions on page one which should be observed.

2. Drill a hole through the center of the attached fitting into the pipe with a bit that is slightly larger than the flow sensor diameter.

3. Install the packing gland using proper pipe sealant. If the packing gland is disassembled, note that the tapered end of the ferrule goes inside the fitting body.

4. Insert the sensor until it contacts the opposite wall of the pipe and then withdraw it 1⁄16″ for models -6 through -12 or ⅛″ for models -14 through -24. This is to allow for thermal expansion.

5. Tighten packing gland nut finger tight. Then tighten the nut with a wrench an additional 1¼ turns. Be sure to hold the sensor body with a second wrench to prevent the sensor from turning.

INSTRUMENT CONNECTION

Connect the side pressure tap to the high pressure port of the Magnehelic (air only) or Capsuhelic gage or transmitting instrument and the top connection to the low pressure port. See the connection schematics below.

Bleed air from instrument piping on liquid flows. Drain any condensate from the instrument piping on air and gas flows.

Open valves to instrument to place flow meter into service. For permanent installations, a 3-valve manifold is recommended to allow the gage to be zero checked without interrupting the flow. The Dwyer A-471 Portable Test Kit includes such a device.

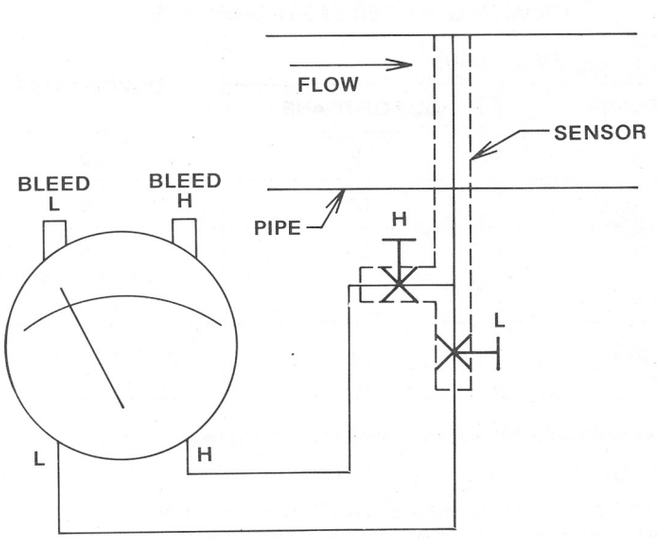

WATER FLOW

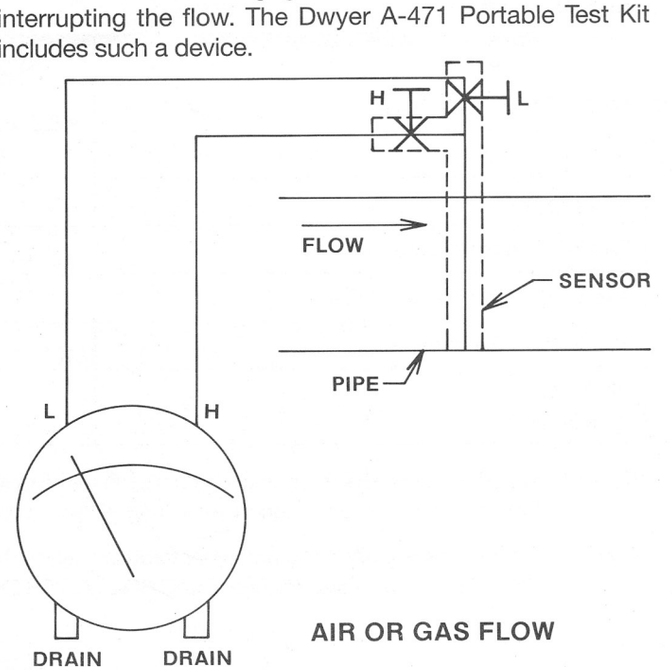

AIR OR GAS FLOW

DWYER INSTRUMENTS, INC.
P.O. Box 373, Michigan City, Indiana 46361, U.S.A.
Phone: 219/879-8000 Fax: 219/872-9057

SERIES DS-400 FLOW SENSORS

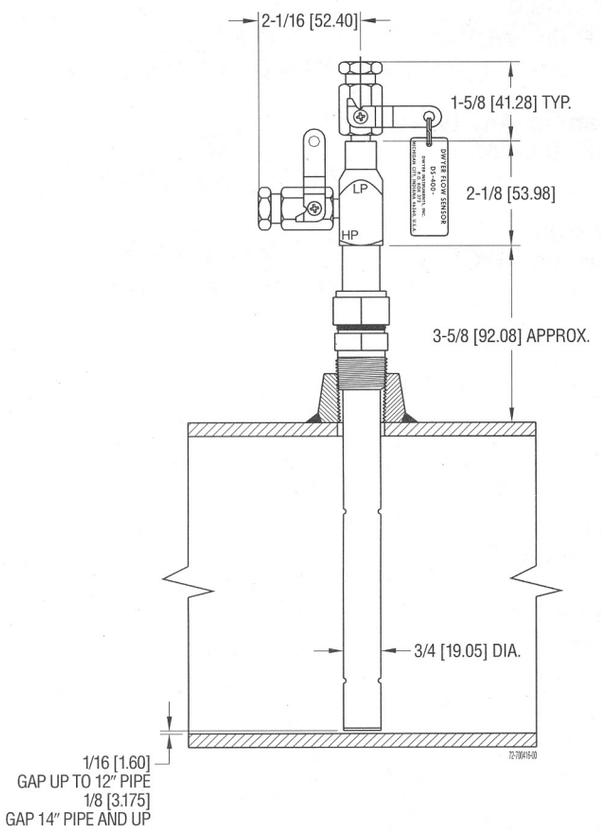

FLOW CALCULATIONS AND CHARTS

The following information contains tables and equations for determining the differential pressure developed by the DS-400 Flow Sensor for various flow rates of water, steam, air or other gases in different pipe sizes.

This information can be used to prepare conversion charts to translate the differential pressure readings being sensed into the equivalent flow rate. Where direct readout of flow is required, use this information to calculate the full flow differential pressure in order to specify the exact range of Dwyer Magnehelic or Capsuhelic gage required. Special ranges and calculations are available for these gages at minimal extra cost. See bulletin A-30 for additional information on Magnehelic and Capsuhelic gages.

For additional useful information on making flow calculations, the following reference is recommended: Crane Valve Co. Technical Paper No. 410 "Flow of Fluids Through Valves, Fittings and Pipe." It is available from Crane Valve Co., 104 N. Chicago St., Joliet, IL 60431. Phone 815/727-2600. Price including shipping is $20.00

Using the appropriate differential pressure equation from page 4, calculate the differential pressure generated by by the sensor under **normal** operating conditions of the system. Check the chart below to determine if this value is within the recommended operating range for the sensor. Note that the data in this chart is limited to standard conditions of air at 60°F (15.6°C) and 14.7 psia static line pressure or water at 70°F (21.1°C). To determine recommended operating ranges for other gases, liquids and/or operating conditions, consult the factory.

Note the column on the right side of the chart which defines velocity ranges to avoid. Continuous operation within these can result in damage to the flow sensor caused by excess vibration.

Pipe Size (Schedule 40 up to 20". Std. wt. for 24")	Flow Coefficient "K"	Operating Ranges Air @ 60°F & 14.7 psia (D/P Inches W.C.)	Operating Ranges Water @ 70°F (D/P Inches W.C.)	Velocity Ranges Not Recommended (Feet per Second)
6	.706	0.70 to 51	2.54 to 187	83 to 124
8	.675	0.64 to 28	2.31 to 102	53 to 79
10	.676	1.12 to 37	4.05 to 136	36 to 54
12	.683	0.19 to 20	0.70 to 72	26 to 40
14	.698	0.17 to 13	0.60 to 46	22 to 33
16	.688	3.78 to 56	13 to 203	17 to 26
18	.689	0.04 to 5.48	0.14 to 19	14 to 21
20	.686	0.39 to 4.93	1.40 to 17	11 to 17
24	.789	0.05 to 11	0.20 to 40	8 to 12

DWYER INSTRUMENTS, INC.
P.O. Box 373, Michigan City, Indiana 46361, U.S.A.
Phone: 219/879-8000 Fax: 219/872-9057

FLOW EQUATIONS

1. Any Liquid

$$Q\ (GPM) = 5.668 \times K \times D^2 \times \sqrt{\triangle P/S_f}$$

2. Steam or Any Gas

$$Q\ (lb/Hr) = 359.1 \times K \times D^2 \times \sqrt{p \times \triangle P}$$

3. Any Gas

$$Q\ (SCFM) = 128.8 \times K \times D^2 \times \sqrt{\frac{P \times \triangle P}{(T+460) \times S_s}}$$

DIFFERENTIAL PRESSURE EQUATIONS

1. Any Liquid

$$\triangle P\ (in.\ WC) = \frac{Q^2 \times S_f}{K^2 \times D^4 \times 32.14}$$

2. Steam or Any Gas

$$\triangle P\ (in.\ WC) = \frac{Q^2}{K^2 \times D^4 \times p \times 128{,}900}$$

3. Any Gas

$$\triangle P\ (in.\ WC) = \frac{Q^2 \times S_s \times (T+460)}{K^2 \times D^4 \times P \times 16{,}590}$$

TECHNICAL NOTATIONS

The following notations apply:

$\triangle P$ = Differential pressure expressed in inches of water column.
Q = Flow expressed in GPM, SCFM or PPH as shown in equation.
K = Flow coefficient — See Values Tabulated on page 3.
D = Inside diameter of line size expressed in inches. For square & rectangular ducts use $D = \sqrt{\frac{4 \times Height \times Width}{\pi}}$

P = Static Line pressure (psia)
T = Temperature in degrees Fahrenheit (plus 460=°Rankin)
p = Density of medium in pounds per cubic foot
S_f = Sp Gr at flowing conditions
S_s = Sp Gr at 60°F

SCFM TO ACFM EQUATION

$$SCFM = ACFM \times \left(\frac{14.7 + PSIG}{14.7}\right)\left(\frac{520^*}{460 + °F}\right)$$

$$ACFM = SCFM \times \left(\frac{14.7}{14.7 + PSIG}\right)\left(\frac{460 + °F}{520}\right)$$

$$\text{POUNDS PER CUBIC FOOT STD.} = \text{POUNDS PER CUBIC FOOT ACT.} \times \left(\frac{14.7}{14.7 + PSIG}\right)\left(\frac{460 + °F}{520}\right)$$

$$\text{POUNDS PER CUBIC FOOT ACT.} = \text{POUNDS PER CUBIC FOOT STD.} \times \left(\frac{14.7 + PSIG}{14.7}\right)\left(\frac{520}{460 + °F}\right)$$

1 CUBIC FOOT OF AIR = 0.076 POUNDS PER CUBIC FOOT AT 60°F AND 14.7 PSIA

*(520 = 460 + 60°) Std. Temp. Rankine

©Copyright 1997 Dwyer Instruments, Inc.

Printed in U.S.A. 1/97

FR 72-440451-02

DWYER INSTRUMENTS, INC.
P.O. Box 373, Michigan City, Indiana 46361, U.S.A.
Phone: 219/879-8000 Fax: 219/872-9057

ISTEC
Flow Measurement & Control

FLOWMETER

ENGINEERING MANUAL
1800 SERIES

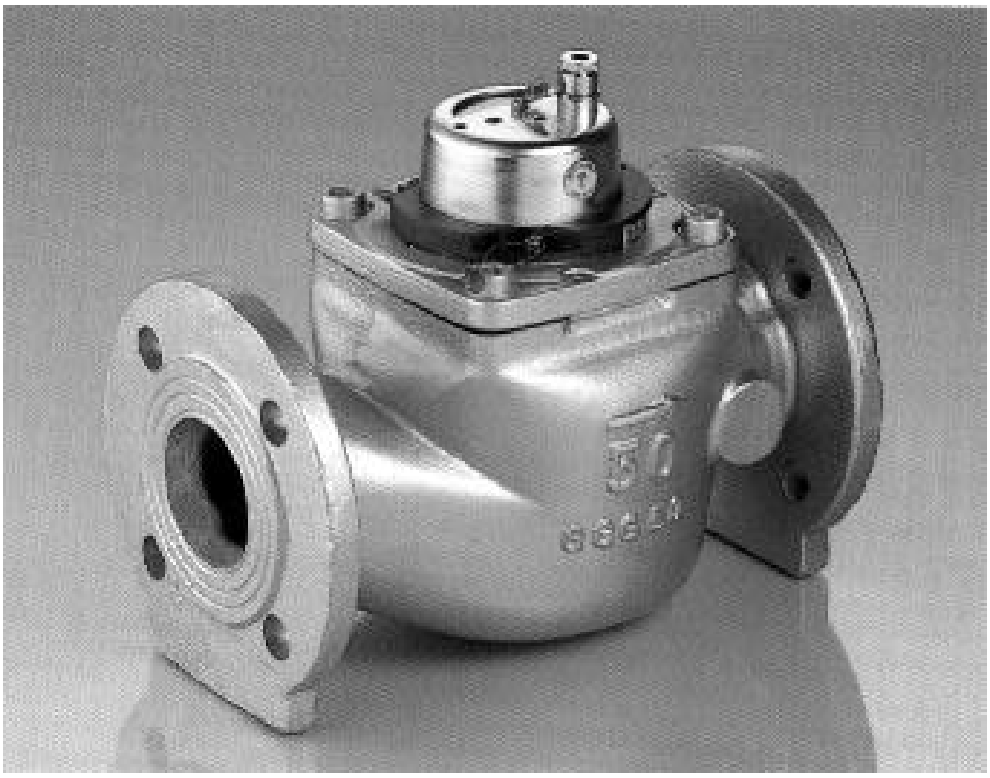

FLOW MEASUREMENT & CONTROL SOLUTIONS

5 Park Lake Road, Sparta, NJ 07871
Phone: (973) 383-9888 Fax: (973) 383-9088 www.istec-corp.com

PRODUCT OVERVIEW

ISTEC's "Super-Jet" 1800 Series are industrial grade water meters available in ½" through 12" sizes. All sizes incorporate a variety of standard features such as U.S. gallon register, hermetically sealed non-resettable counter, trickle flow indicator and pulse output. ISTEC "Super-Jet" design leaves only the turbine immersed, resulting in reliable and long lasting performance.

For easy installation, all ISTEC flow meters up to 1½'' are available with union connections; 2'' and larger sizes are designed with standard flanges. The smooth running turbine, together with a self-aligning suspension bearing system and other innovative features provides superior reliability and accuracy that meets or exceeds AWWA standards.

In addition, a high temperature version (350ºF) of the 2", 3" and 4" meters is available.

COMPONENT DESCRIPTION

BODY

Pipe Size ½" (15mm) To 1½" (40mm)	Brass
Pipes Size 2" (50mm) To 12" (300mm)	Cast Iron

FLOW INSERT

Turbine	Fiberglass
Turbine Axle	Chrome/Nickel/Steel
Bearing Material	Stainless Steel/Sapphire
Magnetic Transfer	Cobalt/Samarium
Gears, Axles, Screws	Stainless Steel

COUNTER

Calibration	U.S. Gallons (Metric Available)
Housing	Plastic, Hermetically Sealed
Gears	Plastic
Axles	Chrome/Nickel/Steel

ENVIRONMENTAL

Maximum Temperature	248ºF (120ºC)
Maximum Pressure	232 PSI (16 BAR)

TECHNICAL SPECIFICATIONS

P/N			**1800**	**1805**	**1810**	**1811/12**	**1815**	**1816**	**1820**
FLOW	RANGE	MIN	0.13 gpm	0.22 gpm	0.4 gpm	0.4 gpm	0.7 gpm	0.7 gpm	0.88 gpm
			30 lph	50 lph	90 lph	90 lph	160 lph	160 lph	200 lph
		CONT	6.6 gpm	11 gpm	26.32 gpm	26.32 gpm	43.86 gpm	43.86 gpm	65.8 gpm
			1.5 m^3ph	2.5 m^3ph	6 m^3ph	6 m^3ph	10 m^3ph	10 m^3ph	15 m^3ph
		MAX	13.2 gpm	22 gpm	52.6 gpm	52.6 gpm	87.22 gpm	87.22 gpm	131.6 gpm
			3 m^3ph	5 m^3ph	12 m^3ph	12 m^3ph	20 m^3ph	20 m^3ph	30 m^3ph
PULSE		gal/pulse	1	1	1	1	1	1	10
		liters/pulse	1	1	1	1	1	1	10
WEIGHT		pounds	2.3	2.5	6.4	6.8	11.3	12.1	27.5
		kilograms	1	1.1	2.9	3.1	5.1	5.5	12.5

P/N			**1825**	**1830**	**1835**	**1840**	**1845**	**1850**	**1855**
FLOW	RANGE	MIN	2.64 gpm	14.09 gpm	5.26 gpm	26.32 gpm	43.86 gpm	53 gpm	66 gpm
			0.6 m3ph	3.2 m3ph	1.2 m3ph	6 m3ph	10 m3ph	12 m3ph	15 m3ph
		CONT	66.04 gpm	140.89 gpm	263.2 gpm	657.9 gpm	1096.5 gpm	1761 gpm	2642 gpm
			15 m^3ph	32 m^3ph	60 m^3ph	150 m^3ph	250 m^3ph	400 m^3ph	600 m^3ph
		MAX	264.2 gpm	396.26 gpm	790 gpm	1535 gpm	2631 gpm	4400 gpm	5284 gpm
			60 m^3ph	90 m^3ph	180 m^3ph	350 m^3ph	600 m^3ph	1000 m^3ph	1200 m^3ph
PULSE		gal/pulse	10	10	10	100	100	100	100
		liters/pulse	10	10	10	100	100	100	100
WEIGHT		pounds	24.4	27.5	43.7	71.6	99.2	260.0	300.0
		kilograms	11.1	12.5	19.8	32.5	45	118	136

TYPICAL FLOWMETER ACCURACY CHART

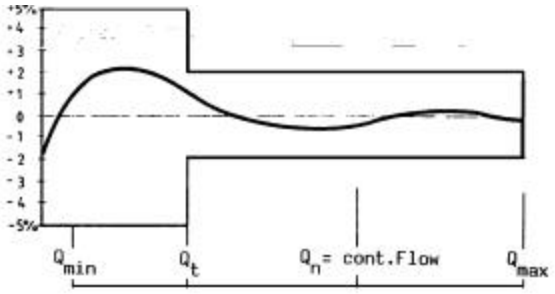

DIMENSIONS

P/N	1800	1805	1810	1811/12	181	1816	1820
Size	½''(H) 15mm	¾" (A) 20mm	1" (H) 25mm	1" (D) 25mm	1½'' (H) 40mm	1½'' (D) 40mm	2"(H) 50mm
h	3/4" 20mm	3/4" 20mm	1-3/4" 45mm	1-1/4" 31mm	2" 50mm	7/8" 21mm	3-1/4" 83mm
H	3-3/4" 95mm	3-3/4" 95mm	5-1/2" 140mm	7-1/2" 191mm	6-1/4" 155mm	8-3/4" 221mm	7-1/8" 180mm
L	4-1/2" 114mm	5" 127mm	10-1/4" 260mm	5-7/8" 150mm	11-7/8" 300mm	7-7/8" 200mm	10-1/2" 270mm
P/N	1825	1830	1835	1840	1845	1850	1855
Size	2"(A) 50mm	3"(A) 80mm	4"(A) 100mm	6"(A) 150mm	8"(A) 200mm	10"(A) 250mm	12"(A) 300mm
h	3" 75mm	3-3/4" 94mm	4-3/8" 110mm	5-3/4" 145mm	6-3/4" 172mm	8" 203mm	9-1/2" 241mm
H	5-1/2" 141mm	5-1/2" 141mm	7-7/8" 200mm	8-1/2" 217mm	8-1/2" 217mm	9-1/4" 240mm	10-1/4" 260mm
L	7-7/8" 200mm	8-7/8" 225mm	9-7/8" 250mm	11-7/8" 300mm	13-3/4" 350mm	17-3/4" 450mm	19-3/4" 502mm

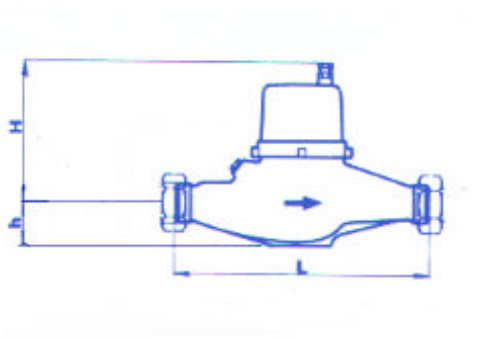

Flowmeter ½" to 1-1/2"

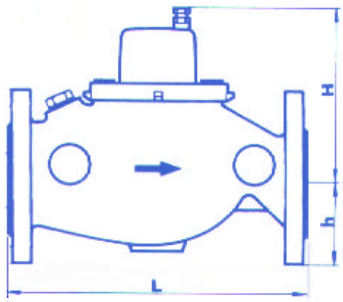

Flowmeter 2" to 12"

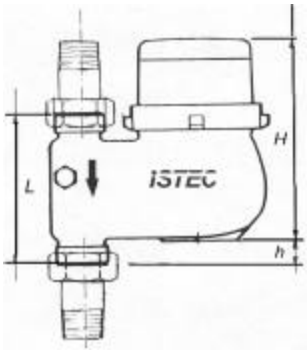

Flowmeter 1" & 1-1/2" Downflow / Upflow

FLOWMETER SPECIFICATION: 1800 SERIES

AS MANUFACTURED BY ISTEC CORPORATION
5 Park Lake Road, Sparta, NJ 07871

The contractor shall furnish and install as shown on the plans a multi-wing turbine type Flowmeter. The Flowmeter shall be factory assembled, calibrated and tested, incorporating the following features:

BODY

The Flowmeter shall have a line size of _____ inch(s)/_____mm(s). The body shall be constructed of brass (from ½" (15mm) to 1-1/2" (40mm) sizes) or cast iron (from 2" (50mm) to 12" (300mm)).

FLOW INSERT

The Flow Insert shall be the "single-jet" type on the ½" (15mm) and ¾" (20mm) sizes. It shall be the "multi-jet" style on the 1" (25mm) through 12" (300mm) sizes. The insert assembly shall be capable of being replaced without removing the meter body.

COUNTER

The unit shall have a hermetically sealed "dry-type" mechanical counter. The counter will read in U.S. gallons (cubic meters available) and shall be non-resettable.

ACCURACY

The Flowmeter shall have an accuracy of ± 1.5%.

FLOW RANGE

The Flowmeter shall have a minimum flow rating of _____ gpm (_____ lph/or m^3ph). It shall have a continuous flow rating of_____ gpm (_____ m^3ph). The peak flow, which the meter can not be subjected to for more than one hour per day, shall be_____ gpm (_____ m^3ph).

PULSER

The Flowmeter shall provide a "pulse" type output of 1 contact closure for every 1/10/100 gallon(s) of flow (metric counters provide 1 pulse for every 1/10/100 liters of flow).

1800 SERIES INSTALLATION INSTRUCTIONS

1. Before beginning the installation, verify that the system temperature, pressure and flow rate **do not** exceed the ratings indicated on the meter.

2. The meter is designed to operate at a sustained flow of ½ the Maximum Flow Rating (indicated as the Continuous Flow Rating). The meter **should not** be operated at the Maximum Flow Rating for more than one hour per day as excessive wear and/or failure will result.

3. Flush the pipeline thoroughly after any plumbing changes to eliminate the possibility of foreign materials reaching the meter.

4. The ½" and ¾" meters may be installed in horizontal or vertical pipelines (either up or down flow). To achieve the rated accuracy, the meter should be the same diameter as the pipe **and** there should be at least five (5) pipe diameters of straight pipe before and after the meter. The 1" through 2" meters have a specific flow orientation and **must** be installed accordingly. There is no straight pipe requirement before or after the 1" through 2" **(1820 only)** meters. The 2" **(1825 only)** and larger meters may be installed horizontally or vertically and require at least five (5) pipe diameters of straight pipe before and after the meter. In horizontal installations, the flow counter should be facing straight upward.

5. Pay careful attention to the flow direction as indicated by the arrow cast into the meter body.

6. It is highly recommended that a strainer be installed upstream of the meter inlet. It is also recommended that a shutoff valve be located before and after the meter to facilitate service.

7. Care should be taken to protect the meter from water hammer as well as freezing temperatures.

8. The counter is calibrated in U.S. gallons and can not be reset. It will roll around to zero after reaching its maximum reading. See page 2 for additional information on the counter.

9. All 1800 Series meters are equipped with a pulse output (magnetically driven "dry contact type" reed switch). Each contact closure is equal to one (1), ten (10) or one hundred (100) gallons of water as indicated on the meter. The electrical rating of the switch is 0.2 amp at 24 volt.

HOW TO READ A 1800 SERIES WATER METER

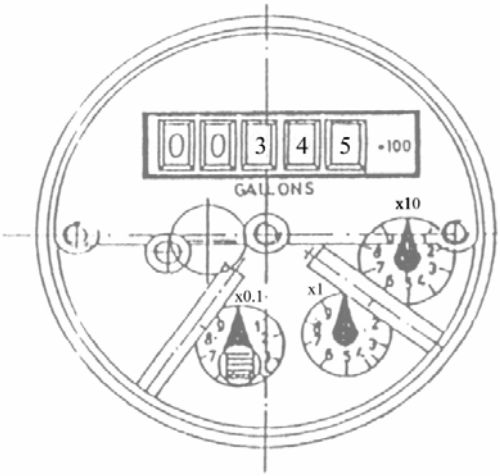

The 1800 Series counter consists of a row of numbers (roller counter) and one or more circular dials with rotating pointers. There is also a star shaped wheel that rotates whenever flow is present (trickle indicator).

The roller counter is calibrated in U.S. gallons and cannot be reset. It indicates the total flow through the meter in gallons, hundreds of gallons, thousands of gallons, etc. The correct multiplier is indicated on the face adjacent to the roller counter. In the example above, the amount indicated is 345 x 100 or 34,500.

The circular dials indicate tenths of gallons, gallons, tens of gallons, etc. The respective multiplier is marked adjacent to the dial. For example, on the dial marked “x10”, each number represents increments of ten gallons (i.e. 3 = 30 gallons, etc.) and one full rotation equals 100 gallons. On the dial marked “x0.1”, each increment is one tenth (1/10) of a gallon (4 = 0.4) and a full rotation of the dial represents a total of 1 gallon. Note that if the pointer is between two numbers, the lower number is read.

The counter will roll around to zero and restart once it reaches its maximum reading.

Delta P (IWC) vs. Flow Rate (SCFM)
DS-400

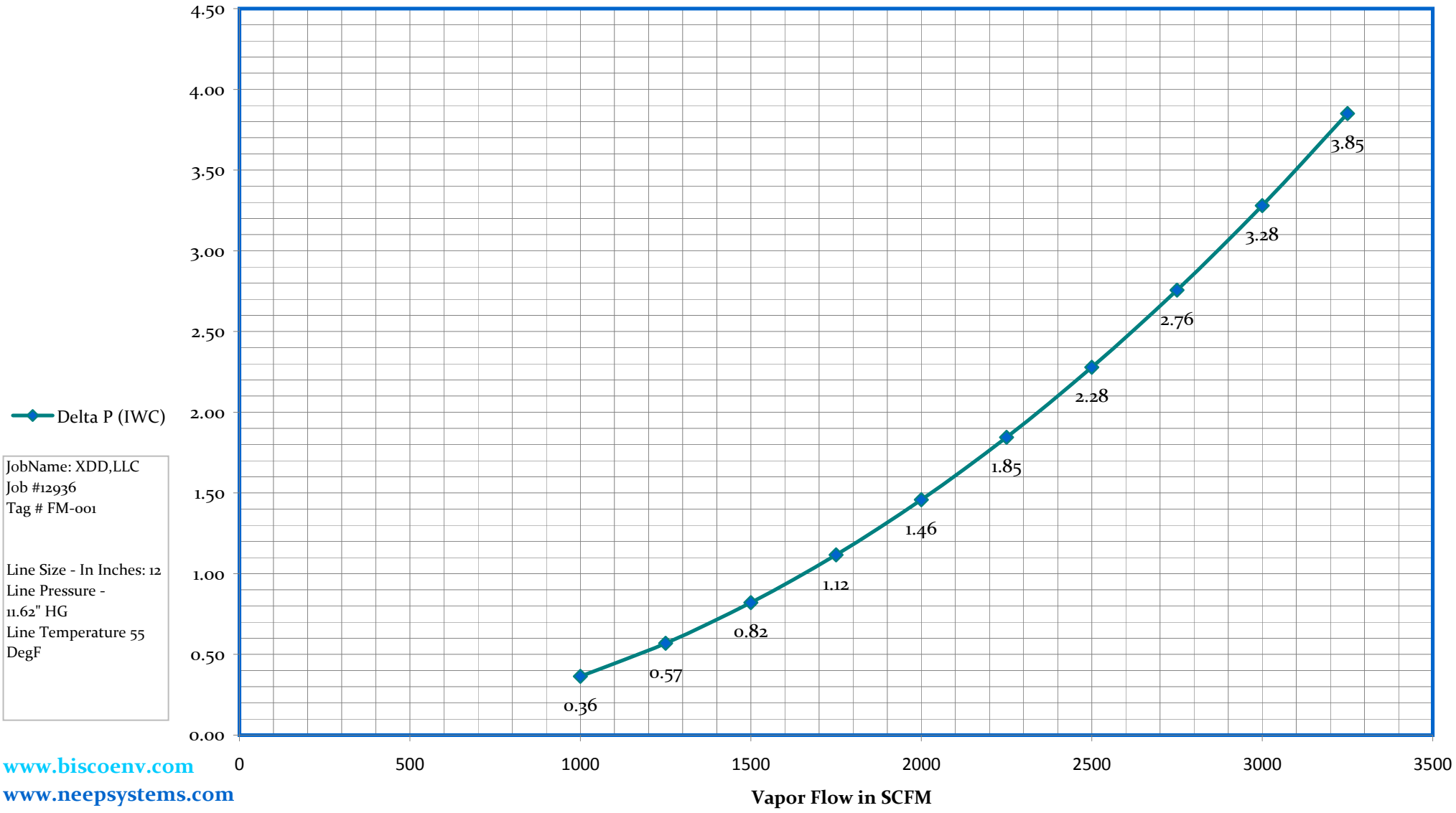

JobName: XDD,LLC
Job #12936
Tag # FM-001

Line Size - In Inches: 12
Line Pressure - 11.62" HG
Line Temperature 55 DegF

www.biscoenv.com
www.neepsystems.com
1-866-50 BISCO

Delta P (IWC) vs. Flow Rate (SCFM)
DS-300

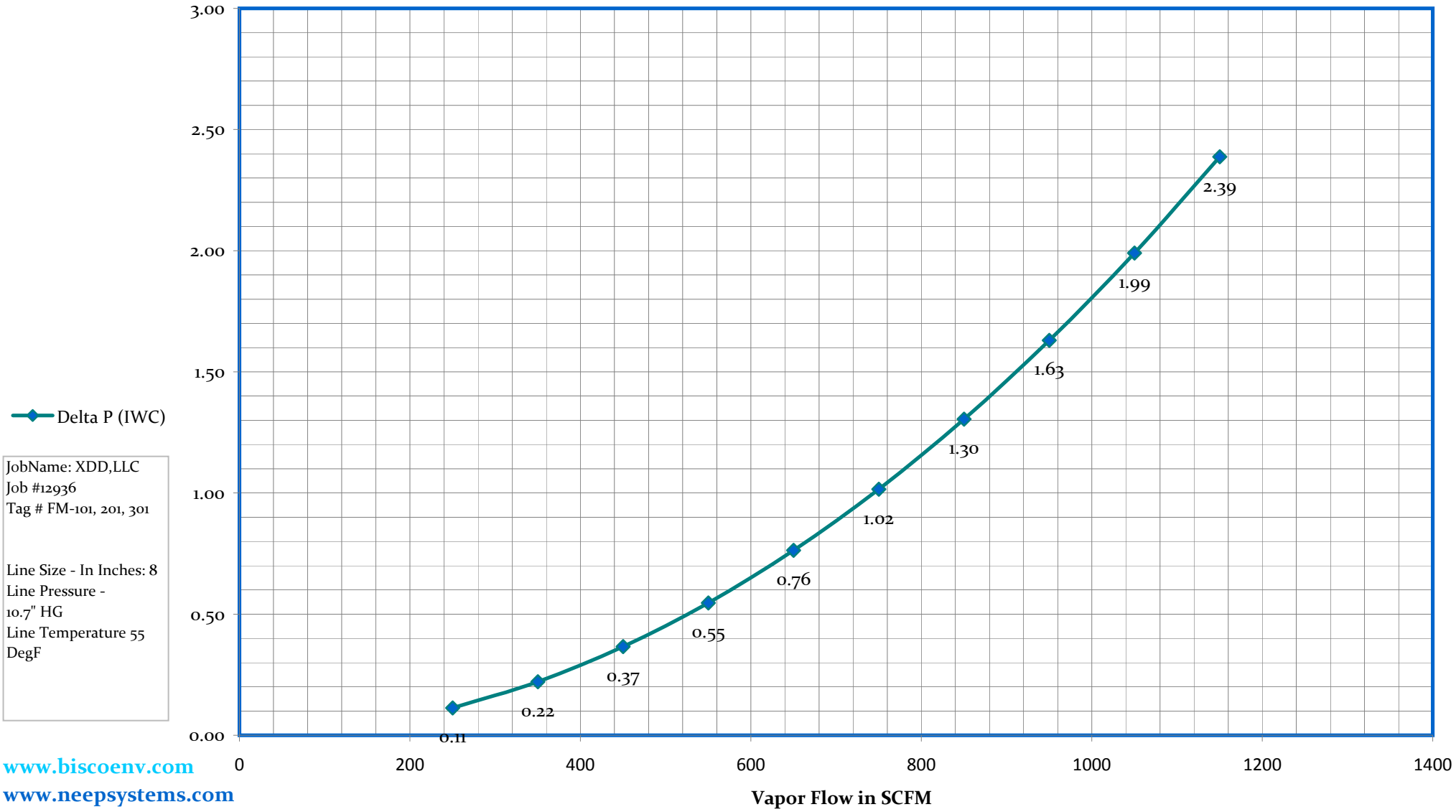

JobName: XDD,LLC
Job #12936
Tag # FM-101, 201, 301

Line Size - In Inches: 8
Line Pressure - 10.7" HG
Line Temperature 55 DegF

www.biscoenv.com
www.neepsystems.com
1-866-50 BISCO

Delta P (IWC) vs. Flow Rate (SCFM)
DS-300

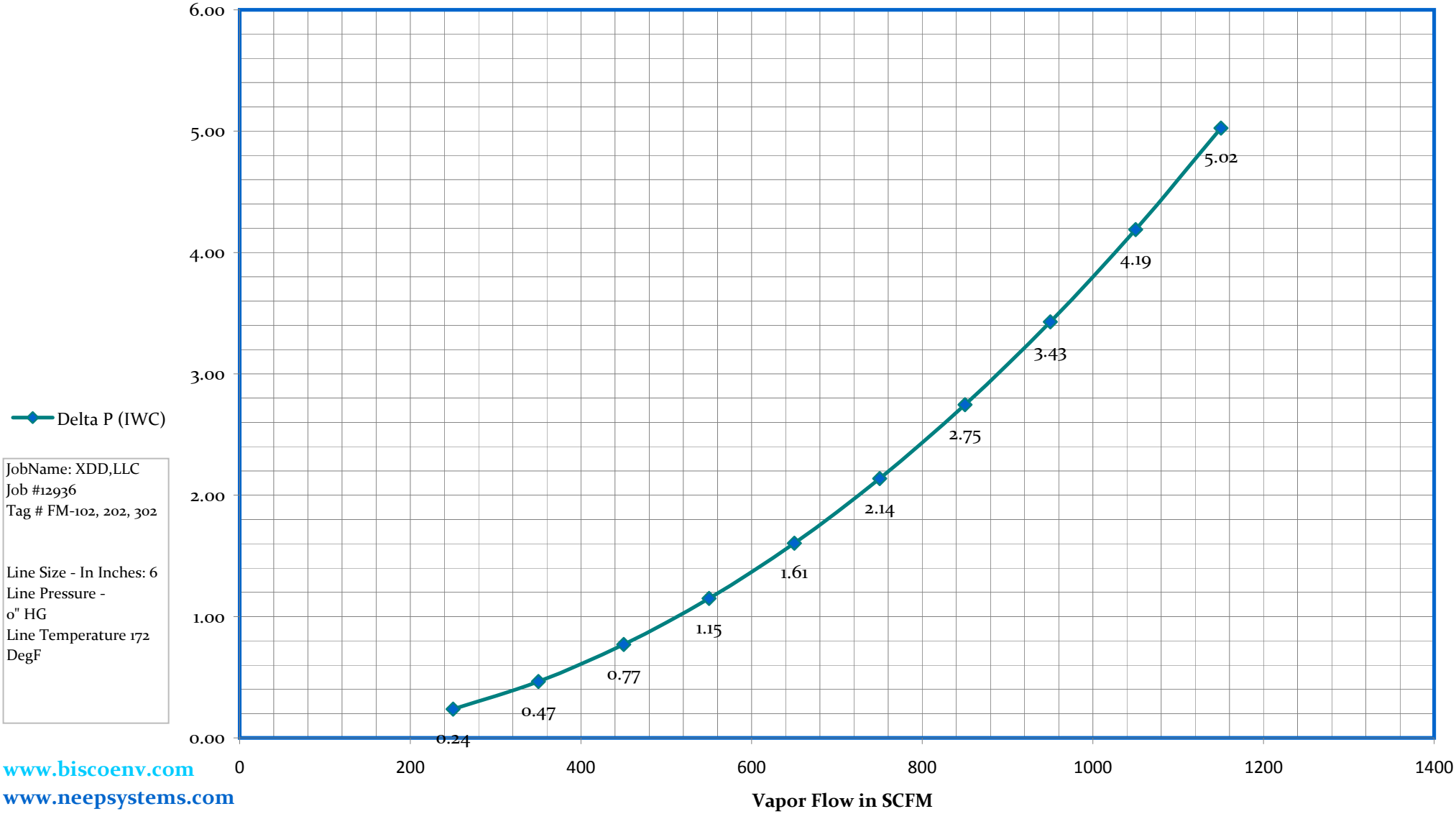

JobName: XDD,LLC
Job #12936
Tag # FM-102, 202, 302

Line Size - In Inches: 6
Line Pressure - 0" HG
Line Temperature 172 DegF

www.biscoenv.com
www.neepsystems.com
1-866-50 BISCO

Delta P (IWC) vs. Flow Rate (SCFM)
DS-300

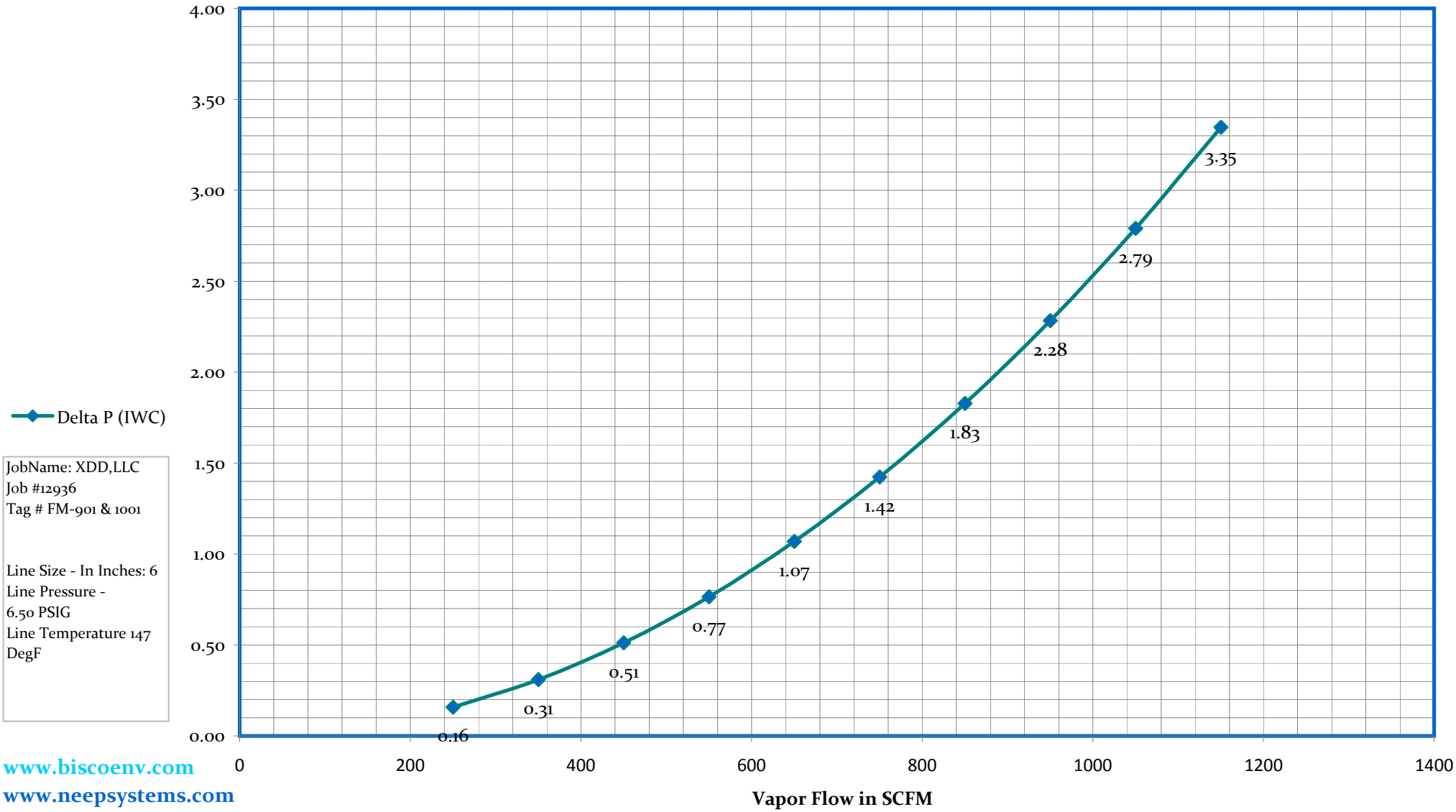

JobName: XDD,LLC
Job #12936
Tag # FM-901 & 1001

Line Size - In Inches: 6
Line Pressure - 6.50 PSIG
Line Temperature 147 DegF

www.biscoenv.com
www.neepsystems.com
1-866-50 BISCO

Delta P (IWC) vs. Flow Rate (SCFM)
DS-300

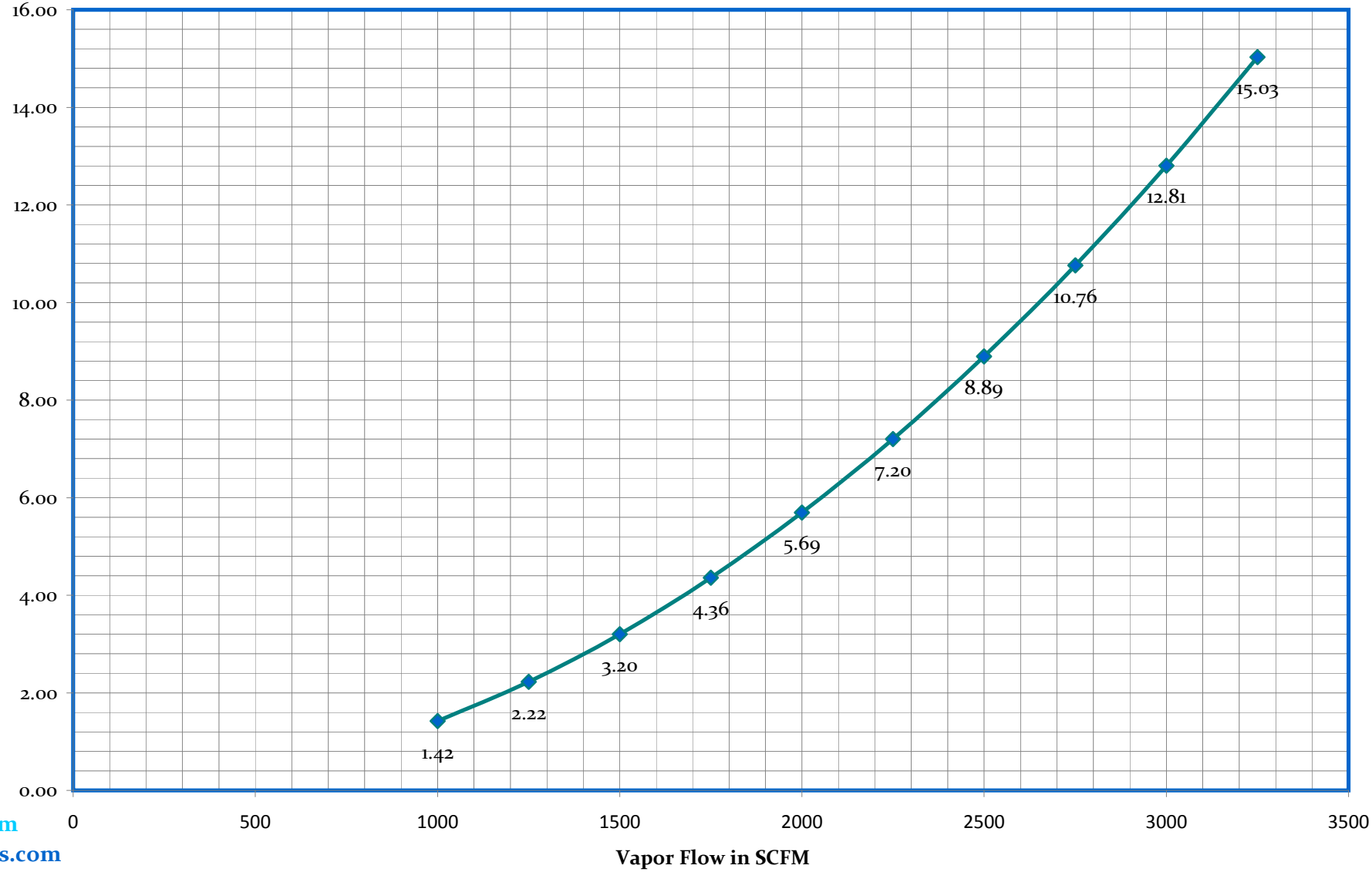

Delta P (IWC)

JobName: XDD,LLC
Job #12936
Tag # FIA-401

Line Size - In Inches: 8
Line Pressure - 0" HG
Line Temperature 172 DegF

www.biscoenv.com
www.neepsystems.com
1-866-50 BISCO

Delta P (IWC) vs. Flow Rate (SCFM)
DS-300

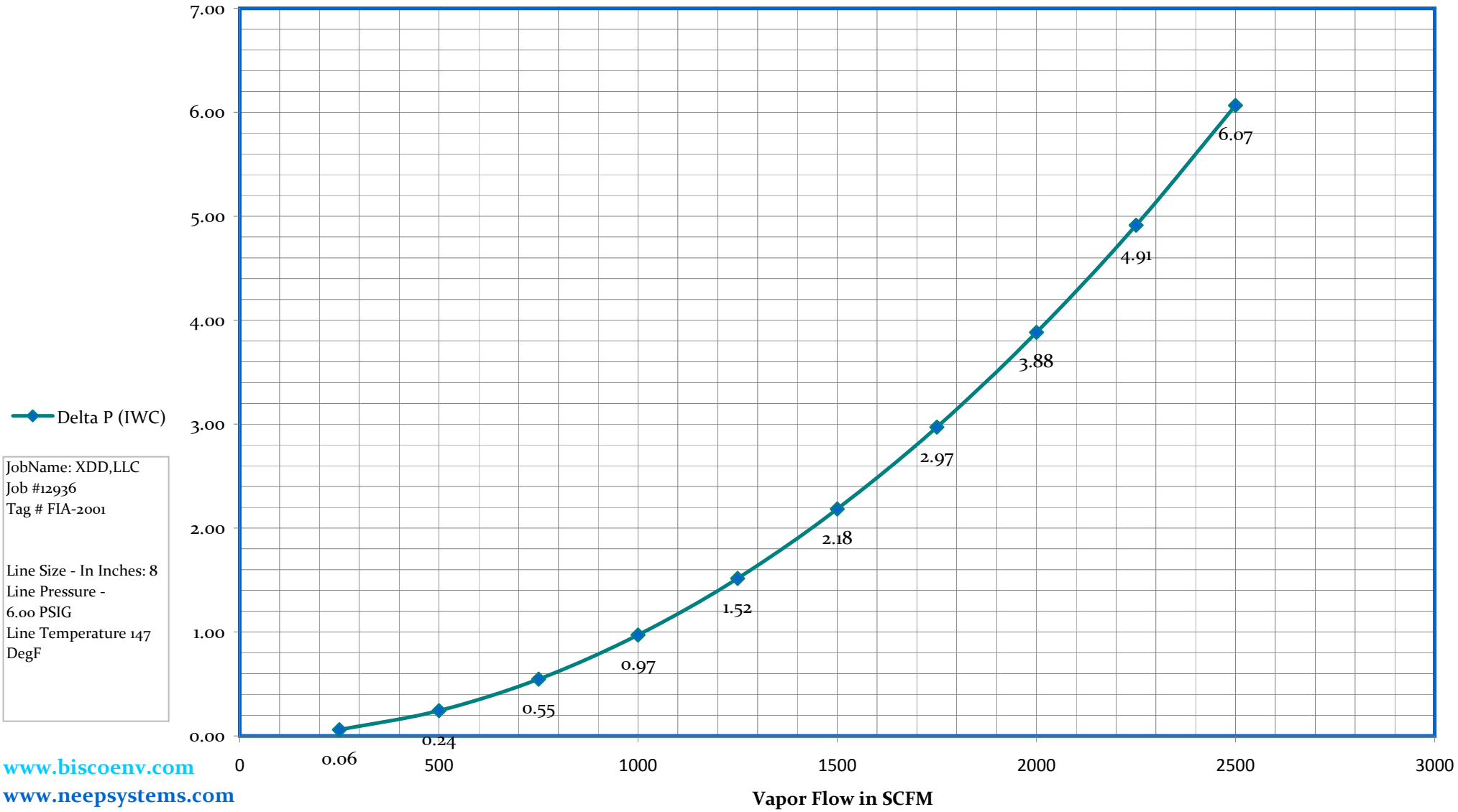

JobName: XDD,LLC
Job #12936
Tag # FIA-2001

Line Size - In Inches: 8
Line Pressure - 6.00 PSIG
Line Temperature 147 DegF

www.biscoenv.com
www.neepsystems.com
1-866-50 BISCO

Sub Section 5D – Level Devices

- Vegaflex Model FX61 Moisture Separator, Oil Water Separator & Product Tank Level Transmitter Product Information
- Vegaflex Model FX61 Level Transmitter Operating Instructions

Level measurement in bulk solids

Guided Microwave

VEGAFLEX 61
VEGAFLEX 62
VEGAFLEX 66

Product Information

VEGA

Content

1 Description of the measuring principle . . . 3

2 Type overview . . . 5

3 Mounting instructions. . . . 8

4 Electrical connection

4.1 General prerequisites. . . . 10
4.2 Voltage supply . . . 10
4.3 Connection cable. . . . 10
4.4 Connection of the cable screen and grounding . . . 10
4.5 Wiring plan . . . 11

5 Operation

5.1 Overview. . . . 12
5.2 Compatibility according to NAMUR NE 53. . . . 12
5.3 Adjustment with the indicating and adjustment module PLICSCOM. . . . 12
5.4 Adjustment with PACTware™. . . . 12

6 Technical data . . . 14

7 Dimensions. . . . 23

8 Product code . . . 26

Take note of safety instructions for Ex applications

Please note the Ex specific safety information which you can find on our homepage www.vega.com\services\downloads and which comes with every instrument. In hazardous areas you should take note of the appropriate regulations, conformity and type approval certificates of the sensors and power supply units. The sensors must only be operated on intrinsically safe circuits. The permissible electrical values are stated in the certificate.

29658-EN-071204

1 Description of the measuring principle

Measuring principle

High frequency microwave impulses are guided along a steel cable or rod. When they reach the product surface, the microwave pulses are reflected back and received by the processing electronics. The running time is processed by the instrument.

A microprocessor identifies these level echoes, which are subsequently measured by the ECHOFOX software, evaluated and converted into level information.

Time-consuming adjustment with medium is not necessary. The instruments are preset to the ordered probe length. The shortenable cable and rod versions can be adapted individually to the local requirements.

Insensitive to dust

Even process conditions such as intense dust generation do not influence the measurement function.

Unaffected by material fluctuations

Density fluctuations or changes of the dielectric constant do not influence the function.

Buildup: no problem

Buildup or condensation on the probe or vessel wall do not influence the measuring result.

Wide application range

With measuring ranges up to 60 m (197 ft), the sensors are well suited for tall vessels. Temperatures up to 150 °C (302 °F) and pressures from vacuum up to 40 bar (580 psig) ensure a wide application range.

VEGAFLEX 66 is particularly suitable for the measurement of solids with high process temperatures. Its mechanical configuration was specially optimised for such applications. With these high temperature versions, process temperatures from -200° to +400° C (-328 … +752 °F) and pressures up to 400 bar (5800 psig) are possible.

Insensitive to noise

VEGAFLEX sensors are insensitive to filling noise.

1.1 Application examples

Foodstuffs and animal feed

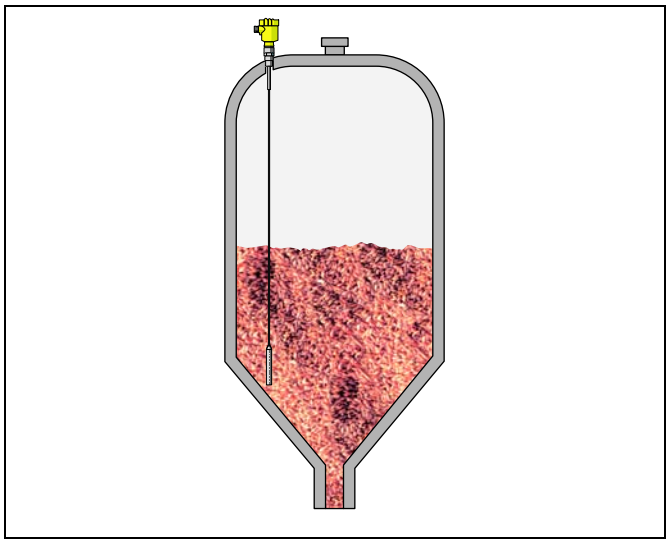

Fig. 1: Level measurement in a grain silo with VEGAFLEX 61

Cereals, sugar, flour, coffee, cornflakes, cacao, instant powder, animal feed - bulk solid levels must be measured everywhere in the food industry.

The guided microwave principle works independent of product characteristics such as moisture, intense dust or noise generation and the shape of the material cone.

Even very tall silos are no problem. Cable probes, also with PA coating, are available for different loads and in lengths up to 60 m (197 ft).

VEGAFLEX meets also the requirements of dust-Ex zone 20 (1/2 D).

29658-EN-071204

Plastics

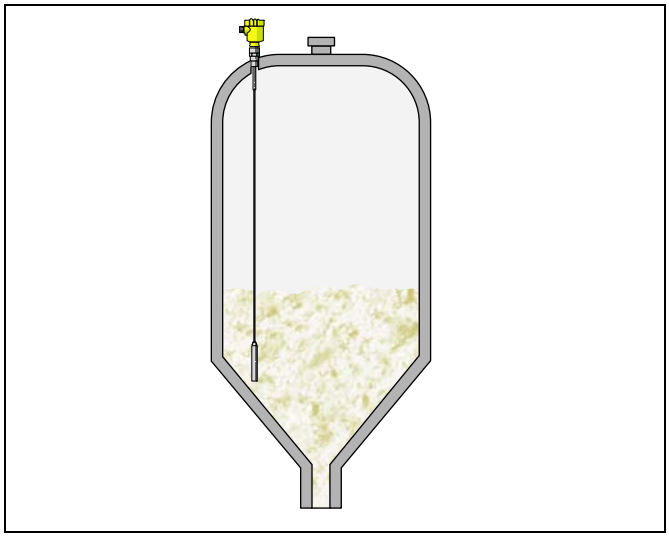

Fig. 2: Level measurement of plastic granules with VEGAFLEX 61

Many finished products in the chemical industry are produced as powder, granules or pellets. The different and sometimes fluctuating product characteristics place heavy demands on the level measurement.

The measuring result is influenced neither by fluctuating product quality nor by dust generation or the shape of the material cone.

Even strong electrostatic discharges cannot harm VEGAFLEX 61.

Unaffected by product properties, the sensor delivers accurate, reproducible level data.

Building materials

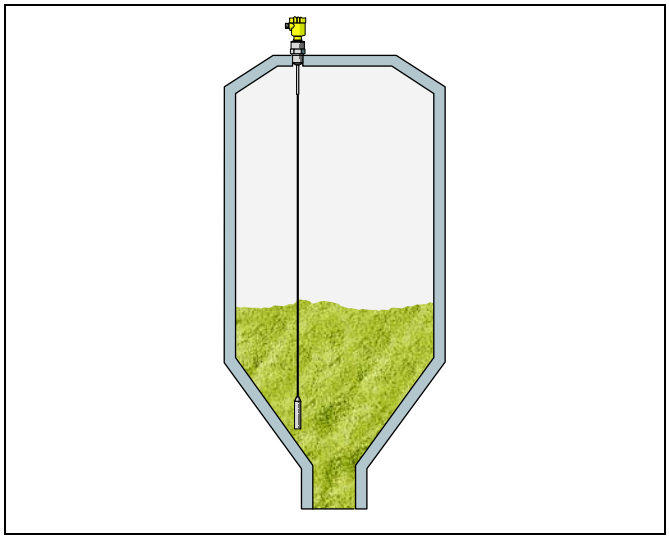

Fig. 3: Level measurement in a storage vessel with VEGAFLEX 62

In the building industry, different additives are stored in single or multiple chamber silos - e.g. cement, sand, filler with varying properties such as moisture content, grain size, material cone shape and flow behavior.

The guided microwave is ideal for level measurement in vessels containing bulk solids. Due to the physical measuring principle, adjustment with medium is no longer necessary. The sensor only has to be electrically connected.

The measuring result is influenced neither by fluctuating product quality nor by dust generation, condensation or the shape of the material cone and therefore has a high reproducibility.

Cable probes are available for different lengths and loads. Tractive forces on the cable up to 3 tons (6000 lbs) are no problem for the stable VEGAFLEX 62.

The measurement is unaffected by product properties such as density, temperature, dielectric value and buildup. Because it is available in a wide range of versions, VEGAFLEX can also measure products such as e.g. light-weight fly ash or hot asphalt.

29658-EN-071204

2 Type overview

	VEGAFLEX 61 with cable measuring probe	VEGAFLEX 61 with rod measuring probe
Application:	Bulk solids	Bulk solids
Measuring range:	0.15 … 32 m (0.492 … 104.99 ft)	0.15 … 4 m (0.492 … 13.12 ft)
Process fitting:	Thread, flange	Thread, flange
Material:	316L and PCTFE, 316	316L and PCTFE, Hastelloy C22 (2.4602)
Process temperature:	-40 … +150 °C (-40 … +302 °F)	-40 … +150 °C (-40 … +302 °F)
Process pressure:	-1 … 40 bar/-100 … 4000 kPa (-14.5 … 580 psig)	-1 … 40 bar/-100 … 4000 kPa (-14.5 … 580 psig)
Signal output:	4 … 20 mA/HART in two-wire, four-wire, Profibus PA, Foundation Fieldbus technology	4 … 20 mA/HART in two-wire, four-wire, Profibus PA, Foundation Fieldbus technology

	VEGAFLEX 62 with cable measuring probe	VEGAFLEX 62 with rod measuring probe
Application:	Bulk solids	Bulk solids
Measuring range:	0.15 … 60 m (0.492 … 196.9 ft)	0.15 … 4 m (0.492 … 13.12 ft)
Process fitting:	Thread, flange	Thread, flange
Material:	316L and PCTFE, 316	316L and PCTFE, Hastelloy C22 (2.4602)
Process temperature:	-40 … +150 °C (-40 … +302 °F)	-40 … +150 °C (-40 … +302 °F)
Process pressure:	-1 … 40 bar/-100 … 4000 kPa (-14.5 … 580 psig)	-1 … 40 bar/-100 … 4000 kPa (-14.5 … 580 psig)
Signal output:	4 … 20 mA/HART in two-wire, four-wire, Profibus PA, Foundation Fieldbus technology	4 … 20 mA/HART in two-wire, four-wire, Profibus PA, Foundation Fieldbus technology

29658-EN-071204

	VEGAFLEX 66 with cable measuring probe	VEGAFLEX 66 with rod measuring probe
Application:	Bulk solids	Bulk solids
Measuring range:	1 … 32 m (3.28 … 104.99 ft)	0.5 … 6 m (1.64 … 19.69 ft)
Process fitting:	Thread, flange	Thread, flange
Material:	316L and Aluminium oxide-ceramic 99.7 % (Al2O3), Hastelloy C22 and Aluminium oxide-ceramic 99.7 % (Al2O3)	316L and Aluminium oxide-ceramic 99.7 % (Al2O3)
Process temperature:	-200 … +400 °C (-328 … +752 °F)	-200 … +400 °C (-328 … +752 °F)
Process pressure:	-1 … 400 bar/-100 … 40000 kPa (-14.5 … 5800 psig)	-1 … 400 bar/-100 … 40000 kPa (-14.5 … 5800 psig)
Signal output:	4 … 20 mA/HART in two-wire, four-wire, Profibus PA, Foundation Fieldbus technology	4 … 20 mA/HART in two-wire, four-wire, Profibus PA, Foundation Fieldbus technology

29658-EN-071204

Indicating and adjustment module	PLICSCOM			
Housing	Plastic	Stainless steel	Aluminium	Aluminium (double chamber)
Electronics	4 … 20 mA/HART two-wire	4 … 20 mA/HART four-wire	Profibus PA	Foundation Field-bus
Process fitting	Thread	Flange		
Sensors	Cable probe	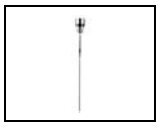 Rod probe		
Approvals	Dust-explosion pro-tection	SIL		

29658-EN-071204

3 Mounting instructions

Measuring range

The reference plane for the measuring range of the sensors is the sealing surface of the thread or flange.

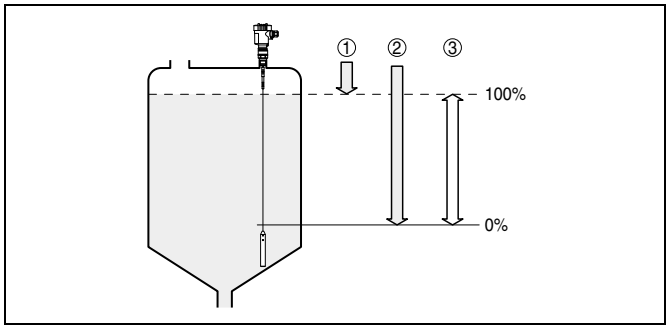

Fig. 4: Measuring range (operating range) and max. measuring distance

1 full
2 empty (max. measuring distance)
3 Measuring range

Keep in mind that a min. distance must be maintained below the reference plane and possibly also at the end of the probe - measurement in these areas is not possible (dead band). Keep in mind that the cable length cannot be used all the way to the end because measurement in the area of the gravity weight is not possible. A possible overfilling however, is also detected reliably within the dead band.

These min. distances (dead zones) are specified in chapter "*Technical data*".

Installation position

Mount VEGAFLEX so that the probe does not touch any installations or the vessel wall during operation. If necessary, fasten the probe end.

When mounting the cable and rod versions of VEGAFLEX keep at least a distance of 300 mm (11.81 in) to vessel installations or the vessel wall.

If possible, mount the sensor flush with the vessel top. If this is not possible, use short sockets with small diameter.

In case of unfavourable mounting conditions such as e.g. very high (h > 200 mm/7.9 in) or very wide (ø > 200 mm/7.9 in) sockets or a too small distance to the vessel wall or vessel installations (< 300 mm/11.81 in), we recommend carrying out a false echo suppression for the area in question. Use the adjustment software PACTware™ with DTM.

Inflowing medium

Make sure that the probe is not subjected to strong lateral forces. Mount VEGAFLEX at a position in the vessel where no mechanical disturbances, e.g. from filling openings, agitators, etc., can occur.

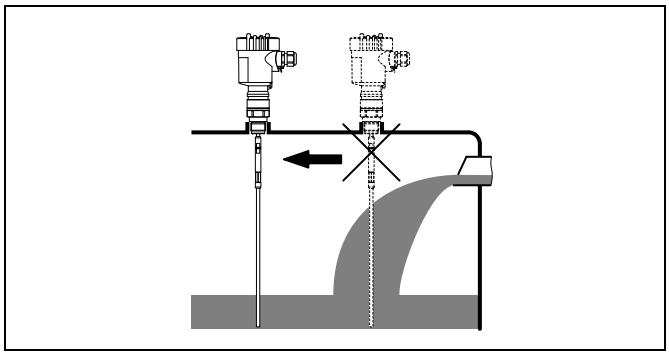

Fig. 5: Lateral load

Type of vessel

Plastic vessel

The guided microwave principle requires a metal surface on the process fitting. Therefore use in plastic vessels etc. an instrument version with flange (from DN 50) or place a metal sheet (ø > 200 mm/8 in) beneath the process fitting when screwing it in.

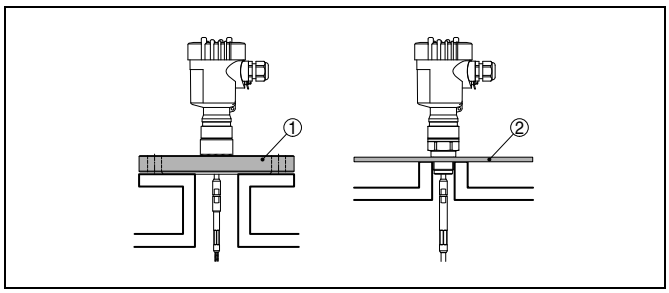

Fig. 6: Installation in plastic silo

1 Flange
2 Metal plate

Concrete vessel

When installed in thick concrete ceilings, VEGAFLEX should be mounted front flush to the lower edge. In concrete silos, the distance to the wall should be at least 500 mm (20 in).

29658-EN-071204

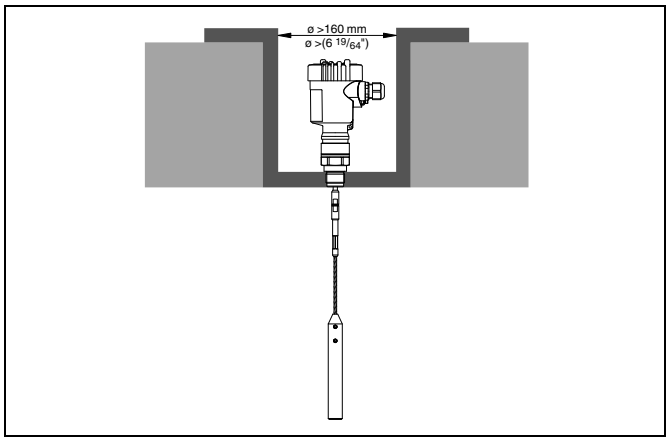

Fig. 7: Installation in concrete silo

Fixing

If there is a danger of the probe touching the vessel wall during operation due to product movements or agitators etc., the measuring probe should be securely fixed.

In the gravity weight there is a thread (M12), e.g. for a ring bolt (article no. 2.27424).

Make sure that the probe cable is not extremely taut. Avoid tensile loads on the cable. Use a slightly pre-stressed tension spring to fasten the cable. Also take note of the max. tensile load. The tensile load is specified in chapter "*Technical data*".

Avoid undefined cable-vessel connections, i.e. the connection must be either grounded reliably or isolated reliably. Any uncontrolled deviation from this requirement can lead to measurement errors.

4 Electrical connection

4.1 General prerequisites

The supply voltage range can differ depending on the instrument version. You can find exact specifications in chapter "*Technical data*".

The national installation standards as well as the valid safety regulations and accident prevention rules must be observed.

In hazardous areas you should take note of the appropriate regulations, conformity and type approval certificates of the sensors and power supply units.

4.2 Voltage supply

4 … 20 mA/HART two-wire
Supply voltage and current signal are carried on the same two-wire cable. The requirements on the power supply are specified in chapter "*Technical data*".

The VEGA power supply units VEGATRENN 149AEx, VEGASTAB 690, VEGADIS 371 as well as the VEGAMET signal conditioning instruments are suitable for power supply. When one of these instruments is used, a reliable separation of the supply circuit from the mains circuits according to DIN VDE 0106 part 101 and protection class II is ensured.

4 … 20 mA/HART four-wire
Power supply and current output are carried on two separate connection cables.

The standard version can be operated with an earth-connected current output, the Exd version must be operated with a floating output.

The instrument is designed in protection class I. To maintain this protection class, it is absolutely necessary that the ground conductor be connected to the internal ground conductor terminal.

Profibus PA
Power is supplied by a Profibus DP/PA segment coupler or a VEGALOG 571 EP input card.

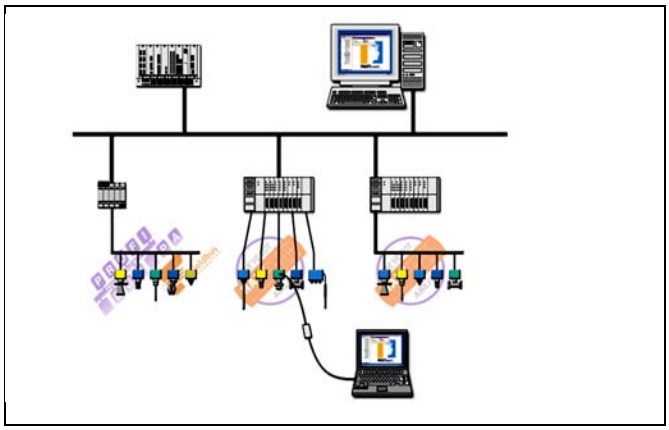

Fig. 8: Integration of instruments in a Profibus PA system via segment coupler DP/PA or data recording systems with Profibus PA input card

Foundation Fieldbus
Power supply via the H1 Fieldbus cable.

4.3 Connection cable

Generally
The sensors are connected with standard cable without screen. An outer cable diameter of 5 … 9 mm ensures the seal effect of the cable entry.

4 … 20 mA/HART two-wire and four-wire
If electromagnetic interference is expected which is above the test values of EN 61326 for industrial areas, screened cable should be used. In HART multidrop mode the use of screened cable is generally recommended.

Profibus PA, Foundation Fieldbus
The installation must be carried out according to the appropriate bus specification. The sensor is connected respectively with screened cable according to the bus specification. Make sure that the bus is terminated via appropriate terminating resistors.

For power supply, an approved installation cable with PE conductor is also required.

In Ex applications, the corresponding installation regulations must be noted for the connection cable.

4.4 Connection of the cable screen and grounding

If screened cable is necessary, the cable screen must be connected on both ends to ground potential. If potential equalisation currents are expected, the connection on the evaluation side must be made via a ceramic capacitor (e.g. 1 nF, 1500 V).

29658-EN-071204

Profibus PA, Foundation Fieldbus
In systems with potential separation, the cable screen is connected directly to ground potential on the power supply unit, in the connection box and directly on the sensor.

In systems without potential equalisation, connect the cable screen directly to ground potential only at the power supply unit and at the sensor - do not connect to ground potential in the connection box or T-distributor.

4.5 Wiring plan

Single chamber housing

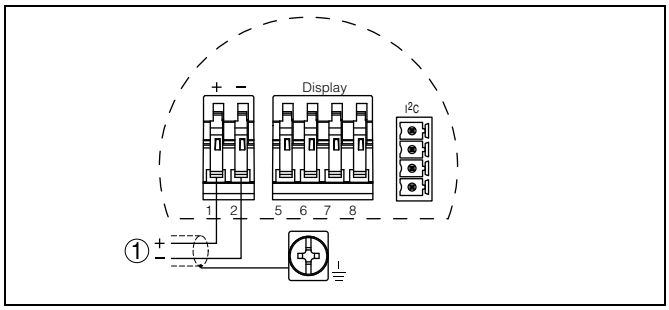

Fig. 9: Connection HART two-wire, Profibus PA, Foundation Fieldbus

1 Voltage supply and signal output

Double chamber housing - two-wire

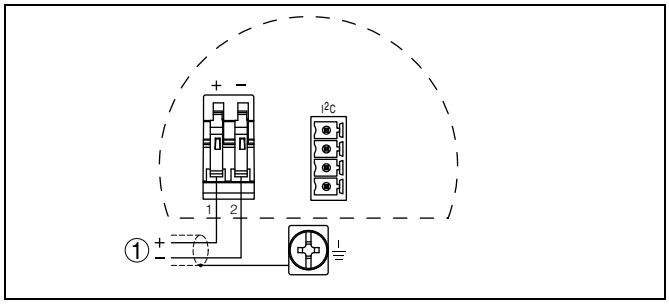

Fig. 10: Connection HART two-wire, Profibus PA, Foundation Fieldbus

1 Voltage supply and signal output

Double chamber housing - 4 … 20 mA/HART four-wire

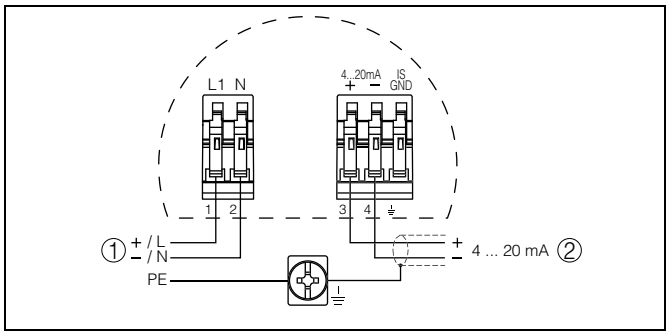

Fig. 11: Connection 4 … 20 mA/HART four-wire

1 Voltage supply
2 Signal output

29658-EN-071204

5 Operation

5.1 Overview

The sensors can be adjusted with the following adjustment media:

- with indicating and adjustment module
- an adjustment software according to FDT/DTM standard, e.g. PACTware™ and PC

and, depending on the signal output, also with:

- a HART handheld (4 … 20 mA/HART)
- The adjustment program AMS (4 … 20 mA/HART and Foundation Fieldbus)
- The adjustment program PDM (Profibus PA)
- a configuration tool (Foundation Fieldbus)

The entered parameters are generally saved in the sensor, optionally also in the indicating and adjustment module or in the adjustment program.

5.2 Compatibility according to NAMUR NE 53

VEGAFLEX meet NAMUR recommendation NE 53. VEGA instruments are generally upward and downward compatible:

- Sensor software to DTM VEGAFLEX HART, PA or FF
- DTM VEGAFLEX for adjustment software PACTware™
- Indicating and adjustment module PLICSCOM for sensor software

The parameter adjustment of the basic sensor functions is independent of the software version. The range of available functions depends on the respective software version of the individual components.

5.3 Adjustment with the indicating and adjustment module PLICSCOM

Setup and indication

PLICSCOM is a pluggable indication and adjustment module for plics® sensors. It can be placed in four different positions on the instrument (each displaced by 90°). Indication and adjustment are carried out via four keys and a clear, graphic-capable dot matrix display. The adjustment menu with language selection is clearly structured and enables easy setup. After setup, PLICSCOM serves as indicating instrument: through the screwed cover with glass insert, measured values can be read directly in the requested unit and presentation style.

The integrated background lighting of the display can be switched on via the adjustment menu.[1)]

PLICSCOM adjustment

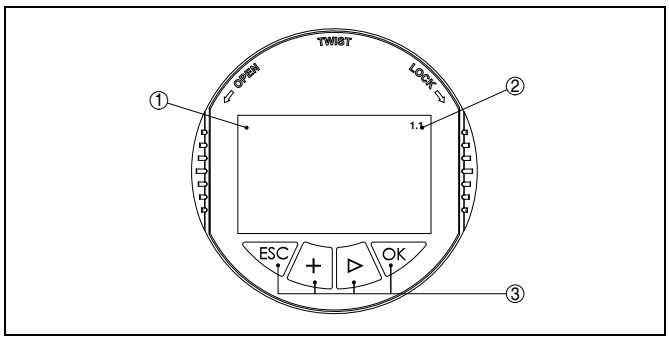

Fig. 12: Indicating and adjustment elements

1 LC display
2 Indication of the menu item number
3 Adjustment keys

Key functions

- ***[OK]*** key:
  - Move to the menu overview
  - Confirm selected menu
  - Edit parameter
  - Save value

- ***[->]*** key to select:
  - menu change
  - list entry
  - Select editing position

- ***[+]*** key:
  - Change value of the parameter

- ***[ESC]*** key:
  - interrupt input
  - jump to the next higher menu

5.4 Adjustment with PACTware™

PACTware™/DTM

Independent of the respective signal output 4 … 20 mA/HART, Profibus PA or Foundation Fieldbus, the sensors can be operated directly on the instrument via PACTware™. The sensors with signal output 4 … 20 mA/HART can be also operated via the HART signal on the signal cable.

An VEGACONNECT interface adapter as well as an instrument driver for the respective sensor is necessary for the adjustment with PACTware™. All currently available VEGA DTMs are included as DTM Collection with the current PACTware™ version on a CD. They are available for a protective fee from our respective VEGA agency. In addition, this DTM Collection incl. the basic

[1)] For instruments with national approvals such as e.g. according to FM or CSA only available at a later date.

version of PACTware™ can be downloaded free-of-charge from the Internet.

To use the entire range of functions of a DTM, incl. project documentation, a DTM licence is required for that particular instrument family. This licence can be bought from the VEGA agency serving you.

Connect the PC via VEGACONNECT 3

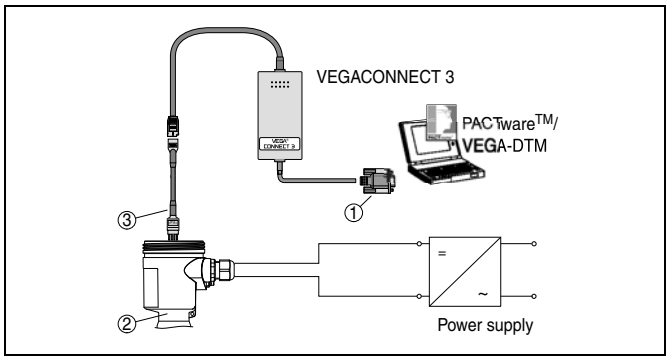

Fig. 13: Connection of the PC directly to the sensor via I²C interface

1 *RS232 connection*
2 *VEGAFLEX*
3 *I²C adapter cable for VEGACONNECT 3*

To adjust with PACTware™, a VEGACONNECT 3 with I²C adapter cable (art. no. 2.27323) as well as a power supply unit is necessary in addition to the PC and the suitable VEGA-DTM.

Connect the PC via VEGACONNECT 4

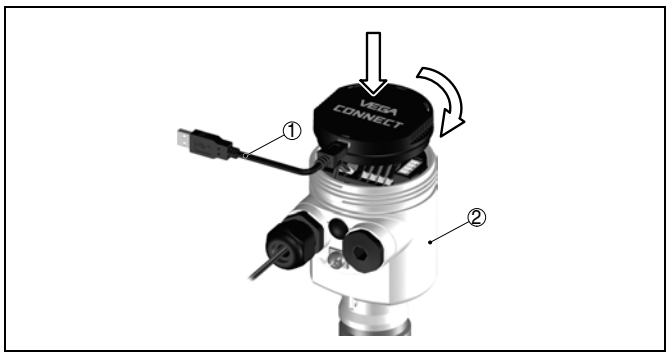

Fig. 14: Internal connection of the PC directly to the sensor via I²C interface

1 *USB cable*
2 *Sensor*

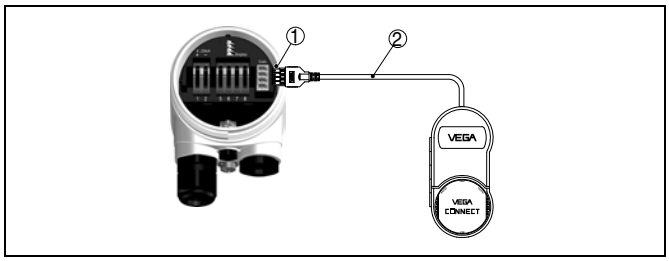

Fig. 15: External connection of the PC directly to the sensor via I²C interface

1 *I²C bus (Com.) interface*
2 *I²C connection cable of VEGACONNECT 4*

6 Technical data

General data

Material 316L corresponds to 1.4404 or 1.4435; 316 corresponds to 1.4401

VEGAFLEX 61

Materials, wetted parts

– Process fitting	316L and PCTFE, Hastelloy C22 (2.4602) and PCTFE
– Process seal on the instrument side (cable/rod leadthrough)	FKM (e.g. Viton), Kalrez 6375, EPDM, FKM (e.g. Viton) FEP-coated
– Process seal	On site (instruments with thread: Klingersil C-4400 is attached)
– inner conductor (up to the separation cable/rod)	1.4462
– Rod: ø 6 mm (0.236 in)	316L/Hastelloy C22 (2.4602)
– Cable: ø 4 mm (0.157 in) with gravity weight (optional)	316

VEGAFLEX 62

Process fitting - cable version	316L and PTFE
Process fitting - rod version	316L and PTFE, Hastelloy C22 (2.4602) and PTFE
Process seal on the instrument side (cable/rod leadthrough)	FKM (e.g. Viton), Kalrez 6375, EPDM, FKM (e.g. Viton) FEP-coated
Process seal	On site (instruments with thread: Klingersil C-4400 is attached)
Cable: ø 6 mm (0.236 in)	316
Rod: ø 16 mm (0.63 in)	316L, Hastelloy C22 (2.4602)

VEGAFLEX 66

Materials, wetted parts - version -200 … +400 °C (-328 … +752 °F)

– Process fitting with rod version	316L, Hastelloy C22 (2.4602) and Aluminium oxide ceramic 99.7 % (Al2O3)
– Process fitting with cable version	316L, Hastelloy C22 (2.4602) and Aluminium oxide ceramic 99.7 % (Al2O3)
– Rod: ø 16 mm (0.63 in)	316L
– Cable: ø 6 mm (0.236 in)	316
– Process seal on the instrument side (cable/rod leadthrough)	graphite
– Process seal	On site (instruments with thread: Klingersil C-4400 is attached)

Materials, non-wetted parts

Materials, non-wetted parts

– Housing	Plastic PBT (polyester), Alu die-casting powder-coated, 316L
– Seal between housing and housing cover	NBR (stainless steel housing), silicone (Alu/plastic housing)
– Inspection window in housing cover for PLICSCOM (optional)	Polycarbonate
– Ground terminal	316L

Weights approx.

Weights

– Depending on process fitting	
– Instrument weight VEGAFLEX 61, 62	approx. 0.8 … 8 kg (0.176 … 17.64 lbs)
– Instrument weight VEGAFLEX 66 (-200 … +400 °C/-328 … +752 °F)	approx. 6 … 12 kg (13.23 … 26.46 lbs)
– Cable: ø 4 mm (0.157 in)	80 g/m (0.86 oz/ft)
– Cable: ø 6 mm (0.236 in)	170 g/m (1.8 oz/ft)
– Rod: ø 6 mm (0.236 in)	220 g/m (2.365 oz/ft)
– Rod: ø 16 mm (0.63 in)	1600 g/m (17.2 oz/ft)
– Gravity weight (optional: ø 4 mm (0.157 in)	325 g (11.5 oz)
– Gravity weight (optional: ø 6 mm (0.236 in)	730 g (25.8 oz)

Lengths

Lengths (L)

– Cable: ø 4 mm (0.157 in)	1 … 32 m (3.28 … 104.99 ft)
– Cable: ø 6 mm (0.236 in)	1 … 60 m (3.28 … 196.9 ft)
– Trimming accuracy - cable	±0.05 %
– Rod: ø 6 mm (0.236 in)	0.3 … 4 m (0.984 … 13.12 ft)
– Rod: ø 16 mm (0.63 in)	0.3 … 4 m (0.984 … 13.12 ft)
– Trimming accuracy - rod	< 1 mm (0.039 in)

29658-EN-071204

Lateral load

Lateral load

– Rod: ø 6 mm (0.236 in)	4 Nm (3 lbf ft)
– Rod: ø 16 mm (0.63 in)	30 Nm (22 lbf ft)

Max. tensile load

Max. tensile load

– VEGAFLEX 61 - cable: ø 4 mm (0.157 in)	5 KN (1124 lbf)
– VEGAFLEX 62 - cable: ø 6 mm (0.236 in)	30 KN (6745 lbf)
– VEGAFLEX 66 - cable: ø 4 mm (0.157 in)	2.5 KN (562 lbf)

The tensile force of solids are subject of a normal fluctuation range. For this reason, the determined diagram value of the following diagrams must be multiplied with safety factor 2.

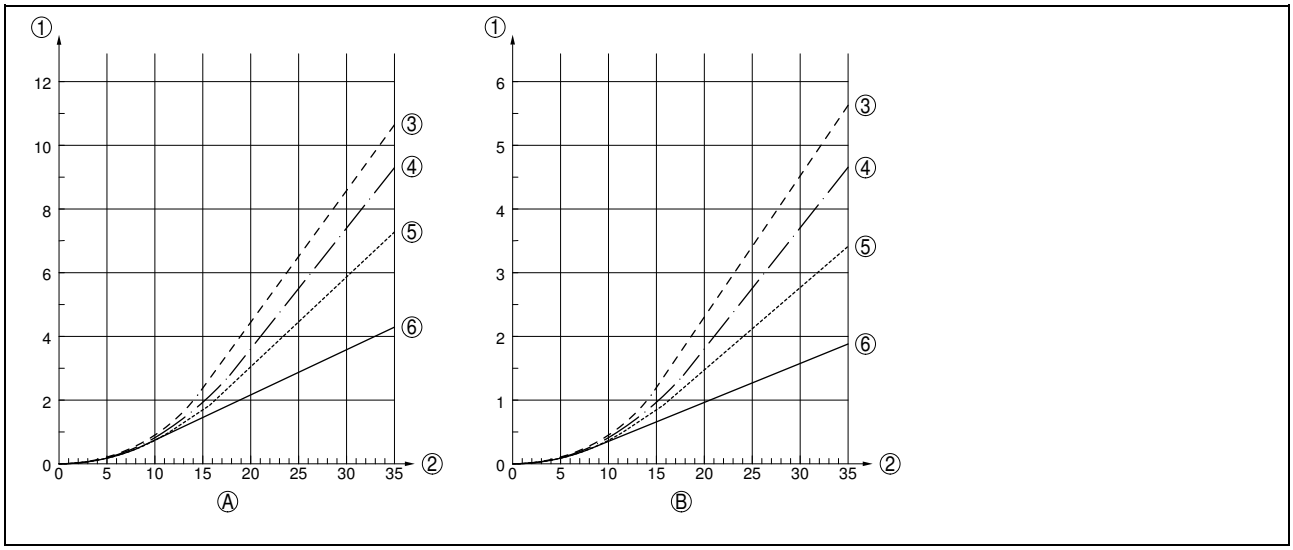

Fig. 16: Max. tensile load for VEGAFLEX 61 with cable: ø 4 mm (0.157 in)

A Cereals
B Plastic granules
1 Tensile force in kN (the determined value must be multiplied with safety factor 2)
2 Cable length in m
3 Vessel diameter 12 m (39.37 ft)
4 Vessel diameter 9 m (29.53 ft)
5 Vessel diameter 6 m (19.69 ft)
6 Vessel diameter 3 m (9.843 ft)

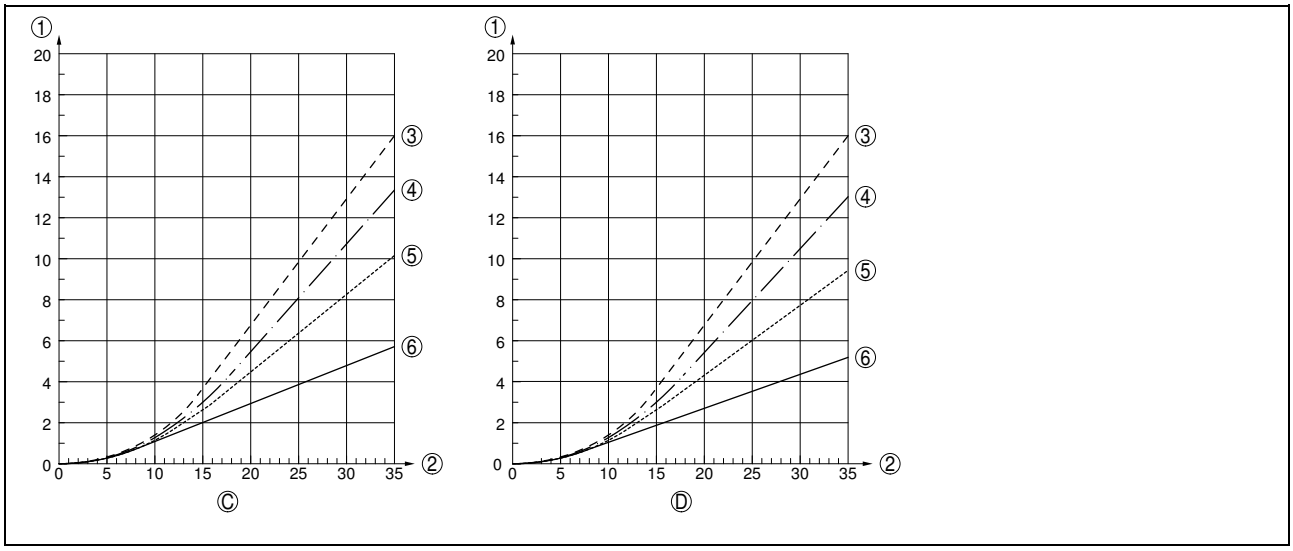

Fig. 17: Max. tensile load for VEGAFLEX 61 with cable: ø 4 mm (0.157 in)

C Sand
D Cement
1 Tensile force in kN (the determined value must be multiplied with safety factor 2)
2 Cable length in m
3 Vessel diameter 12 m (39.37 ft)
4 Vessel diameter 9 m (29.53 ft)
5 Vessel diameter 6 m (19.69 ft)
6 Vessel diameter 3 m (9.843 ft)

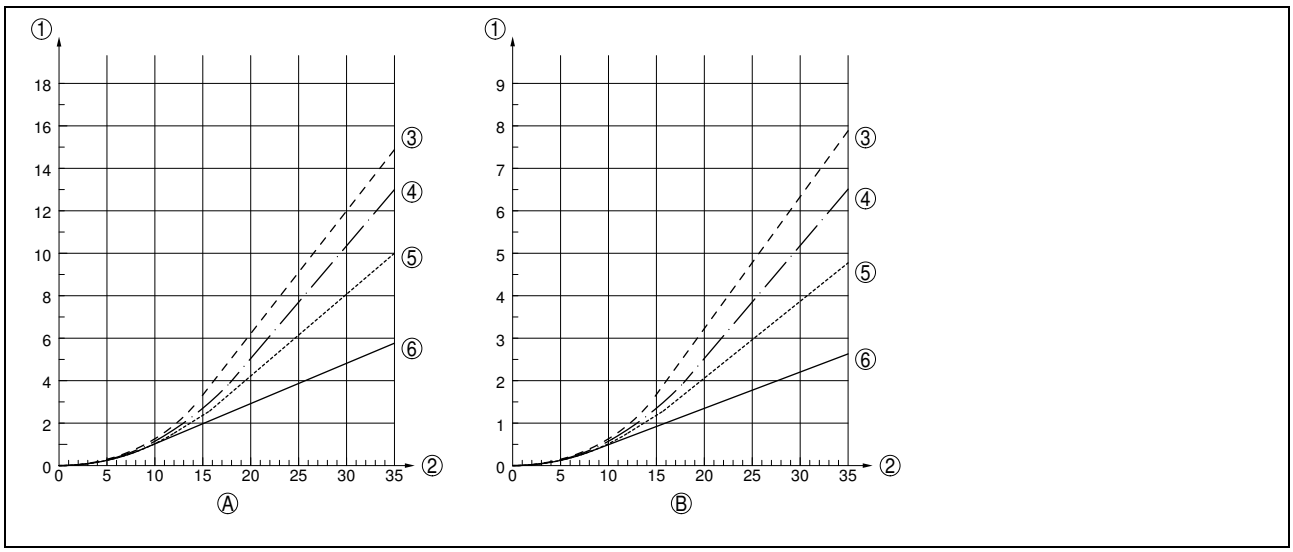

Fig. 18: Max. tensile load for VEGAFLEX 62 with cable: ø 6 mm (0.236 in)

A Cereals
B Plastic granules
1 Tensile force in kN (the determined value must be multiplied with safety factor 2)
2 Cable length in m
3 Vessel diameter 12 m (39.37 ft)
4 Vessel diameter 9 m (29.53 ft)
5 Vessel diameter 6 m (19.69 ft)
6 Vessel diameter 3 m (9.843 ft)

29658-EN-071204

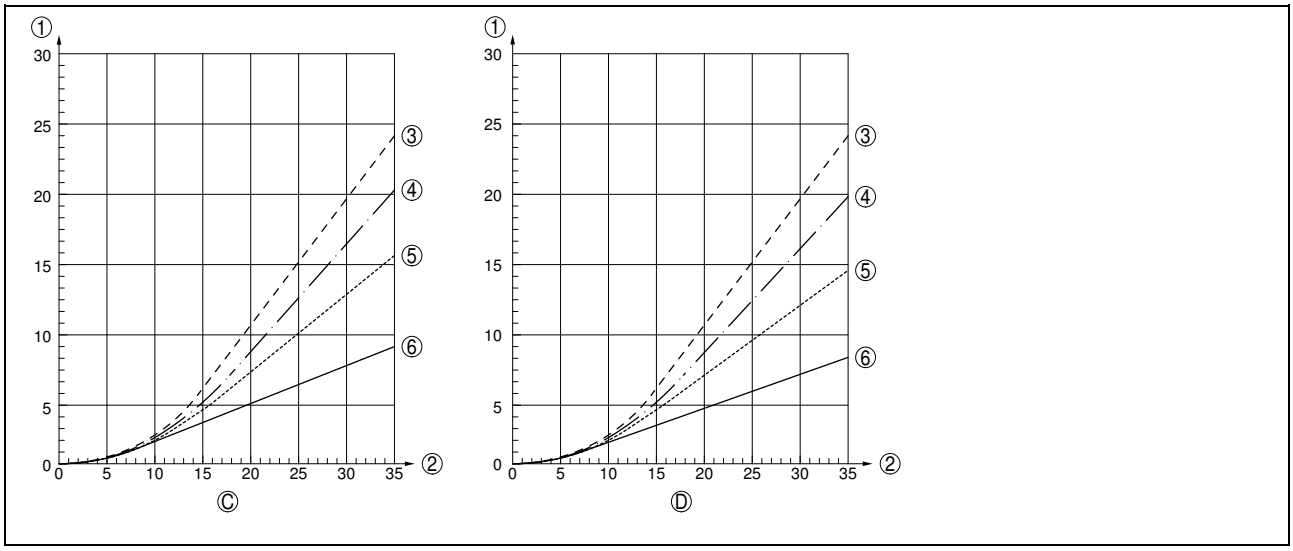

Fig. 19: Max. tensile load for VEGAFLEX 62 with cable: ø 6 mm (0.236 in)

C Sand
D Cement
1 Tensile force in kN (the determined value must be multiplied with safety factor 2)
2 Cable length in m
3 Vessel diameter 12 m (39.37 ft)
4 Vessel diameter 9 m (29.53 ft)
5 Vessel diameter 6 m (19.69 ft)
6 Vessel diameter 3 m (9.843 ft)

Output variable

4 … 20 mA/HART

Output signal	4 … 20 mA/HART
Signal resolution	1.6 µA
Fault message	Current output unchanged 20.5 mA, 22 mA, < 3.6 mA (adjustable)
Max. output current	22 mA
Load	
– 4 … 20 mA/HART two-wire instrument	see load diagram under Power supply
– 4 … 20 mA/HART four-wire instrument	max. 500 Ohm[2)]
Damping (63 % of the input variable)	0 … 999 s, adjustable
Fulfilled NAMUR recommendations	NE 43

Profibus PA

Output signal	digital output signal, format according to IEEE-754
Sensor address	126 (default setting)
Current value	10 mA, ±0.5 mA
Integration time (63 % of the input variable)	0 … 999 s, adjustable

Foundation Fieldbus

Output	
– Signal	digital output signal, Foundation Fieldbus protocol
– Physical layer	according to IEC 61158-2
Channel Numbers	
– Channel 1	Primary Value
– Channel 2	Secondary Value 1
– Channel 3	Secondary Value 2
Transmission rate	31.25 Kbit/s
Current value	10 mA, ±0.5 mA
Integration time (63 % of the input variable)	0 … 999 s, adjustable

[2)] With inductive load ohmic share min. 25 Ω/mH.

Input variable

Parameter	Level of solids
Cable and rod version	
Min. dielectric value with rod, cable version	εr > 1.6
Dead zone with rod version (ø 6 mm/0.236 in, ø 16 mm/0.63 in)	
– top	80 mm (3.15 in)
– bottom	-
Dead band with cable version (ø 4 mm/0.157 in, ø 6 mm/0.236 in)	
– top	150 mm (5.91 in)
– bottom	250 mm (9.843 in), gravity weight + 100 mm (3.937 in)

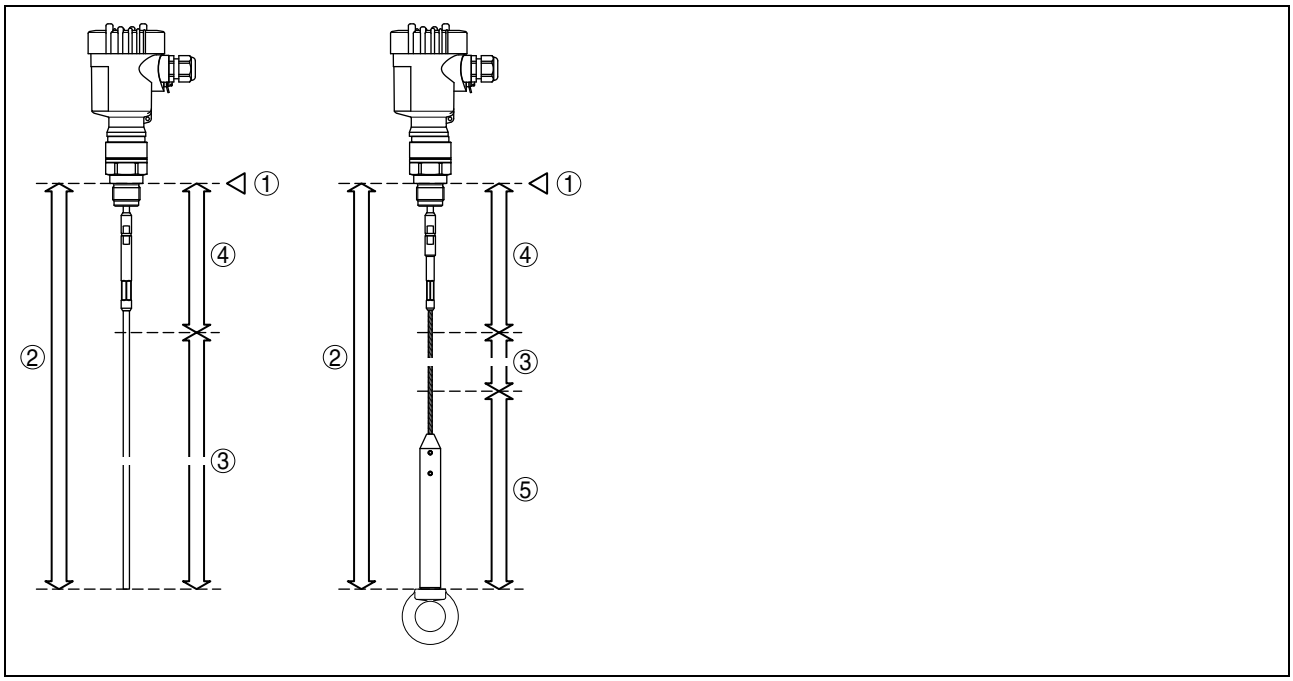

Fig. 20: Measuring ranges of VEGAFLEX with cable and rod version e.g. VEGAFLEX 61

1 *Reference plane*
2 *Probe length*
3 *Measuring range*
4 *Upper dead band*
5 *Lower dead band (only with cable version)*

Accuracy (similar to DIN EN 60770-1)

Reference conditions according to DIN EN 61298-1	
– Temperature	+18 … +30 °C (+64 … +86 °F)
– Relative humidity	45 … 75 %
– Air pressure	860 … 1060 mbar/86 … 106 kPa (12.5 … 15.4 psig)

Deviation in characteristics and characteristics

Reference installation conditions	
– Flange	DN 100
– min. distance to installations	1 m (3.28 ft)
– Min. distance to metal vessel bottom	20 mm (0.787 in)
Reference reflector	Metal plate: ø 500 mm (19.69 in)
Temperature drift (current output)	0.06 %/10 K relating to the max. measuring range
Accuracy	
– Cable version	±3 mm (0.118 in)
– Rod version	±3 mm (0.118 in)

29658-EN-071204

Ambient conditions

Ambient, storage and transport temperature	-40 … +80 °C (-40 … +176 °F)

Process conditions

Process pressure

– Standard version	-1 … 40 bar/-100 … 4000 kPa (-14.5 … 580 psig), depending on the process fitting
– High temperature version	-1 … 400 bar/-100 … 40000 kPa (-14.5 … 5800 psig), depending on the process fitting

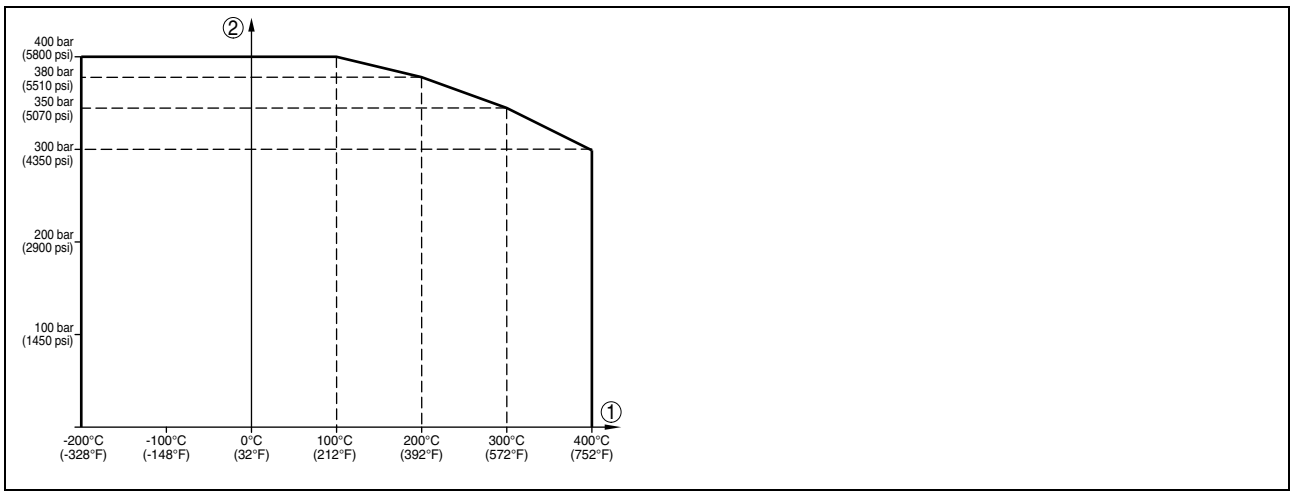

Fig. 21: Version -200 … +400 °C (-328 … +752 °F): dependency process pressure to product temperature

1 Product temperature
2 Process pressure

Process temperature (thread or flange temperature) - dependency from seal material

– FKM (e.g. Viton)	-40 … +150 °C (-40 … +302 °F)
– FKM (e.g. Viton), FEP-coated	-40 … +150 °C (-40 … +302 °F)
– EPDM	-40 … +150 °C (-40 … +302 °F)
– Kalrez 6375	-20 … +150 °C (-4 … +302 °F)
– High temperature version (seal graphite)	-200 … +400 °C (-328 … +752 °F)

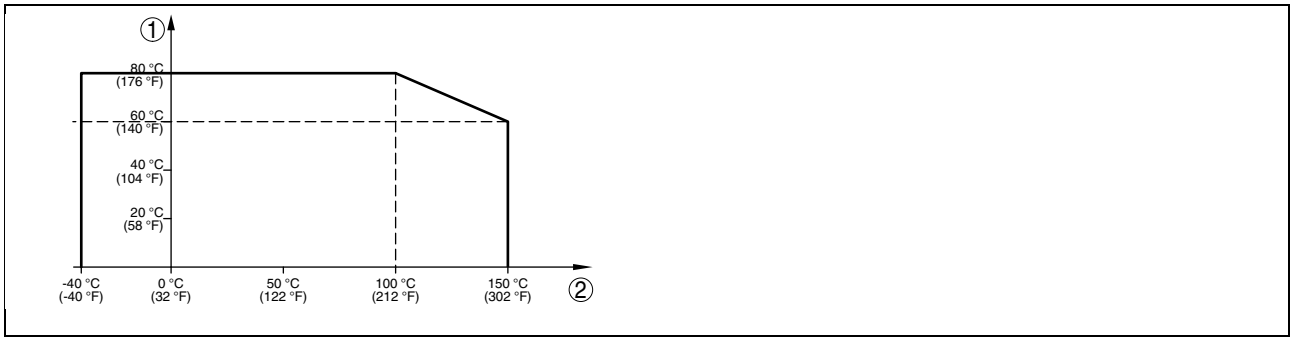

Fig. 22: Dependendency ambient temperature to product temperature

1 Ambient temperature
2 Product temperature (depending on the seal material)

29658-EN-071204

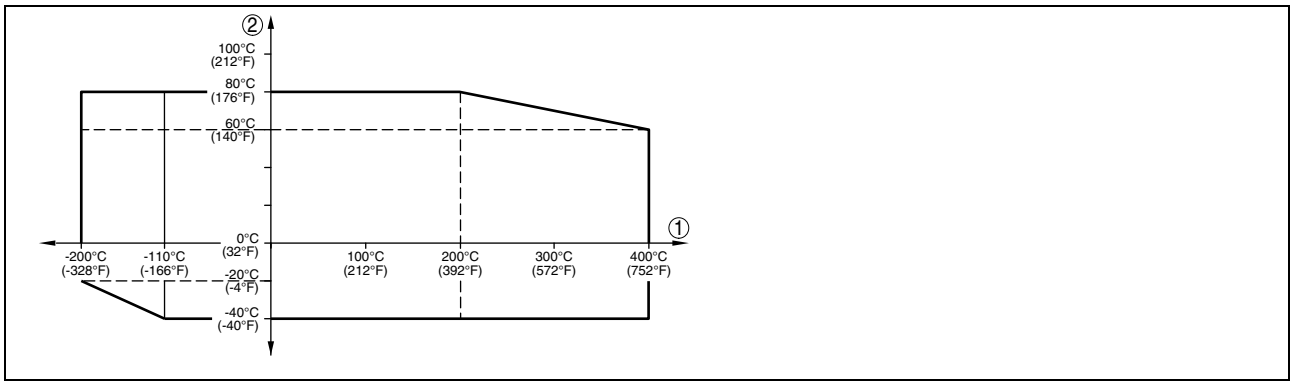

Fig. 23: Version -200 … +400 °C (-328 … +752 °F): in dependence on ambient temperature to product temperature

1 Ambient temperature
2 Product temperature (depending on the seal material)

Electromechanical data - version IP 66/IP 67 and IP 66/IP 68; 0.2 bar

Cable entry/plug[3]	
– Single chamber housing	• 1 x cable entry M20 x 1.5 (cable: ø 5 … 9 mm), 1 x blind stopper M20 x 1.5 or: • 1 x closing cap M20 x 1.5; 1 x blind stopper M20 x 1.5 or: • 1 x closing cap ½ NPT, 1 x blind plug ½ NPT or: • 1 x plug (depending on the version), 1 x blind stopper M20 x 1.5
– Double chamber housing	• 1 x cable entry M20 x 1.5 (cable: ø 5 … 9 mm), 1 x blind stopper M20 x 1.5; 1 x blind stopper M16 x 1.5 or optionally available with 1 x plug M12 x 1 for VEGADIS 61 or: • 1 x closing cap ½ NPT, 1 x blind stopper ½ NPT, 1 x blind stopper M16 x 1.5 or optionally available with 1 x plug M12 x 1 for VEGADIS 61 or: • 1 x plug (depending on the version), 1 x blind stopper M20 x 1.5; 1 x blind stopper M16 x 1.5 or optionally available with 1 x plug M12 x 1 for VEGADIS 61
Connection terminals	Spring-loaded terminals for wire cross-section up to 2.5 mm^2 (AWG 14)

Indicating and adjustment module

Power supply and data transmission	through the sensor
Indication	LC display in Dot matrix
Adjustment elements	4 keys
Protection	
– unassembled	IP 20
– mounted into the sensor without cover	IP 40
Materials	
– Housing	ABS
– Inspection window	Polyester foil

[3] Depending on the version M12x1, according to DIN 43650, Harting, Amphenol-Tuchel, 7/8" FF.

29658-EN-071204

Power supply VEGAFLEX - two-wire instrument

4 … 20 mA/HART

Supply voltage	
– Non-Ex instrument	14 … 36 V DC
– EEx-ia instrument	14 … 30 V DC
– EEx-d-ia instrument	20 … 36 V DC
Permissible residual ripple	
– < 100 Hz	U_{ss} < 1 V
– 100 Hz … 10 kHz	U_{ss} < 10 mV
Load	see diagram

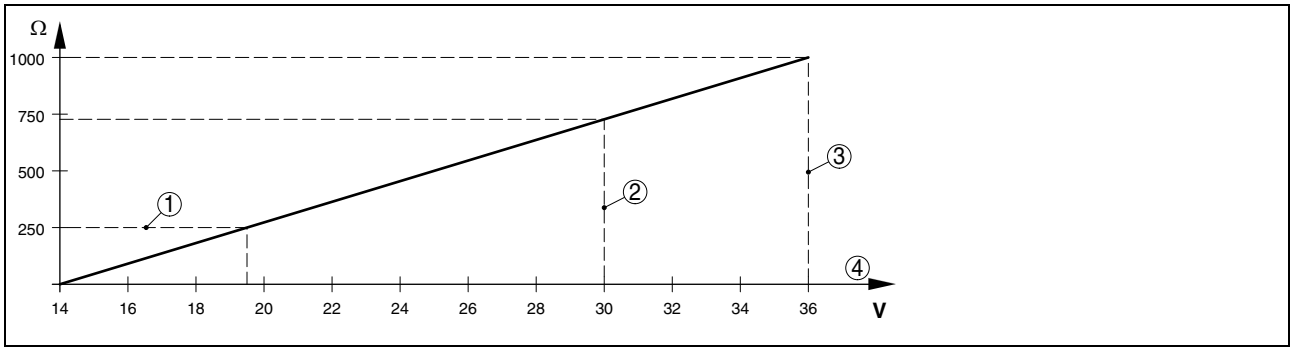

Fig. 24: Voltage diagram

1 HART load
2 Voltage limit EEx-ia instrument
3 Voltage limit non-Ex/Exd instrument
4 Supply voltage

Profibus PA

Supply voltage	
– Non-Ex instrument	9 … 32 V DC
– EEx-ia instrument	9 … 24 V DC
Power supply by/max. number of sensors	
– DP/PA segment coupler	max. 32 (max. 10 with Ex)
– VEGALOG 571 EP card	max. 15 (max. 10 with Ex)

Foundation Fieldbus

Supply voltage	
– Non-Ex instrument	9 … 32 V DC
– EEx-ia instrument	9 … 24 V DC
Power supply by/max. number of sensors	
– H1 Fieldbus cable/Voltage supply	max. 32 (max. 10 with Ex)

Power supply VEGAFLEX - four-wire instrument

4 … 20 mA

Supply voltage	
– Non-Ex and EEx-d instrument	20 … 72 V DC, 20 … 253 V AC, 50/60 Hz
Max. power consumption	4 VA; 2.1 W

Electrical protective measures

Protection	
– Plastic housing	IP 66/IP 67
– Double chamber Alu-housing, four-wire instruments	IP 66/IP 67
– Alu and stainless steel housing, two-wire instruments	IP 66/IP 68 (0.2 bar)[4]
Overvoltage category	III

[4] A suitable cable is the prerequisite for maintaining the protection class.

Protection class	
– two-wire, Profibus PA, Foundation Fieldbus	II
– four-wire	I

Approvals[5)]

VEGAFLEX 61, 62	
ATEX	ATEX II 1G, 1/2G, 2G EEx ia IIC T6 ATEX II 1/2G, 2G EEx d ia IIC T6, ATEX II 1/2D IP66 T, WHG
FM	FM Cl.I, Div 2 (NI) + Cl.II, III, Div 1 (DIP) FM Cl.I-III, Div 1 (IS) FM Cl.I-III, Div 1 (IS) + Cl.I-III, Div 1 Gr.C-G(XP)
CSA	CSA Cl.I, Div 2 (NI) + Cl.II, III, Div 1 (DIP) CSA Cl.I-III, Div 1 (IS) CSA Cl.I-III, Div 1 (IS) + Cl.I-III, Div 1 Gr.C-G(XP)
Ship approvals	
VEGAFLEX 66	
ATEX	ATEX II 1G, 1/2G, 2G EEx ia IIC T6 ATEX II 1/2G, 2G EExd ia IIC T6
FM	FM Cl.I, Div 2 (NI) + Cl.II, III, Div 1 (DIP) FM Cl.I-III, Div 1 (IS) FM Cl.I-III, Div 1 (IS) + Cl.I-III, Div 1 Gr.C-G(XP)

CE conformity

EMVG (89/336/EWG), Emission: EN 61326: 1997 (class B),
Susceptibility: EN 61326: 1997/A1: 1998
LVD (73/23/EWG), EN 61010-1: 2001
NAMUR recommendation NE 21

Functional safety (SIL)

You can find detailed information in the Safety Manual of VEGAFLEX or under www.vega.com.

Functional safety according to IEC 61508/IEC 61511	
– Single channel architecture (1oo1D)	up to SIL2
– Multiple channel architecture	see "*Safety Manual*"

Environmental instructions

VEGA environment management system	certified according to DIN EN ISO 14001

You can find detailed information under www.vega.com.

[5)] Deviating data in Ex applications: see separate safety instructions.

29658-EN-071204

7 Dimensions

Housing in protection IP 66/IP 67 and IP 66/IP 68; 0.2 bar

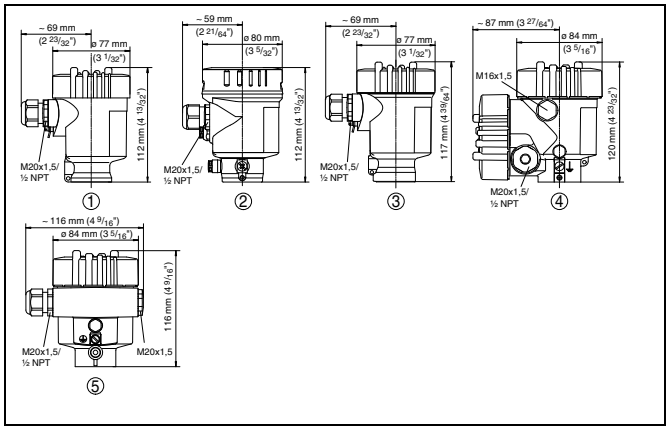

Fig. 25: Housing versions in protection IP 66/IP 67 and IP 66/IP 68, 0.2 bar (with integrated indicating and adjustment module the housing height increases by 9 mm/ 0.35 in)

1 *Plastic housing*
2 *Stainless steel housing*
3 *Stainless steel housing - precision casting*
4 *Aluminium double chamber housing*
5 *Aluminium housing*

VEGAFLEX 61 - cable and rod version

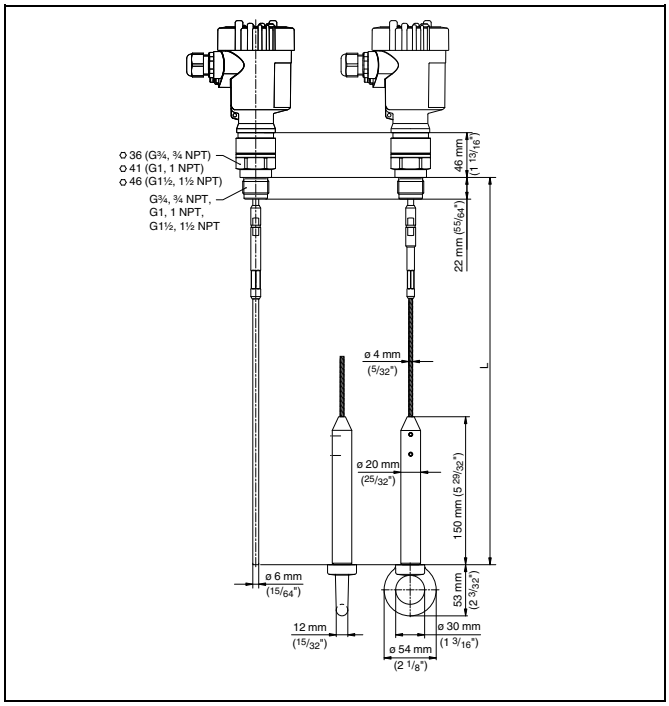

Fig. 26: VEGAFLEX 61 - cable and rod version with thread

L Sensor length, see chapter "Technical data"

VEGAFLEX 61 - cable and rod version with double chamber housing

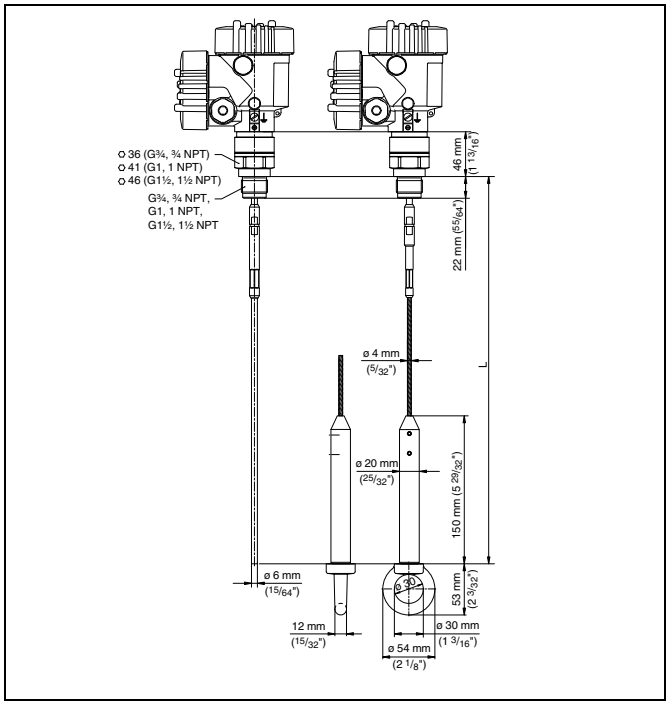

Fig. 27: VEGAFLEX 61 in cable and rod version with thread (double chamber housing)

L Sensor length, see chapter "Technical data"

VEGAFLEX 62 - cable and rod version

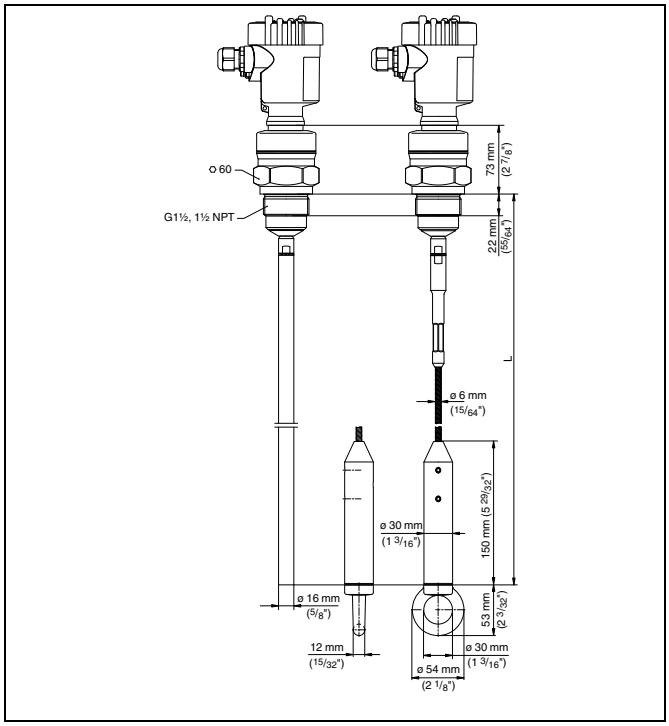

Fig. 28: VEGAFLEX 62 - cable and rod version with thread

L Sensor length, see chapter "Technical data"

29658-EN-071204

VEGAFLEX 62 - cable and rod version with double chamber housing

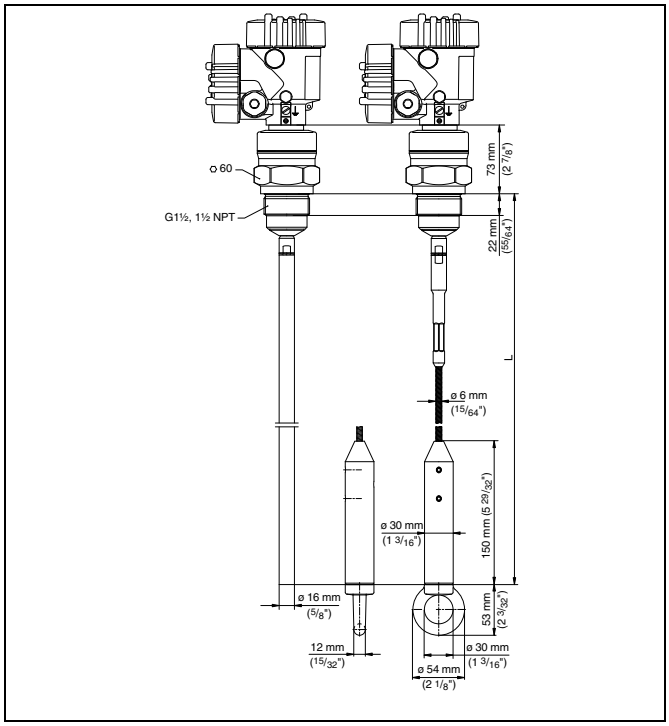

Fig. 29: VEGAFLEX 62 - cable and rod version with thread (double chamber housing)

L Sensor length, see chapter "Technical data"

VEGAFLEX 66 - cable, rod version (-200 … +400 °C/-328 … +752 °F)

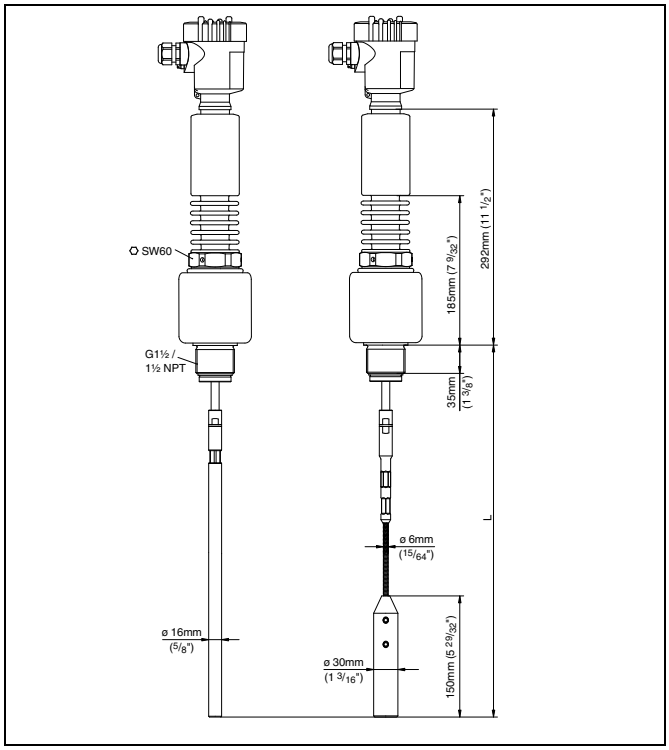

Fig. 30: VEGAFLEX 66 - cable, rod version (-200 … +400 °C/-328 … +752 °F)

L Sensor length, see chapter "Technical data"

29658-EN-071204

VEGAFLEX 66 - cable, rod version with double chamber housing (-200 … +400 °C/-328 … +752 °F)

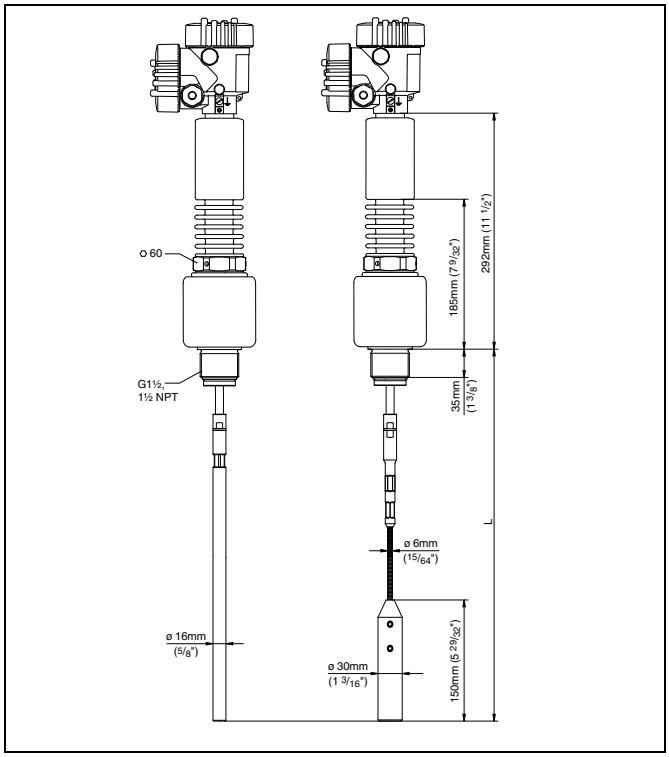

Fig. 31: VEGAFLEX 66 - cable, rod version (-200 … +400 °C/-328 … +752 °F) - double chamber housing

L Sensor length, see chapter "Technical data"

29658-EN-071204

8 Product code

VEGAFLEX 61

Approval
- **XX** without
- **XM** Ship approval
- **CX** ATEX II 1G, 1/2G, 2G EEx ia IIC T6
- **CA** ATEX II 1G, 1/2G, 2G EEx ia IIC T6 + WHG
- **CM** ATEX II 1G, 1/2G, 2G EEx ia IIC T6 + Ship approval
- **DX** ATEX II 1/2G, 2G EEx d ia IIC T6 [1)]
- **GX** ATEX II 1/2 D, 2D IP6X T [2)]

Version / Material
- **A** Exchangeable cable ø4 mm with gravity weight / 316
- **C** Exchangeable rod ø6 mm / 316L

Process fitting / Material
- **GB** Thread G¾A PN40 / 316L
- **NB** Thread ¾NPT PN40 / 316L
- **GC** Thread G1A PN40 / 316L
- **NC** Thread 1NPT PN40 / 316L
- **GD** Thread G1½A PN40 / 316L
- **ND** Thread 1½NPT PN40 / 316L
- **FA** Flange DN25PN40 Form C, DIN2501 / 316L
- **FB** Flange DN40PN40 Form C, DIN2501 / 316L
- **FC** Flange DN50PN40 Form C, DIN2501 / 316L
- **FD** Flange DN80PN40 Form C, DIN2501 / 316L
- **AA** Flange 1" 150lb RF, ANSI B16.5 / 316L
- **AE** Flange 2" 150lb RF, ANSI B16.5 / 316L
- **AI** Flange 3" 150lb RF, ANSI B16.5 / 316L

Seal / Process temperature
- **1** FKM (Viton) / -40...150°C
- **2** Kalrez 6375 / -20...150°C
- **3** EPDM / -40...150°C

Electronics
- **H** Two-wire 4...20mA/HART®
- **V** Four-wire 4...20mA/HART® [1)]
- **P** Profibus PA
- **F** Foundation Fieldbus

Housing / Protection
- **K** Plastic / IP66/IP67
- **A** Aluminium / IP66/IP68 (0.2 bar)
- **D** Aluminium double chamber / IP66/IP68 (0.2 bar)
- **8** StSt (electropolished) 316L / IP66/IP68 (0.2bar)

Cable entry / Plug connection
- **M** M20x1.5 / without
- **N** ½NPT/without

Indicating/adjustment module (PLICSCOM)
- **X** Without
- **A** Top mounted

Additional equipment
- **X** without

FX61. ☐☐☐☐☐☐☐☐☐

[1)] Only in conjunction with Housing / Protection "D"
[2)] Not in conjunction with Housing / Protection "K"

VEGAFLEX 62

Approval
- **XX** without
- **XM** Ship approval
- **CX** ATEX II 1G, 1/2G, 2G EEx ia IIC T6
- **CA** ATEX II 1G, 1/2G, 2G EEx ia IIC T6 + WHG
- **CM** ATEX II 1G, 1/2G, 2G EEx ia IIC T6 + Ship approval
- **DX** ATEX II 1/2G, 2G EEx d ia IIC T6 [1)]
- **GX** ATEX II 1/2 D, 2D IP6X T [2)]

Version / Material
- **A** Exchangeable cable ø 6mm w. gravity weight / 316
- **C** Exchangeable rod ø 16mm / 316L

Process fitting / Material
- **GD** Thread G1½A PN40 / 316L
- **ND** Thread 1½NPT PN40 / 316L
- **FC** Flange DN50PN40 Form C,DIN2501/316L
- **FD** Flange DN80PN40 Form C,DIN2501/316L
- **FE** Flange DN100PN16 Form C,DIN2501/316L
- **AE** Flange 2"150lb RF,ANSI B16.5/316L
- **AF** Flange 2"300lb RF,ANSI B16.5/316L

Seal / Process temperature
- **1** FKM (Viton) / -40...150°C
- **2** Kalrez 6375 / -20...150°C
- **3** EPDM / -40...150°C

Electronics
- **H** Two-wire 4...20mA/HART®
- **V** Four-wire 4...20mA/HART® [1)]
- **P** Profibus PA
- **F** Foundation Fieldbus

Housing / Protection
- **K** Plastic / IP66/IP67
- **A** Aluminium / IP66/IP68 (0.2 bar)
- **D** Aluminium double chamber / IP66/IP68 (0.2 bar)
- **8** StSt (electropolished) 316L / IP66/IP68 (0.2bar)

Cable entry / Plug connection
- **M** M20x1.5 / without
- **N** ½NPT/without

Indicating/adjustment module (PLICSCOM)
- **X** Without
- **A** Top mounted

Additional equipment
- **X** without

FX62. ☐☐☐☐☐☐☐☐☐

[1)] Only in conjunction with Housing / Protection "D"
[2)] Not in conjunction with Housing / Protection "K"

29658-EN-071204

VEGAFLEX 66

Approval
- **XX** without
- **CX** ATEX II 1G, 1/2G, 2G EEx ia IIC T6
- **CA** ATEX II 1G, 1/2G, 2G EEx ia IIC T6 + WHG
- **DX** ATEX II 1/2G, 2G EEx d ia IIC T6 [1)]
- **DA** ATEX II 1/2G, 2G EEx d ia IIC T6 + WHG [1)]

Version / Material / Process temperature
- **S** Exchangeab. cable ø4mm,gravity weight/316/-20..250°C
- **C** Exchangeable rod ø6mm / 316L / -20...250°C
- **A** Coaxial probe (w. 4 fold boring) / 316L / -20...250°C
- **T** Exchangeab. cable ø4mm gravity weight/316/-110...400°C
- **O** Exchangeable rod ø6 mm / 316L / -110...400°C
- **K** Coaxial probe (w. 4-fold boring) / 316L / -110...400°C
- **U** Exchangeab. cable ø6mm,gravity weight/316 /-200..400°C
- **I** Exchangeable rod ø16mm / 316L / -200...400°C
- **M** Coaxial probe (w. vent. hole) / 316L / -200...400°C

Process fitting / Material
- **GB** Thread G¾A PN100 / 316L
- **NB** Thread ¾NPT PN100 / 316L
- **GC** Thread G1A PN100 / 316L
- **NC** Thread 1NPT PN100 / 316L
- **GD** Thread G1½A PN100 / 316L
- **ND** Thread 1½NPT PN100 / 316L
- **FB** Flange DN40PN40 Form C, DIN2501 / 316L
- **FC** Flange DN50PN40 Form C, DIN2501 / 316L
- **FD** Flansch DN80PN40 Form C, DIN2501 / 316L
- **AE** Flange 2" 150lb RF, ANSI B16.5 / 316L
- **AI** Flange 3" 150lb RF, ANSI B16.5 / 316L

Seal
- **2** Kalrez 6375
- **H** Graphite

Electronics
- **H** Two-wire 4...20mA/HART®
- **P** Profibus PA
- **F** Foundation Fieldbus

Housing / Protection
- **K** Plastic / IP66/IP67
- **A** Aluminium / IP66/IP68 (0.2 bar)
- **D** Aluminium double chamber / IP66/IP68 (0.2 bar)
- **8** StSt (electropolished) 316L / IP66/IP68 (0.2bar)

Cable entry / Plug connection
- **M** M20x1.5 / without
- **N** ½NPT/without

Indicating/adjustment module (PLICSCOM)
- **X** Without
- **A** Top mounted

Additional equipment
- **X** without

FX66. [ ][ ][ ][ ][ ][ ][ ][ ][ ]

[1)] Only in conjunction with Housing / Protection "D"

29658-EN-071204

VEGA Grieshaber KG
Am Hohenstein 113
77761 Schiltach
Germany
Phone +49 7836 50-0
Fax +49 7836 50-201
E-Mail: info@de.vega.com
www.vega.com

You can find at **www.vega.com**
downloads of the following

- operating instructions manuals
- menu schematics
- software
- certificates
- approvals

and much, much more

Operating Instructions

VEGAFLEX 61

4 … 20 mA/HART two-wire

Document ID:
31833

Guided Microwave

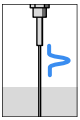

Contents

1 About this document

1.1 Function 4
1.2 Target group 4
1.3 Symbolism used 4

2 For your safety

2.1 Authorised personnel 5
2.2 Appropriate use 5
2.3 Warning about misuse 5
2.4 General safety instructions 5
2.5 Safety label on the instrument 6
2.6 CE conformity 6
2.7 Fulfillment of NAMUR recommendations 6
2.8 Safety instructions for Ex areas 6
2.9 Environmental instructions 6

3 Product description

3.1 Structure 7
3.2 Principle of operation 8
3.3 Operation 9
3.4 Packaging, transport and storage 9

4 Mounting

4.1 General instructions 11
4.2 Mounting instructions 12

5 Connecting to power supply

5.1 Preparing the connection 18
5.2 Connection procedure 19
5.3 Wiring plan, single chamber housing 20
5.4 Wiring plan, double chamber housing 21
5.5 Wiring plan with double chamber housing Ex d 23
5.6 Wiring plan - version IP 66/IP 68, 1 bar 25

6 Set up with the indicating and adjustment module PLICSCOM

6.1 Short description 26
6.2 Insert indicating and adjustment module 26
6.3 Adjustment system 28
6.4 Setup steps 29
6.5 Menu schematic 35
6.6 Saving the parameter adjustment data 37

7 Set up with PACTware and other adjustment programs

7.1 Connecting the PC 38
7.2 Parameter adjustment with PACTware 39
7.3 Parameter adjustment with AMS™ and PDM 40
7.4 Saving the parameter adjustment data 40

8 Maintenance and fault rectification

8.1 Maintenance 41
8.2 Rectify malfunctions 41
8.3 Exchange or shorten cable/rod 43
8.4 Exchanging the electronics module 44
8.5 Software update 45
8.6 Instrument repair 46

9 Dismounting

9.1 Dismounting steps 47
9.2 Disposal 47

10 Supplement

10.1 Technical data 48
10.2 Dimensions 59

Supplementary documentation

Information:
Supplementary documents appropriate to the ordered version come with the delivery. You can find them listed in chapter "*Product description*".

Instructions manuals for accessories and replacement parts

Tip:
To ensure reliable setup and operation of your VEGAFLEX 61, we offer accessories and replacement parts. The corresponding documentations are:

- 27720 - VEGADIS 61
- 30207 - Electronics module VEGAFLEX series 60
- 34296 - Protective cover
- 31088 - Flanges according to DIN-EN-ASME-JIS-GOST
- 30391 - Spacer

1 About this document

1.1 Function

This operating instructions manual provides all the information you need for mounting, connection and setup as well as important instructions for maintenance and fault rectification. Please read this information before putting the instrument into operation and keep this manual accessible in the immediate vicinity of the device.

1.2 Target group

This operating instructions manual is directed to trained qualified personnel. The contents of this manual should be made available to these personnel and put into practice by them.

1.3 Symbolism used

Information, tip, note
This symbol indicates helpful additional information.

Caution: If this warning is ignored, faults or malfunctions can result.
Warning: If this warning is ignored, injury to persons and/or serious damage to the instrument can result.
Danger: If this warning is ignored, serious injury to persons and/or destruction of the instrument can result.

Ex applications
This symbol indicates special instructions for Ex applications.

- **List**
  The dot set in front indicates a list with no implied sequence.

→ **Action**
This arrow indicates a single action.

1 **Sequence**
Numbers set in front indicate successive steps in a procedure.

2 For your safety

2.1 Authorised personnel

All operations described in this operating instructions manual must be carried out only by trained specialist personnel authorised by the plant operator.

During work on and with the device the required personal protective equipment must always be worn.

2.2 Appropriate use

VEGAFLEX 61 is a sensor for continuous level measurement.

You can find detailed information on the application range in chapter "*Product description*".

Operational reliability is ensured only if the instrument is properly used according to the specifications in the operating instructions manual as well as possible supplementary instructions.

For safety and warranty reasons, any invasive work on the device beyond that described in the operating instructions manual may be carried out only by personnel authorised by the manufacturer. Arbitrary conversions or modifications are explicitly forbidden.

2.3 Warning about misuse

Inappropriate or incorrect use of the instrument can give rise to application-specific hazards, e.g. vessel overfill or damage to system components through incorrect mounting or adjustment.

2.4 General safety instructions

This is a high-tech instrument requiring the strict observance of standard regulations and guidelines. The user must take note of the safety instructions in this operating instructions manual, the country-specific installation standards as well as all prevailing safety regulations and accident prevention rules.

The instrument must only be operated in a technically flawless and reliable condition. The operator is responsible for trouble-free operation of the instrument.

During the entire duration of use, the user is obliged to determine the compliance of the required occupational safety measures with the current valid rules and regulations and also take note of new regulations.

2.5 Safety label on the instrument

The safety approval markings and safety tips on the device must be observed.

2.6 CE conformity

This device fulfills the legal requirements of the applicable EC guidelines. By attaching the CE mark, VEGA provides a confirmation of successful testing. You can find the CE conformity declaration in the download area of www.vega.com.

2.7 Fulfillment of NAMUR recommendations

With respect to compatibility, the NAMUR recommendation NE 53 is fulfilled. This applies also to the corresponding indicating and adjustment components. VEGA instruments are generally upward and downward compatible.

- Sensor software to DTM VEGAFLEX 61
- DTM VEGAFLEX 61 for adjustment software PACTware
- Indicating and adjustment module for sensor software

The parameter adjustment of the basic sensor functions is independent of the software version. The range of available functions depends on the respective software version of the individual components.

2.8 Safety instructions for Ex areas

Please note the Ex-specific safety information for installation and operation in Ex areas. These safety instructions are part of the operating instructions manual and come with the Ex-approved instruments.

2.9 Environmental instructions

Protection of the environment is one of our most important duties. That is why we have introduced an environment management system with the goal of continuously improving company environmental protection. The environment management system is certified according to DIN EN ISO 14001.

Please help us fulfil this obligation by observing the environmental instructions in this manual:

- Chapter "*Packaging, transport and storage*"
- Chapter "*Disposal*"

3 Product description

3.1 Structure

Scope of delivery

The scope of delivery encompasses:

- VEGAFLEX 61 level sensor
- Documentation
  - this operating instructions manual
  - Safety Manual 31339 "*VEGAFLEX series 60 - 4 … 20 mA/HART*" (optionally)
  - Operating instructions manual 27835 "*Indicating and adjustment module PLICSCOM*" (optional)
  - Supplementary instructions manual 31708 "*Heating for indicating and adjustment module*" (optional)
  - Supplementary instructions manual "*Plug connector for continuously measuring sensors*" (optional)
  - Ex-specific "*Safety instructions*" (with Ex versions)
  - if necessary, further certificates

Constituent parts

The VEGAFLEX 61 consists of the components:

- Process fitting with probe
- Housing with electronics
- Housing cover, optionally available with indicating and adjustment module

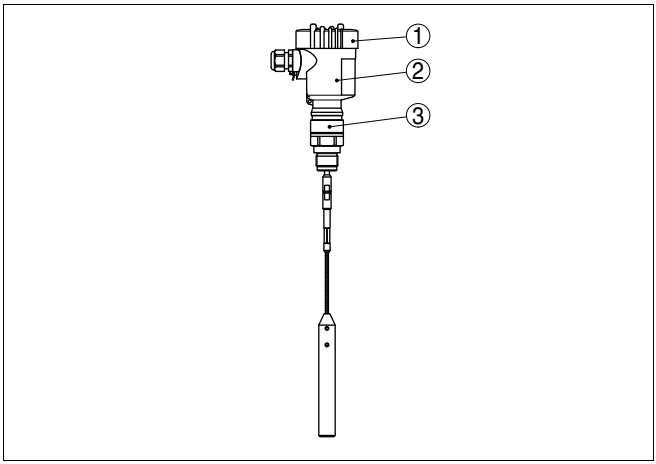

Fig. 1: VEGAFLEX 61 in cable version with plastic housing

1 Housing cover with integrated indicating and adjustment module (optional)
2 Housing with electronics
3 Process fitting

Type label

The type label contains the most important data for identification and use of the instrument:

- Article number
- Serial number
- Technical data
- Article numbers, documentation
- SIL identification (with SIL rating ex works)

With the serial number, you can access the delivery data of the instrument via www.vega.com, "*VEGA Tools*" and "*serial number search*". In addition to the type label outside, you can also find the serial number on the inside of the instrument.

3.2 Principle of operation

Application area

VEGAFLEX 61 is a level sensor with cable or rod probe for continuous level measurement.

It is designed for industrial use in all areas of process technology and can be used equally well in liquids or solids.

Functional principle

High frequency microwave pulses are guided along a steel rope or a rod. Upon reaching the product surface, the microwave pulses are reflected. The running time is evaluated by the instrument and outputted as distance.

Voltage supply

Two-wire electronics 4 … 20 mA/HART for power supply and measured value transmission over the same cable.

The supply voltage range can differ depending on the instrument version.

The data for power supply are specified in chapter "*Technical data*".

The optional background lighting of the indicating and adjustment module is powered by the sensor. A certain level of operating voltage is required for this. You can find the exact voltage specifications in chapter "*Technical data*".

The optional heating requires its own operating voltage. You can find details in the supplementary instructions manual "*Heating for indicating and adjustment module*".

This function is generally not available for approved instruments.

3.3 Operation

VEGAFLEX 61 can be adjusted with different adjustment media:

- with indicating and adjustment module
- with the suitable VEGA DTM in conjunction with an adjustment software according to the FDT/DTM standard, e.g. PACTware and PC
- with manufacturer-specific adjustment programs AMS™ or PDM
- With a HART handheld

3.4 Packaging, transport and storage

Packaging

Your instrument was protected by packaging during transport. Its capacity to handle normal loads during transport is assured by a test according to DIN EN 24180.

The packaging of standard instruments consists of environment-friendly, recyclable cardboard. For special versions, PE foam or PE foil is also used. Dispose of the packaging material via specialised recycling companies.

Transport

Transport must be carried out under consideration of the notes on the transport packaging. Nonobservance of these instructions can cause damage to the device.

Transport inspection

The delivery must be checked for completeness and possible transit damage immediately at receipt. Ascertained transit damage or concealed defects must be appropriately dealt with.

Storage

Up to the time of installation, the packages must be left closed and stored according to the orientation and storage markings on the outside.

Unless otherwise indicated, the packages must be stored only under the following conditions:

- Not in the open

- Dry and dust free
- Not exposed to corrosive media
- Protected against solar radiation
- Avoiding mechanical shock and vibration

Storage and transport temperature

- Storage and transport temperature see chapter "*Supplement - Technical data - Ambient conditions*"
- Relative humidity 20 … 85 %

4 Mounting

4.1 General instructions

Suitability for the process conditions

Make sure that all parts of the instrument exposed to the process, in particular the sensor element, process seal and process fitting, are suitable for the existing process conditions. These include above all the process pressure, process temperature as well as the chemical properties of the medium.

You can find the specifications in chapter "*Technical data*" or on the type label.

Mounting position

Select an installation position you can easily reach for mounting and connecting as well as later retrofitting of an indicating and adjustment module. The housing can be rotated by 330° without the use of any tools. You can also install the indicating and adjustment module in four different positions (each displaced by 90°).

Welding work

Before beginning the welding work, remove the electronics module from the sensor. By doing this, you avoid damage to the electronics through inductive coupling.

Handling

With threaded versions, the housing must not be used to screw in the instrument! Applying tightening forces on the housing can damage its internal parts.

Use the hexagon for screwing in.

Moisture

Use the recommended cables (see chapter "*Connecting to power supply*") and tighten the cable gland.

You can give your instrument additional protection against moisture penetration by leading the connection cable downward in front of the cable entry. Rain and condensation water can thus drain off. This applies mainly to outdoor mounting as well as installation in areas where high humidity is expected (e.g. through cleaning processes) or on cooled or heated vessels.

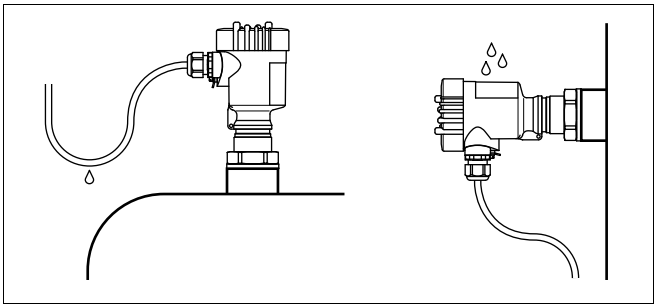

Fig. 2: Measures against moisture penetration

Measuring range

The reference plane for the measuring range of the sensors is the sealing surface of the thread or flange.

Keep in mind that a min. distance must be maintained below the reference plane and possibly also at the end of the probe - measurement in these areas is not possible (dead band). Keep in mind that the cable length cannot be used all the way to the end because measurement in the area of the gravity weight is not possible. These dead bands are listed in chapter "*Technical data*". Keep in mind for the adjustment that the default setting for the measuring range refers to water.

Pressure

The process fitting must be sealed if there is gauge or low pressure in the vessel. Before use, check if the seal material is resistant against the measured product and the process temperature.

The max. permissible pressure is specified in chapter "*Technical data*" or on the type label of the sensor.

4.2 Mounting instructions

Mounting position

Mount VEGAFLEX 61 in such a way that the distance to vessel installations or to the vessel wall is at least 300 mm (12 in).

During operation, the probe must not touch any installations or the vessel wall. If necessary, fasten the probe end.

In vessels with conical bottom it can be advantageous to mount the sensor in the center of the vessel, as measurement is then possible down to the lowest point of the bottom. When using the cable version,

keep in mind that measurement down to the tip of the probe is not possible. The exact value of the min. distance (lower dead band) is stated in chapter "*Technical data*".

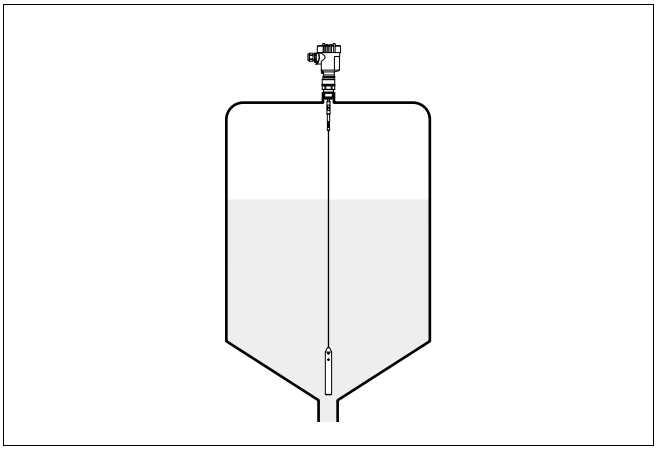

Fig. 3: Vessel with conical bottom

Vessel type

Plastic vessel/Glass vessel

The guided microwave principle requires a metal surface on the process fitting. Therefore use in plastic vessels etc. an instrument version with flange (from DN 50) or place a metal sheet (ø > 200 mm/ 8 in) beneath the process fitting when screwing it in.

Make sure that the plate has direct contact with the process fitting.

In bypass tubes of plastic, a metal screen must be provided on the outside. You can glue metal foil, for example, on the outside along the entire length of the tube. This metal screen must be connected to the ground terminal on the instrument.

When installing rod or cable probes without metal vessel wall, e.g. in plastic vessels, the measured value can be influenced by strong electromagnetic fields (emitted interference according to EN 61326: class A).

In this case, use a probe in coax version.

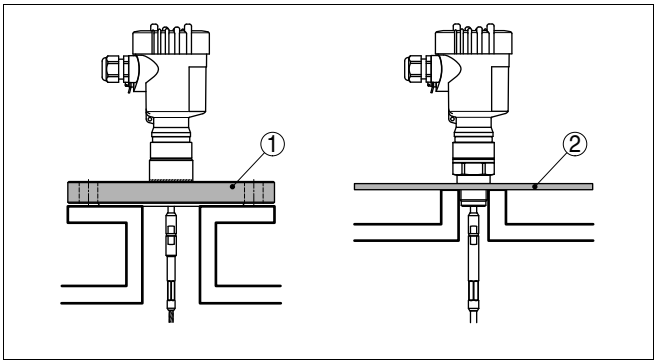

Fig. 4: Installation in plastic silo

1 Flange
2 Metal sheet

Concrete vessel

When installed in thick concrete ceilings, VEGAFLEX 61 should be mounted front flush to the lower edge. In concrete silos, the distance to the wall should be at least 500 mm (20 in).

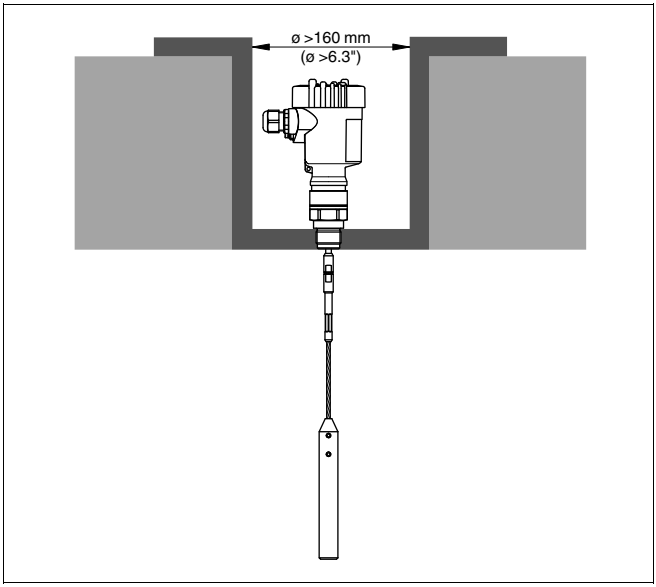

Fig. 5: Installation in concrete silo

Socket

If possible, avoid sockets. Mount the sensor flush with the vessel top. If this is not possible, use short sockets with small diameter.

Higher sockets or sockets with a bigger diameter can generally be used. They simply increase the upper dead band. Check if this is relevant for your measurement.

In such cases, always carry out a gating out of false signals after installation. You can find further information under "Setup procedure".

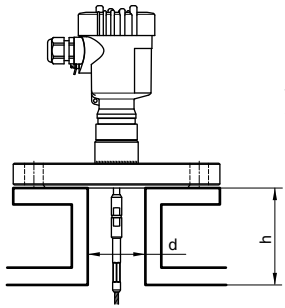

d	h
DN40 ... DN150	£ 150
> DN150 ... DN200	£ 100

Fig. 6: Mounting socket

When welding the socket, make sure that the socket is flush to the vessel wall.

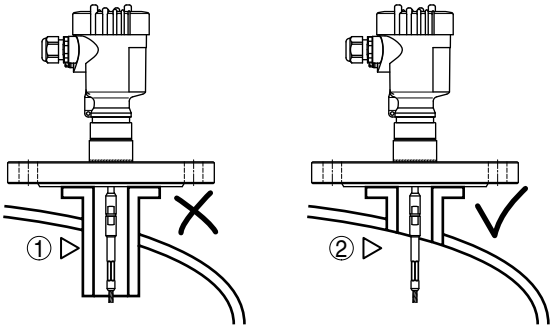

Fig. 7: Socket must be installed flush

1 Unfavourable installation
2 Socket flush - optimum installation

Standpipes or bypass tubes

Standpipes or bypass tubes are normally metal tubes with a diameter of 30 … 200 mm (1.18 … 7.87 in). In measurement technology such a tube corresponds to a coax probe. It does not matter if the standpipe is perforated or slotted for better mixing. Lateral inlets with bypass tubes also do not influence the measurement.

Measuring probes can be mounted in bypass tubes up to DN 200.

If VEGAFLEX 61 is used in standpipes or bypass tubes, contact with the tube wall should be avoided. We offer spacers as accessories for fastening the probe in the middle of the tube.

Depending on the tube diameter or tube length, one or several spacers can be mounted. With cable probes, the cable can also be strained to avoid contact with the tube.

Keep in mind that buildup can form on the spacers. Strong buildup can influence the measurement.

Microwaves can penetrate plastics. For process technical reasons, plastic standpipes are problematic. If durability is no problem, then we recommend the use of metal standpipes.

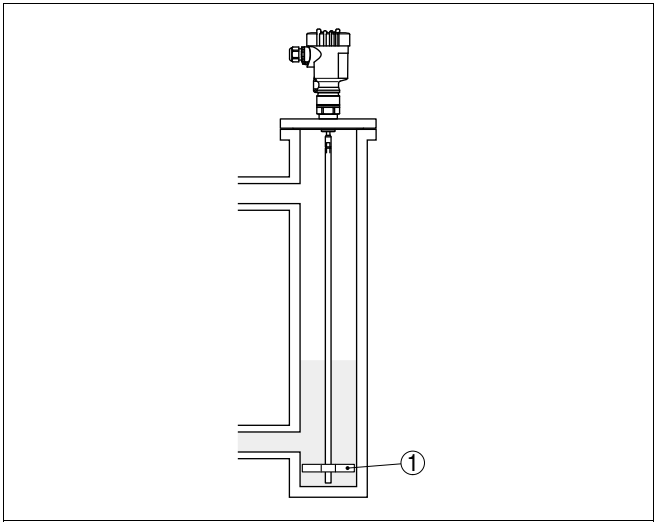

Fig. 8: Position of the spacer

1 Spacer

Note:
Measurement in a standpipe is not recommended for very adhesive products.

Inflowing medium

Make sure that the probe is not subjected to strong lateral forces. Mount VEGAFLEX 61 at a position in the vessel where no disturbances, e.g. from filling openings, agitators, etc., can occur.

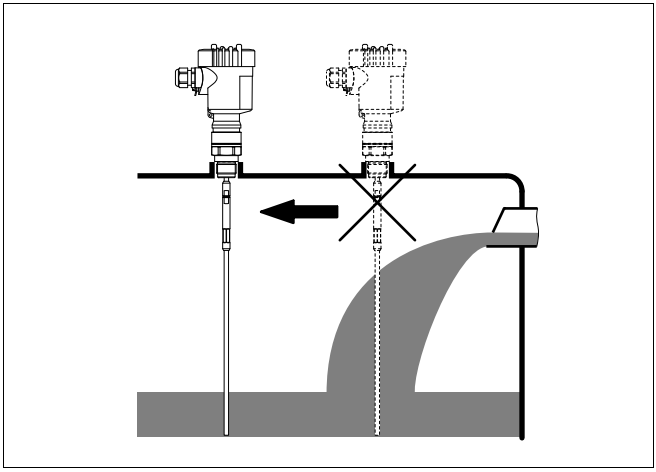

Fig. 9: Lateral load

Fixing

If there is a danger of the probe touching the vessel wall during operation due to product movements or agitators etc., the measuring probe should be securely fixed.

In the gravity weight there is a thread (M12), e.g. for a ring bolt (optionally) - (article no. 2.27424).

Make sure that the probe cable is not completely taut. Avoid tensile loads on the cable.

Avoid undefined cable-vessel connections, i.e. the connection must be either grounded reliably or isolated reliably. Any deviation from this requirement can lead to measurement errors.

5 Connecting to power supply

5.1 Preparing the connection

Safety instructions

Always keep in mind the following safety instructions:

- Connect only in the complete absence of line voltage
- If overvoltage surges are expected, overvoltage arresters should be installed

Tip:
We recommend using VEGA overvoltage arresters B63-48 and ÜSB 62-36G.X.

In hazardous areas you should take note of the appropriate regulations, conformity and type approval certificates of the sensors and power supply units.

Voltage supply

Power supply and current signal are carried on the same two-wire cable. The voltage supply range can differ depending on the instrument version.

The data for power supply are specified in chapter "*Technical data*".

Provide a reliable separation between the supply circuit and the mains circuits according to DIN VDE 0106 part 101. The VEGA power supply units VEGATRENN 149A Ex, VEGASTAB 690 as well as all VEGAMETs and VEGASCANs meet this requirement.

Keep in mind the following additional influences on the operating voltage:

- Output voltage of the power supply unit can be lower under nominal load (with a sensor current of 20.5 mA or 22 mA in case of fault message)
- Influence of additional instruments in the circuit (see load values in chapter "*Technical data*")

Connection cable

The instrument is connected with standard two-wire cable without screen. If electromagnetic interference is expected which is above the test values of EN 61326 for industrial areas, screened cable should be used.

Use cable with round cross-section. A cable outer diameter of 5 … 9 mm (0.2 … 0.35 in) ensures the seal effect of the cable gland. If you are using cable with a different diameter or cross-section, exchange the seal or use a suitable cable gland.

We generally recommend the use of screened cable for HART multidrop mode.

Cable gland ½ NPT

On the instrument with cable entry ½ NPT and plastic housing there is a metallic ½" threaded insert moulded into the plastic housing.

Caution:
No grease should be used when screwing the NPT cable gland or steel tube into the threaded insert. Standard grease can contain additives that corrode the connection between threaded insert and housing. This would influence the stability of the connection and the tightness of the housing.

Cable screening and grounding

If screened cable is necessary, connect the cable screen on both ends to ground potential. In the sensor, the screen must be connected directly to the internal ground terminal. The ground terminal on the outside of the housing must be connected to the potential equalisation (low impedance).

If potential equalisation currents are expected, the connection on the processing side must be made via a ceramic capacitor (e. g. 1 nF, 1500 V). The low frequency potential equalisation currents are thus suppressed, but the protective effect against high frequency interference signals remains.

Take note of the corresponding installation regulations for Ex applications. In particular, make sure that no potential equalisation currents flow over the cable screen. In case of grounding on both sides this can be achieved by the use of a capacitor or a separate potential equalisation.

5.2 Connection procedure

Proceed as follows:

1 Unscrew the housing cover
2 If an indicating and adjustment module is installed, remove it by turning it slightly to the left.
3 Loosen compression nut of the cable entry
4 Remove approx. 10 cm (4 in) of the cable mantle, strip approx. 1 cm (0.4 in) of insulation from the ends of the individual wires
5 Insert the cable into the sensor through the cable entry
6 Lift the opening levers of the terminals with a screwdriver (see following illustration)

7 Insert the wire ends into the open terminals according to the wiring plan

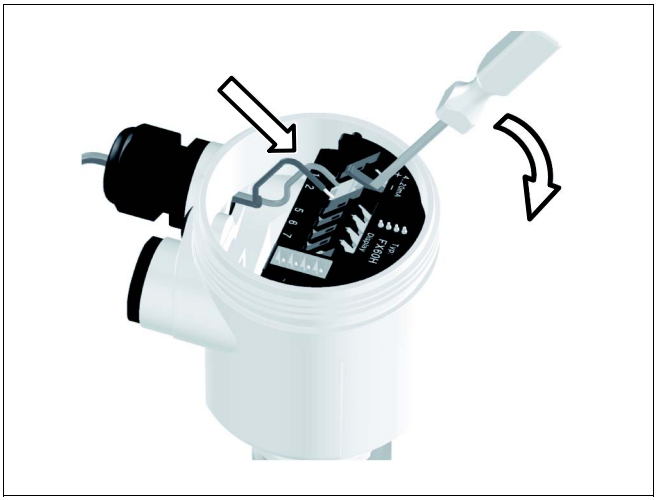

Fig. 10: Connection steps 6 and 7

8 Press down the opening levers of the terminals, you will hear the terminal spring closing

9 Check the hold of the wires in the terminals by lightly pulling on them

10 Connect the screen to the internal ground terminal, connect the outer ground terminal to potential equalisation

11 Tighten the compression nut of the cable entry. The seal ring must completely encircle the cable

12 Screw the housing cover on

The electrical connection is finished.

5.3 Wiring plan, single chamber housing

The following illustrations apply to the non-Ex as well as to the Ex-ia version.

Electronics and connection compartment

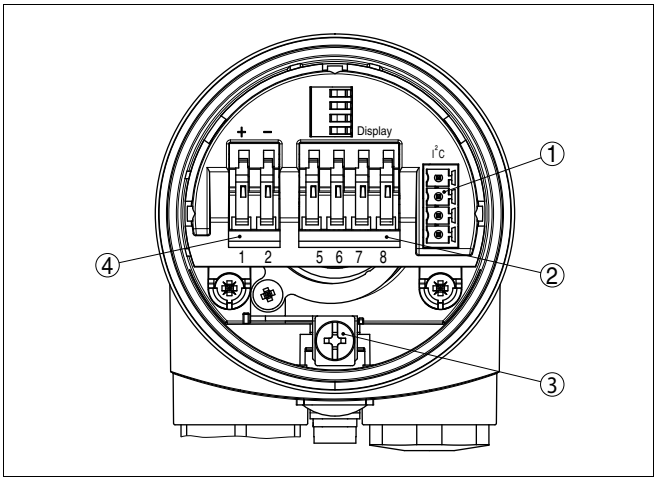

Fig. 11: Electronics and connection compartment with single chamber housing

1 *Plug connector for VEGACONNECT (I²C interface)*
2 *Spring-loaded terminals for connection of the external indication VEGADIS 61*
3 *Ground terminal for connection of the cable screen*
4 *Spring-loaded terminals for voltage supply*

Wiring plan

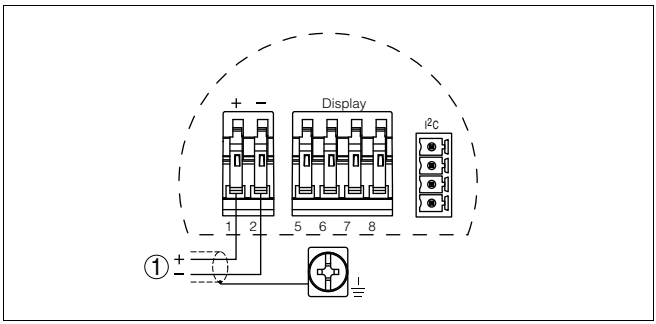

Fig. 12: Wiring plan, single chamber housing

1 *Voltage supply/Signal output*

5.4 Wiring plan, double chamber housing

The following illustration apply to non-Ex as well as Ex ia versions. The Exd version is described in the next subchapter.

Electronics compartment

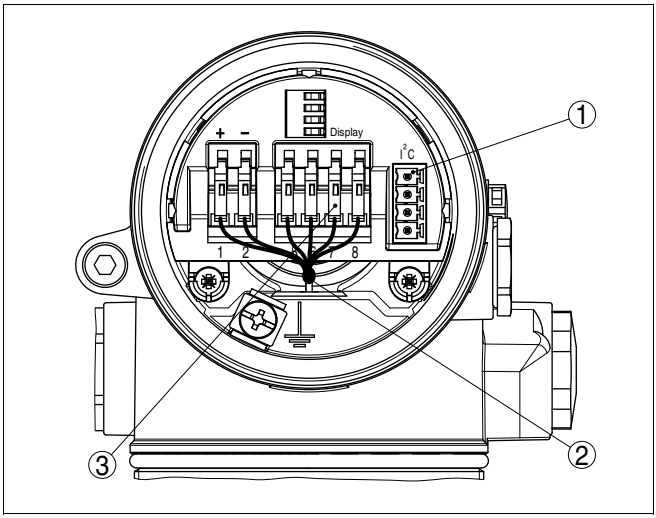

Fig. 13: Electronics compartment, double chamber housing

1 *Plug connector for VEGACONNECT (I²C interface)*
2 *Internal connection cable to the connection compartment*
3 *Terminals for VEGADIS 61*

Connection compartment

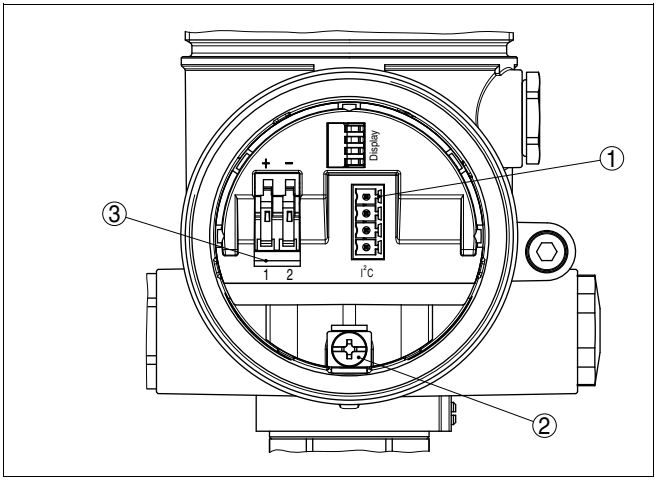

Fig. 14: Connection compartment, double chamber housing

1 *Plug connector for VEGACONNECT (I²C interface)*
2 *Ground terminal for connection of the cable screen*
3 *Spring-loaded terminals for voltage supply*

Wiring plan

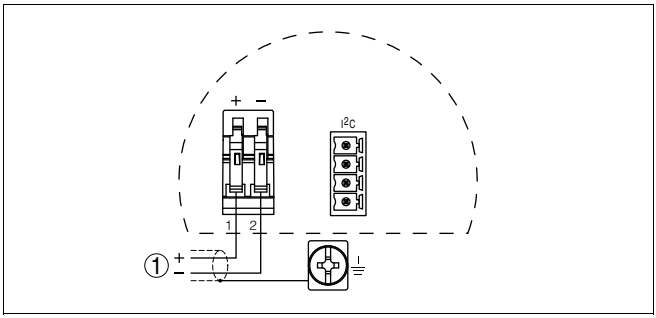

Fig. 15: Wiring plan with double chamber housing

1 Voltage supply/Signal output

5.5 Wiring plan with double chamber housing Ex d

Electronics compartment

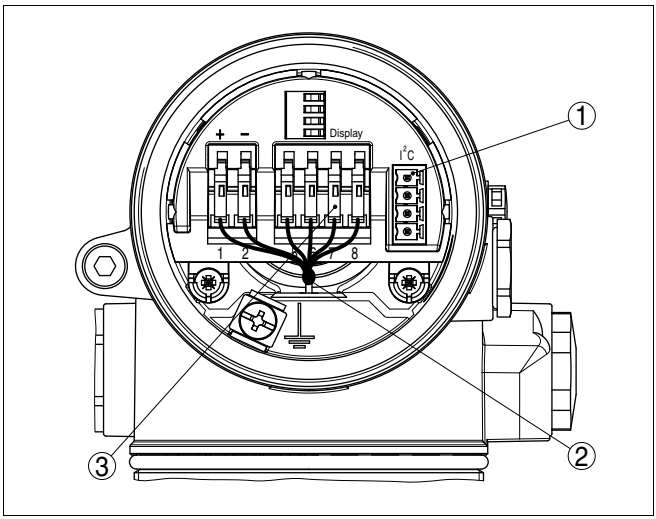

Fig. 16: Electronics compartment, double chamber housing

1 Plug connector for VEGACONNECT (I^2C interface)
2 Internal connection cable to the connection compartment
3 Terminals for VEGADIS 61

Connection compartment

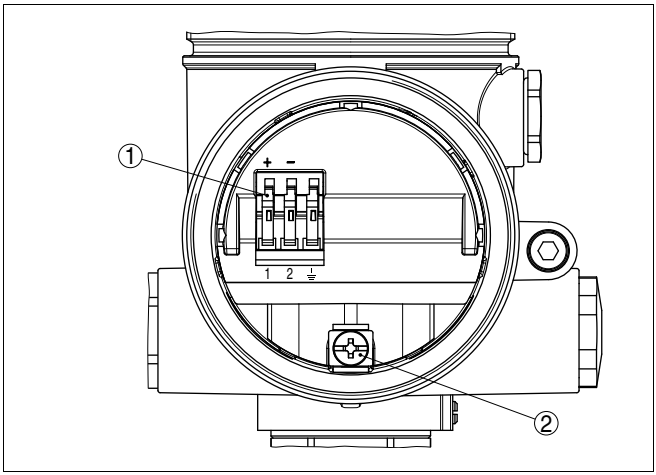

Fig. 17: Connection compartment with double chamber housing Ex d

1 Spring-loaded terminals for power supply and cable screen
2 Ground terminal for connection of the cable screen

Wiring plan

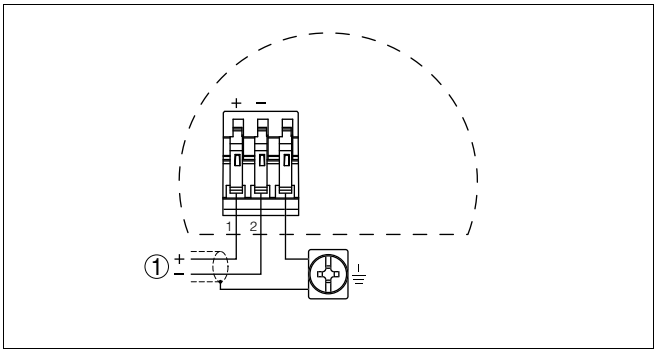

Fig. 18: Wiring plan with double chamber housing Ex d

1 Voltage supply/Signal output

31833-EN-100426

5.6 Wiring plan - version IP 66/IP 68, 1 bar

Wire assignment connection cable

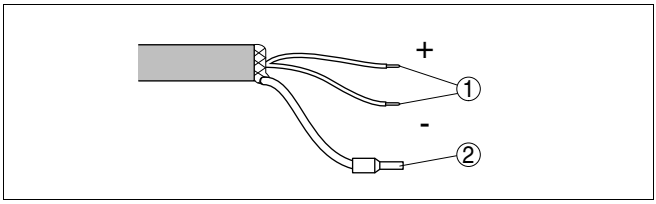

Fig. 19: Wire assignment connection cable

1 brown (+) and blue (-) to power supply or to the processing system
2 Shielding

6 Set up with the indicating and adjustment module PLICSCOM

6.1 Short description

Function/Configuration

The indicating and adjustment module is used for measured value display, adjustment and diagnosis. It can be mounted in the following housing versions and instruments:

- All sensors of the plics® instrument family, in the single as well as in the double chamber housing (optionally in the electronics or connection compartment)
- External indicating and adjustment unit VEGADIS 61

From a hardware version …- 01 or higher of the indicating and adjustment module as well as of the corresponding sensor, an integrated backlight can be switched on via the adjustment menu. The hardware version is stated on the type label of the indicating and adjustment module or the sensor electronics.

Note:
You can find detailed information on the adjustment in the operating instructions manual "*Indicating and adjustment module*".

6.2 Insert indicating and adjustment module

Mount/Dismount indicating and adjustment module

The indicating and adjustment module can be inserted into the sensor and removed again at any time. It is not necessary to interrupt the power supply.

Proceed as follows:

1 Unscrew the housing cover
2 Place the indicating and adjustment module in the desired position on the electronics (you can choose any one of four different positions - each displaced by 90°)
3 Press the indicating and adjustment module onto the electronics and turn it to the right until it snaps in.
4 Screw housing cover with inspection window tightly back on

Removal is carried out in reverse order.

The indicating and adjustment module is powered by the sensor, an additional connection is not necessary.

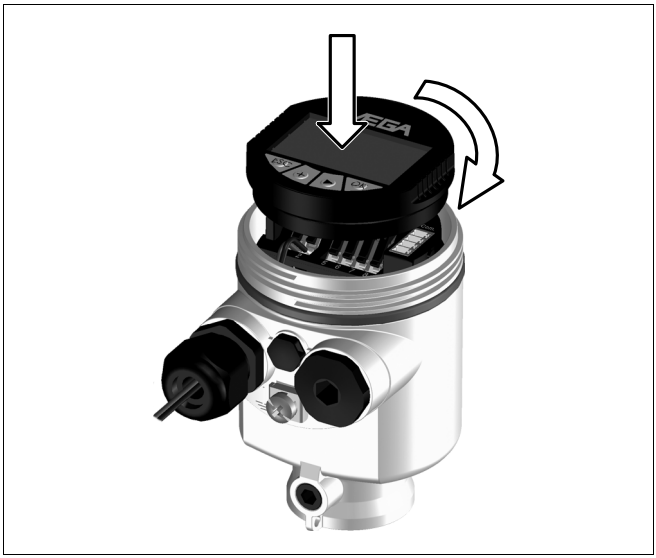

Fig. 20: Insert indicating and adjustment module

Note:
If you intend to retrofit the instrument with an indicating and adjustment module for continuous measured value indication, a higher cover with an inspection glass is required.

6.3 Adjustment system

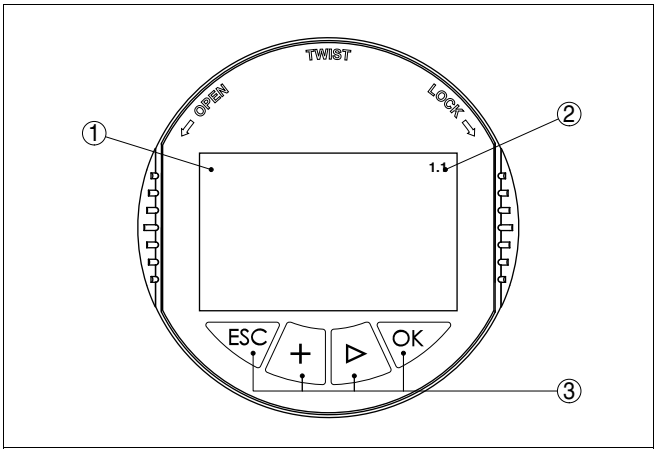

Fig. 21: Indicating and adjustment elements

1 LC display
2 Indication of the menu item number
3 Adjustment keys

Key functions

- ***[OK]*** key:
  - Move to the menu overview
  - Confirm selected menu
  - Edit parameter
  - Save value
- ***[->]*** key to select:
  - Menu change
  - Select list entry
  - Select editing position
- ***[+]*** key:
  - Change value of the parameter
- ***[ESC]*** key:
  - interrupt input
  - jump to the next higher menu

Adjustment system

The sensor is adjusted via the four keys of the indicating and adjustment module. The LC display indicates the individual menu items. The functions of the individual keys are shown in the above illustration. Approx. 10 minutes after the last pressing of a key, an automatic reset to measured value indication is triggered. Any values not confirmed with ***[OK]*** will not be saved.

6.4 Setup steps

Switch on phase

After connecting VEGAFLEX 61 to power supply or after a voltage recurrence, the instrument carries out a self-check for approx. 30 seconds:

- Internal check of the electronics
- Indication of the instrument type, the firmware as well as the sensor TAGs (sensor designation)
- Output signal jumps briefly (approx. 10 seconds) to the set fault current

Then the corresponding current is outputted to the cable (the value corresponds to the actual level as well as the settings already carried out, e.g. factory setting).

Address setting HART-Multidrop

In HART-Multidrop mode (several sensors on one input) the address must be set before continuing with the parameter adjustment. You will find a detailed description in the operating instructions manual "*Indicating and adjustment module*" or in the online help of PACTware or DTM.

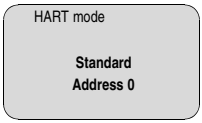

Parameter adjustment

As VEGAFLEX 61 is a distance measuring instrument, the distance from the sensor to the product surface is measured. To have the real product level displayed, an allocation of the measured distance to the percentage height must be made. To carry out this adjustment, the distance is entered with full and empty vessel. If these values are not known, an adjustment with the distance values, e.g. 10 % and 90 % is also possible. Starting point for these distance specifications is always the seal surface of the thread or flange. With these settings, the real level is calculated. Furthermore the operating range of the sensor is limited from maximum to the required range.

The real product level during this adjustment is not important, because the min./max. adjustment is always carried out without changing the product level. These settings can be made ahead of time without the instrument having to be installed.

In the main menu item "*Basic adjustment*", the individual submenu items should be selected one after the other and provided with the correct parameter values.

Caution:
If there is a separation of different liquids in the vessel, e.g. by condensation, VEGAFLEX 61 will always detect the medium with the higher dielectric figure (ε_r).

Keep in mind that interfaces can cause faulty measurements.

If you want to measure the total height of both liquids reliably, please contact our service department or use an instrument specially designed for interface measurement.

Start your parameter adjustment with the following menu items of the basic adjustment:

Carry out min. adjustment

Proceed as follows:

1 Move from the measured value display to the main menu by pushing ***[OK]***.

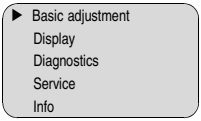

2 Select the menu item "*Basic adjustment*" with ***[->]*** and confirm with ***[OK]***. Now the menu item "*Min. adjustment*" is displayed.

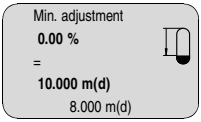

3 Prepare the % value for editing with ***[OK]*** and set the cursor to the requested position with ***[->]***. Set the requested percentage value with ***[+]*** and save with ***[OK]***. The cursor jumps now to the distance value.

4 Enter the suitable distance value in m for the empty vessel (e.g. distance from the sensor to the vessel bottom) corresponding to the percentage value.

5 Save the settings with ***[OK]*** and move to "Max. adjustment" with ***[->]***.

Carry out max. adjustment

Proceed as follows:

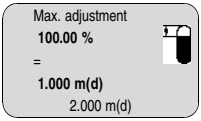

1 Prepare the % value for editing with ***[OK]*** and set the cursor to the requested position with ***[->]***. Set the requested percentage value with ***[+]*** and save with ***[OK]***. The cursor jumps now to the distance value.

2 Enter the appropriate distance value in m (corresponding to the percentage value) for the full vessel. Keep in mind that the max. level must lie below the dead band.

3 Save the settings with ***[OK]***.

Application

Each product has different reflective properties. In addition, there are various interfering factors which have to be taken into account: agitated product surfaces and foam generation (with liquids); dust generation, material cones and echoes from the vessel wall (with solids). To adapt the sensor to these different conditions, you should first select in this menu item under "*Medium*" either "*Liquid*" or "*Solid*".

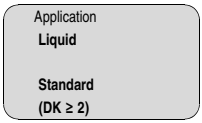

Depending on the dielectric figure (dielectri value or ε_r), measured products can have a different reflective property. Therefore an additional selection possibility is available.

Under "*Sensitivity*" you can select "*Standard (DK ≥ 2)*" or "*Increased sensitivity (DK < 2)*".

Through this the sensor is optimally adapted to the product and measurement reliability, particularly in products with bad reflective properties, is considerably increased.

Enter the requested parameters via the appropriate keys, save your settings and jump to the next menu item with the ***[->]*** key.

Damping

To suppress fluctuations in the measured value display, e. g. caused by an agitated product surface, a damping can be set. This time can be between 0 and 999 seconds. Keep in mind that the reaction time of the entire measurement will then be longer and the sensor will react to measured value changes with a delay. In general, a period of a few seconds is sufficient to smooth the measured value display.

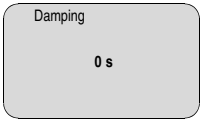

Enter the requested parameters via the appropriate keys, save your settings and jump to the next menu item with the ***[->]*** key.

Linearisation curve

A linearization is necessary for all vessels in which the vessel volume does not increase linearly with the level - e.g. in a horizontal cylindrical or spherical tank - and the indication or output of the volume is required. Corresponding linearization curves are preprogrammed for

these vessels. They represent the correlation between the level percentage and vessel volume. By activating the appropriate curve, the volume percentage of the vessel is displayed correctly. If the volume should not be displayed in percent but e.g. in l or kg, a scaling can be also set in the menu item "*Display*".

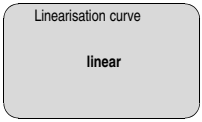

Enter the requested parameters via the appropriate keys, save your settings and jump to the next menu item with the ***[->]*** key.

Caution:
Note the following, if VEGAFLEX 61 is used as part of an overfill protection system according to WHG:

If a linearisation curve is selected, the measuring signal is no longer compulsorily linear proportional to the level. This must be taken into consideration by the user, particularly when adjusting the switching point on the level switch.

Sensor-TAG

In this menu item you can enter an unambiguous designation for the sensor, e.g. the measurement loop name or the tank or product designation. In digital systems and in the documentation of larger plants, a singular designation should be entered for exact identification of individual measuring points.

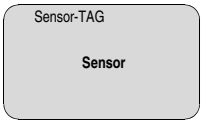

With this menu item, the Basic adjustment is finished and you can now jump to the main menu with the ***[ESC]*** key.

Gating out of false signals

High sockets or vessel installations, such as e. g. struts or agitators as well as buildup and weld joints on the vessel walls, cause interfering reflections that can impair the measurement. A false echo storage detects and marks these false echoes, so that they are no longer taken into account for the level measurement. A false echo memory should be created with low level so that all potential interfering reflections can be detected.

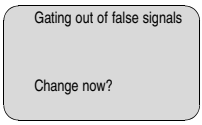

Proceed as follows:

1 Move from the measured value display to the main menu by pushing ***[OK]***.

2 Select the menu item "*Service*" with ***[->]*** and confirm with ***[OK]***. Now the menu item "*False signal suppression*" is displayed.

3 Confirm "*False signal suppression - Change now*" with ***[OK]*** and select in the below menu "*Create new*". Enter the actual distance from the sensor to the product surface. All false signals in this area are detected by the sensor and saved after confirming with ***[OK]***.

Note:
Check the distance to the product surface, because if an incorrect (too large) value is entered, the existing level will be saved as false signal. The filling level would then no longer be detectable in this area.

Copy sensor data

This function enables reading out parameter adjustment data as well as writing parameter adjustment data into the sensor via the indicating and adjustment module. A description of the function is available in the operating instructions manual "*Indicating and adjustment module*".

The following data are read out or written with this function:

- Measured value presentation
- Adjustment
- Medium
- Vessel form
- Damping
- Linearisation curve
- Sensor-TAG
- Displayed value
- Display unit
- Scaling
- Current output
- Unit of measurement
- Language
- Sensitivity

The following safety-relevant data are **not** read out or written:

- HART mode
- PIN
- SIL
- Sensor length/Sensor type
- Gating out of false signals

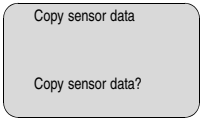

Reset

Basic adjustment

If the function "*Reset*" is carried out, the sensor resets the values of the following menu items to the reset values (see chart):[1)]

The following values will be reset:

Function	Reset value
Max. adjustment	Distance, upper dead zone
Min. adjustment - Rod/Coax version	Distance, supplied sensor length
Min. adjustment - Cable version	Distance, lower dead zone
Damping ti	0 s
Linearisation	linear
Sensor-TAG	Sensor
Display	Distance
Current output - characteristics	4 … 20 mA
Current output - max. current	20 mA
Current output - min. current	4 mA
Current output - failure	< 3.6 mA
Application - rod/coax version	Liquid
Application - Cable version	Bulk solid

The values of the following menu items are *not* reset to the reset values (see chart) with "**Reset**":

Menu item	Reset value
Lighting	no reset
Language	no reset
SIL	no reset
HART mode	no reset

Factory setting

Like basic adjustment, in addition, special parameters are reset to default values.[2)]

Pointer

The min. and max. values are reset to the actual value.

Optional settings

Additional adjustment and diagnosis options such as e.g. scaling, simulation or trend curve presentation are shown in the following menu schematic. You will find a detailed description of these menu items in the operating instructions manual "*Indicating and adjustment module*".

1) Sensor-specific basic adjustment.
2) Special parameters are parameters which are set customer-specifically on the service level with the adjustment software PACTware.

6.5 Menu schematic

Basic adjustment

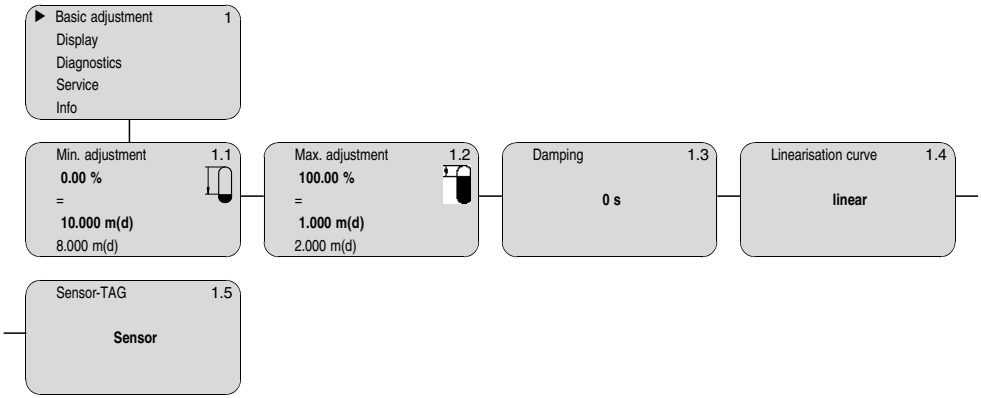

Display

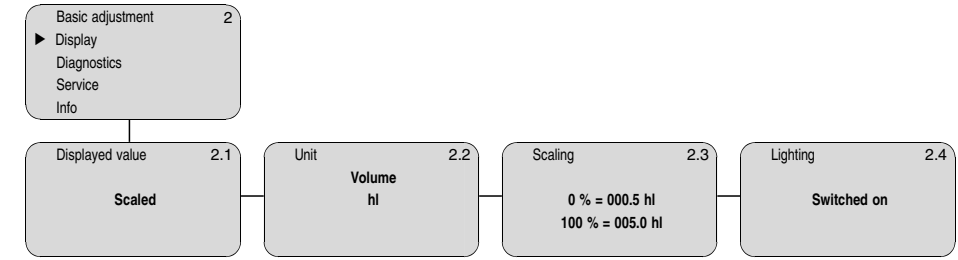

Diagnostics

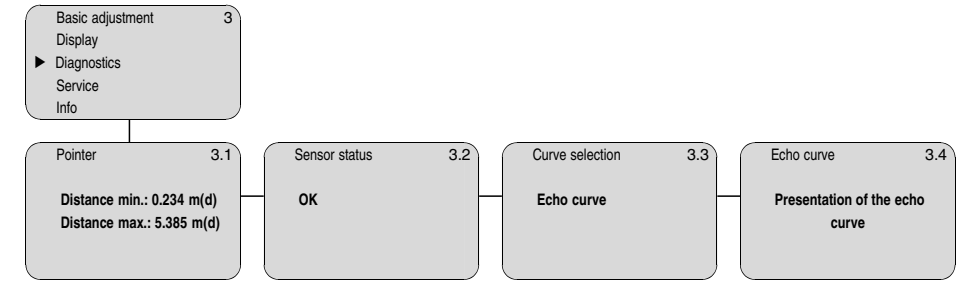

Service

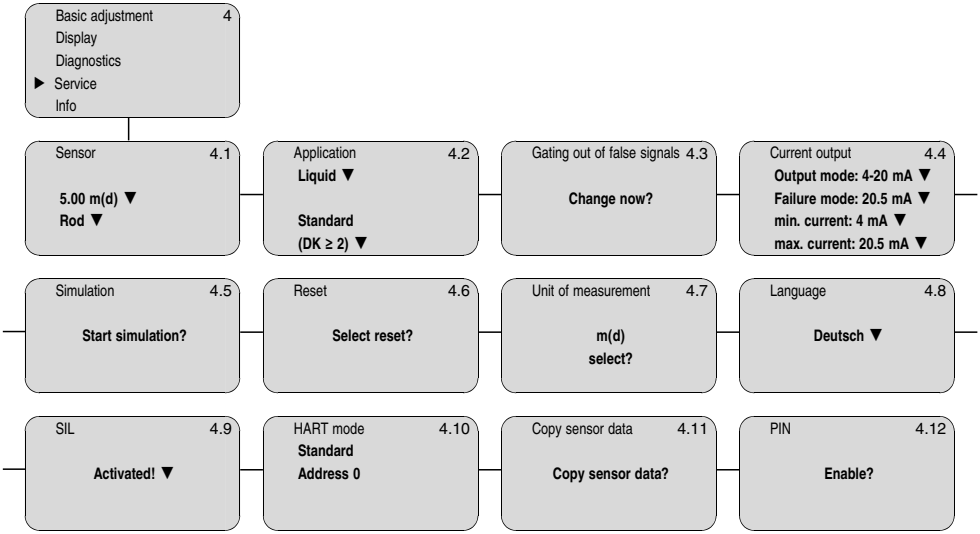

Info

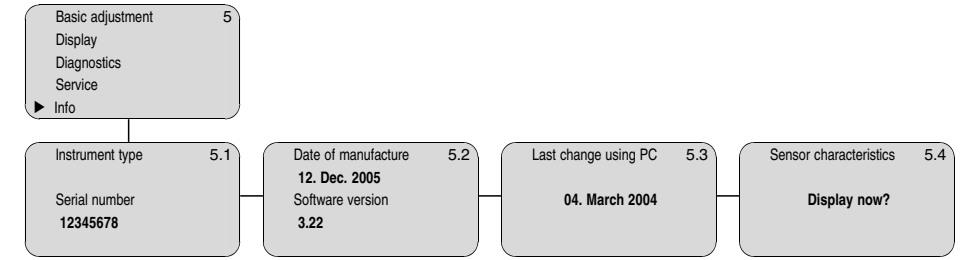

31833-EN-100426

6.6 Saving the parameter adjustment data

It is recommended noting the adjusted data, e.g. in this operating instructions manual and archive them afterwards. They are hence available for multiple use or service purposes.

If VEGAFLEX 61 is equipped with an indicating and adjustment module, the most important data can be read out of the sensor into indicating and adjustment module. The procedure is described in the operating instructions manual "*Indicating and adjustment module*" in the menu item "*Copy sensor data*". The data remain there permanently even if the sensor power supply fails.

If it is necessary to exchange the sensor, the indicating and adjustment module is inserted into the replacement instrument and the data are written into the sensor under the menu item "*Copy sensor data*".

7 Set up with PACTware and other adjustment programs

7.1 Connecting the PC

VEGACONNECT directly on the sensor

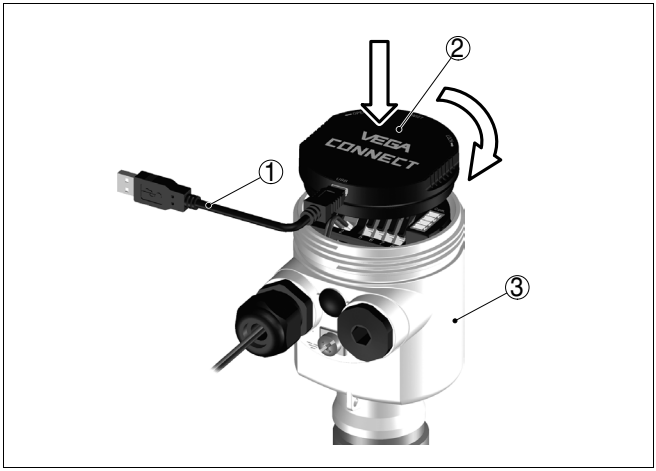

Fig. 22: Connection of the PC via VEGACONNECT directly to the sensor

1 USB cable to the PC
2 VEGACONNECT
3 Sensor

VEGACONNECT externally

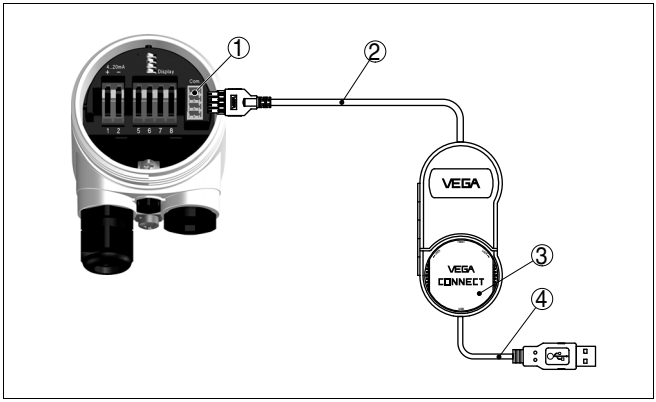

Fig. 23: Connection via VEGACONNECT externally

1 I^2C bus (com.) interface on the sensor
2 I^2C connection cable of VEGACONNECT
3 VEGACONNECT
4 USB cable to the PC

Necessary components:

- VEGAFLEX 61
- PC with PACTware and suitable VEGA DTM
- VEGACONNECT
- Power supply unit or processing system

VEGACONNECT via HART

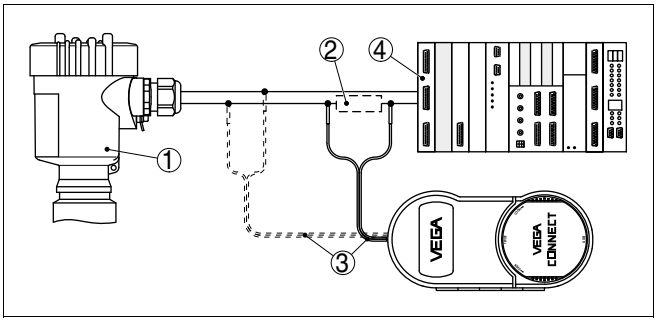

Fig. 24: Connecting the PC via HART to the signal cable

1 VEGAFLEX 61
2 HART resistance 250 Ω (optional depending on processing)
3 Connection cable with 2 mm pins and terminals
4 Processing system/PLC/Voltage supply

Necessary components:

- VEGAFLEX 61
- PC with PACTware and suitable VEGA DTM
- VEGACONNECT
- HART resistance approx. 250 Ω
- Power supply unit or processing system

Note:
With power supply units with integrated HART resistance (internal resistance approx. 250 Ω), an additional external resistance is not necessary. This applies, e. g. to the VEGA instruments VEGATRENN 149A, VEGADIS 371, VEGAMET 381. Common Ex separators are also usually equipped with a sufficient current limitation resistance. In such cases, VEGACONNECT 4 can be connected parallel to the 4 … 20 mA cable.

7.2 Parameter adjustment with PACTware

Further setup steps are described in the operating instructions manual "*DTM Collection/PACTware*" attached to each CD and which can also be downloaded from our homepage. A detailed description is available in the online help of PACTware and the VEGA DTMs.

Note:
Keep in mind that for setup of VEGAFLEX 61, DTM-Collection in the actual version must be used.

All currently available VEGA DTMs are included as a DTM Collection on a CD. They can be purchased for a token fee from the responsible VEGA agency. In addition, the actual PACTware version is also available on this CD.

In addition, this DTM Collection incl. the basic version of PACTware can be downloaded free of charge from the Internet. Move via www.vega.com and "*Downloads*" to "*Software*".

7.3 Parameter adjustment with AMS™ and PDM

For VEGA sensors, instrument descriptions for the adjustment programs AMS™ and PDM are available as DD or EDD. The instrument descriptions are already implemented in the current versions of AMS™ and PDM.

For older versions of AMS™ and PDM, a free-of-charge download is available via Internet. Move via www.vega.com and "*Downloads*" to "*Software*".

7.4 Saving the parameter adjustment data

It is recommended to document or save the parameter adjustment data. That way they are available for multiple use or service purposes.

The VEGA DTM Collection and PACTware in the licensed, professional version provide suitable tools for systematic project documentation and storage.

8 Maintenance and fault rectification

8.1 Maintenance

When used as directed in normal operation, VEGAFLEX 61 is completely maintenance free.

8.2 Rectify malfunctions

Reaction when malfunctions occur

The operator of the system is responsible for taking suitable measures to remove interferences.

Causes of malfunction

VEGAFLEX 61 offers maximum reliability. Nevertheless, faults can occur during operation. These may be caused by the following, e.g.:

- Sensor
- Process
- Voltage supply
- Signal processing

Fault rectification

The first measures to be taken are to check the output signals as well as to evaluate the error messages via the indicating and adjustment module. The procedure is described below. Further comprehensive diagnostics can be carried out on a PC with the software PACTware and the suitable DTM. In many cases, the causes can be determined this way and faults rectified.

24 hour service hotline

However, should these measures not be successful, call the VEGA service hotline in urgent cases under the phone no. **+49 1805 858550**.

The hotline is available to you 7 days a week round-the-clock. Since we offer this service world-wide, the support is only available in the English language. The service is free of charge, only the standard telephone costs will be charged.

Checking the 4 … 20 mA signal

Connect a handmultimeter in the suitable measuring range according to the wiring plan. The following table describes possible errors in the current signal and helps to remove them:

Error	Cause	Removal
4 … 20 mA signal not stable	Level fluctuations	Set damping via the indicating and adjustment module
4 … 20 mA signal missing	Electrical connection faulty	Check connection according to chapter "*Connection steps*" and if necessary, correct according to chapter "*Wiring plan*"

Error	Cause	Removal
	Voltage supply missing	Check cables for breaks; repair if necessary
	Operating voltage too low or load resistance too high	Check, adapt if necessary
Current signal greater than 22 mA or less than 3.6 mA	Oscillator in the sensor defective	Exchange the instrument or send it in for repair

In Ex applications, the regulations for the wiring of intrinsically safe circuits must be observed.

Error messages via the indicating and adjustment module

The indicating and adjustment modules indicates faults via error codes and text messages. The following table describes the error codes with status according to NE 107 and gives information on the causes of failure and their removal:

Status according to NE 107	Error code	Text message	Cause/Rectification
Failure	E013	no measured value available	Sensor in boot phase
		no measured value available	Sensor does not find an echo, e.g. due to faulty installation or wrong parameter adjustment
		no measured value available	Wrong sensor length entered
	E017	Adjustment span too small	Adjustment not within the specification. Carry out the adjustment again, increasing the distance between min. and max. adjustment
	E036	No operable software	Failed or interrupted software update/Repeat software update
	E042	Hardware error, electronics defective	Exchange the instrument or send it in for repair
	E043	Hardware error, electronics defective	Exchange the instrument or send it in for repair

Reaction after fault rectification

Depending on the failure reason and measures taken, the steps described in chapter "*Set up*" must be carried out again, if necessary.

8.3 Exchange or shorten cable/rod

Exchanging the cable/ rod

The cable or rod (meas. part) of the probe can be shortened, if necessary. To loosen the meas. part you need two fork spanners with spanner width 8.

1 Loosen the measuring component by applying a fork spanner to the flat surfaces (SW 8), provide counterforce with another fork spanner (SW 8)

2 Unscrew the loosened measuring component manually

3 Place the enclosed new double washer onto the thread.

Caution:
Make sure that the two components of the double washer remain together.

4 Screw in a new measuring part manually

5 Exert counterforce with the second fork spanner and tighten the measuring component on the flat surfaces with a torque of 7 Nm (5.16 lbf ft).

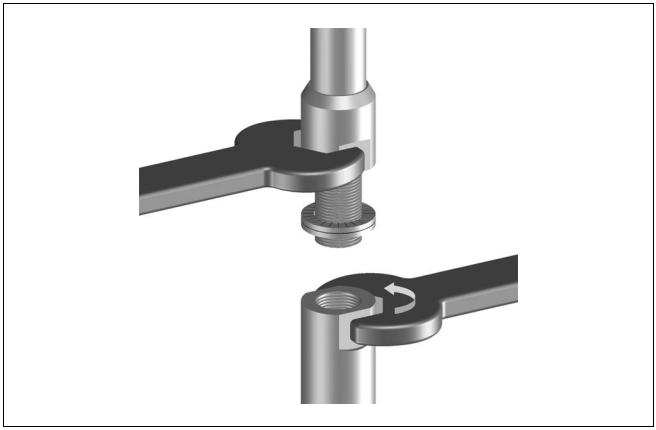

Fig. 25: Exchanging the cable or rod

Information:
Please keep the stated torque so that the max. tensile strength remains.

Shorten cable/rod

The cable and rod of the probe can be shortened by any amount.

1 Cable: loosen the three pins on the gravity weight (hexagon 3)

2 Cable: remove the pins

3 Cable: Pull the cable out of the gravity weight
4 Shorten the cable/rod with a cut-off wheel or metal saw at the lower end. Make sure the length is correct.
5 Cable: cable protrudes approx. 40 mm (1.575 in) into the gravity weight.
6 Cable: Fasten the cable with three pins, torque 7 Nm (5.16 lbf ft)
7 Enter new probe length and then carry out a fresh adjustment (see "*Setup procedure, Carrying out min. adjustment - Carrying out max. adjustment*").

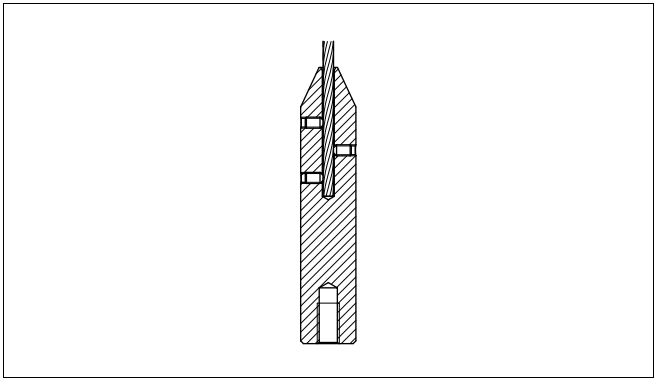

Fig. 26: Shortening the cable probe

8.4 Exchanging the electronics module

If the electronics module is defective, it can be replaced by the user.

In Ex applications only one instrument and one electronics module with respective Ex approval may be used.

If there is no electronics module available on site, one can be ordered from the VEGA agency serving you.

Sensor serial number

The new electronics module must be loaded with the settings of the sensor. These are the options:

- At the factory by VEGA
- Or on site by the user

In both cases, the sensor serial number is necessary. The serial numbers are stated on the type label of the instrument, inside the housing or on the delivery note.

Information:
When loading on site, first of all the order data must be downloaded from the Internet (see operating instructions manual "*Oscillator*").

Assignment

The electronics modules are adapted to the respective sensor and distinguish also in the signal output or power supply.

4 … 20 mA/HART

Electronics module FX-E.60H suitable for VEGAFLEX 61, 62, 63, 65, 66 - 4 … 20mA/HART:

- FX-E.60H**X** (X = without approvals)
- FX-E.60H**A** (A = approvals CA, DA according to product list)
- FX-E.60H**C** (C = approvals XM, CX, CM, CK, CI, DX, DM, DI, GX, UX, UF according to product list)

8.5 Software update

The software version of VEGAFLEX 61 can be determined as follows:

- on the type label of the electronics
- via the indicating and adjustment module
- via PACTware

You can view all software histories on our website www.vega.com. Make use of this advantage and get registered for update information via e-mail.

The following components are required to update the sensor software:

- Sensor
- Voltage supply
- VEGACONNECT
- PC with PACTware
- Current sensor software as file

Load sensor software to PC

At "www.vega.com/downloads" go to "*Software*". Select under "*plics instruments and sensors*" the suitable instrument series. Load the zip file via the right mouse key with "*Save target as*" e.g. on the desktop of your PC. Extract all files available in the zip file, e.g. to the desktop.

Prepare update

Connect the sensor to power supply and provide connection from PC to the instrument via VEGACONNECT. Start PACTware and provide connection to the sensor, e.g. via the VEGA project assistant. Close the parameter window of the sensor, as far as open.

Load software into sensor

Go in the PACTware menu bar to "*Instrument data*", "*Additional functions*" and "*Update instrument software*".

PACTware now checks the actual hardware and software version of the sensor and displays the data. This procedure lasts approx. 60 s.

Push the button "***Update software***" and select the previously extracted hex file. Then the software update can be started. The additional files are installed automatically. Depending on the sensor, this procedure can last approximately 1 h.

8.6 Instrument repair

If a repair is necessary, please proceed as follows:

You can download a return form (23 KB) from our Internet homepage www.vega.com under: "*Downloads - Forms and certificates - Repair form*".

By doing this you help us carry out the repair quickly and without having to call back for needed information.

- Print and fill out one form per instrument
- Clean the instrument and pack it damage-proof
- Attach the completed form and, if need be, also a safety data sheet outside on the packaging
- Please ask the agency serving you for the address of your return shipment. You can find the respective agency on our website www.vega.com under: "*Company - VEGA worldwide*"

Return of rod versions

On instruments with exchangeable rod, the rod must be unscrewed for transport to avoid damages.

Return the parts separately for repair.

To loosen to rod, you require a fork spanner with wrench size 8.

1 Loosen the rod with a fork spanner applied to the flat surfaces (SW 8), provide counterforce with another fork spanner (SW 8)

2 Twist off the loosened rod manually

See also chapter "*Maintenance and fault rectification*"/"*Exchange cable/rod*"

9 Dismounting

9.1 Dismounting steps

Warning:
Before dismounting, be aware of dangerous process conditions such as e.g. pressure in the vessel, high temperatures, corrosive or toxic products etc.

Take note of chapters "*Mounting*" and "*Connecting to power supply*" and carry out the listed steps in reverse order.

9.2 Disposal

The instrument consists of materials which can be recycled by specialised recycling companies. We use recyclable materials and have designed the electronics to be easily separable.

WEEE directive 2002/96/EG
This instrument is not subject to the WEEE directive 2002/96/EG and the respective national laws. Pass the instrument directly on to a specialised recycling company and do not use the municipal collecting points. These may be used only for privately used products according to the WEEE directive.

Correct disposal avoids negative effects to persons and environment and ensures recycling of useful raw materials.

Materials: see chapter "*Technical data*"

If you have no way to dispose of the old instrument properly, please contact us concerning return and disposal.

10 Supplement

10.1 Technical data

General data

Material 316L corresponds to 1.4404 or 1.4435

Materials, wetted parts	
– Process fitting	316L and PCTFE, Hastelloy C22 (2.4602) and PCTFE
– Process seal on the instrument side (cable/rod leadthrough)	FKM (Viton), FFKM (Kalrez 6375), EPDM, silicone FEP coated
– Process seal	On site (instruments with thread: Klingersil C-4400 is attached)
– inner conductor (up to the separation cable/rod)	318 S13 (1.4462)
– Rod: ø 6 mm (0.236 in)	316L or Hastelloy C22 (2.4602)
– Cable: ø 2 mm (0.079 in)	316 (1.4401)
– Cable: ø 4 mm (0.157 in)	316 (1.4401)
– Gravity weight (optionally available)	316L
Materials, non-wetted parts	
– Plastic housing	plastic PBT (Polyester)
– Aluminium die-casting housing	Aluminium die-casting AlSi10Mg, powder-coated - basis: Polyester
– Stainless steel housing - precision casting	316L
– Stainless steel housing, electropolished	316L
– Seal between housing and housing cover	NBR (stainless steel housing, investment casting), silicone (Aluminium/plastic housing, stainless steel housing, electro-polished)
– Inspection window in housing cover (optional)	Polycarbonate
– Ground terminal	316L
Process fittings	
– Pipe thread, cylindrical (DIN 3852-A)	G¾ A, G1 A, G1½ A
– American pipe thread, conical (ASME B1.20.1)	¾ NPT, 1 NPT, 1½ NPT
– Flanges	DIN from DN 25, ANSI from 1"
Weight	
– Instrument weight (depending on process fitting)	approx. 0.8 … 8 kg (0.176 … 17.64 lbs)
– Rod: ø 6 mm (0.236 in)	approx. 220 g/m (2.365 oz/ft)
– Cable: ø 2 mm (0.079 in)	approx. 20 g/m (0.215 oz/ft)
– Cable: ø 4 mm (0.157 in)	approx. 80 g/m (0.86 oz/ft)

– Gravity weight	325 g (11.46 oz)
Probe length L (from seal surface)	
– Rod: ø 6 mm (0.236 in)	up to 4 m (13.12 ft)
– Trimming accuracy - rod	< 1 mm (0.039 in)
– Cable: ø 2 mm (0.079 in)	up to 32 m (105 ft)
– Cable: ø 4 mm (0.157 in)	up to 32 m (105 ft)
– Trimming accuracy - cable	±0.05 %
Lateral load with rod: ø 6 mm (0.236 in)	4 Nm (2.95 lbf ft)
Max. tensile load with cable: ø 2 mm (0.079 in)	1.5 KN (337 lbf)
Max. tensile load with cable: ø 4 mm (0.157 in)	5 KN (1124 lbf)
Thread in gravity weight (cable version)	M 12

Input variable

Measured variable	Level of liquids and solids
Min. dielectric figure of the medium	$\varepsilon_r > 1.6$

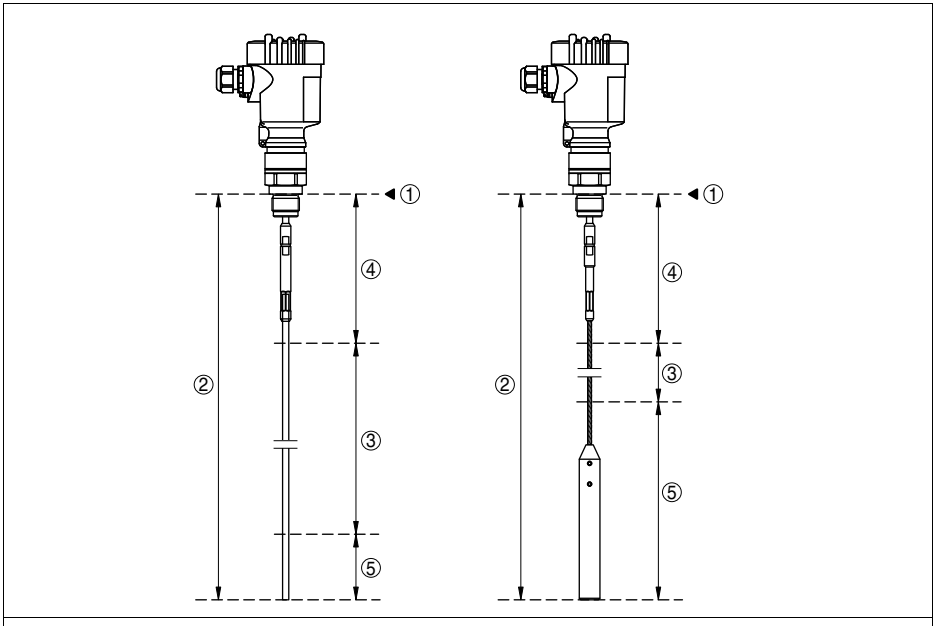

Fig. 27: Measuring ranges of VEGAFLEX 61

1 Reference plane
2 Probe length L
3 Measuring range (default setting refers to the measuring range in water)
4 Upper dead band (see diagrams under Accuracy - grey section)
5 Lower dead band (see diagrams under Accuracy - grey section)

Output variable	
Output signal	4 … 20 mA/HART
Cycle time	min. 1 s (dependent on the parameter setting)
Signal resolution	1.6 µA
Failure signal current output (adjustable)	mA-value unchanged 20.5 mA, 22 mA, < 3.6 mA (adjustable)
Max. output current	22 mA
Load	see load diagram under Power supply
Damping (63 % of the input variable)	0 … 999 s, adjustable
Fulfilled NAMUR recommendations	NE 43
HART output values	
– 1. HART value (Primary Value)	Distance to the level
– 2. HART value (Secondary Value)	Distance to the level - scaled (for example hl, %)
Resolution, digital	> 1 mm (0.039 in)

31833-EN-100426

Accuracy (similar to DIN EN 60770-1)

Process reference conditions according to DIN EN 61298-1	
– Temperature	+18 … +30 °C (+64 … +86 °F)
– Relative humidity	45 … 75 %
– Air pressure	+860 … +1060 mbar/+86 … +106 kPa (+12.5 … +15.4 psig)
Installation reference conditions	
– Min. distance to installations	> 500 mm (19.69 in)
– Vessel	metallic, ø 1 m (3.281 ft), centric installation, process fitting flush with the vessel ceiling
– Medium	Water/Oil (Dk value ~2.0)
– Installation	Probe end does not touch the vessel bottom
Sensor parameter adjustment	Gating out of false signals carried out In bulk solids applications, implementing a false signal suppression is generally not recommended. The accuracy of bulk solid applications depends considerably on the application. Hard and fast accuracy specifications are thus not available.
Deviation	see diagrams Depending on the installation conditions, there can be deviations which can be rectified with an adaptation of the adjustment or a change of the measured value offset in the DTM service mode.

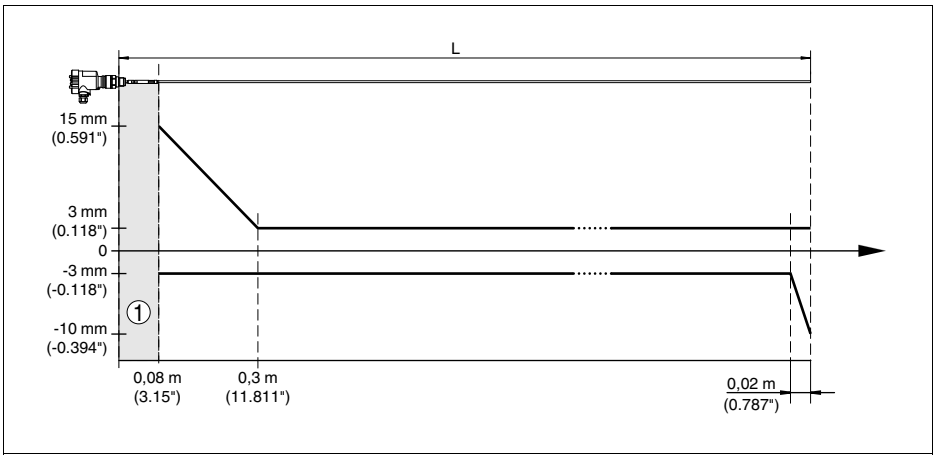

Fig. 28: Deviation VEGAFLEX 61 in rod version in water

1 Dead zone - no measurement possible in this area
L Probe length

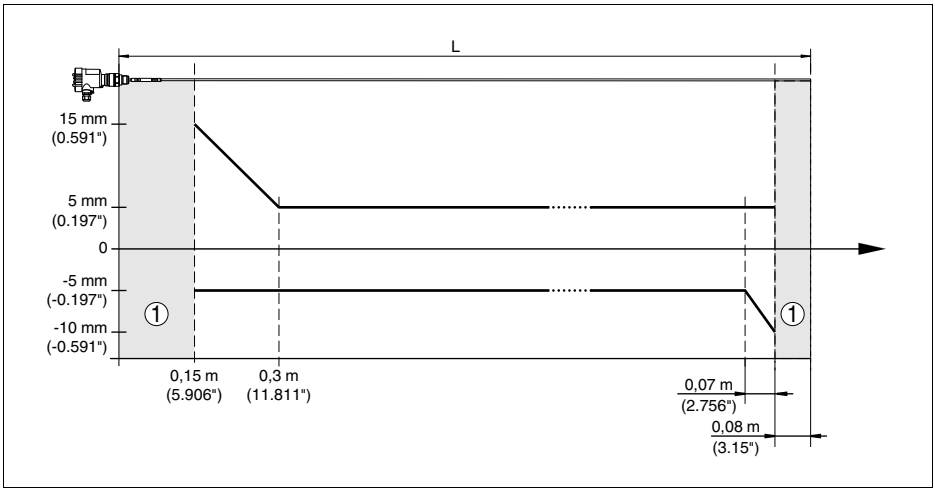

Fig. 29: Deviation VEGAFLEX 61 in rod version in oil

1 Dead zone - no measurement possible in this area
L Probe length

31833-EN-100426

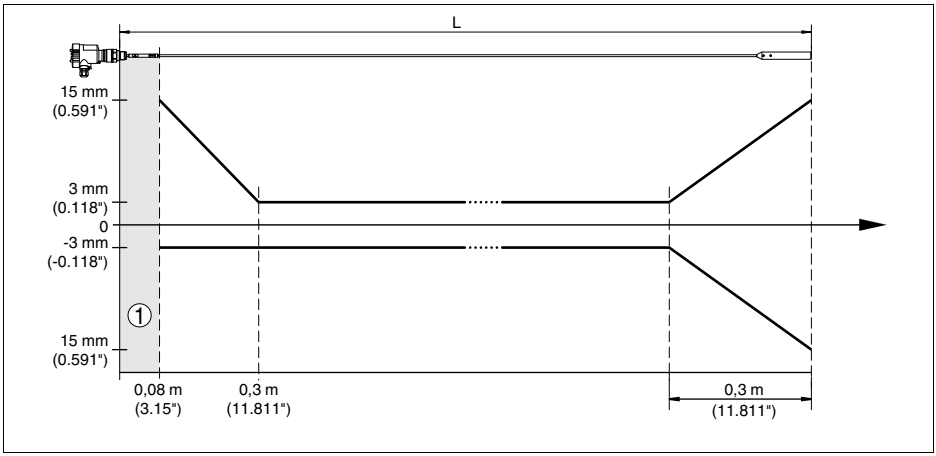

Fig. 30: Deviation VEGAFLEX 61 in cable version, probe length L < 20 m in water

1 Dead zone - no measurement possible in this area
L Probe length

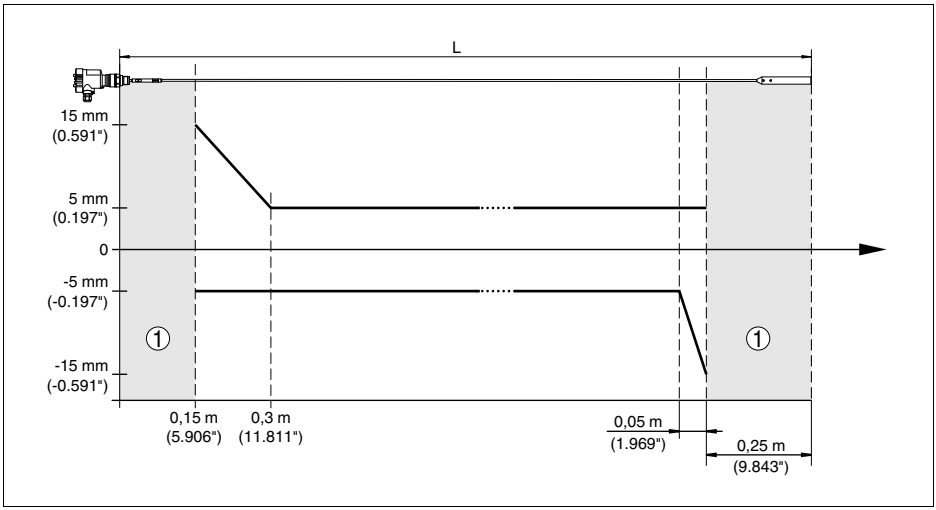

Fig. 31: Deviation VEGAFLEX 61 in cable version, probe length L < 20 m in oil

1 Dead zone - no measurement possible in this area
L Probe length

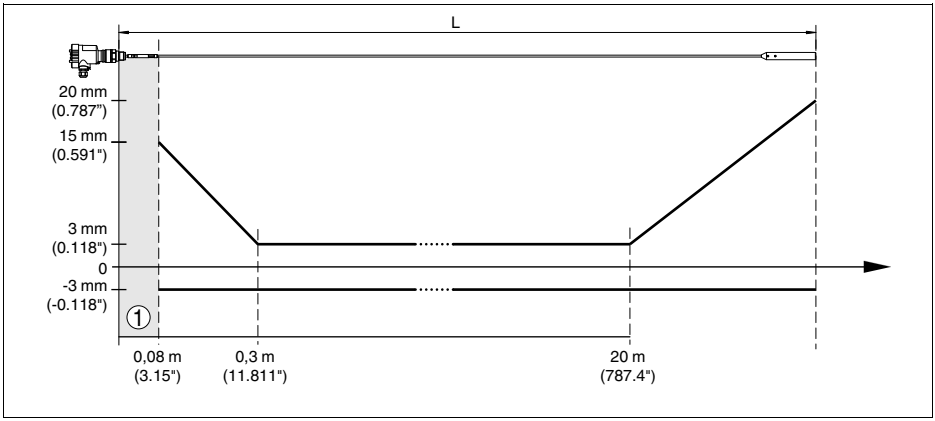

Fig. 32: Deviation VEGAFLEX 61 in cable version, probe length L > 20 m in water

1 Dead zone - no measurement possible in this area
L Probe length

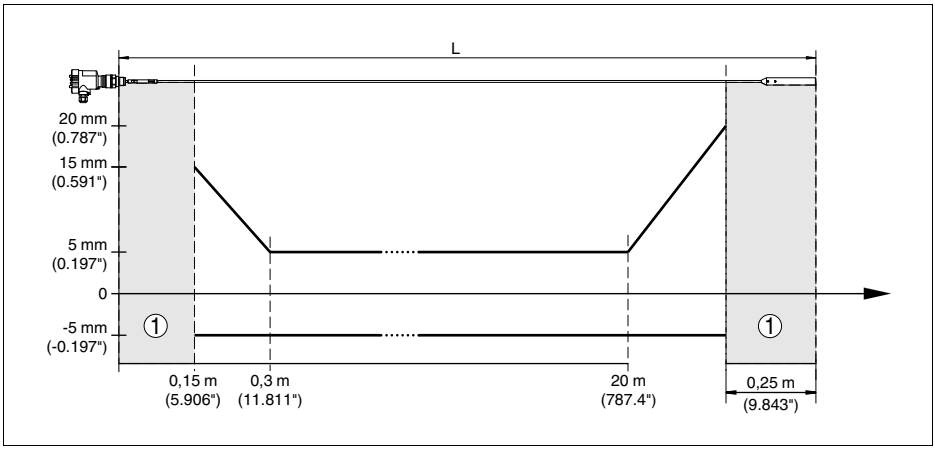

Fig. 33: Deviation VEGAFLEX 61 in cable version, probe length L > 20 m in oil

1 Dead zone - no measurement possible in this area
L Probe length

Influence of the ambient temperature to the sensor electronics

Temperature drift	0.03 %/10 K relating to the max. measuring range or max. 0.3 %
Temperature drift - Digital output	3 mm/10 K relating to the max. measuring range or max. 10 mm

Ambient conditions

Ambient, storage and transport temperature	-40 … +80 °C (-40 … +176 °F)

Process conditions

Process pressure	-1 … +40 bar/-100 … +4000 kPa (- -14.5 … +580 psig), depending on the process fitting
Process temperature (thread or flange temperature)	
– FKM (Viton)	-40 … +150 °C (-40 … +302 °F)
– EPDM	-40 … +150 °C (-40 … +302 °F)
– FFKM (Kalrez 6375)	-20 … +150 °C (-4 … +302 °F)
	The measurement error from the process conditions is in the specified pressure and temperature range of below 1 %.

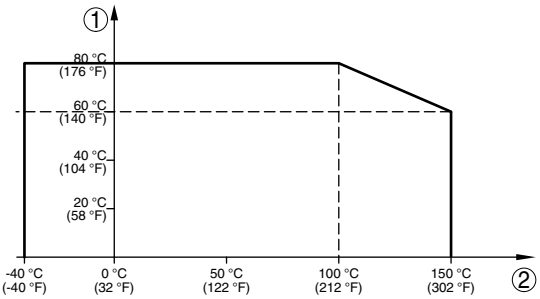

Fig. 34: Ambient temperature - Process temperature

1 Ambient temperature
2 Process temperature (depending on the seal material)

Electromechanical data - version IP 66/IP 67 and IP 66/IP 68; 0.2 bar

Cable entry/plug[3)]

– Single chamber housing

- 1 x cable gland M20 x 1.5 (cable: ø 5 … 9 mm), 1 x blind stopper M20 x 1.5

or:

- 1 x closing cap M20 x 1.5; 1 x blind stopper M20 x 1.5

or:

- 1 x closing cap ½ NPT, 1 x blind plug ½ NPT

or:

- 1 x plug (depending on the version), 1 x blind stopper M20 x 1.5

3) Depending on the version M12 x 1, according to DIN 43650, Harting, 7/8" FF.

– Double chamber housing	● 1 x cable entry M20 x 1.5 (cable: ø 5 … 9 mm), 1 x blind stopper M20 x 1.5; 1 x blind stopper M16 x 1.5 or optionally available with 1 x plug M12 x 1 for VEGADIS 61 or: ● 1 x closing cap ½ NPT, 1 x blind stopper ½ NPT, 1 x blind stopper M16 x 1.5 or optionally 1 x plug M12 x 1 for VEGADIS 61 or: ● 1 x plug (depending on the version), 1 x blind stopper M20 x 1.5; 1 x blind stopper M16 x 1.5 or optionally available with 1 x plug M12 x 1 for VEGADIS 61
Spring-loaded terminals for wire cross-section	> 2.5 mm² (AWG 14)

Electromechanical data - version IP 66/IP 68 (1 bar)

Cable entry	
– Single chamber housing	1 x IP 68 cable gland M20 x 1.5; 1 x blind stopper M20 x 1.5
– Double chamber housing	1 x IP 68 cable gland M20 x 1.5; 1 x blind stopper M20 x 1.5; 1 x blind stopper M16 x 1.5
Connection cable	
– Wire cross-section	0.5 mm² (AWG 20)
– Wire resistance	< 0.036 Ω/m
– Tensile strength	< 1200 N (270 lbf)
– Standard length	5 m (16.4 ft)
– Max. length	1000 m (3280 ft)
– Min. bending radius	25 mm (0.984 in) with 25 °C (77 °F)
– Diameter approx.	8 mm (0.315 in)
– Colour - standard PE	Black
– Colour - standard PUR	Blue
– Colour - Ex-version	Blue

Indicating and adjustment module

Voltage supply and data transmission	through the sensor
Indication	LC display in dot matrix
Adjustment elements	4 keys
Protection rating	
– unassembled	IP 20
– mounted into the sensor without cover	IP 40
Materials	
– Housing	ABS

– Inspection window	Polyester foil

Voltage supply

Operating voltage

– Non-Ex instrument	14 … 36 V DC
– EEx-ia instrument	14 … 30 V DC
– EEx-d-ia instrument	20 … 36 V DC

Operating voltage with lighted indicating and adjustment module

– Non-Ex instrument	20 … 36 V DC
– EEx-ia instrument	20 … 30 V DC
– EEx-d-ia instrument	20 … 36 V DC

Permissible residual ripple

– < 100 Hz	U_{ss} < 1 V
– 100 Hz … 10 kHz	U_{ss} < 10 mV

Load	see diagram

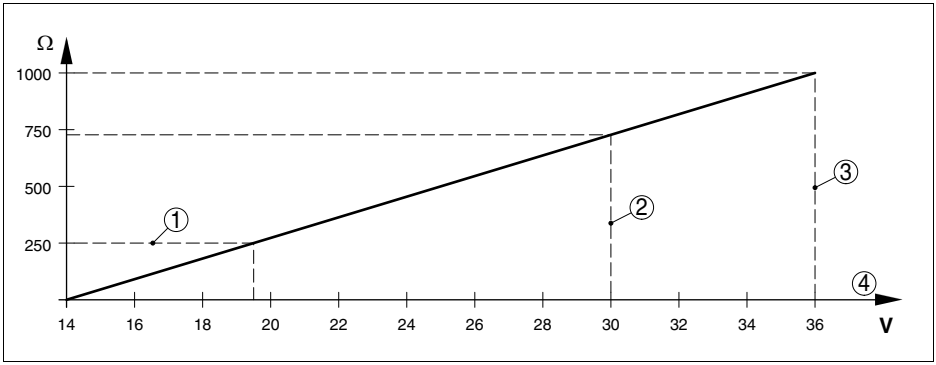

Fig. 35: Voltage diagram

1 HART load
2 Voltage limit EEx-ia instrument
3 Voltage limit non-Ex/Ex-d instrument
4 Operating voltage

Electrical protective measures

Protection, depending on housing version

– Plastic housing	IP 66/IP 67
– Aluminium housing, stainless steel housing - investment casting, stainless steel housing - electro-polished	IP 66/IP 68 (0.2 bar)[4]
– Aluminium and stainless housing, investment casting (optionally available)	IP 66/IP 68 (1 bar)

[4] A suitable cable is the prerequisite for maintaining the protection rating.

Overvoltage category	III
Protection class	II

Functional safety (SIL)

Functional safety is already activated on instruments with SIL qualification ex factory. On instruments without SIL qualification ex factory, the functional safety must be activated by the user via the indicating and adjustment module or via PACTware for applications according to SIL.

Functional safety according to IEC 61508-4

– Single channel architecture (1oo1D)	up to SIL2
– double channel diversitary redundant architecture (1oo2D)	up to SIL3

You can find detailed information in the supplied Safety Manual of the instrument series or under "www.vega.com", "*Downloads*", "*Approvals*".

Approvals

Depending on the version, instruments with approvals can have different technical data.

For these instruments, the corresponding approval documents have to be taken into account. These are part of the delivery or can be downloaded under www.vega.com via "*VEGA Tools*" and "*serial number search*" as well as via "*Downloads*" and "*Approvals*".

10.2 Dimensions

The following dimensional drawings represent only an extract of the possible versions. Detailed dimensional drawings can be downloaded on www.vega.com under "*Downloads*" and "*Drawings*".

Plastic housing

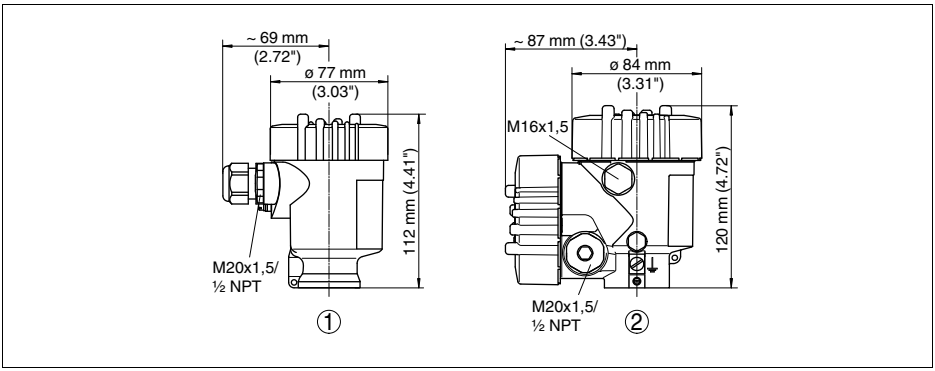

1 *Single chamber version*
2 *Double chamber version*

Aluminium housing

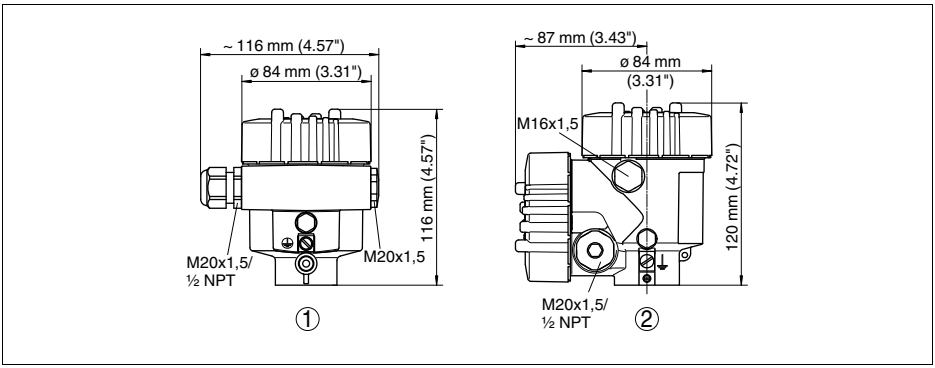

1 *Single chamber version*
2 *Double chamber version*

Aluminium housing in protection rating IP 66/IP 68, 1 bar

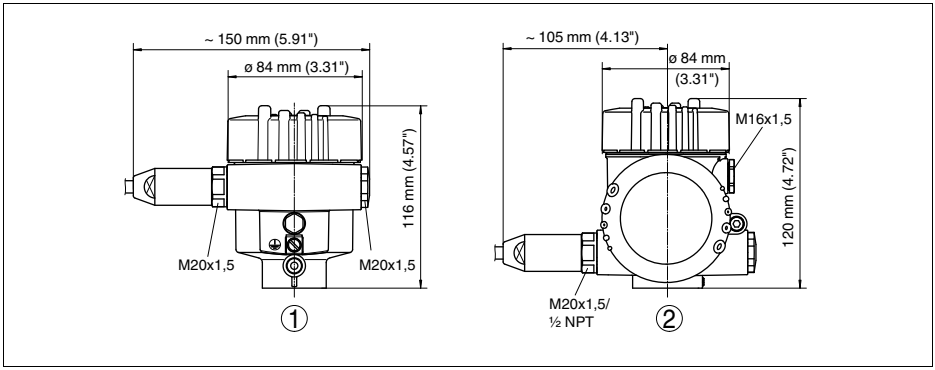

1 Single chamber version
2 Double chamber version

Stainless steel housing

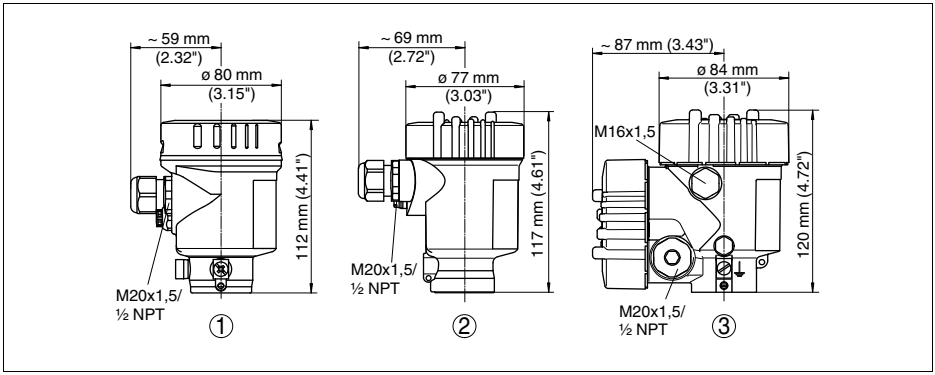

1 Single chamber version, electropolished
2 Single chamber version, precision casting
2 Double chamber version, precision casting

31833-EN-100426

VEGAFLEX 61 - threaded version

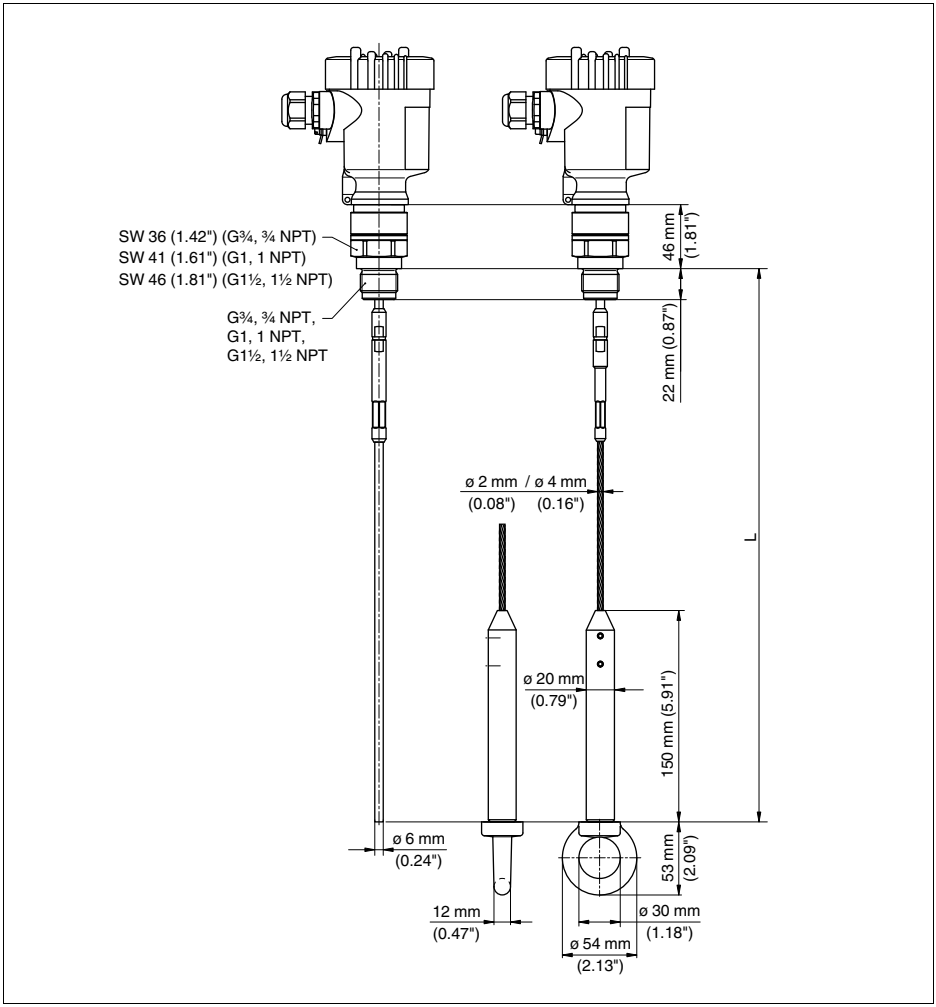

Fig. 40: VEGAFLEX 61 - threaded version

L Sensor length, see chapter "Technical data"
Lug optionally

31833-EN-100426

VEGAFLEX 61 - flange version

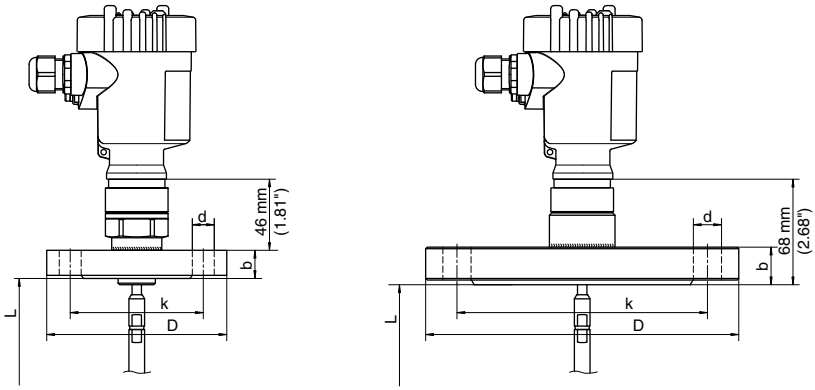

≤ DN 40 / 1½"

	D	b	k	d
DN 25 PN 40	115	18	85	4x ø 14
DN 40 PN 40	150	18	110	4x ø 18
1" 150 lb	108	14,2	78,2	4x ø 15,7
1" 300 lb	124	17,5	88,9	4x ø 19,1

	D	b	k	d
DN 25 PN 40	4.53"	0.71"	3.35"	4x ø 0.55"
DN 40 PN 40	5.91"	0.71"	4.33"	4x ø 0.71"
1" 150 lb	4.25"	0.56"	3.08"	4x ø 0.62"
1" 300 lb	4.88"	0.69"	3.50"	4x ø 0.75"

≥ DN 50 / 2"

	D	b	k	d
DN 50 PN 40	165	20	125	4x ø 18
DN 80 PN 40	200	24	160	8x ø 18
DN 100 PN 16	220	20	180	8x ø 18
2" 150 lb	152,4	19,1	120,7	4x ø 19,1
2" 300 lb	165,1	22,4	127	4x ø 19,1
3" 150 lb	190,5	23,9	152,4	4x ø 19,1
3" 300 lb	209,5	28,4	168,1	4x ø 22,4

	D	b	k	d
DN 50 PN 40	6.50"	0.79"	4.92"	4x ø 0.71"
DN 80 PN 40	7.87 "	0.95	6.30"	8x ø 0.71"
DN 100 PN 16	8.66"	0.79"	7.09"	8x ø 0.71"
2" 150 lb	6.00"	0.75"	4.75"	4x ø 0.75"
2" 300 lb	6.50"	0.88"	5.00"	4x ø 0.75"
3" 150 lb	7.50"	0.94"	6.00"	4x ø 0.75"
3" 300 lb	8.25"	1.12"	6.62"	4x ø 0.88"

Fig. 41: VEGAFLEX 61 - flange version

L Sensor length, see chapter "Technical data"

31833-EN-100426

10.3 Industrial property rights

VEGA product lines are global protected by industrial property rights.
Further information see http://www.vega.com.
Only in U.S.A.: Further information see patent label at the sensor housing.

VEGA Produktfamilien sind weltweit geschützt durch gewerbliche Schutzrechte.
Nähere Informationen unter http://www.vega.com.

Les lignes de produits VEGA sont globalement protégées par des droits de propriété intellectuelle.
Pour plus d'informations, on pourra se référer au site http://www.vega.com.

VEGA lineas de productos están protegidas por los derechos en el campo de la propiedad industrial.
Para mayor información revise la pagina web http://www.vega.com.

Линии продукции фирмы ВЕГА защищаются по всему миру правами на интеллектуальную собственность.
Дальнейшую информацию смотрите на сайте http://www.vega.com.

VEGA系列产品在全球享有知识产权保护。
进一步信息请参见网站<http://www.vega.com>。

10.4 Trademark

All brand names as well as trade and company names used are property of their lawful proprietor/originator.

Printing date:

VEGA Grieshaber KG
Am Hohenstein 113
77761 Schiltach
Germany
Phone +49 7836 50-0
Fax +49 7836 50-201
E-mail: info@de.vega.com
www.vega.com

All statements concerning scope of delivery, application, practical use and operating conditions of the sensors and processing systems correspond to the information available at the time of printing.

© VEGA Grieshaber KG, Schiltach/Germany 2010

Section 6 - Control Panel

- Control Panel Schematics
- Pfannenberg Filter Fan Installation & Operating Instructions
- Pfannenberg Model FLZ 530 Thermostat Installation & Operating Instructions
- Cutler-Hammer Series KD Circuit Breaker Installation Instructions
- Ferraz Shawmut Surge Trap Installation & Maintenance Instructions
- SymCom Motor Saver Model 460 Installation Instructions
- Sola HD Series SDU Uninterruptible Power Systems Instruction Manual
- ABB 24VDC Power Supply Operating & Installation Instructions
- Allen-Bradley Overload Relay Application & Installation Bulletin
- Johnson Controls A19 Series Thermostat Installation & Adjustment Instructions
- Allen-Bradley Model 855 PS B10LE422, Strobe Light Indicator Specifications
- C-More Model EA Operator Interface Terminal Hardware User Manual
- Allen-Bradley (Rockwell) Compact GuardLogix Controller User Manual
- Sierra Wireless Raven X Wireless Modem Quick Start Guide
- Sierra Wireless Raven X Wireless Modem User Guide

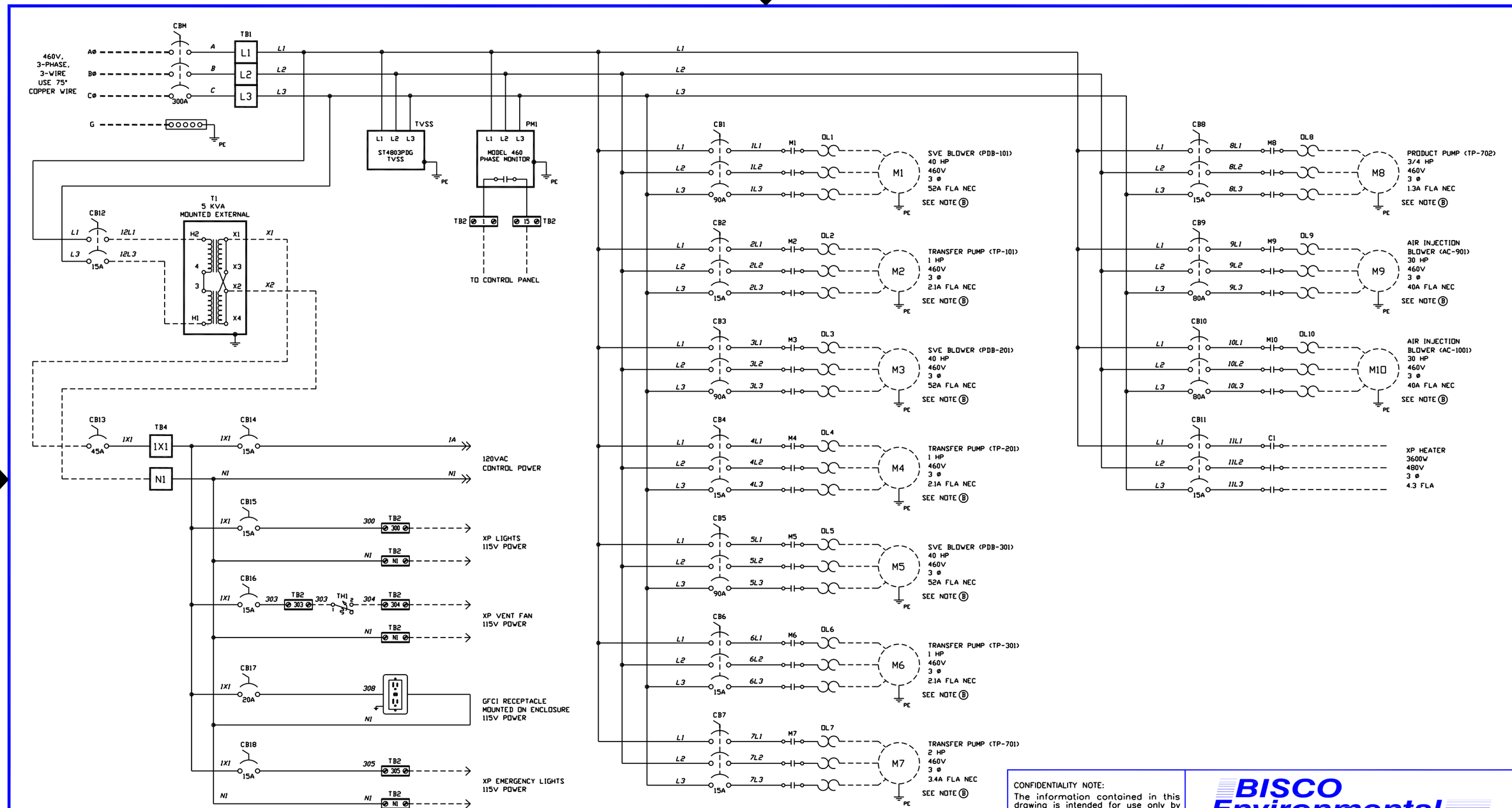

NOTE (A): REMOVE JUMPER AND CONNECT MOTOR THERMISTER IF PRESENT.

NOTE (B): BASED ON NFPA 70: NEC 2011 SET OVERLOAD RELAYS ACCORDING TO ACTUAL FLA AT INSTALLATION.

NOTE (C): UL LISTED 508A & 698A, TYPE 3R, INDUSTRIAL CONTROL PANELS.

NOTE (D): ———— WIRING BY BISCO WITHIN THIS PANEL.

NOTE (E): - - - - - - WIRING BY BISCO REMOTE TO THIS PANEL.

NOTE (F): ▬ ▬ ▬ ▬ ▬ REMOTE / FIELD WIRING BY OTHERS.

REV.	DESCRIPTION	DATE	APPR.
B	AS BUILT	11-28-11	LPC
A	CHANGED TO COMPACT GUARDLOGIX PLC	10-20-11	LPC

REVISIONS

CONFIDENTIALITY NOTE:
The information contained in this drawing is intended for use only by BISCO Environmental and the organization listed below. The information is confidential and any copying, distribution or dissemination without the consent of BISCO Environmental is STRICTLY PROHIBITED.

BISCO Environmental
Soil & Groundwater Remediation Equipment
Taunton, Massachusetts 02780

DRAWN BY LPC	DATE 9-7-11	TITLE CONTROL PANEL	
CHK BY	DATE	XDD, LLC. W.G. KRUMMRICH - SAUGET, IL	JOB NO. 12936
APPR BY	DATE	SCALE N/A / SIZE B / DWG NO. 12936RAS	SHEET 1 OF 10 / REV B

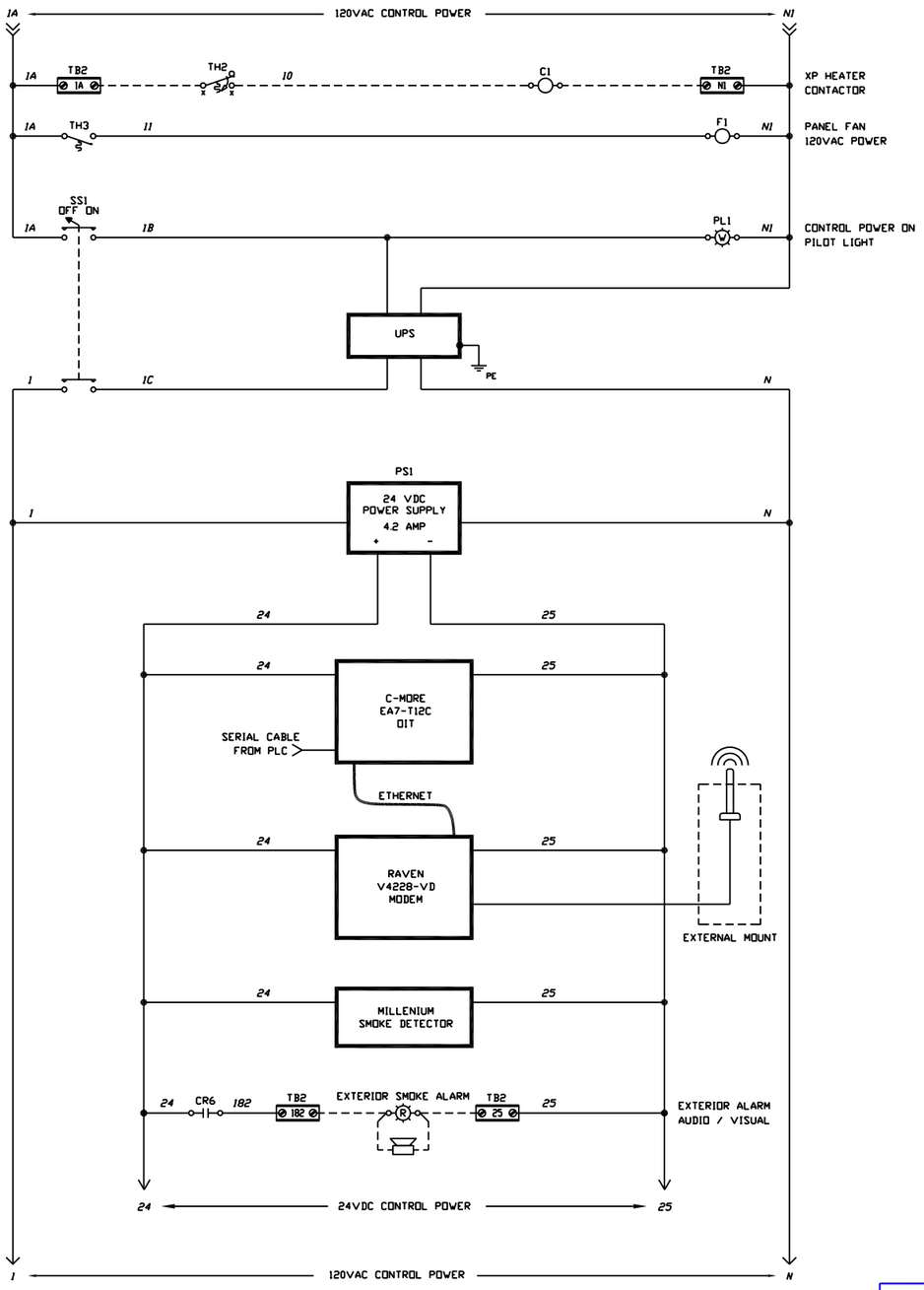

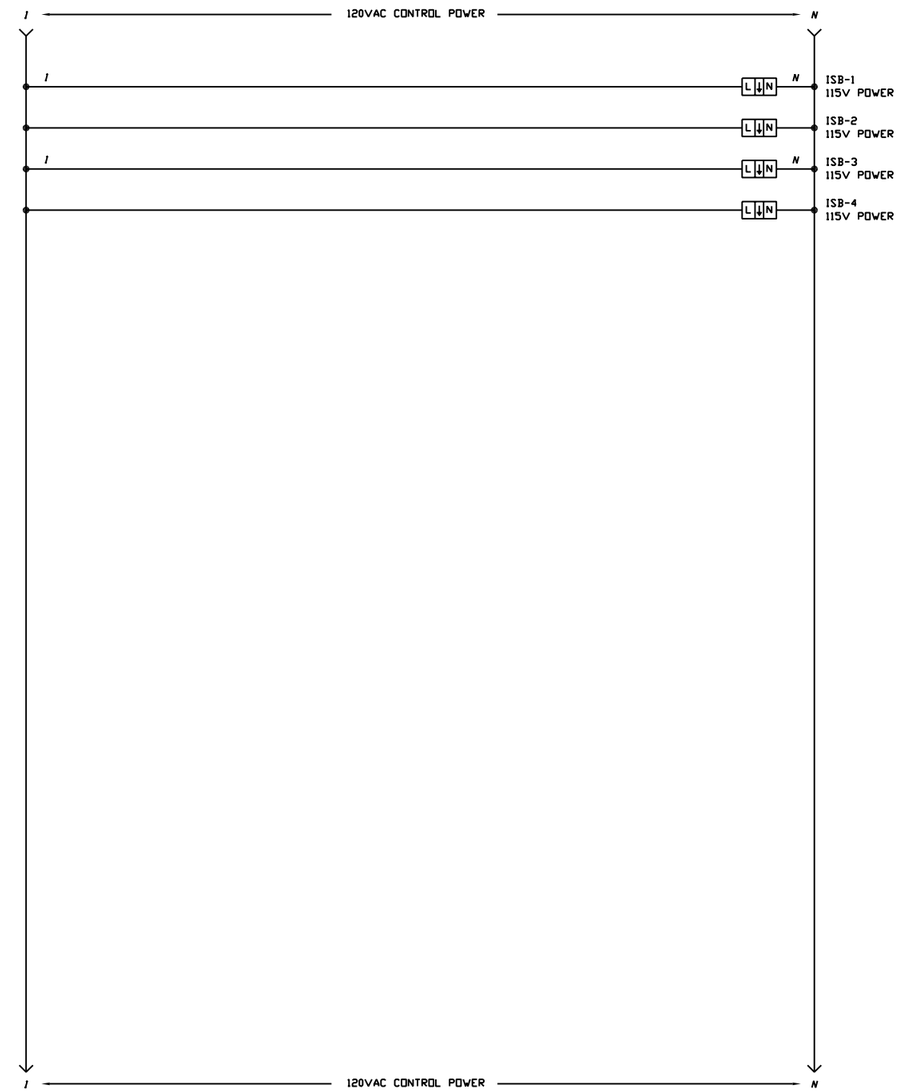

NOTE (A): REMOVE JUMPER AND CONNECT MOTOR THERMISTER IF PRESENT.

NOTE (B): BASED ON NFPA 70: NEC 2011 SET OVERLOAD RELAYS ACCORDING TO ACTUAL FLA AT INSTALLATION.

NOTE (C): UL LISTED 508A & 698A, TYPE 3R, INDUSTRIAL CONTROL PANELS.

NOTE (D): ———— WIRING BY BISCO WITHIN THIS PANEL.

NOTE (E): - - - - - - WIRING BY BISCO REMOTE TO THIS PANEL.

NOTE (F): ▬ ▬ ▬ ▬ ▬ ▬ REMOTE / FIELD WIRING BY OTHERS.

REV.	DESCRIPTION	DATE	APPR.
B	AS BUILT	11-28-11	LPC
A	CHANGED TO COMPACT GUARDLOGIX PLC	10-20-11	LPC

REVISIONS

CONFIDENTIALITY NOTE:
The information contained in this drawing is intended for use only by BISCO Environmental and the organization listed below. The information is confidential and any copying, distribution or dissemination without the consent of BISCO Environmental is STRICTLY PROHIBITED.

DRAWN BY LPC DATE 9-7-11

CHK BY DATE

APPR BY DATE

BISCO Environmental
Soil & Groundwater Remediation Equipment
Taunton, Massachusetts 02780

TITLE: CONTROL PANEL

XDD, LLC.
W.G. KRUMMRICH - SAUGET, IL

JOB NO. 12936

SCALE	SIZE	DWG NO.	SHEET	REV
N/A	B	12936RAS	2 OF 10	B

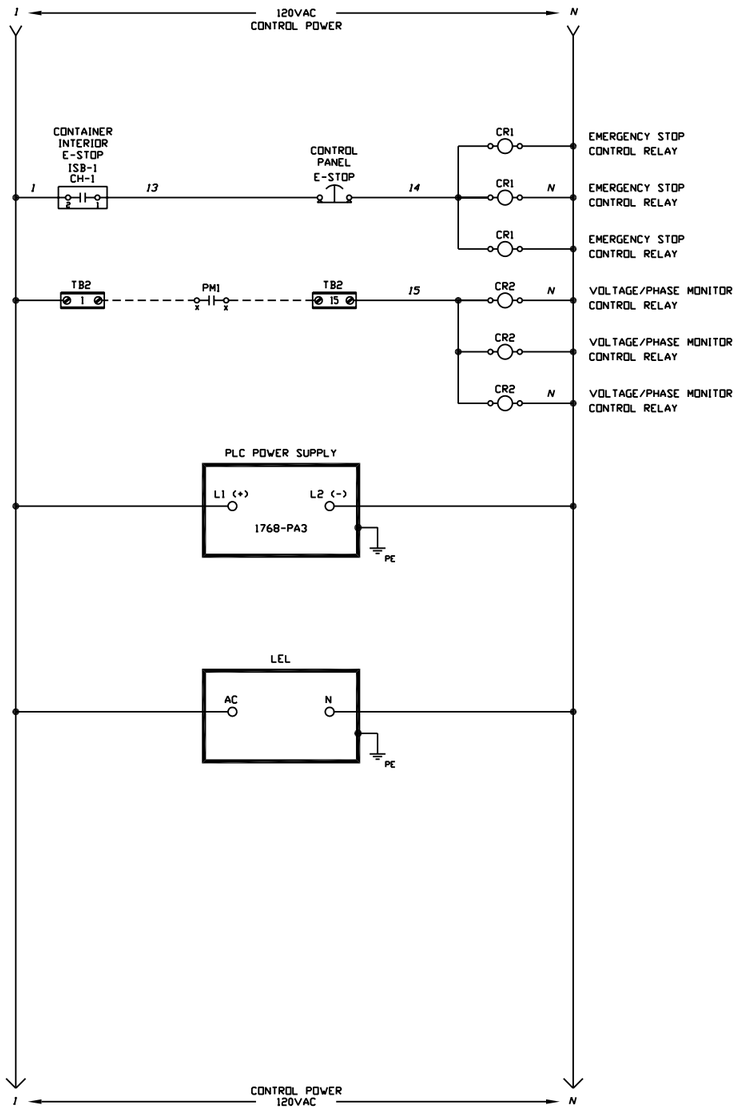

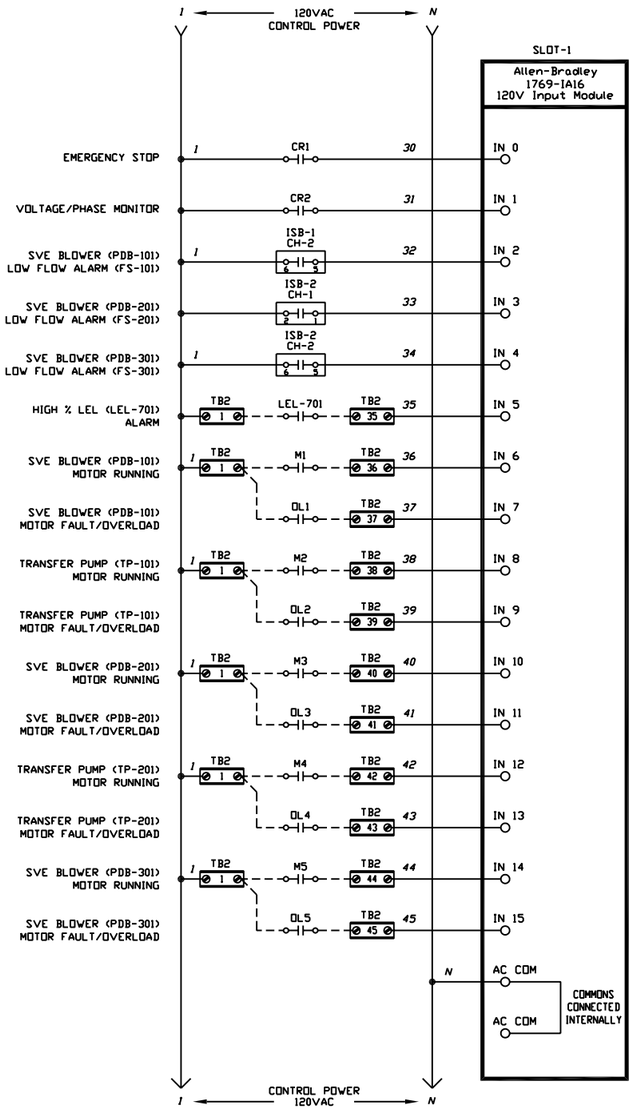

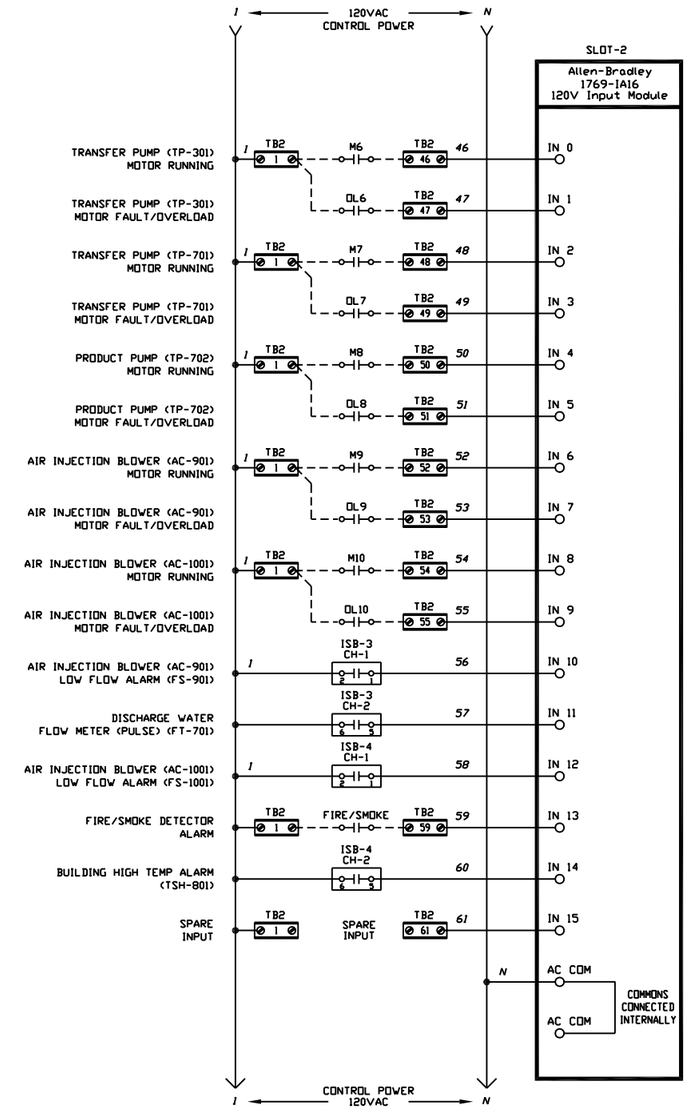

NOTE (A): REMOVE JUMPER AND CONNECT MOTOR THERMISTER IF PRESENT.

NOTE (B): BASED ON NFPA 70: NEC 2011 SET OVERLOAD RELAYS ACCORDING TO ACTUAL FLA AT INSTALLATION.

NOTE (C): UL LISTED 508A & 698A, TYPE 3R, INDUSTRIAL CONTROL PANELS.

NOTE (D): ———— WIRING BY BISCO WITHIN THIS PANEL.

NOTE (E): - - - - - - WIRING BY BISCO REMOTE TO THIS PANEL.

NOTE (F): ▬ ▬ ▬ ▬ ▬ ▬ REMOTE / FIELD WIRING BY OTHERS.

REV.	DESCRIPTION	DATE	APPR.
B	AS BUILT	11-28-11	LPC
A	CHANGED TO COMPACT GUARDLOGIX PLC	10-20-11	LPC

REVISIONS

CONFIDENTIALITY NOTE:
The information contained in this drawing is intended for use only by BISCO Environmental and the organization listed below. The information is confidential and any copying, distribution or dissemination without the consent of BISCO Environmental is STRICTLY PROHIBITED.

DRAWN BY LPC DATE 9-7-11

CHK BY DATE

APPR BY DATE

BISCO Environmental
Soil & Groundwater Remediation Equipment
Taunton, Massachusetts 02780

TITLE: CONTROL PANEL

XDD, LLC.
W.G. KRUMMRICH - SAUGET, IL

JOB NO. 12936

SCALE	SIZE	DWG NO.	SHEET	REV
N/A	B	12936RAS	3 OF 10	B

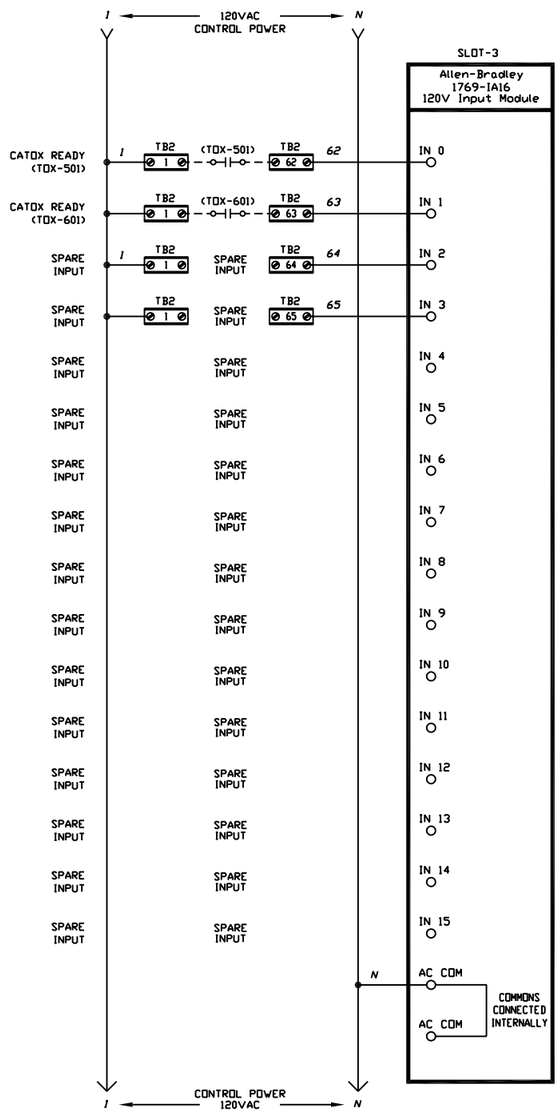

COMPONENT	QTY	TYPE	PART #	DESCRIPTION
Control Enclosure (MCP)	2	Hammond	EN4SD603616GY	NEMA 4 (3R), Single Door, 60"H x 36"W x 16"D
Control Enclosure (MCP)	2	Hammond	EP6036	60"H x 36"W Sub Panel
Control Enclosure (MCP)	2	Hammond	2WSP4836	48"H x 36"W Swing Panel, Inner Door
Control Enclosure (MCP)	2	Hammond	RH20000GY	Type 3R Rain Hoods
Filter Fan	1	Phannenberg	116 2215 4055	PF 22000 IP55 Filter Fan
Exhaust Filter	1	Phannenberg	117 2000 4055	PFA 20000 IP55 Exhaust Filter
Thermostat (TH3)	1	Phannenberg	17121000010	FLZ 530 32-140 F Thermostat
Circuit Breaker (CBM)	1	Cutler Hammer	KD3300	MCBK, 300A, 460V, 3 Pole
Circuit Breaker (CBM)	1	Cutler Hammer	HM3R16	Disconnect Handle Kit for CBM
Terminal Block (TB1)	1	Ferraz Shawmut	69083	380A Distribution Block, 3 Pole
Terminal Block (TB1)	3	Ferraz Shawmut	08590	Distribution Block Cover Plate per Pole
Terminal Block (TB4)	1	Ferraz Shawmut	67562	175A Distribution Block, 2 Pole
Terminal Block (TB4)	2	Ferraz Shawmut	08570	Distribution Block Cover Plate per Pole
Ground Bar	1	Sq D Co	PK23GTA	Ground Bar, 23 Points
Ground Bar	1	Sq D Co	PK15GTA	Ground Bar, 15 Points
Ground Bar	1	Sq D Co	LK100AN	Ground Bar, Line Lug
TVSS	1	Ferraz	ST480SPDG	480VAC TVSS 4 Wire Unit
Phase Monitor (PM1)	1	Symcom	Motorsaver 460	Phase/Voltage Monitor w/Auto Restart
Transformer (T1)	1	Hammond	C1F005LES	5kva 460V X 115V Transformer
Circuit Breaker (CB1,3,5)	3	ABB	T1N090TL	90A, 460V, 3 Pole
Circuit Breaker (CB9 & 10)	2	ABB	T1N080TL	80A, 460V, 3 Pole
Circuit Breaker (CB2,4,6,7,8,11)	6	ABB	S203UP-K15	15A, 460V, 3 Pole
Circuit Breaker (CB12)	1	ABB	S202UP-K15	15A, 460V, 2 Pole
Circuit Breaker (CB13)	1	Allen Bradley	1492-MCAA145	45A, 115V, 1 Pole
Circuit Breaker (CB14,15,16,18)	4	Allen Bradley	1492-MCAA115	15A, 115V, 1 Pole
Circuit Breaker (CB17)	1	Allen Bradley	1492-MCAA120	20A, 115V, 1 Pole
UPS	1	Sola Hevi-Duty	SDU500	UPS 500 VA
24VDC Power Supply (PS1)	1	ABB	1SVR427045R0400	24VDC, 4.2A Power Supply
Contactor (M1, M3, M5)	3	Allen Bradley	100-C60D10	Contactor for 40HP at 460V, 3-Phase
OL Block (M1, M3, M5)	3	Allen Bradley	193-EEGE	18A - 90A OL Block
Contactor (M9, M10)	2	Allen Bradley	100-C43D10	Contactor for 30HP at 460V, 3-Phase
OL Block (M9, M10)	2	Allen Bradley	193-EEFD	9A - 45A OL Block
Contactor (M2,4,6,7,M8)	5	Allen Bradley	100-C09D10	Contactor for 5HP at 460V, 3-Phase
OL Block (M2,4,6,7,M8)	5	Allen Bradley	193-ED1CB	1.0A - 5.0A OL Block
Heater Contactor (C1)	1	Square D	8910DPA23V02	3 Pole Contactor, 25/35A
Selector Switch (SS1)	1	Allen Bradley	800FM-SM22	Selector Switch 2-Position, Maintained
Switch Contact (SS1)	2	Allen Bradley	800F-X10	Normally Open Contact
Pilot Light (PL1)	1	Allen Bradley	800FP-P7	Pilot Light, LED, White
Pilot Light (PL1)	1	Allen Bradley	800F-PN5W	Pilot Light, LED, White
E-Stop Operator	1	Allen Bradley	800FM-MP44	E-Stop Operator, Push/Pull, Maintained
E-Stop Operator	1	Allen Bradley	800F-X01	Normally Closed Contact
Switch & PL Mounting Latch	3	Allen Bradley	800F-ALM	Contacts Mounting Latch
Panel Strobe Light	1	Allen Bradley	855-PS-B10LE422	120V, Strobe Light, 65mm, Red
Control Relay (CR1-6)	10	Idec	RU4S-A110	Control Relay, 120V, 4 Pole
Control Relay (CR1-6)	10	Idec	SY4S-05	Control Relay Socket
Thermostat (TH1-2)	2	Johnson Controls	4E047	60-100 Degree Thermostat
Operator Interface (OIT)	1	C-More	EA7-T12C	Operator Interface Terminal
Operator Interface Cable	1	C-More	SLC-232-CBL	Operator Interface Cable
Programmable Controller	1	Allen Bradley	1768-L43S	PLC CPU, Compact GuardLogix
Programmable Controller	1	Allen Bradley	1768-PA3	PLC Power Supply
Programmable Controller	3	Allen Bradley	1769-IA16	PLC Discrete Input Module
Programmable Controller	1	Allen Bradley	1769-IF16C	PLC Analog Input Module
Programmable Controller	1	Allen Bradley	1769-IF8	PLC Analog Input Module
Programmable Controller	1	Allen Bradley	1769-OW16	PLC Relay Output Module
Programmable Controller	1	Allen Bradley	1769-ECR	PLC End Cap - Right Side
Wireless Modem	1	GetWireless	V4228-VD	AirLink Raven XEVDO V4221
Wireless Modem	1	GetWireless	301104	Wilson 5 Db Gain Dual-Band Antenna
Wireless Modem	1	GetWireless	FME-14	Antenna FME to SMA Modem Adapter
Wireless Modem	1	GetWireless	NMO58U-NC	Maxrad 3/4" NMO Antenna Mount
IS Barrier Relay (ISB-1-4)	4	Allen Bradley	897H-G232	Dual Channel IS Barrier Relay
IS Barrier (ISB-5-21)	17	Allen Bradley	897H-S214	4-20ma IS Barrier

NOTE Ⓐ: REMOVE JUMPER AND CONNECT MOTOR THERMISTER IF PRESENT.

NOTE Ⓑ: BASED ON NFPA 70: NEC 2011 SET OVERLOAD RELAYS ACCORDING TO ACTUAL FLA AT INSTALLATION.

NOTE Ⓒ: UL LISTED 508A & 698A, TYPE 3R, INDUSTRIAL CONTROL PANELS.

NOTE Ⓓ: ———— WIRING BY BISCO WITHIN THIS PANEL.

NOTE Ⓔ: - - - - - - WIRING BY BISCO REMOTE TO THIS PANEL.

NOTE Ⓕ: ▬ ▬ ▬ ▬ ▬ ▬ REMOTE / FIELD WIRING BY OTHERS.

REV.	DESCRIPTION	DATE	APPR.
B	AS BUILT	11-28-11	LPC
A	CHANGED TO COMPACT GUARDLOGIX PLC	10-20-11	LPC

REVISIONS

CONFIDENTIALITY NOTE:
The information contained in this drawing is intended for use only by BISCO Environmental and the organization listed below. The information is confidential and any copying, distribution or dissemination without the consent of BISCO Environmental is STRICTLY PROHIBITED.

DRAWN BY LPC DATE 9-7-11

CHK BY DATE

APPR BY DATE

BISCO Environmental
Soil & Groundwater Remediation Equipment
Taunton, Massachusetts 02780

TITLE CONTROL PANEL

XDD, LLC.
W.G. KRUMMRICH - SAUGET, IL

JOB NO. 12936

SCALE	SIZE	DWG NO.	SHEET	REV
N/A	B	12936RAS	4 OF 10	B

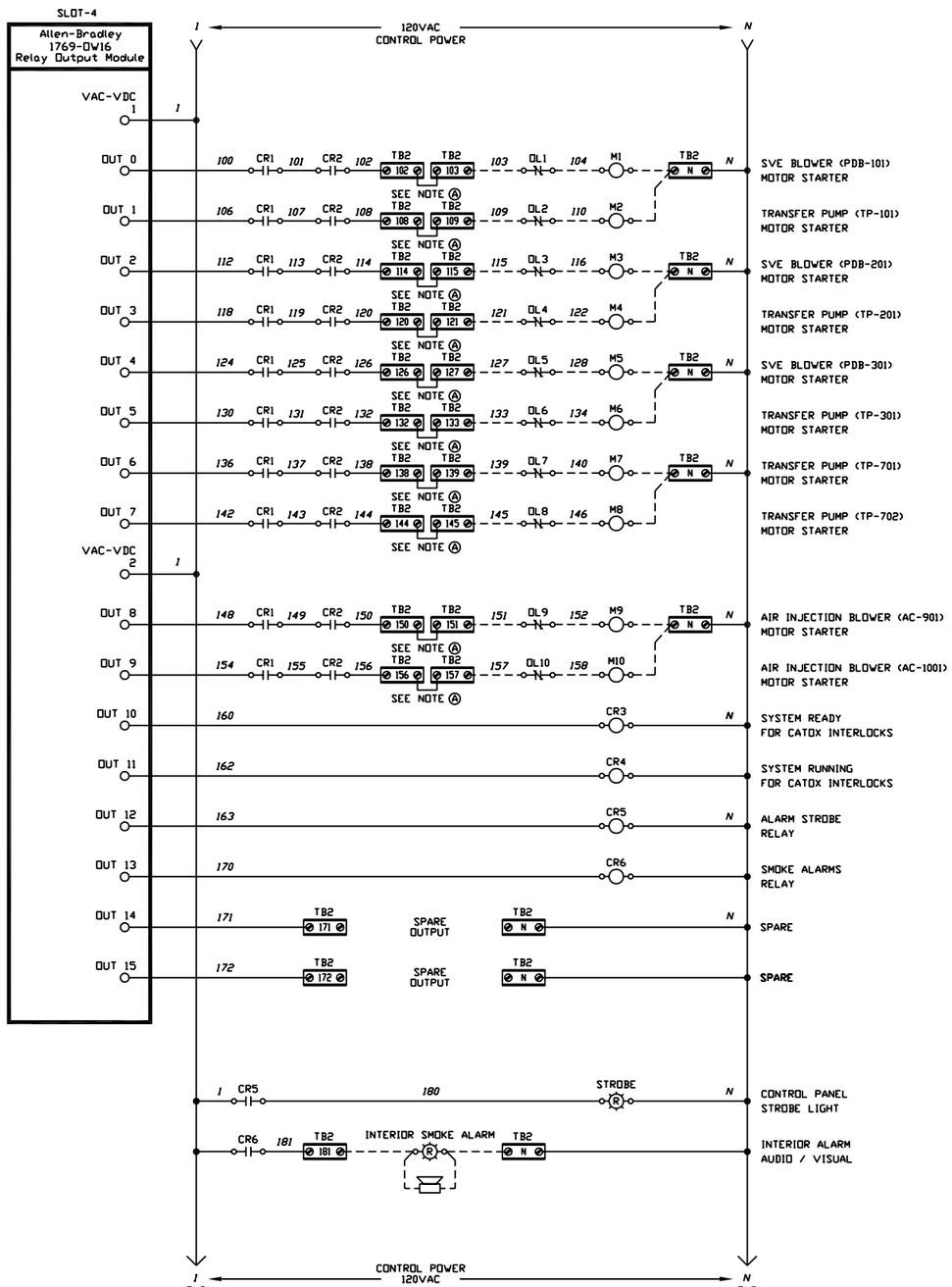

NOTE Ⓐ: REMOVE JUMPER AND CONNECT MOTOR THERMISTER IF PRESENT.

NOTE Ⓑ: BASED ON NFPA 70: NEC 2011 SET OVERLOAD RELAYS ACCORDING TO ACTUAL FLA AT INSTALLATION.

NOTE Ⓒ: UL LISTED 508A & 698A, TYPE 3R, INDUSTRIAL CONTROL PANELS.

NOTE Ⓓ: ———— WIRING BY BISCO WITHIN THIS PANEL.

NOTE Ⓔ: - - - - - - WIRING BY BISCO REMOTE TO THIS PANEL.

NOTE Ⓕ: ▬ ▬ ▬ ▬ ▬ REMOTE / FIELD WIRING BY OTHERS.

REV.	DESCRIPTION	DATE	APPR.
B	AS BUILT	11-28-11	LPC
A	CHANGED TO COMPACT GUARDLOGIX PLC	10-20-11	LPC

REVISIONS

CONFIDENTIALITY NOTE:
The information contained in this drawing is intended for use only by BISCO Environmental and the organization listed below. The information is confidential and any copying, distribution or dissemination without the consent of BISCO Environmental is STRICTLY PROHIBITED.

DRAWN BY LPC DATE 9-7-11

CHK BY DATE

APPR BY DATE

BISCO Environmental

Soil & Groundwater Remediation Equipment
Taunton, Massachusetts 02780

TITLE: CONTROL PANEL

XDD, LLC.
W.G. KRUMMRICH - SAUGET, IL

JOB NO. 12936

SCALE	SIZE	DWG NO.	SHEET	REV
N/A	B	12936RAS	5 OF 10	B

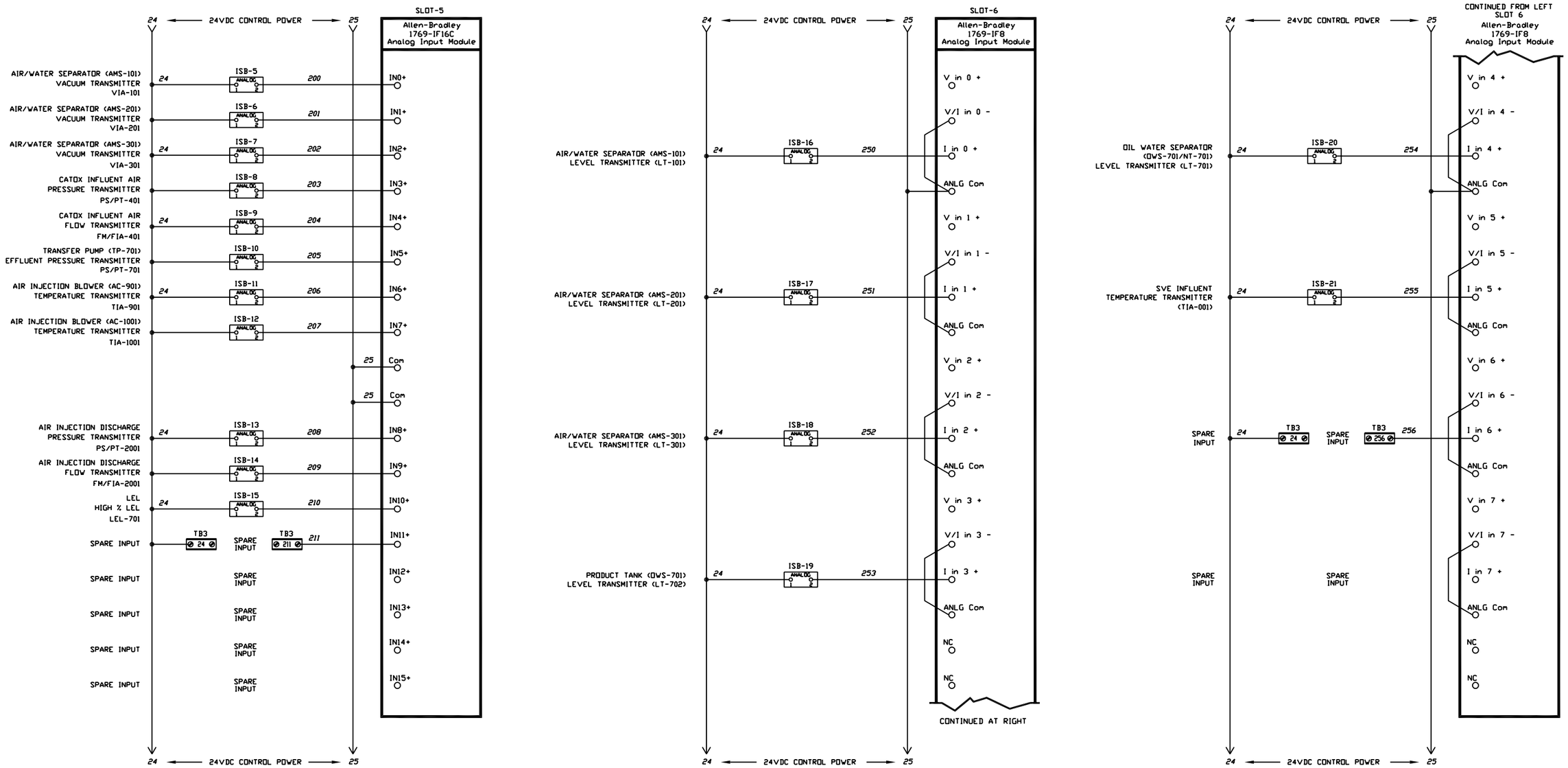

NOTE (A): REMOVE JUMPER AND CONNECT MOTOR THERMISTER IF PRESENT.

NOTE (B): BASED ON NFPA 70: NEC 2011 SET OVERLOAD RELAYS ACCORDING TO ACTUAL FLA AT INSTALLATION.

NOTE (C): UL LISTED 508A & 698A, TYPE 3R, INDUSTRIAL CONTROL PANELS.

NOTE (D): ———— WIRING BY BISCO WITHIN THIS PANEL.

NOTE (E): - - - - - - WIRING BY BISCO REMOTE TO THIS PANEL.

NOTE (F): — — — — — REMOTE / FIELD WIRING BY OTHERS.

REV.	DESCRIPTION	DATE	APPR.
B	AS BUILT	11-28-11	LPC
A	CHANGED TO COMPACT GUARDLOGIX PLC	10-20-11	LPC

REVISIONS

CONFIDENTIALITY NOTE:
The information contained in this drawing is intended for use only by BISCO Environmental and the organization listed below. The information is confidential and any copying, distribution or dissemination without the consent of BISCO Environmental is STRICTLY PROHIBITED.

DRAWN BY LPC DATE 9-7-11

CHK BY DATE

APPR BY DATE

BISCO Environmental

Soil & Groundwater Remediation Equipment
Taunton, Massachusetts 02780

TITLE: CONTROL PANEL

XDD, LLC.
W.G. KRUMMRICH - SAUGET, IL

JOB NO. 12936

SCALE	SIZE	DWG NO.	SHEET	REV
N/A	B	12936RAS	6 OF 10	B

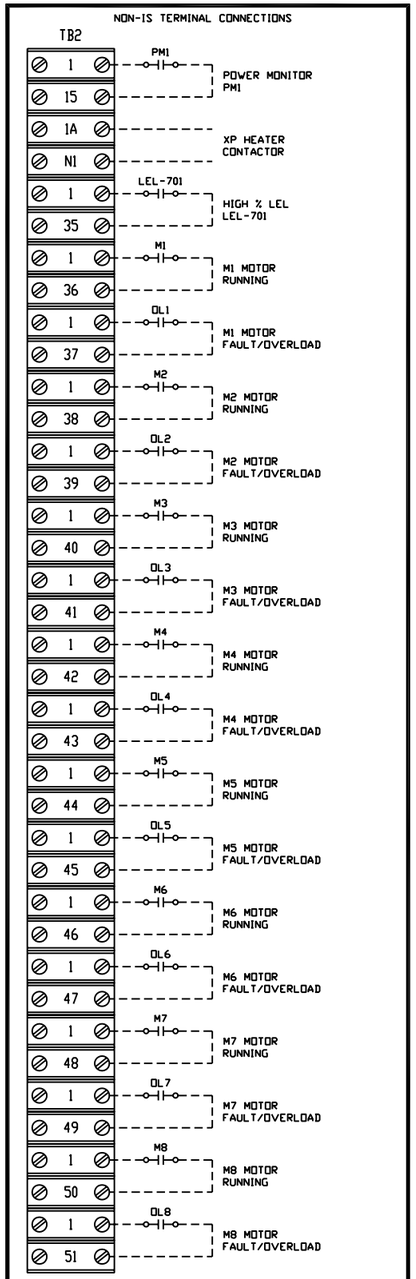

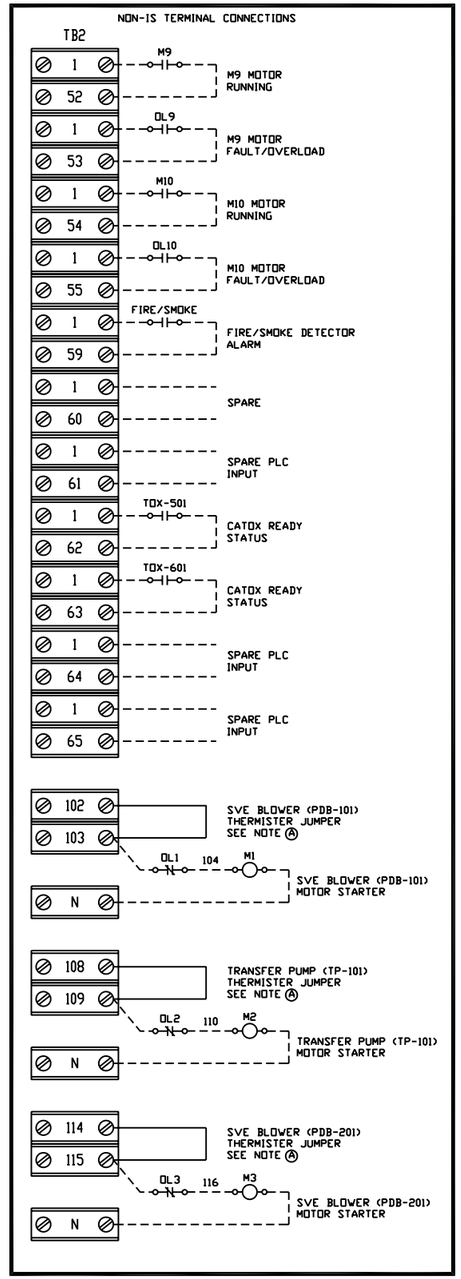

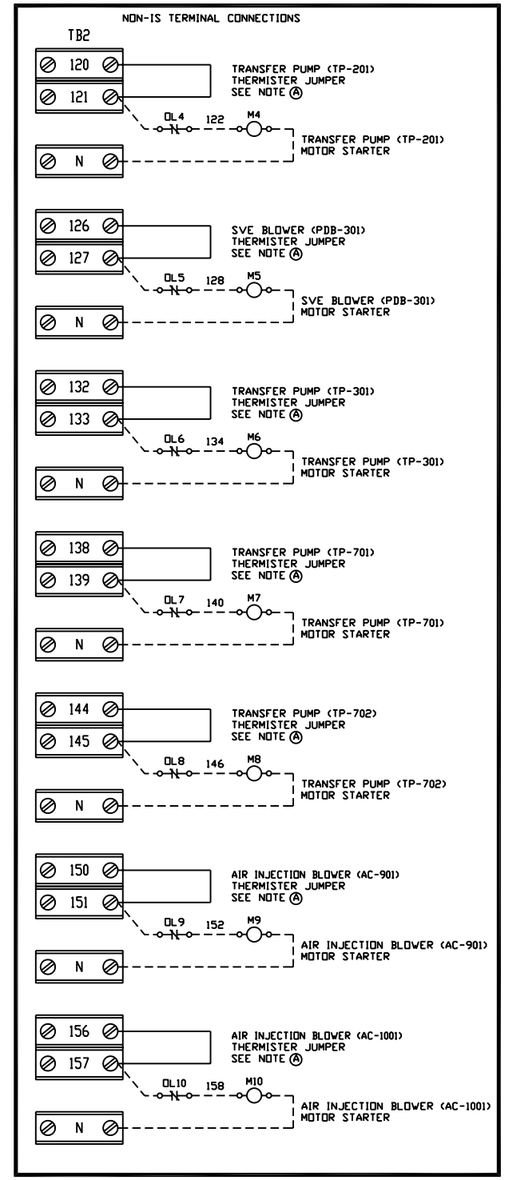

NOTE A: REMOVE JUMPER AND CONNECT MOTOR THERMISTER IF PRESENT.

NOTE B: BASED ON NFPA 70: NEC 2011 SET OVERLOAD RELAYS ACCORDING TO ACTUAL FLA AT INSTALLATION.

NOTE C: UL LISTED 508A & 698A, TYPE 3R, INDUSTRIAL CONTROL PANELS.

NOTE D: ———— WIRING BY BISCO WITHIN THIS PANEL.

NOTE E: - - - - - - WIRING BY BISCO REMOTE TO THIS PANEL.

NOTE F: - - - - - - REMOTE / FIELD WIRING BY OTHERS.

REV.	DESCRIPTION	DATE	APPR.
B	AS BUILT	11-28-11	LPC
A	CHANGED TO COMPACT GUARDLOGIX PLC	10-20-11	LPC

REVISIONS

CONFIDENTIALITY NOTE:
The information contained in this drawing is intended for use only by BISCO Environmental and the organization listed below. The information is confidential and any copying, distribution or dissemination without the consent of BISCO Environmental is STRICTLY PROHIBITED.

BISCO Environmental
Soil & Groundwater Remediation Equipment
Taunton, Massachusetts 02780

DRAWN BY LPC	DATE 9-7-11	TITLE CONTROL PANEL	
CHK BY	DATE	XDD, LLC. W.G. KRUMMRICH - SAUGET, IL	JOB NO. 12936
APPR BY	DATE	SCALE N/A / SIZE B / DWG NO. 12936RAS	SHEET 7 OF 10 / REV B

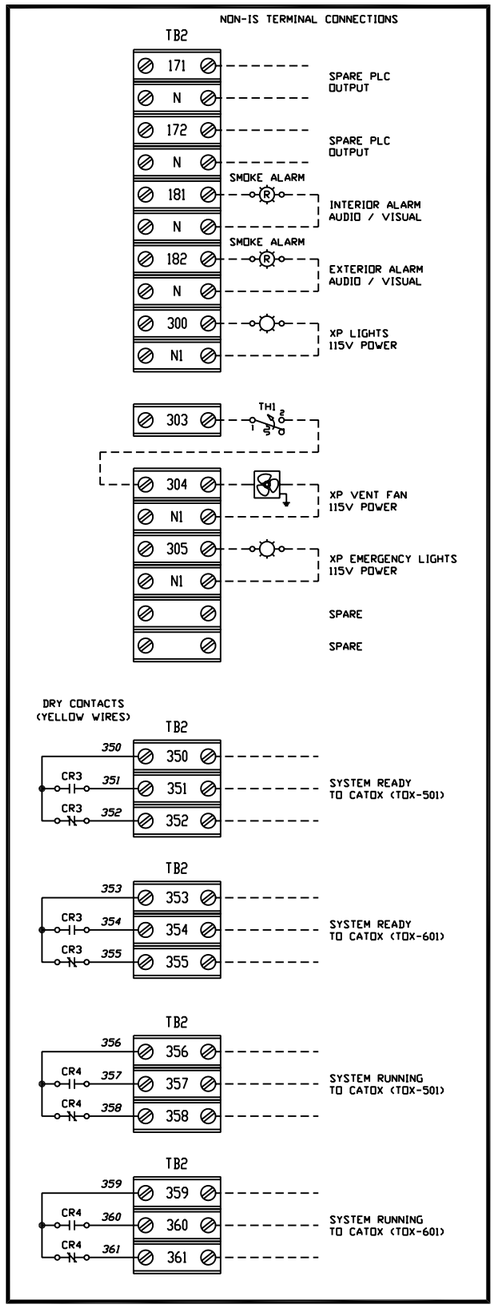

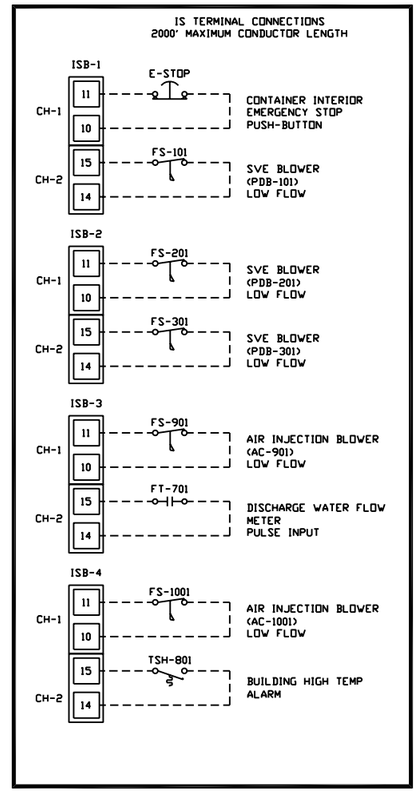

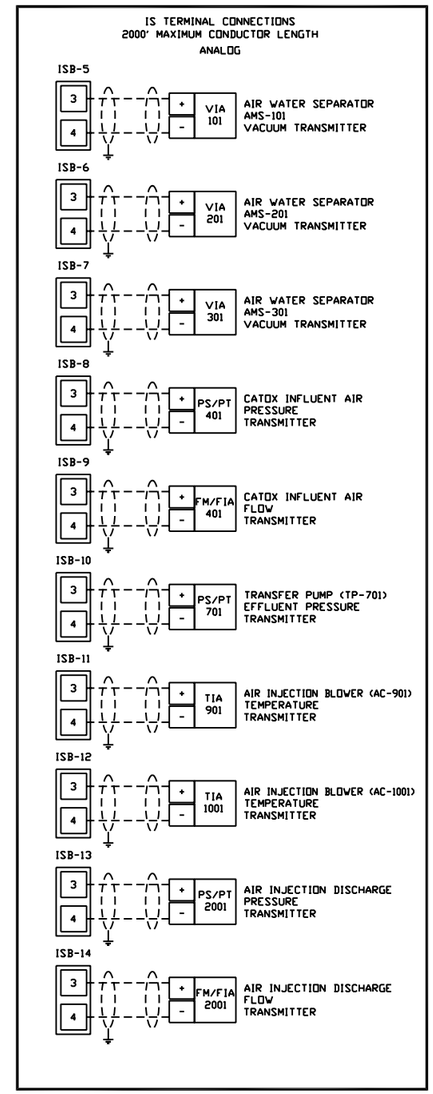

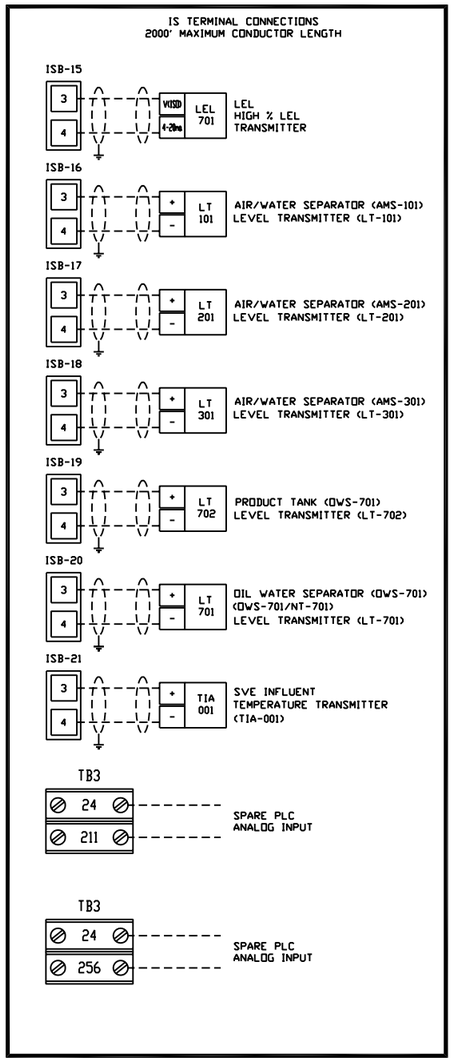

NOTE (A): REMOVE JUMPER AND CONNECT MOTOR THERMISTER IF PRESENT.

NOTE (B): BASED ON NFPA 70: NEC 2011 SET OVERLOAD RELAYS ACCORDING TO ACTUAL FLA AT INSTALLATION.

NOTE (C): UL LISTED 508A & 698A, TYPE 3R, INDUSTRIAL CONTROL PANELS.

NOTE (D): ———— WIRING BY BISCO WITHIN THIS PANEL.

NOTE (E): - - - - - - WIRING BY BISCO REMOTE TO THIS PANEL.

NOTE (F): ▬ ▬ ▬ ▬ ▬ ▬ REMOTE / FIELD WIRING BY OTHERS.

REV.	DESCRIPTION	DATE	APPR.
B	AS BUILT	11-28-11	LPC
A	CHANGED TO COMPACT GUARDLOGIX PLC	10-20-11	LPC

REVISIONS

CONFIDENTIALITY NOTE:
The information contained in this drawing is intended for use only by BISCO Environmental and the organization listed below. The information is confidential and any copying, distribution or dissemination without the consent of BISCO Environmental is STRICTLY PROHIBITED.

DRAWN BY LPC DATE 9-7-11

CHK BY DATE

APPR BY DATE

BISCO Environmental
Soil & Groundwater Remediation Equipment
Taunton, Massachusetts 02780

TITLE
CONTROL PANEL

XDD, LLC.
W.G. KRUMMRICH - SAUGET, IL

JOB NO. 12936

SCALE	SIZE	DWG NO.	SHEET	REV
N/A	B	12936RAS	8 OF 10	B

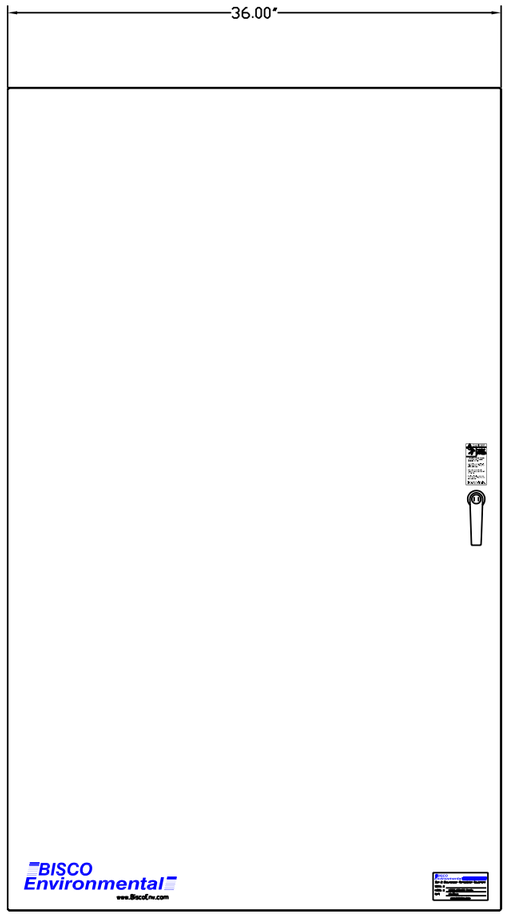

FRONT VIEW

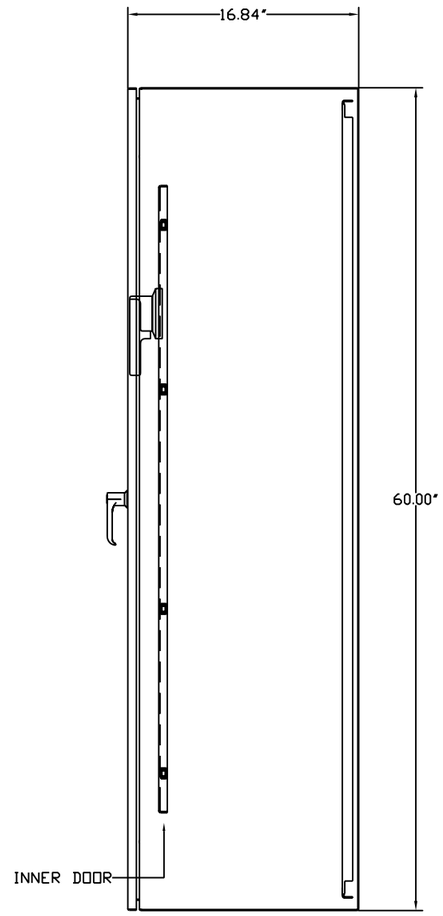

SIDE VIEW

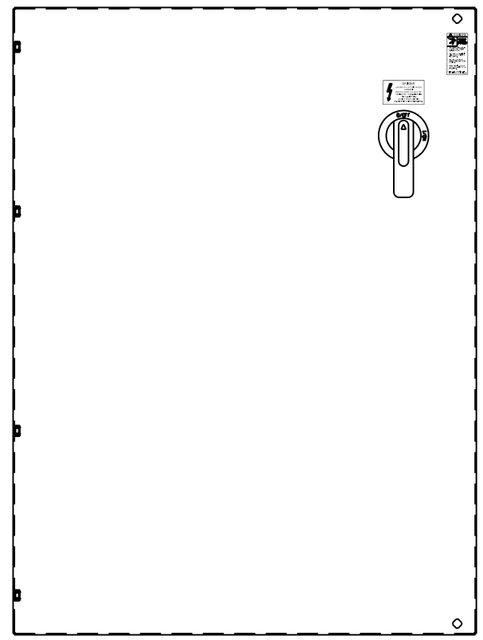

INNER DOOR

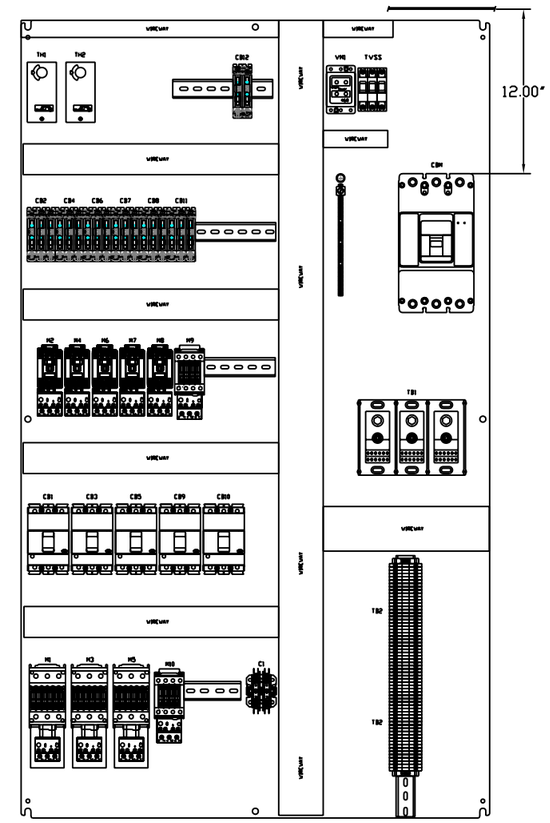

SUBPLATE LAYOUT

NOTE (A): REMOVE JUMPER AND CONNECT MOTOR THERMISTER IF PRESENT.

NOTE (B): BASED ON NFPA 70: NEC 2011 SET OVERLOAD RELAYS ACCORDING TO ACTUAL FLA AT INSTALLATION.

NOTE (C): UL LISTED 508A, TYPE 4, INDUSTRIAL CONTROL PANEL.

NOTE (D): ———— WIRING BY BISCO WITHIN THIS PANEL.

NOTE (E): - - - - - - WIRING BY BISCO REMOTE TO THIS PANEL.

NOTE (F): ▬ ▬ ▬ ▬ ▬ ▬ REMOTE / FIELD WIRING BY OTHERS.

REV.	DESCRIPTION	DATE	APPR.
B	AS BUILT	11-28-11	LPC
A	CHANGED TO COMPACT GUARDLOGIX PLC	10-20-11	LPC

REVISIONS

CONFIDENTIALITY NOTE:
The information contained in this drawing is intended for use only by BISCO Environmental and the organization listed below. The information is confidential and any copying, distribution or dissemination without the consent of BISCO Environmental is STRICTLY PROHIBITED.

DRAWN BY LPC DATE 9-7-11

CHK BY DATE

APPR BY DATE

BISCO Environmental
Soil & Groundwater Remediation Equipment
Taunton, Massachusetts 02780

TITLE POWER PANEL

XDD, LLC.
W.G. KRUMMRICH - SAUGET, IL

JOB NO. 12936

SCALE	SIZE	DWG NO.	SHEET	REV
N/A	B	12936RAS	9 OF 10	B

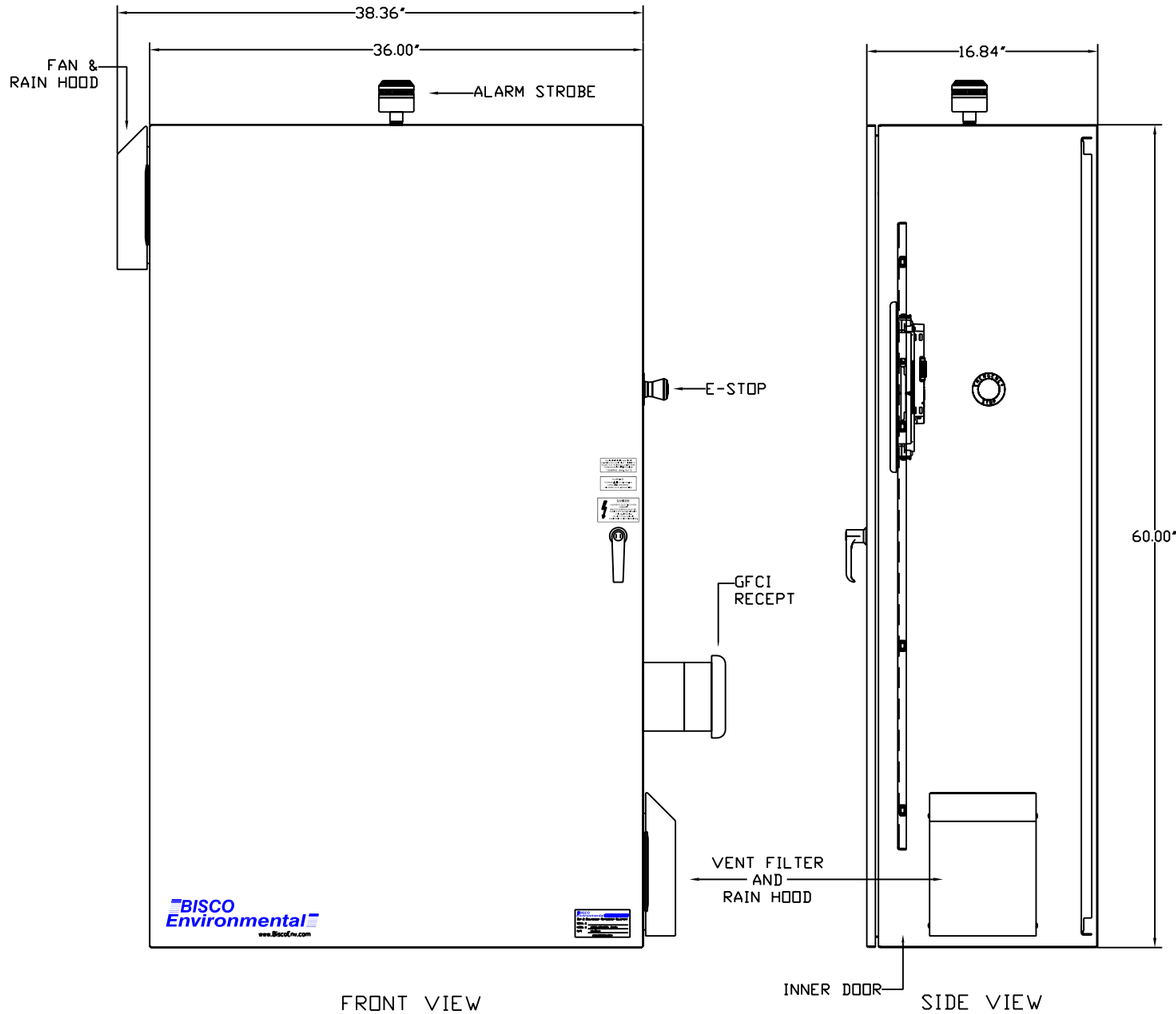

FRONT VIEW

SIDE VIEW

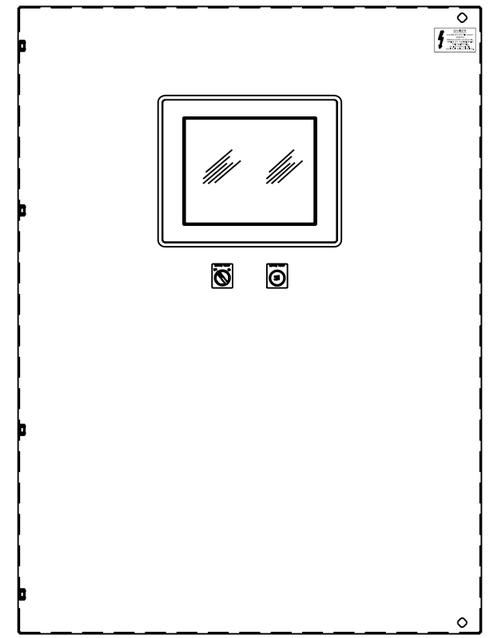

INNER DOOR

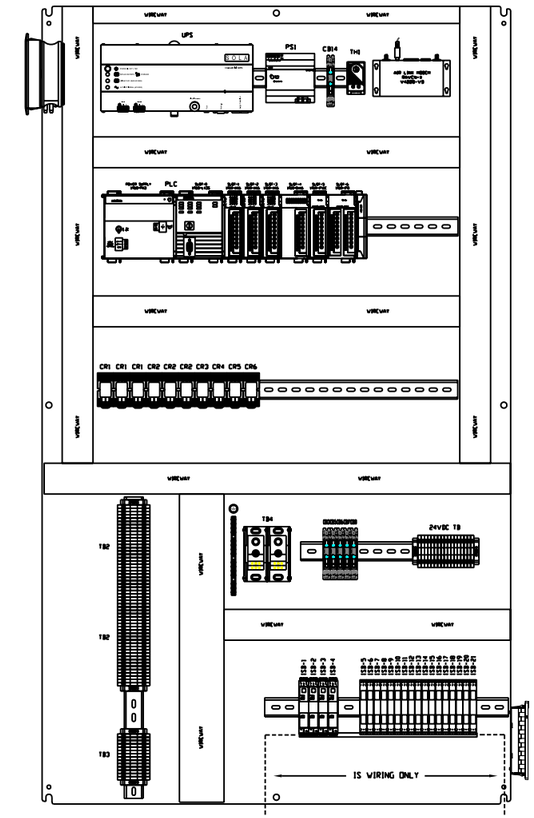

SUBPLATE LAYOUT

NOTE (A): REMOVE JUMPER AND CONNECT MOTOR THERMISTER IF PRESENT.

NOTE (B): BASED ON NFPA 70: NEC 2011 SET OVERLOAD RELAYS ACCORDING TO ACTUAL FLA AT INSTALLATION.

NOTE (C): UL LISTED 698A, TYPE 3R, INDUSTRIAL CONTROL PANEL.

NOTE (D): ———— WIRING BY BISCO WITHIN THIS PANEL.

NOTE (E): - - - - - - WIRING BY BISCO REMOTE TO THIS PANEL.

NOTE (F): ▬ ▬ ▬ ▬ ▬ REMOTE / FIELD WIRING BY OTHERS.

REV.	DESCRIPTION	DATE	APPR.
B	AS BUILT	11-28-11	LPC
A	CHANGED TO COMPACT GUARDLOGIX PLC	10-20-11	LPC

REVISIONS

CONFIDENTIALITY NOTE:
The information contained in this drawing is intended for use only by BISCO Environmental and the organization listed below. The information is confidential and any copying, distribution or dissemination without the consent of BISCO Environmental is STRICTLY PROHIBITED.

DRAWN BY LPC DATE 9-7-11

CHK BY DATE

APPR BY DATE

BISCO Environmental

Soil & Groundwater Remediation Equipment
Taunton, Massachusetts 02780

TITLE: CONTROL PANEL

XDD, LLC.
W.G. KRUMMRICH - SAUGET, IL

JOB NO. 12936

SCALE	SIZE	DWG NO.	SHEET	REV
N/A	B	12936RAS	10 OF 10	B

Pfannenberg Filterfan 4th Generation

- (D) **Montage- und Betriebsanleitung**
- (GB) **Installation- and operating instructions**
- (F) **Notice de montage et d´utilisation**
- (NL) **Montage- en gebruikshandleiding**
- (S) **Installations och bruksanvisning**
- (I) **Istruzioni di montaggio e per l´uso**
- (E) **Instrucciones de montaje y para uso**
- (RUS) **Инструкция по установке и эксплуатации**

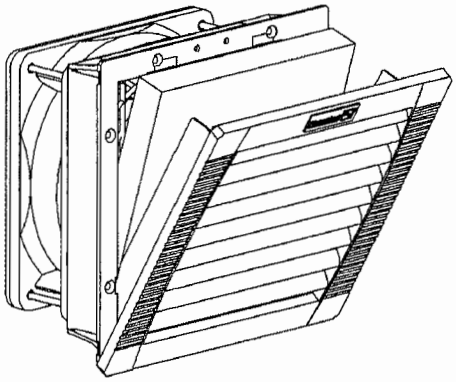

IP54/ TYPE 12 PF/ PF EMC

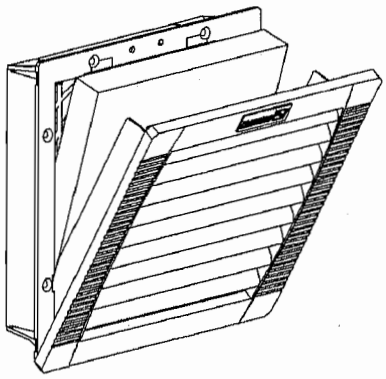

IP54/ TYPE 12 PFA/ PFA EMC

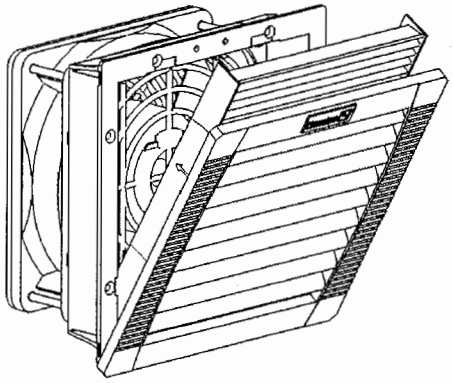

IP55/ TYPE 12 PF/ PF EMC

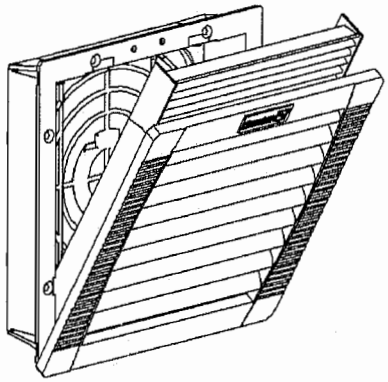

IP55/ TYPE 12 PFA/ PFA EMC

(D) Lesen Sie diese Anweisung und bewahren Sie diese auf.
(GB) Read and save this instruction.
(F) Lisez et sauvegardez ces instructions.
(NL) Deze instructies lezen en opslaan.
(S) Läs och spara dessa anvisningar.
(I) Legga e salvi queste istruzioni.
(E) Lea y salve estas instrucciones.
(RUS) Прочитайте, пожалуйста, данную инструкцию и сохраните ее

Pfannenberg
ELECTRO-TECHNOLOGY FOR INDUSTRY

Stand 05.2007
085408082 e

www.filterfan.com

(D) Ausschnitte und Abmessungen
(GB) Cut outs and dimensions
(F) Découpes de montage et dimensions
(NL) Uitsparingen en afmetingen
(S) Urklipp och dimensioner
(I) Dima di foratura e dimensioni
(E) Plantillas y dimensiones
(RUS) Монтажные вырезы и габаритные размеры

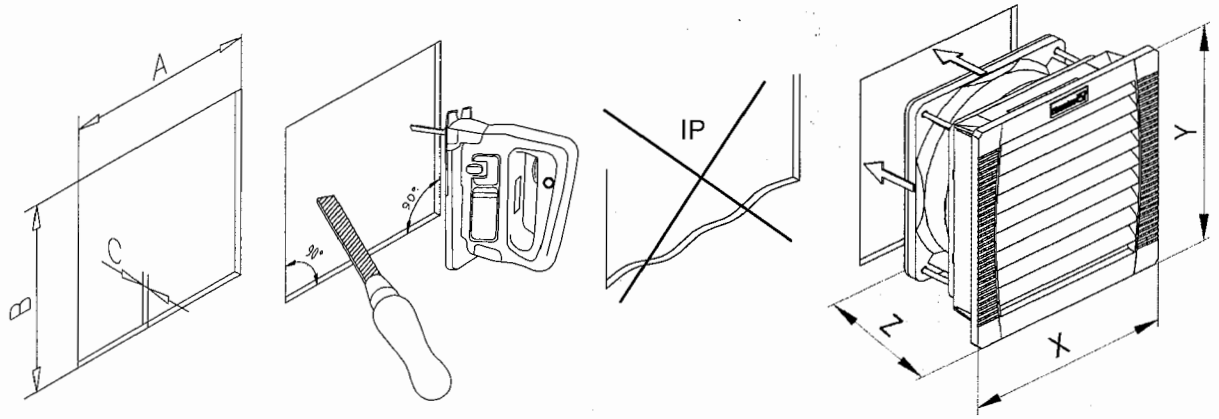

		A = B mm(inch)		X = Y mm(inch)	Z mm(inch)		
		Standard	EMC		PF		PFA
		$C \leq 2(0{,}08'') = A^{+1(0{,}04'')}_{0}$	±0,5 (0,02")		DC	AC	
		$C > 2(0{,}08'') \leq 3(0{,}12'') = A^{+2(0{,}08'')}_{+1(0{,}04'')}$					
PF 11000	PFA 10000	92($3^{5}/_{8}$")	93($3^{21}/_{32}$")	109($4^{19}/_{64}$")	53($2^{3}/_{32}$")	66($2^{19}/_{32}$")	23($^{29}/_{32}$")
PF 22000	PFA 20000	125($4^{59}/_{64}$")	126,5($4^{63}/_{64}$")	145($5^{45}/_{64}$")	69($2^{23}/_{32}$")	75($2^{61}/_{64}$")	31($1^{7}/_{32}$")
PF 32000	PFA 30000	177($6^{31}/_{32}$")	178 (7")	202($7^{61}/_{64}$")	87($3^{27}/_{64}$")	93($3^{43}/_{64}$")	40($1^{37}/_{64}$")
PF 42500	PFA 40000	223($8^{25}/_{32}$")	224($8^{53}/_{64}$")	252($9^{59}/_{64}$")	103($4^{1}/_{16}$")		44($1^{47}/_{64}$")
PF 43000					103($4^{1}/_{16}$")	119($4^{11}/_{16}$")	
PF 65000	PFA 60000	291($11^{29}/_{64}$")	292($11^{1}/_{2}$")	320($12^{19}/_{32}$")	157($6^{3}/_{16}$")		46($1^{13}/_{16}$")
PF 66000							
PF 67000							

(D) ACHTUNG: Nur in richtiger Einbaulage und bei Nicht-Zerstören der Dichtung ist IP 54 / 55 gewährleistet.
EMC Funktionsgewährleistung nur bei elektrisch leitfähiger Verbindung zwischen EMV- Schirmblech und Montageausschnitt.

(GB) CAUTION: The degree of protection IP 54 / 55 cannot be guaranteed unless the correct installation position and a non-destroyed sealing are ensured.
EMC Function cannot be guaranteed unless there is a conductive connection between the EMC-shield and the mounting cut out

(F) ATTENTION: IP 54 ne peut pas être garantie à moins qu'une position d'installation correcte et une étanchéite intacte soient assurées.
CEM La fonction n'est garantie que dans le cas d'un contact électroconducteur entre la tôle de protection CEM et la découpe pour le montage.

(NL) OPPASSEN: er us slechts sprake van klasse IP 54 / 55, als de mantage ruimtelijk precies op de voorgeschreven manier uitgevoerd is en als de afdichting niet beschadigd is.
EMC De functiegarantie geldt uitsluitend als er tussen de EMC-afscherming en de montage-uitsnijding een elektrisch geleidende verbinding bestaat.

(S) VARNING: IP 54 / 55 gäller endast vid rätt monteringdläge och vid hel packning.
EMC Funktionsgarantin gäller endast under förutsättning att det finns en elektriskt ledande förbindelse mellan EMC-skärmplåten och monteringsutskärningen

(I) ATTENZIONE: Il grado di protezione IP 54 / 55 può essere garantito esclusivamente tramite una posizione di montaggio corretta e non interferendo con la guarnizione die tenuta.
EMC Il funzionamento è garantito solo in caso di possibilità di collegamento elettricamente conducibile fra lo schermo in lamiera EMC e l'apertura di montaggio.

(E) PRECAUCION: La clase de protección IP 54 / 55 puede ser garantizida solamente si la hunta está instalada correctamente y sin destrucción.
EMC Sólo se garantiza el funcionamiento con una conexión eléctrica conductiva entre la chapa de proteccion EMC y el recorte de montaje.

(RUS) Внимание: Степень защиты IP 54 / 55 может быть гарантирована только при правильной установке и сохранности уплотнения.
EMC Функционирование возможно при наличии токопроводящего соединения между уплотнительной лентой EMC и монтажной стеной.

(D) Elektrischer Anschluss
(GB) Power connection
(F) Branchement électrique
(NL) Elektrische aansluiting
(S) Elanslutning
(I) Allacciamento elettrico
(E) Conexión de energía
(RUS) Электрическое подключение

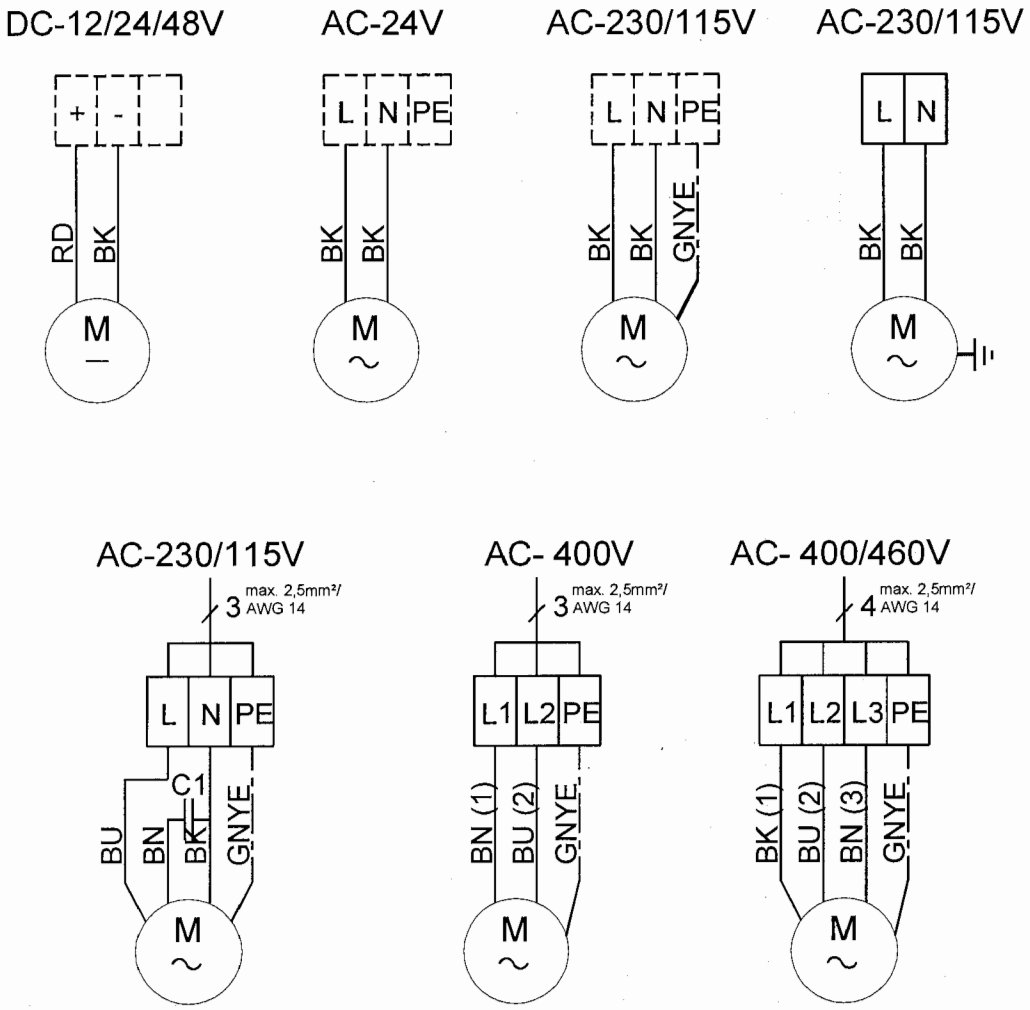

(D) Mindestabstand zwischen Lichtbogen bildenden Bauteilen und Filter: 30,5cm (12") (UL508A sec. 22)
(GB) Minimum distance of 30,5cm (12") between arcing parts and filters (acc. UL508A sec. 22)
(F) Distance minimale entre les pièces formant un arc et les filtres: 30,5 cm (12") (UL508A sec. 22)
(NL) Minimum afstand tussen lichtbogen vormende componenten en filters: 30,5cm (12") (UL508A sec. 22)
(S) Minsta avstånd mellan de ljusbågsbildande delar och filtret: 30,5 cm (12") (UL508A sec. 22)
(I) Distanza minima fra gli elementi che formano l'arco e il filtro: 30,5cm (12") (UL508A sec. 22)
(E) Distancia mínima entre los componentes del arco eléctrico y los filtros: 30,5 cm (12") (UL508A sec. 22)
(RUS) Минимальное расстояние между деталями, образующими электродугу, и фильтром: 30,5 см (12") (UL508A sec. 22)

(D) Technische Daten
(GB) Technical data
(F) Caractéristiques Techniques
(NL) Technische gegevens
(S) Tekniska data
(I) Dati tecnici
(E) Datos técnicos
(RUS) Технические данные

	U +/- DC	U ~ 50/60 Hz	P	I			Kg
	V	V	W	A			standard (EMC)
PF 11.000	12	--	2,4	0,2	-15.. + 55°C + 5.. +131°F	6A	0,16 (0,19)
PF 11.000	24	--	2,4	0,1			
PF 11.000	48	--	2,6	0,05			
PF 11.000	--	24	12/11	0,5/0,5			0,55 (0,58)
PF 11.000	--	115	12/11	0,15/0,15			
PF 11.000	--	230	12/11	0,07/0,06			
PF22.000	12	--	5	0,42	-15.. + 55°C + 5.. +131°F	6A	0,44 (0,49)
PF22.000	24	--	5	0,21			
PF22.000	48	--	5	0,1			
PF22.000	--	24	20/20	1,05/1,02			0,7 (0,76)
PF22.000	--	115	20/20	0,235/0,23			
PF22.000	--	230	19/18	0,12/0,18			
PF 32.000	12	--	5	0,42	-15.. + 55°C + 5.. +131°F	6A	0,61 (0,7)
PF 32.000	24	--	5	0,21			
PF 32.000	48	--	5	0,1			
PF 32.000	--	115	20/20	0,235/0,23			0,87 (0,96)
PF 32.000	--	230	19/18	0,12/0,18			
PF 42.500	12	--	6	0,5	-15.. + 55°C + 5.. +131°F	6A	0,92 (1,08)
PF 42.500	24	--	4,7	0,2			
PF 42.500	48	--	4,6	0,1			
PF 42.500	--	115	18/17	0,25/0,25			1,18 (1,34)
PF 42.500	--	230	18/17	0,12/0,1			
PF 43.000	12	--	12	1	-15.. + 55°C + 5.. +131°F	6A	1,51 (1,77)
PF 43.000	24	--	12	0,5			
PF 43.000	48	--	12	0,25			
PF 43.000	--	115	40/40	0,5/0,5			1,67 (1,83)
PF 43.000	--	230	45/39	0,32/0,26			
PF 43.000	--	400	41/38	0,13/0,13			
PF 65.000	--	115	75/90	0,66/0,8	-15.. + 55°C + 5.. +131°F	6A	3,2 (3,43)
PF 65.000	--	230	65/80	0,3/0,36			
PF 66.000	--	115	110/160	0,96/1,4	-15.. + 55°C + 5.. +131°F	6A	3,2 (3,43)
PF 66.000	--	230	115/150	0,51/0,66			
PF 66.000	--	400/460	120/155	0,26/0,25			
PF 67.000	--	115	140/195	1,23/1,71	-15.. + 55°C + 5.. +131°F	6A	3,7 (3,93)
PF 67.000	--	230	135/215	0,59/1			
PF 67.000	--	400/460	140/170	0,35/0,425			

PFA 10.000	--	--	-15.. + 55°C + 5.. +131°F	--	0,06 (0,09)
PFA 20.000					0,12 (0,18)
PFA 30.000					0,26 (0,35)
PFA 40.000					0,46 (0,62)
PFA 60.000					0,7 (0,93)

Ⓓ Ersatzteilbeschaffung
Ⓖⓑ Ordering spare parts
Ⓕ Approvisionnement en pièces détachées
Ⓝⓛ Bestelling van onderdelen
Ⓢ Beställning av reservdelar
Ⓘ Fornitura delle parti di ricambio
Ⓔ Adquisición de repuestos
Ⓡⓤⓢ Приобретение запасных деталей

www.filterfan.com · spareparts@pfannenberg.com

	U +/- DC	U ~ 50/60 Hz	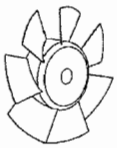	IP54/ TYPE 12 5x	IP 55/ TYPE 12 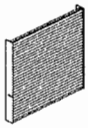 5x
PF 11.000	12V	-	18611000036	18611600029	--
	24V	-	18611000039		
	48V	-	18611000042		
	-	24V	18611000005		
	-	115V	18611000028		
	-	230V	18611000032		
PFA 10.000	--	--	--		
PF 22.000	12V	-	18611000025	18611600030	18611600034
	24V	-	18611000026		
	48V	-	18611000027		
	-	24V	18611000006		
	-	115V	18611000009		
	-	230V	18611000016		
PFA 20.000	--	--	--		
PF 32.000	12V	-	18611000025	18611600031	18611600035
	24V	-	18611000026		
	48V	-	18611000027		
	-	24V	18611000006		
	-	115V	18611000009		
	-	230V	18611000016		
PFA 30.000	--	--	--		
PF 42.500	12V	-	18611000037	18611600032	18611600036
	24V	-	18611000040		
	48V	-	18611000054		
	-	115V	18611000029		
	-	230V	18611000033		
PF 43.000	12V	-	18611000055		
	24V	-	18611000056		
	48V	-	18611000057		
	-	115V	18611000012		
	-	230V	18611000019		
	-	400V	18611000022		
PFA 40.000	--	--	--		
PF 65.000	-	115V	18611000047	18611600033	18611600037
	-	230V	18611000044		
PF 66.000	-	115V	18611000048		
	-	230V	18611000045		
	-	400/460V	18611000050		
PF 67.000	-	115V	18611000049		
	-	230V	18611000046		
	-	400/460V	18611000051		
PFA 60.000	--	--	--		

(D) Filterwechsel / Wartung
(GB) Filter change / Maintenance
(F) Remplacement de la cartouche Filtrante / Entretien
(NL) Filter vervanging / Onderhoud
(S) Fliterbyte / Underhåll
(I) Filtri di ricambio / Manutenzione
(E) Cambio de filtro / Mantenimiento
(RUS) Замена фильтра/ Техническое обслуживание

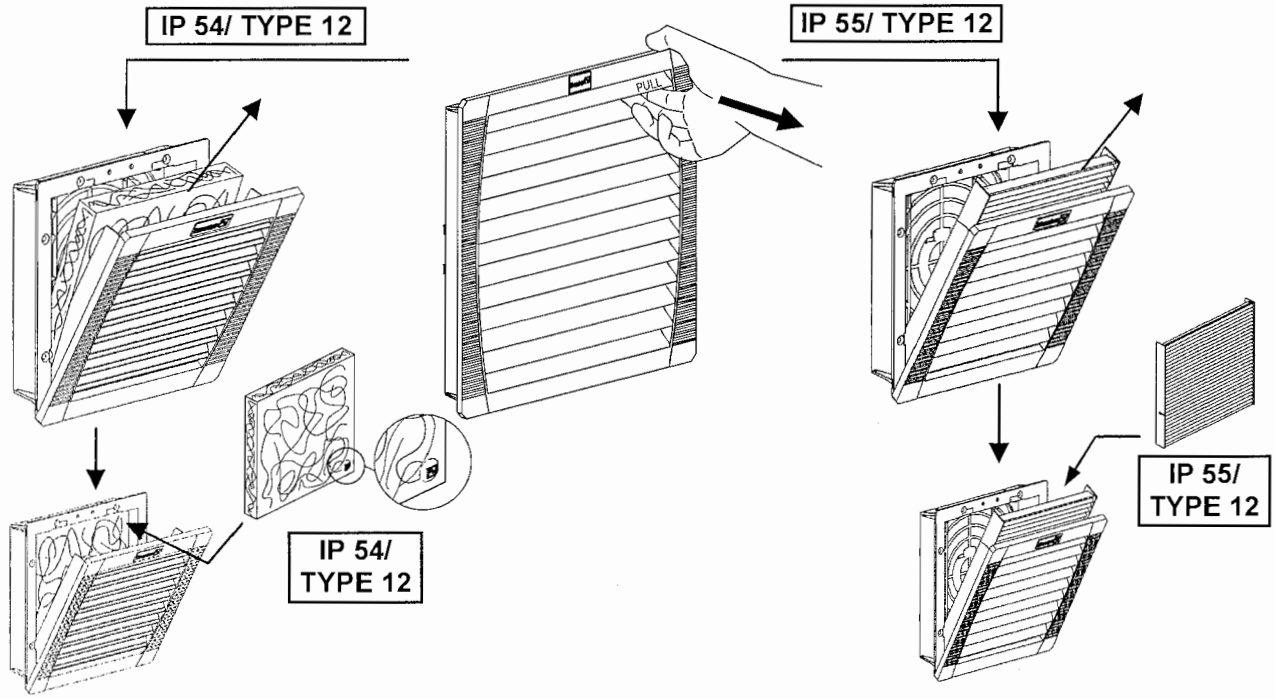

(D) IP 54/ 55/ TYPE 12: Auf korrekte Einbaulage des Filters achten
(GB) IP 54/ 55/ TYPE 12: Make sure that the filter is installed in the proper position.
(F) IP 54/ 55/ TYPE 12: Veillez à insérer correctement le filtre
(NL) IP 54/ 55/ TYPE 12: Op correcte inbouwpositie van het filter letten
(S) IP 54/ 55/ ZYPE 12: Beakta korrekt monteringsläge för filtret
(I) IP 54/ 55 /TYPE 12: Rispettare la corretta posizione di montaggio del filtro.
(E) IP 54/ 55 /TYPE 12: Procure que la posición de montaje del filtro sea la correcta
(RUS) IP 54/ 55/ TYPE 12: Следите за правильным положением фильтра

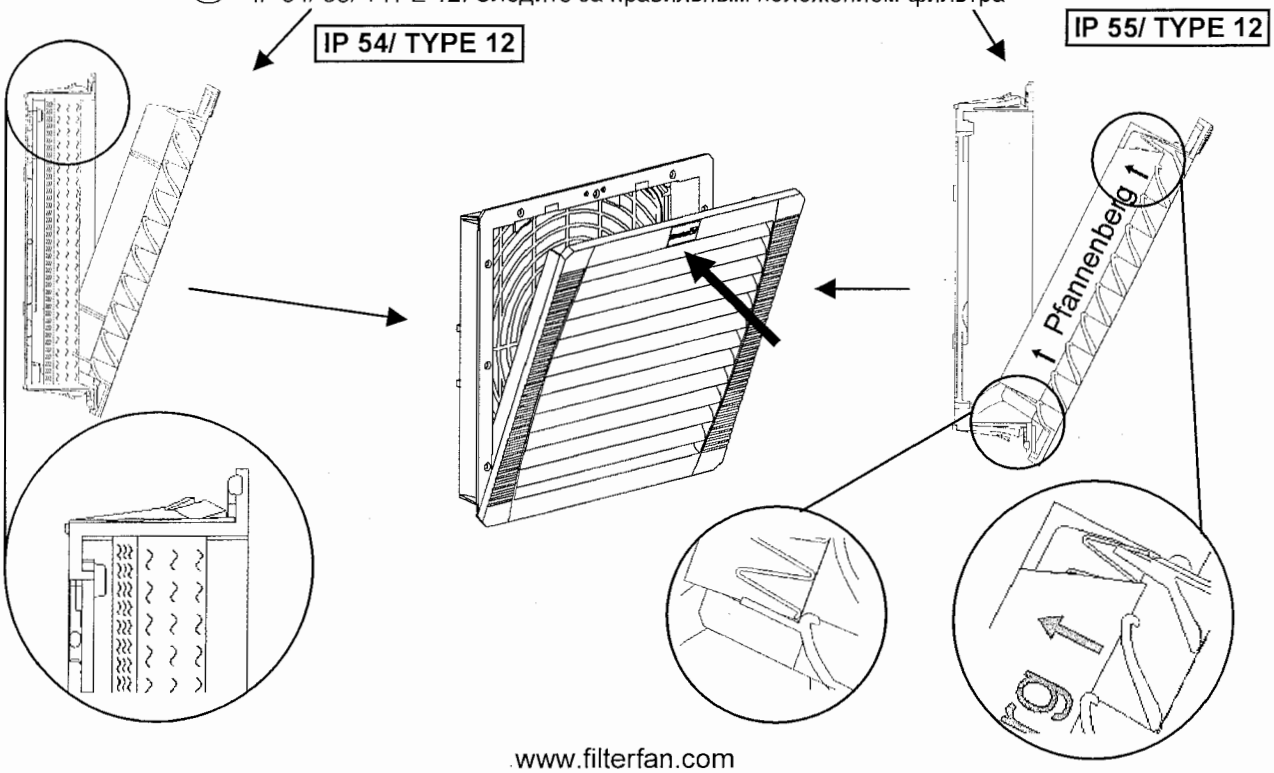

Ⓓ Wechsel der Luftförderrichtung
Ⓖⓑ Changing the air flow direction
Ⓕ Changement de la direction de l'air
Ⓝⓛ Omwisselen van de luchttransportrichting
Ⓢ Ändring av riktning för luftmatning
Ⓘ Cambio di direzione del flusso d'aria
Ⓔ Cambio de dirección del flujo de aire
Ⓡⓤⓢ Изменение направления движения воздуха

PF 1x.000 – PF 4x.000

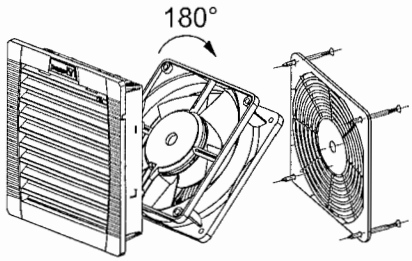

PF 6x.000

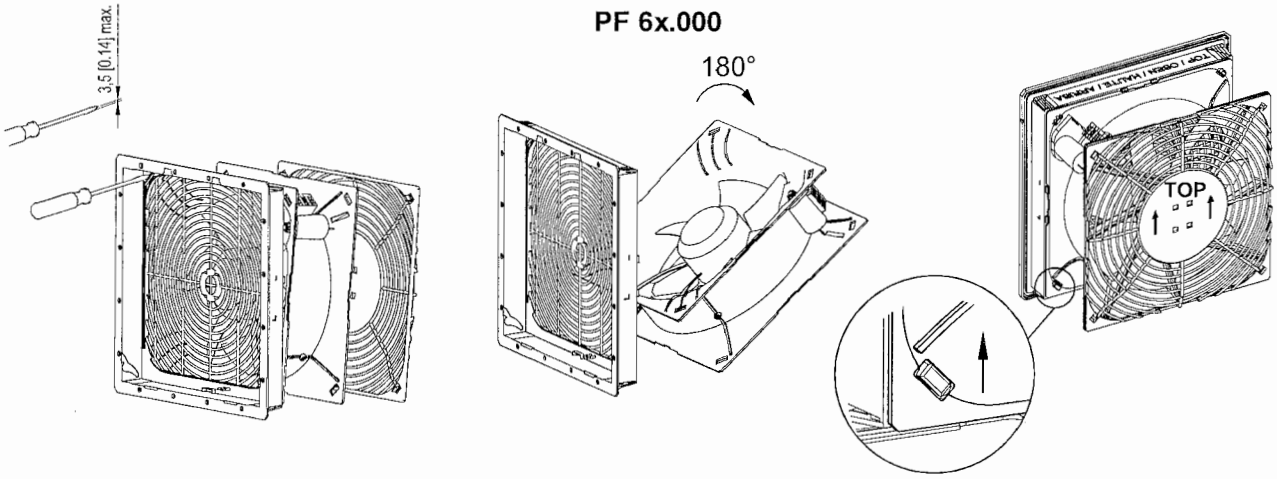

Ⓓ Verwenden Sie **ausschließlich Original Pfannenberg Ersatzteile**, anderenfalls erlöschen Gewährleistung und Zulassungen. Weiterhin sind bei Nichtverwendung der Original Ersatzteile Schutzarten und Leistungsdaten nicht mehr sichergestellt.

Ⓖⓑ Warranty and licenses **are limited to original Pfannenberg spare parts** and become void if other spare parts are used. Furthermore, ingress protection and capacity levels are no longer ensured if original Pfannenberg spare parts are not used.

Ⓕ Veuillez utiliser **exclusivement les pièces détachées d'origine de Pfannenberg**, sinon la garantie et les homologations ne sont plus applicables. Il en va de même pour les types de protection et les caractéristiques de performance.

Ⓝⓛ Gebruik **uitsluitend originele onderdelen van Pfannenberg**, omdat anders garantiewaarborgen en certificeringen vervallen. Tevens zijn bij het niet gebruiken van originele onderdelen beveiligingsgraden en prestatiespecificaties niet langer gewaarborgd.

Ⓢ Använd **uteslutande Pfannenbergs original reservdelar**, annars upphör garantin att gälla. Vidare kan eventuella fel eller reparationer som beror på att inte original Pfannenberg reservdelar används leda till att skyddsklass och effektdata inte längre säkerställas.

Ⓘ Utilizzare **esclusivamente parti di ricambio originali Pfannenberg**, pena l'estinzione della garanzia e delle autorizzazioni. Inoltre, in caso di mancato utilizzo delle parti di ricambio originali, non sono più garantiti i tipi di protezione e le caratteristiche di funzionamento.

Ⓔ Utilice **únicamente repuestos originales de Pfannenberg**; de lo contrario, quedarán sin validez la garantía y las licencias. Además, en caso de no usar dichos repuestos originales, no se podrán garantizar la seguridad ni los datos de rendimiento.

Ⓡⓤⓢ Используйте **только оригинальные запасные части от фирмы Pfannenberg**, в противном случае прекращается действие гарантии и допуска к эксплуатации. Кроме того, мы не гарантируем при использовании неоригинальных деталей соблюдение требований по категории защиты и рабочих характеристик.

ELECTRO-TECHNOLOGY FOR INDUSTRY

Konformitätserklärung / Declaration of Conformity

gemäß den EG-Richtlinien / according to EC directives

- **Elektromagnetische Verträglichkeit / Electromagnetic compatibility 89/336/EEC**
- **Niederspannungsrichtlinie / Low-voltage 73/23/EEC**

Die Geräte / The devices:

Hersteller / Manufacturer: **Pfannenberg GmbH**

Produkt / Product: **Filterlüfter / Filter Fan**

Type:		
	PF 11.000:	12V DC, 24V DC, 48V DC, 24V AC, 115V AC[1]), 230V AC[1])
	PF 22.000:	12V DC, 24V DC, 48V DC, 24V AC, 115V AC[1]), 230V AC[1])
	PF 32.000:	12V DC, 24V DC, 48V DC, 24V AC, 115V AC[1]), 230V AC[1])
	PF 42.500:	12V DC, 24V DC, 48V DC, 115V AC[1]), 230V AC[1])
	PF 43.000:	12V DC, 24V DC, 48V DC, 115V AC[1]), 230V AC[1]), 400 AC[1])
	PF 65.000:	115V AC[1]), 230V AC[1])
	PF 66.000:	115V AC[1]), 230V AC[1]), 400V AC[1])
	PF 67.000:	115V AC[1]), 230V AC[1]), 400V AC[1])

[1]): Niederspannungsrichtlinie / Low voltage directive

wurden entwickelt, konstruiert und gefertigt in Übereinstimmung mit den o.g. EU-Richtlinien, in alleiniger Verantwortung von:
were developed, designed and manufactured to comply with the above-mentioned EC directives, under the sole responsibility of:

Pfannenberg GmbH
Werner-Witt-Str. 1
D-21035 Hamburg

Folgende harmonisierte Normen wurden angewandt / The following harmonised standards were applicable :

- DIN EN ISO 12100-2 (2004) Sicherheit von Maschinen - Grundbegriffe, allgemeine Gestaltungsleitsätze - Teil 2: Technische Leitsätze (ISO 12100-2:2003); Safety of machinery, Basic concepts, general principles for design – Part 2: Technical principles
- DIN EN 60335-2-80 (2004) Sicherheit elektrischer Geräte für den Hausgebrauch und ähnliche Zwecke - Teil 2-80: Besondere Anforderungen für Ventilatoren (IEC 60335-2-80:2002); Household and similar electrical appliances - Safety - Part 2-80: Particular requirements for fans
- DIN EN 61000-6-2 (2001) Fachgrundnorm, Störfestigkeit für Industriebereich / Electromagnetic compatibility (EMC), Generic standards: Immunity for industrial environments
- DIN EN 61000-6-3 (2001) Fachgrundnorm, Störaussendung im Wohnbereich / Electromagnetic compatibility (EMC), Generic standards; Emission standard for residential
- DIN EN 60529 (2000) Schutzarten durch Gehäuse (IP-Code) / Degrees of protection provided by enclosures (IP code)
- DIN IEC 60038 (2002) IEC-Normspannungen / IEC standard voltages

Folgende nationale Normen, Richtlinien und Spezifikationen wurden angewandt :
The following standards, guidelines and specifications were applicable at national level:

- UVV-BGV A3 Unfallverhütungsvorschrift für Elektrische Anlagen und Betriebsmittel / Accident prevention regulation for electrical systems and machinery
- GPSG Geräte- und Produktsicherheitsgesetz / German law - covering equipment and product safety

Eine Technische Dokumentation ist beim Hersteller vorhanden, die Montage-/Betriebsanleitung liegt dem Gerät bei. Die Sicherheitshinweise sind zu beachten. Diese Erklärung bescheinigt die Übereinstimmung mit den genannten Richtlinien.
The manufacturer is in possession of the technical documentation, the installation/operation instruction is attached to the device. The safety references are to be considered. This explanation certifies the agreement with the guidelines mentioned.

Hamburg, 22.09.2006
Rev.Nr.:01

Nils Halm
Technischer Leiter / Technical Director

Thermostat FLZ 520 / FLZ 530

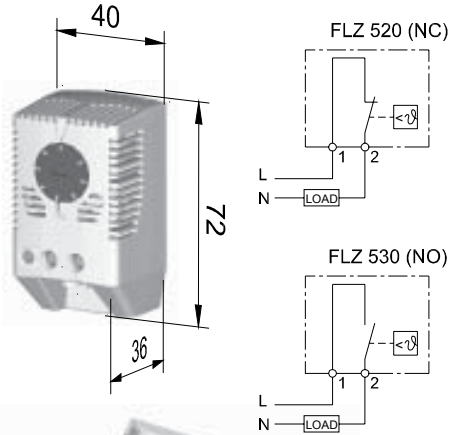

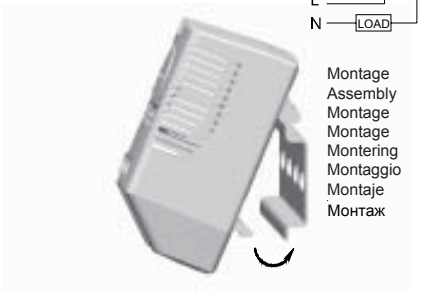

Montage
Assembly
Montage
Montage
Montering
Montaggio
Montaje
Монтаж

GB

Thermostat FLZ 520/530 Instructions for Use

FLZ 520 – Opener (Contact opens with rising temperature – Setting knob with red imprint) **FLZ 530 – Shutter** (Contact closes with rising temperature – Setting knob with blue imprint)			
Setting ranges	-20°C .. +40°C / -5°F .. +105°F	0°C .. +60°C / +30°F .. +140°F	+20°C .. +80°C / +70°F .. +180°F
Working temperature range	-20°C..+80°C / -5°F..+180°F		
Max. breaking capacity	240V AC, 10 (2)A / 120V AC, 15 (2)A Value in brackets: inductive load at cos.φ=0.6 DC: max. 30W		
Temperature difference	< 7K		
Tolerance for switching point	+/- 4K		
Type of contact	Opener – NC / Shutter – NO (snap-action contact)		
Type of connection	2-pole clamp, 2,5mm²		
Colour	RAL 7035 – grey		
Protection category	IP 20		
Assembly	Snap fastening for - 35mm profile bars in accordance with EN 60715 - Pfannenberg exhaust filter PFA 3000		

Application:
The thermostats are used for the temperature regulation of cooling units, heating appliances, filter ventilators and heat exchangers inside switch cabinets.
Moreover, they can be used as signal transmitters for reporting excess or insufficient temperatures.

Safety instructions
The thermostats may only be installed by qualified staff.
The protective measures and the protection against contact are to be ensured by the installation.
The information on the name plate (voltage and current) is to be heeded.
The operational reliability of the thermostat is to be ensured by an operating test.

Installation instructions:
- The thermostat should be assembled in the upper part of the switch cabinet at the maximum possible distance from heat creating components.
- The ventilation slots of the thermostat should not be covered.
- For the temperature setting of the opener the highest possible hysteresis must be added to the required minimum temperature.

For example:
- required minimum temperature inside switch cabinet: 9°C (46°F)
- temperature to be set: 20°C (66°F)
- resulting from: 20°C (66°F) = required temperature 9°C + highest possible hysteresis 11K (7K+4K)

Installation Instructions for DK, KDB, KD, HKD, KDC, KW, HKW, KWC, CKD, CHKD Circuit Breakers and Molded Case Switches

WARNING

DO NOT ATTEMPT TO INSTALL OR PERFORM MAINTENANCE ON EQUIPMENT WHILE IT IS ENERGIZED. DEATH, SEVERE PERSONAL INJURY, OR SUBSTANTIAL PROPERTY DAMAGE CAN RESULT FROM CONTACT WITH ENERGIZED EQUIPMENT. ALWAYS VERIFY THAT NO VOLTAGE IS PRESENT BEFORE PROCEEDING WITH THE TASK, AND ALWAYS FOLLOW GENERALLY ACCEPTED SAFETY PROCEDURES.

CUTLER-HAMMER IS NOT LIABLE FOR THE MISAPPLICATION OR MISINSTALLATION OF ITS PRODUCTS.

The user is cautioned to observe all recommendations, warnings, and cautions relating to the safety of personnel and equipment as well as all general and local health and safety laws, codes, and procedures.

Figure 1-1 K-Frame Model D Series C Circuit Breaker Frame with KT Trip Unit Installed

The recommendations and information contained herein are based on Cutler-Hammer experience and judgment, but should not be considered to be all-inclusive or covering every application or circumstance which may arise. If any questions arise, contact Cutler-Hammer for further information or instructions.

1. INTRODUCTION

General Information

The K-frame Series C circuit breaker (Figure **1-1**) types KD, HKD, and KDC are 600 Vac maximum rated devices with interchangeable thermal-magnetic or electronic (Seltronic) trip units rated 400A maximum continuous current. Circuit breaker types KW, HKW, and KWC are 660 Vac maximum rated devices using interchangeable adjustable thermal/adjustable magnetic or electronic trip units rated up to 400A continuous current. The type KDB noninterchangeable trip circuit breaker is rated 600 Vac maximum with a maximum continuous current rating of 400A. The type DK 240 Vac maximum circuit breaker is also a noninterchangeable trip device with trip unit ratings from 250A to 400A. Refer to Table **4-1** on page 8 for all available trip unit ratings. Model D circuit breakers are listed in accordance with Underwriters Laboratories, Inc. Standard UL489 and satisfy the (P1) requirements of the International Electrotechnical Commission Recommendations No. IEC 157-1. Model W circuit breakers satisfy the requirements of IEC C947-2. Molded case switches are listed in accordance with UL1087. For more information, see Frame Book 29-103.

100 Percent Rated K-Frame Circuit Breakers

CKD and CHKD circuit breakers are suitable for continuous operation at 100 percent of the frame rating if used with an 90°C insulated wire and AL9CU terminals in an enclosure which measures at least 24” high x 15” wide x 6” deep. Ventilation is not required in an enclosure having these minimum dimensions. CKD and CHKD 100 percent rated circuit breakers use electronic trip units only.

This instruction leaflet (IL) gives procedures for installation and field testing of K-frame Series C circuit breakers. Instructions are also provided for replacement of existing Cutler-Hammer circuit breaker types DA, LB, LBB, HLB, JA, KA, and HKA. For this publication, the term circuit breaker shall also include the molded case switch.

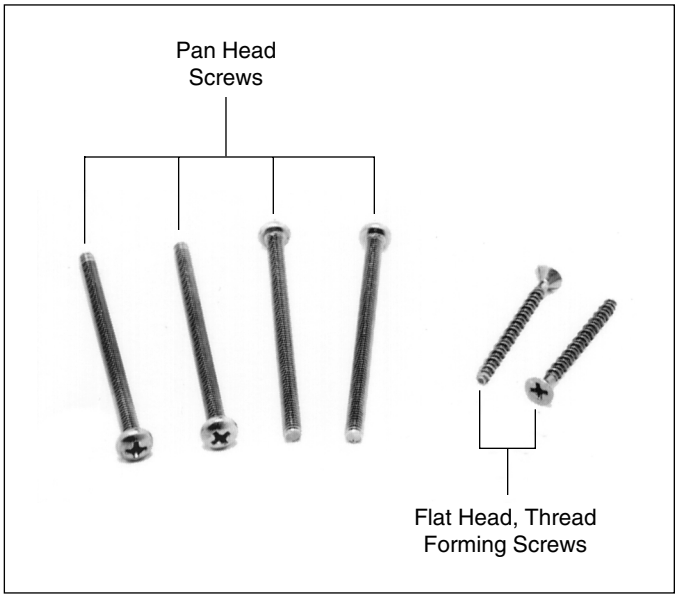

Figure 2-1 Cover Mounting Hardware

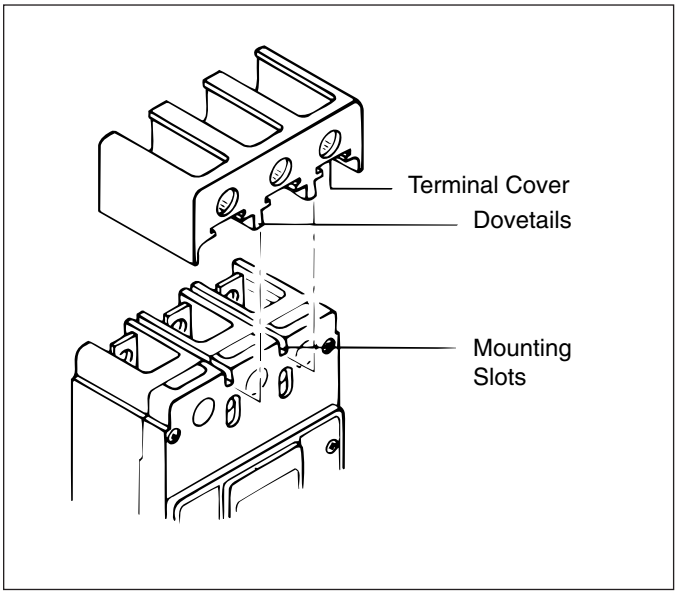

Figure 2-3 Terminal Cover Installation

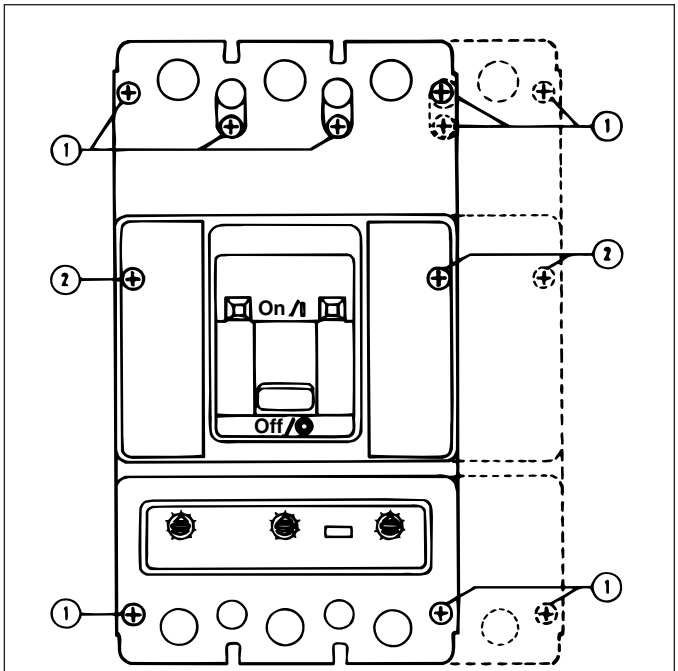

(1) Screw, .190-32 x 3.125 Inch Pan Head, Cross-Recessed.
(2) Screw, No. 8 x 1.63 Inch, Flat Head, Cross-Recessed, Thread Forming.

Note: Hatched lines show additional pole and screws for 4-pole circuit breaker.

Figure 2-2 Cover Screw Installation Positions

2. INSTALLATION

The installation procedure consists of inspecting the circuit breaker and, as applicable, installing the trip unit and rating plug, accessories, interphase barriers, and terminals; mounting the circuit breaker; connecting the line and load conductors; torquing terminals; and attaching terminal shields. Circuit breaker frames, trip units, rating plugs, accessories, mounting hardware, and unmounted terminals may be supplied in separate packages. To install the circuit breaker, perform the following steps.

NOTICE

If circuit breaker is replacing a DA, JA, KA, HKA, LB, LBB, or HLB circuit breaker, refer to section 3 of this instruction leaflet.

DK and KDB circuit breakers are factory sealed for reverse feed applications under UL489. UL requires that internal accessories be installed at the factory in these types of circuit breakers.

NOTICE

If required, internal accessory installation in any type of circuit breaker should be done before the

circuit breaker is mounted and connected. Refer to individual accessory instruction leaflets.

2-1. Make sure that the circuit breaker is suitable for the intended installation by comparing nameplate data with existing equipment ratings and system requirements. Inspect the circuit breaker for completeness, and check for damage before mounting. Uninstalled cover mounting hardware is supplied in a plastic bag with the circuit breaker frame. (See Figure **2-1**.)

2-2. Remove installed cover screws and cover.

NOTICE

The circuit breaker handle must be in the tripped or OFF position to remove the cover. Instructions for installing the trip unit and accessories are supplied with the devices.

2-3. If not already installed, mount trip unit and accessories (if required) in circuit breaker frame. Rating plug must be installed in Seltronic trip units.

CAUTION

WHEN REMOVED AND REINSTALLED, THREAD-FORMING SCREWS WILL TRY TO REFORM THE THREADS IN THE BASE. CARE SHOULD BE TAKEN EVERY TIME A THREAD-FORMING SCREW IS USED TO ENSURE THE SCREW STARTS IN THE ORIGINAL THREADS. DAMAGED THREADS CAN RESULT IN IMPROPER CIRCUIT BREAKER COVER RETENTION.

2-4. Replace cover and install pan-head screws followed by thread-forming screws as shown in Figure **2-2**.

2-5. If not already installed, mount terminals as shown in Figure **2-4**. Secure the terminals to the circuit breaker using a 7/32-inch socket wrench, and torque to 6-8 lb-ft (8-11 N.m). After mounting the circuit breaker and before installation of the conductors, the terminal mounting screw can be checked or retightened through the terminal when the conductor screw is removed. If Warning label is supplied with terminal, place on upper portion of circuit breaker cover.

WARNING

THE VOLTAGE IN ENERGIZED EQUIPMENT CAN CAUSE DEATH OR SEVERE PERSONAL INJURY. BEFORE MOUNTING THE CIRCUIT BREAKER IN AN ELECTRICAL SYSTEM, MAKE SURE THERE IS NO VOLTAGE PRESENT WHERE WORK IS TO BE PERFORMED. SPECIAL ATTENTION SHOULD BE PAID TO REVERSE FEED APPLICATIONS TO ENSURE NO VOLTAGE IS PRESENT.

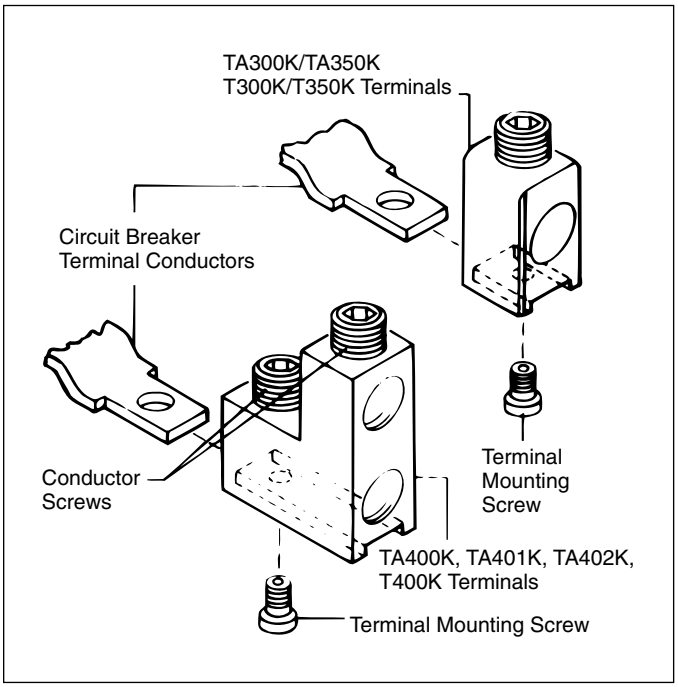

Figure 2-4 Terminal Installation

NOTICE

Depending on the equipment configuration, the circuit breaker can be mounted using different styles of hardware. The following steps describe how to mount the circuit breaker using standard hardware. When special hardware is needed (for example, with the electrical operator), the instruction leaflet describing the accessory also describes the special mounting arrangements.

2-6. To mount the circuit breaker, perform the following steps:

a. For individual surface mounting, drill mounting panel using the drilling plan shown in Figure **2-5**. For panelboard mounting, only load end support mounting

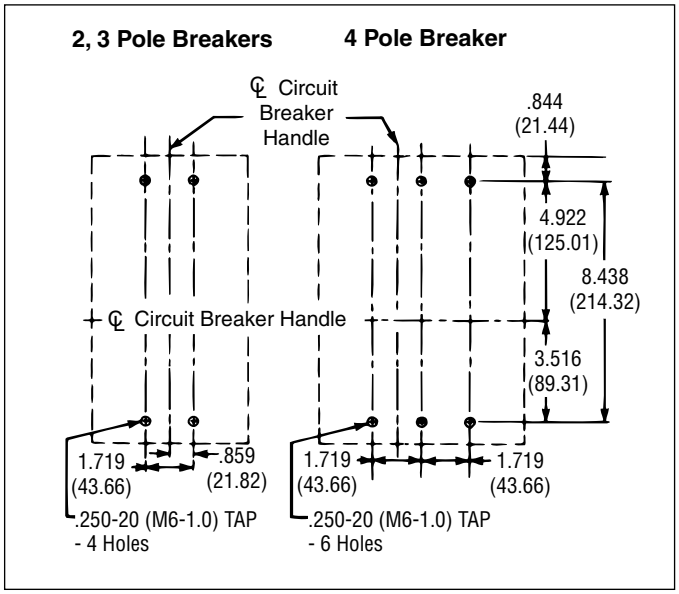

Figure 2-5 Circuit Breaker Mounting Bolt Drilling Plans

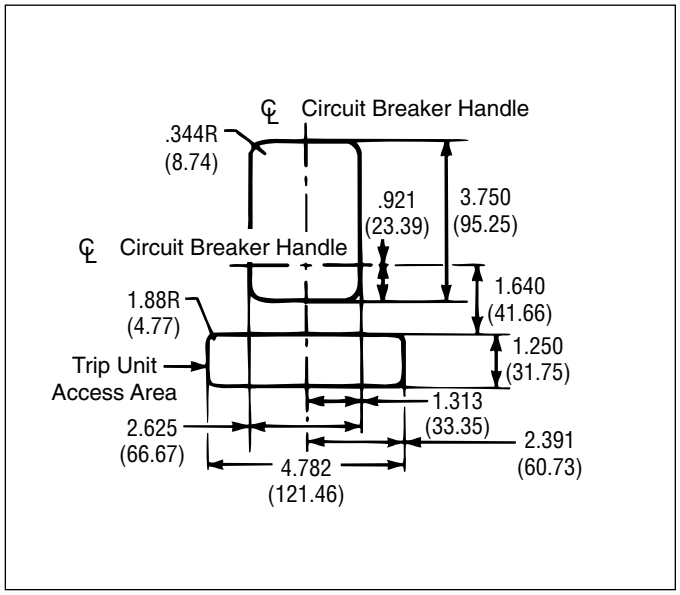

Figure 2-6 Circuit Breaker Escutcheon Dimensions for 3- and 4-Pole Circuit Breakers

holes are required. For deadfront cover applications, cut out cover to correct escutcheon dimensions, see Figure **2-6**.

b. If circuit breaker includes factory or field installed internal accessories, make sure accessory wiring can be reached when the circuit breaker is mounted.

c. Position circuit breaker on mounting surface.

NOTICE

Labels with accessory connection schematic diagrams are provided on the side of the circuit breaker. A note should be made of the diagrams if the labels cannot be seen when the circuit breaker is mounted.

d. Install circuit breaker mounting screws, washers, and nuts. Tighten screws firmly, but do not exceed 28 pounds-inches (3 N.m.).

CAUTION

WHEN ALUMINUM CONDUCTORS ARE USED, THE APPLICATION OF A SUITABLE JOINT COMPOUND IS RECOMMENDED TO REDUCE THE POSSIBILITY OF TERMINAL OVERHEATING. OVERHEATING CAN CAUSE NUISANCE TRIPPING AND DAMAGE TO THE CIRCUIT BREAKER.

NOTICE

When a dual conductor terminal (Catalog No. TA401K, TA400K, or T400K) is installed on the circuit breaker and a single conductor is used, the conductor should be installed in the terminal opening nearest to the circuit breaker terminal mounting conductor.

2-7. Connect line and load conductors and accessory leads.

2-8. When step-type terminals (Cat. No. TA400K, TA401K, TA402K, and T400K) are used, terminal shields (supplied with the terminals) must be installed on the circuit breaker (Figure **2-3**). Warning label supplied with the kit must be attached to the circuit breaker front cover.

2-9. If required, install terminal shield on circuit breaker cover with mounting screws provided.

2-10. After the circuit breaker is installed, check all mounting hardware and terminal connecting hardware for correct torque loading. Torque values for line/load

Table 2-1 Terminal Types

Terminal Cat. No.	Terminal Material Body	Screw Head Type	AWG Wire Range	Metric Wire Range	Wire Type	Torque Value lb-in (N.m.)
TA300K	Aluminum	Socket	3-350(1)	35-185	Cu/Al	275 (31)
TA350K	Aluminum	Socket	250-500(1)	120-240	Cu/Al	375 (42)
TA400K	Aluminum	Socket	3/0-250(2)	95-120(2)	Cu/Al	275 (31)
TA401K	Aluminum	Socket	250(2)	120(2)	Cu/Al	275 & 375
			or	or		(31 &42)
			500(1)	240(1)	Cu/Al	375 (42)
TA402K	Aluminum	Socket	500-750(1)	240-300	Cu/Al	550 (62)
T300K	Copper	Socket	3-350(1)	35-185	Cu Only	275 (31)
T350K	Copper	Socket	250-500(1)	120-240	Cu Only	375 (42)
T400K	Copper	Socket	3/0-250(2)	95-120(2)	Cu Only	275 (31)

terminals are given in Table **2-1** and on the circuit breaker nameplate.

3. REPLACEMENT OF EXISTING CUTLER-HAMMER CIRCUIT BREAKERS TYPES DA, JA, KA, HKA, LB, LBB, AND HLB

Although the physical size of the K-frame Series C circuit breakers is the same as the DA, JA, KA, HKA, LB, LBB, and HLB family, there are certain differences that must be considered when making replacements.

- Circuit breaker mounting details, panel cutouts, and terminal centerline locations are identical.
- Handle locations, handle throw, and terminal connection details are different. Therefore, existing handle mechanisms and externally-mounted accessories, including electrical operator, key interlocks, etc., must be replaced or mounting details modified. Consult Cutler-Hammer for additional information.

WARNING

DO NOT ATTEMPT TO INSTALL OR PERFORM MAINTENANCE ON EQUIPMENT WHILE IT IS ENERGIZED. DEATH, SEVERE PERSONAL INJURY, OR SUBSTANTIAL PROPERTY DAMAGE CAN RESULT FROM CONTACT WITH ENERGIZED EQUIPMENT. ALWAYS VERIFY THAT NO VOLTAGE IS PRESENT BEFORE PROCEEDING WITH THE TASK, AND ALWAYS FOLLOW GENERALLY ACCEPTED SAFETY PROCEDURES.

NOTICE

When replacing an existing circuit breaker of the types listed above, make sure the voltage, continuous current, and interrupting rating of the new circuit breaker is suitable.

3-1. If existing circuit breaker is equipped with a handle mechanism, remove the mechanism. Refer to Frame Book 29-103 for ordering information on new handle mechanisms.

3-2. Disconnect accessory electrical leads and main conductors.

3-3. Remove all external accessories that would impede removal of the circuit breaker.

3-4. Remove circuit breaker from installation.

3-5. Install K-Frame Series C circuit breaker that has been prepared using steps 2-1 through 2-3 to fit installation requirements given below.

Panelboard Installation

Two types of panelboard construction/circuit breaker mounting arrangements are covered in the following procedures: convertible distribution panels (CDP), where the circuit breakers are mounted in a dual horizontal arrangement; and other panelboard constructions, where the existing circuit breaker is used as a main disconnect and mounted vertically.

CAUTION

TO AVOID OVERHEATING, DO NOT INSTALL K-FRAME SERIES C CIRCUIT BREAKERS WITH TRIP UNITS RATED ABOVE 225A ON EXISTING 225A JA, KA, OR HKA PANELBOARD CONNECTING STRAPS.

NOTICE

When existing CDP panelboard connecting straps are retained, a supplementary adapter and clip (Catalog No. TAD3) must be used to compensate for the change in height of the new circuit breaker terminal connections. The adapter may be used on either

side of the circuit breaker terminal mounting conductor permitting continued use of top or bottom mounted connecting straps. If Series C panelboard connecting straps that mount from the rear of the circuit breaker are used, the adapter is not required.

3-6. When required, position the TAD3 adapter under those circuit breaker terminal connectors that will be bolted to the panelboard connecting straps. Secure adapters with the spring clips supplied. Refer to instructions supplied with adapter.

3-7. Position circuit breaker in correct location on panelboard chassis.

3-8. Install socket-head bolts through circuit breaker terminal connectors and screw into panelboard connecting straps. Torque to 120 pound-inches (16.9 N.m).

3-9. Install circuit breaker mounting screws, washers, and nuts in load end of circuit breaker. Tighten screws firmly, but do not exceed 28 pound-inches (3 N.m.).

3-10. After mounting the circuit breaker, refer to section 2 for instructions how to connect main conductors and accessory leads, as required.

Individually Mounted Devices

With the change in height of the circuit breaker terminal connector, K-frame Series C circuit breakers can be used to replace individually mounted existing types DA, JA, KA, HKA, LB, LBB, and HLB circuit breakers only when the following conditions are considered:

Fixed Rear Connecting Studs

New Series C fixed rear connecting studs will be required. Refer to Frame Book 29-103 for ordering information.

Plug-In Support Blocks

New male plug-in adapters will be required. Existing stationary support block receptacles can be used with new Series C male plug-in adapters. Refer to Frame Book 29-103 for ordering information.

Front or Rear Connected Bus Bars

Use existing connecting details coupled with K-Frame terminal adapter kit (Catalog No. TAD3).

4. MANUAL OPERATION, AND THERMAL-MAGNETIC TRIP UNIT ADJUSTMENT

Manual Operation

Manual operation of the circuit breaker is controlled by the circuit breaker handle and the PUSH-TO-TRIP button in the trip unit. The circuit breaker handle has three positions, two of which are shown on the cover with raised lettering to indicate ON and OFF. On the sliding handle barrier, ON, OFF, and trip are also shown by a color-coded strip for each circuit breaker handle position: red for ON, white for tripped, and green for OFF. (See Figure **4-1**.)

Circuit Breaker Reset

After an automatic or accessory initiated trip, or a manual PUSH-TO-TRIP operation, the circuit breaker is reset by moving the circuit breaker handle to the extreme OFF position.

NOTICE

In the event of a thermal trip in a thermal magnetic type trip unit, the circuit breaker cannot be reset until the thermal element in the trip unit cools. A circuit breaker with an electronic type trip unit can be reset immediately.

No circuit breaker should be reclosed until the cause of trip is known and the situation rectified.

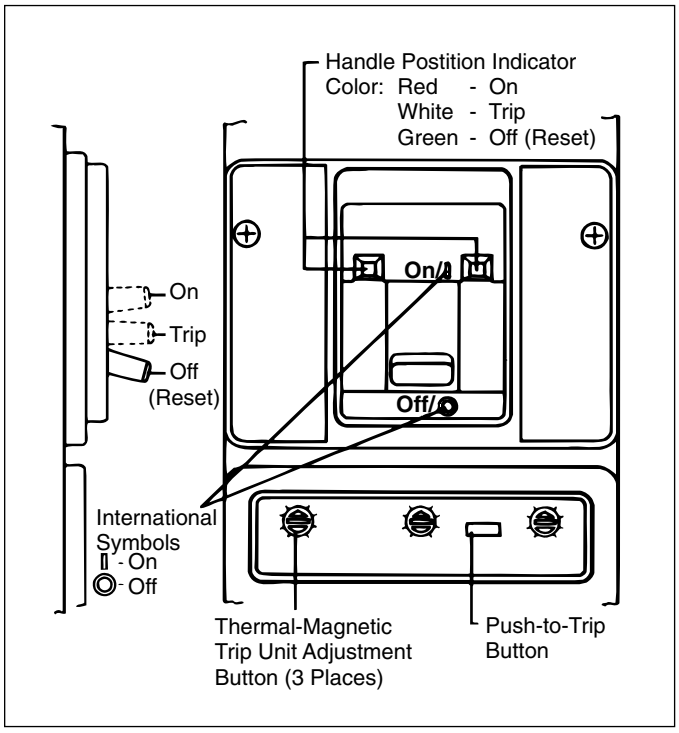

Figure 4-1 Circuit Breaker Manual Controls

PUSH-TO-TRIP Button

The PUSH-TO-TRIP button checks the circuit breaker tripping function and is used to periodically exercise the operating mechanism in thermal-magnetic trip units. The button is designed to be operated by a small screwdriver. The rating plug in Seltronic trip units is the PUSH-TO-TRIP button and is operated by finger pressure. There is no PUSH-TO-TRIP button in the molded case switch.

Thermal-Magnetic Trip Unit Adjustment

The magnetic element of each pole of the trip unit can be adjusted by rotating the adjustment buttons on the front face of the trip unit with a screwdriver. The buttons have several settings as indicated on the nameplate with values in multiples of the trip unit ampere rating (I_{th}) as shown in Figure **4-2**. To adjust the setting, rotate each button clockwise until arrow button points to desired setting.

Interchangeable Trip Units

For additional information on thermal-magnetic trip units, refer to I.L. 29C603, and for electronic (Seltronic) trip units, refer to I.L. 29C604. (IL supplied with trip unit.)

5. INSPECTION AND FIELD TESTING

Series C molded case circuit breakers are designed to provide years of almost maintenance-free operation. The following procedure describes how to inspect and test a circuit breaker in service.

Inspection and Field Testing

Circuit breakers in service should be inspected periodically. The inspection should include the following checks 5-1 through 5-8.

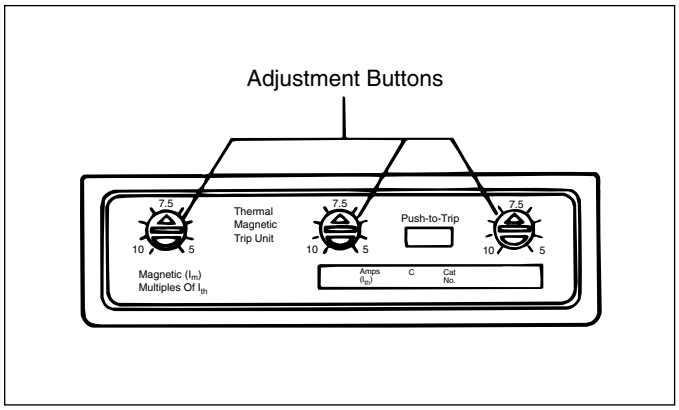

Figure 4-2 Trip Unit Magnetic Adjustment Buttons

WARNING

THE VOLTAGES IN ENERGIZED EQUIPMENT CAN CAUSE DEATH OR SEVERE PERSONAL INJURY. BEFORE INSPECTING THE CIRCUIT BREAKER IN AN ELECTRICAL SYSTEM, MAKE SURE THERE IS NO VOLTAGE PRESENT WHERE WORK IS TO BE PERFORMED. SPECIAL ATTENTION SHOULD BE PAID TO REVERSE FEED APPLICATIONS TO ENSURE NO VOLTAGE IS PRESENT.

CAUTION

SOME COMMERCIAL CLEANING AGENTS WILL DAMAGE THE NAMEPLATES OR MOLDED PARTS. MAKE SURE THAT CLEANING AGENTS OR SOLVENTS USED TO CLEAN THE CIRCUIT BREAKER ARE SUITABLE FOR THE JOB.

5-1. Remove dust, dirt, soot, grease, or moisture from the surface of the circuit breaker using a lint-free dry cloth, brush, or vacuum cleaner. Do not blow debris into circuit breaker. If contamination is found, look for the source and eliminate the problem.

5-2. Switch circuit breaker to ON and OFF several times to be sure that the mechanical linkages are free and do not bind. If mechanical linkages are not free, replace circuit breaker.

NOTICE

On molded case switches, there is no PUSH-TO TRIP feature. Omit step 5-3 when installing a molded case switch and proceed with step 5-4.

5-3. With the circuit breaker in the ON position, press the PUSH-TO-TRIP button to mechanically trip the circuit breaker. Trip, reset, and switch circuit breaker ON several times. If mechanism does not reset each time the circuit breaker is tripped, replace the circuit breaker.

5-4. Check base, cover, and operating handle for cracks, chipping, and discoloration. Circuit breakers should be replaced if cracks or severe discoloration is found.

5-5. Check terminals and connectors for looseness or signs of overheating. Overheating will show as discoloration, melting, or blistering of conductor insulation, or

as pitting or melting of conductor surfaces due to arcing. If there is no evidence of overheating or looseness, do not disturb or tighten the connections. If there is evidence of overheating, terminations should be cleaned or replaced. Before re-energizing the circuit breaker, all terminations and cable should be refurbished to the condition when originally installed.

5-6. Check circuit breaker mounting hardware, and tighten if necessary.

5-7. Check area where circuit breaker is installed for any safety hazards, including personal safety and fire hazards. Exposure to certain types of chemicals can cause deterioration of electrical connections.

5-8. The operation of circuit breakers with Seltronic trip units can be field tested periodically using the Seltronic test kit. (See Frame Book 29-103.)

Field Testing

Any field testing should be done in accordance with applicable NEMA Standard.

Table 4-1 Available Trip Unit Ratings

Circuit Breaker Types	Trip Unit Types					
	Thermal-Magnetic Amperes I_{th}			Electronic (Seltronic①) Amperes I_{th}		
	Fixed Thermal	Adjustable Thermal②	Adjustable Magnetic Multiples of I_{th}③	Fixed Rating Plug	Adjustable Rating Plug	Adjustable Instantaneous/ Short-time Multiples of I_{th}③
DK	250 300 350 400		5 to 10			
KDB, KD, HKD, KDC	100 125 150 175			200 225 250 300 350 400	200-400 250-400 315-400	2 to 8
KW, HKW, KWC②	200 225 250 300 350 400	160-200 200-250 250-315 313-400				

① Not available with types DK or KDB
② Not UL listed
③ For adjustable thermal trip units, the magnetic setting is a multiple of the maximum thermal setting. For Seltronic trip units, the instantaneous/short time setting is a multiple of the rating plug rating.

DANGER

Hazard of Electric Shock, Burn or Explosion

- This equipment must be installed and serviced only by qualified electrical personnel in accordance with National and Local Electrical Codes.
- Turn off all power supplying this equipment before working on or inside equipment.
- Always use a properly rated voltage-sensing device to confirm power is off.
- Replace all devices, doors and covers before restoring power to this equipment.
- Do not apply petroleum-based products to non-metallic parts.

Improper installation or misapplication of these devices may result in serious injury to the installer and/or damage to electrical system or related equipment. Protective eyewear and clothing should be worn whenever working around hazardous voltages.

Failure to follow these instructions could result in serious injury or death.

CAUTION

- Do not attempt to open or tamper the Surge Trap device in any way as this may compromise performance and will void the warranty.
- Megger and hi-potential tests may damage the device. Disconnect all power supplying the equipment and isolate the Surge Trap device before testing.
- Install for point-of-use. Surge Trap can be used for Type 2 or 3 / Class II or III applications according to IEC 61643-1.
- Prior to installation, confirm that the Surge Trap is rated for the correct voltage, current and frequency equivalent to the application.
- Surge Trap must be installed within an enclosure or control cabinet.
- Operating and storage temperature of this device must be within -25°C and +60°C.

Installation Instructions

1. Mounting

Surge Trap is designed to mount onto a 35mm DIN rail or top-hat rail (standard EN 50022, BS 5584) set in the horizontal position. To install, first hook the line side over the 35mm DIN rail and then push in the load side until the blue spring loaded mounting clip “clicks” onto the rail with the Surge Trap label text shown in the upright position reading left to right (See Figure 1).

2. Replacement / Removal

If the blown indicator tab is visible on any of the multiple pole units, then the entire unit has reached the end of its life and must be replaced. To remove, push up on the unit and rock the top off the 35mm DIN rail.

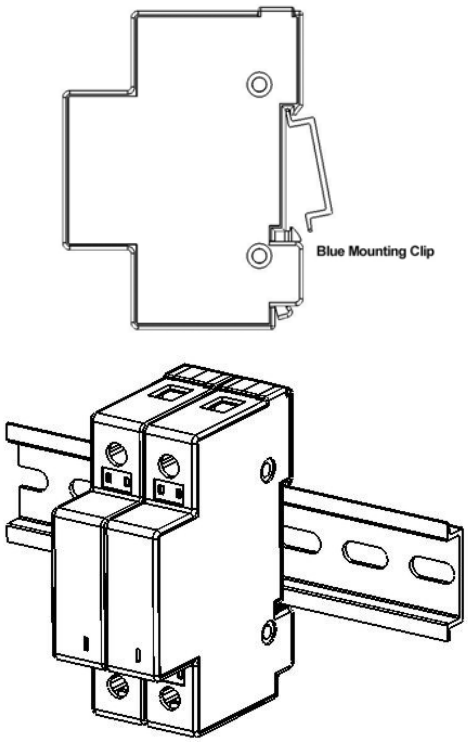

Figure 1

3. Wire Installation

#6 – #14 AWG wire may be used. Maximum torque to be applied to terminal screws is 14.75 in-lb. Strip back wire insulation 8mm (5/16”).

Interconnecting wire should be no longer than 500mm (20”) in total length. Wire bending radius should be > 100mm (4”). Do not loop or twist interconnecting wire. Failure to meet these requirements will result in higher let-through voltages.

Surge Trap is installed in parallel with the load or the electrical system wiring.

Determine electrical voltage configuration and proper modes of protection and install wiring as shown in Figure 2.

4. Auxiliary Micro-Switch Installation

Remote signaling is available on all Surge Trap products that specify a remote indicator. #16 – #30 AWG signal wire may be used. Maximum torque rating for the terminal screw is 1.80 in-lb. The maximum continuous current rating for the remote indicator is 3A.

If applicable, install signal wiring as shown in Figure 3.

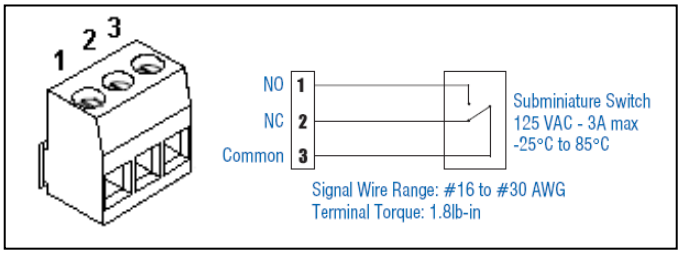

Figure 3

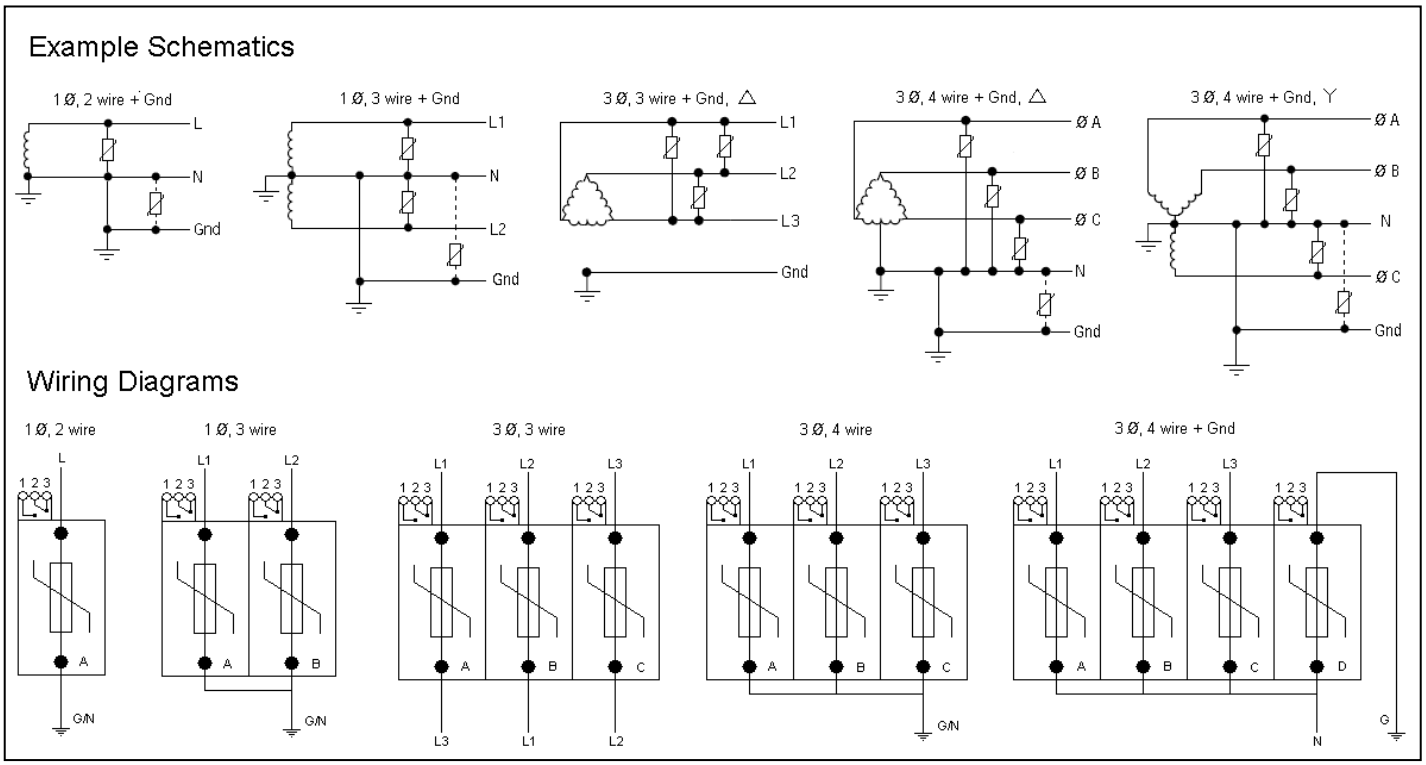

Figure 2

NOTE: SURGE TRAP DOES NOT REQUIRE ANY ADDITIONAL OVERCURRENT PROTECTION NO ADDITIONAL FUSING REQUIRED

Ferraz Shawmut, Inc. Surge Trap meets all requirements set forth by UL 1449 Third Edition. Reference UL file number E210793.

RoHS

Ferraz Shawmut
374 Merrimac Street • Newburyport, MA 01950-1998
Phone: 978-462-6662 • Fax: 978-462-0181 • us.ferrazshawmut.com

MotorSaver®
THREE-PHASE ELECTRIC MOTOR PROTECTOR

INSTALLATION INSTRUCTIONS FOR SYMCOM'S MOTORSAVER®

MODEL 460

DANGER!

HAZARDOUS VOLTAGES MAY BE PRESENT DURING INSTALLATION.
Electrical shock can cause death or serious injury.
Installation should be done by qualified personnel following all national, state and local electrical codes.

BE SURE POWER IS DISCONNECTED PRIOR TO INSALLATION!
FOLLOW NATIONAL, STATE, AND LOCAL CODES!
READ THESE INSTRUCTIONS ENTIRELY BEFORE INSTALLATION!

! WARNING !

UNEXPECTED OUTPUT ACTUATION CAN OCCUR.
Use hard-wired safety interlocks where personnel and/or equipment hazards exist.
Failure to follow this instruction can result in death, injury or equipment damage.

The Model 460 MotorSaver® is an auto ranging voltage monitor designed to protect three-phase motors regardless of size. The MotorSaver® is used on 190-480 VAC, 50 to 60 Hz motors to protect from damage caused by single phasing, low voltage, high voltage, phase reversal, and voltage unbalance.

CONNECTIONS

1. Mount the MotorSaver® in a convenient location in or near the motor control panel. If the location is wet or dusty, the MotorSaver® should be mounted in a NEMA 4 or 12 enclosure. The MotorSaver® can be mounted to a back panel using two #6 or #8 x 5/8 screws or can be snapped onto a DIN rail.
2. Connect L1, L2 and L3 on the MotorSaver's terminal strip to the LINE SIDE of the motor starter. (See Figure No. 1).
3. Connect the output relay to the circuitry to be controlled. For motor control, connect the normally open contact in series with the magnetic coil of the motor starter as shown in Figure No. 1. For alarm operation, connect the normally closed contact in series with the control circuit as shown in Figure No. 2.

SymCom Inc
Motor Protection & Controls Since 1974
2880 North Plaza Drive, Rapid City, SD 57702 • (800) 843-8848

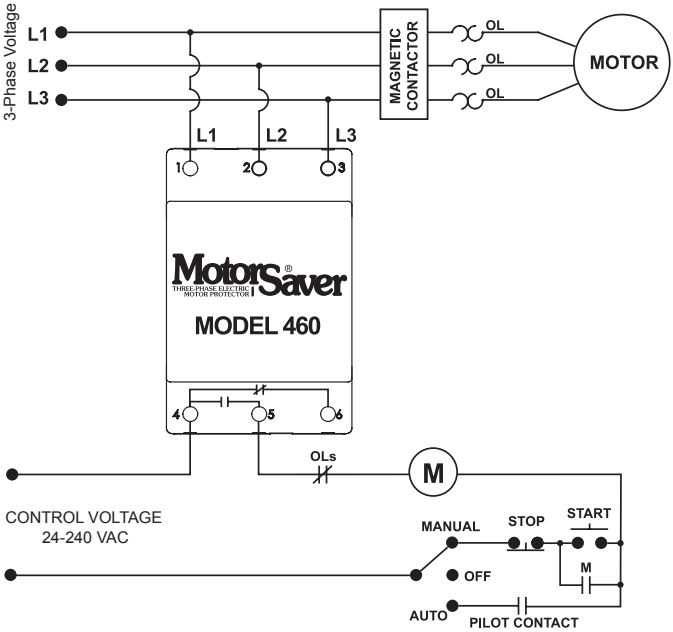

FIGURE NO. 1: CONTROL WIRING DIAGRAM

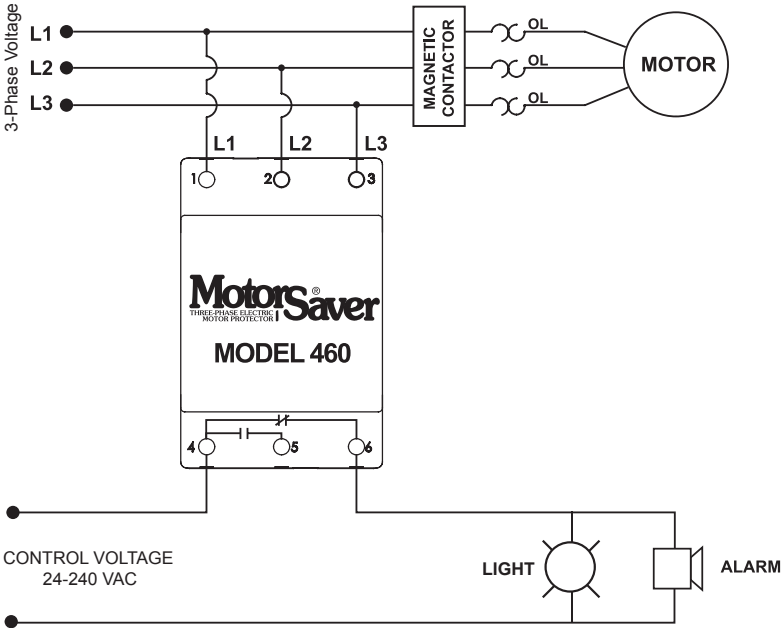

FIGURE NO. 2: ALARM WIRING DIAGRAM

SETTINGS

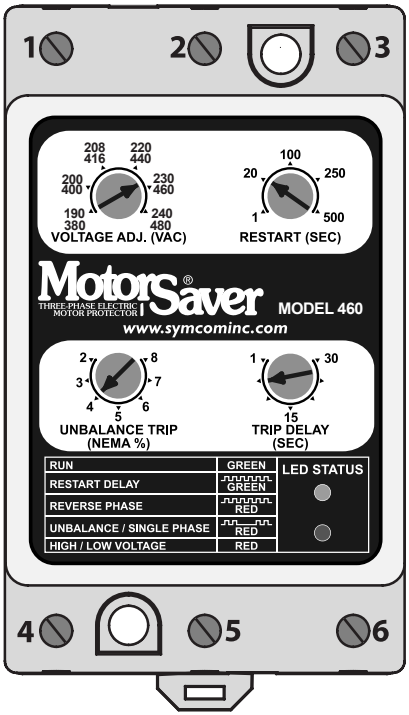

1. Line voltage adjustment: Rotate the **"VOLTAGE ADJ. (VAC)"** to the nominal three-phase line voltage feeding the motor to be protected.
2. Restart delay adjustment: Rotate the **"RESTART (SEC)"** adjustment to the desired position. The restart delay is the time between MotorSaver® seeing acceptable voltage and the MotorSaver® closing its output contacts. For compressor applications, the restart delay should be set for the approximate time it takes for the head pressure to bleed off of the compressor. For other applications, the restart delay is typically set between 2 and 10 seconds.
3. Trip delay adjustment: Rotate the **"TRIP DELAY (SEC)"** adjustment to the desired setting. This adjustment does not affect the trip delay on phasing faults. Typically, the trip delay adjustment is set between 1 and 5 seconds. In areas where voltage fluctuations are frequent, the trip delay adjustment may be set greater than 10 seconds.
4. Voltage unbalance adjustment: Rotate the **"UNBALANCE TRIP (NEMA%)"** adjustment to the desired unbalance trip level. The NEMA MG1 standard does not recommend operating a motor above 1% voltage unbalance without derating the motor. The NEMA MG1 standard also recommends against operating a motor above a 5% voltage unbalance under any circumstances. SymCom recommends consulting the motor manufacturer for specific tolerances.

$$\text{Percent Unbalance} = \frac{\text{Maximum Deviation from the Average}}{\text{Average}} \times 100$$

Example: The measured line-to-line voltages are 203, 210, and 212.

$$\text{Average} = \frac{203 + 210 + 212}{3} = 208.3$$

The maximum deviation from the average is the largest difference between the average voltage (208.3) and any one voltage reading.

208.3 - 203 = 5.3 210 - 208.3 = 1.7 212 - 208.3 = 3.7

The maximum deviation from the average is 5.3.

$$\frac{5.3}{208.3} \times 100 = 2.5\% \text{ Unbalance}$$

POWER-UP

Turn on the 3∅ power to the motor. The MotorSaver's green RUN light will blink during the RESTART delay. After the RESTART delay, the MotorSaver® will energize its output contacts and the green RUN light will illuminate. If the contacts do not energize and the RUN light does not illuminate, see the TROUBLESHOOTING section.

DIAGNOSTIC INDICATOR LIGHTS	
RUN	GREEN
RESTART DELAY	GREEN
REVERSE PHASE	RED
UNBALANCE / SINGLE PHASE	RED
HIGH / LOW VOLTAGE	RED

CONGRATULATIONS!!
YOU HAVE JUST INSTALLED THE FINEST MOTOR PROTECTION AVAILABLE!!

TROUBLESHOOTING

SYMPTOM	LIGHT PATTERN	SOLUTION
No lights are on. The unit seems completely dead.	N / A	Measure the three line-to-line voltages. If any of the voltages are below 150 VAC, the MotorSaver® does not have enough power to operate its internal electronics. This may occur on a single-phased system. If the voltages are correct, call SymCom at 1-800-843-8848 or 1-605-348-5580.
Red light is blinking (on initial power up).	RED	Turn off the three-phase power. Swap any two leads powering the MotorSaver® (L1, L2, or L3). There is a 50-50 chance of connecting L1, L2, and L3 correctly the first time. Re-apply the three-phase power.
Red light is blinking (after the motor has been previously running).	RED	The incoming lines have been reverse phased. The MotorSaver® is preventing the motor from running backwards. Correct the phase sequence.
Red light is blinking in this pattern.	RED	The voltage is unbalanced or single-phased. Measure the incoming line voltages and calculate the % unbalance. If the voltage unbalance does not exceed the % unbalance reset value, call SymCom at 1-800-843-8848 or 1-605-348-5580.
Red light is on steady.	RED	The voltage is out of tolerance. Measure the three line-to-line voltages. Calculate the average of the three voltages. If the average is 7% above or below the nominal voltage as selected by the LINE VOLTAGE ADJUST, the MotorSaver® is functioning properly. If the voltage is within ±7% of the selected line voltage, call SymCom at 1-800-843-8848 or 1-605-348-5580.
Green light blinks and motor is not running.	GREEN	The MotorSaver® is in restart delay.
Green light is on steady, but motor does not start.	GREEN	The MotorSaver® is in run mode. Ensure other control devices are allowing the motor to start. Check control circuit for loose wires or malfunctioning switches.

Any questions or comments call SymCom at 1-800-843-8848 or 1-605-348-5580

SPECIFICATIONS

3 - Phase Line Voltage	190 - 480 VAC
Frequency	50* - 60 Hz
Low Voltage (% of setpoint)	
Trip	90% ± 1%
Reset	93% ± 1%
High Voltage (% of setpoint)	
Trip	110% ±1%
Reset	107% ±1%
Voltage Unbalance (NEMA)	
Trip	2 - 8% Adjustable
Reset	Trip Setting minus 1% (5 - 8%)
	Trip Setting minus 0.5% (2 - 4%)
Trip Delay Time	
Low, High, and Unbalanced Voltage	1 - 30 Seconds Adjustable
Single-phasing faults (>25% UB)	1 Second Fixed
Restart Delay Time	
After a fault or complete power loss	1 - 500 Seconds Adjustable
Output Contact Rating - SPDT	
Pilot Duty	480 VA @ 240 VAC
General Purpose	10 A @ 240 VAC
Power Consumption	6 Watts (maximum)
Weight	14 oz
Enclosure	Polycarbonate
Terminal	
Torque	6 Inch-Pounds Max.
Wire AWG	12 - 20 AWG
Safety Marks	
UL	UL508 (File # E68520)
CE	IEC 60947-6-2
Standards Passed	
Electrostatic Discharge (ESD)	IEC 1000-4-2, Level 3, 6 kv contact, 8 kv air
Radio Frequency Immunity, Radiated	159 MHz, 10 V/m
Fast Transient Burst	IEC 1000-4-4, Level 3, 3.5 kv input power and controls

*NOTE: 50 Hz will increase all delay timers by 20%

Surge	
IEC	IEC 1000-4-5, Level 3, 4kv line-to-line; Level 4, 4kv line-to-ground
ANSI / IEEE	C62.41 Surge and Ring Wave Compliance to a level of 6kv line-to-line
Hi-potential Test	Meets UL508 (2 x rated V +1000V for 1 minute)
Environmental	
Temperature Range	Ambient Operating: -20° - 70° C (-4° - 158°F) Ambient Storage: -40° - 80° C (-40° - 176°F)
Class of Protection	IP20, NEMA 1 (Finger Safe)
Relative Humidity	10-95%, non-condensing per IEC 68-2-3

DIMENSIONS

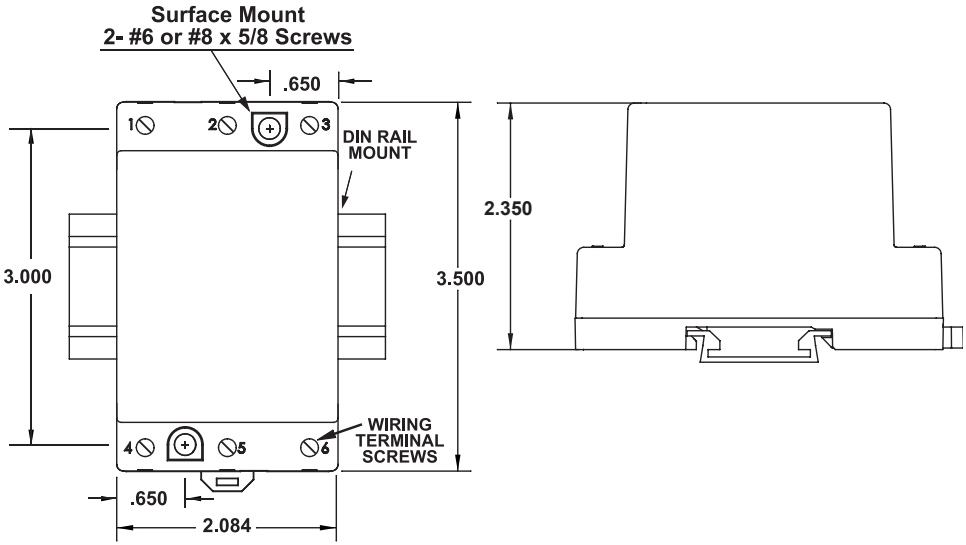

SymCom warrants its microcontroller based products against defects in material or workmanship for a period of five (5) years* from the date of manufacture. All other products manufactured by SymCom shall be warranted against defects in material and workmanship for a period of two (2) years from the date of manufacture. For complete information on warranty, liability, terms, and conditions, please refer to the SymCom Terms and Conditions of Sale document.

Visit our website at www.symcominc.com for our complete catalog and new product listings!

SymCom Inc
Motor Protection & Controls Since 1974

2880 North Plaza Drive, Rapid City, SD 57702
Phone: (800) 843-8848 or (605) 348-5580
FAX: (605) 348-5685

SOLAHD

Uninterruptible Power Systems

SDU Series

500, 850, 500-5, 850-5

Instruction Manual

While every precaution has been taken to ensure accuracy and completeness in this manual, SolaHD assumes no responsibility, and disclaims all liability for damages resulting from use of this information or for any errors or omissions.

©2008 SolaHD. All rights reserved throughout the world. Specifications are subject to change without notice.

®SolaHD name and logo are registered trademarks of EGS Electrical Group, LLC. All names referred to are trademarks or registered trademarks of their respective owners.

Aunque se han tomado todas las precauciones para asegurar la exactitud y acuciosidad de este manual, SolaHD no asume responsabilidad alguna, y rechaza toda responsabilidad por daños que pudieran resultar debido al uso de esta información o por cualquier error u omisión.

©2008 SolaHD. Todos los derechos reservados en el mundo entero. Las especificaciones pueden cambiar sin previo aviso.

El nombre y el logotipo de ®SolaHD son marcas registradas de EGS Electrical Group, LLC. Todos los nombre mencionados son marcas comerciales o registradas de sus respectivos titulares.

Bien que toutes les précautions aient été prises afin d'assurer que les renseignements du présent manuel sont complets et exacts, Sola/Hevi-Duty n'assume aucune responsabilité, et décline toute responsabilité pour des dommages découlant de l'utilisation de cette information ou de toute erreur ou omission.

©2008 SolaHD Tous droits réservés mondialement. Les caractéristiques techniques sont sujettes à modification sans préavis.

Le nom et le logo ®SolaHD sont des marques déposées de EGS Electrical Group, LLC. Tous les noms évoqués sont des marques de commerce ou des marques déposées de leurs propriétaires respectifs.

Table of Contents/Índice/Table des matières

English

1.0 Important Safety Instructions 4–5
2.0 Warnings Defined 5
3.0 Introduction 6
4.0 System Description 7–8
5.0 Installation Instructions 9
6.0 Operating Instructions 9–10
7.0 Battery Overload Alarms 10
8.0 PIN-Out Configuration for DB9 Connector 11
9.0 Battery Backup Times 11
10.0 Troubleshooting 12
11.0 Storage 12
12.0 Specifications 13
13.0 Conditions for Safe Use of SDU 500 & 850 14–15
14.0 Product Registration & Warranty Information 15

Español

1.0 Instrucciones importantes de seguridad 16–17
2.0 Definición de advertencias 17
3.0 Introducción 18
4.0 Descripción de sistema 19–20
5.0 Instrucciones de instalación 21
6.0 Instrucciones de operación 21–22
7.0 Tiempo de autonomía de la batería (Alarma) 23
8.0 Configuración de disposición de las clavijas del conector DB9 23
9.0 Tiempo de reserva de la batería 24
10.0 Almacenamiento 24
11.0 Solución de problemas 25
12.0 Especificaciones 26
13.0 Registro del Producto y Información sobre la Garantía 27

Français

1.0 Instructions importantes sur la sécurité 28–29
2.0 Définition des avertissements 29
3.0 Introduction 30
4.0 Description du système 31–32
5.0 Instructions d'installation 33
6.0 Instructions d'utilisation 33–34
7.0 Alarmes de la batterie de secours 35
8.0 Configuration des broches de sortie du connecteur DB9 35
9.0 Temps de secours de batterie 36
10.0 Entreposage 36
11.0 Dépannage 37
12.0 Spécifications 38
13.0 Enregistrement du produit et information sur la garantie 39

1.0 Important Safety Instructions

This manual contains important safety instructions that should be followed during the installation of the Uninterruptible Power System (UPS). Please read all safety, installation, and operating instructions before attempting to install or operate the UPS. Please adhere to all warnings on the unit and in this manual during installation and operation.

The UPS is designed for Industrial or Commercial use and can be installed and operated by individuals without previous training.

1.1 Safety Precautions—Warnings

- To prevent the risk of fire or electric shock, install the UPS in a temperature and humidity controlled ventilated enclosure, free of conductive contaminants, moisture, flammable liquids, gases, and corrosive substances.

- Operate the UPS only from a properly grounded (earthed) ac supply.
- To reduce the risk of electric shock, do not remove the cover, as it has no user-serviceable parts inside. Some components are live, even when ac power is disconnected. For service, contact a qualified technician.

Although your UPS has been designed and manufactured to assure personal safety, improper use can result in electrical shock or fire. To ensure safety, please observe the following rules:

- Turn OFF UPS and disconnect the ac supply before cleaning. Do not use liquid or aerosol cleaners. A dry cloth is recommended to remove dust from the surface of your UPS.
- Do not install or operate the UPS in or near water.
- Do not place the UPS on an unstable cart, stand, or table.
- Do not place the UPS under direct sunlight or close to heat-emitting sources.
- To allow proper ventilation of the UPS, do not block or cover the top and bottom sides of the unit.
- Never block or insert any objects into the ventilation holes or other openings of the UPS. Keep all vents free of dust accumulation that could restrict airflow.

- Follow all warnings and instructions marked on the UPS. Do not attempt to service the UPS, as it has no user-serviceable parts inside. Refer all repairs to qualified service personnel.
- Do not dispose of batteries in a fire; they may explode.
- Do not open or damage the battery. Released electrolyte is harmful to the skin and eyes and may be toxic.

If your UPS demonstrates any of the following conditions, turn OFF the UPS, disconnect the ac supply and contact your local distributor, SolaHD representative or SolaHD Technical Support at 1-800-377-4384.

- Liquid has been spilled on the UPS.
- The circuit breaker opens frequently.
- The UPS does not operate in accordance with the user manual.

1.2 Conditions of Use

Your UPS provides conditioned power to connected equipment. The maximum load must not exceed that shown on UPS rating label. If uncertain, contact your distributor or SolaHD Technical Support at 1-800-377-4384.

U.S. Only: For Conditions of Acceptability in accordance with UL 508A, see “13.0 Conditions for Safe Use of SDU 500 & 850”.

2.0 Warnings Defined

⚠ DANGER **Danger:** Indicates an imminently hazardous situation that, if not avoided, will result in death or serious injury. This signal word is limited to the most extreme situations.

⚠ WARNING **Warning:** Indicates a potentially hazardous situation that, if not avoided, could result in death or serious injury.

⚠ CAUTION **Caution:** Indicates a potentially hazardous situation that, if not avoided, may result in minor or moderate injury. It may also be used to alert against unsafe practices.

3.0 Introduction

Congratulations on your choice of the SDU Uninterruptible Power System (UPS). The SDU is a compact, “Off-Line” DIN rail mountable UPS, which provides conditioned power to sensitive electronic equipment. It supplies connected equipment with stepped approximation to sinewave power to simulate the power generated by the utility.

The SDU is a powerful, microprocessor-controlled UPS. Input voltage range is 80% to 110% (ideal protection for the critical connected loads). Battery charging occurs automatically when ac power is applied, no need to switch ON the UPS. When power fails, the UPS can be automatically turned OFF, as long as the connected loads are not operating to save the battery energy. The SDU also includes an automatic self-test feature to test the UPS function and battery. If the battery is no longer useful, the unit will sound an alarm and an LED indicator will illuminate.

NOTE: This equipment has been tested and found to comply with the limits for a Class A digital device, pursuant to Part 15 of the FCC Rules. These limits are designed to provide reasonable protection against harmful interference in an industrial installation. This equipment uses, generates and can radiate radio frequency energy and, if not installed and used in accordance with the instructions, may cause harmful interference with radio communications. However, there is no guarantee that interference will not occur in a particular installation. If this equipment does cause harmful interference to radio or television reception, which can be determined by turning the equipment OFF and ON, the user is encouraged to try to correct the interference by one or more of the following measures:

- Reorient or relocate the receiving antenna.
- Increase the separation between the UPS and the receiver.
- Connect the UPS into a circuit different from that which the receiver is connected.
- Consult the dealer or an experienced radio/TV technician for help.

4.0 System Description

4.1 Front Panel

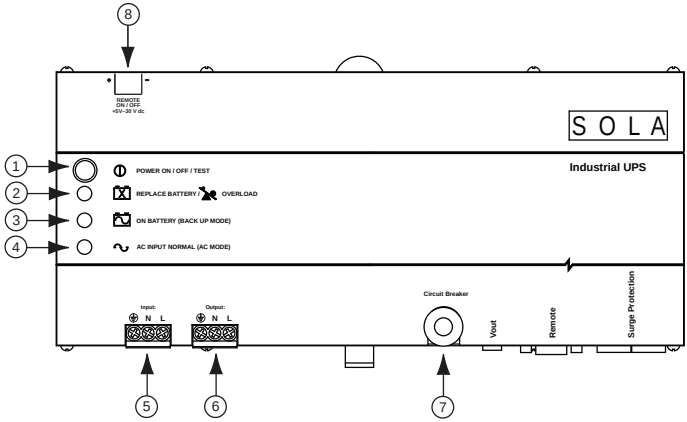

1. **Power ON/OFF/Test Button:** Press the button for more than one second to turn the UPS ON. Press the button for less than one second to activate the self-testing. Press for more than five seconds to turn OFF.
2. **Battery Warning/Overload Indicator (Red LED):** The LED flashes when the battery needs to be recharged and tested. The LED will illuminate when the unit is subjected to an overload condition. If the unit shuts down due to overload, the LED and alarm will continue for two minutes.
3. **ON Battery Indicator (Yellow LED)**: The LED illuminates when the UPS is supplying battery power to the loads.
4. **Ac Input Normal Indicator (Green LED):** The LED illuminates when the line input voltage is normal.
5. **IP20-rated Input Screw Terminals** (see table below)
6. **IP20-rated Output Screw Terminals** (see table below)

Screw	M3.0; Current rating = 30 A, Ac 300 V
Insulation Withstands Volts	Ac 2000 V min.
PCB Hole Diameter	1.8 mm, wire strip length = 8 mm
Wire Range	10–24 AWG
Screw Torque	5.5 lb.-in.

7. **Input Circuit Breaker:** Protection from ac overload and short circuit.
8. **Remote ON/OFF:** The remote switch provides the same functions as the front panel switch including ON/OFF/Test functions with Green Mode enabled or disabled.

4.2 Bottom Panel

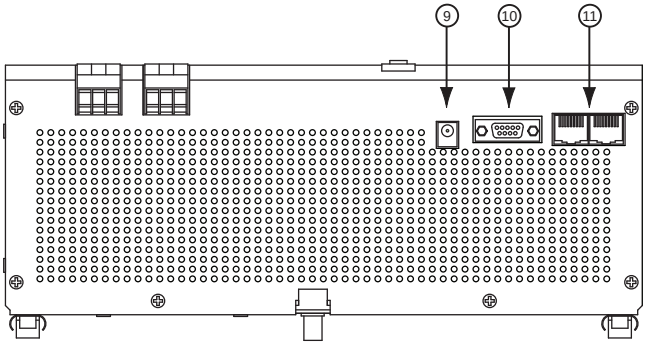

9. **V Output:** Output terminal providing 12 V power source to the optional relay card.
10. **Remote:** RS232 communication port; DB-9 connector.
11. **Tel/Surge Protection:** Data line surge protection for phones (UL497A).

4.3 What's Included

The SDU UPS is shipped with the following items:

- User manual
- UPSMON software CD

  NOTE: Monitoring/diagnostic software is included on the UPSMON CD. The software is compatible with Windows NT and Windows 2000 (including XP operating systems).

- UPSMON DB-9 serial cable
- RJ-11 cord
- Electrical shock warning label

4.4 Accessories

- **UPSMON-USB:** RS232 to USB adapter cable
- **RELAYCARD-SDU:** Dry contact relay box
- **SDU-PMBRK:** Mounting brackets to secure the UPS to the wall, back of the panel or enclosure

5.0 Installation Instructions

1. **Placement:** Install the UPS in a protected area with adequate airflow and free of excessive dust. Do not operate the UPS outdoors.
2. **Connect to Utility:** To power up the UPS, connect the ac input connector to the utility power.
3. **Charge the Battery:** The UPS charges its battery whenever it is connected to utility power. For best results, charge the battery for four hours during initial use.
4. **Connect the Loads:** Connect the loads to the output hardwire connector.
5. **Apply the Electrical Shock Warning Label:** Apply the electrical shock warning label to the panel, in a way that is clearly visible to the user.

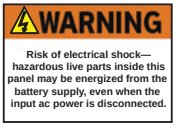

6.0 Operating Instructions

1. **Output Connector:** The output connector will provide protection from surges and power failures to the critical loads.
2. **Switch ON Green Mode Enabled:** After connecting the UPS to the utility power, press the ON button until you hear the first beep, then release the button immediately. The Green Mode is enabled, i.e. if a load less than forty watts (or no load) is connected and the UPS operates in the Backup Mode. The UPS will enter into the Green Mode status after three minutes of backup time; the green light will flash every three to five seconds and after a short period of time; and the unit will enter a “power save” status by shutting down to prevent deep discharge of the battery. To reactivate the unit, power the unit OFF then ON again or reapply utility power.
3. **Switch ON Green Mode Disabled:** After connecting the UPS to the utility power, press the ON button and keep pressing it until you hear two short beeps “Bi-Bip”, then release the button immediately. The Green Mode is now disabled. Any kind of load, whether smaller than forty watts or larger, will not affect the normal operation of the UPS under Ac or Battery Mode.
4. **Switch OFF:** To switch OFF the UPS, press and hold the Power ON/OFF/Test button until the “Ac Power Normal” LED or “ON Battery” LED turns OFF.

5. **Self-test:** Use the self-test to verify both the operation of the UPS and the condition of the battery. In normal utility power, push the Power ON/OFF/Test button for less than one second; the UPS will perform a self-test. During the self-test, the UPS runs in Backup Mode. If the UPS passes the self-test, it returns to “Ac Input Normal” operation.

6. **Remote ON/OFF:** To ensure the remote ON/OFF function, connect a remote push-button switch in series with 5–30 V dc voltage source to the ON/OFF terminal as shown below.

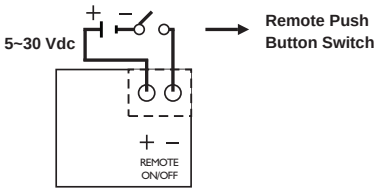

The remote switch provides the same functions as the front panel switch including ON/OFF/Test functions with Green Mode enabled or disabled. If the Green Mode is not needed, a remote toggle switch can be used.

7.0 Battery Overload Alarms

1. **ON Battery (slow beeping):** When in ON Battery Mode, the yellow LED illuminates and the UPS sounds an audible alarm. The alarm stops when the UPS returns to Ac Input Normal operation.

2. **Low Battery (rapid beeping):** In ON Battery Mode when the battery energy runs low, the UPS beeps rapidly until the UPS shuts down from battery exhaustion or returns to Ac Input Normal operation.

3. **Overload (continuous alarm):** When the UPS is overloaded (the connected loads exceed the maximum rated capacity), the UPS sounds a continuous alarm and LED to warn of an overload condition. Reduce the load to eliminate the overload.

8.0 PIN-Out Configuration for DB9 Connector

Female Connector PIN No.	RS-232 Signal	Open Collector Signal
1	---	---
2	TX	---
3	RD	Remote shutdown*
4	DTR (+12 V)	---
5	GND	GND
6	---	Ac failure
7	RTS (-12 V)	---
8	---	Battery low
9	TX	---

DTR = Data terminal ready
RTS = Request to send
RD = Transmitted data
GND = Signal Ground
TX = Received data
*When a remote shutdown signal is applied for one second, the UPS will shut down in three minutes.

9.0 Battery Backup Times

	SDU 500, SDU 500-5	SDU 850, SDU 850-5
VA/Watts	500/300	850/510
Battery	YUASA NP7-12	YUASA REW45-12
Load Level	Backup Time (Minutes)	Backup Time (Minutes)
10%	130	80
20%	55	37
30%	36	20
40%	23	13
50%	18	10
60%	13	7
70%	10	5
80%	9	4
90%	6	3
100%	5	2.5

10.0 Troubleshooting

Problem	Probable Cause	Required Action
UPS is not ON; LED will not light	UPS is OFF or the ON/OFF/Test button was not pushed for 1+ seconds	Press the ON/OFF/Test button for more than 2 seconds
	Battery voltage is less than 10 V	Recharge the UPS for at least 4 hours. If the unit still does not start, check the input fuse.
	Other failure	Call SolaHD Technical Support
	Load is less than 20 W in Backup Mode	Normal condition
UPS is always in Backup Mode	Loose ac input power connection	Tighten the ac power connection
	Circuit breaker trips	Reset the breaker
	Line voltage too high, too low, or blackout	Normal condition
	Other failure	Call SolaHD Technical Support
Backup time is too short	Battery is not fully charged	Recharge the UPS for at least 4 hours
	Other failure	Call SolaHD Technical Support
Continuous beep & LED overload indication	Overload condition	Remove the overload
Red LED is flashing	Battery failure	Recharge the UPS for at least 8 hours. Perform UPS self-test.

CAUTION **Do not attempt to open the UPS or replace the battery. Call SolaHD Technical Support for further instructions.**

11.0 Storage

11.1 Storage Conditions

Store the UPS covered and upright in a cool, dry location, with its battery fully charged. Before storing, charge the UPS for at least four hours. Remove any accessories in the accessory slot and disconnect any cables connected to the computer interface port to avoid unnecessary draining of the battery.

11.2 Extended Storage

During extended storage in environments where the ambient temperature is -15 to +30 °C (+5 to +86 °F), charge the UPS battery every six months.

During extended storage in environments where the ambient temperature is +30 to +45 °C (+86 to +113 °F), charge the UPS battery every three months.

12.0 Specifications

Description	Catalog Number			
	SDU 500	SDU 850	SDU 500-5	SDU 850-5
INPUT				
Capacity VA/Watts	500/300	850/510	500/300	850/510
Voltage (Single Phase)	120 V + 10%, -20%		230 V +/ -20%	
Frequency	50 or 60 Hz, +/ -10% (auto-sensing)			
OUTPUT				
Voltage (on battery)	Simulated sine wave			
	120 V +/-5%		230 V +/-5%	
Frequency (on battery)	50 or 60 Hz, +/-0.5% auto-sensing			
Transfer Time	<4 milliseconds			
PROTECTION				
Unit Input	Circuit breaker for overload and short circuit protection			
Overload Protection	UPS automatic shutdown if overload exceeds 105% of nominal at 20 s, 120% at 10 s, 130% at 3 s			
Short Circuit	UPS output cut off immediately			
BATTERY				
Type	Sealed, maintenance-free, lead acid batteries			
Typical Recharge Time (to 90% of full capacity)	8 hours			
Backup Time (at full load)	4 min.	2 min.	4 min.	2 min.
ALARM				
ON Battery	Slow beeping every 4 seconds			
Battery Low	Rapid beeping every second			
Overload	Continuous beeping sound			
ENVIRONMENT				
Ambient Operation	0–95% humidity, non-condensing. 50˚C up to 10,000 ft. (3000 m).			
Audible Noise	<40 dBA (1 m from surface)			
WEIGHT & DIMENSIONS				
Net Weight, lb. (kg)	10.7 (4.7)	11.4 (5.0)	11.5 (5.2)	11.9 (5.4)
H x W x D, in. (mm)	4.88 x 11.1 x 4.55 (124 x 281 x 116)			
SAFETY/APPROVALS				
	UL 1778 C-UL Recognized* for industrial applications in accordance with UL 508A without derating. Overvoltage Category 3, Pollution Degree 3. FCC Part 15, Subpart B, Class A.		CE Marked; LVD: EN62040-1-1; EMC: EN50091-2, EN61000-3-2, EN61000-3-3, IEC801-2, IEC801-3, IEC801-4, IEC1000-2-2	

*For Conditions of Acceptability in accordance with UL 508A, see “13.0 Conditions for Safe Use of SDU 500 & 850”.

13.0 Conditions for Safe Use of SDU 500 & 850

NOTE: Applicable for U.S. only.

Considerations shall be given to the following:

1. The equipment shall be installed in compliance with the enclosure, mounting, spacing, casualty, and segregation requirements of the ultimate application.
2. The equipment has been judged on the basis of the required spacings for use in Overvoltage Category III and Pollution Degree 3 and in the Second Edition of the Standard for Uniterruptible Power Supply Equipment, UL 1778, par. 23 and table 23.1, which would cover the component itself if submitted for unrestricted listing.
3. The suitability of grounding connection shall be determined in the end-use product.
4. The equipment is provided with means for permanent mounting, the suitability of assembly shall be determined in the end-use product.
5. Equipment is considered acceptable for use in a maximum ambient of 50°C.
6. The equipment inside live parts are energized from the battery supply even when the input ac power is disconnected.
7. For CNR investigation, total harmonic distortion of 44.8% and maximum single harmonic of 33.1%.
8. The equipment was investigated under 20 amperes branch circuit in accordance with the National Electrical Code, ANSI/NFPA 70, to reduce the risk of fire, connect only to a circuit provided with 20 amperes maximum branch circuit over current protection.
9. Use No. 18 AWG, 90°C copper wire and 9 lb.-in. Torque force when connecting to terminal block.
10. Polarity Identification in UPS unit for filed wiring terminals: Provided with label adjacent to the unit supply connections. See below for details.

Input			Output		
⏚	N	L	⏚	N	L

11. The following tests were additionally conducted at specified conditions as noted below, in accordance with the Standard for Industrial Control Equipment, UL 508A, 17th Edition.

    Temperature Test: Models SDU 850 and SDU 500 were mounted in an enclosure (150% of the dimensions of the device, overall 420 by 180 by 160 mm), in accordance with par. 42.6 of UL 508A. The suitability usage of industrial control equipment shall be considered in end application.

    Breakdown of Components Test: Model SDU 850 had been conducted through a 30-ampere non-time-delay fuse, in accordance with par. 57.5 of UL 508A.

12. **The products, Models SDU 850 and SDU 500 were evaluated based on Pollution Degree 3 and Overvoltage Category III criteria and a minimum end use ambient of 40°C, so that these devices do not have to be derated when installed within an industrial control panel.**

14.0 Product Registration & Warranty Information

14.1 Product Registration

To register your product for updates and information on service and support:

- Visit the Technical Support section of our Web site at: http://www.solahd.com/support/registration.htm
- Click on the Product Registration link and fill in the form. This will register your product with SolaHD.

14.2 Warranty Information

Please see “Terms and Conditions of Sale”.

Technical Support
U.S.: (800) 377-4384
International: (847) 268-6000
E-mail: www.solahd.com

Servicio Técnico
EE.UU. (800) 377-4384
Internacional: (847) 268-6000
Correo electrónico: www.solahd.com

Assistance technique
États-Unis: (800) 377-4384
International: (847) 268-6000
Courriel: www.solahd.com

Part Number: A272-080 Rev 8
May 30, 2008

Fig. 2

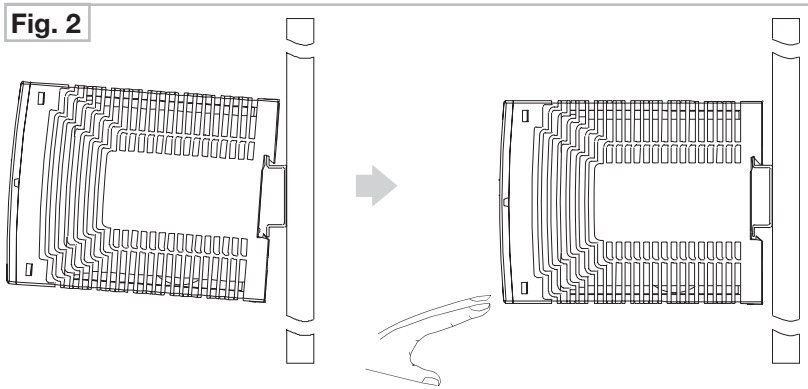

Fig. 3

Connector size range
0.2 - 2.0 (AWG24 - 14)
use copper conductors only

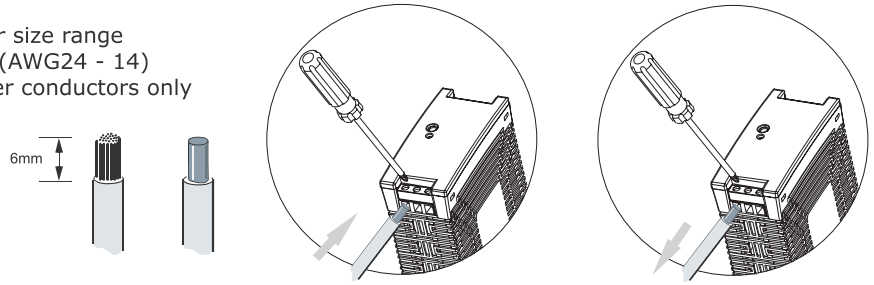

Fig. 4

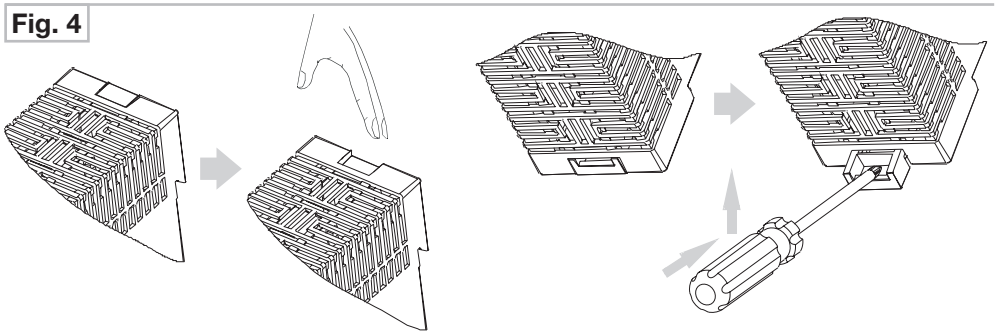

Fig. 5 Derating

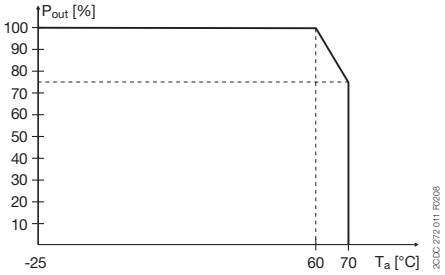

Fig. 6 DC OK Connection

(only CP-E 24/1.25 and CP-E 24/2.5)

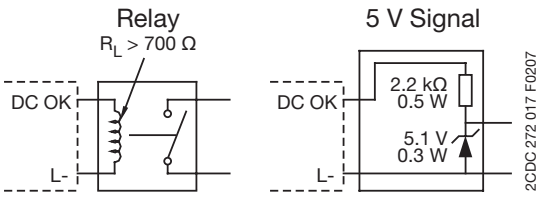

Primary switch mode power supplies

CP-E 12/2.5
CP-E 24/1.25; CP-E 24/2.5
CP-E 48/0.62; CP-E 48/1.25

Operating and installation instructions
Primary switch mode power supplies CP-E range

Note: These operating and installation instructions cannot claim to contain all detailed information of all types of this product range and can even not consider every possible application of the products. All statements serve exclusively to describe the product and have not to be understood as assured characteristics with legal force. Further information and data is obtainable from the catalogues and data sheets of this product, from the local ABB sales organisations as well as on the ABB homepage http://www.abb.com. Subject to change without prior notice. The German text applies in cases of doubt.

The device must be installed by qualified persons only and in accordance with the specific national regulations (e.g., VDE, etc.). Before installing this unit, read these operating and installation instructions carefully and completely. The devices are maintenance-free chassis-mounted units.

Fig. 1

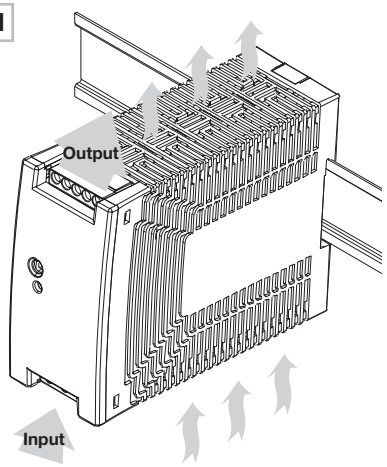

ADDITIONAL INFORMATION RELATING TO UL APPROVALS

THIS EQUIPMENT IS SUITABLE FOR USE IN CLASS I, DIVISION 2, GROUPS A, B, C, and D OR NON-HAZARDOUS LOCATIONS ONLY.

WARNING - EXPLOSION HAZARD - SUBSTITUTION OF COMPONENTS MAY IMPAIR SUITABILITY FOR CLASS I, DIVISION 2.

WARNING - EXPLOSION HAZARD - DO NOT DISCONNECT EQUIPMENT UNLESS POWER HAS BEEN SWITCHED OFF OR THE AREA IS KNOWN TO BE NON-HAZARDOUS.

Max. surrounding air temperature T_a = 50 °C

1SVC 427 031 M0000 A2 (08/08)

ABB Stotz-Kontakt GmbH
Hauptstr. 14-16
78132 Hornberg / Germany
www.abb.com/lowvoltage -> Control Products -> Power Supplies

Safety instructions and warnings:

Disconnect system from supply network!

Before any installation, maintenance or modification work: Disconnect the system from the supply network and protect against switching on.

Before start of operation:

Attention! Improper installation/operation may impair safety and cause operational difficulties or destruction of the unit. Before operation the following must be ensured:

- Connect to main according t the specific national regulations.
- Power supply cables and unit must be sufficiently fused. A disconnecting device has to be provided for the end product to disengage unit and supply cables from supply mains if required.
- The protective earth conductor must be connected to the terminal ⏚ (Protection class I)
- The secondary side of the power supply unit is not earthed and can be earthed by the user according to the needs with L+ or L-.
- Rate the output lines for the output current of the power supply and connect thme with the correct polarity.
- In order to ensure sufficient air-cooling the distance to other devices has to be considered.

In operation:

- Do not modify the installation (primary and secondary side)! High current! Risk of electric arcs and electric shocks (danger to life)!
- Risk of burns: Depending on the operation conditions the enclosure can become very hot.
- The internal fuse is not user-replaceable. If the internal fuse blows, most probably the device is defective. In this case, an examination of the switch mode power supply by the manufacturer is necessary.

Warning: High voltage! Stored energy! Energy hazard at output!

The power supplies contain components with high stored energy and circuits with high voltage! Do not introduce any objects into the unit, and do not open the unit. With some units of this range the output is capable of providing hazardous energy. Ensure that the service personnel is protected against inadvertent contact with parts carrying energy.

Mounting:

1. Fasten the DIN rail (TS35/15 or TS35/7,5 acc. EN 50022) as shown in Fig. 1 on the mounting plate, horizontal mounting position, input terminals on bottom, respect on all sides the minimum distance of 25 mm to other units.
2. Snap on DIN rail as shown in Fig. 2
   1) Tilt the unit slightly upwards and fit the unit on the DIN rail
   2) Lift it downward until it hits the stop
   3) Press against the bottom front side for locking. Shake the unit slightly to check the locking
3. Remove the unit from the DIN rail as shown in Fig. 4. Use an insulated screwdriver for the unlocking.

Electrical connection (see Fig. 3):

Ensure correct dimensioning, stripping length and connection of the cables.

Front elements:

The green LED „OUTPUT OK“ is lightening during operation.
Potentiometer „OUTPUT Adjust“ for the adjustment of the output voltage.

Technical data:

Data at T_a = 25 °C and rated values, unless otherwise stated.

Input circuit		
Rated input voltage		100-240 V AC
AC input voltage range		85-264 V AC
DC input voltage range		90-375 V DC
Frequency range		47-63 Hz
Internal input fuse		2 A slow-acting / 250 V AC
Output circuit		
Rated output voltage		see rating label
Tolerance of the output voltage		± 1 %
Adjustment range of the output voltage		see rating label
Rated output power		see rating label
Derating of the output current	60 °C < T_a ≤ 70 °C	see Fig. 5
Output curve		U/I curve
Open-circuit protection		continuous open-circuit proof
Isolation data		
Rated insulation voltage		3 kV AC
General data		
Ambient temperature range T_a	operation	-25...+70 °C
	rated load	-25...+60 °C
	storage	-25...+85 °C
Dimensions (WxHxD)		43.5 x 88.5 x 115 mm / 1.71 x 3.48 x 4.53 in

Bulletin 193 E1 PLUS Overload Relay Application and Installation

(Cat 193-ED1_ _ , 193*-EE_ _)

Installation

WARNING

To prevent electrical shock, disconnect from power source before installing or servicing. Install in suitable enclosure. Keep free from contaminants. (Follow NFPA70E requirements)

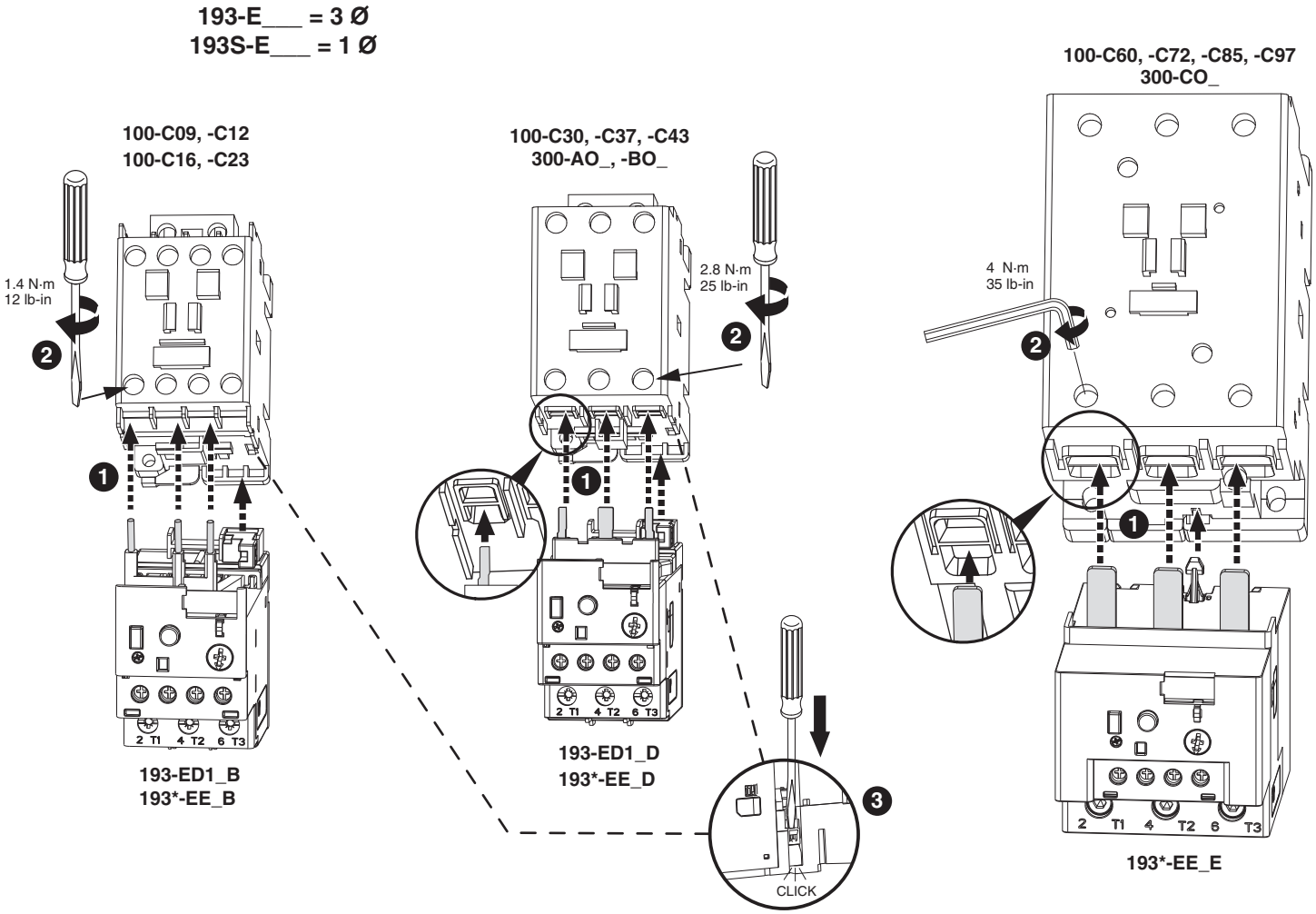

41053-358-01
DIR 41053-358 **(Version 07)**
Printed in U.S.A.

E1 PLUS Features

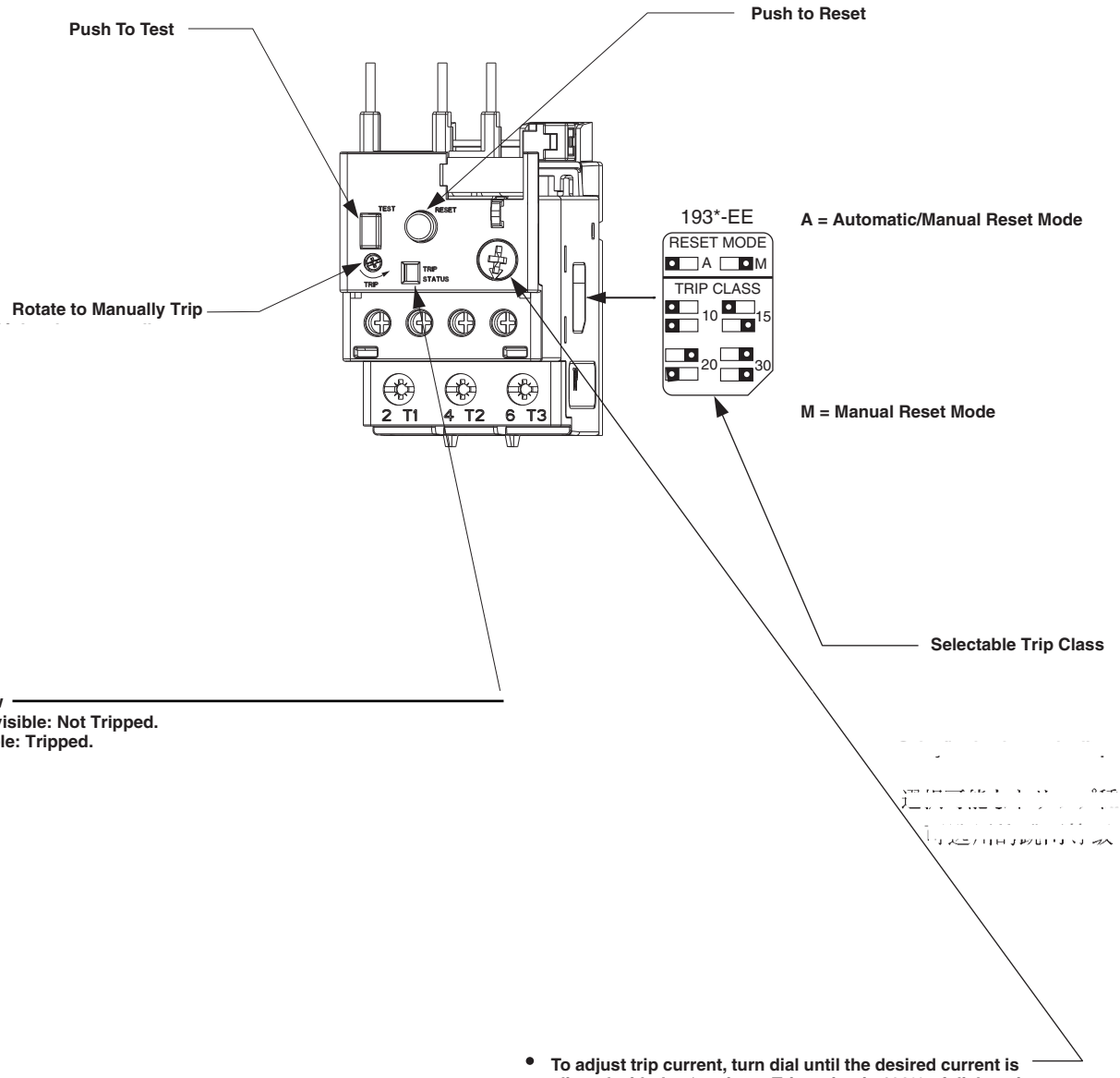

- **Trip Indicator Window**
  Yellow indicator not visible: Not Tripped.
  Yellow indicator visible: Tripped.

- **To adjust trip current, turn dial until the desired current is aligned with the ▲ pointer. Trip rating is 120% of dial setting.**

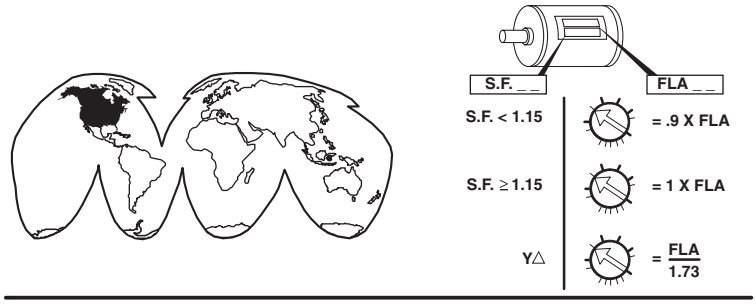

WARNING
AVERTISSEMENT

Do not use automatic reset mode in applications where unexpected automatic restart of the motor can cause injury to persons or damage to equipment.

Contact Status

Normal		Test	Tripped
95 — 96	Closed	Open	Open
97 — 98	Open	Open	Closed
97 95 / 98 96		97 95 / 98 96	97 95 / 98 96

Wiring Diagram - 3 Phase Full Voltage DOL Starter

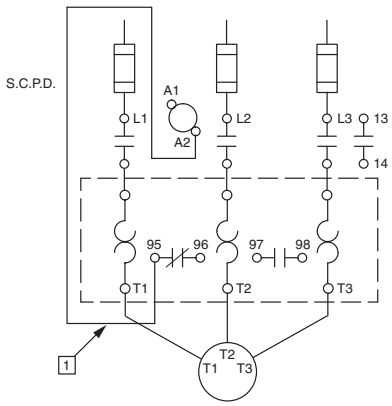

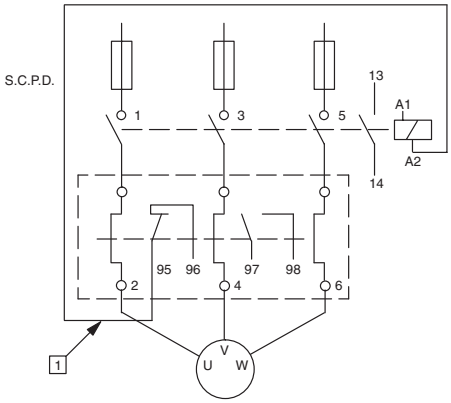

Wiring Diagram - 1 Phase Full Voltage DOL Starter (193S-____)

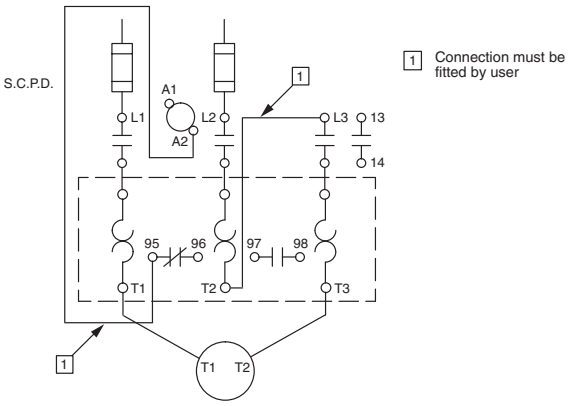

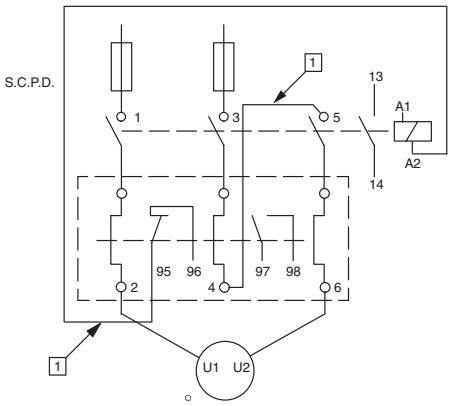

Main Connections

Rated Insulation Voltage (Ui): **690V AC**
Rated Operational Voltage (Ue) IEC/UL: **690V AC/600V AC**
Rated Operating Frequency: **50 / 60 Hz**

	193-ED1_B * 193-EE_B *	193-ED1_D * 193-EE_D *	193-EE_E
Terminal Screw	M5	M5	M8
	1x 2.5 … 16 mm² 2.5 Nm	1x 2.5 … 16 mm² 2.5 Nm	1x 4 … 50 mm² 4.6 Nm
	2x 2.5 … 10 mm² 3.4 Nm	2x 2.5 … 10 mm² 3.4 Nm	2x 4 … 25 mm² 4.6 Nm
	1x 2.5 … 25 mm² 2.5 Nm	1x 2.5 … 25 mm² 2.5 Nm	1x 4 … 50 mm² 4.6 Nm
	2x 2.5 …16 mm² 3.4 Nm	2x 2.5 …16 mm² 3.4 Nm	2x 4 … 35 mm² 4.6 Nm
	1x 14… 6 AWG 22 lb-in	1x 14… 6 AWG 22 lb-in	1x 12 … 1/0 AWG 40 lb-in
	2x 12...6 AWG 30 lb-in	2x 12...6 AWG 30 lb-in	2x 8 … 2 AWG 40 lb-in
	#2	#2	--
	1 x 6 mm	1 x 6 mm	--
	--	--	4 mm

* FOR MULTIPLE CONDUCTOR APPLICATIONS THE SAME SIZE AND STYLE WIRE MUST BE USED.

Control Connections

Rated Insulation Voltage (Ui): **690V AC**
Rated Operational Voltage (Ue) IEC/UL: **690V AC/600V AC**
Rated Operating Current (Ie): **B600 N.O. / N.C.**

Terminal Screw	M3
	1x 0.5 … 2.5 mm² 0.55 Nm
	2x 0.2 … 0.75 mm² 0.55 Nm
	1x 0.5 … 4 mm² 0.55 Nm
	2x 0.2 … 1.5 mm² 0.55 Nm
	1x 24 … 10 AWG 5 lb-in
	2x 22 … 16 AWG 5 lb-in
	#1
	0.6 x 3.5 mm

Accessories

	For Use With	Cat. No.
DIN Rail/Panel Adapter	193-ED1_B, 193*-EE_B	193-EPB
	193-ED1_D, 193*-EE_D	193-EPD
	193*-EE_E	193-EPE
Current Adjustment Shield	193-ED1 (all) 193*-EE (all)	193-BC8
External Reset Adapter	193-ED1 (all) 193*-EE (all)	193-ERA

Trip Curve

COLD START

HOT START

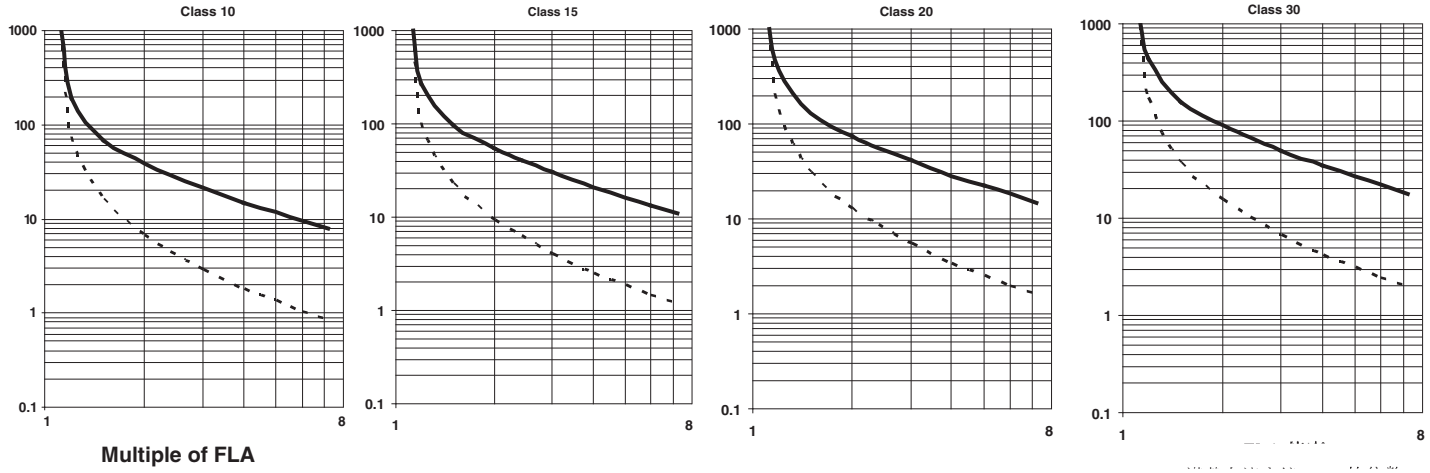

Short Circuit Ratings

Table 1 Standard Fault Short Circuit Ratings per UL508 and CSA 22.2 No. 14

E1 Plus Cat. No.		Max. available fault current (kA)	Max. voltage (V)	S.C.P.D.
193, 193S	ED1AB, ED1BB, EEAB, EEBB	1	600	Suitable for use with fuses only
	ED1CB, ED1DB, ED1EB, ED1ED, ED1FD EECB, EEDB, EEEB, EEED, EEFD, EEPB, EERB, EESB, EETD	5		Not resticted to fusing only
	EEEE, EEFE, EEGE, EEUE, EEVE	10		

Table 2 Type I and Type II Fuse Coordination with Bul. 100-C contactors per EN 60947-4-1

E1 Plus Cat. No.		Contactor Cat. No.	Max. starter FLC (A)	Prospective S.C. current, Ir (kA)	Conditional S.C. current, Iq (kA)	Max. voltage (V)	Type I Max. Class J or CC fuse (A)	Type II Max. Class J or CC fuse (A)
193	ED1AB, EEAB	100-C09	0.5	1	100	600	3	3
	ED1BB, EEBB		1				6	6
	ED1CB, ED1DB, EECB, EEDB	100-C09	9	1			20	15
		100-C12	12				20	20
		100-C16	16				30	30
		100-C23	23				40	40
	ED1EB, EEEB	100-C09	9	3			20	15
		100-C12	12				20	20
		100-C16	16				30	30
		100-C23	23				40	40
	ED1ED, ED1FD EEED, EEFD	100-C30	30	3			50	50
		100-C37	37				50	50
		100-C43	43				70	70
	EEEE, EEFE	100-C60	60	3			80	80
		100-C72	72				100	100
		100-C85	85				150	150
	EEGE	100-C60	60	5			80	80
		100-C72	72				100	100
		100-C85	85				150	150
	EEVE	100-C97	97				150	150

Table 3 Short Circuit Ratings per EN 60947-4-1

E1 Plus Cat. No.		Prospective S.C. current, Ir (kA)	Conditional S.C. current, Iq (kA)	Max. voltage (V)	S.C.P.D.
193,193S	ED1AB, ED1BB, EEAB, EEBB	1	100	690	Suitable for use with fuses only
	ED1CB, ED1DB, EECB, EEDB, EEPB, EERB	1			Not resticted to fusing only
	ED1EB, EEEB, ED1ED, ED1FD, EEED, EEFD, EEEE, EEFE, EESB, EETD	3			
	EEGE, EEUE, EEVE	5			

Table 4 High Fault Short Circuit Ratings, using Fusing, per UL508 and CSA 22.2 No. 14

E1 Plus Cat. No.		Contactor Cat. No.	Max. starter FLC (A)	Max.available fault current (kA)	Max. voltage (V)	Max. UL Class J or CC fuse, CSA HRCI-J (A)
193	ED1AB, EEAB	100-C09	0.5	100	600	3
	ED1BB, EEBB		1			6
	ED1CB, ED1DB, ED1EB, EECB, EEDB, EEEB	100-C09	9			20
		100-C12	12			20
		100-C16	16			30
		100-C23	23			40
	ED1ED, ED1FD EEED, EEFD	100-C30	30			50
		100-C37	37			50
		100-C43	43			70
	EEEE, EEFE, EEGE	100-C60	60			80
		100-C72	72			100
		100-C85	85			150

193-EEED or 193-EEFD with 100-C30, 100-C37 or 100-C43 contactor: 480V/65kA; 600V/30kA when protected by Allen-Bradley 140U-H6C3 followed by suffixes CB rated 50A max.

Table 5 Overload relay only, High fault short circuit ratings per UL508 and CSA 22.2 No. 14

Cat. No.		Max. available fault. current (kA)	Max. voltage (V)	UL class RK1 fuse (A)
193	ED1CB, ED1DB, ED1EB, EECB, EEDB, EEEB	100	600	60
	ED1ED, ED1FD, EEED, EEFD			100
	EEEE, EEFE, EEGE			200

Table 6 Fuse Selection Table Class gL/gG and Class aM Fusing

Motor		Recommended Fuse		Contactor	ED/EE O/L Relay	
[kW]	1500 rpm [A]	Type	Rated Current [A]	Type	Type	Thermal Setting [A]
0.06	0.24	Class gL/gG	2	100-C09	193-ED1AB	0.10 - 0.50
0.09	0.33	Class gL/gG	2	100-C09	193-ED1AB	0.10 - 0.50
0.12	0.43	Class gL/gG	2	100-C09	193-ED1AB	0.10 - 0.50
0.18	0.61	Class gL/gG	2	100-C09	193-ED1BB	0.20 - 1.0
0.25	0.8	Class gL/gG	4	100-C09	193-ED1BB	0.20 - 1.0
0.37	1.1	Class gL/gG	4	100-C09	193-ED1CB	1.0 - 5.0
0.55	1.5	Class gL/gG	6	100-C09	193-ED1CB	1.0 - 5.0
0.75	1.9	Class gL/gG	6	100-C09	193-ED1CB	1.0 - 5.0
1.1	2.7	Class gL/gG	10	100-C09	193-ED1CB	1.0 - 5.0
1.5	3.5	Class gL/gG	10	100-C09	193-ED1CB	1.0 - 5.0
2.2	5.0	Class gL/gG	16	100-C09	193-ED1DB	3.2 - 16
3	6.6	Class gL/gG	20	100-C09	193-ED1DB	3.2 - 16
4	8.5	Class gL/gG	25	100-C09	193-ED1DB	3.2 - 16
5.5	11	Class gL/gG	32	100-C12	193-ED1DB	3.2 - 16
7.5	15	Class gL/gG	40	100-C23	193-ED1DB	3.2 - 16
10	20	Class gL/gG	50	100-C30	193-EEED	5.4 - 27
11	22	Class gL/gG	63	100-C30	193-EEED	5.4 - 27
15	29	Class gL/gG	80	100-C30	193-EEFD	9 - 45
18.5	36	Class gL/gG	80	100-C37	193-EEFD	9 - 45
22	41	Class gL/gG	100	100-C43	193-EEFD	9 - 45
30	56	Class gL/gG	125	100-C60	193-EEGE	18 - 90
37	68	Class gL/gG	160	100-C72	193-EEGE	18 - 90
45	81	Class gL/gG	160	100-C85	193-EEGE	18 - 90

Motor		Recommended Fuse		Contactor	ED/EE O/L Relay	
[kW]	1500 rpm [A]	Type	Rated Current [A]	Type	Type	Thermal Setting [A]
0.06	0.24	Class aM	1	100-C09	193-ED1AB	0.10 - 0.50
0.09	0.33	Class aM	1	100-C09	193-ED1AB	0.10 - 0.50
0.12	0.43	Class aM	1	100-C09	193-ED1AB	0.10 - 0.50
0.18	0.61	Class aM	2	100-C09	193-ED1BB	0.20 - 1.0
0.25	0.8	Class aM	2	100-C09	193-ED1BB	0.20 - 1.0
0.37	1.1	Class aM	2	100-C09	193-ED1CB	1.0 - 5.0
0.55	1.5	Class aM	2	100-C09	193-ED1CB	1.0 - 5.0
0.75	1.9	Class aM	4	100-C09	193-ED1CB	1.0 - 5.0
1.1	2.7	Class aM	4	100-C09	193-ED1CB	1.0 - 5.0
1.5	3.5	Class aM	4	100-C09	193-ED1CB	1.0 - 5.0
2.2	5.0	Class aM	6	100-C09	193-ED1DB	3.2 - 16
3	6.6	Class aM	8	100-C09	193-ED1DB	3.2 - 16
4	8.5	Class aM	10	100-C09	193-ED1DB	3.2 - 16
5.5	11	Class aM	12	100-C12	193-ED1DB	3.2 - 16
7.5	15	Class aM	16	100-C16	193-ED1DB	3.2 - 16
11	22	Class aM	25	100-C30	193-EEFD	9 - 45
15	29	Class aM	32	100-C30	193-EEFD	9 - 45
18.5	36	Class aM	40	100-C37	193-EEFD	9 - 45
22	41	Class aM	50	100-C43	193-EEFD	9 - 45
30	56	Class aM	63	100-C60	193-EEGE	18 - 90
37	68	Class aM	80	100-C72	193-EEGE	18 - 90
45	81	Class aM	100	100-C85	193-EEGE	18 - 90

Table 7 High fault short circuit ratings, using Bul. 140M, circuit breakers, per UL508 and CSA 22.2 No.14

E1 Plus Cat. No.		Contactor Cat. No.	Max. starter FLC (A)	Max. available fault current (kA)		Circuit Breaker Cat. No.	Max. Circuit Breaker Current (A)
				At 480V	At 600Y/347 V		
193	ED1ED, ED1FD, EEED, EEFD	100-C30	30	65	30	140M-H8P-C30	30
		100-C30	30	65	30	140M-H8P-C50	50
		100-C37	37	65	30	140M-H8P-C50	50
		100-C43	43	65	30	140M-H8P-C50	50
	EEEE, EEFE, EEGE	100-C60	60	65	30	140M-H8P-D10	100
		100-C72	72	65	30	140M-H8P-D10	100
		100-C85	85	65	30	140M-H8P-D10	100

Table 8 High fault short circuit ratings, using Bul. 140U, circuit breakers, per UL508 and CSA 22.2 No.14

E1 Plus Cat. No.		Contactor Cat. No.	Max. starter FLC (A)	Max. available fault current (kA)		Circuit Breaker Cat. No.	Max. Circuit Breaker Current (A)
				At 480V	At 600V		
193	ED1ED, ED1FD, EEED, EEFD	100-C30	30	50	25	140U-H*C3-C50	50
		100-C37	37	50	25	140U-H*C3-C50	50
		100-C43	43	50	25	140U-H*C3-C50	50
	EEEE, EEFE, EEGE	100-C60	60	65	25	140U-H*C3-D11	110
		100-C72	72	65	25	140U-H*C3-D11	110
		100-C85	85	65	25	140U-H*C3-D11	110

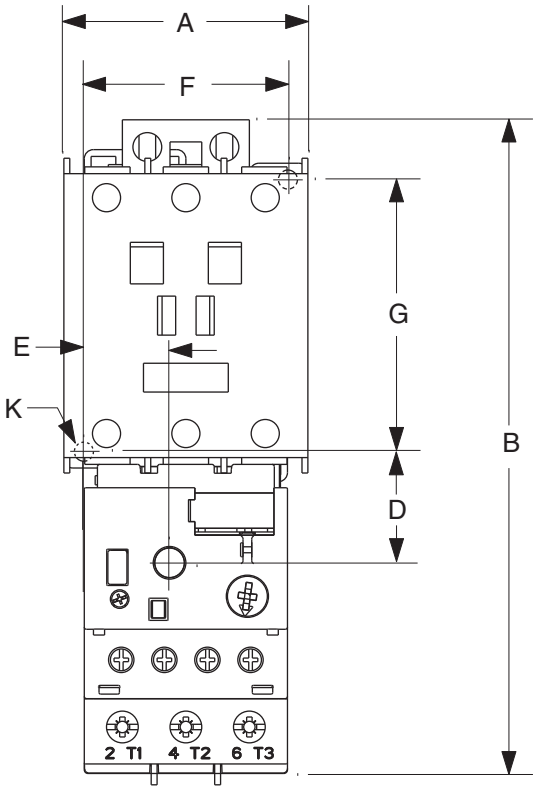

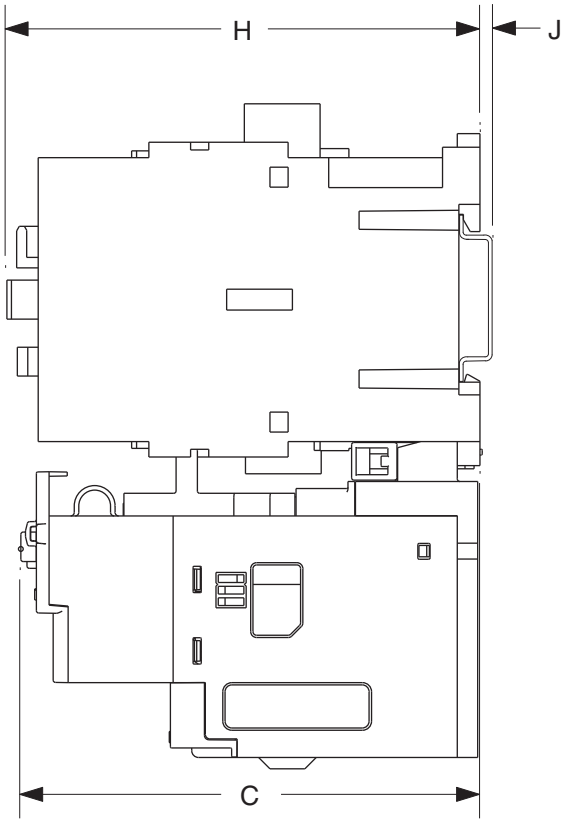

CONTACTOR CAT. NO.	E1 PLUS CAT. NO.		A	B	C	D	E	F	G	H	J	K
100-C09, -C12, -C16, -C23	193-ED1_B, 193*-EE_B	mm (in)	45 (1.76)	146.6 (5.77)	85.2 (3.35)	24.5 (.96)	13.9 (.55)	35 (1.38)	60 (2.36)	86.5 (3.40)	2 (.08)	4.5 (.17)
100-C30, -C37	193-ED1_D, 193*-EE_D	mm (in)	45 (1.76)	146.6 (5.77)	101.2 (3.98)	24.5 (.96)	13.9 (.55)	35 (1.38)	60 (2.36)	104 (4.09)	2 (.08)	4.5 (.17)
100-C43		mm (in)	54 (2.12)	146.6 (5.77)	101.2 (3.98)	24.5 (.96)	18.4 (.74)	45 (1.77)	60 (2.36)	104 (4.09)	2 (.08)	4.5 (.17)
100-C60, -C72, -C85, -C97	193*-EE_E	mm (in)	72 (2.83)	192 (7.57)	120.4 (4.74)	29 (1.14)	23.8 (.94)	55 (2.16)	100 (3.94)	126 (4.94)	2 (.08)	5.4 (.21)
300-AO_, -BO_	193-ED1_D, 193*-EE_D	mm (in)	45 (1.76)	146.6 (5.77)	101.2 (3.98)	24.5 (.96)	13.9 (.55)	35 (1.38)	60 (2.36)	104 (4.09)	2 (.08)	4.5 (.17)
300-CO_	193*-EE_E	mm (in)	72 (2.83)	192 (7.57)	120.4 (4.74)	29 (1.14)	23.8 (.94)	55 (2.16)	100 (3.94)	126 (4.94)	2 (.08)	5.4 (.21)

41053-358-01
DIR 41053-358 **(Version 07)**
Printed in U.S.A.

Rockwell Automation

A19 Series Temperature Controls -- Single-Pole, Single-Throw and Single-Pole, Double-Throw Models with NEMA 1 Enclosure

Application

These controls are designed to cover a broad range of general purpose operating temperature control applications in the refrigeration, air conditioning and heating field with a minimum number of models. Typical applications are: frozen food cases, display cases, beverage coolers, milk coolers, etc. Various control ranges are available.

Controls are supplied with an adjustable range (except models with factory sealed settings) and adjustable or nonadjustable differential.

All Series A19 temperature controls are designed for use *only* as operating controls. Where an operating control failure would result in personal injury and/or loss of property, it is the responsibility of the installer to add devices (safety, limit controls) or systems (alarm, supervisory systems) that protect against, or warn of, control failure.

Installation

Follow equipment manufacturer's instructions if provided. If instructions are not provided proceed as follows:

Mounting

Controls are normally mounted to a surface through holes in back of case.

⚠ CAUTION: On rough mounting surfaces use the top two mounting holes only. When these controls are mounted on an uneven surface using screws in all four holes, the case can be twisted enough to affect the control's calibration and operation.

For closed tank applications without well assembly Part No. FTG13A-600R packing nut assembly may be supplied. See Fig. 2 for sequence of installation. Put parts over support tube section of element, placing bulb into tank. Tighten 1/2 in. NPT adapter. Screw packing nut into adapter with the retaining washers and packing in place as shown.

To install models supplied with bulb well, first install bulb well into tank. Remove bushing from bulb well and slide bushing over capillary. Replace bushing into bulb well. Push bulb into position in bottom of well. Tighten set screw in end of adapter to hold bulb in position. See Fig. 3 for bulb well illustration.

⚠ CAUTION: Do not dent or deform the sensitive bulb of this control. A dent or deformation will change the calibration and cause the control to cycle at a temperature lower than the dial setting. When the bulb mounting clip is used to mount the bulb near the refrigerant tubing, be sure the sheet metal screw does not pierce the tubing.

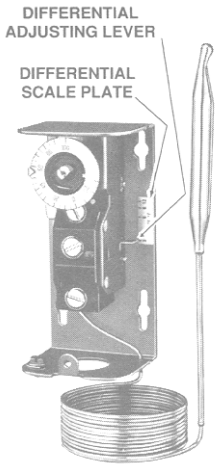

Fig. 1 -- An A19 with external range adjustment and screwdriver slot.

Adjustments

The A19 temperature controls may be supplied with an external range adjustment and screwdriver slot as shown in Fig. 1, range adjustment knob or solid cover. Solid cover models with calibrated dial are adjusted by removing the cover and moving dial so the desired setting is in line with the dial pointer on the stop bracket. (See Fig. 5.) Convertible adjustment models can be field converted from concealed screwdriver slot adjustment to knob adjustment or external screwdriver slot adjustment. They are supplied with a snap-in plug in the cover to provide concealed screwdriver slot adjustment. For knob adjustment remove the snap-in plug and press the knob onto the slotted shaft. For external screwdriver slot adjustment remove the snap-in plug. The convertible adjustment models with remote bulb include a bulb mounting clip.

© 1988 Johnson Controls, Inc.

Code No. LIT-121015
Part No. 997-349

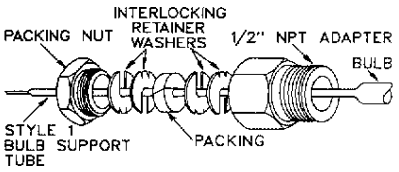

Fig. 2 -- Part No. FTG13A-600R packing nut assembly. (Used with swaged bulb with support tube for direct immersion application.)

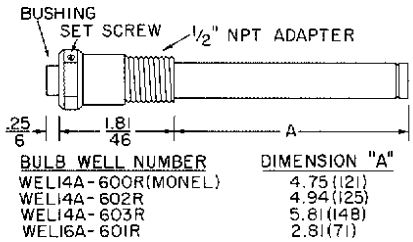

Fig. 3 -- Bulb well for liquid immersion applications where a temperature bulb may be removed without draining tank.

Dial settings normally indicate the cutout setting unless otherwise specified by the equipment manufacturer. Models with SPDT contacts are normally set so the red (common) to yellow contacts open at the dial setting.

Models with adjustable differential and ranges of 20/80°F (-5/28°C), -30/50°F (-35/10°C) and -30/100°F (-35/40°C) have a differential scale plate showing increments of differential. Other ranges have a scale plate with a multiplier. For example when "MIN" differential is 5F° (2.8C°) then x2 is 10F° (5.6C°), x3 is 15F° (8.3C°), etc. The controls are supplied with adjusting lever at minimum differential stamped on the control. To adjust move the lever to the differential required.

Low cutout or high cutout stop supplied on certain models (specified by the equipment manufacturer).

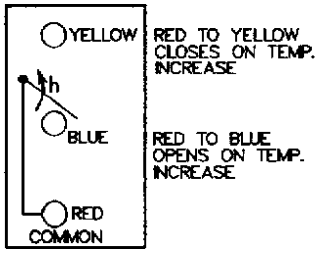

Fig. 4 -- Terminal arrangement of SPDT models.

If high or low cutout stop adjustment is required proceed as follows:

1. Set dial to temperature at which stop is desired.
2. Remove cover of the control.
3. Loosen the cutout stop screw, slide the screw to the front of the temperature control against the plastic step behind the dial and tighten the screw. (See Fig. 5.) Sometimes an exact stop setting is not possible and stop must be set to the closest stop corresponding to dial setting required.
4. Replace cover.

Wiring

> ⚠ CAUTION: Disconnect power supply before wiring connections are made to avoid possible electrical shock or damage to equipment.

All wiring should conform to the National Electrical Code and local codes. Single-pole, double-throw models should be wired as shown in Fig. 4. Use copper conductor only.

> ⚠ CAUTION: Use terminal screws furnished (8-32 × 1/4 in. binder head). Substitution of other screws may cause problems in making proper connections.

Checkout Procedure

Before applying power, make sure installation and wiring connections are according to job specifications. After the necessary mechanical adjustment and electrical connections have been made, an operational checkout is recommended.

Adjust the control setpoint to put the system in operation and observe at least three complete operating cycles to be sure that all components are functioning correctly.

If the system fails to operate, recheck the wiring and components.

Repairs and Replacement

Field repairs must not be made. For a replacement control contact the nearest Johnson Controls representative.

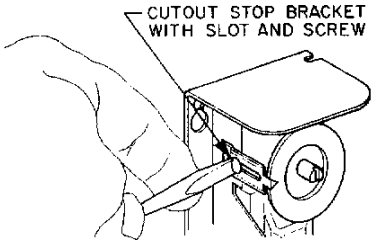

Fig. 5 -- All models have a screw type cutout stop. The stop screw must be loosened and moved to the stop setting desired. Tighten screw after setting is made.

JOHNSON CONTROLS

Controls Group
507 E. Michigan Street
P.O. Box 423
Milwaukee, WI 53202

Printed in U.S.A.

BULLETIN 855P PANEL MOUNT ALARMS

The new Allen-Bradley panel mount alarms offer a high level of environmental integrity to your panel with UL type 4/4X/13, IP65 ratings. The 855P family offers a visual and acoustic signaling solution that compliments Allen-Bradley push button products.

Panel Mount Signaling Devices

- Bulletin 855P Sounders Page 2
- Bulletin 855PC Sounders with LED Page 3
- Bulletin 855PS Strobes Page 4
- Bulletin 855PB Selectable Steady or Flashing LED Page 5
- Bulletin 855PD Dual Circuit Alarms Page 6

Bulletin 855P

Panel Mount Signaling Devices

Overview/Product Selection

Bulletin 855P — Panel Mount Signaling Products

- Mounts in Standard 22.5 mm Hole
- Watertight Panel Alarms in 3 Different Sizes
- Sound Output Ranging from 80 dB @ 1 Meter to 105 dB @ 1 Meter
- IP65 Environmental Rating
- UL Type 4/4X/13
- Selectable Continuous or Pulsing Tone on 30 mm and 45 mm
- Selectable Continuous, Wobble or Pulsing Tone on 65 mm
- Combination Sounder and LED products
- Panel Mount Strobe or LED Indicator products
- Plug-in Terminal Blocks, IP2X Rated

Table of Contents

Product Selection ..... this page
Accessories..... 6
Specifications..... 7
Approximate Dimensions..... 8

Standards Compliance and Certifications

EN 60947-5-1
EN 61000-6-2
EN 50081-2
UL 508
CSA 22.2 No. 14
cULus Listed (File No. E14840, Guide No. NKCR)
CE Marked

Bulletin 855PS — Panel Mount Strobe

855PS –	B	10	ME	3	22
	a	*b*	*c*	*d*	*e*

30 mm Panel Mount Strobe

45 mm Panel Mount Strobe

65 mm Panel Mount Strobe

a

Housing Color	
Code	Description
B	Black

b

Voltage	
Code	Description
~~12~~	~~12V AC/DC~~
~~24~~	~~24V AC/DC~~
10	120V AC
~~20~~	~~240V AC~~
~~30~~	~~12…24V AC/DC~~

c

Size	
Code	Description
~~05~~	~~30 mm~~
ME	45 mm✶
LE	65 mm❄

d

Lens Color	
Code	Description
~~3~~	~~Green~~
4	Red
~~5~~	~~Amber~~
~~6~~	~~Blue~~
~~7~~	~~Clear~~
~~8~~	~~Yellow~~

e

Mounting Hole	
Code	Description
22	22.5 mm

Housing Color	Voltage	Size	Lens Color	Cat. No.
Black	24V AC/DC	30 mm	Green	855PS-B24SE322
			Red	855PS-B24SE422
	12…24V AC/DC	45 mm	Green	855PS-B30ME322
			Red	855PS-B30ME422
		65 mm	Green	855PS-B30LE322
			Red	855PS-B30LE422
	120V AC	30 mm	Green	855PS-B10SE322
			Red	855PS-B10SE422
		45 mm	Green	855PS-B10ME322
			Red	855PS-B10ME422
		65 mm	Green	855PS-B10LE322
			Red	855PS-B10LE422

✶ Only available in 12V AC/DC, 24V AC/DC, 120V AC, or 240V AC.
❄ Only available in 12…24V AC/DC, 120V, or 240V AC.

Panel Strobe and Single/Two Color LED Lights

Technical		
Housing:	Base Material	Polycarbonate, black
	Lens	Polycarbonate, red, amber, yellow, green, blue, and clear
Protection class		IP65/UL Type 4, 4X, 13, IP2X
Terminals		Plug-in terminal block, up to 2.5 mm² (14 AWG)
Operation temperature range		–25…+60 °C
Storage temperature range		–25…+85 °C
Mounting		Central mounting for bore holes 22 mm or 30.5 mm with Hole Adapter Kit
Mounting Nut Torque		1.7 Nm (15 ib-in)

Electrical							
		LED — Steady/Flashing			Strobe Light		
		65 mm	45 mm	30 mm	65 mm	45 mm	30 mm
Supply voltage range	12V AC/DC - 50/60 Hz	+/–10%	+/–10%	+/–10%	—	—	+/–10%
	24V AC/DC - 50/60 Hz	+/–10%	+/–10%	+/–10%	—	—	+/–10%
	12…24V AC/DC 50/60 Hz	—	—	—	8…26V AC/DC	8…26V AC/DC	—
	120V AC - 50/60 Hz	+/–10%	+/–10%	+/–10%	+/–10%	+/–10%	+/–10%
	230/240V AC - 50/60 Hz	+/–10%	+/–10%	+/–10%	+/–10%	+/–10%	+/–10%
Nominal current — single color (two color w/ full or half illumination)	12V AC/DC - 50/60 Hz	75 mA	60 mA	30 mA	—	—	15 mA
	24V AC/DC - 50/60 Hz	54 mA (full: 71 mA half: 44 mA)	35 mA (full: 46 mA half: 39 mA)	25 mA (full: 28 mA half: 30 mA)	—	—	10 mA
	12…24V AC/DC 50/60 Hz @ 12V	—	—	—	150 mA	110 mA	—
	12…24V AC/DC 50/60 Hz @ 24V	—	—	—	140 mA	100 mA	—
	120V AC - 50/60 Hz	25 mA (full: 61 mA half: 41 mA)	25 mA (full: 35 mA half: 35 mA)	20 mA	30 mA	20 mA	10 mA
	230/240V AC - 50/60 Hz	25 mA (full: 61 mA half: 41 mA)	25 mA (full: 35 mA half: 34 mA)	20 mA	20 mA	12 mA	10 mA
Turn-on Leakage Current		≥3 mA	≥3 mA	≥3 mA	≥3 mA	≥3 mA	≥3 mA
Steady/Flashing light		Externally by terminal connection			—	—	—
Flashing frequency		2 Hz	2 Hz	2 Hz	min. 1.4 Hz	min. 1.4 Hz	min. 1.4 Hz
Light source		LED			XENON tube		LED
Flash energy		—	—	—	1 J	0.5 J	—
Weight		60 g	40 g	40 g	80 g	60 g	40 g

Panel Mount Signaling Devices

Approximate Dimensions

Dimensions in millimeters (inches). Dimensions are not intended to be used for manufacturing purposes.

30 mm Sounder∗

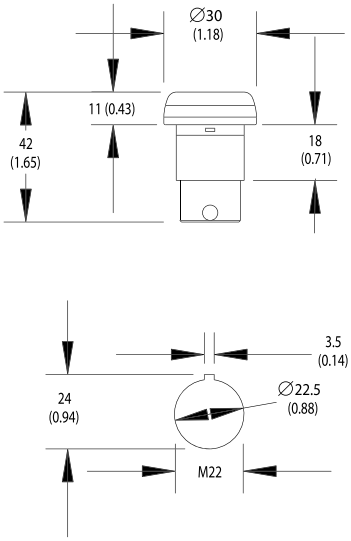

30 mm LED∗
30 mm Strobe∗

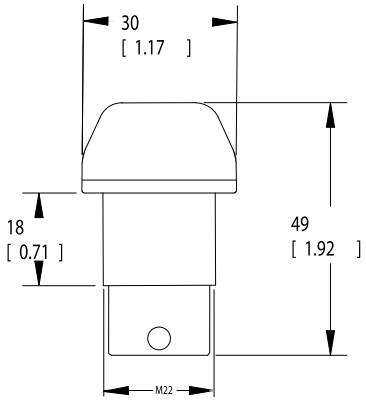

45 mm Sounder❄

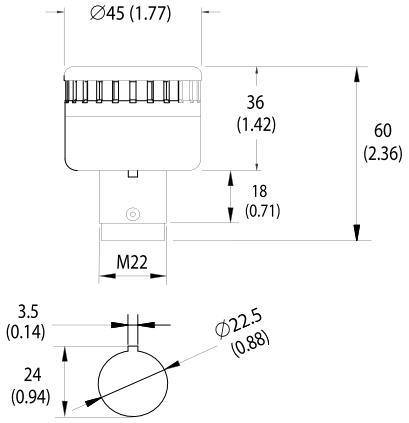

45 mm Sounder with LED❄

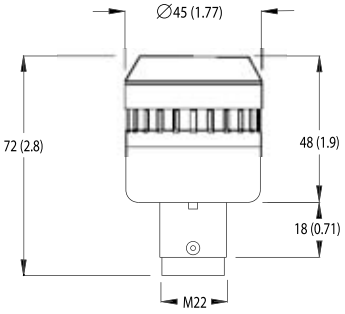

45 mm LED❄
45 mm Strobe❄

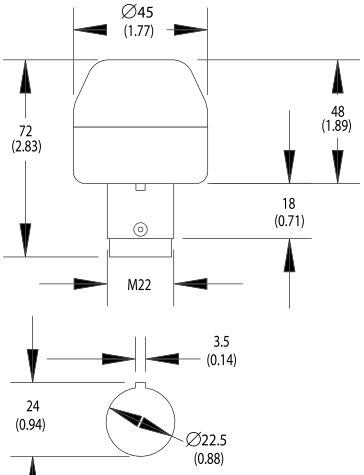

65 mm Sounder❄

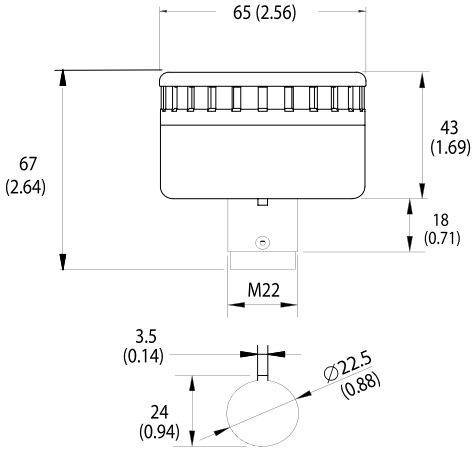

65 mm LED❄
65 mm Sounder❄

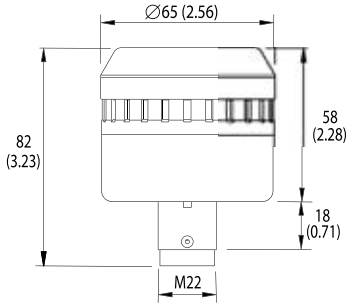

∗ Terminal connector adds 14 mm to back of panel depth.
❄ Terminal connector adds 9 mm to back of panel depth.

Hardware User Manual

EA-USER-M

WARNING

Thank you for purchasing automation equipment from **Automationdirect.com®**, doing business as, **AutomationDirect**. We want your new automation equipment to operate safely. Anyone who installs or uses this equipment should read this publication (and any other relevant publications) before installing or operating the equipment.

To minimize the risk of potential safety problems, you should follow all applicable local and national codes that regulate the installation and operation of your equipment. These codes vary from area to area and usually change with time. It is your responsibility to determine which codes should be followed, and to verify that the equipment, installation, and operation is in compliance with the latest revision of these codes.

At a minimum, you should follow all applicable sections of the National Fire Code, National Electrical Code, and the codes of the National Electrical Manufacturer's Association (NEMA). There may be local regulatory or government offices that can also help determine which codes and standards are necessary for safe installation and operation.

Equipment damage or serious injury to personnel can result from the failure to follow all applicable codes and standards. We do not guarantee the products described in this publication are suitable for your particular application, nor do we assume any responsibility for your product design, installation, or operation.

Our products are not fault-tolerant and are not designed, manufactured or intended for use or resale as on-line control equipment in hazardous environments requiring fail-safe performance, such as in the operation of nuclear facilities, aircraft navigation or communication systems, air traffic control, direct life support machines, or weapons systems, in which the failure of the product could lead directly to death, personal injury, or severe physical or environmental damage ("High Risk Activities"). **AutomationDirect** specifically disclaims any expressed or implied warranty of fitness for High Risk Activities.

For additional warranty and safety information, see the Terms and Conditions section of our catalog. If you have any questions concerning the installation or operation of this equipment, or if you need additional information, please call us at 770-844-4200.

This publication is based on information that was available at the time it was printed. At **AutomationDirect** we constantly strive to improve our products and services, so we reserve the right to make changes to the products and/or publications at any time without notice and without any obligation. This publication may also discuss features that may not be available in certain revisions of the product.

Trademarks

This publication may contain references to products produced and/or offered by other companies. The product and company names may be trademarked and are the sole property of their respective owners. **AutomationDirect** disclaims any proprietary interest in the marks and names of others.

Copyright 2005-2009, Automationdirect.com® Incorporated
All Rights Reserved

No part of this manual shall be copied, reproduced, or transmitted in any way without the prior, written consent of **Automationdirect.com® Incorporated**. **AutomationDirect** retains the exclusive rights to all information included in this document.

ADVERTENCIA

Gracias por comprar equipo de automatización de **Automationdirect.com®**. Deseamos que su nuevo equipo de automatización opere de manera segura. Cualquier persona que instale o use este equipo debe leer esta publicación (y cualquier otra publicación pertinente) antes de instalar u operar el equipo.

Para reducir al mínimo el riesgo debido a problemas de seguridad, debe seguir todos los códigos de seguridad locales o nacionales aplicables que regulan la instalación y operación de su equipo. Estos códigos varian de área en área y usualmente cambian con el tiempo. Es su responsabilidad determinar cuales códigos deben ser seguidos y verificar que el equipo, instalación y operación estén en cumplimiento con la revisión mas reciente de estos códigos.

Como mínimo, debe seguir las secciones aplicables del Código Nacional de Incendio, Código Nacional Eléctrico, y los códigos de (NEMA) la Asociación Nacional de Fabricantes Eléctricos de USA. Puede haber oficinas de normas locales o del gobierno que pueden ayudar a determinar cuales códigos y normas son necesarios para una instalación y operación segura.

Si no se siguen todos los códigos y normas aplicables, puede resultar en daños al equipo o lesiones serias a personas. No garantizamos los productos descritos en esta publicación para ser adecuados para su aplicación en particular, ni asumimos ninguna responsabilidad por el diseño de su producto, la instalación u operación.

Nuestros productos no son tolerantes a fallas y no han sido diseñados, fabricados o intencionados para uso o reventa como equipo de control en línea en ambientes peligrosos que requieren una ejecución sin fallas, tales como operación en instalaciones nucleares, sistemas de navegación aérea, o de comunicación, control de tráfico aéreo, máquinas de soporte de vida o sistemas de armamentos en las cuales la falla del producto puede resultar directamente en muerte, heridas personales, o daños físicos o ambientales severos ("Actividades de Alto Riesgo"). **Automationdirect.com** específicamente rechaza cualquier garantía ya sea expresada o implicada para actividades de alto riesgo.
Para información adicional acerca de garantía e información de seguridad, vea la sección de Términos y Condiciones de nuestro catálogo. Si tiene alguna pregunta sobre instalación u operación de este equipo, o si necesita información adicional, por favor llámenos al número 770-844-4200 en Estados Unidos.
Esta publicación está basada en la información disponible al momento de impresión. En **Automationdirect.com** nos esforzamos constantemente para mejorar nuestros productos y servicios, así que nos reservamos el derecho de hacer cambios al producto y/o a las publicaciones en cualquier momento sin notificación y sin ninguna obligación. Esta publicación también puede discutir características que no estén disponibles en ciertas revisiones del producto.

Marcas Registradas

Esta publicación puede contener referencias a productos producidos y/u ofrecidos por otras compañías. Los nombres de las compañías y productos pueden tener marcas registradas y son propiedad única de sus respectivos dueños. Automationdirect.com, renuncia cualquier interés propietario en las marcas y nombres de otros.

PROPIEDAD LITERARIA 2005-2009, AUTOMATIONDIRECT.COM® INCORPORATED
Todos los derechos reservados

No se permite copiar, reproducir, o transmitir de ninguna forma ninguna parte de este manual sin previo consentimiento por escrito de **Automationdirect.com® Incorprated**. **Automationdirect.com** retiene los derechos exclusivos a toda la información incluida en este documento. Los usuarios de este equipo pueden copiar este documento solamente para instalar, configurar y mantener el equipo correspondiente. También las instituciones de enseñanza pueden usar este manual para propósitos educativos.

AVERTISSEMENT

Nous vous remercions d'avoir acheté l'équipement d'automatisation de **Automationdirect.com®**, en faisant des affaires comme, **AutomationDirect**. Nous tenons à ce que votre nouvel équipement d'automatisation fonctionne en toute sécurité. Toute personne qui installe ou utilise cet équipement doit lire la présente publication (et toutes les autres publications pertinentes) avant de l'installer ou de l'utiliser.

Afin de réduire au minimum le risque d'éventuels problèmes de sécurité, vous devez respecter tous les codes locaux et nationaux applicables régissant l'installation et le fonctionnement de votre équipement. Ces codes diffèrent d'une région à l'autre et, habituellement, évoluent au fil du temps. Il vous incombe de déterminer les codes à respecter et de vous assurer que l'équipement, l'installation et le fonctionnement sont conformes aux exigences de la version la plus récente de ces codes.

Vous devez, à tout le moins, respecter toutes les sections applicables du Code national de prévention des incendies, du Code national de l'électricité et des codes de la National Electrical Manufacturer's Association (NEMA). Des organismes de réglementation ou des services gouvernementaux locaux peuvent également vous aider à déterminer les codes ainsi que les normes à respecter pour assurer une installation et un fonctionnement sûrs.

L'omission de respecter la totalité des codes et des normes applicables peut entraîner des dommages à l'équipement ou causer de graves blessures au personnel. Nous ne garantissons pas que les produits décrits dans cette publication conviennent à votre application particulière et nous n'assumons aucune responsabilité à l'égard de la conception, de l'installation ou du fonctionnement de votre produit.

Nos produits ne sont pas insensibles aux défaillances et ne sont ni conçus ni fabriqués pour l'utilisation ou la revente en tant qu'équipement de commande en ligne dans des environnements dangereux nécessitant une sécurité absolue, par exemple, l'exploitation d'installations nucléaires, les systèmes de navigation aérienne ou de communication, le contrôle de la circulation aérienne, les équipements de survie ou les systèmes d'armes, pour lesquels la défaillance du produit peut provoquer la mort, des blessures corporelles ou de graves dommages matériels ou environnementaux («activités à risque élevé»). La société **AutomationDirect** nie toute garantie expresse ou implicite d'aptitude à l'emploi en ce qui a trait aux activités à risque élevé.

Pour des renseignements additionnels touchant la garantie et la sécurité, veuillez consulter la section Modalités et conditions de notre documentation. Si vous avez des questions au sujet de l'installation ou du fonctionnement de cet équipement, ou encore si vous avez besoin de renseignements supplémentaires, n'hésitez pas à nous téléphoner au 770-844-4200.

Cette publication s'appuie sur l'information qui était disponible au moment de l'impression. À la société **AutomationDirect**, nous nous efforçons constamment d'améliorer nos produits et services. C'est pourquoi nous nous réservons le droit d'apporter des modifications aux produits ou aux publications en tout temps, sans préavis ni quelque obligation que ce soit. La présente publication peut aussi porter sur des caractéristiques susceptibles de ne pas être offertes dans certaines versions révisées du produit.

Marques de commerce

La présente publication peut contenir des références à des produits fabriqués ou offerts par d'autres entreprises. Les désignations des produits et des entreprises peuvent être des marques de commerce et appartiennent exclusivement à leurs propriétaires respectifs. **AutomationDirect** nie tout intérêt dans les autres marques et désignations.

Copyright 2005-2009, Automationdirect.com® Incorporated
Tous droits réservés

Nulle partie de ce manuel ne doit être copiée, reproduite ou transmise de quelque façon que ce soit sans le consentement préalable écrit de la société **Automationdirect.com® Incorporated**. **AutomationDirect** conserve les droits exclusifs à l'égard de tous les renseignements contenus dans le présent document.

HARDWARE USER MANUAL

Please include the Manual Number and the Manual Issue, both shown below, when communicating with Technical Support regarding this publication.

Manual Number: EA-USER-M
Issue: 2nd Edition Rev. D
Issue Date: 10/09

Publication History		
Issue	**Date**	**Description of Changes**
First Edition	11/05	Original
Rev. A	01/06	Added chapters and content.
Rev. B	04/06	Added chapters 7-9 and appendix B.
Rev. C	08/07	Added AB EtherNet/IP, minor corrections, and content added.
Second Edition	02/08	Added Recipe backup/restore, Omron Ethernet & Siemens
Rev. A	07/08	Added Mitsubishi drivers, minor corrections.
Rev. B	10/08	Added CLICK and Siemens S7-200 Ethernet drivers.
Rev. C	04/09	Added tightening torque, battery note, enclosure and environment specs. Added Remote Access feature. Added EA-CF-CARD.
Rev. D	10/09	Added EA7-T6CL-R and EA7-T6CL

TABLE OF CONTENTS

Chapter 1: Getting Started 1–1

Introduction 1–2

Conventions Used 1–3

Mounting Clips – New Style 1–3

Product Overview 1–4

Part Number Key – Touch Panels 1–5

EZTouch Conversion and Mounting 1–6

EZTouch Touch Panel Cross Reference to C-more 1–7

Quick Start Steps 1–9

Step 1 – Unpack and Inspect 1–9
Step 2 – Assemble Temporary Support Stand 1–10
Step 3 – Install Optional Hardware Accessories 1–11
Step 4 – Become Familiar with Available Communication Ports 1–12
Step 5 – Install the Programming Software and Develop a Project 1–13
Step 6 – Connect Touch Panel to Computer 1–14
Step 7 – Provide Power to the Touch Panel 1–15
Step 8 – Access the Touch Panel Setup Screens 1–16
Step 9 – Choose Touch Panel to PLC Protocol & Cables 1–17
Step 10 – Connect Touch Panel to PLC 1–20

Chapter 2: Specifications 2–1

Available Models 2–2

Model Specifications 2–3

6″ Base Feature Models 2–4
6″ Full Feature Models 2–5
6″ Obsolete Models 2–6

8" and 10" Full Feature Models 2–8
12" and 15" Full Feature Models 2–9

EA7-S6M-R, S6C-R, T6CL-R, S6M, S6C, T6C, T6CL (Dimensions and Ports & Memory Exp.) 2–10

EA7-T8C (Dimensions and Ports & Memory Exp.) 2–12

EA7-T10C (Dimensions and Ports & Memory Exp.) 2–14

EA7-T12C (Dimensions and Ports & Memory Exp.) 2–16

EA7-T15C (Dimensions and Ports & Memory Exp.) 2–18

Mounting Clearances 2–20

Communications Ports 2–21

Audio WAV File Specifications 2–23

Memory Organization 2–24

Handling External Memory Devices 2–25

Power Loss Detection and Power Retention Period 2–26

Data Logging Function and Logging Media 2–26

Data Logging - Memory Device Full 2–26

Chemical Compatibility 2–27

Chapter 3: Accessories 3–1

Accessories 3–2

Accessories Overview 3–3

Accessories at a Glance 3–4

AC/DC Power Adapter – EA-AC 3–5

Expansion Assembly – EA-EXP-OPT 3–9

CF Card Interface Module – EA-CF-IF 3–12

CompactFlash Memory – EA-CF-CARD 3–14

6" Adapter Plate – EA-6-ADPTR 3–17

D-SUB 15-pin 90 degree Comm Port Adapter – EA-ADPTR-4 3–19

D-SUB 15-pin to Terminal Block Adapter – EA-COMCON-3 3–20
Non-glare Screen Covers – EA-xx-COV2, xx = 6, 8, 10, 12 or 15 3–22
USB Pen Drive – SDCZ4-2048-A10 3–24

Chapter 4: Installation and Wiring 4–1
Safety Guidelines 4–2
Introduction 4–3
EA7-S6M-R, S6C-R, T6CL-R, S6M, S6C, T6C, T6CL – Cutout Dimensions 4–4
EA7-T8C – Cutout Dimensions 4–5
EA7-T10C – Cutout Dimensions 4–6
EA7-T12C – Cutout Dimensions 4–7
EA7-T15C – Cutout Dimensions 4–8
6″ Adapter Plate – EA-6-ADPTR 4–9
Mounting Clearances 4–11
Wiring Guidelines 4–12
Agency Approvals 4–12
Marine Use 4–12
Providing Power to the Touch Panel 4–13
DC Wiring Diagram 4–13
AC Wiring Diagram (EA-AC) 4–14

Chapter 5: System Setup Screens 5–1
Introduction 5–2
Chapter Organization 5–3
Accessing the System Setup Screens (no project loaded) 5–4
Accessing the System Setup Screens (with project loaded) 5–5
System Setup Screens – Enable Password in Software 5–7
System Setup Screens Flowchart 5–13
Main Menu 5–14
Information Menu 5–15
Setting Menu 5–19

Test Menu 5–25

Memory Menu 5–35

Chapter 6: PLC Communications 6–1

Introduction 6–2

DirectLOGIC PLCs Password Protection 6–2

PLC Communication Cables & Wiring Diagrams 6–5

PLC Communication Cables & Wiring Diagrams 6–6

AutomationDirect PLCs RS-232C Serial: 6–7
Direct LOGIC PLCs RS-422A/RS-485A: 6–10
Direct LOGIC Universal Isolated Network Adapter, p/n FA-ISOCON: 6–14
Direct LOGIC Universal Converter, p/n F2-UNICON: 6–15
RS-422A/RS-485A Multi-Drop Wiring Diagram Examples 6–16
Allen-Bradley: 6–20
GE: 6–24
GE VersaMax Micro: 6–24
Mitsubishi: 6–24
Omron: 6–26
Modicon ModBus RS-232: 6–27
Modicon Micro Series: 6–27
Modicon ModBus with RJ45: 6–27
Siemens: 6–28

Chapter 7: Maintenance 7–1

Project Backup 7–2

Check Operating Environment 7–2

Check Operating Voltage 7–2

Check Status Indicators 7–2

Check Physical Conditions 7–3

Run Tests under System Setup Screens 7–3

Check Memory Usage via System Setup Screens 7–4

Check/Adjust Display Brightness or Contrast 7–4

Check Error Log via System Setup Screens 7–4
Adjust Touch Panel via System Setup Screens 7–4
Replace Battery Periodically 7–5
Cleaning the Display Screen 7–5
Check Project Functionality 7–6
Checks from *C-more* Programming Software 7–6

Chapter 8: Troubleshooting 8–1
Common Problems 8–2
Toubleshooting Flow Chart 8–3
Touch Panel does not Power up 8–4
Display is Blank 8–5
Display is Dim 8–6
No User Program 8–7
No Communications between Panel and PC (Personal Computer) 8–8
No Communications between Panel and PLC 8–13
IP Address in System Setup Screens displays 0.0.0.0 8–16
Difficulty Connecting to the Panel over the Internet (Web server and Remote Access features) 8–17
PLC Protocol Error Codes 8–18
Touch Panel Runtime Errors 8–19
Panel Constantly Displays “Initializing” when Powering up 8–20
Data not Logging Problems 8–20
Loss of Date/Time and Retentive Data 8–21
Electrical Noise Problems 8–21

Chapter 9: Replacement Parts 9–1
Replacement Parts Overview 9–2
Replacement Parts at a Glance 9–2
Battery Replacement & Installation Instructions 9–3

6″ Panel Mounting Clip Replacements & Installation 9–5
8-15″ Panel Mounting Clip Replacements & Installation 9–6
DC Panel Power Connector Replacement 9–7
AC Power Adapter Connector Replacement 9–7
8-15″ Panel Backlight Bulb Replacements & Installation 9–8
6-15″ Panel Gasket Replacement & Installation 9–11
8-15″ Panel Bezel Replacement & Installation 9–12
6″ Adapter Plate Gasket Replacement & Installation 9–14

Appendix A: PLC Protocol Error Codes A–1
Introduction A-2
C-more Touch Panel Error Code Table A-3
DirectLOGIC – Panel Error Code PLC-499 Explanation A-5
DirectLOGIC K-Sequence Protocol – PLC Error Code Table A-5
DirectLOGIC DirectNET Protocol – PLC Error Codes A-5
Modbus Protocols Error Code P499 Explanation A-6
AutomationDirect CLICK A-6
AutomationDirect DirectLOGIC - Modbus (Koyo) A-6
Modicon Modbus RTU A-6
Entivity Modbus RTU A-6
DirectLOGIC ECOM Protocol – PLC Error Codes A-6
Allen-Bradley – Panel Error Code PLC-499 Explanation A-7
Allen-Bradley DF1 & DH485 Protocols – PLC Error Code Tables A-8
Allen-Bradley EtherNet/IP Protocol –Panel Error Code PLC-496, 497 and 498 Explanation A-10
Allen-Bradley – EtherNet/IP Protocol – PLC Error Code TablesControlLogix, CompactLogix, & FlexLogix A-11
Allen-Bradley – EtherNet/IP Protocol – PLC Error Code TablesMicroLogix 1100, 1400 & SLC 5/05, both via native Etherne-9t port;MicroLogix 1000, 1100, 1200, 1400, 1500, SLC 5/03/04/05, all via ENI Adapter A-15
Generic EtherNet IP Protocol – PLC Error Codes A-20

GE 90-30 – Panel Error Code PLC-499 Explanation A-21
GE 90-30 SNPX Protocol – PLC Error Code Tables A-22
Mitsubishi FX Protocol – PLC Error Codes A-31
Omron – Panel Error Code PLC-499 Explanation A-31
Omron Host Link Protocol – PLC Error Code Table A-32
Omron FINS Protocol – PLC Error Code Table A-33
Omron – Panel Error Code P495 Explanation A-36
Omron CS/CJ FINS Ethernet Protocol – PLC Error Code Table A-37
Siemens – Panel Error Code P499 Explanation A-38
Siemens PPI Protocol – PLC Error Code Table A-39
Siemens ISO over TCP Protocol – PLC Error Code Table A-40

Appendix B: Touch Panel Runtime Errors B–1
Introduction B–2
Runtime Errors B–3

Appendix C: Mounting Clips Prior April 2006 . . . . . .C–1
Introduction C–2
EA7-S6M-R, S6C-R, S6M, S6C & T6C C–3
EA7-T8C C–5
EA7-T10C C–7
EA7-T12C C–9
EA7-T15C C–11

Index

GETTING STARTED

CHAPTER 1

In This Chapter...

Introduction 1–2

Conventions Used 1–3

Mounting Clips – New Style 1–3

Product Overview 1–4

Part Number Key – Touch Panels 1–5

EZTouch Conversion and Mounting 1–6

EZTouch Touch Panel Cross Reference to C-more 1–7

Quick Start Steps 1–9

Step 1 – Unpack and Inspect 1–9

Step 2 – Assemble Temporary Support Stand 1–10

Step 3 – Install Optional Hardware Accessories 1–11

Step 4 – Become Familiar with Available Communication Ports 1–12

Step 5 – Install the Programming Software and Develop a Project 1–13

Step 6 – Connect Touch Panel to Computer 1–14

Step 7 – Provide Power to the Touch Panel 1–15

Step 8 – Access the Touch Panel Setup Screens 1–16

Step 9 – Choose Touch Panel to PLC Protocol & Cables 1–17

Step 10 – Connect Touch Panel to PLC 1–20

1

Introduction

The Purpose of this Manual

Thank you for purchasing our *C-more*® Touch Panel family of products. This manual describes AutomationDirect.com's *C-more* Touch Panels, their specifications, included components, available accessories and provides you with important information for installation, connectivity and setup. The manual shows you how install, wire and use the products. It also helps you understand how to interface the panels to other devices in a control system.

This user manual contains important information for personnel who will install the touch panels and accessories, and for the personnel who will be programming the panel. If you understand control systems that make use of operating interfaces such as the *C-more* touch panels, our user manuals will provide all the information you need to get, and keep your system up and running.

Supplemental Manuals

If you are familiar with industrial control type devices, you may be able to get up and running with just the aide of the Quick Start Guide that is included with each touch panel. You can also refer to the On-line help that is available in the *C-more* programming software for more information about programming the panel. The accessories include data sheets that will help with installing the accessories.

Technical Support

We strive to make our manuals the best in the industry. We rely on your feedback to let us know if we are reaching our goal. If you cannot find the solution to your particular application, or, if for any reason you need technical assistance, please call us at:

770–844–4200

Our technical support group will work with you to answer your questions. They are available Monday through Friday from 9:00 A.M. to 6:00 P.M. Eastern Time. We also encourage you to visit our web site where you can find technical and non-technical information about our products and our company.

http://cmore.automationdirect.com

If you have a comment, question or suggestion about any of our products, services, or manuals, please fill out and return the 'Suggestions' card that was included with this manual.

Conventions Used

*When you see the "notepad" icon in the left-hand margin, the paragraph to its immediate right will be a special note. The word **NOTE:** in boldface will mark the beginning of the text.*

When you see the "exclamation mark" icon in the left-hand margin, the paragraph to its immediate right will be a warning. This information could prevent injury, loss of property, or even death (in extreme cases). The word WARNING: in boldface will mark the beginning of the text.

Key Topics for Each Chapter

The beginning of each chapter will list the key topics that can be found in that chapter.

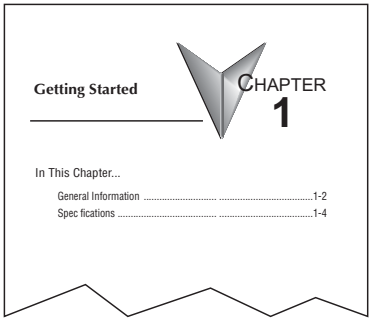

Mounting Clips – New Style

***NOTE: C-more** touch panels shipped prior to approximately **April 2006** had a slightly different mounting clip design. All of the drawings and illustrations in this issue of the Hardware User Manual are shown with the newer design. **Appendix C: Mounting Clips Prior April 2006** contains drawings and illustrations of the original designed mounting clips for your reference.*

Product Overview

Some of the features designed into the product to provide excellent hardware and software are listed below.

- Analog touch screen (no touch cell boundaries)
- Plenty of memory and methods to get data in/out of the panel
- Overlapping active devices on the touch screen
- 65,536 colors for enhanced graphics
- Screen resolutions up to 1024 X 768 pixels
- Built-in project simulation; test on PC while developing
- Serial RS232, RS422/485 and Ethernet 10/100Base-T communications (Ethernet available on full feature units only.)
- Programming via USB or Ethernet (Ethernet available on full feature units only.)
- Optional AC/DC power adapter (EA-AC)
- User replaceable bulbs and bezels on 8”, 10”, 12” and 15” panels
- Animation of bitmaps and objects
- 4,000 built-in symbols, classic fonts: 6x8, 8x16, 8x32, 8x64, 16x16, 16x32, 16x64, 32x16, 32x32, 32x64, and Windows fonts
- PID face plate, trending, alarming and a recipe database
- Event Manager to trigger actions based on assigned state changes, schedules, PLC tag names, etc. setup in a database environment. The event can also trigger a sound byte, initiate a screen capture, send a data file (FTP), send an E-mail, etc.
- Select unique background screens for each created screen
- Trend Data logging
- Internet Remote Access
- Built-in FTP client/server, E-mail client, and Web server
- Audio output port - stereo, requires amplifier and speaker(s)

Part Number Key – Touch Panels

The *C-more* touch panel part numbers consist of the following key:

Screen Size:
- 6: 5.7”
- 8: 8.4”
- 10: 10.4”
- 12: 12.1”
- 15: 15.0”

Features:
- L: LED

Features:
- blank: Full
- R: Base

EA7-xxxx-x

LCD Type:
- S: STN
- T: TFT

Color:
- C: Color
- M: Grayscale

Product label examples:

EA7-T6CL-R

EA7-T15C

Serial Number and Date Code formats:

Serial Number = [Part Number]+[**YYMDDFNNN**]

Date Code = **YYMF**

- **YY:** Year (05–99 --- e.g. 05 = 2005)
- **M:** Month (1–9, X, Y, Z --- e.g. X = Oct.)
- **DD:** Day (1–31)
- **F:** Manufacturing Site (0–9, A–Z)
- **NNN:** Sequence number for the date listed (000–999)

EZTouch Conversion and Mounting

C-more panels are a drop-in replacement for **EZTouch** panels from ***AutomationDirect***. They fit the same panel cutout*. The ***C-more*** software will convert your legacy **EZTouch** project (created with EZTouch Edit ver. 3.1a) automatically with no changes to the project required.** Just open your old **EZTouch** project in the new ***C-more*** Programming Software, connect the USB cable, and click "Send to Panel". The conversion is automatic and you will benefit immediately from:

- A better looking display
- A brighter screen
- Longer backlight bulb life
- Wider temperature tolerance
- A two year warranty

Note: *EZTouch projects most have been created with EZTouch Edit software version 3.1a to assure proper project conversion.*

Now, there are hundreds of new features you may want to take advantage of, but it's nice to know that you can be up and running your existing **EZTouch** project in just a few minutes.

C-more accepts the same PLC communications and networking cables that you are using with **EZTouch**. The 24 VDC power connections accept the same DC wiring that you used for **EZTouch**, and now there is a removable terminal block connector. Only the programming cable is different - you no longer have to buy a proprietary serial cable to program your touch panel. *C-more* uses a standard USB cable or an Ethernet (CAT5) connection for programming.

* If you have an old 6" non-slim bezel **EZTouch** panel you will need our 6" Adapter Plate, part number EA-6-ADPTR, see the chapter on accessories.

** The project conversion utility is a great feature. However the user must take full responsibility in ensuring the conversion works to their satisfaction.

Example of a C-more 6" touch panel mounted into an existing EZTouch non-slim bezel cutout using the C-more 6" adapter plate.

EZTouch Touch Panel Cross Reference to *C-more*

EZTouch			*C-more**
EZTouch 6”, grayscale STN (0–45 °C)		*C-more* 6” Adapter	*C-more* 6”, grayscale STN (0–50 °C)
EZ-S6M-R	Requires:	EA-6-ADPTR	EA7-S6M-R
EZ-S6M-RS			
EZ-S6M-F	Requires:	EA-6-ADPTR	EA7-S6M (includes Ethernet)
EZ-S6M-FS			

EZTouch			*C-more**
EZTouch 6”, 128 Color STN (0–45 °C)		*C-more* 6” Adapter	*C-more* 6”, 65,536 Color TFT (0–50 °C)
EZ-S6C-K	Requires:	EA-6-ADPTR	EA7-T6CL-R
EZ-S6C-KS			
EZ-S6C-F	Requires:	EA-6-ADPTR	EA7-T6CL (includes Ethernet)
EZ-S6C-FS			
EZ-S6C-FST			

EZTouch	*C-more**
EZTouch 8”, 128 Color STN (0–40 °C)	*C-more* 8”, 65,536 Color TFT (0–50 °C)
EZ-S8C-F	EA7-T8C (includes Ethernet)
EZ-S8C-FS	
EZ-S8C-FST	

***Note**: All **C-more** touch panels meet UL type 4X when mounted on a flat surface of a type 4X indoor use only enclosure. Non-FDA*

EZTouch Touch Panel Cross Reference to *C-more* (cont'd)

EZTouch	*C-more**
EZTouch 10", 128 Color TFT (0–50 °C)	*C-more* 10", 65,536 Color TFT (0–50 °C)
EZ-S10C-F	EA7-T10C (includes Ethernet)
EZ-T10C-FS	
EZ-T10C-FST	
EZ-T10C-FSE	

EZTouch	*C-more**
No 12" EZTouch available	*C-more* 12", 65,536 Color TFT (0–50 °C)
	EA7-T12C (includes Ethernet)

EZTouch	*C-more**
EZTouch 15", 128 Color TFT (0–45 °C)	*C-more* 15", 65,536 Color TFT (0–50 °C)
EZ-T15C-FS	EA7-T15C (includes Ethernet)
EZ-T15C-FST	
EZ-T15C-FSE	

***Note**: All **C-more** touch panels meet UL type 4X when mounted on a flat surface of a type 4X indoor use only enclosure. Non-FDA*

Quick Start Steps

Step 1 – Unpack and Inspect

a.) Unpack the *C-more* Touch Panel from its shipping carton. Included in the carton are the following:

- *C-more* Touch Panel
- cutout template
- mounting clips
- temporary support stand
- DC power connector
- gasket
- Quick Start Guide, p/n EA-QSG

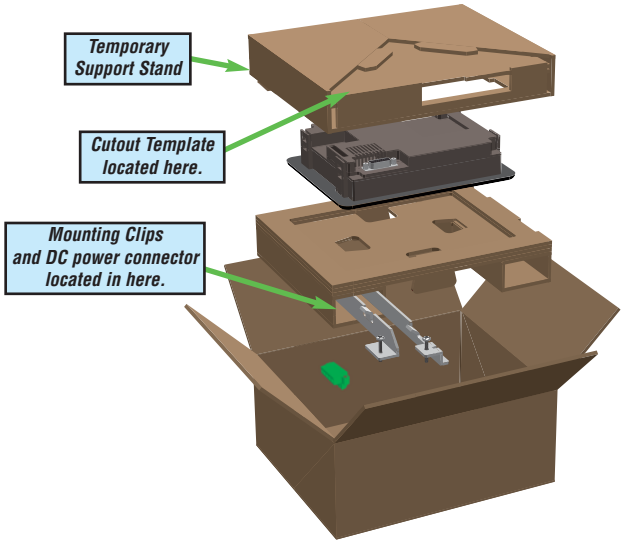

b.) Unpack any accessories that have been ordered, such as: AC/DC Power Adapter, Expansion Assembly, CompactFlash memory, programming cable, communications cable, etc.

c.) Inspect all equipment for completeness. If anything is missing or damaged, immediately call the *AutomationDirect*® returns department @ 1-800-633-0405.

Shipping Carton Contents

Optional Accessories

AC Power Adapter
EA-AC

Expansion Assembly
EA-EXP-OPT

Compact Flash Card
EA-CF-CARD

2gb USB Pen Drive
SDCZ4-2048-A10

Step 2 – Assemble Temporary Support Stand

6“ & 8” Touch Panel – Temporary Stand

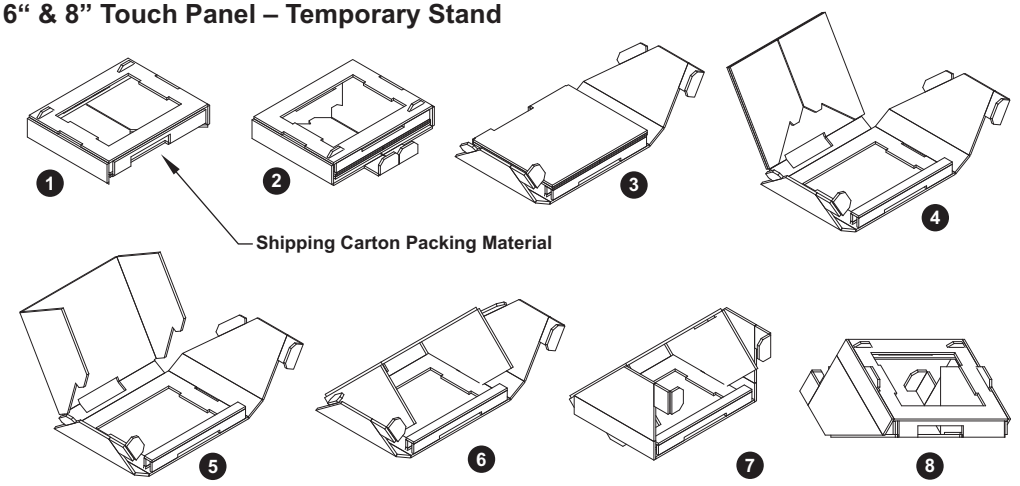

10”, 12“ & 15” Touch Panel – Temporary Stand

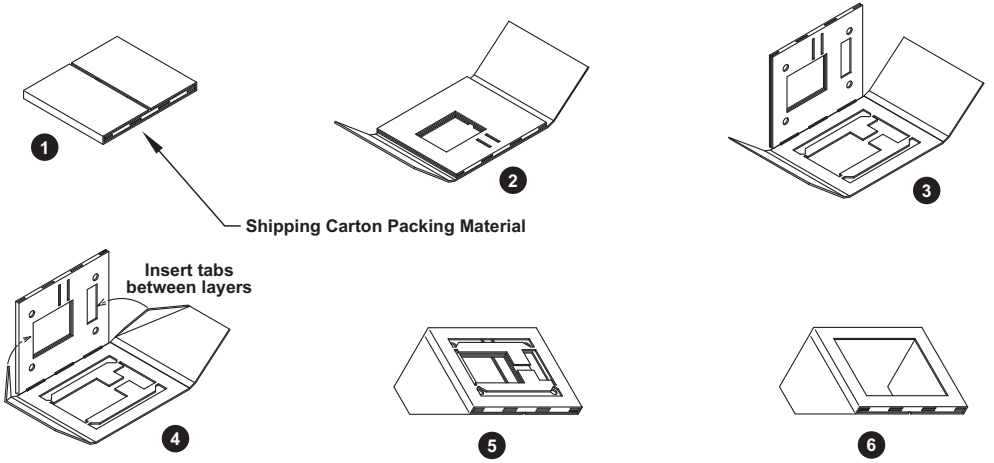

***NOTE**: See **Chapter 4: Installation and Wiring** for **C-more** touch panel installtion information including cutout dimensions and mounting clearances.*

Step 3 – Install Optional Hardware Accessories

***NOTE**: CompactFlash memory card designations – **CF Slot #1** is at the top of the panel and **CF Slot #2** is the CF Card Interface Module, p/n EA-CF-IF.*

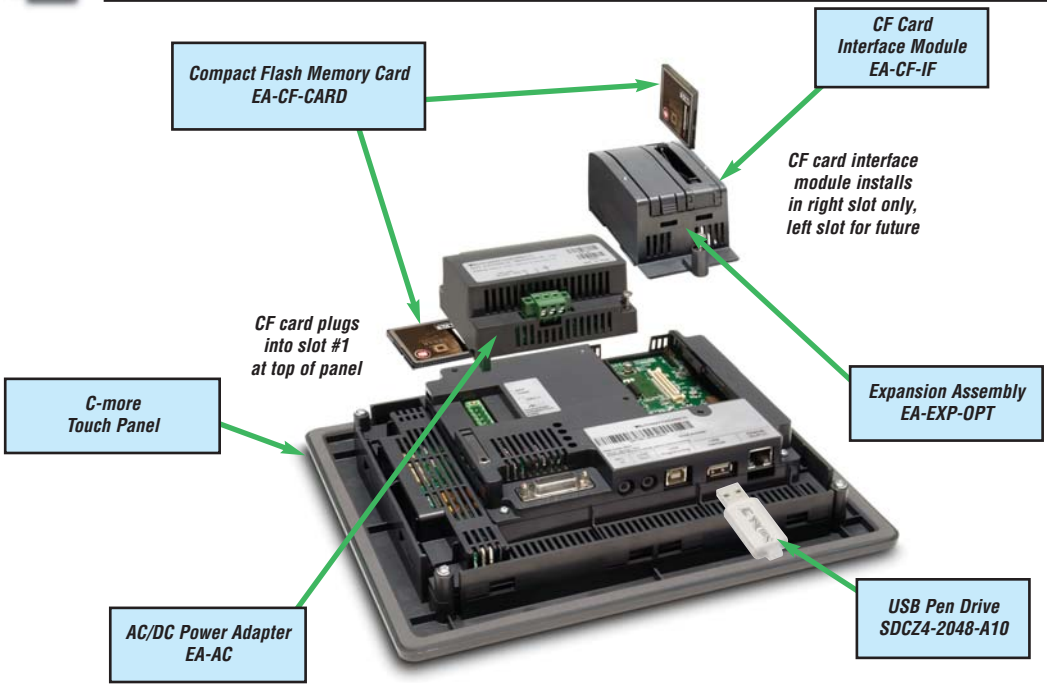

***NOTE**: The **C-more** 6" touch panels will fit into the existing cutout of any **EZTouch** 6" slim bezel panel. Use the **C-more** 6" Adapter Plate, p/n EA-6-ADPTR, to install **C-more** 6" panels into existing cutouts of **EZTouch** 6" non-slim (rounded bezel) panels.*

Optional Accessories

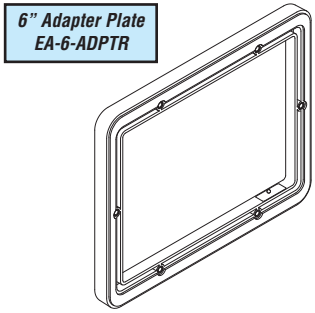

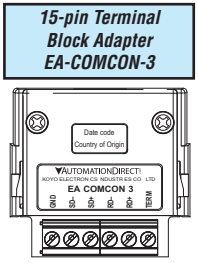

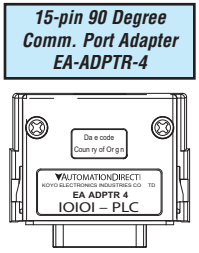

Step 4 – Become Familiar with Available Communication Ports

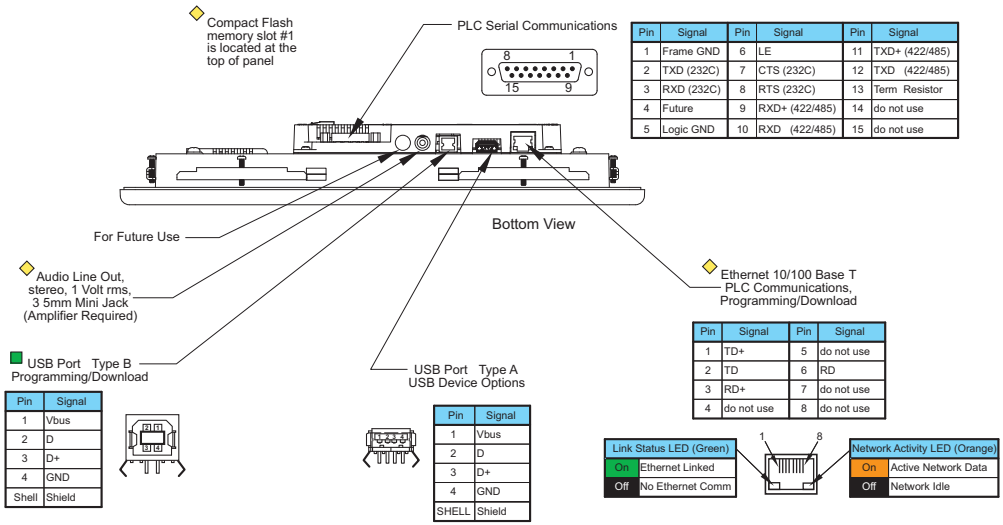

Pin	Signal	Pin	Signal	Pin	Signal
1	Frame GND	6	LE	11	TXD+ (422/485)
2	TXD (232C)	7	CTS (232C)	12	TXD (422/485)
3	RXD (232C)	8	RTS (232C)	13	Term Resistor
4	Future	9	RXD+ (422/485)	14	do not use
5	Logic GND	10	RXD (422/485)	15	do not use

Pin	Signal
1	Vbus
2	D
3	D+
4	GND
Shell	Shield

Pin	Signal
1	Vbus
2	D
3	D+
4	GND
SHELL	Shield

Pin	Signal	Pin	Signal
1	TD+	5	do not use
2	TD	6	RD
3	RD+	7	do not use
4	do not use	8	do not use

Link Status LED (Green)	
On	Ethernet Linked
Off	No Ethernet Comm

Network Activity LED (Orange)	
On	Active Network Data
Off	Network Idle

Note Device is not available on Base Feature touch panels, part numbers EA7 S6M R and EA7 T6CL R

Note Use USB Programming Cable, for example p/n USB CBL AB15

***Note**: See **Chapter 2: Specifications** and **Chapter 6: PLC Communications** for additional details on the available communication ports, protocols and cables.*

Step 5 – Install the Programming Software and Develop a Project

Following are the minimum system requirements for running *C-more* Programming Software, p/n EA-PGMSW, on a PC:

- Personal Computer with a 333 MHz or higher processor (CPU) clock speed recommended; Intel® Pentium/Celeron family, or AMD® K6/Athlon/Duron family, or compatible processor recommended
- Keyboard and Mouse or compatible pointing device
- Super VGA color video adapter and monitor with at least 800 x 600 pixels resolution (1024 x 768 pixels recommended)
  64K color minimum
- 300 MB free hard-disk space
- 128 MB free RAM (512 MB recommended); 512 MB free RAM (1 GB recommended) for Vista
- CD-ROM or DVD drive for installing software from the CD
- USB port or Ethernet 10/100 Mbps port for project transfer from software to touch panel (Ethernet port not available on -R models)
- Operating System - Windows® XP Home / Professional Edition Service Pack 2 , Windows® 2000 with Service Pack 4 or Vista® (32 bit)

Insert the supplied CD-ROM into the PC's CD-ROM drive and follow the instructions. If you need assistance during the software installation, please refer to the supplied Software Installation Guide or call the AutomationDirect Technical Support team @ 770-844-4200.

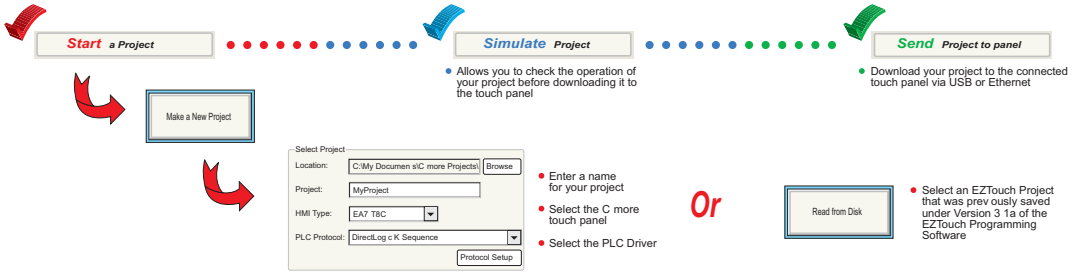

Step 6 – Connect Touch Panel to Computer

- **Connect** a USB Programming Cable, such as p/n USB-CBL-AB15, from an USB type A port on the PC to the USB type B programming port on the *C-more* touch panel
- **or** connect the *C-more* touch panel and PC together via an Ethernet hub or switch, and CAT5 Ethernet cables (full feature panels only)
- **or** use an Ethernet crossover cable directly between the *C-more* touch panel Ethernet port and the PC Ethernet port (full feature panels only)

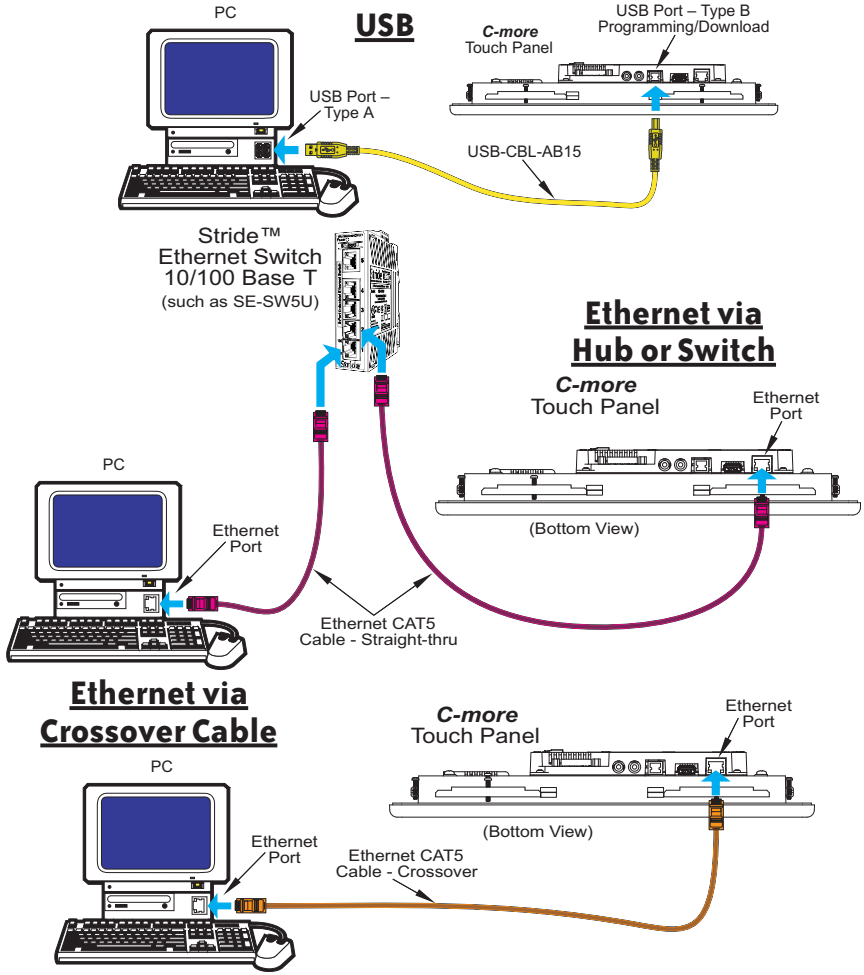

NOTE: On power up, the touch panel will either copy the project from its internal Flash memory to its internal SDRAM memory and run the project, or if a CompactFlash memory card is plugged into the CF1 slot, then any project contained on the CF memory card will be copied to the panel's internal SDRAM memory and be run. The memory of a CompactFlash card on CF1 will override the panel's internal Flash memory on power up or reboot, even if the CompactFlash memory card does not contain a project.

Step 7 – Provide Power to the Touch Panel

- **Connect** a **dedicated** 24 VDC (20.4 - 28.8 VDC) switching power supply rated at a minimum of 1.5 A to the DC connector on the rear of the *C-more* touch panel, include wiring the ground terminal to a proper equipment ground
- **or** install a *C-more* AC/DC Power Adapter, EA-AC, to the rear of the touch panel and connect an AC voltage source of 100-240 VAC, 50/60Hertz, to its AC connector (see note below)
- **then** turn on the power source and check the LED status indicators on the rear of the *C-more* touch panel for proper indication

NOTE: The AC/DC Power Adapter, EA-AC, is for *C-more* touch panels only. The adapter is powered from a 100-240 VAC, 50/60 Hertz power source. The adapter provides 24 VDC @ 1.5 A. Power Fault features help protect data being logged to CompactFlash during power failures. The *C-more* panel must have firmware version 1.21 Build 6.18E or higher for proper operation.

DC Wiring

Recommended DC Supply Fuse		
Panel Size	Rating	ADC p/n
6" – 10"	2.5 A	MDL2-5
12" & 15"	4.0 A	MDL4

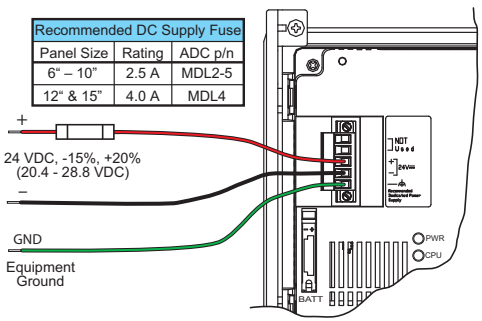

WARNING: The AC/DC Power Adapter is not recommended for use with the EA7-T15C touch panel when operating temperatures are expected to exceed 40 °C [104 °F].

AC Wiring

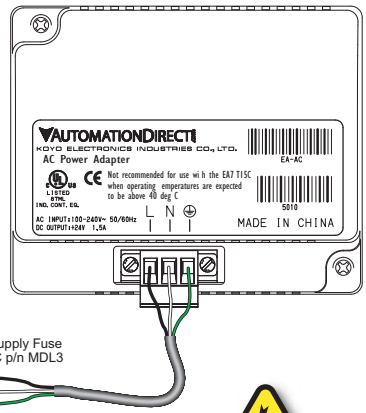

Tightening Torque	
Power supply cable torque	71 - 85 oz-in (0.5 - 0.6 Nm)
Power connector mounting torque	71 - 85 oz-in (0.5 - 0.6 Nm)
Mounting flange screw torque	57 - 71 oz-in (0.4 - 0.5 Nm)

NOTE: Use 60 / 75 °C copper conductors only.

C-more LED Status Indicators

CPU Status LED (Green, Orange & Red)	
Off	Power Off
Green	Normal – CPU Run State
Red	Memory Error
Blinking Red	Operating System not found
Blinking Orange	LCD Backlight Failure
Blinking Green	Power Loss Detection

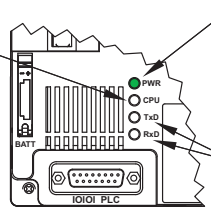

Rear View

Power LED (Green)	
On	Power On
Off	Power Off

Serial TxD/RxD LED (Green)	
On	Comm. is active
Off	No communication

Step 8 – Access the Touch Panel Setup Screens

- Access the Main Menu of the touch panel System Setup Screens by pressing the extreme upper left corner of the panel display area for three (3) seconds as shown below.
- Adjust the time and date for the panel by pressing the Setting button on the Main Menu, then press the Adjust Clock button on the Setting screen.
- Use the right pointing arrows for the time or date display to select the unit to change. Use the up and down arrows to increment or decrement the value for the selected unit.
- Press OK when done to accept the changes to the time and date that is retained in the touch panel's battery backed memory, or press Cancel to exit the Adjust Clock setup screen without making any changes.
- Press the Main Menu button on the Setting screen and then the Exit button on the Main Menu screen to return to the application screen.

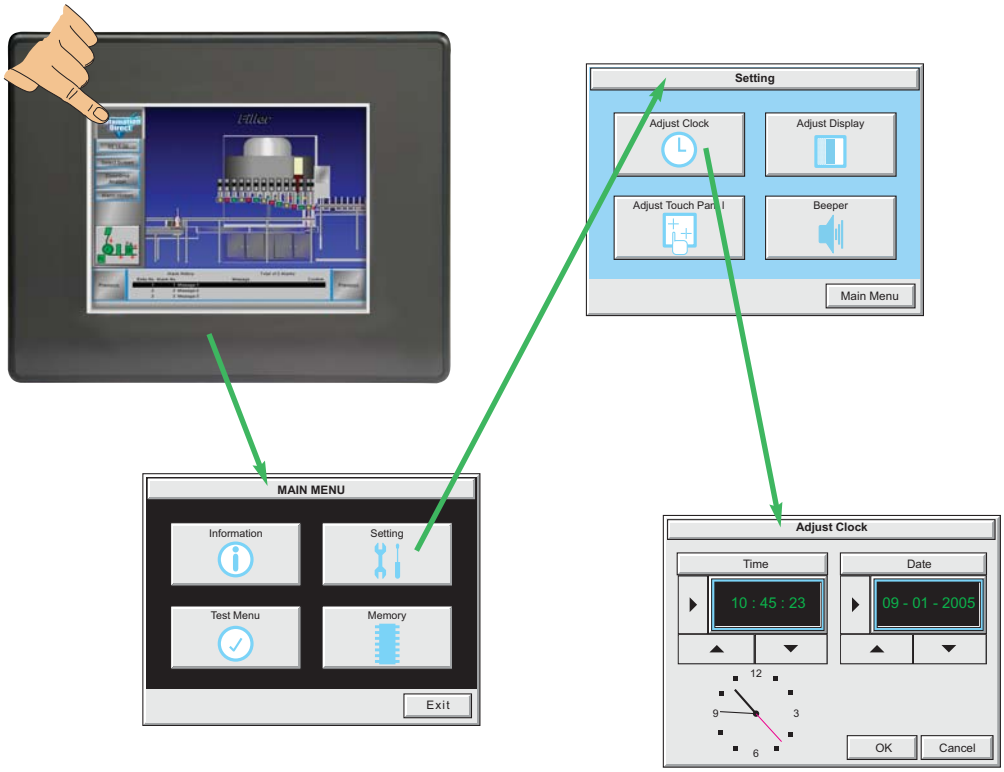

***Note**: When using an Ethernet connection, by default the panel is set for DHCP IP addressing. If it can not find a DHCP server, the panel will automatically assign an IP address. The IP address can be changed by the user from the programming software or by accessing the IP address setting screen as shown on page 5-19 and detailed on page 5-24. See **Chapter 5 - System Setup Screens** for details on other setup screen settings and functions.*

Step 9 – Choose Touch Panel to PLC Protocol & Cables

PLC Compatibility Table			
PLC Family	**Model**		**Protocols**
CLICK	all		AutomationDirect Modbus (CLICK)
AutomationDirect *Direct*LOGIC	DL05/DL06	all	K-Sequence
			*Direct*NET
			Modbus (Koyo addressing)
		H0-ECOM/H0-ECOM100	*Direct*LOGIC Ethernet
	DL105	all	K-Sequence
	DL205	D2-230	K-Sequence
		D2-240	K-Sequence
			*Direct*NET
		D2-250/D2-250-1/D2-260	K-Sequence
			*Direct*NET
			Modbus (Koyo addressing)
		D2-240/D2-250-1/D2-260 Using DCM	*Direct*NET
			Modbus (Koyo addressing)
		H2-ECOM/H2-ECOM100	*Direct*LOGIC Ethernet
	DL305	D3-330/330P (Requires the use of a Data Communications Unit)	*Direct*NET
		D3-340	*Direct*NET
		D3-350	K-Sequence
			*Direct*NET
			Modbus (Koyo addressing)
		D3-350 DCM	*Direct*NET
			Modbus (Koyo addressing)
	DL405	D4-430	K-Sequence
			*Direct*NET
		D4-440	K-Sequence
			*Direct*NET
		D4-450	K-Sequence
			*Direct*NET
			Modbus (Koyo addressing)
		All with DCM	*Direct*NET
			Modbus (Koyo addressing)
		H4-ECOM/H4-ECOM100	*Direct*LOGIC Ethernet
	H2-WinPLC (Think & Do) Live V5.2 or later and Studio any version		Think & Do Modbus RTU (serial port)
	H2-WinPLC (Think & Do) Live V5.5.1 or later and Studio V7.2.1 or later		Think & Do Modbus TCP/IP (Ethernet port)

PLC Compatibility Table continued on the next page.

Step 9 – Choose Touch Panel to PLC Protocol & Cables (cont'd)

PLC Compatibility Table (cont'd)		
PLC Family	**Model**	**Protocols**
Allen-Bradley	MicroLogix 1000, 1100, 1200, 1400, 1500, SLC 5-01/02/03, PLC5	DH485/AIC/AIC+
	MicroLogix 1000, 1100, 1200, 1400, 1500	DF1 Half Duplex; DF1 Full Duplex
	SLC 5-03/04/05	
	ControlLogix™, CompactLogix™, FlexLogix™	
	PLC-5	DF1 Full Duplex
	ControlLogix, CompactLogix, FlexLogix - Tag Based	DF1 Half Duplex; DF1 Full Duplex
	ControlLogix, CompactLogix, FlexLogix - Generic I/O Messaging	EtherNet/IP Server
	ControlLogix, CompactLogix, FlexLogix - Tag Based	EtherNet/IP Client
	MicroLogix 1100, 1400, SLC 5/05, both via native Ethernet port	
	MicroLogix 1000, 1100, 1200, 1400, 1500, SLC 5-03/04/05, all via ENI adapter	
Modbus TCP/IP	Modbus TCP/IP devices	Modbus TCP/IP
GE	90/30, 90/70. Micro 90, VersaMax Micro	SNPX
Mitsubishi	FX Series	FX Direct
	Q02, Q02H, Q06H, Q12H, Q25H	Q CPU
	Q, QnA Serial	QnA Serial
	Q, Qna Ethernet	QnA Ethernet
Omron	C200 Adapter, C500	Host Link
	CJ1/CS1 Serial	FINS
	CJ1/CS1 Ethernet	
Modicon	984 CPU, Quantum 113 CPU, AEG Modicon Micro Series 110 CPU: 311-xx, 411-xx, 512-xx, 612-xx	Modbus RTU
Siemens	S7-200 CPU, RS-485 Serial	PPI
	S7-200 CPU, S7-300 CPU; Ethernet	Ethernet ISO over TCP

Step 9 – Choose Cables continued on next page.

Step 9 – Choose Touch Panel to PLC Protocol & Cables (cont'd)

Purchased Cable Description	Cable Part Number
AutomationDirect CLICK, *Direct*LOGIC PLC RJ-12 port, DL05, DL06, DL105, DL205, D3-350, D4-450 & H2-WINPLC (RS-232C)	**EA-2CBL**
*Direct*LOGIC (VGA Style) 15-pin port DL06, D2-250 (250-1), D2-260 (RS-232C)	**EA-2CBL-1**
*Direct*LOGIC PLC RJ-11 port, D3-340 (RS-232C)	**EA-3CBL**
*Direct*LOGIC DL405 PLC 15-pin D-sub port, DL405 (RS-232C)	**EA-4CBL-1**
*Direct*LOGIC PLC 25-pin D-sub port, DL405, D3-350, DL305 DCU and all DCM's (RS-232C)	**EA-4CBL-2**
Allen-Bradley MicroLogix 1000, 1100, 1200, 1400, 1500 (RS-232C)	**EA-MLOGIX-CBL**
Allen-Bradley SLC 5-03/04/05, ControlLogix, CompactLogix, FlexLogix DF1 port (RS-232C)	**EA-SLC-232-CBL**
Allen-Bradley PLC-5 DF1 port (RS-232C)	**EA-PLC5-232-CBL**
Allen-Bradley MicroLogix, SLC 5-01/02/03, PLC5 DH485 port (RS-232C)	**EA-DH485-CBL**
GE 90/30, 90/70, Micro 90, VersaMax Micro 15-pin D-sub port (RS-422A)	**EA-90-30-CBL**
MITSUBISHI FX Series 25-pin port (RS-422A)	**EA-MITSU-CBL**
MITSUBISHI FX Series 8-pin mini-DIN (RS-422A)	**EA-MITSU-CBL-1**
OMRON Host Link (C200 Adapter, C500) (RS-232C)	**EA-OMRON-CBL**

NOTE 1: *The above list of pre-made communications cables may be purchased. See* ***Chapter 6: PLC Communications*** *for wiring diagrams of additonal* ***user constructed cables****. Chapter 6 also includes wiring diagrams for the pre-made cables.*

NOTE 2: *EZTouch serial PLC communication cables are compatible with* ***C-more*** *touch panels.*

Pre-made cable examples

EA-2CBL

EA-2CBL-1

Step 10 – Connect Touch Panel to PLC

- Connect the serial communications cable between the *C-more* touch panel and the PLC
- or connect the *C-more* touch panel and PLC together via an Ethernet hub or switch, and CAT5 Ethernet cables (full feature panels only)
- or use an Ethernet crossover cable directly between the *C-more* Ethernet port and the PLC Ethernet port (full feature panels only)

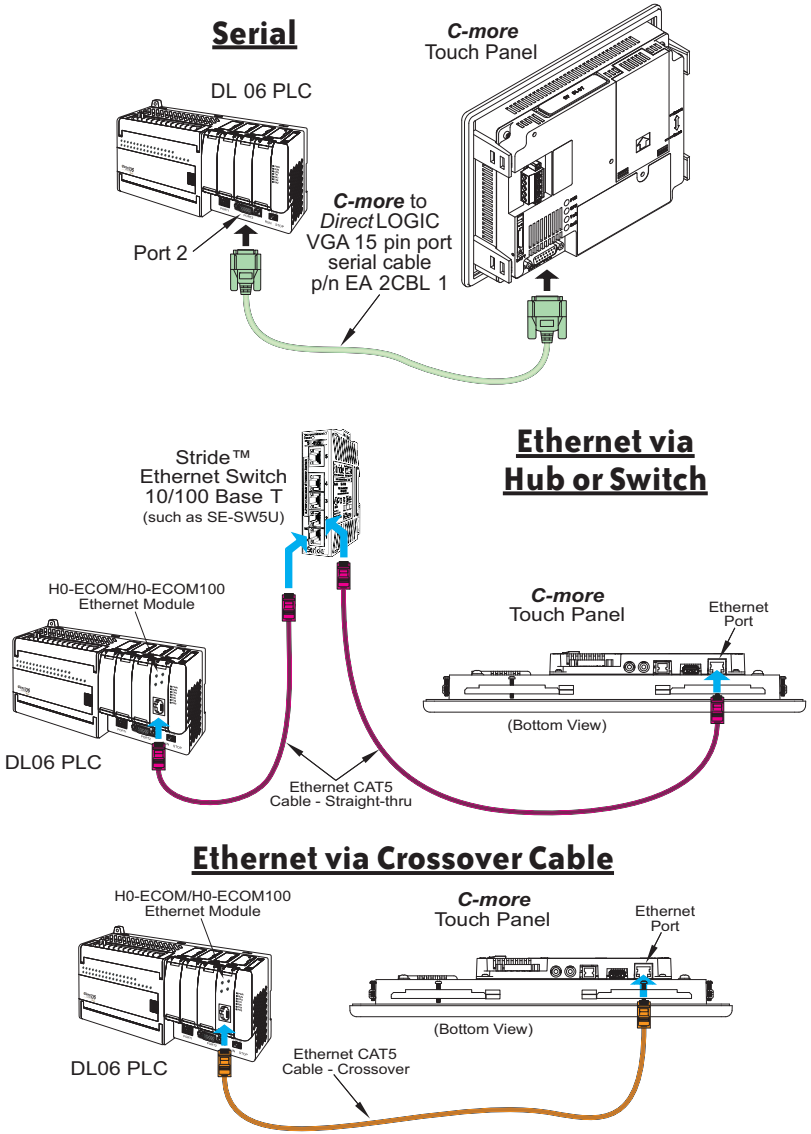

SPECIFICATIONS

CHAPTER 2

In This Chapter...

Available Models 2–2

Model Specifications 2–3

6″ Base Feature Models 2–4

6″ Full Feature Models 2–5

6″ Obsolete Models 2–6

8″ and 10″ Full Feature Models 2–8

12″ and 15″ Full Feature Models 2–9

EA7-S6M-R, S6C-R, T6CL-R, S6M, S6C, T6C, T6CL (Dimensions and Ports & Memory Exp.) 2–10

EA7-T8C (Dimensions and Ports & Memory Exp.) 2–12

EA7-T10C (Dimensions and Ports & Memory Exp.) 2–14

EA7-T12C (Dimensions and Ports & Memory Exp.) 2–16

EA7-T15C (Dimensions and Ports & Memory Exp.) 2–18

Mounting Clearances 2–20

Communications Ports 2–21

Audio WAV File Specifications 2–23

Memory Organization 2–24

Handling External Memory Devices 2–25

Power Loss Detection and Power Retention Period 2–26

Data Logging Function and Logging Media 2–26

Data Logging - Memory Device Full 2–26

Chemical Compatibility 2–27

Available Models

The *C-more*® Operator Interface is the next generation of touch panel brought to you by *AutomationDirect*. It has been designed to display and interchange graphical data from a PLC by merely viewing or touching the screen.

The *C-more* Touch Panel is available in a variety of models to suit your application. Refer to the following tables for a list of part numbers, descriptions and options available.

Part Number	Description	User Memory	CF Card Option	USB Device	Ethernet
EA7-S6M-R	6-inch ***C-more*** grayscale STN touch panel (5.7 inch viewable screen), 15 shades of gray, 320 x 240 pixel QVGA screen resolution, 333 MHz CPU, 24 VDC (20.4-28.8 VDC operating range), NEMA 4/4X, IP65 (when mounted correctly; for indoor use only), non-replaceable backlight, 50,000 hour half-life. *Base Model: Built-in USB only, no Ethernet or CompactFlash support.	10 MB	No	Yes	No
EA7-T6CL-R	6-inch ***C-more*** color TFT touch panel (5.7 inch viewable screen), 64K colors, 320 x 240 pixel QVGA screen resolution, 333 MHz CPU, 24 VDC (20.4-28.8 VDC operating range), NEMA 4/4X, IP65 (when mounted correctly; for indoor use only), non-replaceable LED backlight, 50,000 hour half-life. *Base Model: Built-in USB only, no Ethernet or CompactFlash support.	10 MB	No	Yes	No
EA7-S6M	6-inch ***C-more*** grayscale STN touch panel (5.7 inch viewable screen), 15 shades of gray, 320 x 240 pixel QVGA screen resolution, 333 MHz CPU, 24 VDC (20.4-28.8 VDC operating range), NEMA 4/4X, IP65 (when mounted correctly; for indoor use only), non-replaceable backlight, 50,000 hour half-life. Built-in Ethernet and USB; supports CompactFlash.	10MB	Yes	Yes	Yes
EA7-T6CL	6-inch ***C-more*** color TFT touch panel (5.7 inch viewable screen), 64K colors, 320 x 240 pixel QVGA screen resolution, 333 MHz CPU, 24 VDC (20.4-28.8 VDC operating range), NEMA 4/4X, IP65 (when mounted correctly; for indoor use only), non-replaceable LED backlight, 50,000 hour half-life. Built-in Ethernet and USB; supports Compact Flash.	10 MB	Yes	Yes	Yes

Table continued on the next page.

Available Models (cont'd)

Part Number	Description	User Memory	CF Card Option	USB Device	Ethernet
EA7-T8C	8-inch ***C-more*** color TFT touch panel (8.4 inch viewable screen), 64K colors, 640 x 480 pixel VGA screen resolution, 400 MHz CPU, 24 VDC (20.4-28.8 VDC operating range), NEMA 4/4X, IP65 (when mounted correctly; for indoor use only), user replaceable backlight, 50,000 hour half-life. Built-in Ethernet and USB; supports CompactFlash.	10 MB	Yes	Yes	Yes
EA7-T10C	10-inch ***C-more*** color TFT touch panel (10.4 inch viewable screen), 64K colors, 640 x 480 pixel VGA screen resolution, 400 MHz CPU, 24 VDC (20.4-28.8 VDC operating range), NEMA 4/4X, IP65 (when mounted correctly; for indoor use only), user replaceable backlight, 50,000 hour half-life. Built-in Ethernet and USB; supports CompactFlash.	10 MB	Yes	Yes	Yes
EA7-T12C	12-inch ***C-more*** color TFT touch panel (12.1 inch viewable screen), 64K colors, 800 x 600 pixel SVGA screen resolution, 400 MHz CPU, 24 VDC (20.4-28.8 VDC operating range), NEMA 4/4X, IP65 (when mounted correctly; for indoor use only), user replaceable backlight, 50,000 hour half-life. Built-in Ethernet and USB; supports CompactFlash.	40 MB	Yes	Yes	Yes
EA7-T15C	15-inch ***C-more*** color TFT touch panel (15.0 inch viewable screen), 64K colors, 1024 x 768 XGA screen resolution, 400 MHz CPU, 24V DC (20.4-28.8 VDC operating range), NEMA 4/4X, IP65 (when mounted correctly; for indoor use only), user replaceable backlight, 50,000 hour half- life. Built-in Ethernet and USB; supports CompactFlash.	40 MB	Yes	Yes	Yes

Model Specifications

The following tables on the next four pages provide details to the Specifications of all C-more models. The specification tables are separated into the following groups:

- 6" Base Feature Models, EA7-S6M-R and EA7-T6CL-R; obsolete model EA7-S6C-R
- 6" Full Feature Models, EA7-S6M, and EA7-T6CL; obsolete models EA7-S6C and EA7-T6C
- 8" & 10" Full Feature Models, EA7-T8C and EA7-T10C
- 12" & 15" Full Feature Models, EA7-T12C & EA7-T15C

The following note applies to the Backlight Average Lifetime of 50,000 hours shown in the following tables:

***Note**: The backlight average lifetime is defined as the average usage time it takes before the brightness becomes 50% of the initial brightness. The lifetime of the backlight depends on the ambient temperature. The lifetime will decrease under low or high temperature usage.*

The following note applies to the Touch Panel Type specification shown in the following tables:

***Note**: The Touchscreen is designed to respond to a single touch. If it is touched at multiple points at the same time, an unexpected object may be activated.*

6” Base Feature Models

Specification \ Model	6” STN grayscale w/ base features	6” TFT color w/ base features
Part Number	**EA7-S6M-R**	**EA7-T6CL-R**
Display Actual Size and Type	5.7" STN grayscale	5.7" TFT color
Color Scale	15 shades of gray	65,536 colors
Display Viewing Area	4.54" x 3.4" [115.2 mm x 86.4 mm]	
Screen Pixels	320 x 240 (QVGA)	
Display Brightness	150 cd/m² (NITS)	270 cd/m² (NITS)
LCD Panel Dot Pitch	0.36 mm x 0.36 mm	
Backlight Average Lifetime	Approximately 50,000 hours (See note at bottom of page 2-3.)	
Backlight User Replaceable	No	
Touch Panel Type	Analog resistive (10-bit resolution, 1024 x 1024 touch area) (See note at bottom of page 2-3.)	
CPU Type	32-Bit RISC CPU (333 MHz)	
Battery	Replaceable battery – ADC Part # D2-BAT-1 (Manufacturer Part # CR2354)	
System Memory	SDRAM 32 MBytes	
System Flash Memory	FLASH 32 MBytes	
Backup Memory (SRAM)	Control data backup memory (SRAM) 256 KBytes	
Logging Data Memory	USB Pen Drive p/n SDCZ4-2048-A10 (Optional)	
Number of Screens	Up to 9999 with ver. 2.40 and later – limited by project memory (10 MBytes)	
Realtime Clock	Built into panel (PLC clock is still accessible if available)	
Calendar – Month/Day/Year	Yes - battery backup	
Screen Saver	Yes, backlight turns off after a 30–1500 minute adjustable time, or can be disabled	
Serial PLC Interface	Serial PLC Port: RS-232C/422/485 15-Pin D-sub (female)	
USB Port – Type B	Download/Program – USB Port – type B	
USB Port – Type A	Port for USB device options – type A	
Ethernet Port	not available	
Audio Line Out	not available	
CF Card – Slot #1	not available	
Expansion Assembly (p/n EA-EXP-OPT)	not available	
Supply Power	24 VDC, -15%, +20% (20.4–28.8 VDC operating range, minimum of 1.5 A) (Use the AC/DC Power Adapter, EA-AC, to power the touch panel from a 100-240 VAC, 50/60 Hz. power source.)	
Power Consumption	9 W @ 24 VDC	
Recommended DC Supply Fuse	2.5 A time delay, ADC p/n MDL2-5	
Operating Temperature	0 to 50 °C (32 to 122 °F); Maximum surrounding air temperature rating: 50 °C (122 °F)	
Storage Temperature	–20 to +60 °C (–4 to +140 °F)	
Humidity	10–85% RH (non-condensing)	
Noise Immunity	Noise voltage: 1000 Vp-p, Pulse width: 1 µs, Rise time: 1 ns	
Withstand Voltage	1000 VDC for 1 minute, between DC power supply input terminal and safety ground	
Insulation Resistance	Over 20 MΩ between DC power supply input terminal and safety ground	
Vibration	IEC61131-2 compliant, 10–57 Hz: 0.075 mm amplitude, 57–150 Hz 1.0 G: 10 sweep cycles per axis on each of 3 mutually perpendicular axes	
Shock	15 G peak, 11 ms duration, 2 shocks per axis, on 3 mutually perpendicular axes	
Environment	For use in Pollution Degree 2 environment	
Enclosure	Meets UL Type 4X, when mounted correctly. For indoor use only.	
Agency Approvals	UL, cUL, CE	
Dimensions	6.140" x 8.047" x 1.697" [156.0 mm x 204.4 mm x 43.1 mm]	
Weight	1.46 lb. [660 g]	1.43 lb. [650 g]

6” Full Feature Models

Specification / Model	6” STN grayscale w/ full features	6” TFT color w/ full features
Part Number	**EA7-S6M**	**EA7-T6CL**
Display Actual Size and Type	5.7" STN grayscale	5.7" TFT color
Color Scale	15 shades of gray	65,536 colors
Display Viewing Area	4.54" x 3.4" [115.2 mm x 86.4 mm]	
Screen Pixels	320 x 240 (QVGA)	
Display Brightness	150 cd/m² (NITS)	270 cd/m² (NITS)
LCD Panel Dot Pitch	0.36 mm x 0.36 mm	
Backlight Average Lifetime	Approximately 50,000 hours (See note at bottom of page 2-3.)	
Backlight User Replaceable	No	
Touch Panel Type	Analog resistive (10-bit resolution, 1024 x 1024 touch area) (See note at bottom of page 2-3.)	
CPU Type	32-Bit RISC CPU (333 MHz)	
Battery	Replaceable battery – ADC Part # D2-BAT-1 (Manufacturer Part # CR2354)	
System Memory	SDRAM 32 MBytes	
System Flash Memory	FLASH 32 MBytes	
Backup Memory (SRAM)	Control data backup memory (SRAM) 256 KBytes	
Logging Data Memory	CompactFlash Memory Card p/n EA-CF-CARD, industrial grade, high speed (Optional) or USB Pen Drive p/n SDCZ4-2048-A10 (Optional)	
Number of Screens	Up to 9999 with ver. 2.40 and later – limited by project memory (10 MBytes)	
Realtime Clock	Built into panel (PLC clock is still accessible if available)	
Calendar – Month/Day/Year	Yes - battery backup	
Screen Saver	Yes, backlight turns off after a 30–1500 minute adjustable time, or can be disabled	
Serial PLC Interface	Serial PLC Port: RS-232C/422/485 15-Pin D-sub (female)	
USB Port – Type B	Download/Program – USB Port – type B	
USB Port – Type A	Port for USB device options – type A	
Ethernet Port	Ethernet 10/100 Base-T	
Audio Line Out	Audio Line Out, 1 volt rms, stereo – requires amplifier and speaker(s)	
CF Card – Slot #1	Optional: CompactFlash Card p/n EA-CF-CARD, slot #1 located on top side of touch panel.	
Expansion Assembly (p/n EA-EXP-OPT)	Optional: Use the CF Card Adapter p/n EA-CF-IF in the right slot of the expansion assembly for installing CF card - Slot #2. The left slot of the expansion assembly is for future options.	
Supply Power	24 VDC, -15%, +20% (20.4–28.8 VDC operating range, minimum of 1.5 A) (Use the AC/DC Power Adapter, EA-AC, to power the touch panel from a 100-240 VAC, 50/60 Hz. power source.)	
Power Consumption	10 W @ 24 VDC	11 W @ 24 VDC
Recommended DC Supply Fuse	2.5 A time delay, ADC p/n MDL2-5	
Operating Temperature	0 to 50 °C (32 to 122 °F); Maximum surrounding air temperature rating: 50 °C (122 °F)	
Storage Temperature	–20 to +60 °C (–4 to +140 °F)	
Humidity	10–85% RH (non-condensing)	
Noise Immunity	Noise voltage: 1000 Vp-p, Pulse width: 1 µs, Rise time: 1 ns	
Withstand Voltage	1000 VDC for 1 minute, between DC power supply input terminal and safety ground	
Insulation Resistance	Over 20 MΩ between DC power supply input terminal and safety ground	
Vibration	IEC61131-2 compliant, 10–57 Hz: 0.075 mm amplitude, 57–150 Hz 1.0 G: 10 sweep cycles per axis on each of 3 mutually perpendicular axes	
Shock	15 G peak, 11 ms duration, 2 shocks per axis, on 3 mutually perpendicular axes	
Environment	For use in Pollution Degree 2 environment	
Enclosure	Meets UL Type 4X when mounted correctly. For indoor use only.	
Agency Approvals	UL, cUL, CE	
Dimensions	6.140" x 8.047" x 1.697" [156.0 mm x 204.4 mm x 43.1 mm]	
Weight	1.50 lb. [680 g]	1.48 lb. [670 g]

6” Obsolete Models

Specification / Model	6” STN color w/ base features
Part Number	**EA7-S6C-R**
Display Actual Size and Type	5.7" STN color
Color Scale	256 colors
Display Viewing Area	4.54" x 3.4" [115 2 mm x 86.4 mm]
Screen Pixels	320 x 240 (QVGA)
Display Brightness	200 cd/m² (NITS)
LCD Panel Dot Pitch	0.36 mm x 0.36 mm
Backlight Average Lifetime	Approximately 50,000 hours (See note at bottom of page 2-3.)
Backlight User Replaceable	No
Touch Panel Type	Analog resistive (10-bit resolution, 1024 x 1024 touch area) (See note at bottom of page 2-3.)
CPU Type	32-Bit RISC CPU (333 MHz)
Battery	Replaceable battery – ADC Part # D2-BAT-1 (Manufacturer Part # CR2354)
System Memory	SDRAM 32 MBytes
System Flash Memory	FLASH 32 MBytes
Backup Memory (SRAM)	Control data backup memory (SRAM) 256 KBytes
Logging Data Memory	USB Pen Drive p/n SDCZ4-2048-A10 (Optional)
Number of Screens	Up to 9999 with ver. 2.40 and later – limited by project memory (10Mbytes)
Realtime Clock	Built into panel (PLC clock is still accessible if available)
Calendar – Month/Day/Year	Yes - battery backup
Screen Saver	Yes, backlight turns off after a 30–1500 minute adjustable time, or can be disabled
Serial PLC Interface	Serial PLC Port: RS-232C/422/485 15-Pin D-sub (female)
USB Port – Type B	Download/Program – USB Port – type B
USB Port – Type A	Port for USB device options – type A
Ethernet Port	not available
Audio Line Out	not available
CF Card – Slot #1	not available
Expansion Assembly (p/n EA-EXP-OPT)	not available
Supply Power	24 VDC, -15%, +20% (20.4–28.8 VDC operating range, minimum of 1.5 A) (Use the AC/DC Power Adapter, EA-AC, to power the touch panel from a 100-240 VAC, 50/60 Hz. power source.)
Power Consumption	10 W @ 24 VDC
Recommended DC Supply Fuse	2.5 A time delay, ADC p/n MDL2-5
Operating Temperature	0 to 50 °C (32 to 122 °F); Maximum surrounding air temperature rating: 50 °C (122 °F)
Storage Temperature	–20 to +60 °C (–4 to +140 °F)
Humidity	10–85% RH (non-condensing)
Noise Immunity	Noise voltage: 1000 Vp-p, Pulse width: 1 µs, Rise time: 1 ns
Withstand Voltage	1000 VDC for 1 minute, between DC power supply input terminal and safety ground
Insulation Resistance	Over 20 MΩ between DC power supply input terminal and safety ground
Vibration	IEC61131-2 compliant, 10–57 Hz: 0.075 mm amplitude, 57–150 Hz 1.0 G: 10 sweep cycles per axis on each of 3 mutually perpendicular axes
Shock	15 G peak, 11 ms duration, 2 shocks per axis, on 3 mutually perpendicular axes
Environment	For use in Pollution Degree 2 environment
Enclosure	Meets UL Type 4X, when mounted correctly. For indoor use only.
Agency Approvals	UL, cUL, CE
Dimensions	6.140" x 8.047" x 1.697" [156.0 mm x 204.4 mm x 43.1 mm]
Weight	1.39 lb. [630 g]

6” Obsolete Models (cont’d)

Specification / Model	6” STN color w/ full features	6” TFT color w/ full features
Part Number	**EA7-S6C**	**EA7-T6C**
Display Actual Size and Type	5.7" STN color	5.7" TFT color
Color Scale	256 colors	65,536 colors
Display Viewing Area	4.54" x 3.4" [115 2 mm x 86.4 mm]	
Screen Pixels	320 x 240 (QVGA)	
Display Brightness	200 cd/m² (NITS)	270 cd/m² (NITS)
LCD Panel Dot Pitch	0.36 mm x 0.36 mm	
Backlight Average Lifetime	Approximately 50,000 hours (See note at bottom of page 2-3.)	
Backlight User Replaceable	No	
Touch Panel Type	Analog resistive (10-bit resolution, 1024 x 1024 touch area) (See note at bottom of page 2-3.)	
CPU Type	32-Bit RISC CPU (333 MHz)	
Battery	Replaceable battery – ADC Part # D2-BAT-1 (Manufacturer Part # CR2354)	
System Memory	SDRAM 32 MBytes	
System Flash Memory	FLASH 32 MBytes	
Backup Memory (SRAM)	Control data backup memory (SRAM) 256 KBytes	
Logging Data Memory	CompactFlash Memory Card p/n EA-CF-CARD, industrial grade, high speed (Optional) or USB Pen Drive p/n SDCZ4-2048-A10 (Optional)	
Number of Screens	Up to 9999 with ver. 2.40 and later – limited by project memory (10Mbytes)	
Realtime Clock	Built into panel (PLC clock is still accessible if available)	
Calendar – Month/Day/Year	Yes - battery backup	
Screen Saver	Yes, backlight turns off after a 30–1500 minute adjustable time, or can be disabled	
Serial PLC Interface	Serial PLC Port: RS-232C/422/485 15-Pin D-sub (female)	
USB Port – Type B	Download/Program – USB Port – type B	
USB Port – Type A	Port for USB device options – type A	
Ethernet Port	Ethernet 10/100 Base-T	
Audio Line Out	Audio Line Out, 1 volt rms, stereo – requires amplifier and speaker(s)	
CF Card – Slot #1	Optional: CompactFlash Card p/n EA-CF-CARD, slot #1 located on top side of touch panel.	
Expansion Assembly (p/n EA-EXP-OPT)	Adapter p/n EA-CF-IF in the right slot of the expansion assembly for installing CF card - Slot #2. The left slot of the expansion assembly is for future options.	
Supply Power	24 VDC, -15%, +20% (20.4–28.8 VDC operating range, minimum of 1.5 A) (Use the AC/DC Power Adapter, EA-AC, to power the touch panel from a 100-240 VAC, 50/60 Hz. power source.)	
Power Consumption	11 W @ 24 VDC	13 W @ 24 VDC
Recommended DC Supply Fuse	2.5 A time delay, ADC p/n MDL2-5	
Operating Temperature	0 to 50 °C (32 to 122 °F); Maximum surrounding air temperature rating: 50 °C (122 °F)	
Storage Temperature	–20 to +60 °C (–4 to +140 °F)	
Humidity	10–85% RH (non-condensing)	
Noise Immunity	Noise voltage: 1000 Vp-p, Pulse width: 1 µs, Rise time: 1 ns	
Withstand Voltage	1000 VDC for 1 minute, between DC power supply input terminal and safety ground	
Insulation Resistance	Over 20 MΩ between DC power supply input terminal and safety ground	
Vibration	IEC61131-2 compliant, 10–57 Hz: 0.075 mm amplitude, 57–150 Hz 1.0 G: 10 sweep cycles per axis on each of 3 mutually perpendicular axes	
Shock	15 G peak, 11 ms duration, 2 shocks per axis, on 3 mutually perpendicular axes	
Environment	For use in Pollution Degree 2 environment	
Enclosure	Meets UL Type 4X when mounted correctly. For indoor use only.	
Agency Approvals	UL, cUL, CE	
Dimensions	6.140" x 8.047" x 1.697" [156.0 mm x 204.4 mm x 43.1 mm]	
Weight	1.43 lb. [650 g]	1.52 lb. [690 g]

8” and 10” Full Feature Models

Specifications / Model	8” TFT color w/ full features	10” TFT color w/ full features
Part Number	**EA7-T8C**	**EA7-T10C**
Display Actual Size and Type	8.4" TFT color	10.4" TFT color
Color Scale	65,536 colors	
Display Viewing Area	6.73" x 5.05" [170 9 mm x 128.2 mm]	8.31" x 6.24" [211.2 mm x 158.4 mm]
Screen Pixels	640 x 480 (VGA)	
Display Brightness	300 cd/m² (NITS)	270 cd/m² (NITS)
LCD Panel Dot Pitch	0.267 mm x 0.267 mm	0.33 mm x 0.33 mm
Backlight Average Lifetime	Approximately 50,000 hours (See note at bottom of page 2-3.)	
Backlight User Replaceable	Yes - Part No. EA-xx-BULB, xx = panel size	
Touch Panel Type	Analog resistive (10-bit resolution, 1024 x 1024 touch area) (See note at bottom of page 2-3.)	
CPU Type	32-Bit RISC CPU (400 MHz)	
Battery	Replaceable battery – ADC Part # D2-BAT-1 (Manufacturer Part # CR2354)	
System Memory	SDRAM 32 MBytes	
System Flash Memory	FLASH 32 MBytes	
Backup Memory (SRAM)	Control data backup memory (SRAM) 256 KBytes	
Logging Data Memory	CompactFlash Memory Card p/n EA-CF-CARD, industrial grade, high speed (Optional) or USB Pen Drive p/n SDCZ4-2048-A10 (Optional)	
Number of Screens	Up to 9999 with ver. 2.40 and later – limited by project memory (10 MBytes)	
Realtime Clock	Built into panel (PLC clock is still accessible if available)	
Calendar – Month/Day/Year	Yes - battery backup	
Screen Saver	Yes, backlight turns off after a 30–1500 minute adjustable time, or can be disabled	
Serial PLC Interface	Serial PLC Port: RS-232C/422/485 15-Pin D-sub (female)	
USB Port – Type B	Download/Program – USB Port – type B	
USB Port – Type A	Port for USB device options – type A	
Ethernet Port	Ethernet 10/100 Base-T	
Audio Line Out	Audio Line Out, 1 volt rms, stereo – requires amplifier and speaker(s)	
CF Card – Slot #1	Optional: CompactFlash Card p/n EA-CF-CARD, slot #1 located on top side of touch panel.	
Expansion Assembly (p/n EA-EXP-OPT)	Optional: Use the CF Card Adapter p/n EA-CF-IF in the right slot of the expansion assembly for installing CF card - Slot #2. The left slot of the expansion assembly is for future options.	
Supply Power	24 VDC, -15%, +20% (20.4–28.8 VDC operating range, minimum of 1.5 A) (Use the AC/DC Power Adapter, EA-AC, to power the touch panel from a 100-240 VAC, 50/60 Hz. power source.)	
Power Consumption	15 W @ 24 VDC	17 W @ 24 VDC
Recommended DC Supply Fuse	2.5 A time delay, ADC p/n MDL2-5	
Operating Temperature	0 to 50 °C (32 to 122 °F); Maximum surrounding air temperature rating: 50 °C (122 °F)	
Storage Temperature	–20 to +60 °C (–4 to +140 °F)	
Humidity	10–85% RH (non-condensing)	
Noise Immunity	Noise voltage: 1000 Vp-p, Pulse width: 1 µs, Rise time: 1 ns	
Withstand Voltage	1000 VDC for 1 minute, between DC power supply input terminal and safety ground	
Insulation Resistance	Over 20 MΩ between DC power supply input terminal and safety ground	
Vibration	IEC61131-2 compliant, 10–57 Hz: 0.075 mm amplitude, 57–150 Hz 1.0 G: 10 sweep cycles per axis on each of 3 mutually perpendicular axes	
Shock	15 G peak, 11 ms duration, 2 shocks per axis, on 3 mutually perpendicular axes	
Environment	For use in Pollution Degree 2 environment	
Enclosure	Meets UL Type 4X when mounted correctly. For indoor use only.	
Agency Approvals	UL, cUL, CE	
Dimensions	8.748" x 10.894" x 2.053" [222.2 mm x 276.7 mm x 52.1 mm]	10.669" x 13.661" x 2.079" [271.0 x 347.0 x 52.8 mm]
Weight	2.60 lb. [1,180 g]	3.55 lb. [1,610 g]

12” and 15” Full Feature Models

Specifications / Model	12” TFT color w/ full features	15” TFT color w/ full features
Part Number	**EA7-T12C**	**EA7-T15C**
Display Actual Size and Type	12.1" TFT color	15.0" TFT color
Color Scale	65,536 Colors	
Display Viewing Area	9.47" x 7.62" [240.6 mm x 184.5 mm]	11.97" x 8.98" [304.1 mm x 228.1 mm]
Screen Pixels	800 x 600 (SVGA)	1024 x 768 (XGA)
Display Brightness	260 cd/m² (NITS)	220 cd/m² (NITS)
LCD Panel Dot Pitch	0.267 mm x 0.267 mm	0.297 mm x 0.297 mm
Backlight Average Lifetime	Approximately 50,000 hours (See note at bottom of page 2-3.)	
Backlight User Replaceable	Yes - Part No. EA-xx-BULB, xx = panel size	
Touch Panel Type	Analog resistive (12-bit resolution, 4096 x 4096 touch area) (See note at bottom of page 2-3.)	
CPU Type	32-Bit RISC CPU (400 MHz) Plus Graphic Accelerator Chip	
Battery	Replaceable battery – ADC Part # D2-BAT-1 (Manufacturer Part # CR2354)	
System Memory	SDRAM 64 MBytes	
System Flash Memory	FLASH 64 MBytes	
Backup Memory (SRAM)	Control data backup memory (SRAM) 256 KBytes	
Logging Data Memory	CompactFlash Memory Card p/n EA-CF-CARD, industrial grade, high speed (Optional) or USB Pen Drive p/n SDCZ4-2048-A10 (Optional)	
Number of Screens	Up to 9999 with ver. 2.40 and later – limited by project memory (10 MBytes))	
Realtime Clock	Built into panel (PLC clock is still accessible if available)	
Calendar – Month/Day/Year	Yes - battery backup	
Screen Saver	Yes, backlight turns off after a 30–1500 minute adjustable time, or can be disabled	
Serial PLC Interface	Serial PLC Port: RS-232C/422/485 15-Pin D-sub (female)	
USB Port – Type B	Download/Program – USB Port – type B	
USB Port – Type A	Port for USB device options – type A	
Ethernet Port	Ethernet 10/100 Base-T	
Audio Line Out	Audio Line Out, 1 volt rms, stereo – requires amplifier and speaker(s)	
CF Card – Slot #1	Optional: CompactFlash Card p/n EA-CF-CARD, slot #1 located on top side of touch panel.	
Expansion Assembly (p/n EA-EXP-OPT)	Optional: Use the CF Card Adapter p/n EA-CF-IF in the right slot of the expansion assembly for installing CF card - Slot #2. The left slot of the expansion assembly is for future options.	
Supply Power	24 VDC, -15%, +20% (20.4–28.8 VDC operating range, minimum of 1.5 A) (Use the AC/DC Power Adapter, EA-AC, to power the touch panel from a 100-240 VAC, 50/60 Hz. power source.)	
Power Consumption	20 W @ 24 VDC	33 W @ 24 VDC
Recommended DC Supply Fuse	4.0 A time delay, ADC MDL4	
Operating Temperature	0 to 50 °C (32 to 122 °F); Maximum surrounding air temperature rating: 50 °C (122 °F)	
Storage Temperature	–20 to +60 °C (–4 to +140 °F)	
Humidity	10–85% RH (non-condensing)	
Noise Immunity	Noise voltage: 1000 Vp-p, Pulse width: 1 µs, Rise time: 1 ns	
Withstand Voltage	1000 VDC for 1 minute, between DC power supply input terminal and safety ground	
Insulation Resistance	Over 20 MΩ between DC power supply input terminal and safety ground	
Vibration	IEC61131-2 compliant, 10–57 Hz: 0.075 mm amplitude, 57–150 Hz 1.0 G: 10 sweep cycles per axis on each of 3 mutually perpendicular axes	
Shock	15 G peak, 11 ms duration, 2 shocks per axis, on 3 mutually perpendicular axes	
Environment	For use in Pollution Degree 2 environment	
Enclosure	Meets UL Type 4X when mounted correctly. For indoor use only.	
Agency Approvals	UL, cUL, CE	
Dimensions	11.024" x 13.336" x 2.075" [280.0 x 339.5 x 52.7 mm]	13.000" x 16.748" x 1.0481" [330.2 x 425.4 x 54.0 mm]
Weight	4.59 lb. [2,080 g]	7.01 lb. [3,180 g]

EA7-S6M-R, S6C-R, T6CL-R, S6M, S6C, T6C, T6CL

Dimensions:

All the necessary mounting hardware is provided with the touch panel. Use the two (2) mounting clips and screws to secure the touch panel to the cabinet or enclosure surface. A template is provided for marking the cutout dimensions on the mounting surface.

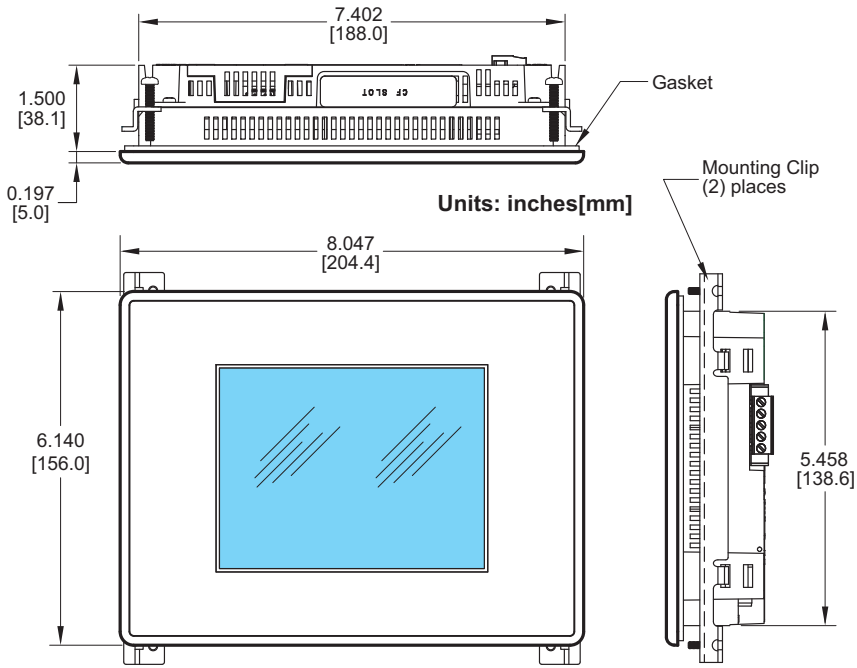

Enclosure Mounting Thickness Ranges and Mounting Clip Screw Torque

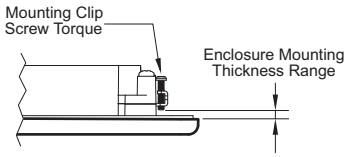

Touch Panel Size	Enclosure Thickness Range	Mounting Clip Screw Torque
6" – lower mounting clip position	0.039 - 0.24 inch [1 – 6 mm]	35 ~ 50 oz-in [0.25 ~ 0.35 Nm]
6" – upper mounting clip position	0.20 - 0.63 inch [5 – 16 mm]	35 ~ 50 oz-in [0.25 ~ 0.35 Nm]

EA7-S6M-R, S6C-R, T6CL-R, S6M, S6C, T6C, T6CL

Ports & Memory Expansion:

Base Feature Model
EA7-S6M-R and EA7-T6CL-R

Also obsolete model
EA7-S6C-R

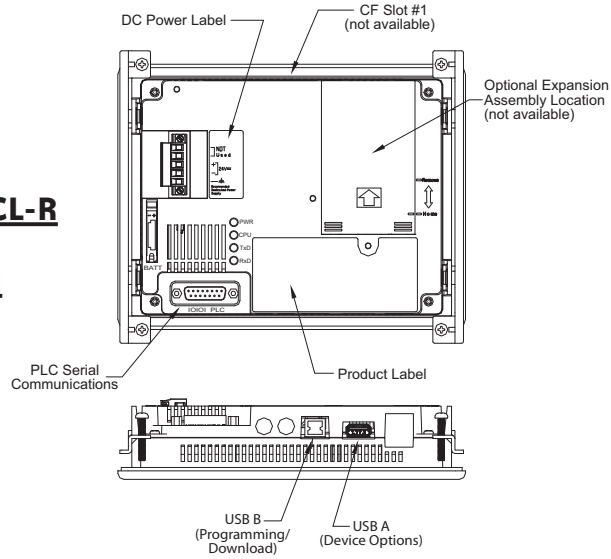

Full Feature Model
EA7-S6M and EA7-T6CL

Also obsolete models
EA7-S6C and EA7-T6C

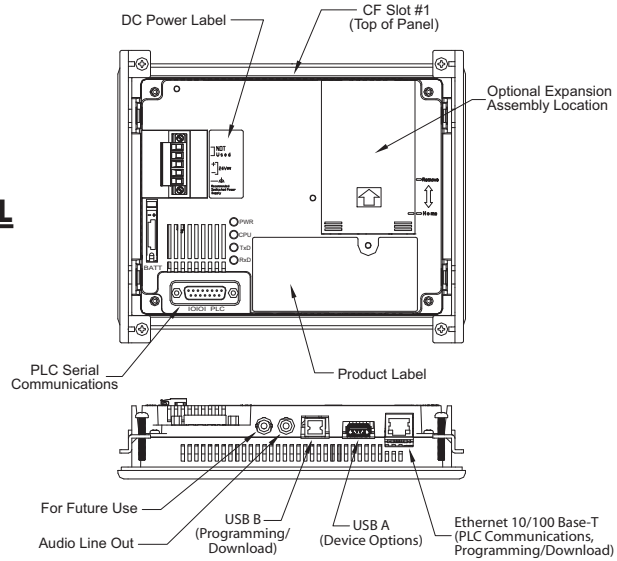

EA7-T8C

Dimensions:

All the necessary mounting hardware is provided with the touch panel. Use the six (6) mounting clips and screws to secure the touch panel to the cabinet or enclosure surface. A template is provided for marking the cutout dimensions on the mounting surface.

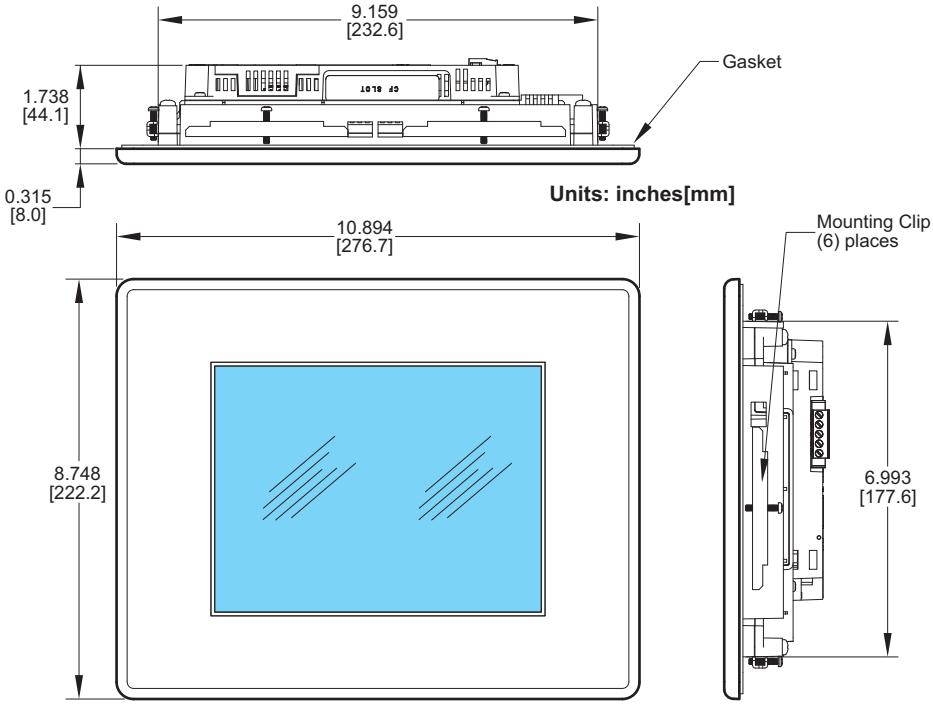

Enclosure Mounting Thickness Ranges and Mounting Clip Screw Torque

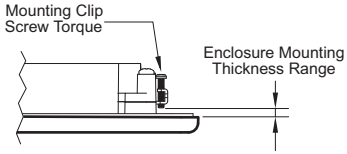

Touch Panel Size	Enclosure Thickness Range	Mounting Clip Screw Torque
8”, 10”, 12” & 15”	0.039 - 0.20 inch [1 – 5 mm]	42 ~ 57 oz-in [0.3 ~ 0.4 Nm]

EA7-T8C

Ports & Memory Expansion:

Full Feature Model
EA7-T8C

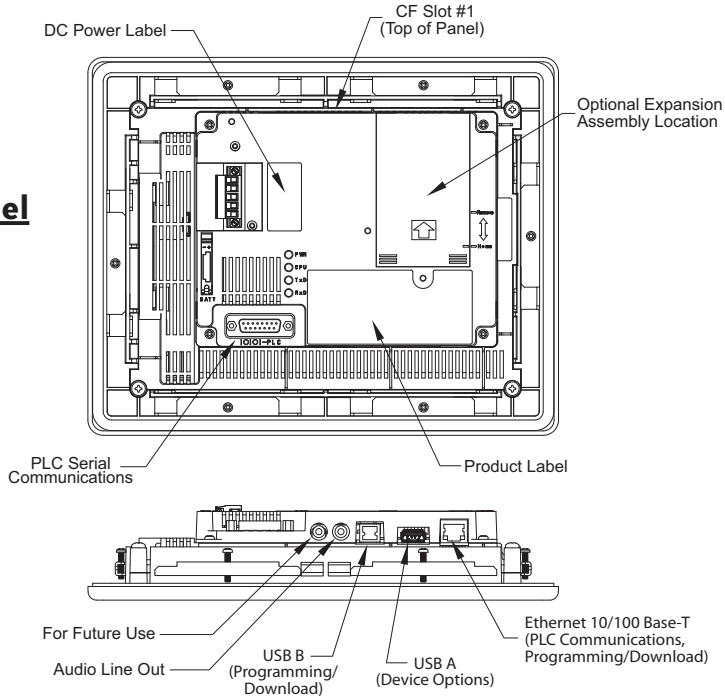

EA7-T10C

Dimensions:

All the necessary mounting hardware is provided with the touch panel. Use the six (6) mounting clips and screws to secure the touch panel to the cabinet or enclosure surface. A template is provided for marking the cutout dimensions on the mounting surface.

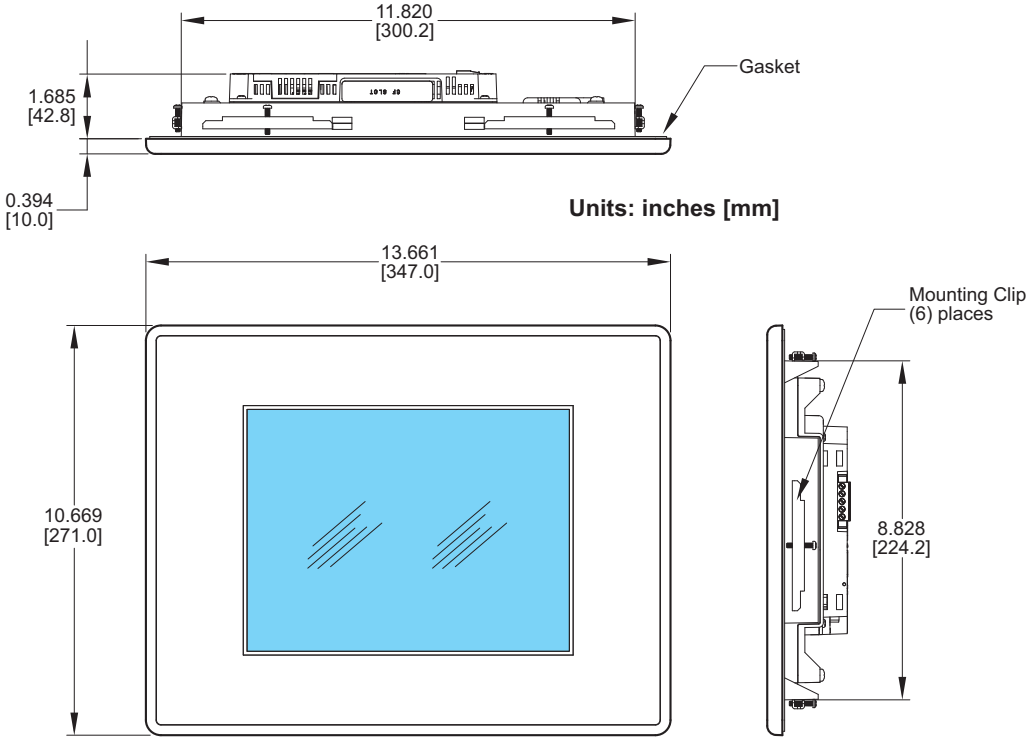

Enclosure Mounting Thickness Ranges and Mounting Clip Screw Torque

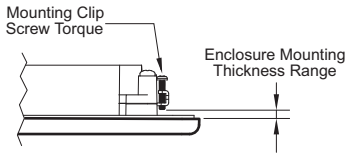

Touch Panel Size	Enclosure Thickness Range	Mounting Clip Screw Torque
8”, 10”, 12” & 15”	0.039 - 0.20 inch [1 – 5 mm]	42 ~ 57 oz-in [0.3 ~ 0.4 Nm]

EA7-T10C

Ports & Memory Expansion:

Full Feature Model
EA7-T10C

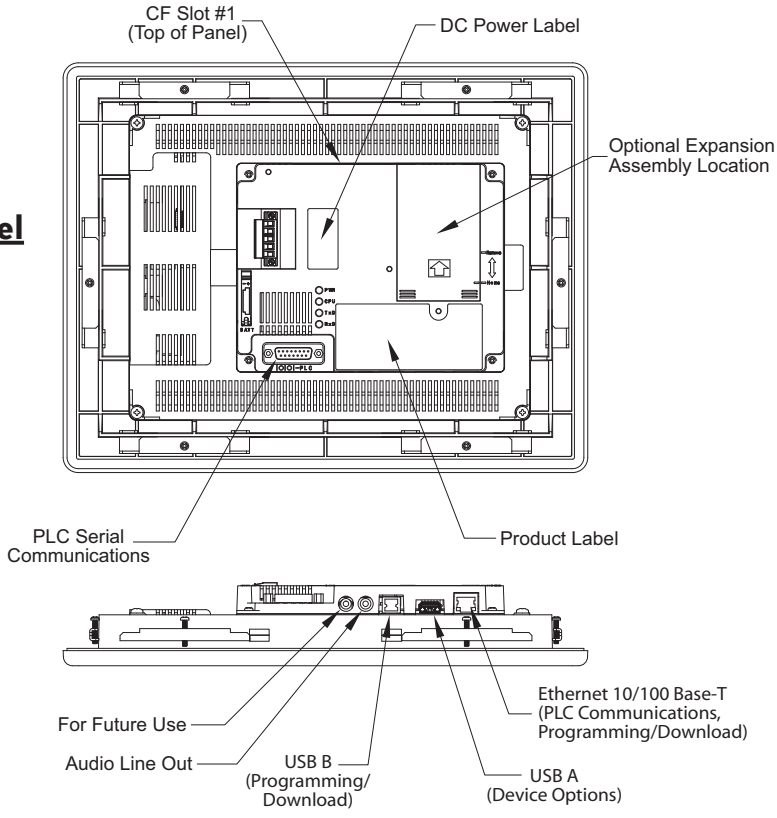

EA7-T12C

Dimensions:

All the necessary mounting hardware is provided with the touch panel. Use the six (6) mounting clips and screws to secure the touch panel to the cabinet or enclosure surface. A template is provided for marking the cutout dimensions on the mounting surface.

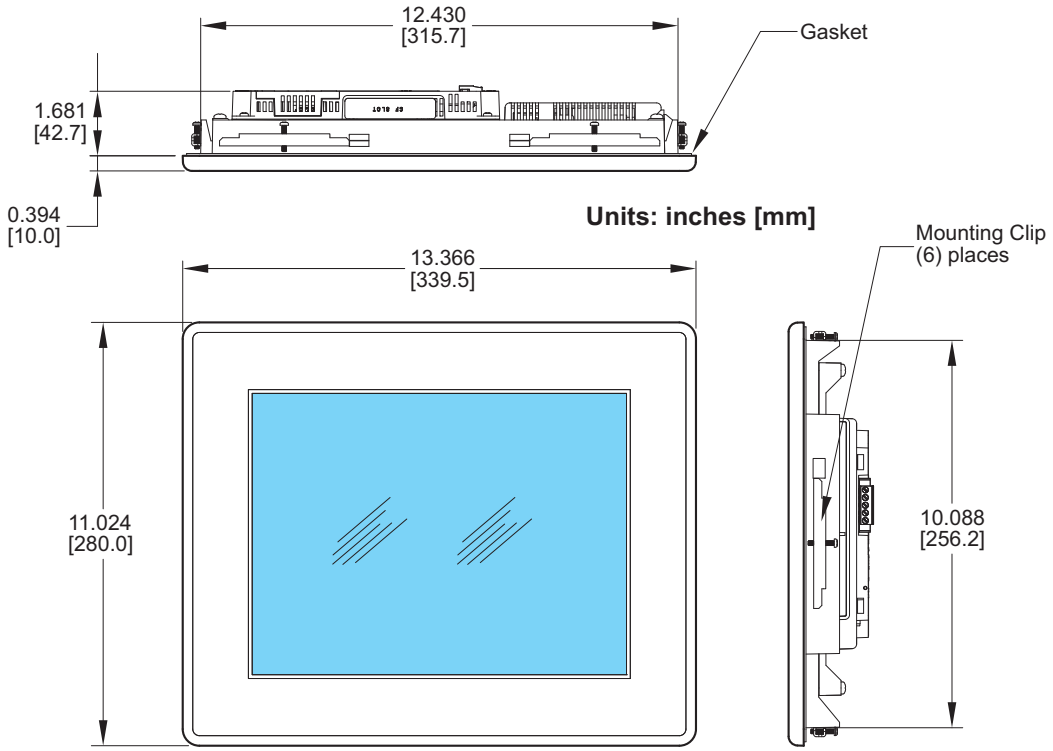

Enclosure Mounting Thickness Ranges and Mounting Clip Screw Torque

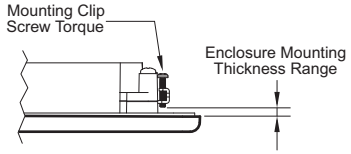

Touch Panel Size	Enclosure Thickness Range	Mounting Clip Screw Torque
8”, 10”, 12” & 15”	0.039 - 0.20 inch [1 – 5 mm]	42 ~ 57 oz-in [0.3 ~ 0.4 Nm]

EA7-T12C

Ports & Memory Expansion:

Full Feature Model
EA7-T12C

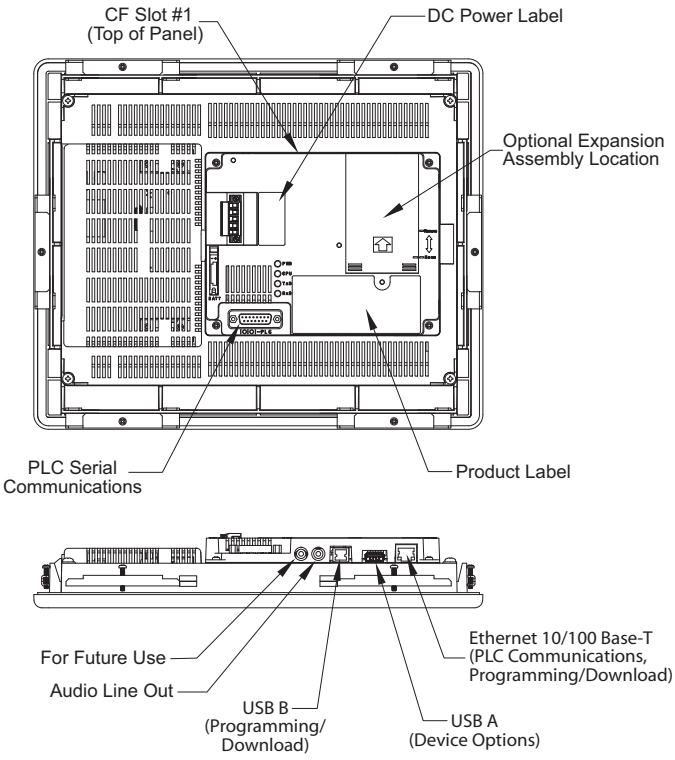

EA7-T15C

Dimensions:

All the necessary mounting hardware is provided with the touch panel. Use the eight (8) mounting clips and screws to secure the touch panel to the cabinet or enclosure surface. A template is provided for marking the cutout dimensions on the mounting surface.

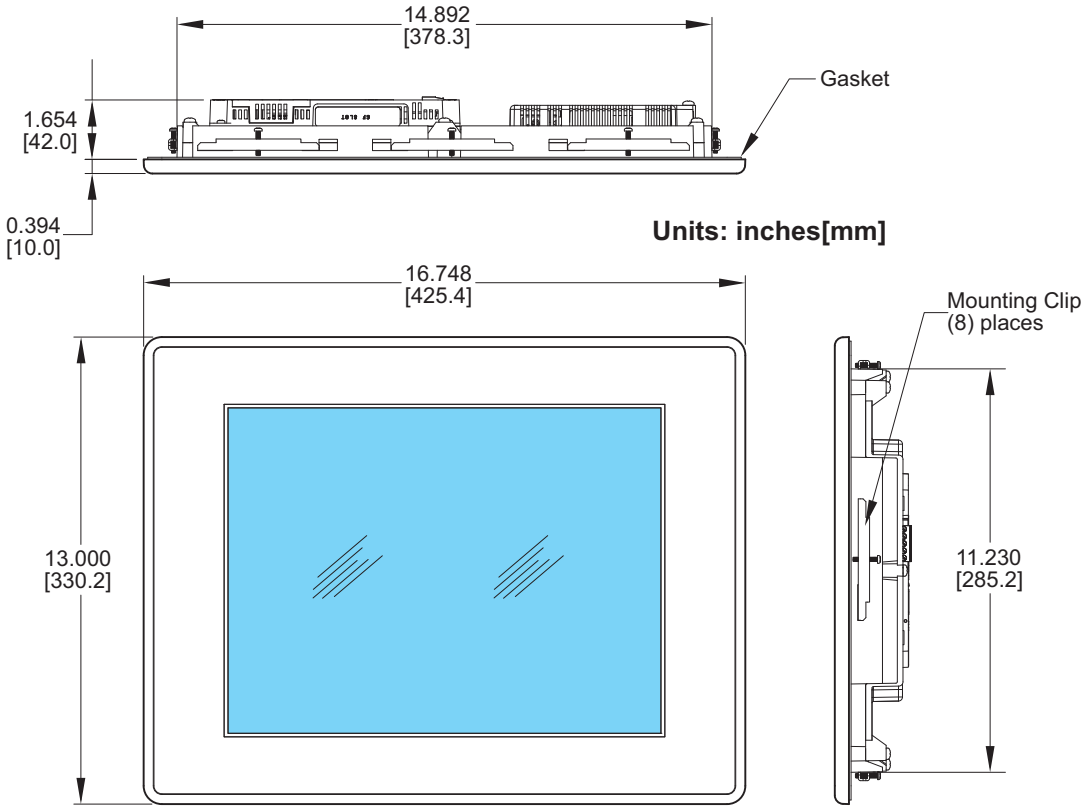

Enclosure Mounting Thickness Ranges and Mounting Clip Screw Torque

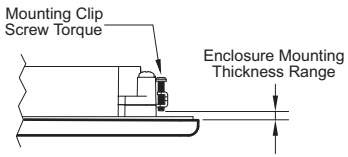

Touch Panel Size	Enclosure Thickness Range	Mounting Clip Screw Torque
8”, 10”, 12” & 15”	0.039 - 0.20 inch [1 – 5 mm]	42 ~ 57 oz-in [0.3 ~ 0.4 Nm]

EA7-T15C

Ports & Memory Expansion:

Full Feature Model
EA7-T15C

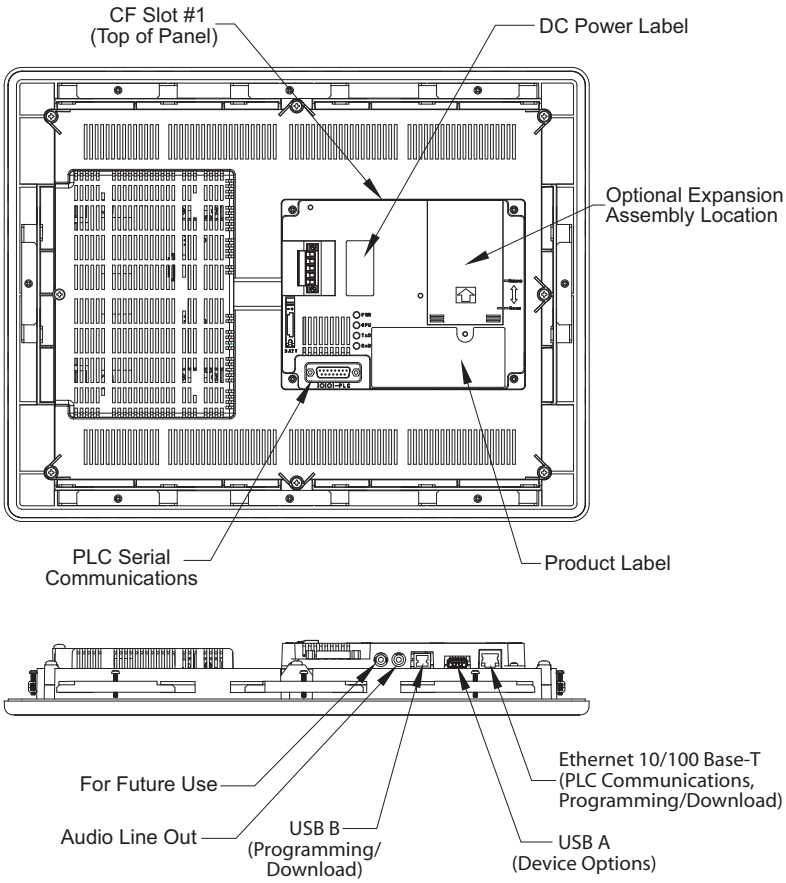

Mounting Clearances

The following drawing shows the mounting clearances for the ***C-more*** touch panel. There should be a minimum of 4 inches of space between all sides of the panel and the nearest object or obstruction and at least 2 inches between the rear of the panel and the nearest object or obstruction.

Note: *Make sure the touch panel is mounted on a vertical surface to allow convection air flow for proper cooling.*

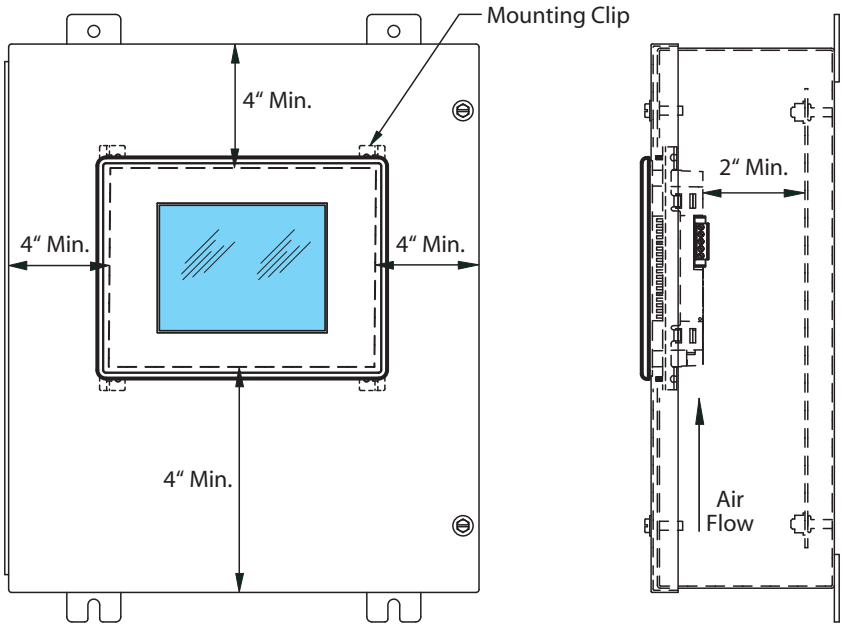

Front View

Side View

Communications Ports

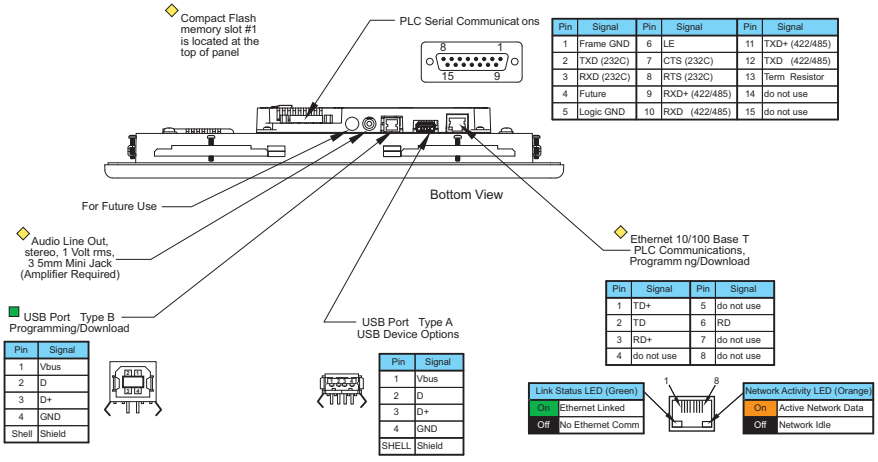

Pin	Signal	Pin	Signal	Pin	Signal
1	Frame GND	6	LE	11	TXD+ (422/485)
2	TXD (232C)	7	CTS (232C)	12	TXD (422/485)
3	RXD (232C)	8	RTS (232C)	13	Term Resistor
4	Future	9	RXD+ (422/485)	14	do not use
5	Logic GND	10	RXD (422/485)	15	do not use

Pin	Signal	Pin	Signal
1	TD+	5	do not use
2	TD	6	RD
3	RD+	7	do not use
4	do not use	8	do not use

Pin	Signal
1	Vbus
2	D
3	D+
4	GND
Shell	Shield

Pin	Signal
1	Vbus
2	D
3	D+
4	GND
SHELL	Shield

Note Device is not available on Base Feature touch panels, part numbers EA7 S6M R and EA7 T6CL R

Note Use USB Programming Cable, for example p/n USB CBL AB15

Ethernet Port

The Ethernet port can be used several ways: for programming the panel (downloading a project), for PLC communication, and for the advanced features, such as sending e-mail, web server, FTP access, and allowing users to access and control the panel remotely.

The Ethernet connector is an RJ-45 Module jack type. It has a green and an orange LED.

- The orange LED indicates the Ethernet communication status. It illuminates when there is data activity on the network.
- The green LED indicates link status and illuminates when a link is established.

Ethernet connections to devices:

- *Direct*LOGIC Ethernet
- Modbus TCP/IP
- Allen-Bradley EtherNet/IP™ Server - Generic I/O Messaging (ControlLogix™, CompactLogix™, and FlexLogix™)
- Allen-Bradley EtherNet/IP Client - Tag Based (ControlLogix, CompactLogix, and FlexLogix)
- Allen-Bradley EtherNet/IP Client - (MicroLogix and SLC5)
- Entivity Modbus TCP/IP
- Mitsubishi Q/QnA Ethernet
- Omron Ethernet FINS
- Siemens Ethernet ISO over TCP

Note: *The base panels (-R part numbers) do not include an Ethernet port, and do not have these capabilities.*

Refer to http://cmore.automationdirect.com for the latest driver information.

Communications Ports (cont'd)

USB Port B

Program *C-more* via the USB programming port. It's fast and easy, with no baud rate settings, parity, or stop bits to worry about. We stock standard USB cables for your convenience, such as part no. USB-CBL-AB15. USB Port B can be used to upload or download projects to and from a PC (personnel computer).

USB Port A

The Universal Serial Bus (USB) type A port is a standard feature for all models and can be used to connect various USB HID (Human Input Device) devices to the panel, such as:

- USB pen drives, (ADC p/n SDCZ4-2048-A10)
- USB keyboards
- USB barcode scanners
- USB card scanners

C-more can log data to the USB pen drive as well as load projects to the panel from the pen drive. You can also back up project files and panel firmware.

Sound Interface (Audio Line Out)

When attached to an amplifier and speaker(s), *C-more* can play warning sounds, or pre-recorded messages such as: "conveyor is jammed". *C-more* supports WAV type files. The output is stereo. See the next page for the WAV file specifications. Various "Objects" in the *C-more* programming software support sounds. Sound files are stored in the sound library. See the *C-more* programming software help support for additional details.

PLC Port

The PLC port is an RS-232C, RS-422A or RS-485A female 15-pin D-sub connector. Use this port for serial connections to PLCs. The port supports the following PLC protocols:

- All *AutomationDirect.com* PLCs:
  - CLICK
  - *Direct*LOGIC K-sequence
  - *Direct*NET
  - Modbus (Koyo Addressing)
- Allen Bradley:
  - DF1 Full & Half Duplex
  - DF1 Full & Half Duplex - Tag Based
  - PLC5 DF1
  - DH485
- Modbus RTU
- Entivity Modbus RTU
- GE SNPX (90/30, 90/70, Micro 90, VersaMax Micro)
- Omron:
  - Host Link (C200 Adapter, C500)
  - FINS (CJ1, CS1)
- Mitsubishi
  - Melsec FX
  - QnA
- Siemens PPI (S7-200 CPU)

Audio WAV File Specifications

The *C-more* Audio Line Out port supports the following WAV file specifications:

Audio Format (codec): PCM

Audio Sample Rate: 11 kHz, 22 kHz or 44 kHz

Channels: 1 (mono) or 2 (stereo)

Audio Sample Size: 8-bit or 16-bit

Memory Organization

The following diagram outlines the relationships between the internal memory of the panel and any external memory device. It also shows how the various memory areas can be used for different functions. The 6”, 8” and 10” panels have a project area of **10 MB**, while the 12” and 15” panels have a **40 MB** project area.

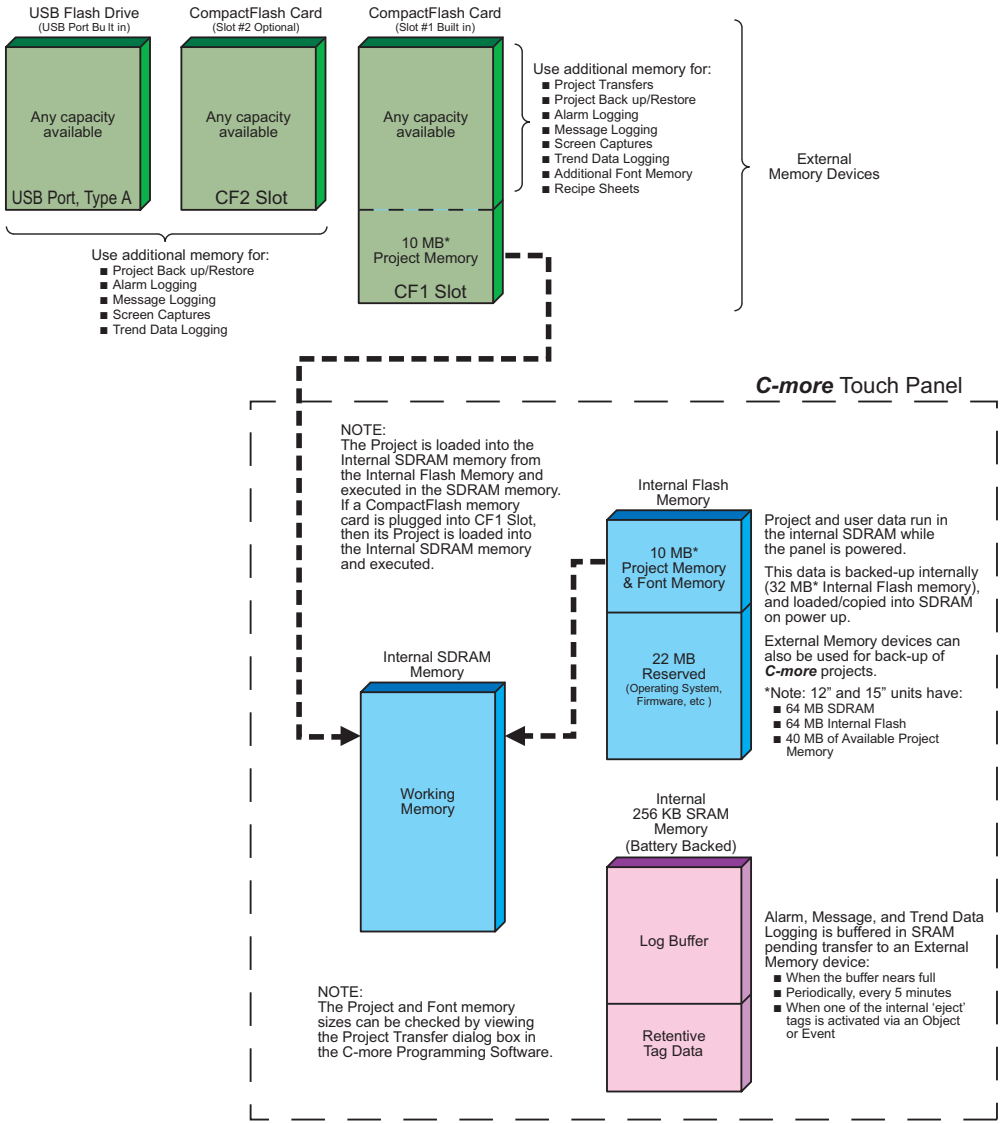

Handling External Memory Devices

Consider the following to prevent data error risk when utilizing data logging.

- Do not turn off power to the *C-more* touch panel at any time the external memory device is being accessed.
- Do not remove any external memory device when the device is being accessed by the touch panel.

Note: *A system tag, such as* ***SYS %device% WriteStatus*** *can be used to detect when the external memory device is being accessed. See the* ***C-more*** *programming software on-line help for additional information on* ***System Tag Names****.*

- If a CompactFlash memory card is plugged into the CF1 slot while the panel is running, the project will continue to run from the project that is currently in the internal SDRAM. If power is cycled and there is a good project stored on the CompactFlash, then that project will be loaded into the internal SDRAM and ran.
- Be sure to backup the memory device at regular intervals.
- A CompactFlash memory card plugged into the CF1 slot that includes a project that is being run cannot be used for backup.
- If you suspect the memory device is bad, you may want to use a PC to re-format the device, or use a known good memory device.

Note: *The* ***C-more*** *touch panel requires that all external memory devices be formatted with a* ***FAT*** *or* ***FAT32*** *file system. The* ***FAT*** *file system is recommended for better performance.*

- The number of times the memory device can be written to is limited, approximately 300,000 times. Consequently, frequent writing at short intervals may shorten the service life of the memory device. Try to use as long as possible sampling times for logging data to reduce the amount of times the memory device is accessed.

Power Loss Detection and Power Retention Period

It is important to have an understanding of how the touch panel handles power loss as it applies to data logging and retentive name tag data. The C-more touch panel system CPU will receive a power loss interrupt signal when the incoming DC voltage level drops below 19.2 VDC. If using the optional AC/DC Power Adapter, EA-AC, then an interrupt signal will occur when the incoming AC voltage level drops below 58 VAC (+/- 5%). When power loss is detected, the backlight will turn off immediately to allow extending the power retention period. Any logging to either CompactFlash memory or an USB pen drive will also stop. This will allow time to complete writing any data to the internal 256 KB SRAM. The 256 KB SRAM along with CPU Date/Time registers are battery backed.

Because the 24 VDC power retention time period is very short, only data backup to the internal 256 KB SRAM memory buffer can occur. When power is restored, the contents of the SRAM will be written to the selected memory storage device.

Data Logging Function and Logging Media

Considering the power retention period and the CF card write performance, the EA-CF-CARD memory card is recommended to minimize data loss. It is also recommended to further reduce the risk of losing data, a uninterruptible power supply (UPS) should be used to provide power to the touch panel.

Data Logging - Memory Device Full

The following explains what occurs when logging data from an object, such as Line Trending, and the memory device becomes full. The memory device can be a USB pen drive plugged into the USB port, or a CompactFlash memory card plugged into location CF1 or CF2.

The answer is when the memory device that is being used for logging is full, the panel will stop writing to the log and a RTE-001 Runtime Error will be displayed on the screen. The displayed error message will read "Log Failed. Not enough Memory Space in %Device%". (%Device% can be USB, CF1, or CF2.) The data logging object will continue to execute.

The user can monitor the System Tag "SYS %DEVICE% FreeMemory" with the Event Manager, and display a message to the operator to warn when the memory device is close to full.

The user can also use a Pushbutton object with the tag "SYS Copy Log to %Device%" to copy ALL logs on ALL other devices to %Device% and therefore save the current data.

For example, if the application is logging to CF1 and CF2, the user can monitor "SYS CF1 FreeMemory" and "SYS CF2 FreeMemory" in the Event Manager. When the value of either gets below a set value in the Event Manager, then the Event Manger can issue an Alarm, send an email, etc. The operator can then insert a USB pen drive into the panel's USB port, and press a pushbutton that is configured with System Tag "SYS Copy Log to USB". This action will copy all of the logged data to the USB pen drive from both CF1 and CF2. The operator can then use the System Setup Screen's Memory selection to clear both CompactFlash CF1 and CF2.

This example can work with different combinations of the memory devices, but the preferred method is using a USB pen drive because it is the easiest device to insert and remove.

Chemical Compatibility

The C-more touch panels comprise three different materials that may be exposed to outside elements: a gasket, a screen sheet and a bezel.

The C-more panel serial number can be found on the label on the back of the panel. It has the format MODEL NUMBER + yymddBsss. The characters yym represent the year and month of manufacture. These are the characters that determine the materials used in construction of your panel as follows:

All panel gaskets are Silicone

Panel Size	Date Code	Screen Sheet Material	Bezel Frame Material
6 inch	05m through 077	PET	ABS
	078 through current	PC	
8 inch	05m through 077	PET	
	078 through 082	PC	
	083 through current		PPE/PS
10 inch	05m through 077	PET	ABS
	078 through 081	PC	
	082 through current		PPE/PS
12 and 15 inch	05m through 077	PET	ABS
	078 through 081	PC	
	082 through 097		PPE/PS
	098 through current	PET	

Chemical compatibility tables begin on the next page.

Chemical Compatibility (cont'd)

The following tables are provided to make you aware of the general compatibility between chemicals that may be present in your work environment and the various materials used in the manufacture of the panel. Use the table to determine those chemicals that are safe to use around your *C-more* touch panel and those that may harm it. The tables are made up of specifications provided by the manufacturer of the listed material. The tables rate these chemicals as either Excellent, Good, Not Recommended, or Not Usable. Because the ratings are for ideal conditions at room temperature, consider all factors when evaluating your application. Areas left blank have not been tested by the manufacturer and therefore information of compatibility is not available.

The values in [**brackets**] represent the chemical's density at room temperature, 20 °C.

Chemicals	Screen Sheet – PET [Density %, Temperature °C]	Screen Sheet – PC [Density %, Temperature °C]	6" Bezel – ABS [Density %, Temperature °C]	8"-15" Bezel – PPE / PS [Density %, Temperature °C]	Gasket – Silicone [Density %, Temperature °C]
Acetaldehyde			Not Recommended	Not Usable	
Acetic Acid			[10, 20 °C] Excellent		
			[10, 20 °C] Excellent		
	[Glacial] Excellent		[50, 20 °C] Not Usable		
			[50-70, 20 °C] Not Usable		
			[100, 20 °C] Not Usable		
Acetic anhydride			Not Recommended		
Acetone	Excellent	Not Usable	Not Usable	Not Usable	
Acetophenone			Not Usable	Not Usable	
Acetylene			Excellent		
Acrylonitrile			Not Recommended	Not Usable	
Alcohol - Butyl Ether					Excellent
Alcohol - Ethanol					Excellent
Alcohol - Isopropyl					Excellent
Alums NH3, Cr, K			Excellent		
Aluminum acetate			Excellent		
Aluminum bromide			Good		
Aluminum chloride			Good		
Aluminum nitrate			Excellent		
Aluminum sulfate			Excellent		
Ammonia [anhydrous] (10%)			Good	Good	Good
Ammonia gas [cold]			Good		
Ammonia liquid			Good		

Table continued at top of next page.

Chemical Compatibility (cont'd)

Chemicals	Screen Sheet – PET [Density %, Temperature °C]	Screen Sheet – PC [Density %, Temperature °C]	6" Bezel – ABS [Density %, Temperature °C]	8"-15" Bezel – ABS [Density %, Temperature °C]	Gasket – Silicone [Density %, Temperature °C]
Ammonia water	[12%] Not Usable		[12%] Not Usable		
	[28%] Not Usable		[28%] Not Usable		
Ammonium carbonate			Excellent		
Ammonium chloride			Excellent		
Ammonium hydroxide [ammonia water]			Excellent		
Ammonium nitrate			Excellent		
Ammonium nitrite			Excellent		
Ammonium persulfate			Excellent		
Ammonium phosphate			Excellent		
Ammonium sulfate			Excellent		
Amyl acetate			Not Usable		
Amyl alcohol			Good		
Aniline dyes			Not Recommended		
Animal oil [lard]			Good		
Aqua regia			Not Usable		
Arsenic acid			Not Recommended		
Asphalt			Excellent		
Barium chloride			Excellent		
Barium hydroxide			Excellent		
Barium sulfate			Excellent		
Barium sulfide			Excellent		
Beer			Excellent	Good	
Beet sugar liquors			Excellent		
Benzaldehyde			Not Recommended	Not Usable	
Benzene [Benzol]			Not Recommended	Not Usable	
Benzene	Excellent			Not Usable	Not Usable
Benzine			Not Usable	Not Usable	
Benzyl alcohol			Not Recommended	Not Usable	
Benzyl benzoate			Not Usable	Not Usable	
Benzyl chloride			Not Usable	Not Usable	
Borax			Excellent		
Boric acid			Good		
Bromine			Not Usable		
Butane			Excellent		

Table continued at top of next page.

Chemical Compatibility (cont'd)

Chemicals	Screen Sheet – PET [Density %, Temperature °C]	Screen Sheet – PC [Density %, Temperature °C]	6" Bezel – ABS [Density %, Temperature °C]	8"-15" Bezel – ABS [Density %, Temperature °C]	Gasket – Silicone [Density %, Temperature °C]
Butter			Good		
Butyl acetate			Not Usable	Not Usable	
Butyl acrylate			Not Usable	Not Usable	
Butyl alcohol [Butanol]			Good	Good	
Butyl Cellosolve		Not Usable			
Calcium actetate			Excellent		
Calcium bisulfite			Good		
Calcium chloride			Excellent		
Calcium hydroxide			Excellent		
Calcium hypochlorite			[20,RT] Excellent		
Calcium nitrate			Excellent		
Calcium sulfide			Excellent		
Cane sugar liquors			Excellent	Good	
Carbon dioxide			Excellent		
Carbon disulfide			Not Usable		
Carbonic acid			Good		
Carbon tetrachloride	Excellent		Not Usable	Not Usable	
Castor oil			Not Recommended	Not Usable	
China wood [tung] oil			Excellent	Not Usable	
Chlorine gas [dry]			Not Usable		
Chlorine gas [wet]			Not Usable		
Chlorine liquid			Not Usable		
Chlorinated solvents			Not Usable	Not Usable	
Chloroacetic acid			Not Usable	Not Usable	
Chloroacetone			Not Usable	Not Usable	
Chloroform	Excellent		Not Usable	Not Usable	
Chlorophenol	Not Usable			Not Usable	
Chlorosulfonic acid			Not Usable	Not Usable	
Chlorotoluene			Not Usable	Not Usable	
Chromic acid			[2, 70 °C] Not Usable	[2, 70 °C] Not Usable	
			[5, 70 °C] Not Usable	[5, 70 °C] Not Usable	
			[10, 70 °C] Not Usable	[10, 70 °C] Not Usable	
			[25, 70 °C] Not Usable	[25, 70 °C] Not Usable	
Citric acid			Good		

Table continued at top of next page.

Chemical Compatibility (cont'd)

Chemicals	Screen Sheet – PET [Density %, Temperature °C]	Screen Sheet – PC [Density %, Temperature °C]	6" Bezel – ABS [Density %, Temperature °C]	8"-15" Bezel – ABS [Density %, Temperature °C]	Gasket – Silicone [Density %, Temperature °C]
Cocoanut oil			Good	Not Usable	
Copper chloride			Excellent		
Copper cyanide			Excellent		
Copper sulfate			Excellent		
Corn oil			Good	Not Usable	
Cottonseed oil			Good	Not Usable	
Creosol			Not Usable	Not Usable	
Cyclohexane			Good	Not Usable	
Cyclohexanol			Good	Not Usable	
Cyclohexanone		Not Usable	Not Usable	Not Usable	
Developing solutions [Hypos]			Excellent		
Dibutyl phthalate [DBP]			Not Usable	Not Usable	
Dichlorobenzene			Not Usable	Not Usable	
Diethylene glycol			Good	Not Usable	
Diethyl ether			Not Usable	Not Usable	
Disopropyl ketone			Not Usable	Not Usable	
Dimethyl aniline			Not Usable	Not Usable	
Dimethyl formamide			Not Usable	Not Usable	
Dioxane			Not Usable	Not Usable	
Dipentene			Not Usable	Not Usable	
Epichlorohydrine			Not Usable	Not Usable	
Ethyl acetate	Excellent		Not Usable	Not Usable	
Ethyl acetoacetate			Not Usable	Not Usable	
Ethyl acrylate			Not Usable	Not Usable	
Ethyl alcohol			Not Recommended	Good	
Ethyl benzene			Not Usable	Not Usable	
Ethyl chloride			Not Usable	Not Usable	
Ethylene chlorohydrin			Not Usable	Not Usable	
Ethylene diamine			Not Usable	Not Usable	
Ethylene dichloride			Not Usable	Not Usable	
Ethylene glycol			Excellent	Good	
Ethylene oxide			Not Usable	Not Usable	
Fatty acid			Good	Not Usable	
Ferric chloride			Excellent		

Table continued at top of next page.

Chemical Compatibility (cont'd)

Chemicals	Screen Sheet – PET [Density %, Temperature °C]	Screen Sheet – PC [Density %, Temperature °C]	6" Bezel – ABS [Density %, Temperature °C]	8"-15" Bezel – ABS [Density %, Temperature °C]	Gasket – Silicone [Density %, Temperature °C]
Ferric nitrate			Excellent		
Ferric sulfate			Excellent		
Fluorboric acid			Not Recommended		
Fluorobenzene			Not Usable	Not Usable	
Fluosilicic acid			Not Recommended		
Formaldehyde			[40, 20 °C] Good	[40, 20 °C] Not Usable	
Formic acid			[25, 20 °C] Excellent		
			[50, 20 °C] Good		
			[90, 20 °C] Not Recommended		
Freon	[45°C] Excellent				
Freon 11			Not Recommended		
Freon 12			Good		
Freon 113			Not Usable		
Freon 114			Not Recommended		
Fuel oil			Good		
Gasoline (Leaded)		Good	Not Recommended	Not Usable	Not Usable
Gasoline (Unleaded)		Good	Not Recommended	Not Usable	Not Usable
Gelatin			Excellent		
Glauber's salt			Excellent		
Glucose			Excellent		
Glue			Excellent		
Glycerin			Excellent	Good	
Grease			Excellent	Good	
Hexane			Not Recommended	Not Usable	
Hexyl alcohol			Good	Not Usable	
Hydrobromic acid			[20, 20 °C] Not Usable		
			[20-70, 20 °C] Not Usable		
			[37, 20 °C] Not Usable		
Hydrochloric acid	[18%] Excellent		[10, 20 °C] Excellent	[10, 20 °C] Good	Good
			[20, 20 °C] Good		
	[35%] Good	[35%] Good	[20-80, 20 °C] Not Recommended		
			[38,20 °C] Not Recommended		

Table continued at top of next page.

Chemical Compatibility (cont'd)

Chemicals	Screen Sheet – PET [Density %, Temperature °C]	Screen Sheet – PC [Density %, Temperature °C]	6" Bezel – ABS [Density %, Temperature °C]	8"-15" Bezel – ABS [Density %, Temperature °C]	Gasket – Silicone [Density %, Temperature °C]
Hydrocyanic acid			Excellent		
Hydrofluoric acid			[10, 20 °C] Excellent		
			[20, 20 °C] Excellent		
			[40, 20 °C] Good		
Hydrofluoric acid anhydrous			Not Usable		
Hydrogen			Excellent		
Hydrogen peroxide			[5, 20 °C] Not Recommended		
			[5-50, 20 °C] Not Recommended		
			[30, 20 °C] Not Usable		
Hydrogen sulfide			Excellent		
Hydorquinone			Not Recommended		
Hypochlorous acid			Not Recommended		
Isobutyl alcohol		Good	Good	Good	
Isopropyl acetate			Not Usable	Not Usable	
Isopropyl alcohol			Good	Good	
JP fuels (1-6)			Good	Not Usable	
Kerosene			Good	Not Usable	
Lacquer			Not Usable		
Lactic acid			Excellent		
Lard			Excellent		
Lead acetate			Excellent		
Lead nitrate			Good		
Lead sulfamate			Good		
Linoleic acid			Excellent		
Linseed oil			Excellent	Not Usable	
Liquified petroleum gas [LPG]			Excellent		
Lubricating oil			Excellent		
Lye solution			Excellent		
Magnesium chloride			Excellent		
Magnesium hydroxide			Excellent		
Magnesium sulfate			Excellent		
Maleic acid			Excellent		

Table continued at top of next page.

Chemical Compatibility (cont'd)

Chemicals	Screen Sheet – PET [Density %, Temperature °C]	Screen Sheet – PC [Density %, Temperature °C]	6" Bezel – ABS [Density %, Temperature °C]	8"-15" Bezel – ABS [Density %, Temperature °C]	Gasket – Silicone [Density %, Temperature °C]
Marcuric chloride			Excellent		
MEK		Not Usable	Not Usable	Not Usable	
Mercury			Excellent		
Metacresol	Not Usable				
Methylene Chloride		Not Usable			
Methyl acetate			Not Usable	Not Usable	
Methyl alcohol	Excellent		Not Recommended	Not Usable	
Methyl Benzoate	Not Usable				
Methyl chloride			Not Usable	Not Usable	
Methyl ethyl ketone [MEK]		Not Usable	Not Usable	Not Usable	
Methyl isobutyl ketone [MIBK]			Not Usable	Not Usable	
Methyl methacrylate			Not Usable	Not Usable	
Methyl dichloride			Not Usable	Not Usable	
Methyl Salicylate	Not Usable				
Milk			Excellent		
Mineral oil			Excellent		Excellent
Monochlorobenzene	Not Usable		Not Usable	Not Usable	
Naptha			Good		
Napthalene			Excellent		
Napthenic acid			Good		
Natural gas			Excellent		
Natural oil					Excellent
Nickel acetate			Excellent		
Nickel chloride			Excellent		
Nickel sulfate			Excellent		
Nitric acid	[35%] Good		[10, 20 °C] Good	[10, 20 °C] Not Usable	
			[10-70, 20 °C] Not Usable	[10-70, 20 °C] Not Usable	
			[30, 20 °C] Not Usable	[30, 20 °C] Not Usable	
	[60%] Not Usable		[30-70, 20 °C] Not Usable	[30-70, 20 °C] Not Usable	
			[61.3, 20 °C] Not Usable	[61.3, 20 °C] Not Usable	
			[Vapor, 20 °C] Not Usable	[Vapor, 20 °C] Not Usable	

Table continued at top of next page.

Chemical Compatibility (cont'd)

Chemicals	Screen Sheet – PET [Density %, Temperature °C]		6" Bezel – ABS [Density %, Temperature °C]	8"-15" Bezel – ABS [Density %, Temperature °C]	Gasket – Silicone [Density %, Temperature °C]
Nitrobenzene	Not Usable		Not Usable	Not Usable	
Nitroethane			Not Usable	Not Usable	
Nitromethane			Not Usable	Not Usable	
Nitropropane			Not Usable	Not Usable	
Nitrogen			Excellent	Good	
Octyl alcohol			Good		
Oleic acid			Excellent	Not Usable	
Olive oil			Excellent	Not Usable	
Oxalic acid			Excellent		
Oxygen			Excellent		
Ozone			Not Recommended		
Palmitic acid			Excellent		
Perchloroethylene			Not Usable	Not Usable	
Petroleum			Excellent	Not Usable	
Phenol	Not Usable		Not Usable	Not Usable	
Phospheric acid			[50, 20 °C] Good		
			[50-70, 20 °C] Not Usable		
			[75, 20 °C] Not Usable		
Pickling solution			[Sulfuric acid 20% + nitric acid 4%] Good		
			[Sulfuric acid 40% + nitric acid 15%] Not Recommended		
Pine oil			Good		
Potassium chloride			Excellent		
Potassium cyanide			Excellent		
Potassium dichromate			[10, 20 °C] Excellent		
Potassium hydroxide	[10%] Not Usable		Excellent		
Potassium nitrate			Excellent		
Potassium permangante			[5, 20 °C] Excellent		
Potassium sulfate			Excellent		
Propane			Excellent		
Propyl acetate			Not Usable	Not Usable	
Propyl alcohol			Good	Good	
Salt water			Excellent	Good	

Table continued at top of next page.

Chemical Compatibility (cont'd)

Chemicals	Screen Sheet – PET [Density %, Temperature °C]	Screen Sheet – PC [Density %, Temperature °C]	6" Bezel – ABS [Density %, Temperature °C]	8"-15" Bezel – ABS [Density %, Temperature °C]	Gasket – Silicone [Density %, Temperature °C]
Silicone oils			Good	Good	
Silver nitrate			Excellent		
Skydrol 500			Not Usable		
Skydrol 7000			Not Usable		Not Usable
Soap solutions			Excellent		
Soda ash			Excellent		
Sodium bicarbonate			Excellent		
Sodium bisulfate			Good		
Sodium borate			Excellent		
Sodium carbonate	[10%] Excellent				
Sodium chloride			Excellent	Good	
Sodium cyanide			Excellent		
Sodium hydroxide	[40%] Not Usable	[40%] Not Usable	[10, 20 °C] Excellent		Good
			[30, 20 °C] Excellent		
			[30-70, 20 °C] Not Usable		
Sodium hypochlorite			[5, 20 °C] Excellent		
			[5-70, 20 °C] Not Usable		
Sodium metaphosphate			Excellent		
Sodium nitrate			Excellent		
Sodium perborate			Excellent		
Sodium peroxide			Not Usable		
Sodium phosphate			Excellent		
Sodium thiosulfate			Excellent		
Sodium sulfate [Glauber's salt]			Good		
Sodium sulfite			Excellent		
Soybean oil			Excellent		
Stannic chloride			Good		
Steam			[below 150 degrees] Not Usable		
			[above 150 degrees] Not Usable		
Stearic acid			Excellent		
Styrene			Not Recommended	Not Usable	
Sucrose solutions			Excellent	Good	

Table continued at top of next page.

Chemical Compatibility (cont'd)

Chemicals	Screen Sheet – PET [Density %, Temperature °C]	Screen Sheet – PC [Density %, Temperature °C]	6" Bezel – ABS [Density %, Temperature °C]	8"-15" Bezel – ABS [Density %, Temperature °C]	Gasket – Silicone [Density %, Temperature °C]
Sulfur			Excellent		
Sulfur dioxide			Good		
Sulfuric acid	[40%] Excellent		[10, 20 °C] Excellent	[10, 20 °C] Good	Not Usable
			[10-70, 20 °C] Not Usable		
	[60%] Excellent		[30, 20 °C] Excellent		
			[30-70, 20 °C] Not Recommended		
	[70%] Excellent		[98, 20 °C] Not Usable		
			[Vapor, 20 °C] Not Usable		
	[80%] Not Usable				
Sulpherous acid			[10, 20 °C] Good		
Tannic acid			Good		
Tar			Not Recommended		
Tartaric acid			Excellent		
Terpineol			Not Recommended		
Tetrachloroethane	Excellent		Not Usable		
Tetraethyl lead			Good	Not Usable	
Tetralin	Not Usable				
Tetrahydrofuran			Not Usable	Not Usable	Not Usable
Thionyl chloride			Not Usable	Not Usable	
Toluene		Not Usable	Not Usable	Not Usable	Not Usable
Trichloroethylene [Trichlene]			Not Usable	Not Usable	
Triethanol amine			Good	Not Usable	
Turpentine oil			Good	Not Usable	
Vegetable oil			Good	Not Usable	
Vinegar			Excellent	Good	
Water			Excellent	Good	
Whiskey			Excellent		
Xylene	Excellent	Not Usable	Not Usable	Not Usable	
Zeolites			Excellent		
Zinc acetate			Excellent		
Zinc chloride			Excellent		
Zinc sulfate			Excellent		

Accessories

Chapter 3

In This Chapter...

Accessories 3–2
Accessories Overview 3–3
Accessories at a Glance 3–4
AC/DC Power Adapter – EA-AC 3–5
Expansion Assembly – EA-EXP-OPT 3–9
CF Card Interface Module – EA-CF-IF 3–12
CompactFlash Memory – EA-CF-CARD 3–14
6″ Adapter Plate – EA-6-ADPTR 3–17
D-SUB 15-pin 90 degree Comm Port Adapter – EA-ADPTR-4 3–19
D-SUB 15-pin to Terminal Block Adapter – EA-COMCON-3 3–20
Non-glare Screen Covers – EA-xx-COV2, xx = 6, 8, 10, 12 or 15 3–22
USB Pen Drive – SDCZ4-2048-A10 3–24

Accessories

Part Number	Description	Part Number	Description
EA-AC	The AC/DC Power Adapter, EA-AC, is for ***C-more*** touch panels only, and is powered from a 100-240 VAC, 50/60 Hertz power source. The adapter provides 24 VDC @ 1.5 A. Power Fault features help protect data being logged to CompactFlash during power failures. The ***C-more*** panel must have firmware version 1.21 Build 6.18E or higher for proper operation.	**EA-6-COV2**	Non Glare 6 Inch Screen Cover, protective overlay used to protect the touch screen while helping to reduce the glare from external light sources. (pk of 3)
EA-EXP-OPT	Expansion Assembly, is used to allow installation of the optional CF Card Interface Module for CF card use and also provides a slot for future option modules.	**EA-8-COV2**	Non Glare 8 Inch Screen Cover, protective overlay used to protect the touch screen while helping to reduce the glare from external light sources. (pk of 3)
EA-CF-IF	CF Card Interface Module, is used with the Expansion Assembly to allow use of CF cards, such as the CompactFlash Memory, p/n EA-CF-CARD.	**EA-10-COV2**	Non Glare 10-Inch Screen Cover, protective overlay used to protect the touch screen while helping to reduce the glare from external light sources. (pk of 3)
EA-CF-CARD	CompactFlash Memory Card Option, industrial grade, high speed memory for non-volatile storage.	**EA-12-COV2**	Non Glare 12-Inch Screen Cover, protective overlay used to protect the touch screen while helping to reduce the glare from external light sources. (pk of 3)
EA-6-ADPTR	6 Inch Adapter Plate, allows C-more 6" touch panels to be mounted into EZTouch 6" non-slim bezel cutouts without having to make alterations. NEMA 4/4X.	**EA-15-COV2**	Non Glare 15-Inch Screen Cover, protective overlay used to protect the touch screen while helping to reduce the glare from external light sources. (pk of 3)
EA-ADPTR-4	D-SUB 15-pin 90 degree PLC serial communication port adapter to allow a PLC communication cable to be plugged in at a 90 degree angle to reduce panel depth requirements.	**SDCZ4-2048-A10**	USB Pen Drive, 2GB, SanDisk Cruzer micro Pen Drive. Compatible with Windows 98SE, ME, 2000, XP and Mac OS 9.1.x+, OS X 10.1.2+ Certified Windows XP and Mac OS X. Recommended for use with the ***C-more*** Operator Touch Panels.
EA-COMCON-3	D-SUB 15-pin to 6-terminal PLC serial communication port adapter to allow wire terminal connections for RS-422/485 PLC communication cable.		

WARNING: Do NOT use EZTouch RAM or Flash memory cards with the *C-more* touch panels.

Accessories Overview

***NOTE**: CompactFlash memory card designations – CF Slot #1 is at the top of the panel and CF Slot #2 is the CF Card Interface Module, EA-CF-IF.*

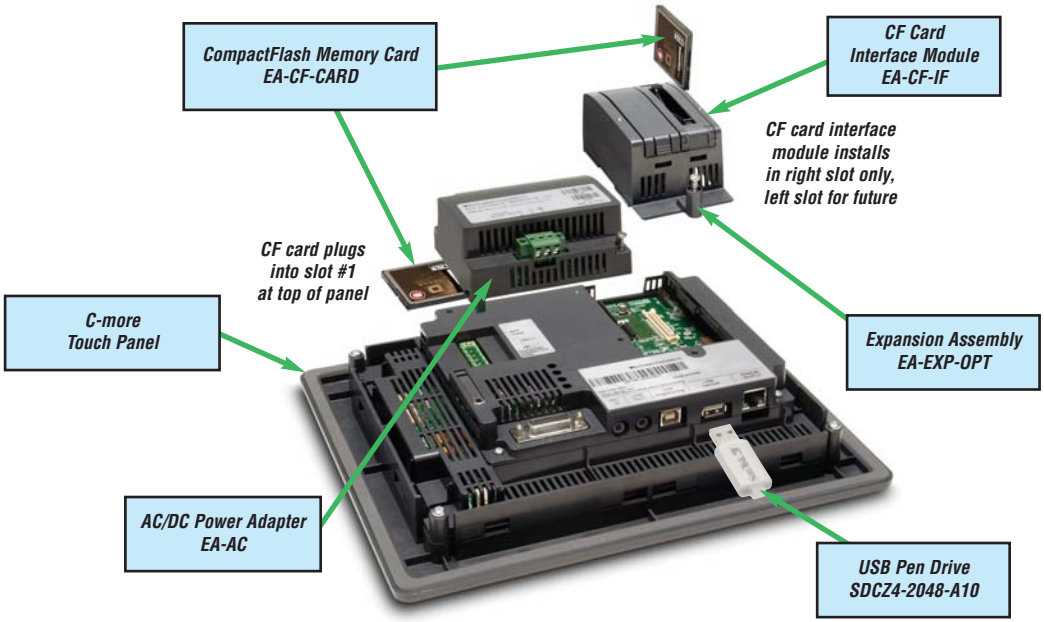

***NOTE**: Refer to the individual product data sheets that are included with the accessories for additional information.*

Accessories at a glance:

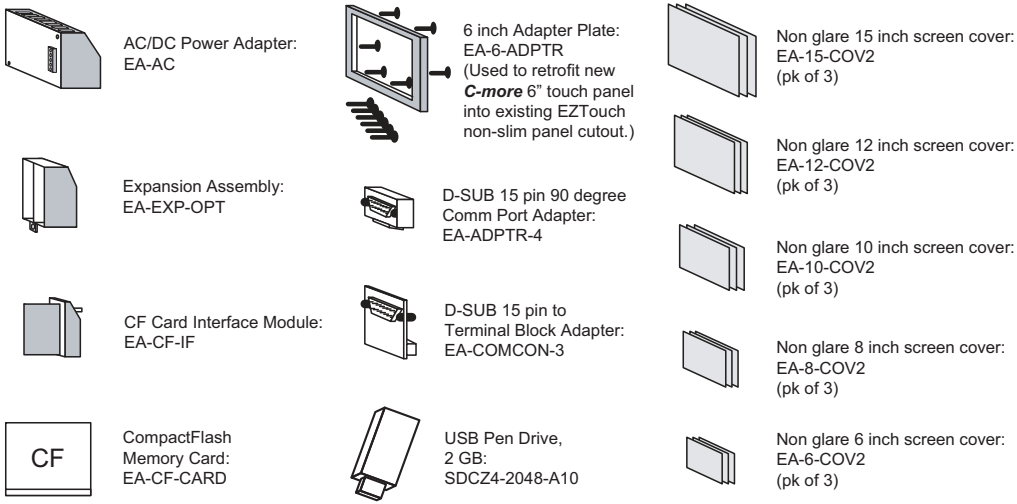

WARNING

To minimize the risk of potential safety problems, you should follow all applicable local and national codes that regulate the installation and operation of your equipment. These codes vary from area to area and it is your responsibility to determine which codes should be followed, and to verify that the equipment, installation, and operation are in compliance with the latest revision of these codes.

Equipment damage or serious injury to personnel can result from the failure to follow all applicable codes and standards. We do not guarantee the products described in this publication are suitable for your particular application, nor do we assume any responsibility for your product design, installation, or operation.

If you have any questions concerning the installation or operation of this equipment, or if you need additional information, please call us at 770-844-4200.

This publication is based on information that was available at the time it was printed. At ***Automationdirect.com***® we constantly strive to improve our products and services, so we reserve the right to make changes to the products and/or publications at any time without notice and without obligation. This publication may also discuss features that may not be available in certain revisions of the product.

AC/DC Power Adapter

The optional ***C-more*** AC/DC Power Adapter can be used to power the ***C-more*** touch panels from a 100-240 VAC, 50/60 Hertz, voltage source. The adapter provides 24 VDC @ 1.5 A to the touch panel's DC power connector and can be conveniently secured to the touch panel with two captive screws. The adapter provides a power loss signal to the touch panel that can be used to track power outages. This signal also allows the touch panel by way of a timed sequence to stop writing data to CompactFlash memory devices providing a controlled shutdown for increased data logging reliability.

WARNING: The AC/DC Power Adapter is not recommended for use with the EA7-T15C touch panel when operating temperatures are expected to exceed 40 °C [104 °F].

NOTE: *1.)The AC/DC Power Adapter, EA-AC, is for* ***C-more*** *touch panels only, and is powered from a 100-240 VAC, 50/60 Hertz power source. The adapter provides 24 VDC @ 1.5 A.*
2.) Power Fault features help protect data being logged to CompactFlash during power failures. The ***C-more*** *panel must have firmware version 1.21 Build 6.18E or higher for proper operation.*

Part No. EA-AC

AC/DC Power Adapter Wiring

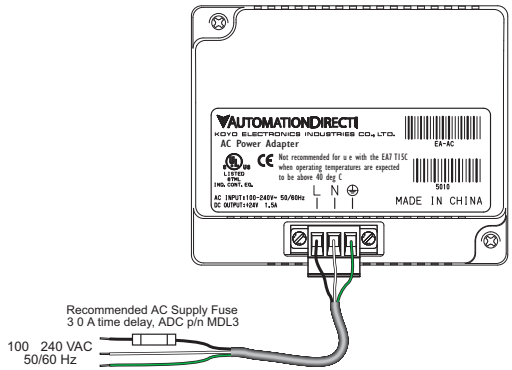

Tightening Torque	
Power supply cable torque	71 - 85 oz-in (0.5 - 0.6 Nm)
Power connector mounting torque	71 - 85 oz-in (0.5 - 0.6 Nm)
Mounting flange screw torque	57 - 71 oz-in (0.4 - 0.5 Nm)

NOTE: Use 60 / 75 °C copper conductors only.

AC/DC Power Adapter Specifications

AC/DC Power Adapter Specifications	
Part Number	**EA-AC**
Input Voltage & frequency	100-240 VAC; 50/60 Hertz
Voltage Range	85-264 VAC w/ Under Voltage and Over Voltage Shutdown
Permissible Momentary Power Failure	Within 40 ms, see explanation in the Note below.
Input Power	68 VA or less
Operating Temperature Range	0 °C to 50 °C [32 to 122 °F] (For the EA7-T15C touch panel, maximum temperature is 40° C, [104 °F] when using the AC/DC Power Adapter.)
Storage Temperature Range	-20 to 60 °C [-4 to 140 °F]
Operating & Storage Humidity	10-85% RH (non-condensing)
Noise Immunity	1000 VAC p-p (Pulse width 1 µs, rise time: 1 ns) With proper ground connection on AC terminal block.
Hi-pot	1000 VAC, 1 minute With proper ground connection on AC terminal block.
Insulation Resistance	500 VDC, 10 M ohm or above With proper ground connection on AC terminal block.
Vibration	Compliant with IEC61131-2
Shock	Pulse shape: Sine half wave, Peak acceleration: 147 m/s2 (15 G), X, Y, Z: 3 directions, 2 times each
Thermal Protection	140 °C [284 °F], with autorecovery
Short Circuit Protection	85 VAC: 2.6 A, 100 VAC: 2.8 A, 264 VAC: 3.9 A
Static Electricity Discharge Resistance	Compliant with IEC61000-4-2, Contact: 4 kV, Air: 8 kV
Agency Approvals	UL508, cUL, CE, EMC EN61132-2
Environment	No corrosive gas or conductive dust
Grounding	Ground resistance: less than 100 ohm
Diemnsions - inches [mm]	3.00” (H) x 3.66” (W) x 1.42” (D) [76.2 mm x 93.0 mm x 36.1 mm] (Excluding DC Power Connector.)
Weight	6.13 oz. [175 g]
Cooling Method	Natural convection when installed on vertically mounted touch panel.
Included Parts	AC Power Connector, Data Sheet Insert
Removable AC Power Connector	EA-AC-CON or DECA Switchlab MC101-508-03G Secure with (2) captive M2.5 screws, torque to 70 oz-in [0.5 Nm]
Output Voltage and Ripple	21.6 - 26.4 VDC, Ripple < 100 mV p-p
Output Current	Maximum 1.5 A
Inrush Current	For 100 VAC: 15 A, 3 ms or less For 240 VAC: 20 A, 3 ms or less
Power Fail Detection Voltage	58 VAC ±5%
Recommended AC Supply Fuse	3.0 A time delay, ADC p/n MDL3
Power Supply Cable Torque	71 - 85 oz-in (0.5 - 0.6 Nm)
Mounting to Touch Panel	Secure with (2) spring loaded captive M3-20 screws, torque to 50 oz-in [0.35 Nm]

***NOTE**: Permissible momentary power failure: The **C-more** touch panel will turn off the LCD backlight instantly when the power failure is detected (less than 58 VAC +/- 5%) for extending the Power Retention Period that enables the CPU to run longer. The backlight turns on automatically when the power returns to the **C-more** operating voltage.*

AC/DC Power Adapter Dimensions

Dimensions

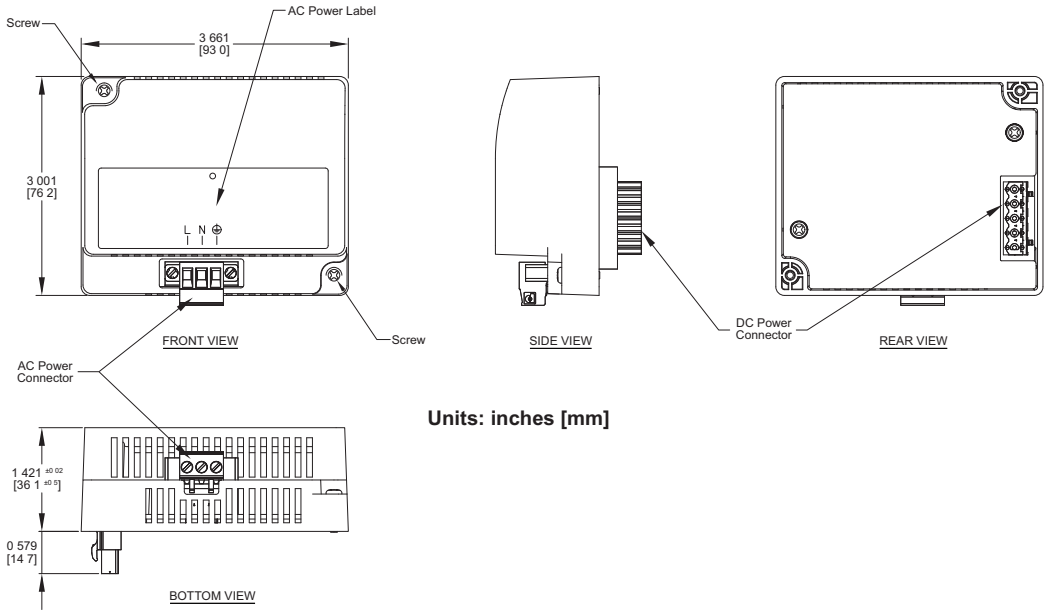

Units: inches [mm]

Panel Depth with AC/DC Power Adapter Installed

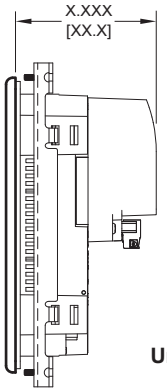

EA7-S6M-R = 2.921 [74.2]
EA7-T6CL-R = 2.921 [74.2]
EA7-S6C-R = 2.921 [74.2]
EA7-S6M = 2.921 [74.2]
EA7-S6C = 2.921 [74.2]
EA7-T6C = 2.921 [74.2]
EA7-T6CL = 2.921 [74.2]
EA7-T8C = 3.157 [80.2]
EA7-T10C = 3.106 [78.9]
EA7-T12C = 3.102 [78.8]
EA7-T15C = 3.075 [78.1]

Units: inches[mm]

AC/DC Power Adapter Installation

WARNING: This procedure should only be performed by qualified personnel who are experienced in working with electronic equipment. Take the necessary steps to prevent damage that may be caused by static electricity discharge. Disconnect input power to the touch panel before proceeding.

Preparation: Place the touch panel face down on a lint-free soft surface to prevent scratching the display screen if not already installed in a control cabinet. Remove the DC power connector if it is installed.

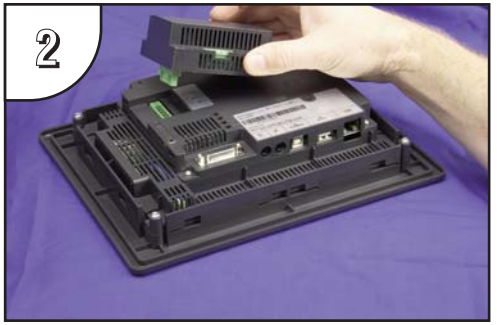

Insert the AC/DC Power Adapter into the touch panel's 5-position DC power connector.

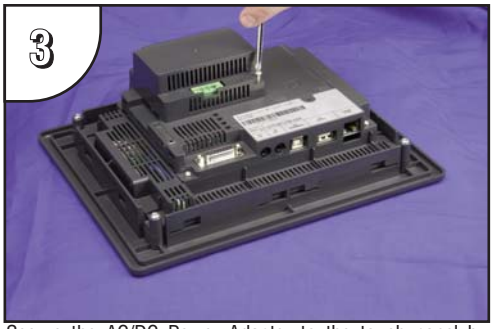

Secure the AC/DC Power Adapter to the touch panel by tightening the two (2) spring loaded captive M3-20 screws to a torque of 50 oz-in [0.35 Nm].

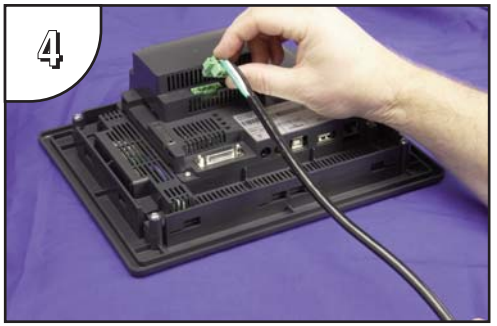

Plug the wired 3-pin AC Power Connector into its mating connector on the adapter and secure in place by tightening the two (2) captive M2.5 screws to a torque of 70 oz-in [0.5 Nm]. (Wiring details shown on page 3-5.)

Expansion Assembly

The *C-more* Expansion Assembly is used to allow installation of the optional CF Card Interface Module for CF card use and also provides a slot for future option modules.

Part No. EA-EXP-OPT

Expansion Assembly Dimensions

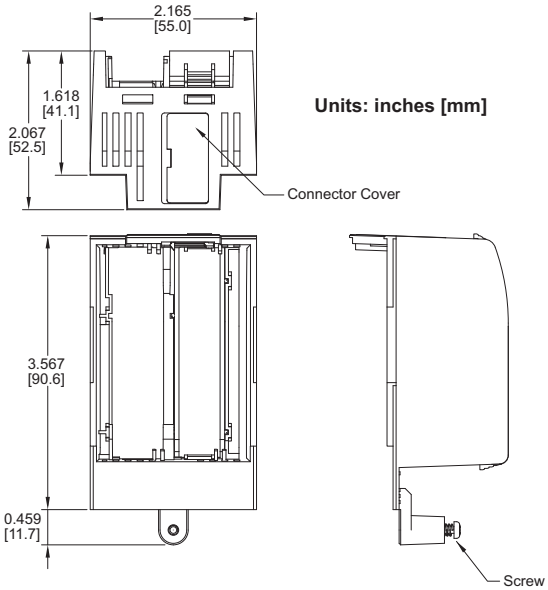

Panel Depth with Expansion Assembly Installed

EA7-S6M = 2.921 [74.2]
EA7-S6C = 2.921 [74.2]
EA7-T6C = 2.921 [74.2]
EA7-T6CL = 2.921 [74.2]
EA7-T8C = 3.157 [80.2]
EA7-T10C = 3.106 [78.9]
EA7-T12C = 3.102 [78.8]
EA7-T15C = 3.075 [78.1]

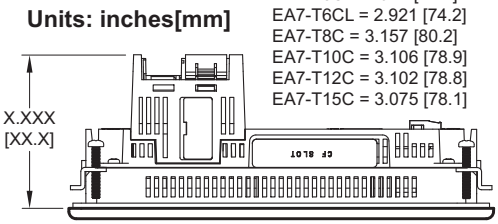

Expansion Assembly Details

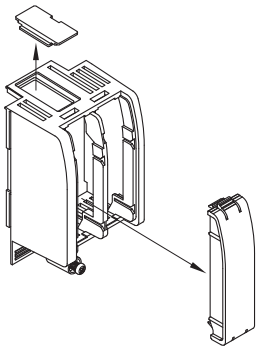

Expansion Assembly Installation

WARNING: This procedure should only be performed by qualified personnel who are experienced in working with electronic equipment. Disconnect input power to the touch panel before proceeding.

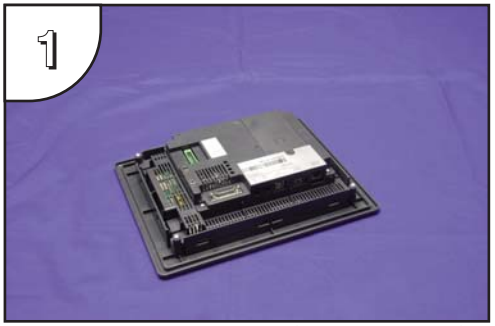

Preparation: Place the touch panel face down on a lint-free soft surface to prevent scratching the display screen if not already installed in a control cabinet.

Remove expansion area cover by pressing down on the left and right line markings and at the same time, slide the cover in the direction of the embossed arrow.

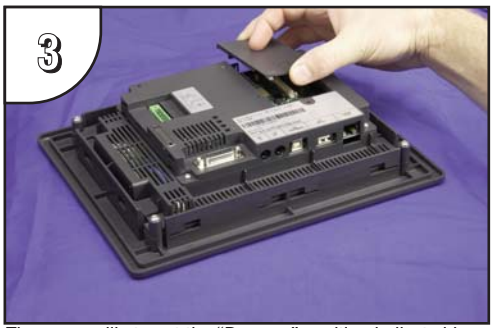

The cover will stop at the “Remove” position indicated by a tic mark on the cover lining up with the “Remove” tic mark on the panel. At this position, lift the cover up.

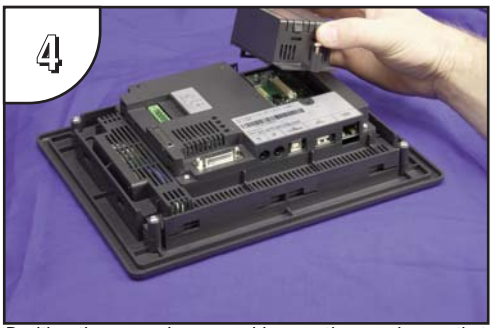

Position the expansion assembly over the opening so that the tic mark to the right of the fastening screw lines up with the “Remove” tic mark.

Expansion Assembly Installation (cont'd)

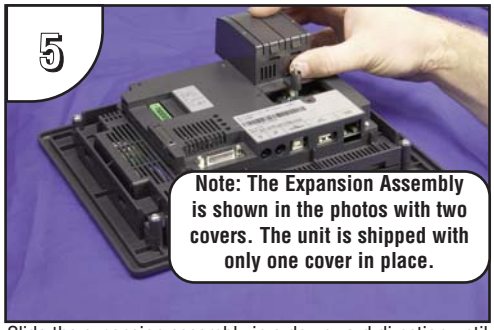

Slide the expansion assembly in a downward direction until the tic marks at the home position line up.

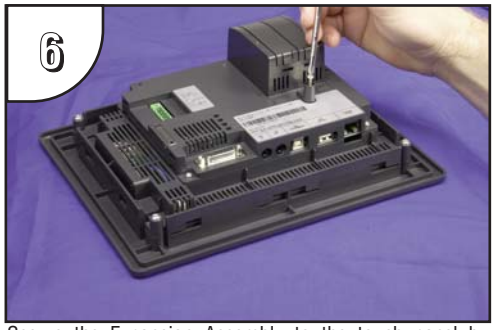

Secure the Expansion Assembly to the touch panel by tightening the spring loaded captive M3-20 screw to a torque of 50 oz-in [0.35 Nm].

CF Card Interface Module

The *C-more* CF Card Interface Module is used with the Expansion Assembly to allow use of CompactFlash™ cards, such as the CompactFlash Memory, EA-CF-CARD.

Part No. EA-CF-IF

CF Card Interface Module Dimensions

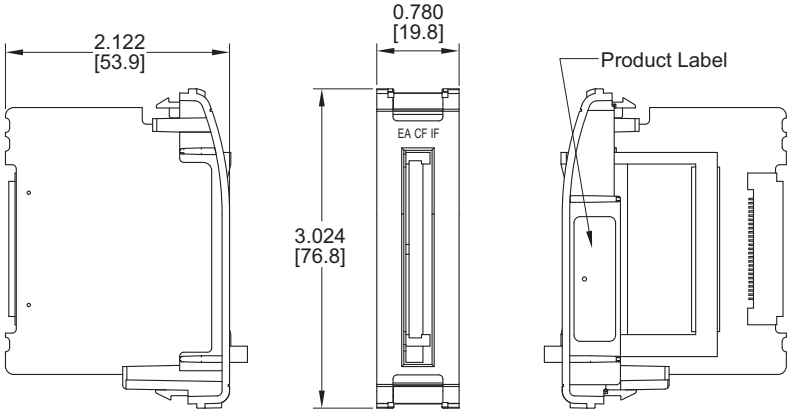

Units: inches [mm]

CF Card Interface Module Installation

WARNING: The CF Card Interface Module is designed to be installed in the right hand side slot of the Expansion Assembly only. This procedure should only be performed by qualified personnel who are experienced in working with electronic equipment. Take the necessary steps to prevent damage that may be caused by static electricity discharge. Disconnect input power to the touch panel before proceeding.

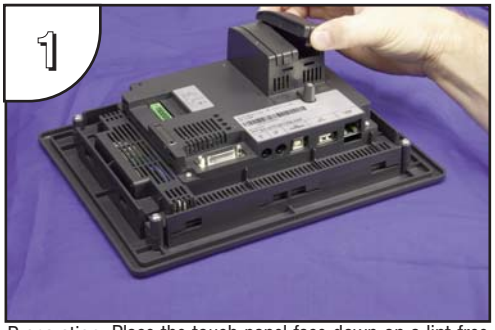

Preparation: Place the touch panel face down on a lint-free soft surface to prevent scratching the display screen if not already installed in a control cabinet. Again, make sure the input power is disconnected. Remove the right hand side protective slot cover, if it is installed, by squeezing the pinch tabs and lifting the cover off.

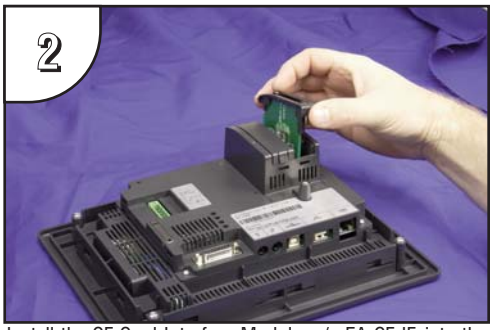

Install the CF Card Interface Module, p/n EA-CF-IF, into the right hand side slot by carefully aligning the female connector of the interface module with the male connector on the touch panel. There are PCB guides at the top and bottom of the slot to accept the edge of the Interface Module's printed circuit board. It is also helpful to preset the locking tabs of the Interface Module so they are swung inward, top and bottom.

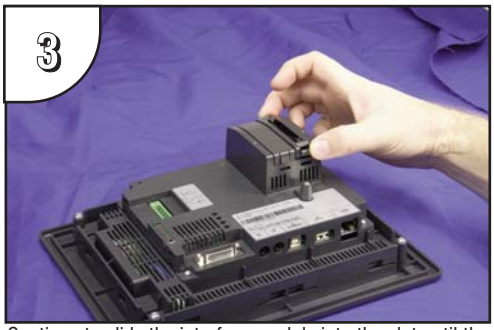

Continue to slide the interface module into the slot until the front of the module is flush with the front of the Expansion Assembly. Press on the front of the Interface Module until the locking tabs snap into place.

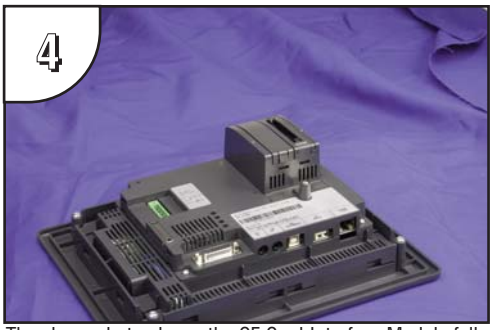

The above photo shows the CF Card Interface Module fully installed. To remove the Interface Module in the future, pry out on the top and bottom locking tabs at the same time and the module will release from the connector. Lift the module from the slot. The Interface Module should only be removed from the slot with input power disconnected.

CompactFlash Memory

EA-CF-CARD is a high speed industrial grade CompactFlash™ memory card for non-volatile storage. Its 85 °C operating temperature makes it perfect for data logging in industrial applications (recommended for ***C-more*** touch panels).

Part No. EA-CF-CARD

Specifications/Features:

- CompactFlash™ Compatibility
- W/E Endurance: 100,000 cycles
- Data transfer rate: 16MB/second
- Operating Temp: -13° to 185° F (-25° to 85° C)
- Operating Humity: 85% max, non-condensing
- Storage Temp: -13° to 194° F (-25° to 90° C)
- Storage Humity: 95% max, non-condensing

CF Slot #1 Location

CF Slot #2 Location

CompactFlash Memory Card Installation

WARNING: Take the necessary steps to prevent damage that may be caused by static electricity discharge. Disconnect input power to the touch panel before proceeding.

CF Card Installed in CF Slot #1:

Preparation: If the touch panel is not already installed into a control cabinet, then in a clean environment, place the panel face down on a lint-free soft surface to prevent scratching the front of the panel.

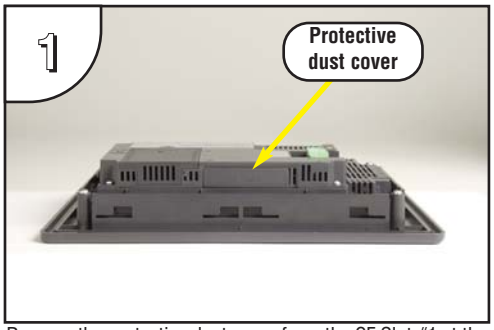

Remove the protective dust cover from the CF Slot #1 at the top of the touch panel by prying up on one edge. Discard the dust cover or store it for future use when a CF card is not being used.

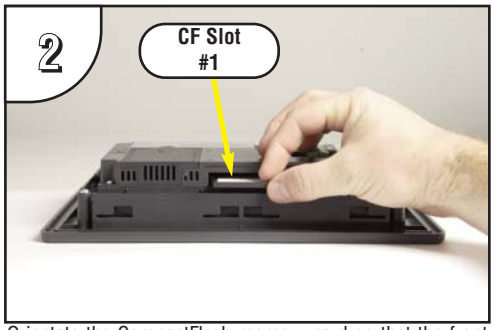

Orientate the CompactFlash memory card so that the front label is facing the back of the panel and the CF card connector faces into the slot. There are guides on each side of the slot that will match the guides on the CF card. The CF card can only be inserted one way.

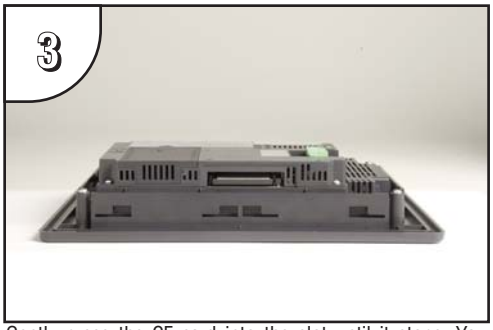

Gently press the CF card into the slot until it stops. You should feel a slight resistance as the CF card connector mates with the slot's connector. The CF card should be flush with the slot's opening. The dust cover can then be re-installed.

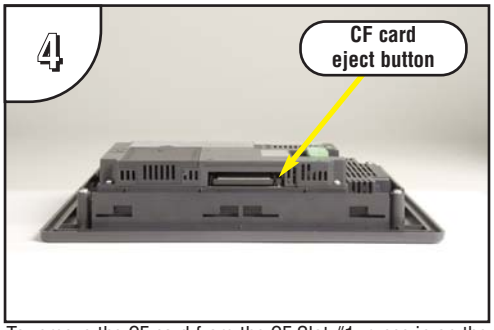

To remove the CF card from the CF Slot #1, press in on the eject button to the right of the CF card. This will cause the CF card to be partially ejected from the slot allowing removal.

WARNING: Do NOT use EZTouch RAM or Flash memory cards with the *C-more* touch panels.

CompactFlash Memory Card Installation (cont'd)

CF Card Installed in CF Slot #2:

Preparation: **Disconnect input power and all other connections, then remove the touch panel from the control cabinet. In a clean environment, place the panel face down on a lint-free soft surface to prevent scratching the front of the panel.**

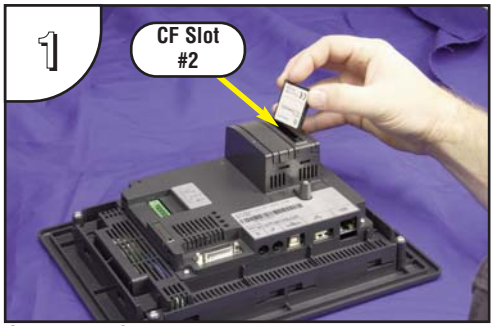

Orientate the CompactFlash memory card so that the front label is facing the power supply connector and the CF card connector faces into the slot. There are guides on each side of the slot that will match the guides on the CF card. The CF card can only be inserted one way.

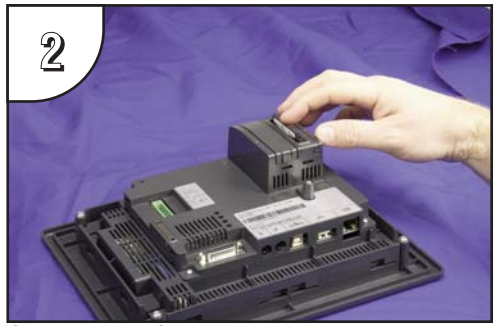

Gently press the CF card into the slot until it stops. You should feel a slight resistance as the CF card connector mates with the slot's connector. The CF card should be flush with the slot's opening.

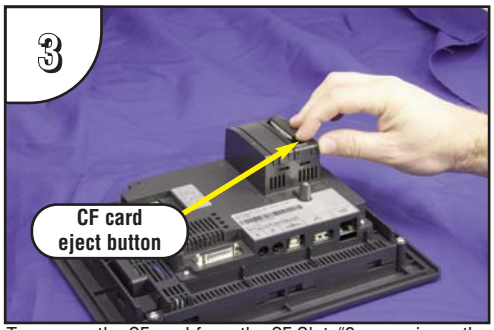

To remove the CF card from the CF Slot #2, press in on the eject button at the bottom of the CF card. This will cause the CF card to be partially ejected from the slot allowing removal.

WARNING: Do NOT use EZTouch RAM or Flash memory cards with the *C-more* touch panels.

6” Adapter Plate

The adapter plate has been designed to simplify the retrofit of a new ***C-more*** 6” touch panel into an existing cabinet cutout for an **EZTouch** 6” non-slim touch panel, such as ***AutomationDirect*** part number EZ-S6C-K, EZ-S6C-F, EZ-S6M-R or EZ-S6M-F. The new ***C-more*** 6” touch panel will directly mount into the existing cutout opening for any **EZTouch** 6” slim touch panel.

Part No. EA-6-ADPTR

6” Adapter Plate Cutout Dimensions

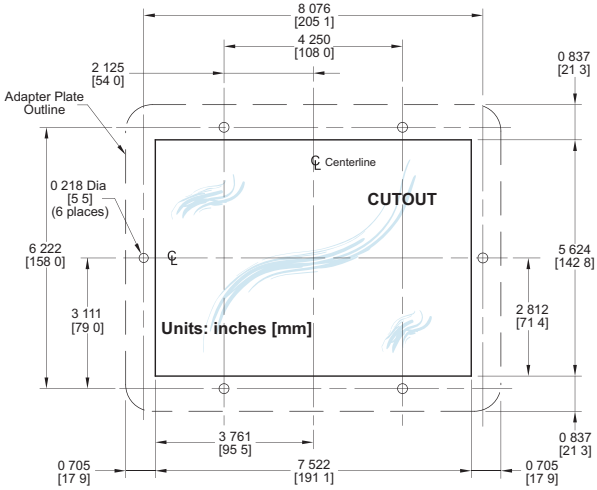

6” Adapter Plate Dimensions

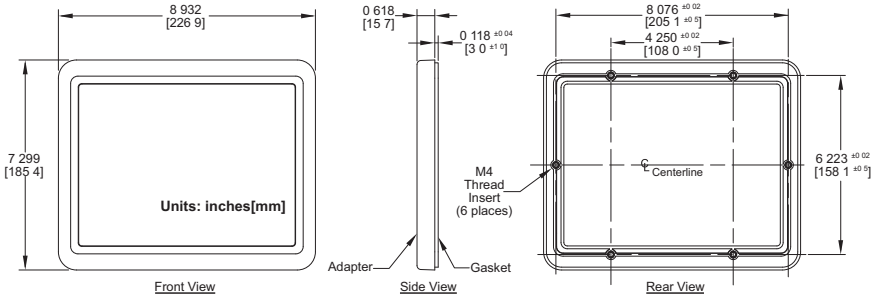

6” Adapter Plate Installation

The adapter plate has been designed to simplify the retrofit of a new ***C-more*** 6” touch panel into an existing cabinet cutout for an **EZTouch** 6” non-slim touch panel, such as our part number EZ-S6C-K, EZ-S6C-F, EZ-S6M-R or EZ-S6M-F. The new ***C-more*** 6” touch panel will directly mount into the existing cutout opening for any **EZTouch** 6” slim touch panel.

Two sets of mounting screws are provided with the adapter plate. Set A contains six M4 metric screws by 8mm in length for a control cabinet thickness range of 0.02-0.118” [0.5-3mm]. Set B contains six M4 metric screws by 10mm in length for a control cabinet thickness range of 0.118-0.197” [3-5mm]. Mounting screw torque: 100 oz-in [0.7 Nm].

The two DIN mounting clips that secure the ***C-more*** 6” touch panel to the adapter plate are provided with the touch panel. The adapter plate has an integral sealing gasket and the touch panel includes a gasket to seal the panel to the adapter.

Use of the adapter plate will maintain the NEMA 4/4X (indoor) rating of the ***C-more*** touch panel.

Dimensions for the cutout with mounting hole locations and an assembly diagram are shown in this chapter.

Preparation: Confirm the existing cutout with the dimensions shown on the previous page when using the adapter plate to replace an existing **EZTouch** 6” non-slim touch panel with a new ***C-more*** 6” touch panel.

WARNING: Mount the adapter plate and touch panel on a vertical surface to allow proper cooling.

6” Adapter Plate Assembly

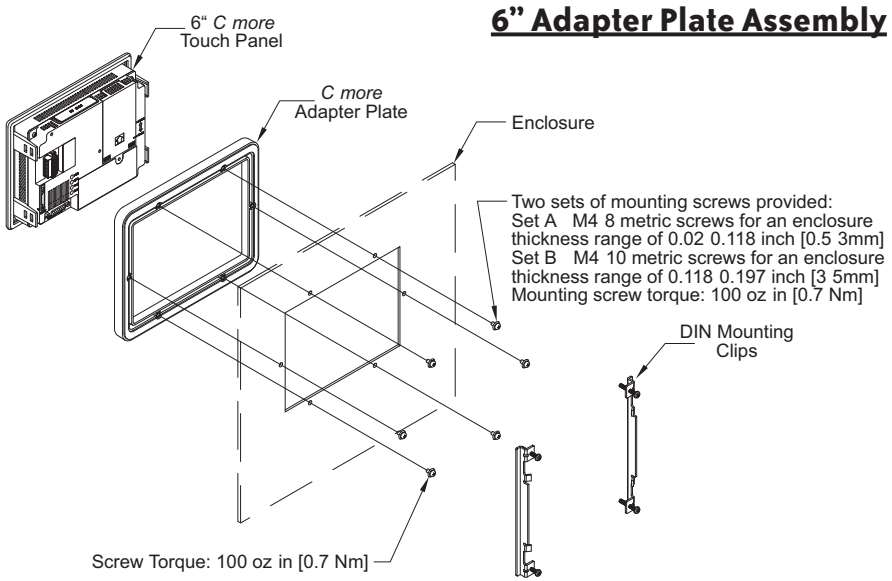

D-SUB 15-pin 90 degree Comm Port Adapter

The EA-ADPTR-4 adapter is plugged into the 15-pin serial port on the rear of the panel to allow a PLC communication cable to be plugged in at a 90 degree angle to reduce panel depth requirements. UL Recognized.

Part No. EA-ADPTR-4

Panel Dimensions with Connector Installed

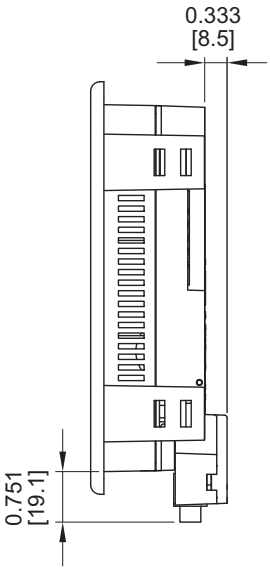

Comm Port Adapter Dimensions

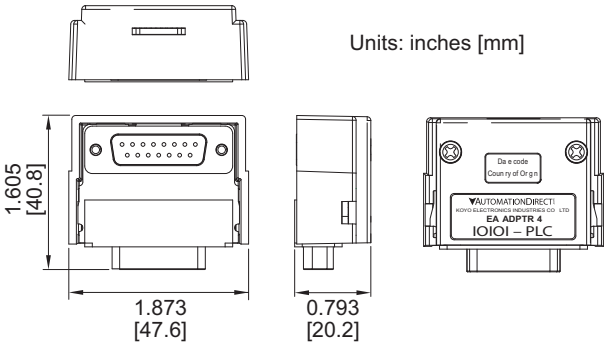

Installation

D-SUB 15-pin to Terminal Block Adapter

The EA-COMCON-3 adapter is plugged into the 15-pin serial port on the rear of the panel to allow wire terminal connections for RS-422/485 PLC communication cable. UL Recognized.

Part No. EA-COMCON-3

3

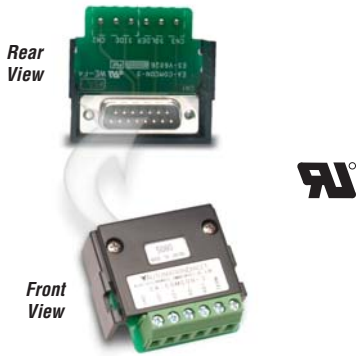

Panel Dimensions with Connector Installed

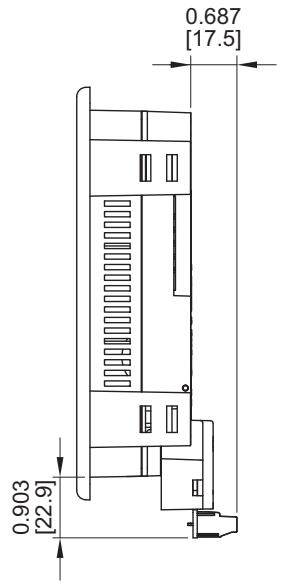

Terminal Block Adapter Dimensions

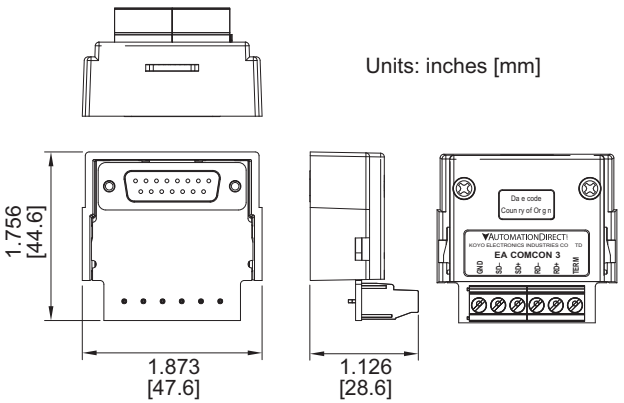

Installation

D-SUB 15-pin to Terminal Block Adapter (cont'd)

Terminal Block Adapter Wiring Diagram

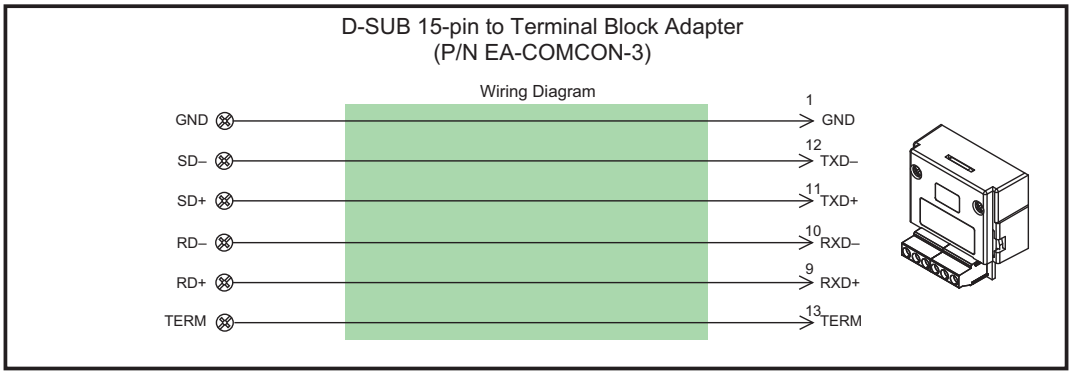

Terminal Block Adapter Terminal Designations

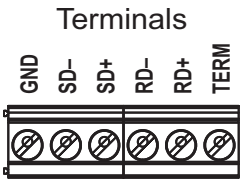

Non-glare Screen Covers

Non Glare 6 Inch Screen Cover, protective overlay used to protect the touch screen while helping to reduce the glare from external light sources. (pk of 3)

Part No. EA-6-COV2, EA-8-COV2, EA-10-COV2, EA-12-COV2 & EA-15-COV2

3

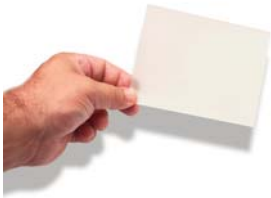

Screen Cover Dimensions

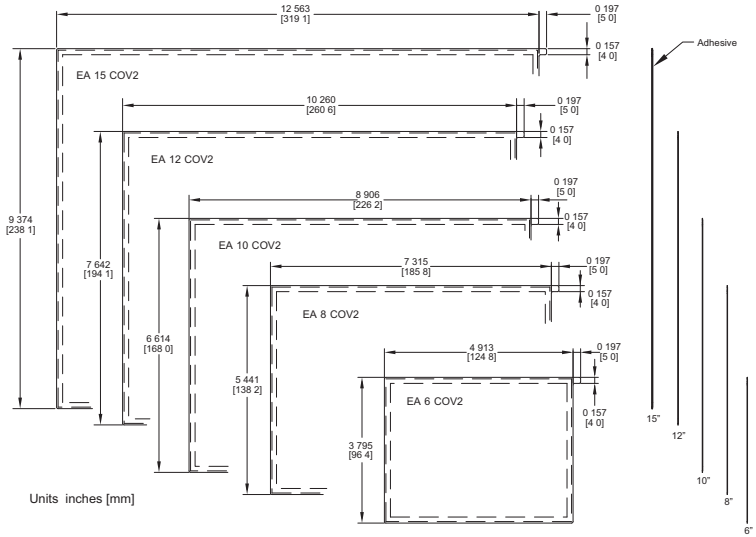

Non-glare Screen Covers (cont'd)

Clear Screen Overlay Installation

Step 1

Check to be sure that the proper size non-glare screen cover is being used on the subject touch panel. Notice that the outer perimeter of the screen cover has an adhesive band. The adhesive band will be located on the outside edge of the touch panel's white frame bordering the touch area when installed.

Step 2

Start in one corner and peel the screen cover from the backing.

Step 3

Align the screen cover over the touch panel's white frame, then start on one side and gently lay the cover over the entire touch area.

Step 4

Smooth out the screen cover and press all around the outside perimeter to secure the cover in place. The screen cover can be removed by lifting up on the small tab and gently pulling the cover away form the touch panel's surface.

Step 5

Remove the protective sheet.

***NOTE**: The protective cover ships with a thin protective sheet on the face of the cover that needs to be carefully removed. If your panel is not clear, the protective sheet may not have been removed.*

USB Pen Drive

The SanDisk Cruzer Micro is an extremely small 2 GB USB Flash Drive (UFD) that connects to a USB port. Users can easily store their logging data, project data, key documents and images on a Cruzer Micro and transfer them to another computer with a USB port.

SDCZ4-2048-A10 sold by AutomationDirect has been tested with ***C-more*** panels.

Part No. SDCZ4-2048-A10

Specifications/Features:

- Dimensions: 7.9mm x 18.95mm x 52.2mm (H x W x L)
- Hi-Speed USB 2.0 certified (backwards compatible with all USB 1.1 ports)
- Compatible with Windows 98SE, ME, 2000, XP, Vista and Mac OS 9.1.x+, OS X v10.1.2+
- Certified Windows XP and Mac OS X

Installation & Wiring

Chapter 4

In This Chapter...

Safety Guidelines 4–2

Introduction 4–3

EA7-S6M-R, S6C-R, T6CL-R, S6M, S6C, T6C, T6CL – Cutout Dimensions 4–4

EA7-T8C – Cutout Dimensions 4–5

EA7-T10C – Cutout Dimensions 4–6

EA7-T12C – Cutout Dimensions 4–7

EA7-T15C – Cutout Dimensions 4–8

6″ Adapter Plate – EA-6-ADPTR 4–9

Mounting Clearances 4–11

Wiring Guidelines 4–12

Agency Approvals 4–12

Marine Use 4–12

Providing Power to the Touch Panel 4–13

DC Wiring Diagram 4–13

AC Wiring Diagram (EA-AC) 4–14

Safety Guidelines

NOTE: Products with CE marks *perform their required functions safely and adhere to relevant standards as specified by CE directives provided they are used according to their intended purpose and that the instructions in this manual are adhered to. The protection provided by the equipment may be impaired if this equipment is used in a manner not specified in this manual. A listing of our international affiliates is available on our Web site: http://www.automationdirect.com*

WARNING: Providing a safe operating environment for personnel and equipment is your responsibility and should be your primary goal during system planning and installation. Automation systems can fail and may result in situations that can cause serious injury to personnel or damage to equipment. Do not rely on the automation system alone to provide a safe operating environment. You should use external electromechanical devices, such as relays or limit switches, that are independent of the PLC application to provide protection for any part of the system that may cause personal injury or damage. Every automation application is different, so there may be special requirements for your particular application. Make sure you follow all national, state, and local government requirements for the proper installation and use of your equipment.

Plan for Safety

The best way to provide a safe operating environment is to make personnel and equipment safety part of the planning process. You should examine *every* aspect of the system to determine which areas are critical to operator or machine safety. If you are not familiar with control system installation practices, or your company does not have established installation guidelines, you should obtain additional information from the following sources.

- NEMA — The National Electrical Manufacturers Association, located in Washington, D.C. publishes many different documents that discuss standards for industrial control systems. You can order these publications directly from NEMA. Some of these include:

  ICS 1, General Standards for Industrial Control and Systems

  ICS 3, Industrial Systems

  ICS 6, Enclosures for Industrial Control Systems

- NEC — The National Electrical Code provides regulations concerning the installation and use of various types of electrical equipment. Copies of the NEC Handbook can often be obtained from your local electrical equipment distributor or your local library.
- Local and State Agencies — many local governments and state governments have additional requirements above and beyond those described in the NEC Handbook. Check with your local Electrical Inspector or Fire Marshall office for information.

Introduction

The installation and wiring of the *C-more*® touch panels requires selecting an appropriate location for the touch panel, laying out the cutout dimensions on the surface of the control cabinet that the panel will be mounted through, securing the touch panel with the provided mounting clips, tightening the screws to the appropriate torque rating to assure the gasket is sealing correctly, and finally connecting the appropriate power source to the touch panel.

WARNING: *C-more* touch panels need to be mounted on a vertical surface to ensure proper cooling of the panel and its components.

***Note**: Each **C-more** touch panel is provided with a cutout template to make marking the proper cutout size on the surface of the control cabinet that the panel will be mounted through a simple task.*

The *C-more* 6" touch panels include two mounting clips. The clips can be viewed as a long metal bracket with two screws in each clip. The 6" panel clips can be fitted to the touch panel at two different depth locations that allow the 6" panel to be mounted through a wide range of enclosure thicknesses. The 8" through 12" touch panels include six mounting clips while the 15" touch panel includes eight. The 8" through 15" panel mounting clips are all the same. They are fitted to the touch panel by inserting two tabs into mating wide slots around th panel and then sliding the clip into a narrower slot to secure it in place. There is one screw on each clip that needs tightening to secure the panel in place.

Any *C-more* touch panel can be mounted directly through the existing cutout of a same size **EZTouch** slim touch panel. There is a simple solution for the need to replace an EZTouch 6" non-slim (rounded bezel) touch panel as explained in the following note.

***NOTE**: The **C-more** 6" touch panels will fit into the existing cutout of any **EZTouch** 6" slim bezel panel. Use the **C-more** 6" Adapter Plate, EA-6-ADPTR, to install **C-more** 6" panels into existing cutouts of **EZTouch** 6" non-slim (rounded bezel) panels. The adapter plate gasket is included.*

This chapter only covers the proper mounting of the touch panel and connecting power. Once power is applied to the touch panel, the user will want to read Chapter 5 on the System Setup Screens in order to set the internal time and date for the panel, check the information menu to make sure the panel is the correct unit for the application and is the latest version, set communication port parameters that may be required, become familiar with the touch panel test features, and check memory options.

The next step will be to select the appropriate PLC protocol and communications cable as described in Chapter 6.

6" Mounting Clips

8-15" Mounting Clip

EA7-S6M-R, S6C-R, T6CL-R, S6M, S6C, T6C, T6CL – Cutout Dimensions

The *C-more* 6" touch panels are mounted into a cutout through the control cabinet and secured with two (2) mounting clips. The mounting clips are provided with the touch panel. There is a set of four (4) rectangular holes (slots) on each side of the touch panel's short dimension that the two tabs on each mounting clip will match. You will need to select either the upper or lower set of holes depending on your control cabinet's material thickness. The table below shows the different thickness ranges. The mounting clips are held in place, and pull the front bezel of the panel tight to the mounting surface, by tightening the screws into the rear of the control cabinet. The screws need to be tightened to the torque rating shown in the table below so that the gasket is compressed to form the proper seal between the panel and cabinet surface.

Note: *Mount the touch panel on a vertical surface to allow convection air flow for proper cooling.*

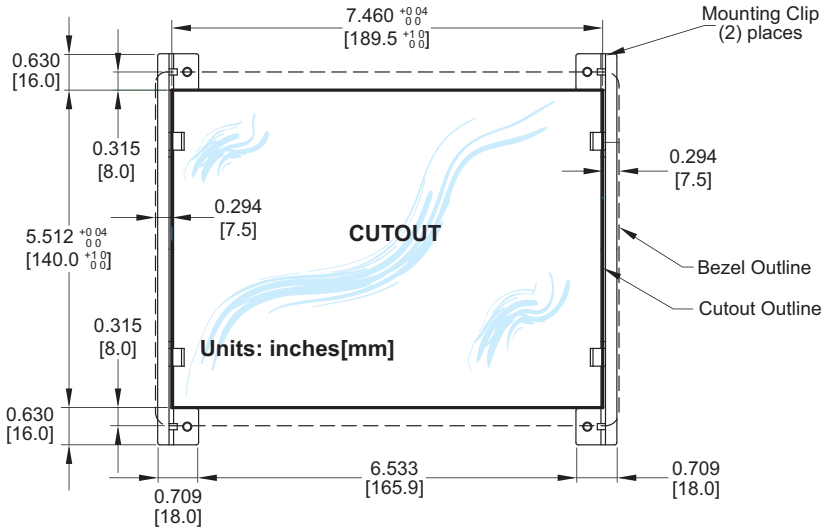

Enclosure Mounting Thickness Ranges and Mounting Clip Screw Torque

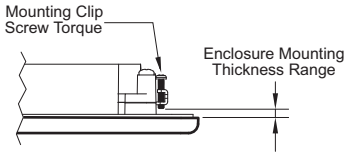

Touch Panel Size	Enclosure Thickness Range	Mounting Clip Screw Torque
6" – lower mounting clip position	0.039 - 0.24 inch [1 – 6 mm]	35 ~ 50 oz-in [0.25 ~ 0.35 Nm]
6" – upper mounting clip position	0.20 - 0.63 inch [5 – 16 mm]	35 ~ 50 oz-in [0.25 ~ 0.35 Nm]

EA7-T8C – Cutout Dimensions

The *C-more* 8" touch panels are mounted into a cutout through the control cabinet and secured with six (6) mounting clips. The mounting clips are provided with the touch panel. The mounting clips will insert into a series of slots around the rear perimeter of the touch panel. Each clip has two tabs that will mate to two slots, using the larger rectangular holes. The mounting clips are held in place by sliding the clip toward the smaller rectangular holes. The screw of each mounting clip needs to be tightened to the torque rating shown in the table below so that the gasket is compressed to form the proper seal between the panel and cabinet surface.

Note: *Mount the touch panel on a vertical surface to allow convection air flow for proper cooling.*

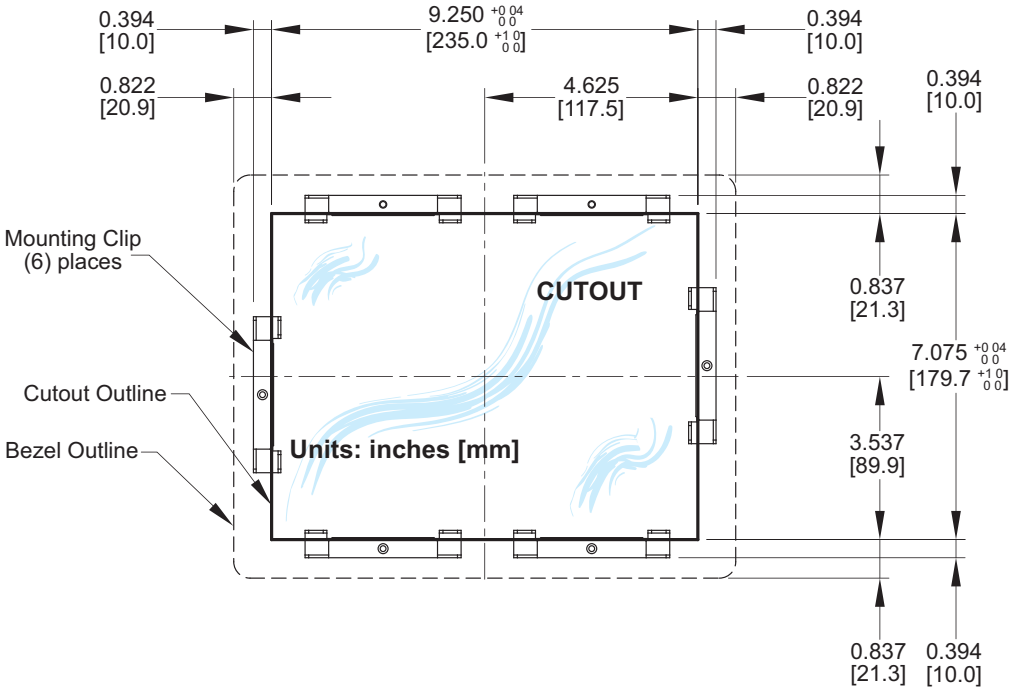

Enclosure Mounting Thickness Ranges and Mounting Clip Screw Torque

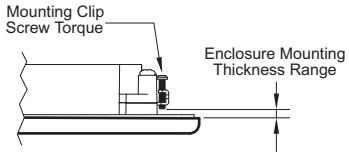

Touch Panel Size	Enclosure Thickness Range	Mounting Clip Screw Torque
8", 10", 12" & 15"	0.039 - 0.20 inch [1 – 5 mm]	42 ~ 57 oz-in [0.3 ~ 0.4 Nm]

EA7-T10C – Cutout Dimensions

The *C-more* 10" touch panels are mounted into a cutout through the control cabinet and secured with six (6) mounting clips. The mounting clips are provided with the touch panel. The mounting clips will insert into a series of slots around the rear perimeter of the touch panel. Each clip has two tabs that will mate to two slots, using the larger rectangular holes. The mounting clips are held in place by sliding the clip toward the smaller rectangular holes. The screw of each mounting clip needs to be tightened to the torque rating shown in the table below so that the gasket is compressed to form the proper seal between the panel and cabinet surface.

Note: *Mount the touch panel on a vertical surface to allow convection air flow for proper cooling.*

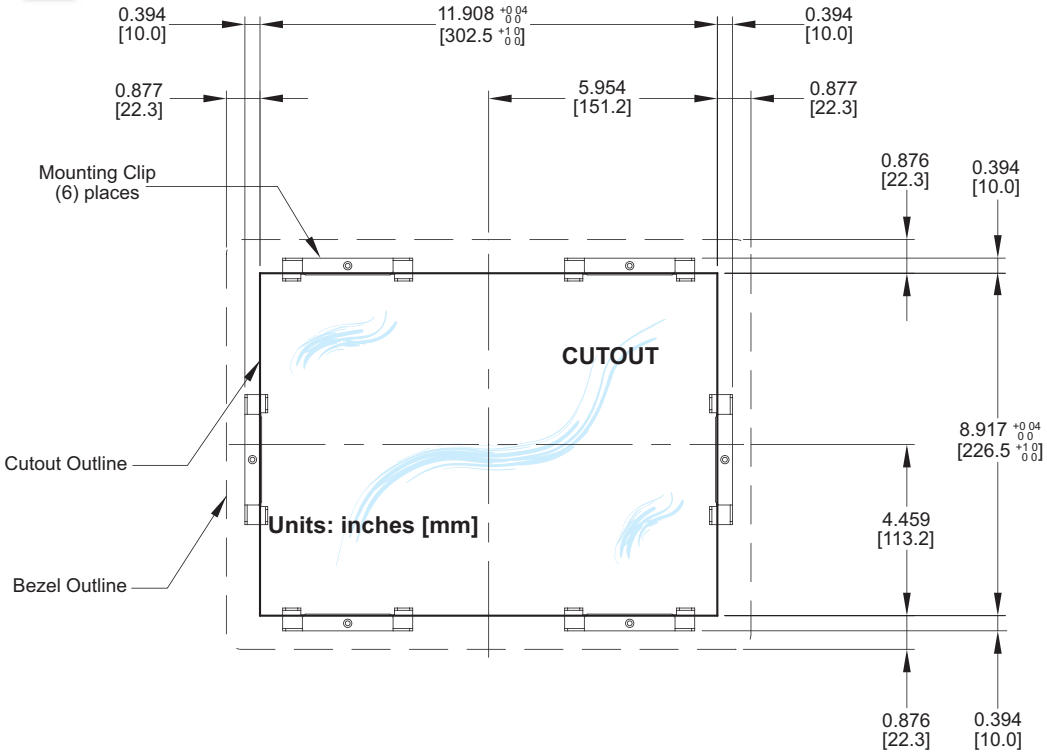

Enclosure Mounting Thickness Ranges and Mounting Clip Screw Torque

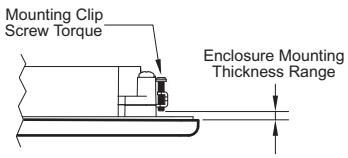

Touch Panel Size	Enclosure Thickness Range	Mounting Clip Screw Torque
8", 10", 12" & 15"	0.039 - 0.20 inch [1 – 5 mm]	42 ~ 57 oz-in [0.3 ~ 0.4 Nm]

EA7-T12C – Cutout Dimensions

The *C-more* 12" touch panels are mounted into a cutout through the control cabinet and secured with six (6) mounting clips. The mounting clips are provided with the touch panel. The mounting clips will insert into a series of slots around the rear perimeter of the touch panel. Each clip has two tabs that will mate to two slots, using the larger rectangular holes. The mounting clips are held in place by sliding the clip toward the smaller rectangular holes. The screw of each mounting clip needs to be tightened to the torque rating shown in the table below so that the gasket is compressed to form the proper seal between the panel and cabinet surface.

Note: *Mount the touch panel on a vertical surface to allow convection air flow for proper cooling.*

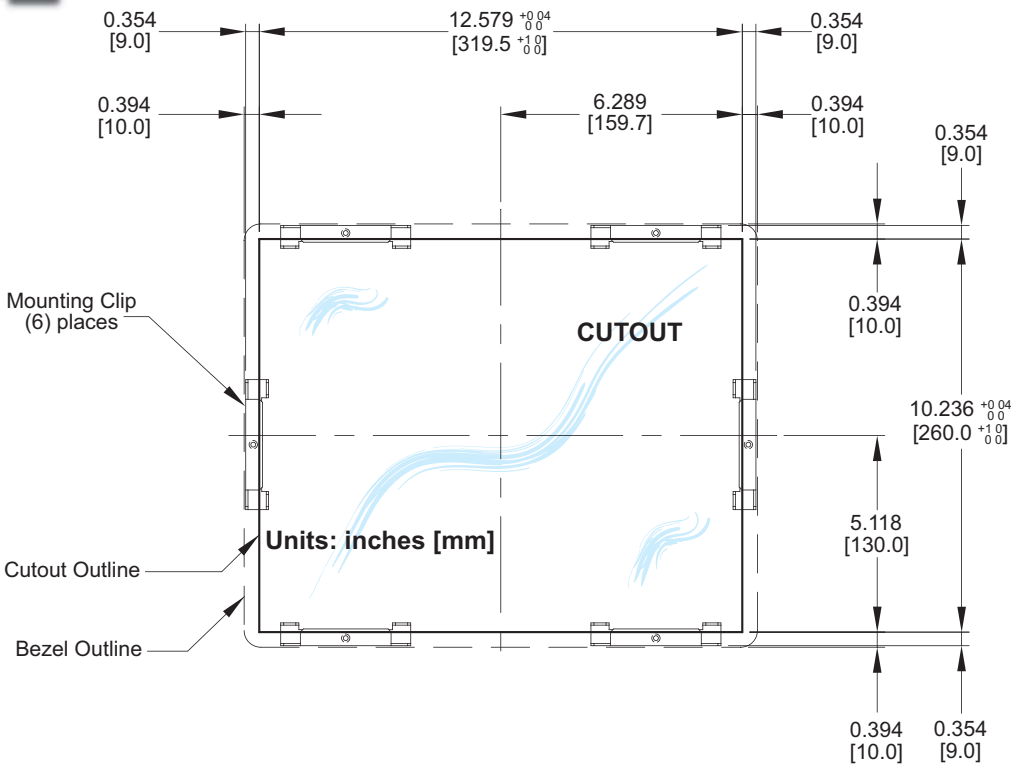

Enclosure Mounting Thickness Ranges and Mounting Clip Screw Torque

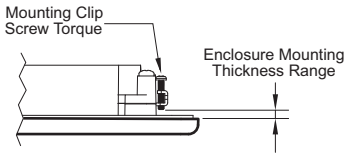

Touch Panel Size	Enclosure Thickness Range	Mounting Clip Screw Torque
8", 10", 12" & 15"	0.039 - 0.20 inch [1 – 5 mm]	42 ~ 57 oz-in [0.3 ~ 0.4 Nm]

EA7-T15C – Cutout Dimensions

The *C-more* 15" touch panels are mounted into a cutout through the control cabinet and secured with eight (8) mounting clips. The mounting clips are provided with the touch panel. The mounting clips will insert into a series of slots around the rear perimeter of the touch panel. Each clip has two tabs that will mate to two slots, using the larger rectangular holes. The mounting clips are held in place by sliding the clip toward the smaller rectangular holes. The screw of each mounting clip needs to be tightened to the torque rating shown in the table below so that the gasket is compressed to form the proper seal between the panel and cabinet surface.

Note: *Mount the touch panel on a vertical surface to allow convection air flow for proper cooling.*

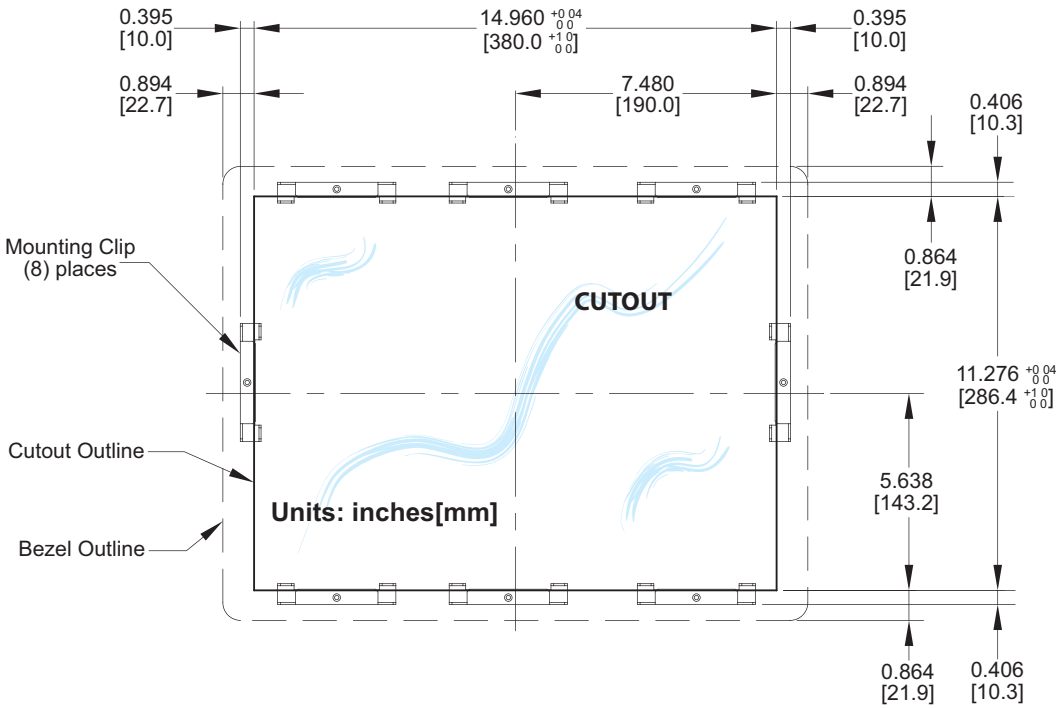

Enclosure Mounting Thickness Ranges and Mounting Clip Screw Torque

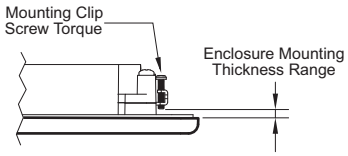

Touch Panel Size	Enclosure Thickness Range	Mounting Clip Screw Torque
8", 10", 12" & 15"	0.039 - 0.20 inch [1 – 5 mm]	42 ~ 57 oz-in [0.3 ~ 0.4 Nm]

6” Adapter Plate

Use the ***C-more*** 6” Adapter Plate, p/n EA-6-ADPTR, to install a ***C-more*** 6” touch panel into the existing cutout of an **EZTouch** 6” non-slim (rounded bezel) touch panel. Gasket and mounting hardware is included.

Part No. EA-6-ADPTR

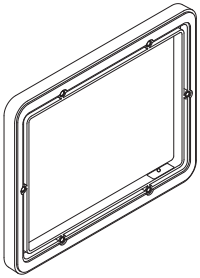

6” Adapter Plate Assembly

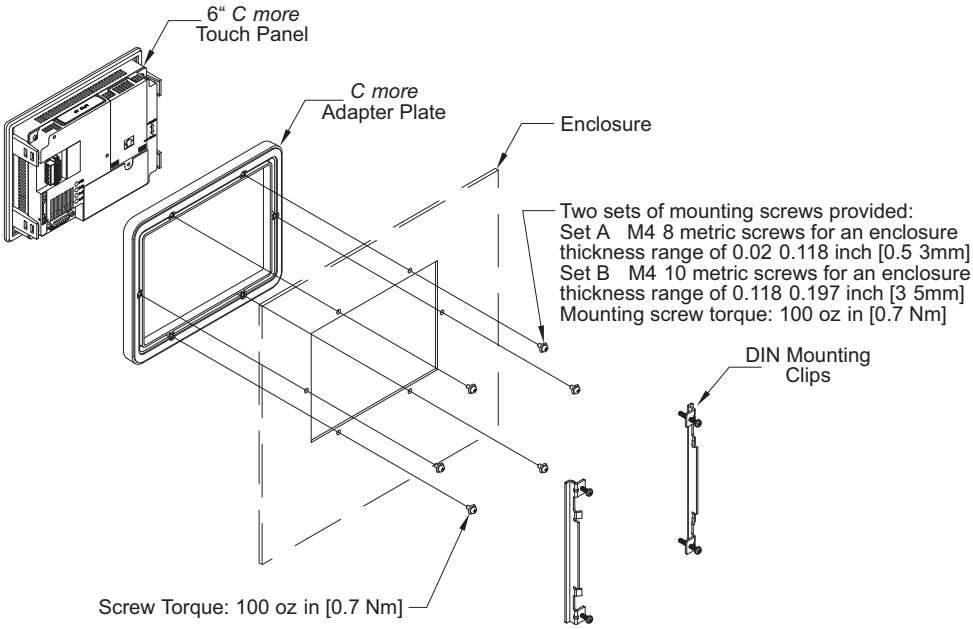

6” Adapter Plate (cont’d)

6” Adapter Plate Dimensions

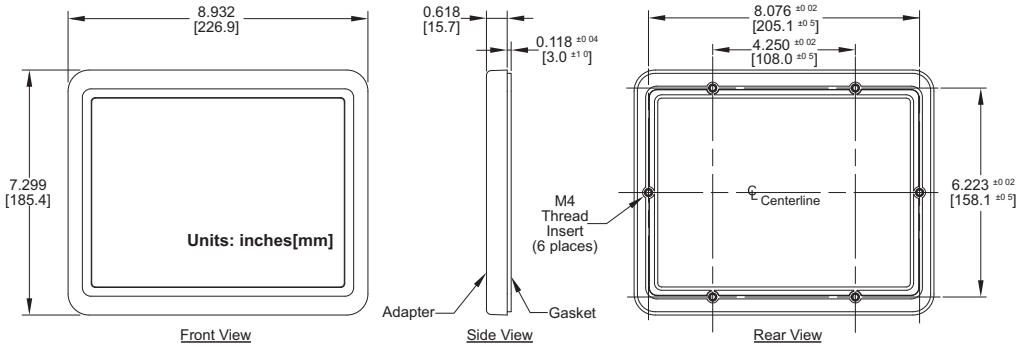

6” Adapter Plate Cutout Dimensions

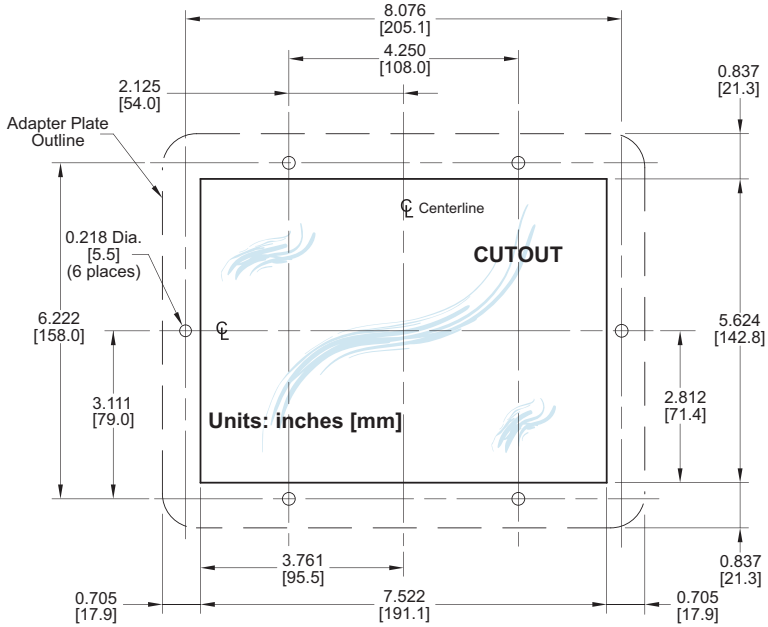

Mounting Clearances

The following drawing shows the mounting clearances for the *C-more* touch panel. There should be a minimum of 4 inches of space between all sides of the panel and the nearest object or obstruction and at least 2 inches between the rear of the panel and the nearest object or obstruction.

Note: *Make sure the touch panel is mounted on a vertical surface to allow convection air flow for proper cooling.*

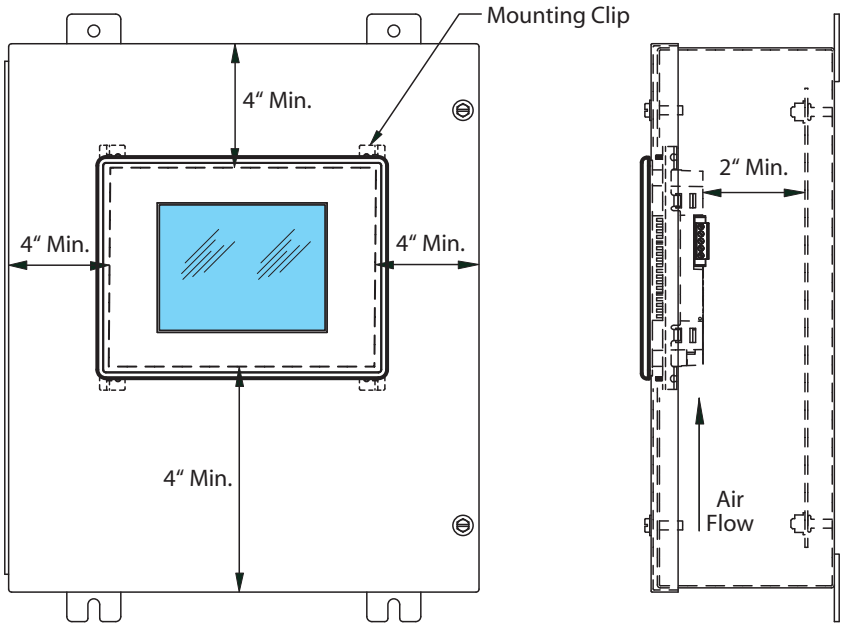

Front View

Side View

Wiring Guidelines

WARNING: To minimize the risk of potential safety problems, you should follow all applicable local and national codes that regulate the installation and operation of your equipment. These codes vary from area to area and it is your responsibility to determine which codes should be followed, and to verify that the equipment, installation, and operation are in compliance with the latest revision of these codes.
Equipment damage or serious injury to personnel can result from the failure to follow all applicable codes and standards. We do not guarantee the products described in this publication are suitable for your particular application, nor do we assume any responsibility for your product design, installation, or operation.
If you have any questions concerning the installation or operation of this equipment, or if you need additional information, please call us at 1-800-633-0405 or 770-844-4200.
This publication is based on information that was available at the time it was printed. At Automationdirect.com® we constantly strive to improve our products and services, so we reserve the right to make changes to the products and/or publications at any time without notice and without obligation. This publication may also discuss features that may not be available in certain revisions of the product.

Agency Approvals

Some applications require agency approvals for particular components. The *C-more* touch panel agency approvals are listed below:

- UL (Underwriters' Laboratories, Inc.)
- CUL (Canadian Underwriters' Laboratories, Inc.)
- CE (European Economic Union)

Marine Use

American Bureau of Shipping (ABS) certification requires flame-retarding insulation as per 4-8-3/5.3.6(a). ABS will accept Navy low smoke cables, cable qualified to NEC "Plenum rated" (fire resistant level 4), or other similar flammability resistant rated cables. Use cable specifications for your system that meet a recognized flame retardant standard (i.e. UL, IEEE, etc.), including evidence of cable test certification (i.e. tests certificate, UL file number, etc.).

NOTE: *Wiring needs to be "low smoke" per the above paragraph. Teflon coated wire is also recommended.*

Wiring Guidelines (cont'd)

Providing Power to the Touch Panel

- **Connect** a **dedicated** 24 VDC (20.4 - 28.8 VDC) switching power supply rated for a minimum of 1.5 A to the DC connector on the rear of the ***C-more*** touch panel. Connect the ground terminal to a proper equipment ground.
- **or** install a ***C-more*** AC/DC Power Adapter (EA-AC) to the rear of the touch panel and connect an AC voltage source of 100-240 VAC, 50/60Hertz, to its AC connector.
- **then** turn on the power source and check the LED status indicators on the rear of the ***C-more*** touch panel for proper operation. See the LED Status Indicator diagram on the next page for reference.

DC Wiring Diagram

DC Wiring

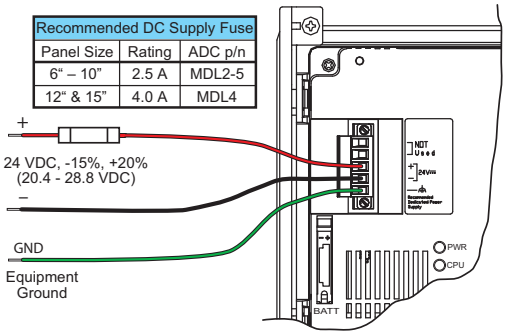

Recommended DC Supply Fuse		
Panel Size	Rating	ADC p/n
6" – 10"	2.5 A	MDL2-5
12" & 15"	4.0 A	MDL4

Recommended DC Power Supply:
***AutomationDirect* Part No. PS24-050D**

Wiring Guidelines (cont'd)

AC Wiring Diagram

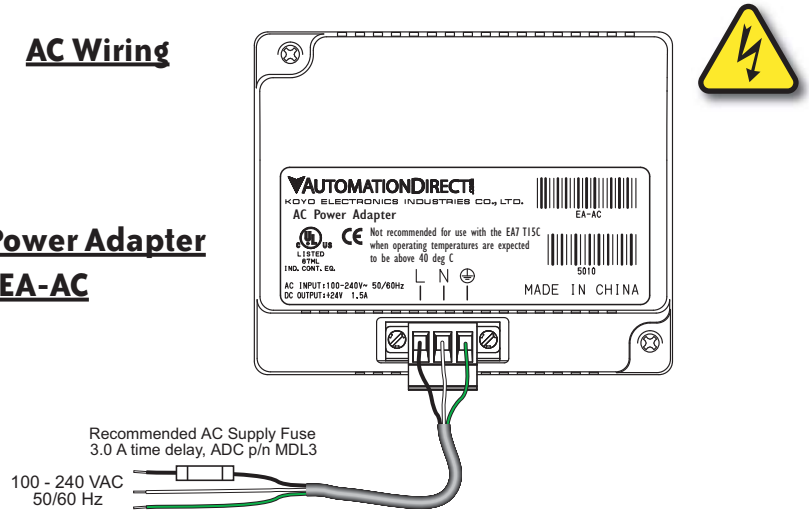

WARNING: The AC/DC Power Adapter is not recommended for use with the EA7-T15C touch panel when operating temperatures are expected to exceed 40 °C [104 °F].

Note: *Power Fault features help protect data being logged to CompactFlash during power failures. The* ***C-more*** *panel must have firmware version 1.21 Build 6.18E or higher for proper operation.*

C-more LED Status Indicators

CPU Status LED (Green, Orange & Red)	
Off	Power Off
Green	Normal CPU Run State
Red	Memory Error
Blinking Red	Operating System not found
Blinking Orange	LCD Backlight Failure
Blinking Green	Power Loss Detection

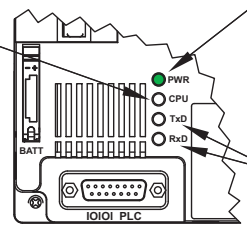

Rear View

Power LED (Green)	
On	Power On
Off	Power Off

Serial TxD/RxD LED (Green)	
On	Comm. is active
Off	No communication

System Setup Screens

Chapter 5

In This Chapter...

Introduction 5–2
Chapter Organization 5–3
Accessing the System Setup Screens (no project loaded) 5–4
Accessing the System Setup Screens (with project loaded) 5–5
System Setup Screens – Enable Password in Software 5–7
System Setup Screens Flowchart 5–13
Main Menu 5–14
Information Menu 5–15
Setting Menu 5–19
Test Menu 5–25
Memory Menu 5–35

Introduction

The *C-more* touch panels include a series of built-in **System Setup Screens** that allow the user to view detailed information about the panel, adjust certain features, configure communications, test various functions of the touch panel, backup & restore system, recipe, log and project memory, clear memory, and reset all values and conditions back to the original factory defaults.

The following is presented to give the user a detailed step by step look at 1.) how to access the System Setup Screens, 2.) what adjustments and features are available, 3.) when and why the feature may need to be adjusted or used, and 4.) how to adjust and/or interrupt the features.

The System Setup Screens from the Main Menu are split into four different categories to make it simple for the user to select the area for viewing information, making adjustments, testing the touch panel or working with the internal and/or external memory options. The four Main Menu selections are:

Information

Here you will find detailed information in regards to the touch panel model, the panel's name, version information for the hardware, boot loader and firmware, clock source, battery status and beeper status. Also available are details on the panel's internal memory and the status of any external memory devices, such as CompactFlash memory and USB pen drives. Communication port details are also available in this area, as well as an error log to help in trouble-shooting the system.

Setting

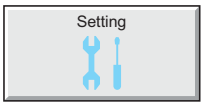

This is the area for 1.) making adjustments to the internal clock, 2.) adjusting the brightness (color panels) and contrast (grayscale panels) of the display, 3.) adjusting (calibrating) the touch panel, 4.) enabling or disabling the internal beeper, and 5.) the IP Address of the touch panel can also be configured from this menu area. Access to the IP Address Setting screen is covered later in this chapter.

Test Menu

From this sub menu, the user can 1.) test the touch panel, 2.) test the display, 3.) test the communication ports, and 4.) test both the internal beeper or the audio line output, if a speaker with an amplifier is connected. A WAV sound file is system provided for the audio line output test.

Memory

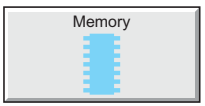

Select the Memory menu item to either backup or restore your project, log data, recipe data and/or system memory. Selections can be made to backup to optional CompactFlash memory or USB pen drive memory. The menu selections also give the user the ability to clear the memory, and there is also a selection to reset all of the touch panel settings back to the original factory defaults.

Chapter Organization

The **System Setup Screens** chapter is organized in the following order:

1.) Accessing the system setup screens with **no project loaded** will take the user directly to the **Main Menu** – page 5-4.

2.) Accessing the system setup screens with a **project loaded** will first take the user to a dialog box **warning** the user that the panel will stop running and waits for an acknowledgement – page 5-5.
a.) If a **password is not enabled**, the user is taken directly to the **Main Menu** after the warning message is acknowledged – page 5-6.
b.) If a **password is enabled**, then the **Enter Security Code** keypad is presented after the warning message is acknowledged – page 5-6.

3.) How to **enable a password** in the ***C-more*** Programming software is explained – page 5-7.

4.) **System Setup Screens** organized as shown in the following flowchart:

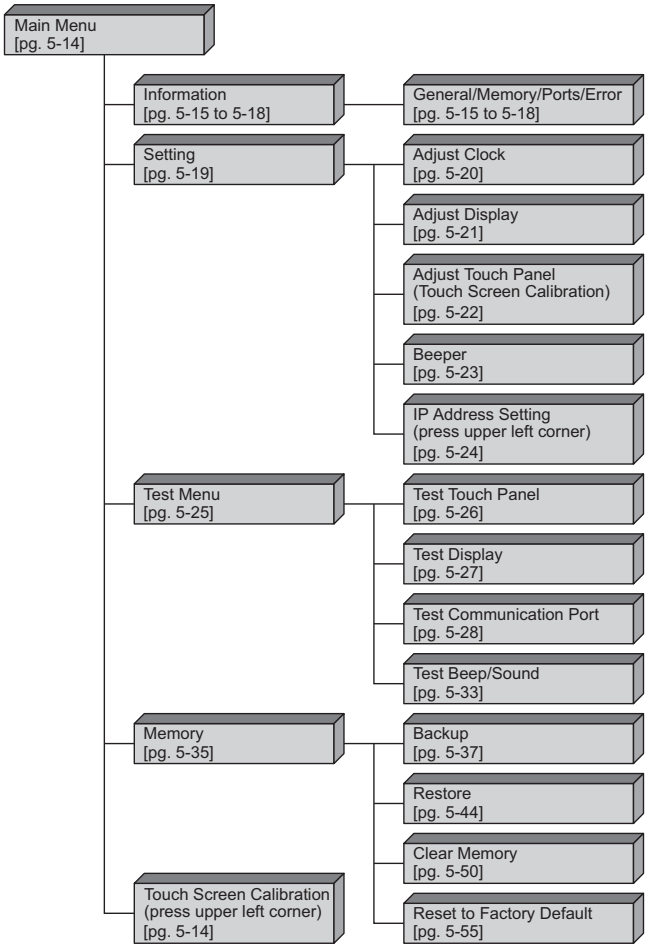

Accessing the System Setup Screens (no project loaded)

To access the **Main Menu** of the touch panel **System Setup Screens** prior to downloading a project, press the extreme upper left corner of the panel display area for 3 seconds as shown below. The **Main Menu** will then be displayed as shown below.

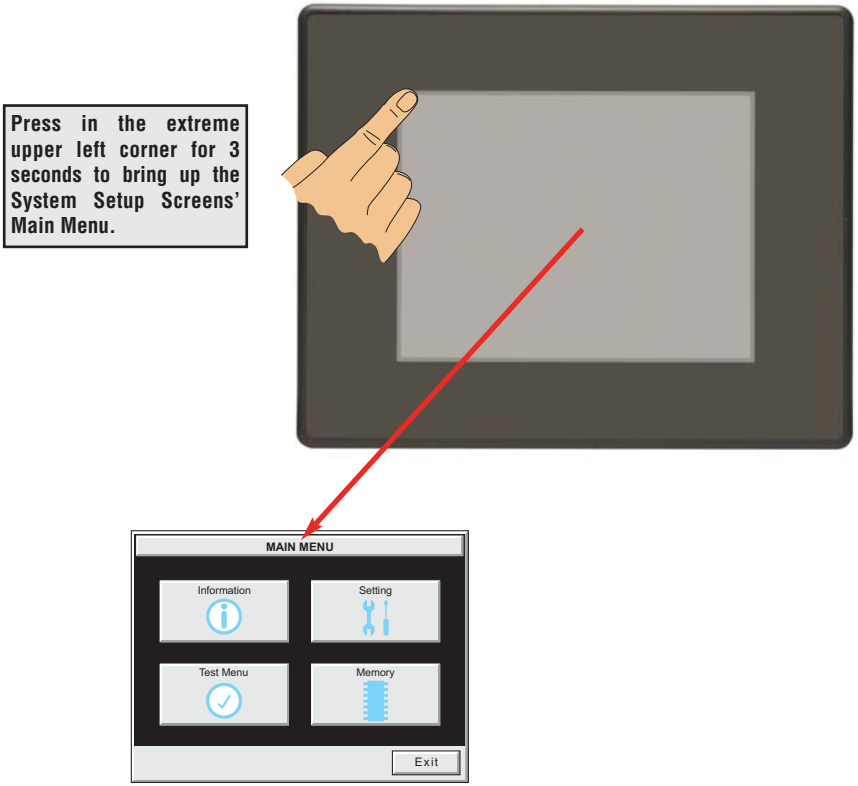

NOTE: *The ability to directly activate the* ***Main Menu*** *of the* ***System Setup Screens*** *by pressing the upper left corner of the touch panel for 3 seconds will only occur when there is no project loaded into the memory of the panel. Refer to the next section on accessing the* ***System Setup Screens*** *with a project loaded for procedure details and recommendations.*

Accessing the System Setup Screens (with project loaded)

To access the **Main Menu** of the touch panel **System Setup Screens** with a project loaded into memory, press the upper left corner of the panel display area for 3 seconds as shown below.

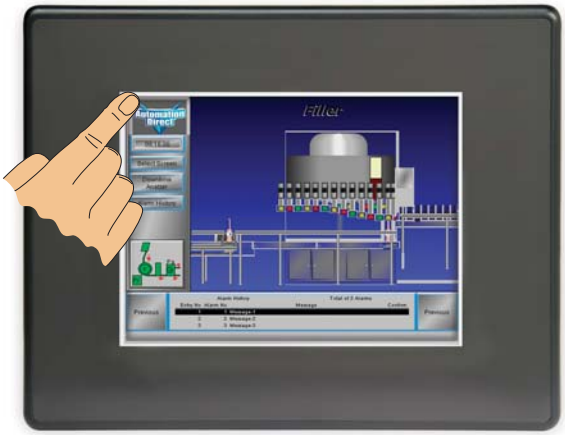

The following **WARNING** dialog box will appear on the the touch screen.

Dialog Box Actions:

- Pressing OK will display the system setup screen. See the WARNING below!
- Pressing Cancel will take you back to the project screen.
- Communications with the PLC is active while the Warning is displayed.
- The dialog box will close if no action is taken for 60 seconds.
- The dialog box will not display if the touch panel does not have a project loaded.
- The dialog box will not display if the System Screen password is enabled.

WARNING: Pressing OK at this point will STOP the PLC driver and therefore all communications between the touch panel and PLC will cease. It is strongly recommended that the password system tag "SYS SYSTEMSCREENPW" be enabled to add a safeguard step in accessing the system setup screens. See the next section for a quick overview for setting the System Tags in the Event Manager Database.

System Setup Screens (no password enabled)

If no password is enabled for the system setup screens, then pressing the **OK** button in the Warning dialog box will bring up the **Main Menu** as shown below. You can then proceed to the other system setup screens.

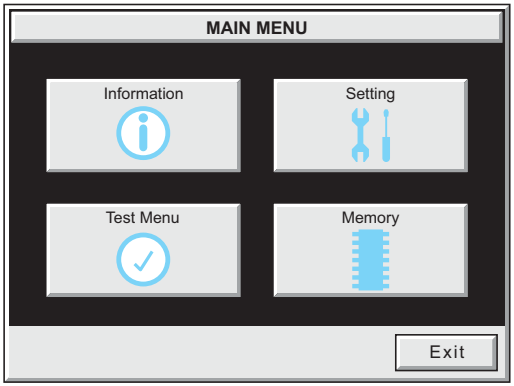

System Setup Screens (password enabled)

NOTE: *If the password system tag* ***SYS SYSTEMSCREENPW*** *is enabled, procedure described on the next page, then the* ***Enter Security Code*** *keypad shown below will be displayed. Entering the correct password code will then bring up the* ***Main Menu*** *system setup screen. If the wrong password code is entered, the keypad clear from its display the value entered and will stay present until the correct value is entered or the* ***Cancel*** *key is pressed.*

System Setup Screens – Enable Password in Software

Under the C-more Programming Software's **Navigation** window, select the **Function** tab, then select the Event Manager's **Database** function to display the **Event Manager Database** shown below:

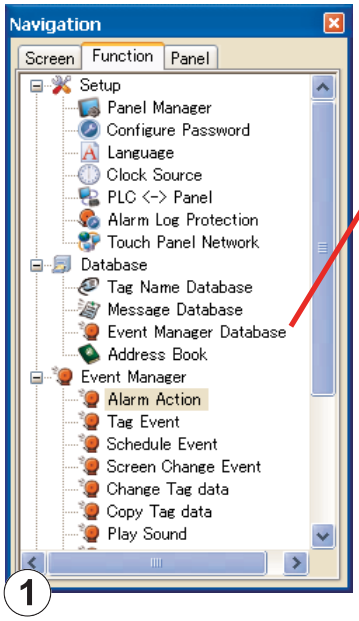

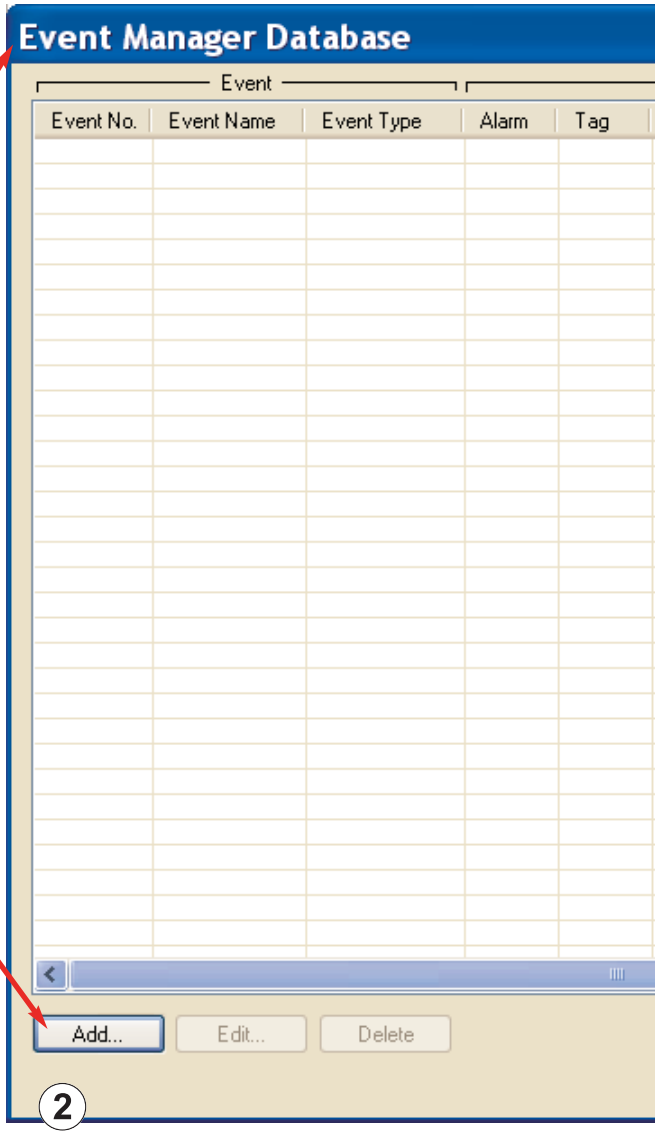

Click on the **Add** button to add an event to the database that will be used to enable the System Screen Password.

System Setup Screens – Enable Password (cont'd)

The **Event Add** dialog box will be displayed as shown next:

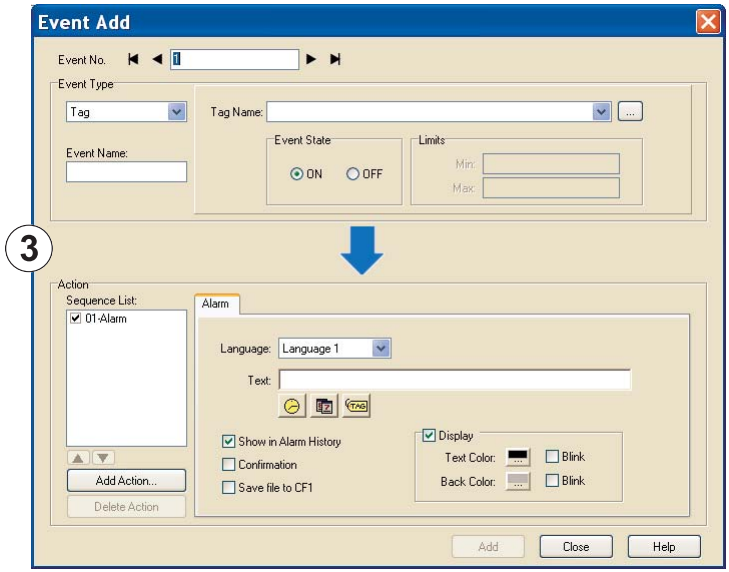

Click on the **Tag Name:** pull down menu and select the internal **System Bit On** (**SYS BIT ON**) tag as shown. This will force the tag event type to be continuously active.

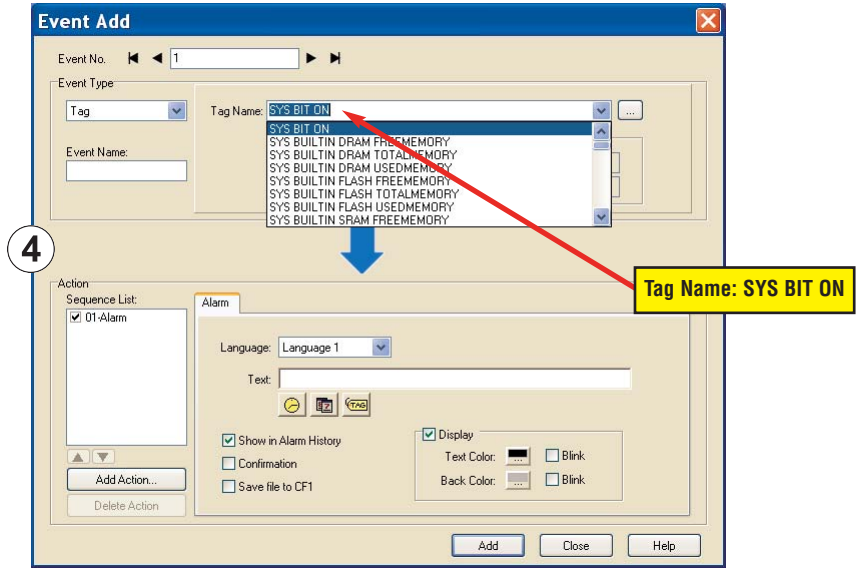

System Setup Screens – Enable Password (cont'd)

Use the **Event Name:** text box to document the event as "System Screen PW" for record keeping This is optional.

In the **Action** box, click once on the displayed **01-Alarm** under the **Sequence List:** so that **01-Alarm** is highlighted. Then click the **Delete Action** button to remove the **01-Alarm**.

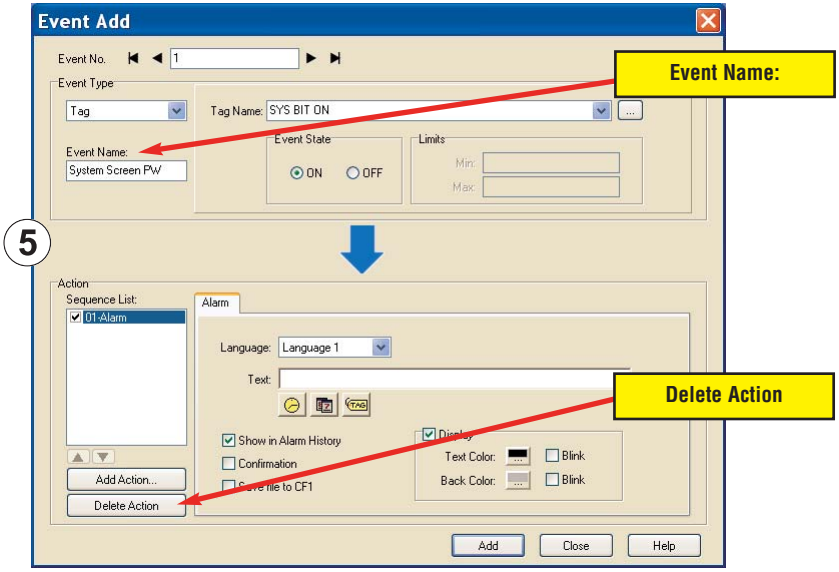

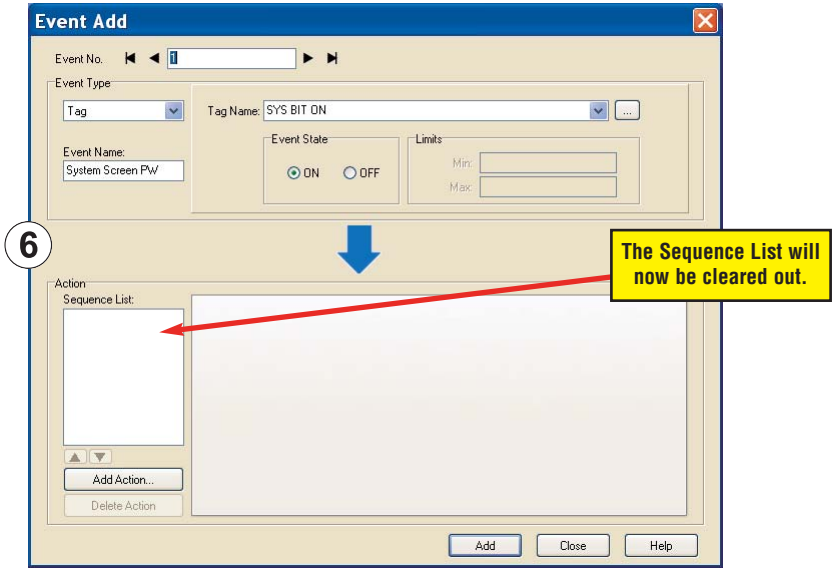

System Setup Screens – Enable Password (cont'd)

In the **Action** box, click on the **Add Action...** button. This will bring up the **Add Action** dialog box as shown below:

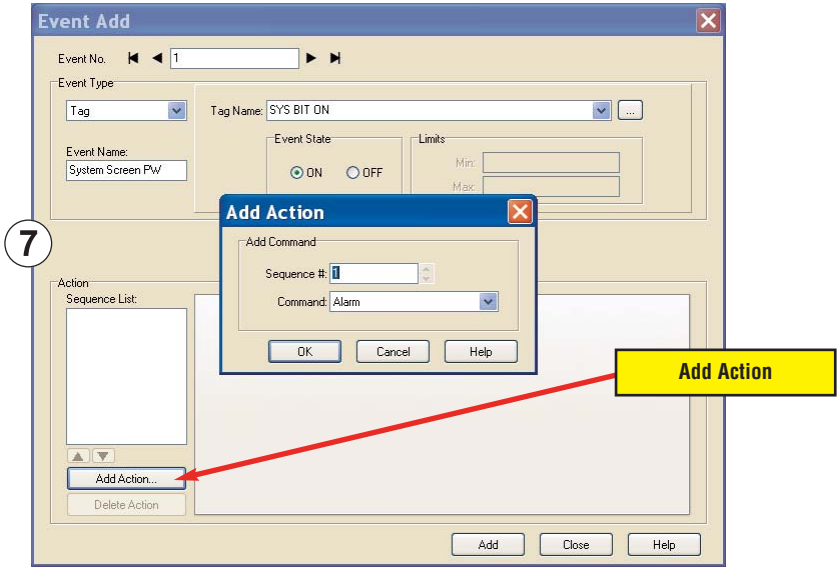

Click on the **Command:** pull down list in the **Add Command** box, select **Tag** from the list, then click **OK**.

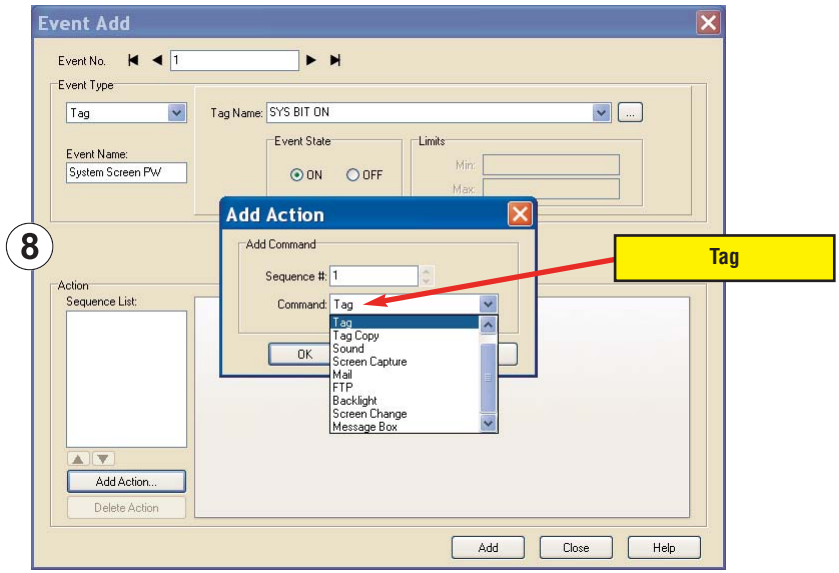

System Setup Screens – Enable Password (cont'd)

A **01-Tag** action item will then be added to the **Sequence List**.

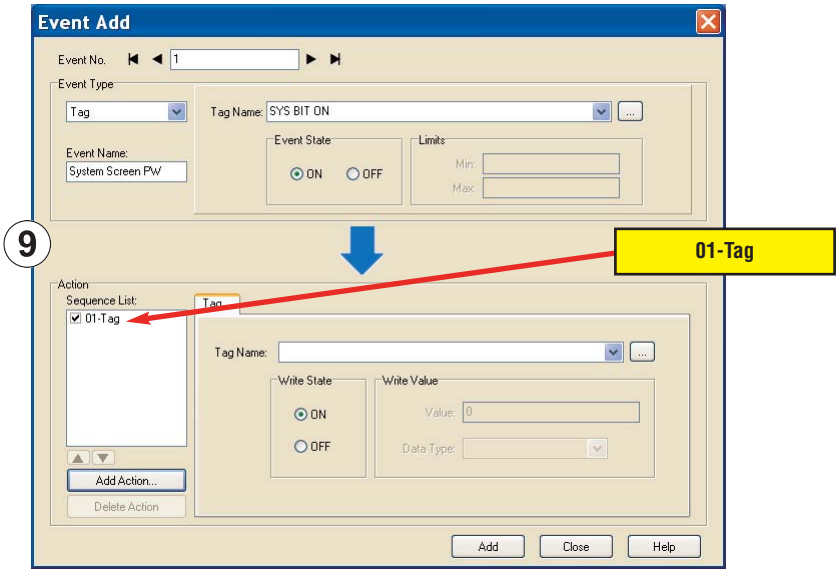

Click on the **Tag Name:** pull down list down arrow in the **Action** box's **Tag** tab, select **SYS SYSTEMSCREENPW** from the list, and click **OK**.

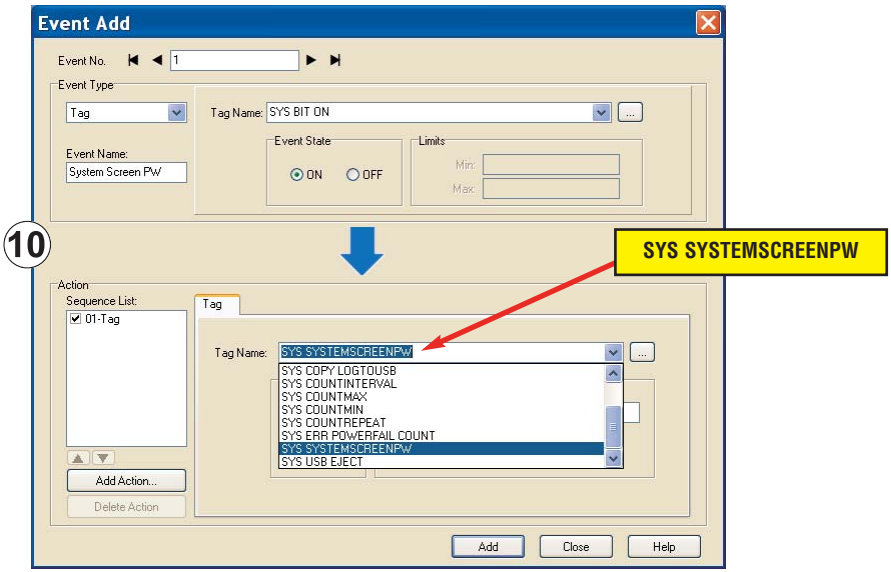

System Setup Screens – Enable Password (cont'd)

Enter a numeric value into the **Value:** box, such as "777". This value becomes the **Password** code to access the **System Setup Screen's Main Menu**.

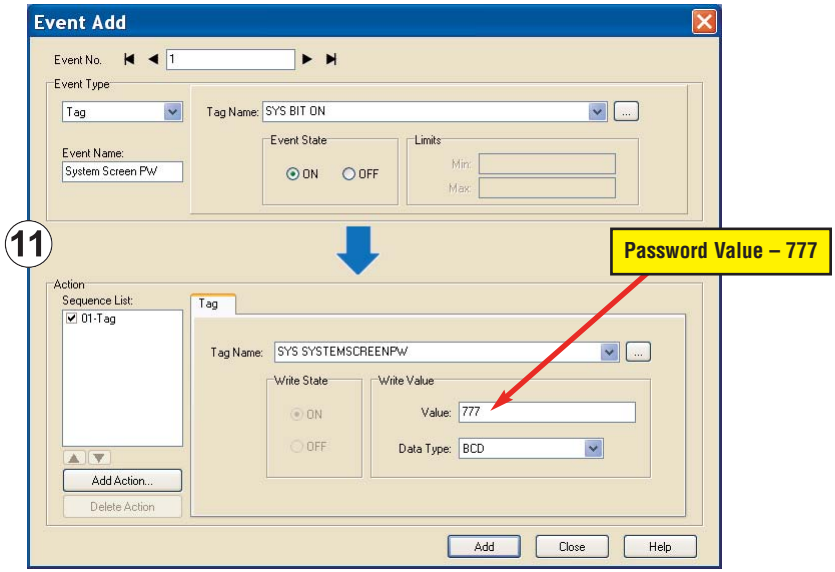

Click the **Add** button in the Event Add dialog box and then the **Close** button to return to the **Event Manager Database**. You now will see that the first event in the database is for the **System Screen Password** and it is enabled.

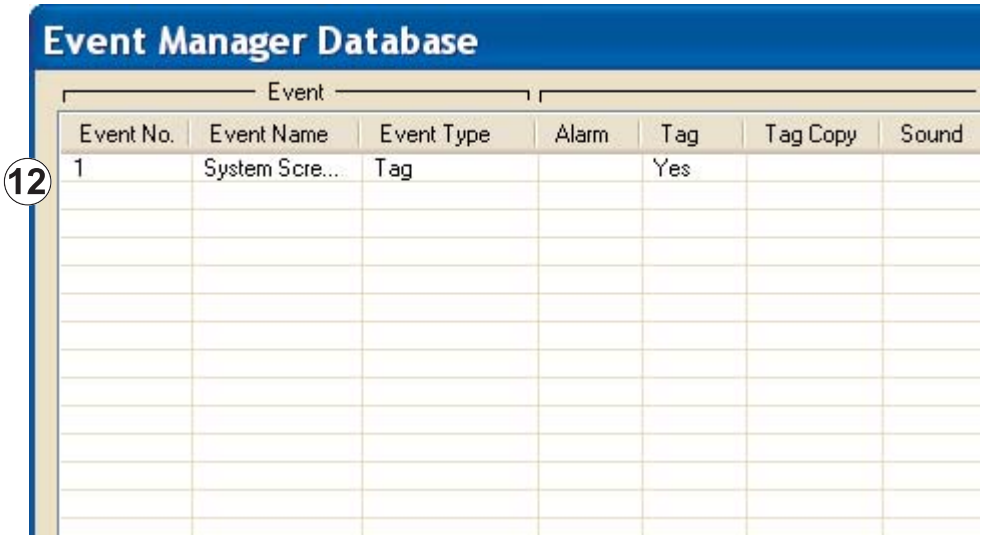

System Setup Screens Flowchart

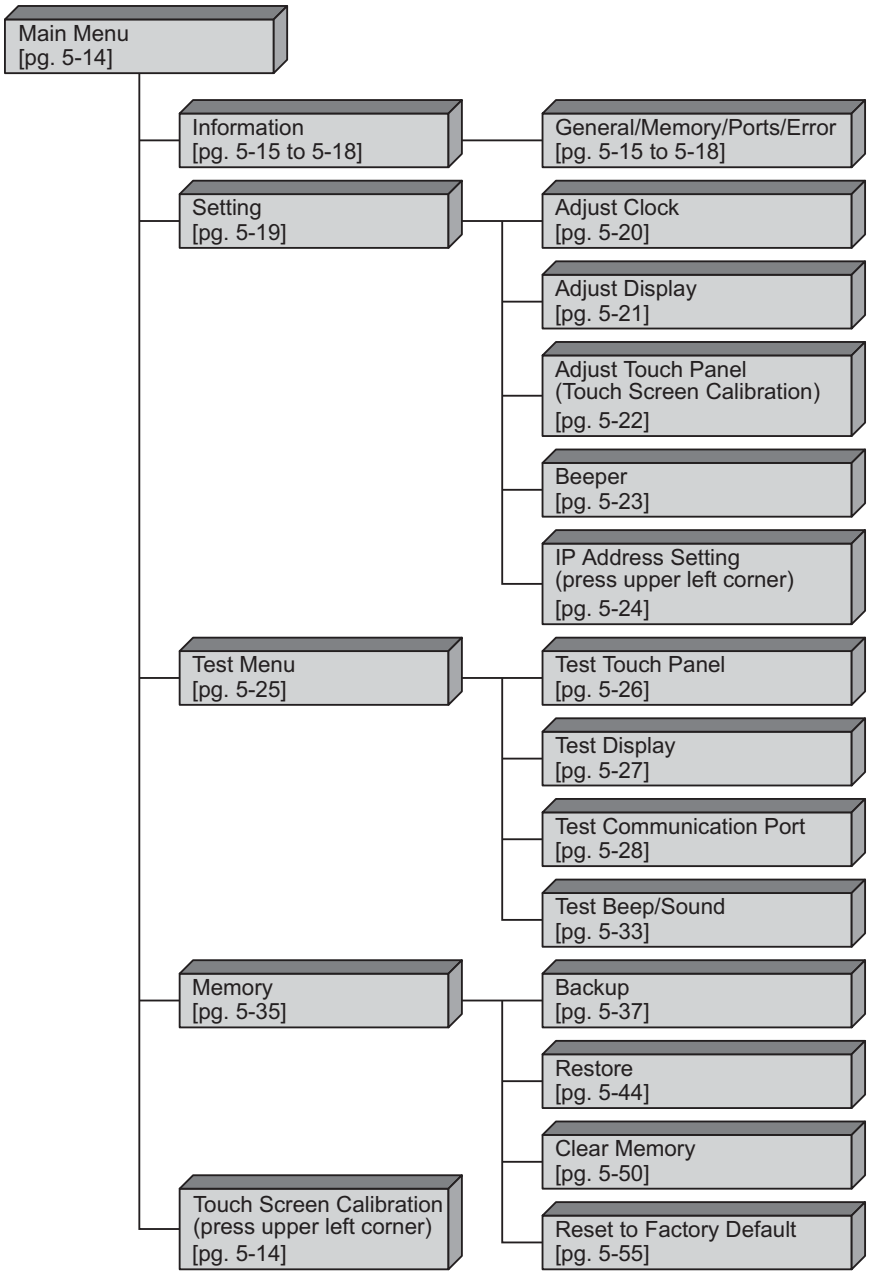

Main Menu

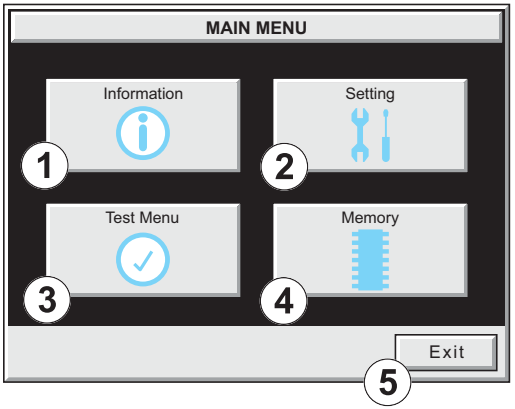

The **Main Menu** system setup screen is the top layer in the menu structure.

The menu is displayed at full screen on the 6 inch touch panel models. It is displayed in the center on the 8, 10, 12, or 15 inch models.

Item No.	Function	Description	Comment
1	**Information**	Press to go to the **Information Menu**.	
2	**Setting**	Press to go to the **Setting Menu**.	
3	**Test Menu**	Press to go to the **Test Menu**.	
4	**Memory**	Press to go to the **Memory Menu**.	
5	**Exit**	Press to return to the user screen.	
6	**Touch Screen Calibration**	While the **Main Menu** system setup screen is being displayed, the extreme upper left corner of the touch panel can be pressed for 3 seconds to access the **Touch Screen Calibration** display.	This feature is only used if the touch panel data becomes corrupted and touching the **Main Menu** buttons does not work. It allows a shortcut to the touch panel calibration screen.

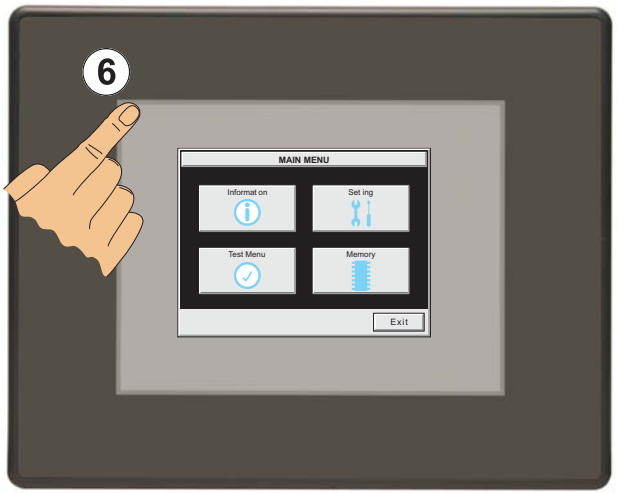

Information Menu – General tab

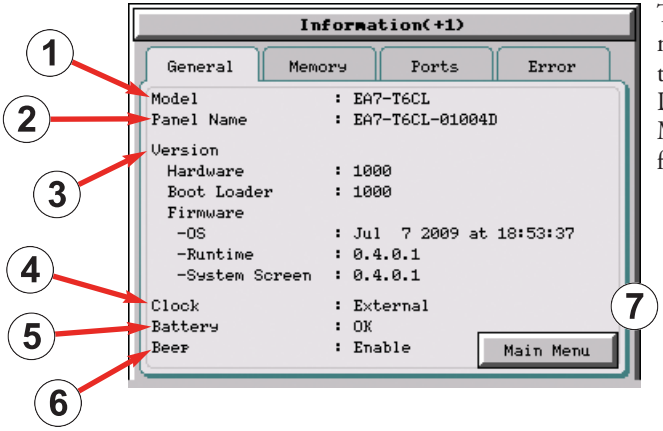

The **General** tab under the Information menu provides detailed information of the *C-more* Touch Panels model, Panel Default Name based on Model type and MAC address, hardware, boot loader and firmware versions, etc.

5

Item No.	Function	Description	Comments
1	**Model**	EA7-S6M-R, EA7-T6CL-R, EA7-S6C-R, EA7-S6M, EA7-T6CL, EA7-S6C, EA7-T6C EA7-T8C, EA7-T10C, EA7-T12C, EA7-T15C	
2	**Panel Default Name**	[Model Name]-01XXXX "01 XXXX" is the lower 3 bytes of the Mac Address MAX: 15 characters (15 bytes)	e.g. EA7-S6M-01004D This is the default name. The name can be changed in the ***C-more*** Programming Software.
3	**Version**	1.)Hardware: XXXX 2.)Boot loader: XXXX 3.)Firmware a) OS:Timestamp of NK.BIN file b) Runtime: X.X.X.X (Version of Runtime.EXE file) c) System Screen: X.X.X.X (Version of Panel.exe file)	Files reside in the ***C-more*** touch panel's memory.
4	**Clock**	Internal/External clock selection.	Configured in the ***C-more*** Programming Software.
5	**Battery**	Battery status, either **OK** or **Battery Low**.	
6	**Beep**	Enable/Disable the internal beeper.	Configurable in the **Setting Menu – Beeper** shown on page 5-23 or in the ***C-more*** Programming Software.
7	**Main Menu**	Press to return to the **Main Menu** screen.	**Main Menu** shown on page 5-14.

Information Menu – Memory tab

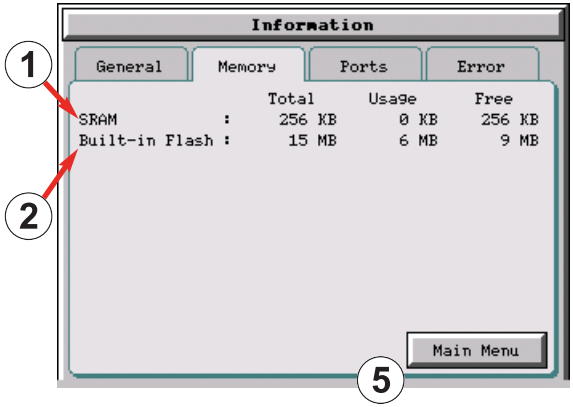

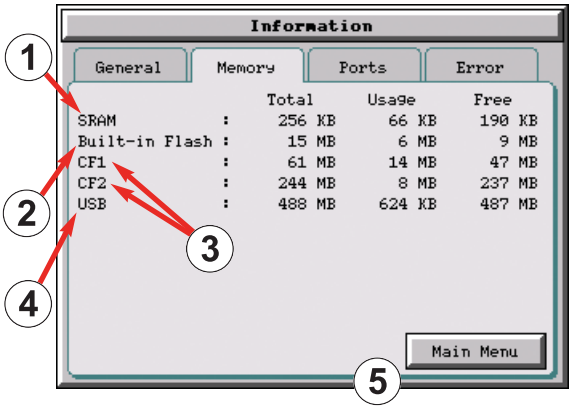

C-more Memory Organization

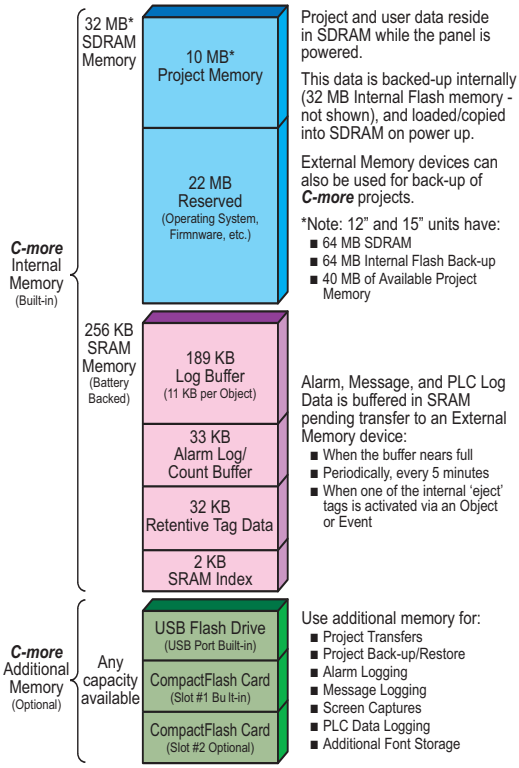

Item	Function	Description	Comment
1	**SRAM System Memory**	1.) Total: 2.) Usage: 3.) Free:	Size of unit displayed: 1.) KB When size is 1 to 999 bytes. It will be shown as 1KB. 2.) KB or MB 3.) MB or GB
2	**Built-in Flash Memory**	1.) Total: 2.) Usage: 3.) Free:	
3	**Expansion Memory 1.) CF1: 2.) CF2: (only visible when present)**	1.) Total: 2.) Usage: 3.) Free: Note: N/A - not available on base featured models (–R)	
4	**Expansion Memory 3.) USB: (only visible when present)**	1.) Total: 2.) Usage: 3.) Free:	
5	**Main Menu**	Press to return to the **Main Menu** screen.	

Information Menu – Ports tab

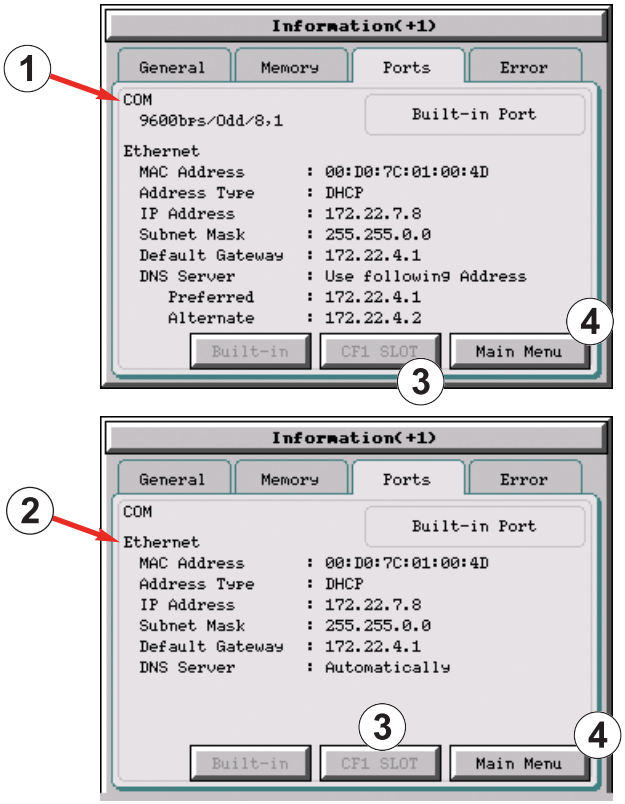

Item No.	Function	Description	Comment
1	**COM (Built-in Ports)**	PLC Serial Communications Port Settings: baud rate/party/data bit, stop bit	Configured in the ***C-more*** Programming Software.
2	**Ethernet (Built-in Ports)**	Ethernet Settings: MAC Address: 00 D0 7C 01 XX XX Address Type: DHCP/Static IP Address: Subnet Mask: Default Gateway: DNS: 1.) Automatically 2.) Use Designated Address Note: N/A - not available on base featured models (–R)	Configurable in the **Setting Menu – IP Address Setting** shown on page 5-24 or in the ***C-more*** Programming Software.
3	**Ethernet (CF1 Slot)**	Future	Future
4	**Main Menu**	Press to return to the **Main Menu** screen.	

Information Menu – Error tab

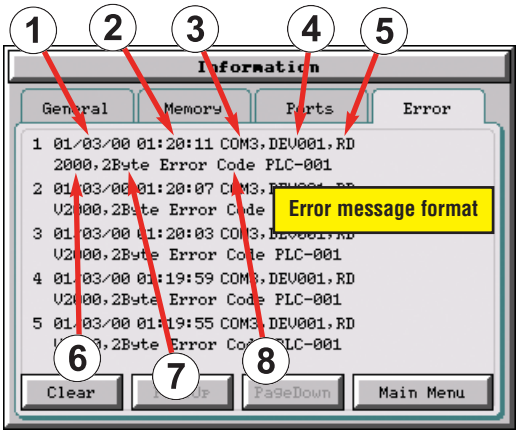

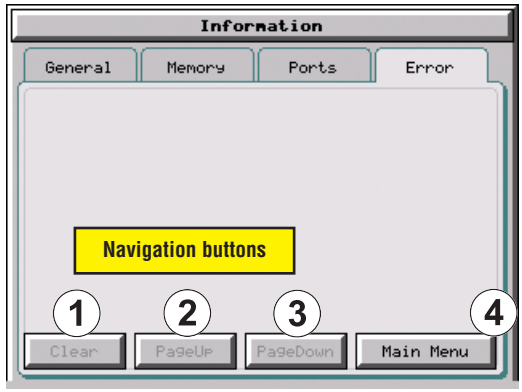

Error message format:

Item No.	Function	Description	Comment
Order of error message functions: **Error Number, Date, Time, Error Port, Device Name, Error Type, PLC Device, Access Bytes, Error Message**			
1	**Date**	Format: MM/DD/YY	Date error occurred.
2	**Time**	Format: HH/MM/SS	Time error occurred.
3	**Error Port**	PLC Serial Communications Port: Ethernet:	
4	**Device Name**	The assigned device name in the programming software.	Configurable in the ***C-more*** Programming Software Panel Manager
5	**Error Type**	RD: Read WT: Write	
6	**PLC Address**	The assigned address of the PLC that caused the error.	
7	**Access Bytes**	The number of access bytes.	
8	**Error Message**	The error message is the same as the message displayed in the upper left of the ***C-more*** touch panel's display.	A list of Error Massages is shown in Appendix A

Error message navigation buttons:

Item No.	Function	Description	Comment
1	**Clear**	Press to clear all error messages. This button is grayed out when there are no error messages to display.	
2	**Page Down**	Press to go to to the next page. This button is grayed out when there is no error messages on the next page.	
3	**Page Up**	Press to go to the previous page. This button is grayed out when there is no error messages on the previous page.	
4	**Main Menu**	Press to return to the **Main Menu** screen.	

Setting Menu

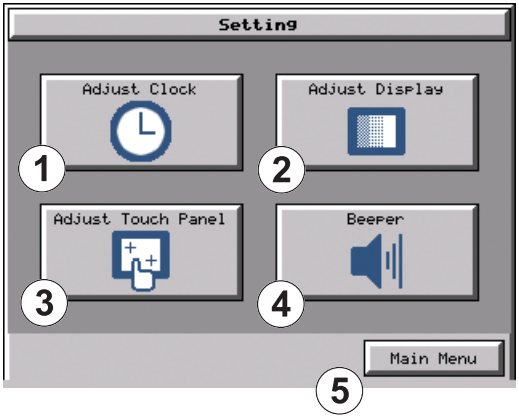

The **Setting Menu** is used to adjust the time & date, adjust the contrast or brightness of the display depending on which model is being used, adjust (calibrate) the touch screen, and enable or disable the internal beeper.

Item No.	Function	Description	Comments
1	**Adjust Clock**	Press to go to the **Adjust Clock** screen.	
2	**Adjust Display**	Press to go to the **Adjust Display** screen.	
3	**Adjust Touch Panel**	Press to go to the **Adjust Touch Panel** screen.	
4	**Beeper**	Press to go to the **Adjust Beeper** screen.	
5	**Main Menu**	Press to return to the **Main Menu** screen.	
6	**IP Address setting**	While the **Setting Menu** system setup screen is being displayed, the extreme upper left corner of the touch panel can be pressed for 3 seconds to access the IP Address setting screen.	The IP Address setting screen is only accessible form the **Setting Menu** screen as described. There is no direct button to call it from any of the setup screens. The IP Address can also be assigned in the ***C-more*** Programming Software.

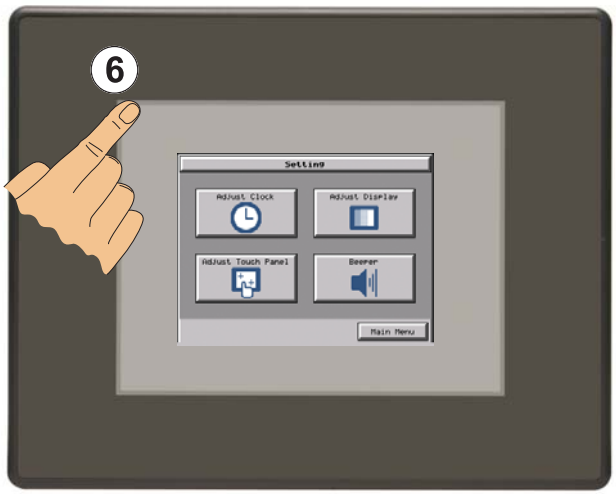

Setting – Adjust Clock

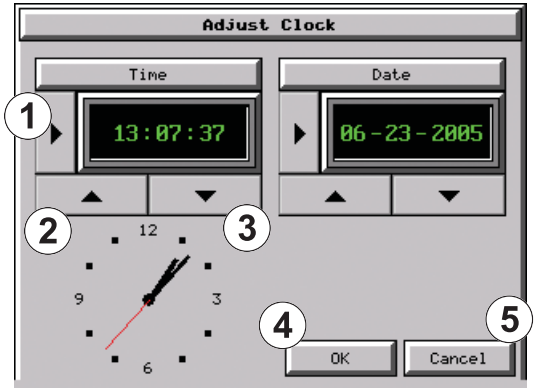

Color Touch Panel

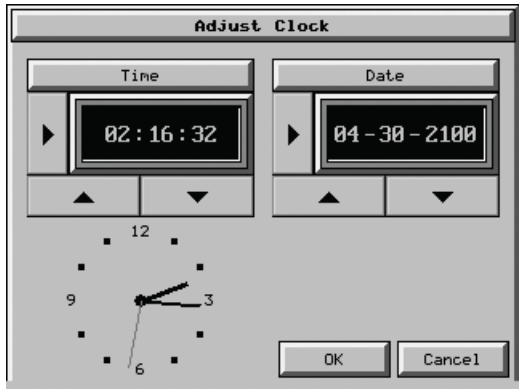

Grayscale Touch Panel

Item No.	Function	Description	Comments
1	**Select** ▶	**Time:** Each press of the **Select** button will cycle thru the following settings. 1.) No Selection to Hours 2.) Hours to Minutes 3.) Minutes to Seconds 4.) Seconds back to Hours **Date:** Each press of the **Select** button will cycle thru the following settings. 1.) Month to Day 2.) Day to Year 3.) Year back to Month	
2	**Up** ▲	Press to increment the value by "1" with each press.	
3	**Down** ▼	Press to decrement the value by "1" with each press.	
4	**OK**	Press to accept the changes.	
5	**Cancel**	Press to return to the **Setting Menu** screen without accepting the changes.	

NOTE: *The function buttons used to adjust the clock settings on the panel's setup screen are* ***disabled*** *if an* ***External*** *clock source is selected in the* ***C-more*** *programming software. The choice of an internal or external clock source is available by selecting* ***Clock Source*** *in the* ***C-more*** *programming software under the* ***Main Menu*** *drop down function* ***Setup.***

NOTE: *The panel's clock can also be adjusted from the* ***C-more*** *programming software. The* ***Adjust Clock*** *function can be accessed in the software by selecting* ***Adjust Clock*** *under the* ***Main Menu*** *drop down function* ***Panel*** *or selecting* ***Adjust Clock*** *under the* ***Panel*** *tab in the software's* ***Navigation*** *window.*

Setting – Adjust Display

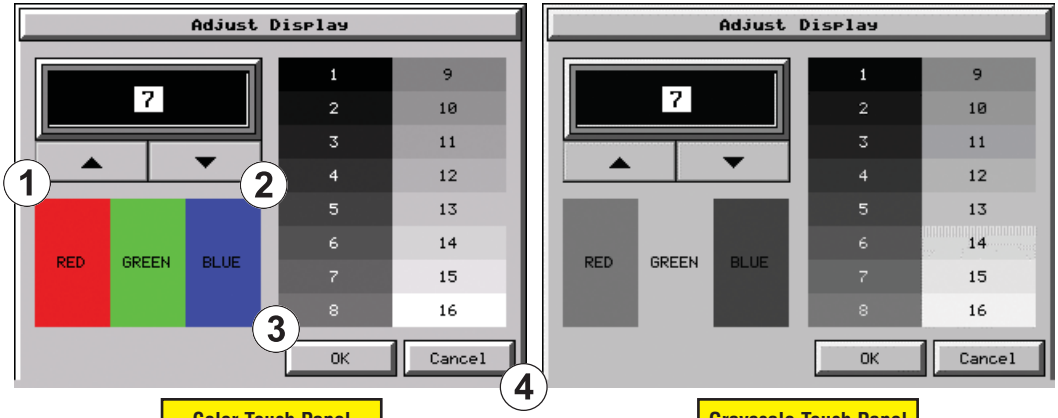

Color Touch Panel

Grayscale Touch Panel

Item No.	Function	Description	Comments
The STN type display models can have the contrast adjusted. The TFT type display models can have the brightness adjusted. See the table below.			
1	Up ▲	Press to increment the value by "1" with each press.	
2	Down ▼	Press to decrement the value by "1" with each press.	
3	OK	Press to accept the changes.	
4	Cancel	Press to return to the **Setting Menu** screen without accepting the changes.	

Model	Selection Range		Default	
	Brightness	Contrast	Brightness	Contrast
TFT Models: EA7-T6CL-R, EA7-T6CL, EA7-T6C EA7-T8C, EA7-T10C, EA7-T12C & EA7-T15C	1 to 7	N/A	7	N/A
STN Grayscale: EA7-S6M-R & EA7-S6M STN Color: EA7-S6C-R EA7-S6C	N/A	1 to 7	N/A	6

Setting – Touch Screen Calibration

This procedure is used to calibrate the touch screen to ensure accuracy of the touch areas. There are five points on the touch screen that the calibration is based around. The adjustment relies on very narrow areas for the calibration points.

NOTE: *The panel will display the Touch Screen Calibration window on power up until the calibration procedure is completed and saved.*

Item No.	Function	Description	Comment
1	**Points 1a thru 1e**	The touch screen calibration crosshairs will appear individually in the order of point 1a thru 1e respectively as each proceeding crosshair is pressed.	If the touched co-ordinate point is too far off from normal, then the procedure will return to Point 1a.
2	**Cancel**	Press to return to the **Setting Menu** screen without accepting the changes.	
3	**Press here to save & quit.**	Press to accept the changes and return to the **Setting Menu** screen.	If you do not save, you will have to calibrate the panel again after the next power cycle.
4	**Press here to retry.**	The current adjustment data is canceled and the procedure is returned to point 1a.	

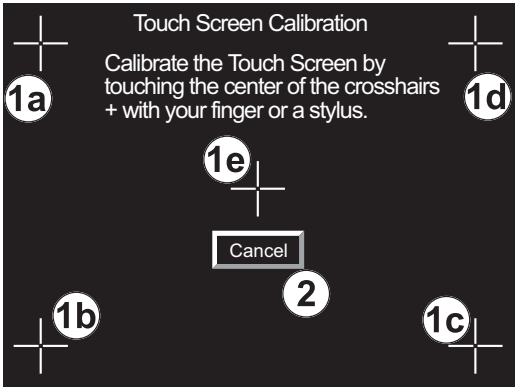

Points 1a thru 1e

Final

Setting – Beeper

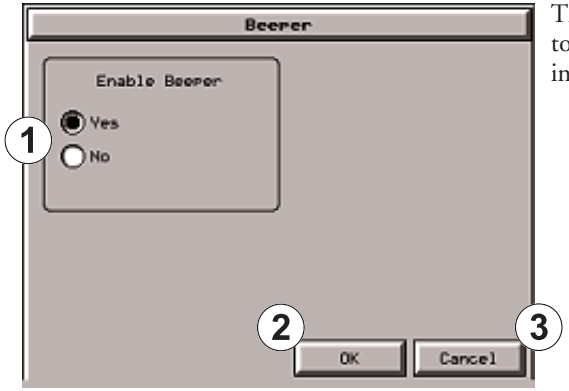

This system setup screen function is used to enable or disable the touch panel's internal beeper.

Item No.	Function	Description	Comments
1	**Yes**	Change Enable to Beeper.	
2	**No**	Change Disable to Beeper.	
3	**OK**	Press to accept the changes and return to the **Setting Menu** screen.	
4	**Cancel**	Press to return to the **Setting Menu** screen without accepting the changes.	

NOTE: *The project settings in the* ***C-more*** *programming software* ***Panel Manager*** *will override the touch panel's internal setting upon initial download.*

Setting – IP Address Setting

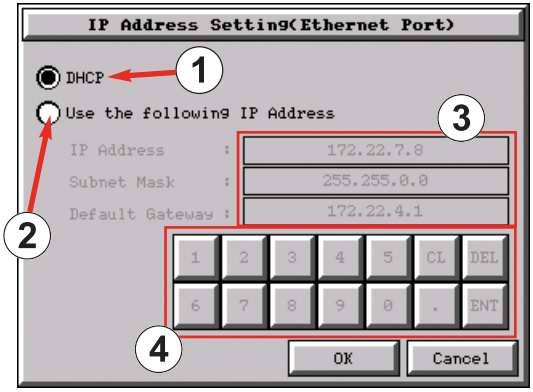

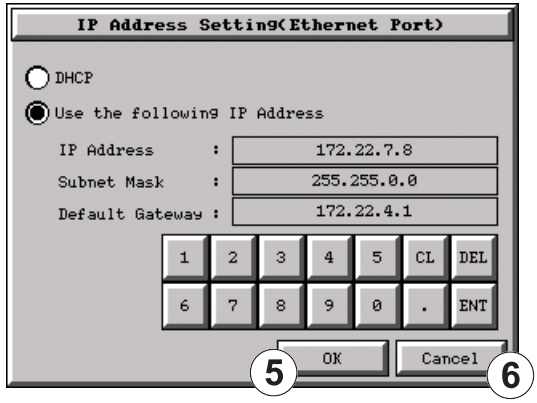

Item No.	Function	Description	Comment
1	**DHCP**	"DHCP" is enabled as the default when this system setup screen is first selected. All of the other selections on this screen are dimmed when "DHCP" is selected and are not available.	
2	**IP Address**	The "Use the following IP Address" setting is selected when its radio button is pressed. An IP Address can be assigned as follows: 1.) Select the address type: a.) IP Address b.) Subnet Mask c.) Default Gateway 2.) Use the numerical keypad to input the address. Use the decimal key to enter the dot separator. 3.) Press the **"ENT"** key when finished with each field.	Note: If an Ethernet cable is not connected to the touch panel from an active Ethernet device, then the IP Address will show as 0.0.0.0.
3	**IP Address** **Subnet Mask** **Default Gateway**	Select the field that needs to be assigned by touching the entry value and use the keypad to enter the desired address.	Each field can be independently assigned.
4	**Keypad**	The keypad is used to enter the Address: Use the numeric keys and the **"dot"** key to enter the address, e.g: 192.168.10.1 **"ENT"** = Enter key sets value **"CL"** = Clear value entered **"DEL"** = Delete 1 character with each press	The **"ENT"** key must be pressed to accept the entry. If the **"ENT"** key is not pressed, then the previous value will remain when another area is selected or the **"Cancel"** key is pressed.
5	**OK**	Press to accept the changes and return to the **Setting Menu** screen.	
6	**Cancel**	Press to return to the **Setting Menu** screen without accepting the changes.	

Test Menu

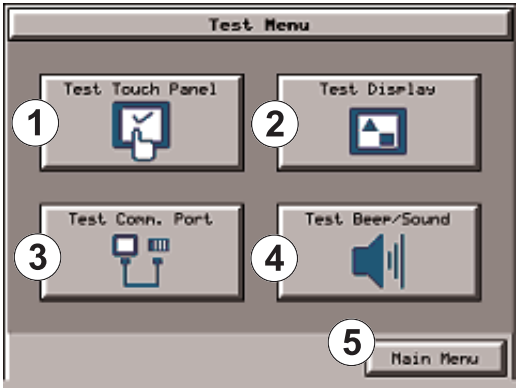

The **Test Menu** gives the user the ability to test the operation of the touch screen, test the LCD display, test the various communication ports, and also test the internal beeper and the audio line out through an user supplied amplified (stereo) speaker(s).

Item No.	Function	Description	Comments
1	**Test Touch Panel**	Press to go to the **Test Touch Panel** screen.	
2	**Test Display**	Press to go to the **Test Display** screen.	
3	**Test Communication Port**	Press to go to the **Test Communication Port** screen.	
4	**Test Beep/Sound**	Press to go to the **Test Beep/Sound** screen.	
5	**Main Menu**	Press to return to the **Main Menu** screen.	

Test Menu – Test Touch Panel

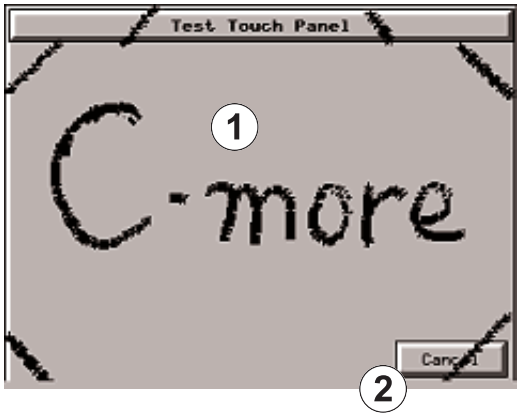

Using this test, normal or unusual operation of the analog touch panel can be determined.

Testing:

If an area of the touch screen is suspected to be inoperable, touch that area of the screen while in the **Test Touch Panel** screen mode. The screen pixels should turn black in that area. If the screen pixels do not turn black when touched, then the touch screen is defective or needs to be calibrated. See **Setting - Adjust Touch Screen** on page 5-22.

Item No.	Function	Description	Comments
1	**Touch area**	Display Size / Touch Area 6 Inch / 320 X 240 8/10 Inch / 640 X 480 12 Inch / 800 X 600 15 Inch / 1024 X 768	Both the title bar (Test Touch Panel) and **Cancel** button can be drawn across to test the touch operation.
2	**Cancel**	Press to return to the **Test Menu** screen.	

Test Menu – Test Display

There are two different test patterns that may be run on the LCD display to allow the user to check for display screen defects. If the screen is **not** touched within 3 seconds of **Test Pattern 1** being displayed, then **Test Pattern 2** will be displayed until the screen is touched, otherwise **Test Pattern 1** will remain until cancelled.

Test Pattern 1 displays a test pattern of 16 grayscale graduations and RGB colors.

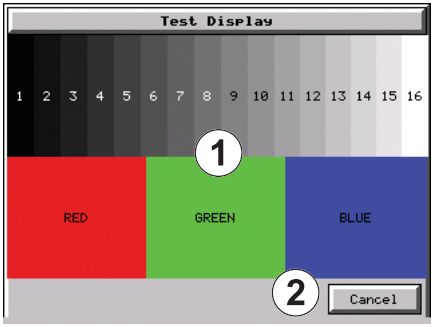

Test Pattern 2 will follow the pattern as shown in the following chart with the color wiping across the screen in the direction indicated by the arrows, then repeats:

3

Color	1st Time	2nd Time	3rd Time	4th Time
RED	→	↑	↓	←
GREEN	←	→	↑	↓
BLUE	↓	←	→	↑

Item No.	Function	Description	Comments
1	**Touch the Test Display screen.**	Press the screen anywhere except the **Cancel** button and the shown **Test Pattern 1** remains.	If the **Test Display** screen is not touched, then in three seconds the display will move to **Test Pattern 2**.
2	**Cancel (Test Pattern 1)**	Press to return to the **Test Menu** screen.	
3	**Touch Anywhere (Test Pattern 2)**	Touch the sceen anywhere during **Test Pattern 2** and return to the **Test Menu** screen.	

Test Results: If any pixels on the screen do not appear the same color as the surrounding pixels, the LCD screen may be defective. A single pixel gone bad is relatively common. Surrounding pixels going bad over time is another indication the LCD screen may be defective.

Test Menu – Test Communication Ports: Serial

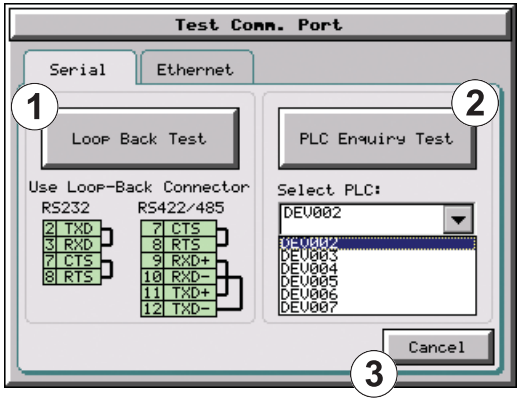

The following test can be used to check the operation of the serial communication port, with the use of a loop back connector and can also check the status of the serial communications to any connected and configured PLC.

Continued on the next two pages.

Item No.	Function	Description	Comments
1	**Loop Back Test**	This function checks the serial comm port for proper operation with a loop back connector.	
2	**PLC Enquiry Test**	This function allows the ability to select any PLC that that may be connected to the touch panel via a serial connection and checks to see if the communications are working correctly.	Note: The PLC serial communications port settings must be configured in the ***C-more*** programming software.
3	**Cancel**	Press to return to the **Test Menu** screen.	

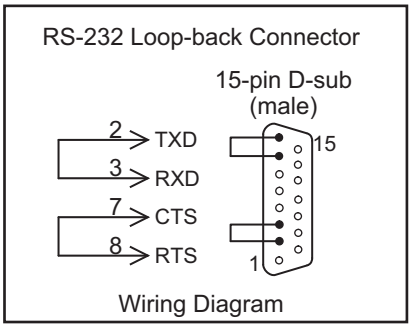

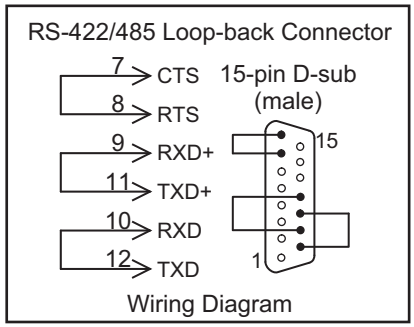

Test Menu – Serial Port Test

PLC Serial Comm Port – Loop Back Test

Item No.	Function	Description	Comments
1	**Determine Loop Back Connector**	1.) When testing an RS-232C serial connection, connect pin 2 to 3 and pin 7 to 8 on an appropriate D-SUB 15-pin male connector and plug it into the serial PLC comm port on the rear of the touch panel. 2.) When testing an RS-422 or RS-485 serial connection, connect pin 9 to 11, pin 10 to 12 and pin 7 to 8 on an appropriate D-SUB 15-pin male connector and plug it into the serial PLC comm port on the rear of the touch panel.	
2	**Start Test**	Press the **Loop Back Test** button to start the serial comm port test.	
3	**Test Results**	1.) Bytes Sent: The number of bytes sent after a test is started. 2.) Receive Counts: The number of bytes which are received after the test is started. 3.) Error Counts: The number of bytes which have not been received after the test is started. 4.) RTS/CTS Test: Pass/Fail RTS is turned on and if CTS receives the signal then the test shows “Pass”, otherwise the test shows “Fail”.	Note: The test will continue to run until the **Cancel** button is pressed. If there are any error counts, check the loop back connector. If it is OK, call Tech Support.
4	**Cancel**	Press to return to the **Test Comm. Port** screen.	

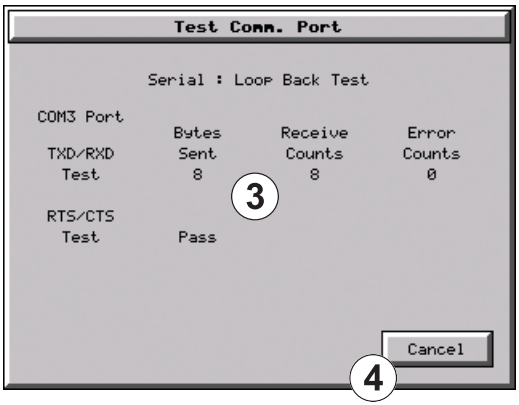

Test Menu – PLC Enquiry Test: Serial Connection

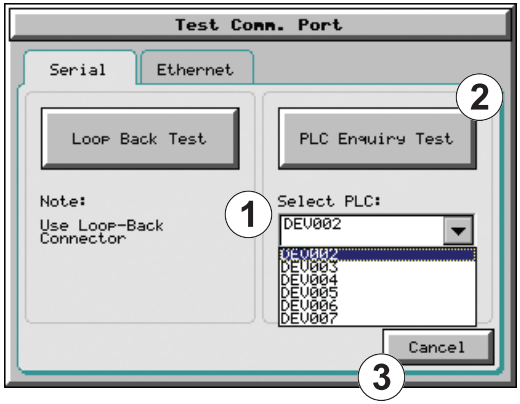

This function allows the ability to select any PLC that may be connected to the touch panel through a serial comm. port connection and checks to see if the communications are working correctly.

Note: *The communications protocol for the PLC being selected must be configured the same as the* ***C-more*** *touch panel. The touch panel's PLC serial communications are configured using the* ***C-more*** *Programming Software's Panel Manager.*

Item No.	Function	Description	Comments
1	**Select PLC**	Select any PLC that is shown in the drop down menu. The PLC selected will connect to the touch panel at the time of a test.	Only PLC's that have been configured in the ***C-more*** Programming Software will appear in the **Select PLC:** list.
2	**PLC Enquiry Test**	Four test read packets are sent to the selected PLC. Test result will be either Pass or Fail.	
3	**Cancel**	Press to return to the **Test Menu** screen.	

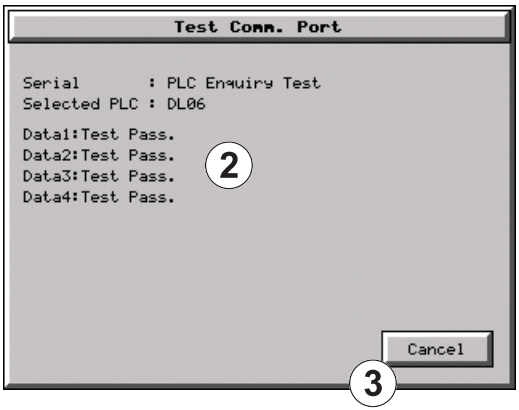

Test Menu – Test Communication Ports: Ethernet

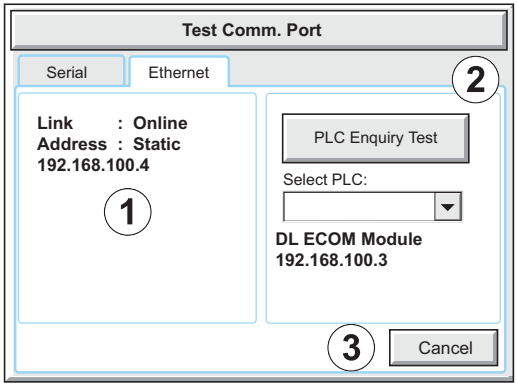

The following test feature can be used to check the operation of the Ethernet communication port by indicating if an Ethernet link has been established or not, and can also check the status of the Ethernet communications to any connected PLC.

Base featured models (-R) do not include an Ethernet port, therefore this check is not displayed.

Note: *The communications protocol for the PLC being selected must be configured the same as the* ***C-more*** *touch panel. The touch panel's PLC Ethernet communications are configured using the* ***C-more*** *Programming Software's Panel Manager.*

5

Item No.	Function	Description	Comments
1	**Ethernet Connected**	This area displays information to whether an Ethernet link has been established for the touch panel's Ethernet comm port or not. Displays panel's IP address and shows whether it is static or assigned by a DHCP server.	
2	**PLC Enquiry Test**	This function allows the ability to select any PLC configured in the project that may be connected to the touch panel via an Ethernet connection and checks to see if the communications are working correctly.	
3	**Cancel**	Press to return to the **Test Menu** screen.	

Example of displayed message when the touch panel's Ethernet port is not connected.

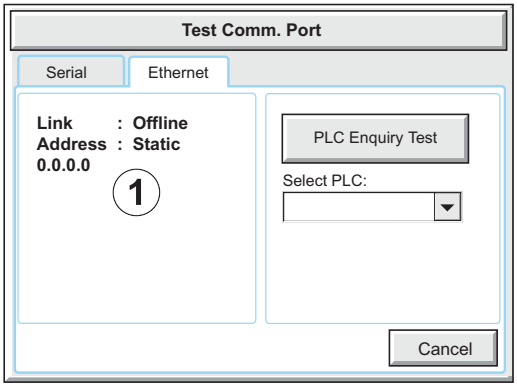

Typical Ethernet connection with Ethernet switch.

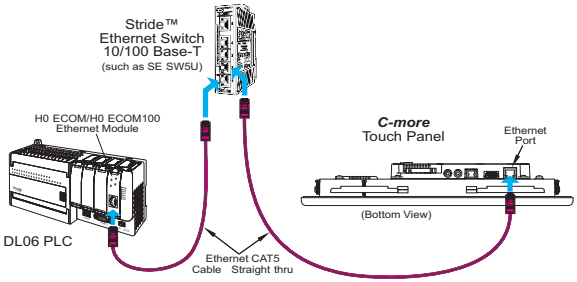

Test Menu – PLC Enquiry Test: Ethernet Connection

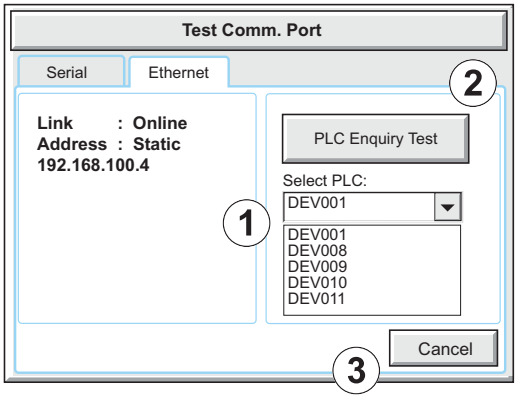

This function allows the ability to select any PLC configured in the project that may be connected to the touch panel through an Ethernet port connection and checks to see if the communications are working correctly.

Note: *The communications protocol for the PLC being selected must be configured the same as the* ***C-more*** *touch panel. The touch panel's PLC Ethernet communications are configured using the* ***C-more*** *Programming Software's Panel Manager.*

Item No.	Function	Description	Comments
1	**Select PLC**	Select any PLC that is shown in the drop down menu.	
2	**PLC Enquiry Test**	The following are the steps that the **Ethernet PLC Enquiry Test** performs: 1.) Ping the network 4 times for the PLC selected. 2.) Four of the test read packets are sent to the selected PLC. Test result will be either Pass or Fail. However, if the result of pinging the network shows an error, the test is stopped.	
3	**Cancel**	Press to return to the **Test Menu** screen.	

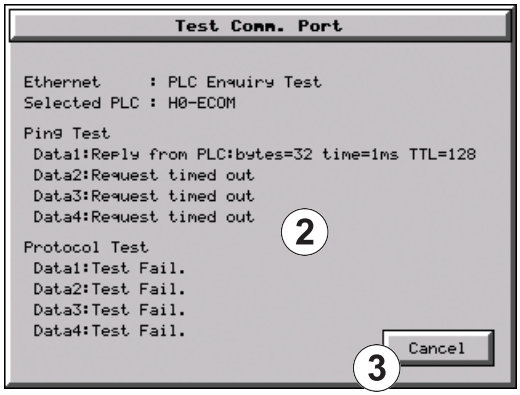

Test Menu – Test Beep/Sound

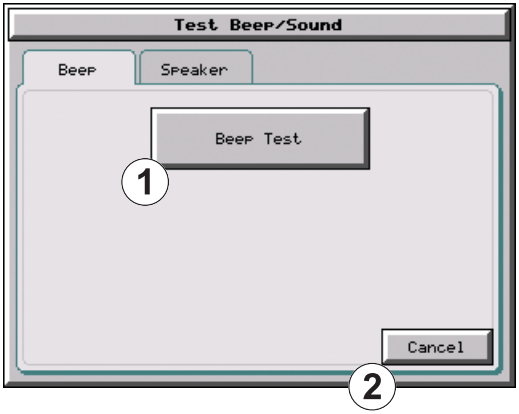

Item No.	Function	Description	Comments
1	**Beep Test**	The internal Beeper can be tested from this system setup screen whether the Beeper is enabled or disabled. After the **Beep Test** button is pressed then released, the Beeper will sound for 500 msec.	
2	**Cancel**	Press to return to the **Test Menu** screen.	

Test Menu – Test Beep/Sound (cont'd)

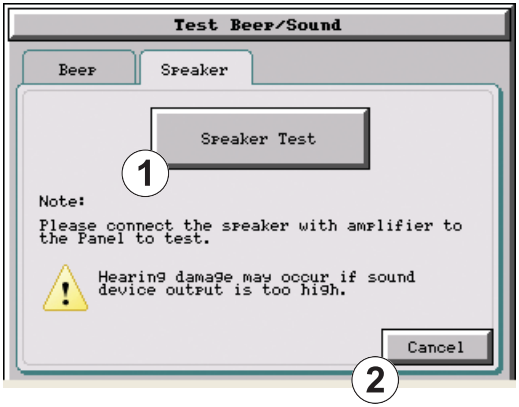

WARNING: Hearing damage may occur if the volume on the user supplied external amplified speaker is set too high.

Item No.	Function	Description	Comments
1	**Speaker Test**	The **Speaker Test** function requires that a speaker(s) with an amplifier (can be stereo) be connected to the Audio Line Out stereo jack on the rear of the touch panel. After the **Speaker Test** button is pressed then released, a system provided Test.WAV file will play once.	
2	**Cancel**	Press to return to the **Test Menu** screen.	

Memory Menu

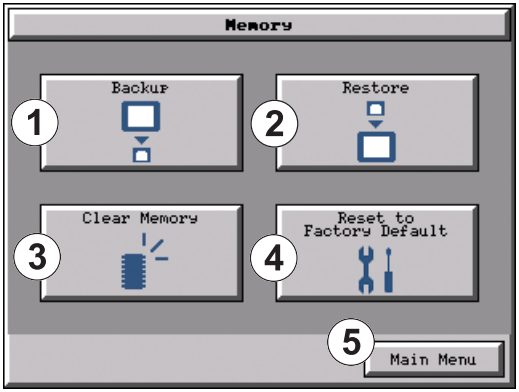

The user's project, system, log and recipes files can be backed up and restored to either a CompactFlash memory card (CF1 or CF2), or a USB memory device. From this menu the user can also clear the project log files. The user also has the ability to clear the memory within the *C-more* touch panel.

Base featured models (-R) do not include CF1 or CF2.

5

Item No.	Function	Description	Comments
1	**Backup**	Backup project, system, log & recipe files to the following memory devices: USB port - Type A: USB pen drive CF Slot #1 (standard port): CompactFlash CF Slot #2 (optional port): CompactFlash See page 5-37 for details.	Any USB pen drive or CompactFlash memory device capacity available is supported. The backup data files are created and copied to a folder on the memory device named "EA_Memory Copy." The project file is named StartupStorage.eas "Log" and "Recipe" folders with the appropriate data files are also created on the memory device.
2	**Restore**	Restore project, system, log & recipe files to the internal memory from one of the following memory devices: USB port - Type A: USB pen drive CF Slot #1 (standard port): CompactFlash CF Slot #2 (optional port): CompactFlash See page 5-44 for details.	A folder on the memory device named "EA_Memory Copy" must exist containing a file named "StartupStorage.eas". The project data file is stored in this file, and if the system data file was backed up, it also will be stored in this file. Any backed up log or recipe data files will be located under the appropriate "Log" or "Recipe" folders.
3	**Clear Memory**	Clear selected data files from the memory of the following internal memory or external memory devices: Built-in FLASH Memory USB port - Type A: USB pen drive CF Slot #1 (standard port): CompactFlash CF Slot #2 (optional port): CompactFlash See page 5-50 for details.	Can only clear project, log and recipe data files of the Built-in FLASH memory. Can clear entire contents or individual data files of external memory devices.
4	**Reset to Factory Default**	The touch panel's internal memory is set to the original factory defaults.	Clears all project memory.
5	**Main Menu**	Press to return to the **Main Menu** screen.	

Project Executed from CompactFlash (CF Slot #1)

If a CompactFlash card is located in the CF1 slot at the time a project is transferred to the panel, the project will be stored on the CompactFlash card, not in the internal Built-in FLASH memory.

If CF1 slot contains a CompactFlash with a project and:

1.) The touch panel's power is cycled, then

2.) The project file stored on the CompactFlash is loaded into the touch panel's internal DRAM memory and executed. Please note that the project stored in the panel's internal FLASH memory is NOT loaded into the internal DRAM memory when a CompactFlash memory card is present. Any project in the internal FLASH memory is cleared.

WARNING: During power up with a CompactFlash plugged into the CF1 Slot, please do not remove the memory card from the slot. Damage to the CompactFlash and possibly the touch panel may result.

WARNING: After a firmware update, the project files which are located in either the touch panel's internal FLASH memory or the CompactFlash plugged into CF1 Slot are cleared. The programming software will need to be used to Transfer the project file back into the panel. If you wish to retain the project on the CompactFlash, power down the panel and remove the CompactFlash before performing a firmware upgrade.

Increasing Project Memory Size using a CompactFlash in CF1 Slot:

If a project is transferred to the panel with a CompactFlash card in CF1 Slot, the Font and Recipe data files are not included in the 10MB (40MB for 12" and 15" models) project size. Therefore using CF1 can allow a project to be loaded that is larger than 10MB if the excessive size is caused by Fonts and/or Recipe Sheets.

Memory – Backup

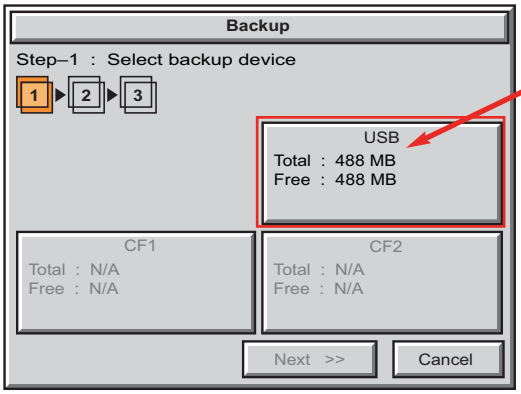

The **Memory - Backup** selection allows you to backup the panel's **Project**, **Log** files, **Recipe** files or even the **System** (firmware & OS) files to either a CompactFlash (**CF**) or **USB** pen drive. The available memory devices will be displayed showing the total and free available memory for that device. If the device is not available, it will be grayed out. The **Next** button is grayed out until a device is selected.

The **Cancel** button can be pressed at any time to return to the **Memory Menu** screen.

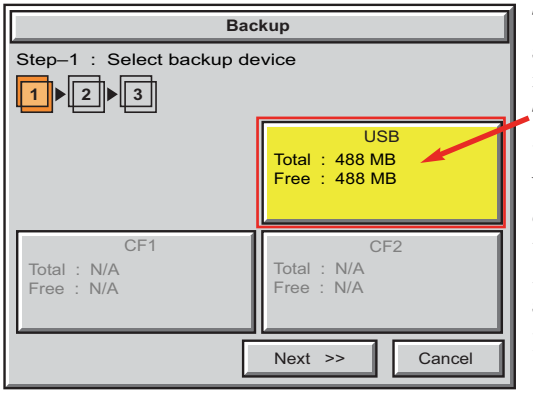

This is an example of a USB memory device selected to be used for backing up the panel's data file(s).

The selected device is highlighted. Pressing again un-selects it.

When there are more than two available backup devices, the one selected will be highlighted. If there is only one available memory device, it still needs to be highlighted in order to go to the next step.

Press the **Next** button to continue to Step 2.

Note: *If you have a memory device inserted into the proper port on the touch panel, but it doesn't show up as highlighted in Step 1 of the* ***Backup*** *setup screen, then try a different device to determine if the memory device is defective or if there is a possible problem with the memory device connection. It may not be compatible with the panel. This rarely happens with CF memory, but some USB pen drives are not USB 1.1 compatible and will not work with* ***C-more*** *touch panels. Also, some USB pen drives may take several minutes before they are recognized by the panel.*

Please read the explanation for the availability of CF1 under different conditions as shown on the next two pages.

Memory – Backup (cont'd)

CF1 Availability Explanation:

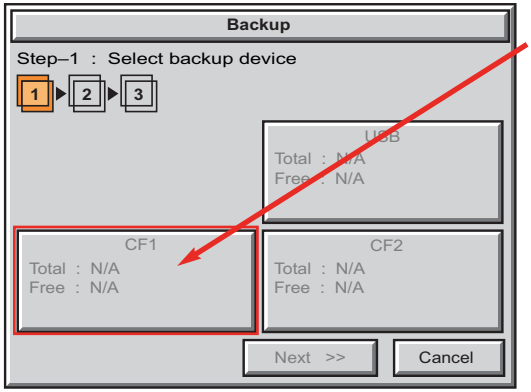

If there is no CompactFlash inserted into CF1 Slot, then the CF1 button's Total and Free memory will show as N/A and be grayed out.

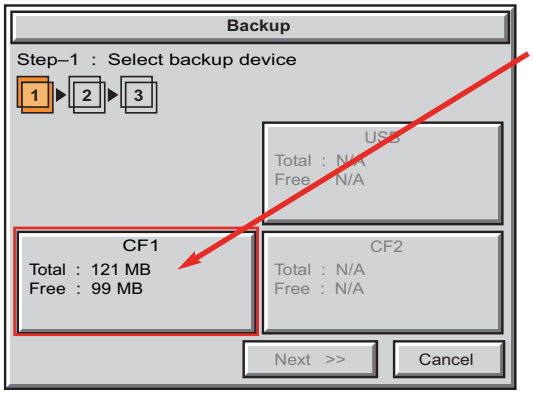

If the panel is powered up or rebooted with a CompactFlash inserted into CF1 Slot, then the CF1 button's Total and Free memory will be displayed.

Memory – Backup (cont'd)

CF1 Availability Explanation (cont'd):

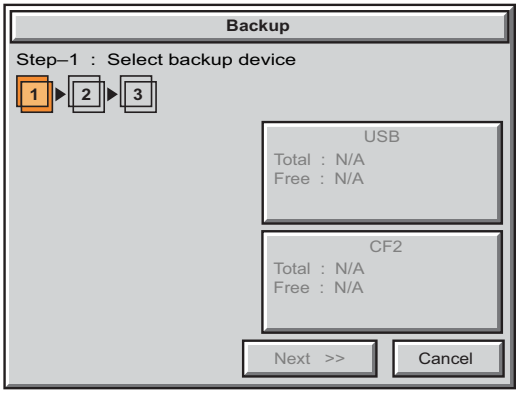

If a CompactFlash is inserted into CF1 Slot and a project is transferred using the *C-more* Programming Software's **Project Transfer** utility **Panel > Transfer**, then the CF1 will not show up in the **Memory - Backup** Step 1 device choices. The CompactFlash will have the runtime files stored on it that get loaded into the touch panel's internal DRAM memory when powered up or rebooted.

5

Below is an example of the folder and file structure that is stored on the CompactFlash in the CF1 Slot for a project that was directly transferred from the *C-more* **Programming Software's Project Transfer** function when viewed in Windows® Explorer on a PC.

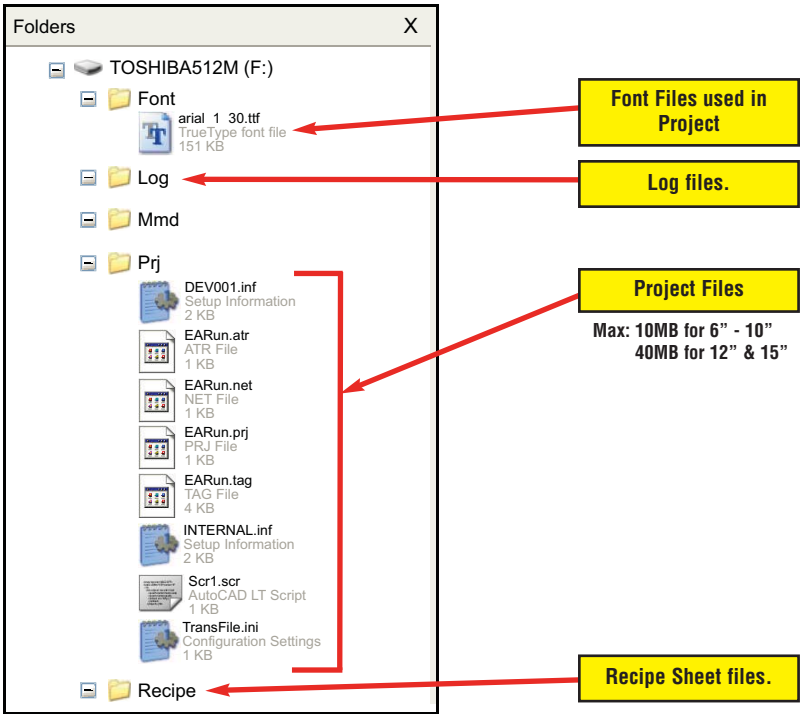

Memory – Backup (cont'd)

Note: *The following definitions are for the various file types that can be backed up:*
Project data *– consists of the actual developed project data that is created in the* ***C-more*** *programming software and includes all functionality, objects, screens, tag names, labels, comments, graphics, etc. Included in backup file name StartupStorage.eas.*
Recipe data – *consists of all the data values and labels that have been created for the various recipe sheets. Includes all recipe sheets loaded to the panel. Only recipe sheets used in the project are loaded to the panel.*
System data *– consists of the operating system, firmware and run time files. Included in backup file name StartupStorage.eas.*
Log data *– consists of the Alarm Log, Message Log and Trend Data Logging files.*

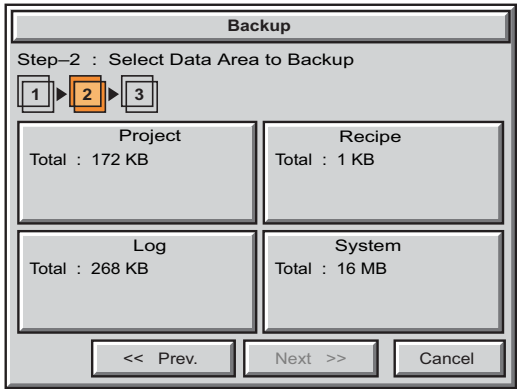

Select the data file(s) to be backed up by pressing the appropriate data file button. The selection will be highlighted.

Pressing the highlighted data file button again will turn it off.

The **Next >>** button will stay grayed out until at least one data file is selected.

Any file type not available will be grayed out.

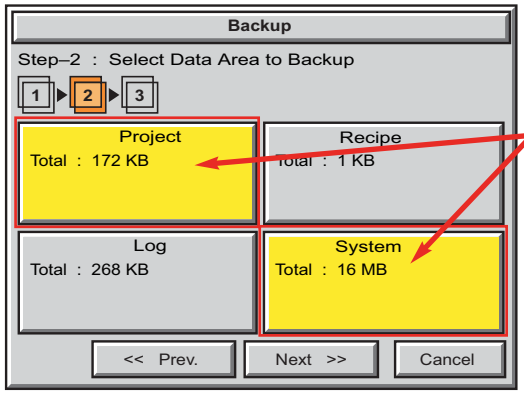

This is an example of data files selected for backing up.

The selected data files are highlighted.

The **Next >>** button is now enabled.

Pressing **Cancel** will return to the previous menu.

Press the **Next** button to continue.

Note: *In the case of the* ***Project*** *and* ***System*** *files, these can be* ***Restored*** *later to another panel.*
In the case of the ***Recipe*** *files, they can be edited externally from the panel and then* ***Restored*** *to the panel.*
The ***Log*** *files are for viewing purposes only.*
See Page 5-44 for instructions on Restoring the Project, System and or Recipe files to a Panel.

Memory – Backup (cont'd)

Backup Data Files Naming and Organization

The following graphic shows how the various data files are organized on the memory device when doing a **Backup** and also the file naming convention that is used when viewed in Windows® Explorer on a PC.

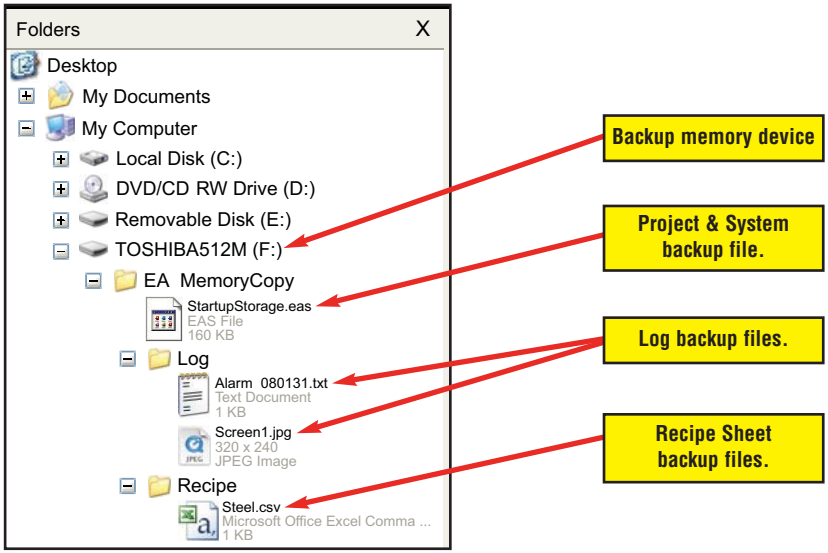

Memory – Backup (cont'd)

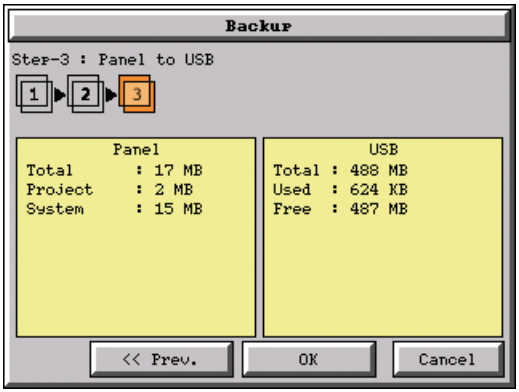

The next system setup screen allows the verification of the data file selections. When the **OK** button is pressed, the backup begins.

The user can return to the previous screen by pressing the **<< Prev** button.

This message is displayed during the **Backup** copying process. Press the **Cancel** button to abort the backup.

The following text is shown in the copying progress message box:

Copy to USB Memory:
"Please do not Power Off or Remove USB"

Copy to CF1 or CF2:
"Please do not Power Off or Remove CF"

WARNING: During the copying process, Do not power off the touch panel or remove the memory device.

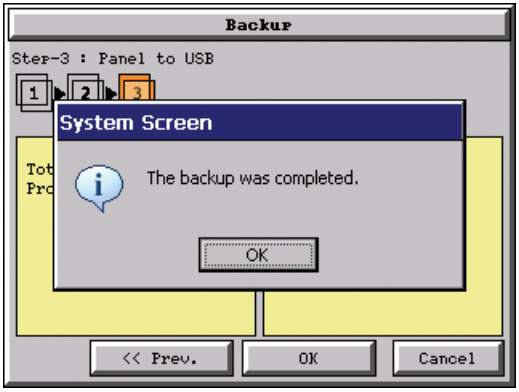

This message is displayed to indicate the **Backup** is complete. Press the **OK** button to return to the previous menu selection.

Memory – Backup (cont'd)

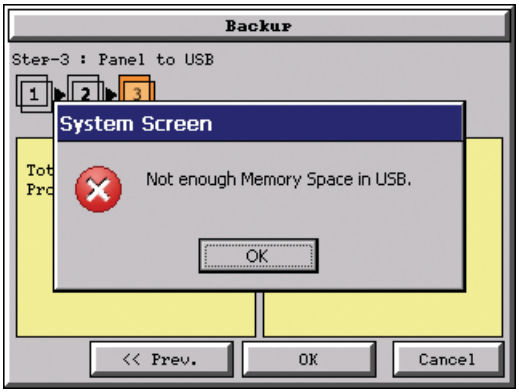

Warning Messages

If the destination does not have enough space to store the selected memory size, then the message shown here will be displayed. Press the **OK** button to clear the warning message.

The warning message will read "Not enough Memory Space in %Device%".

%Device% will show either "CF1", "CF2", or "USB".

This warning message will be displayed if the backup Memory device fails or is removed during the backup. Press the **OK** button to clear the warning message.

The warning message will read "Backup Failed. "%Device% cannot be found".

%Device% will show either "CF1", "CF2", or "USB".

Refer to **Chapter 8: Troubleshooting** for additional help.

For any other reason the backup fails, then this warning message will be displayed. Press the **OK** button to clear the warning message.

The warning message will read "Backup Failed".

Refer to **Chapter 8: Troubleshooting** for additional help.

Memory – Restore

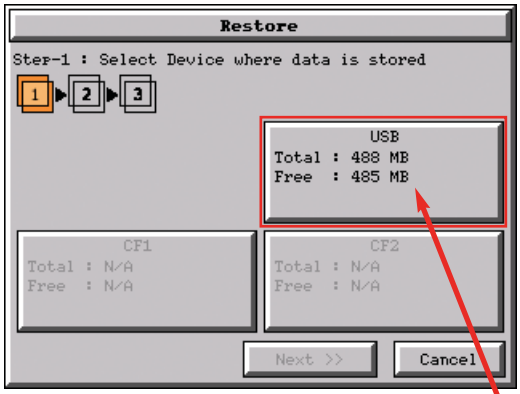

The **Memory - Restore** function is used to:

1.) **Restore** a project previously backed up on a CompactFlash card or USB pen drive memory device to the same panel. See **Memory - Backup** on page 5-37.

2.) Copy a project from one panel to another panel using a memory device to physically transport the data files.

3.) **Restore** a project into the panel that was transfered to an "External Memory Device" using the C-more Programming Software.

4.) **Restore Recipe Sheet(s)** previously backed up to a memory device or copied to the memory device using a PC.

The available memory devices will be displayed showing the total and free available memory for that device. If the device is not available, it will be grayed out. The **Next** button is grayed out until a device is selected.

The **Cancel** button can be pressed at any time to return to the **Memory Menu** screen.

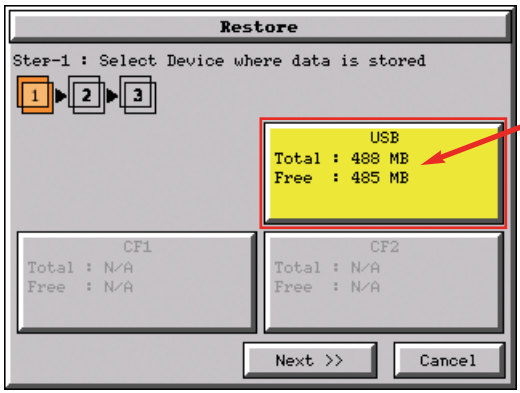

This is an example of a USB memory device selected to be used for restoring the data file(s).

The selected device is highlighted. Pressing again unselects it.

When there are more than two available restore devices, the one selected will be highlighted. If there is only one available memory device, it needs to be highlighted in order to go to the next step.

Press the **Next** button to continue to continue to Step 2.

Note: *If you have a memory device inserted into the proper port on the touch panel, but it doesn't show up as highlighted in Step 1 of the* ***Restore*** *setup screen, then try a different device to determine if the memory device is defective or if there is a possible problem with the memory device connection. It may not be compatible with the panel. This rarely happens with CF mamory, but some USB pen drives are not USB 1.1 compatible and will not work with* ***C-more*** *touch panels. Also, some USB pen drives may take several minutes before they are recognized by the panel.*

Memory – Restore (cont'd)

Please read the explanation for the availability of CF1 under different conditions as shown on this page and the next.

CF1 Availability Explanation:

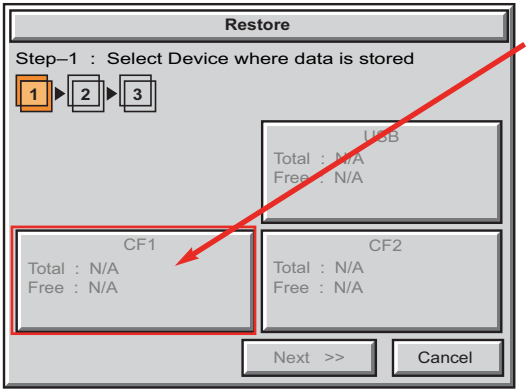

If there is no CompactFlash inserted into CF1 Slot, then the CF1 button's Total and Free memory will show as N/A and be grayed out.

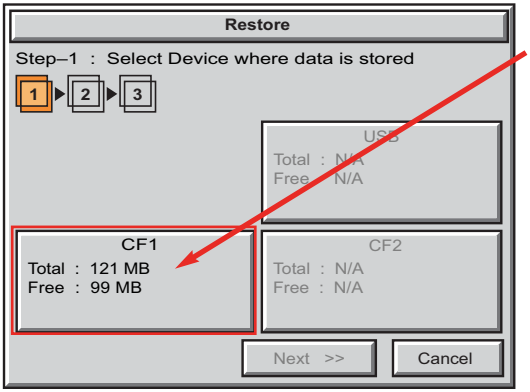

If the panel is powered up or rebooted with a CompactFlash inserted into CF1 Slot, then the CF1 button's Total and Free memory will be displayed.

Memory – Restore (cont'd)

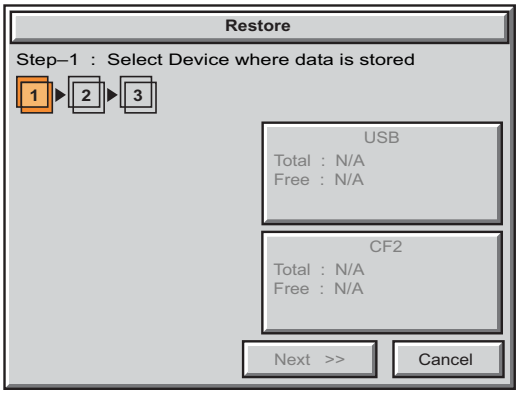

CF1 Availability Explanation (cont'd):

If a CompactFlash is inserted into CF1 Slot and a project is transferred using the *C-more* Programming Software's **Project Transfer** utility **Panel > Transfer**, then the CF1 will not show up in the **Memory - Backup** Step 1 device choices. The CompactFlash will have the runtime files stored on it that get loaded into the touch panel's internal DRAM memory when powered up or rebooted.

See page 5-39 for an example of the folder and file structure that is stored on CF1.

Note: *The following definitions are for the various file types that can be backed up:*
Project data *– consists of the actual developed project data that is created in the* ***C-more*** *programming software and includes all functionality, objects, screens, tag names, labels, comments, graphics, etc. Included in backup file name StartupStorage.eas.*
Recipe data – *consists of all the data values and labels that have been created for the various recipe sheets. Includes all recipe sheets loaded to the panel. Only recipe sheets used in the project are loaded to the panel.*
System data *– consists of the operating system, firmware and run time files. Included in backup file name StartupStorage.eas.*
Log data *– consists of the Alarm Log, Message Log and Trend Data Logging files.*

Memory – Restore (cont'd)

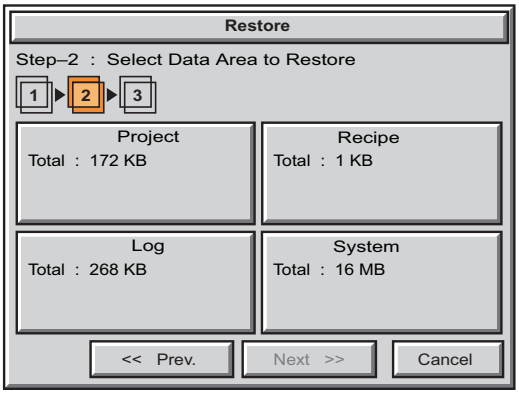

Select the data file(s) to be restored by pressing the appropriate data file button. The selection will be highlighted. The data file can be either the **Project**, **System** and/or **Recipe** files. The selected data is restored to the internal built-in FLASH memory if there is no CompactFlash memory card inserted into the CF1 slot.

Pressing the highlighted data file again will turn it off.

The **Next >>** button will stay grayed out until at least one data file is selected.

Any file type not available will be grayed out.

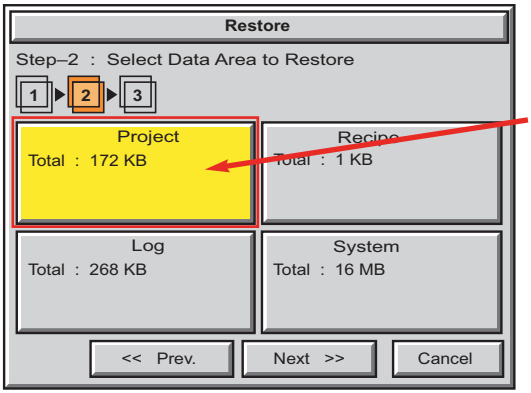

This is an example of a file selected to restore.

The selected file is highlighted.

The **Next >>** button is now enabled.

Pressing **Cancel** will return to the previous menu.

Press the **Next** button to continue.

Note: *The following definitions are for the various file types that can be backed up:*
Project data *– consists of the actual developed project data that is created in the* ***C-more*** *programming software and includes all functionality, objects, screens, tag names, labels, comments, graphics, etc. Included in backup file name StartupStorage.eas.*
Recipe data – *consists of all the data values and labels that have been created for the various recipe sheets. Includes all recipe sheets loaded to the panel. Only recipe sheets used in the project are loaded to the panel.*
System data *– consists of the operating system, firmware and run time files. Included in backup file name StartupStorage.eas.*
Log data *– consists of the Alarm Log, Message Log and Trend Data Logging files.*

Memory – Restore (cont'd)

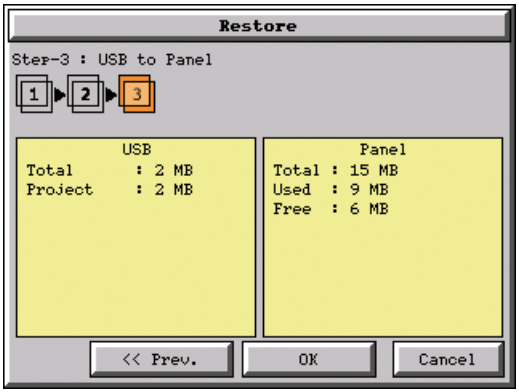

The data selected to restore is checked. If the data is good, then the **OK** button can be pressed to start the restore.

If there is a problem with the data, the **OK** button will remain grayed out and the user can return to the previous screen by pressing the << Prev button.

The problem could be caused by a corrupted data file. See **Chapter 8: Troubleshooting** for additional help.

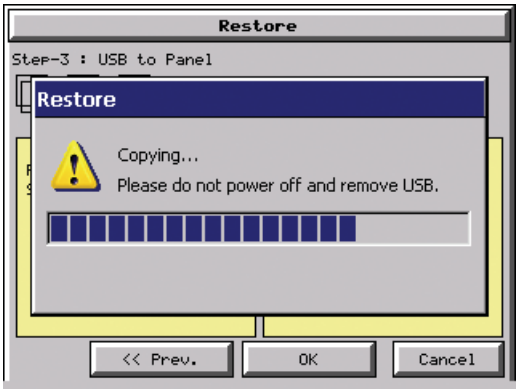

This message is displayed during the **Restore** process. Press the **Cancel** button to abort the backup.

The following text is shown in the copying progress message box:

Copy to USB Memory:
"Please do not Power Off or Remove USB"

Copy to CF1 or CF2:
"Please do not Power Off or Remove CF"

WARNING: During the copying process, Do not power off the touch panel or remove the memory device.

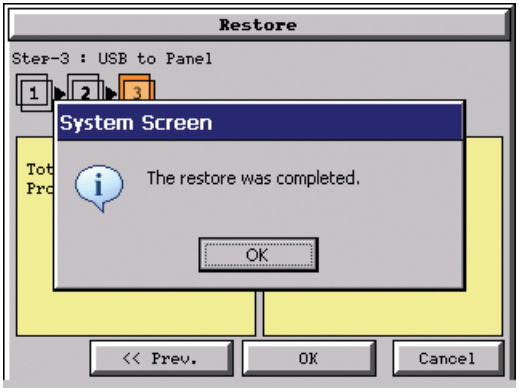

This message is displayed to indicate the **Restore** is complete. Press the **OK** button to return to the previous menu selection.

Memory – Restore (cont'd)

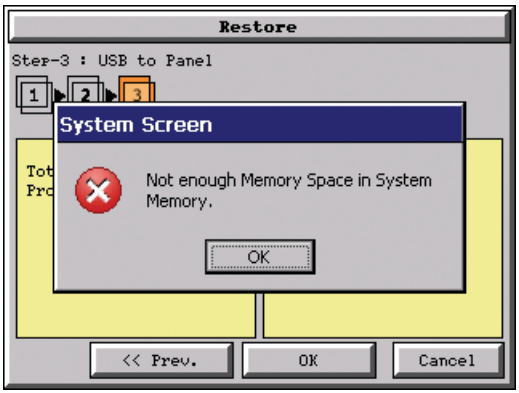

Warning Messages:

If the system memory does not have enough space to restore the selected memory size, then the message shown here will be displayed. Press the **OK** button to clear the warning message.

The warning message will read "Not enough Memory Space in System Memory".

The Project size must be less than 10 MByte for 6"-10" panels and less than 40 MByte for 12" & 15" panels.

This warning message will be displayed if the restore Memory device fails or is removed during the backup. Press the **OK** button to clear the warning message.

The warning message will read "Restore Failed. "%Device% cannot be found".

%Device% will show show "CF1", "CF2", or "USB".

Try using a different device with known good data in the same connector or using the device that is causing the error in a different connector.

For any other reason the restore fails, then this warning message will be displayed. Press the **OK** button to clear the warning message.

Memory – Clear Memory

This function is used to clear individually selected data files, or all data files, within the panel's **Built-in Memory**, or any installed memory device such as a USB pen drive, CompactFlash (CF1 or CF2).

Select the memory device to clear. If the device is not available, it will be grayed out.

The **Next** button is grayed out until a device is selected.

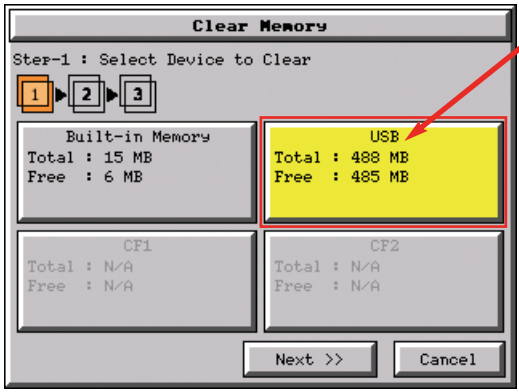

The selected device is highlighted. Pressing again un-selects it.

When there are more than two available backup devices, the one selected will be highlighted. If another is selected, then the highlight will change to the last one pressed. Only one device can be selected at a time.

Press the **Next** button to continue.

Memory – Clear Memory (cont'd)

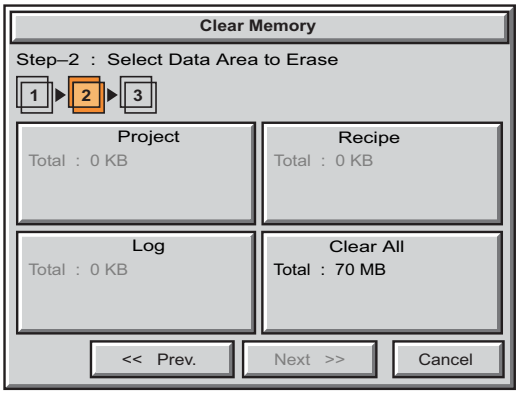

Select the data file(s) to be cleared.

This is an example of CF1, CF2 or USB memory that was selected in **Clear Memory - Step-1**.

The selected file will be highlighted. Pressing again un-selects it.

The **Next >>** button will stay grayed out until file(s) are selected.

Selecting **Clear All** will erase all files located on the memory device.

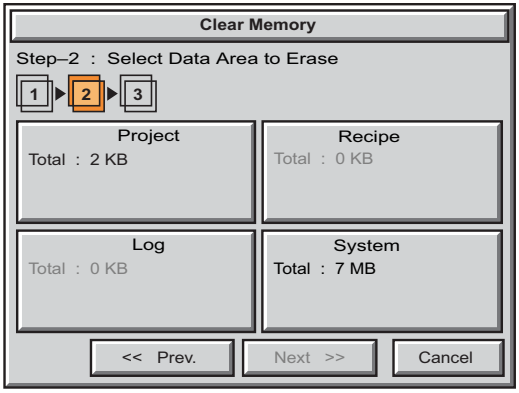

This is an example of **Built-in Memory** that was selected in **Clear Memory - Step-1**.

Notice the ability to select either the **Project** file, **Log** files, **Recipe** files, or the **System** files.

Note: *System files can not be cleared from the internal memory.*

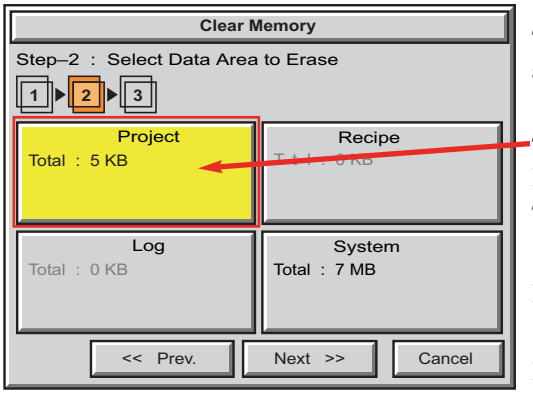

This is an example of the **Project** data file being selected for clearing.

The selected memory area is highlighted. Pressing again un-selects it.

The **Next >>** button is now enabled.

Pressing **Cancel** will un-select the file(s).

Press the **Next** button to continue.

Memory – Clear Memory (cont'd)

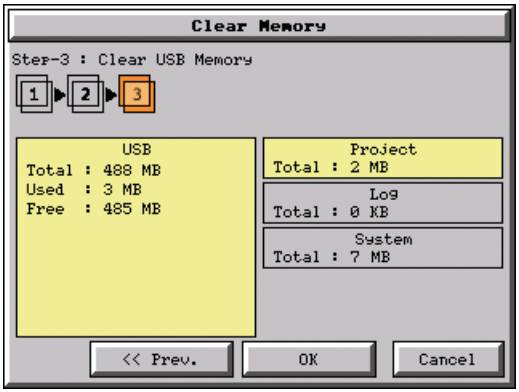

The data file(s)selected to clear are checked. If the data file is good, then the **OK** button can be pressed to start the clear procedure.

If there is a problem with the data file, the **OK** button will remain grayed out and the user can return to the previous screen by pressing the **<< Prev** button.

Press the **OK** button to continue.

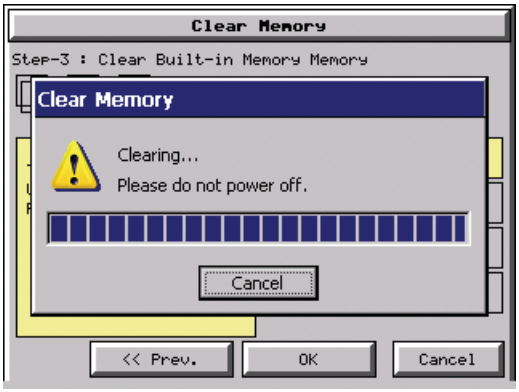

This message is displayed during the clearing process. Press the **Cancel** button to abort the clearing.

The following text is shown in the clearing progress message box:

Clearing Built-in Memory:
"Please do not Power Off"

Clearing USB Memory:
"Please do not Power Off or Remove USB"

Clearing CF1 or CF2

"Please do not Power Off or Remove CF"

WARNING: During the clearing process, do not power off the touch panel or remove the memory device.

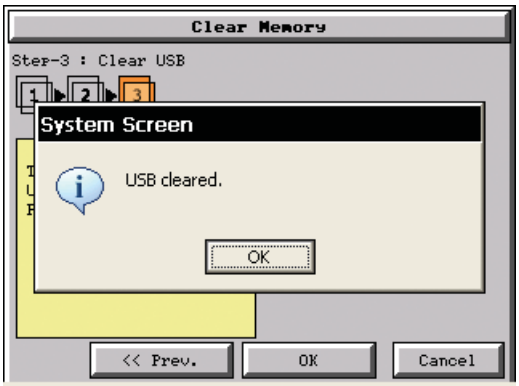

The following message is displayed when the clearing process is complete:

"%Device% cleared"

%Device% will show either "CF1", "CF2", or "USB".

Press the **OK** button to return to the **Memory Menu** screen.

Memory – Clear Memory (cont'd)

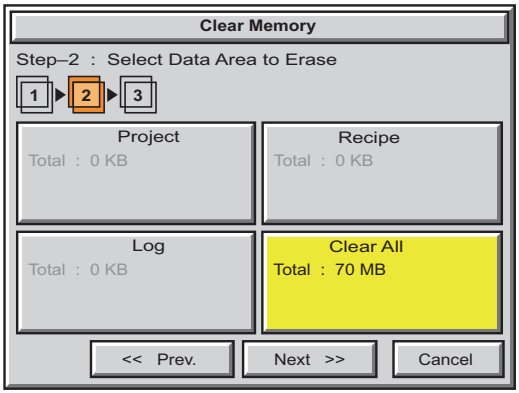

The following is an example of **Clear All** selected for clearing.

The selected device is highlighted.

The **Next >>** button is now enabled.

Pressing **Cancel** will un-select the **Clear All**.

5

Note: *If **Clear All** is selected, all files will be erased from the memory device, even those not related to the **C-more** touch panel.*

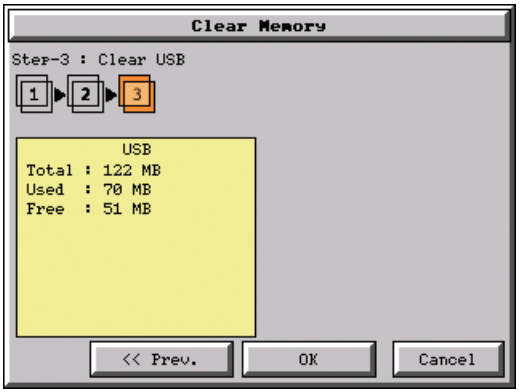

The data file(s)selected to clear are checked. If the data file is good, then the **OK** button can be pressed to start the clear procedure.

If there is a problem with the data file, the **OK** button will remain grayed out and the user can return to the previous screen by pressing the **<< Prev** button.

Press the **OK** button to continue.

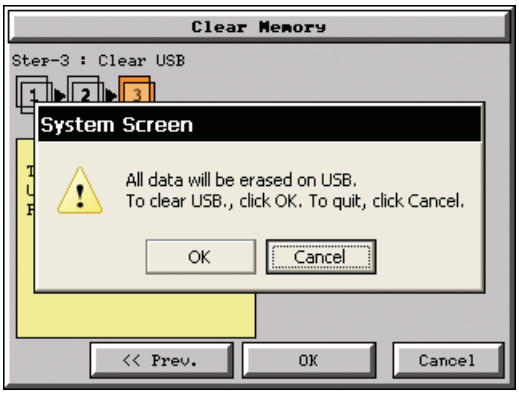

The warning message shown here will be displayed to give the user the opportunity to decide if they want to proceed or not.

Press the **OK** button to continue.

The **Clear All** process will start with a warning message as seen in the first example and continue until a message saying the device is cleared or a warning message as shown on the next page will appear.

Memory – Clear Memory (cont'd)

The warning message shown here will be displayed if the clearing process fails.

"Clear Failed".

Press the **OK** button to return to the **Clear Memory** screen and try again.

If the selected memory still fails to clear, then refer to **Chapter 8: Troubleshooting** for additional help.

Memory – Reset to Factory Default

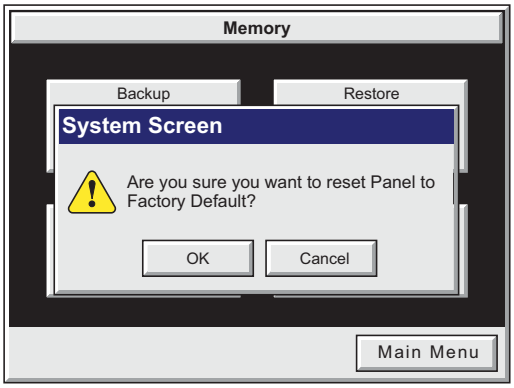

After pressing the **Reset to Factory Default** button from the **Memory Menu**, the message box shown will be displayed.

Resetting to the Factory Defaults produces the following actions:

1.) The touch screen calibration is reset to the Factory Defaults.

2.) The project file is cleared.

3.) The log, recipe & WAV files are cleared.

4.) The IP address is set to DHCP.

5

WARNING: Please make a backup file to either a CF or USB memory device using the Memory Backup function before resetting to the Factory Defaults as a precautionary measure.

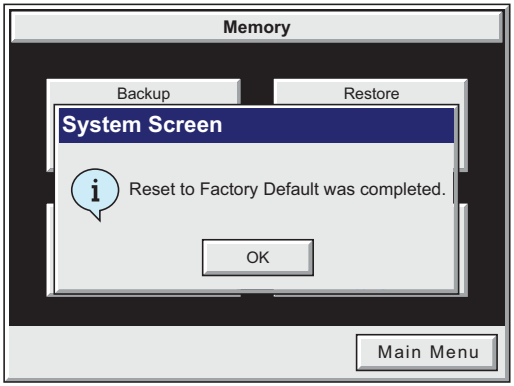

The message shown here is displayed once the **Factory Default** values have been stored into the system memory.

Press **OK** to continue.

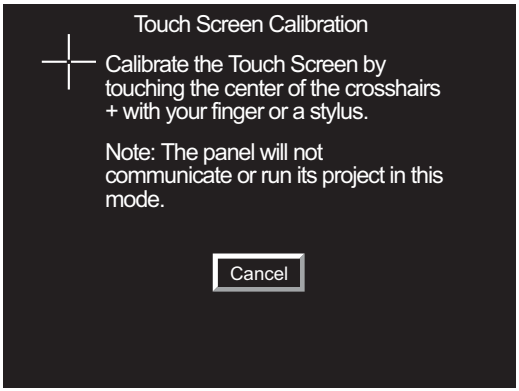

After pressing **OK**, the touch panel will reboot and startup on the **Touch Screen Calibration** procedure as shown here.

The following **note** is also shown on the calibration screens to remind the user that the **Project File** has been cleared, there's no communications with the PLC, and the calibration procedure most be performed in order to ready the panel to download a project:

Note: The panel will not communicate or run its project in this mode.

Also, the ***C-more* Programming Software** will not connect to the panel in this situation.

PLC Communications

Chapter 6

In This Chapter...

Introduction **6–2**

DirectLOGIC PLCs Password Protection **6–2**

PLC Communication Cables & Wiring Diagrams **6–5**

PLC Communication Cables & Wiring Diagrams **6–6**

AutomationDirect PLCs RS-232C Serial: 6–7

Direct LOGIC PLCs RS-422A/RS-485A: 6–10

Direct LOGIC Universal Isolated Network Adapter, p/n FA-ISOCON: 6–14

Direct LOGIC Universal Converter, p/n F2-UNICON: 6–15

RS-422A/RS-485A Multi-Drop Wiring Diagram Examples 6–16

Allen-Bradley: 6–20

GE: 6–24

GE VersaMax Micro: 6–24

Mitsubishi: 6–24

Omron: 6–26

Modicon ModBus RS-232: 6–27

Modicon Micro Series: 6–27

Modicon ModBus with RJ45: 6–27

Siemens: 6–28

Introduction

The *C-more* family of touch panels is capable of communicating with a wide variety of Programmable Logic Controllers. *C-more* is capable of communicating over RS232, RS422 and RS485 serial networks as well as Ethernet networks. It communicates with all AutomationDirect PLC's utilizing various protocols. *C-more* also communicates with other brands of PLCs by their different protocols. The table on the next page lists all of the various PLCs and protocols that can be configured. The page after the protocol table lists the various serial communication cables that are available to purchase. The rest of this chapter is devoted to show the pin to pin connections of all the available cables plus wiring diagrams that the user can refer to in order to construct their own cables, along with wiring diagrams of cables that are not available for purchase. To simplify RS422/RS485 wiring schemes, we have included wiring diagrams showing connections for available terminal connectors such as our ZIPLink Communication Adapter Module, p/n ZL-CMA15, used for example with our DL-06 and D2-260 PLCs and *C-more* D-Sub 15-pin to Terminal Block Adapter p/n EA-COMCON-3.

If you have difficulty determining whether the particular PLC and/or protocol you are using will work with the *C-more* series of touch panels, please contact our technical support group at 770-844-4200

*Direct*LOGIC PLCs Password Protection

NOTE: *Many **Direct**Logic PLCs support multi-level password protection of the ladder program. This allows password protection while not locking the communication port to an operator interface. The multilevel password can be invoked by creating a password with an upper case "A" followed by seven numeric characters (e.g. A1234567). Please refer to the specific PLC user manual for further details.*

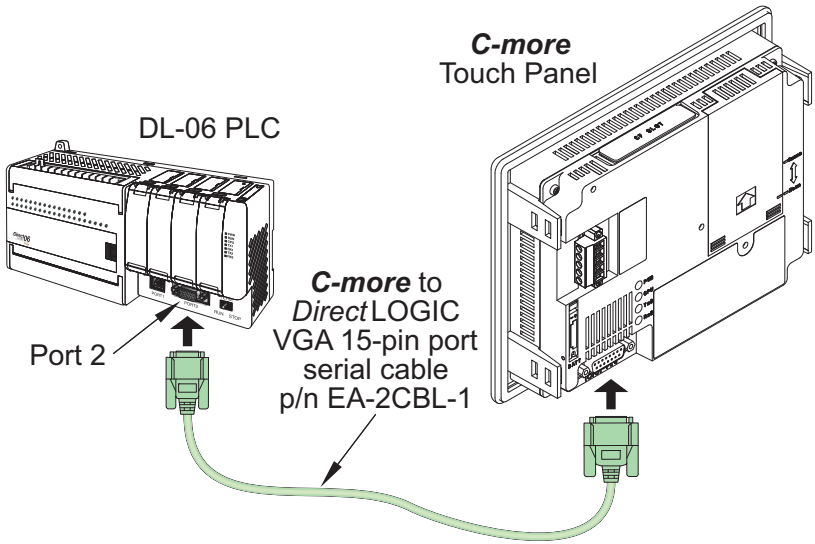

PLC Protocol & Cables

PLC Compatibility Table			
PLC Family	**Model**		**Protocols**
CLICK	all		AutomationDirect Modbus (CLICK)
AutomationDirect *Direct*LOGIC	DL05/DL06	all	K-Sequence
			*Direct*NET
			Modbus (Koyo addressing)
		H0-ECOM/H0-ECOM100	*Direct*LOGIC Ethernet
	DL105	all	K-Sequence
	DL205	D2-230	K-Sequence
		D2-240	K-Sequence
			*Direct*NET
		D2-250/D2-250-1/D2-260	K-Sequence
			*Direct*NET
			Modbus (Koyo addressing)
		D2-240/D2-250-1/D2-260 Using DCM	*Direct*NET
			Modbus (Koyo addressing)
		H2-ECOM/H2-ECOM100	*Direct*LOGIC Ethernet
	DL305	D3-330/330P (Requires the use of a Data Communications Unit)	*Direct*NET
		D3-340	*Direct*NET
		D3-350	K-Sequence
			*Direct*NET
			Modbus (Koyo addressing)
		D3-350 DCM	*Direct*NET
			Modbus (Koyo addressing)
	DL405	D4-430	K-Sequence
			*Direct*NET
		D4-440	K-Sequence
			*Direct*NET
		D4-450	K-Sequence
			*Direct*NET
			Modbus (Koyo addressing)
		All with DCM	*Direct*NET
			Modbus (Koyo addressing)
		H4-ECOM/H4-ECOM100	*Direct*LOGIC Ethernet
	H2-WinPLC (Think & Do) Live V5.2 or later and Studio any version		Think & Do Modbus RTU (serial port)
	H2-WinPLC (Think & Do) Live V5.5.1 or later and Studio V7.2.1 or later		Think & Do Modbus TCP/IP (Ethernet port)

PLC Compatibility Table continued on the next page.

PLC Protocol & Cables (cont'd)

PLC Compatibility Table (cont'd)		
PLC Family	**Model**	**Protocols**
Allen-Bradley	MicroLogix 1000, 1100, 1200, 1400, 1500, SLC 5-01/02/03, PLC5	DH485/AIC/AIC+
	MicroLogix 1000, 1100, 1200, 1400, 1500	DF1 Half Duplex; DF1 Full Duplex
	SLC 5-03/04/05	
	ControlLogix™, CompactLogix™, FlexLogix™	
	PLC-5	DF1 Full Duplex
	ControlLogix, CompactLogix, FlexLogix - Tag Based	DF1 Half Duplex; DF1 Full Duplex
	ControlLogix, CompactLogix, FlexLogix - Generic I/O Messaging	EtherNet/IP Server
	ControlLogix, CompactLogix, FlexLogix - Tag Based	EtherNet/IP Client
	MicroLogix 1100, 1400, SLC 5/05, both via native Ethernet port	
	MicroLogix 1000, 1100, 1200, 1400, 1500, SLC 5-03/04/05, all via ENI adapter	
Modbus TCP/IP	Modbus TCP/IP devices	Modbus TCP/IP
GE	90/30, 90/70. Micro 90, VersaMax Micro	SNPX
Mitsubishi	FX Series	FX Direct
	Q02, Q02H, Q06H, Q12H, Q25H	Q CPU
	Q, QnA Serial	QnA Serial
	Q, QnA Ethernet	QnA Ethernet
Omron	C200 Adapter, C500	Host Link
	CJ1/CS1 Serial	FINS
	CJ1/CS1 Ethernet	
Modicon	984 CPU, Quantum 113 CPU, AEG Modicon Micro Series 110 CPU: 311-xx, 411-xx, 512-xx, 612-xx	Modbus RTU
Siemens	S7-200 CPU, RS-485 Serial	PPI
	S7-200 CPU, S7-300 CPU; Ethernet	Ethernet ISO over TCP

PLC Communication Cables & Wiring Diagrams

Purchased Cable Description	Cable Part Number
AutomationDirect CLICK, *Direct*LOGIC PLC RJ-12 port, DL05, DL06, DL105, DL205, D3-350, D4-450 & H2-WINPLC (RS-232C)	**EA-2CBL**
*Direct*LOGIC (VGA Style) 15-pin port DL06, D2-250 (250-1), D2-260 (RS-232C)	**EA-2CBL-1**
*Direct*LOGIC PLC RJ-11 port, D3-340 (RS-232C)	**EA-3CBL**
*Direct*LOGIC DL405 PLC 15-pin D-sub port, DL405 (RS-232C)	**EA-4CBL-1**
*Direct*LOGIC PLC 25-pin D-sub port, DL405, D3-350, DL305 DCU and all DCM's (RS-232C)	**EA-4CBL-2**
Allen-Bradley MicroLogix 1000, 1100, 1200, 1400, 1500 (RS-232C)	**EA-MLOGIX-CBL**
Allen-Bradley SLC 5-03/04/05, ControlLogix, CompactLogix, FlexLogix DF1 port (RS-232C)	**EA-SLC-232-CBL**
Allen-Bradley PLC-5 DF1 port (RS-232C)	**EA-PLC5-232-CBL**
Allen-Bradley MicroLogix, SLC 5-01/02/03, PLC5 DH485 port (RS-232C)	**EA-DH485-CBL**
GE 90/30, 90/70, Micro 90, VersaMax Micro 15-pin D-sub port (RS-422A)	**EA-90-30-CBL**
MITSUBISHI FX Series 25-pin port (RS-422A)	**EA-MITSU-CBL**
MITSUBISHI FX Series 8-pin mini-DIN (RS-422A)	**EA-MITSU-CBL-1**
OMRON Host Link C200 Adapter, C500 (RS-232C)	**EA-OMRON-CBL**

Part No. EA-2CBL

Part No. EA-2CBL-1

Part No. EA-3CBL

6

NOTE 1: *The above list of pre-made communications cables may be purchased. See further in this chapter for wiring diagrams of additonal* ***user constructed cables****. This chapter also includes wiring diagrams for the pre-made cables.*

NOTE 2: *EZTouch serial PLC communication cables are compatible with* ***C-more*** *touch panels.*

C-more PLC Serial Communications Port

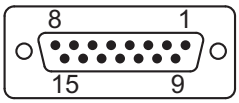

D-Sub 15-pin female on rear of touch panel

PLC Communication Cables & Wiring Diagrams

Part No. EA-4CBL-1

Part No. EA-4CBL-1

Part No. EA-MLOGIX-CBL

Part No. EA-SLC-232-CBL

Part No. EA-PLC5-232-CBL

Part No. EA-DH485-CBL

Part No. EA-90-30-CBL

Part No. EA-MITSU-CBL

Part No. EA-MITSU-CBL-1

Part No. EA-OMRON-CBL

PLC Communication Cables & Wiring Diagrams (cont'd)

The following series of wiring diagrams show the connectors and wiring details for the communication cables that are used between the *C-more* touch panels and various PLC controllers. Part numbers are included with the **pre-made cables** that can be purchased from *AutomationDirect*. The information presented will allow the user to construct their own cables if so desired.

AutomationDirect PLCs RS-232C Serial: *EA-2CBL*

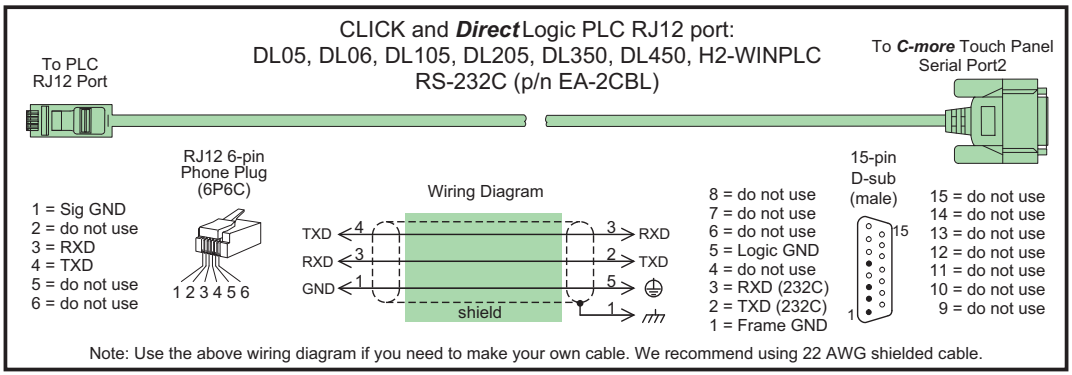

EA-2CBL-1

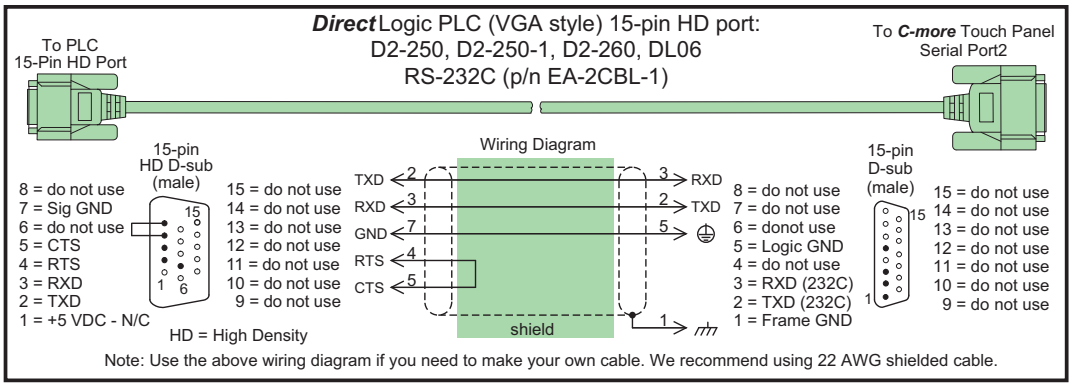

AutomationDirect PLCs RS-232C Serial (cont'd):

EA-3CBL

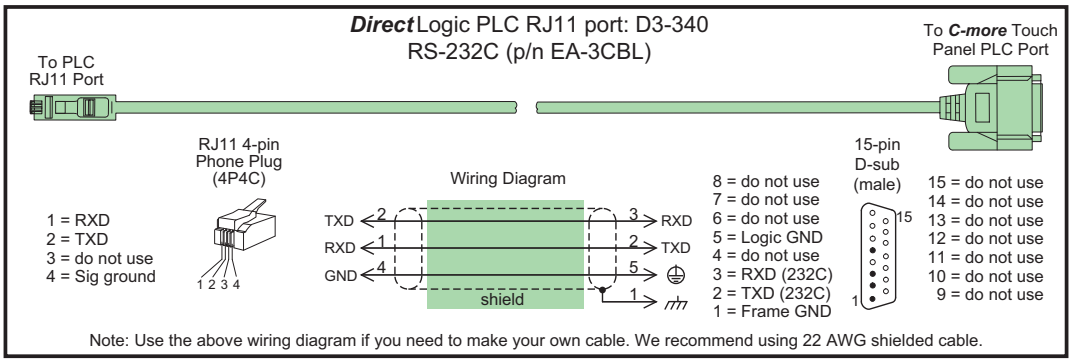

Note: Use the above wiring diagram if you need to make your own cable. We recommend using 22 AWG shielded cable.

6

AutomationDirect PLCs RS-232C Serial (cont'd):

EA-4CBL-1

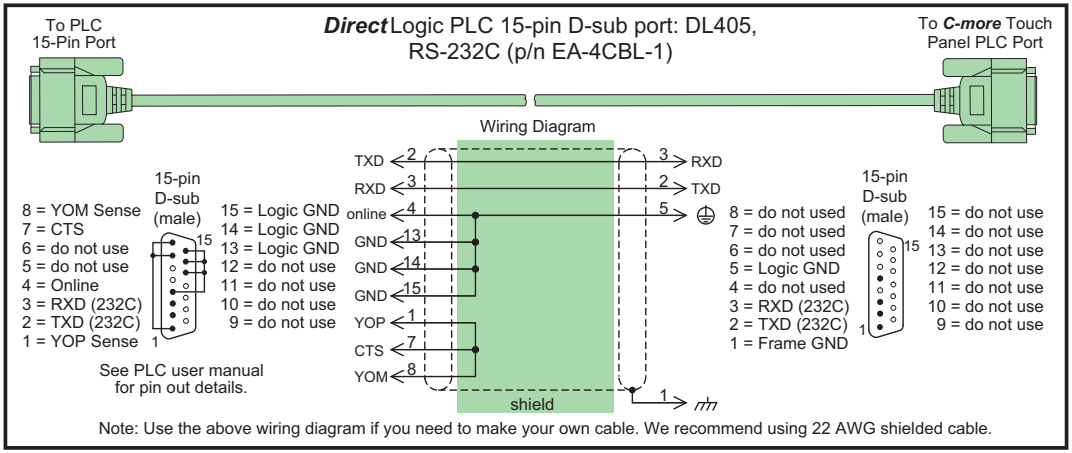

Note: Use the above wiring diagram if you need to make your own cable. We recommend using 22 AWG shielded cable.

EA-4CBL-2

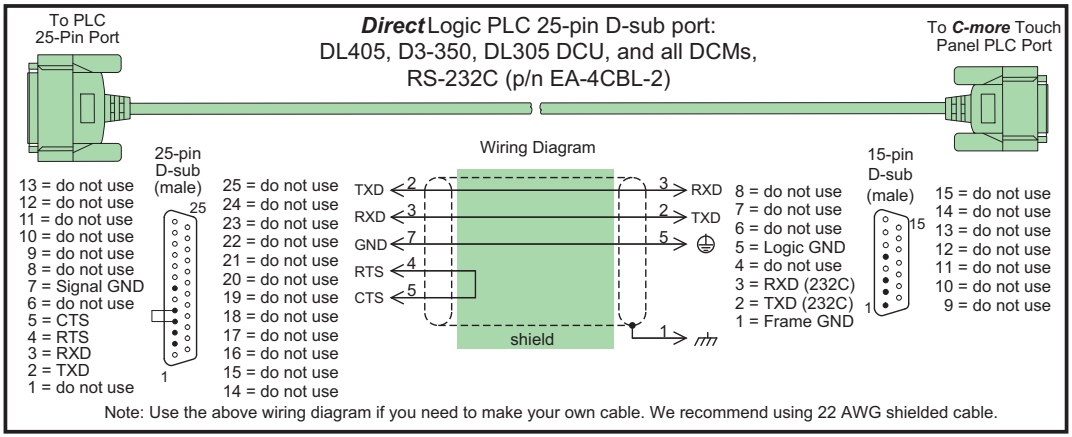

Note: Use the above wiring diagram if you need to make your own cable. We recommend using 22 AWG shielded cable.

Direct LOGIC PLCs RS-422A/RS-485A:

When using the RS-422A/RS-485A capabilities of the *C-more* PLC communications port, the termination resistor is placed between the **RXD–** and **RXD+** terminals on the PLC side of the connection between the touch panel and PLC. The Termination Resistor value is based on the characteristic impedance of the cable being used. To enable the built-in 120 Ohm Termination Resistor, jumper pin **13** to pin **9** (**RXD+**) on the *C-more* 15-pin PLC communications port.

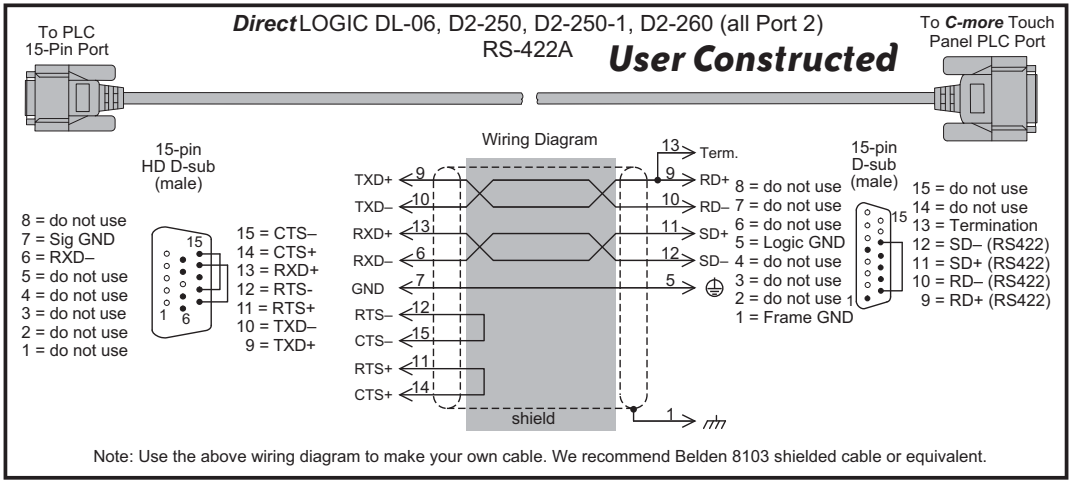

Note: Use the above wiring diagram to make your own cable. We recommend Belden 8103 shielded cable or equivalent.

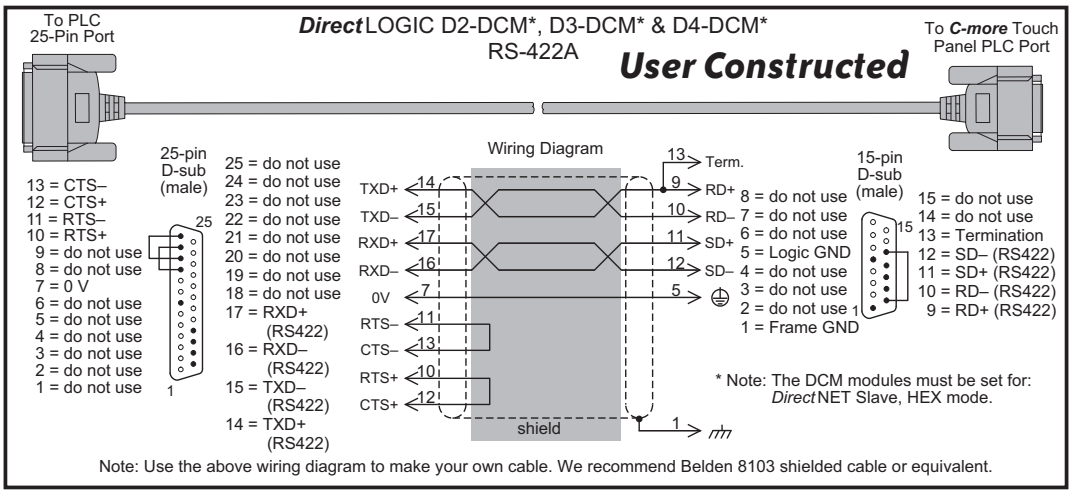

Note: Use the above wiring diagram to make your own cable. We recommend Belden 8103 shielded cable or equivalent.

NOTE: *The RS-422 wiring diagrams shown above are not for multi-drop networks involving connecting more than one PLC to a panel. Refer to the wiring diagram example on page 6-16 if more than one PLC will be connected to a panel.*

Direct LOGIC PLCs RS-422A/RS-485A (cont'd):

User Constructed

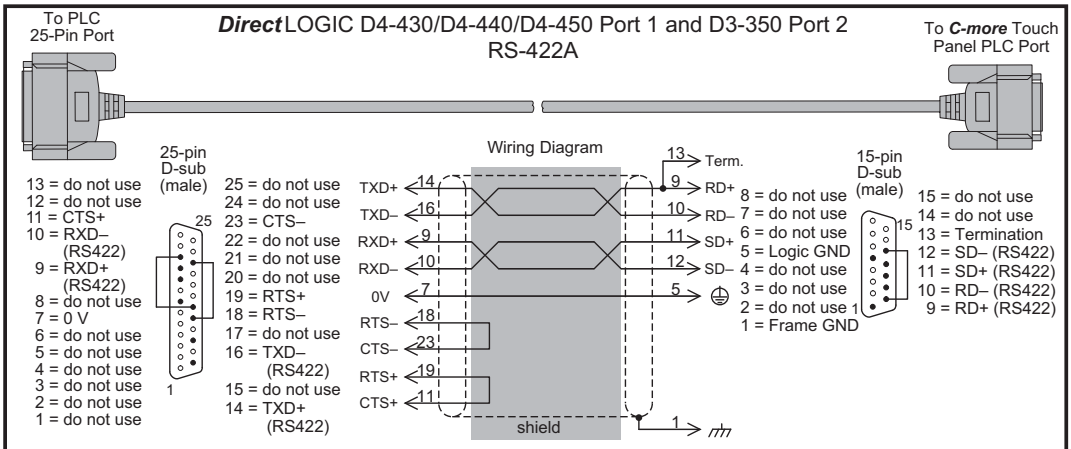

Note: Use the above wiring diagram to make your own cable. We recommend Belden 8103 shielded cable or equivalent.

User Constructed

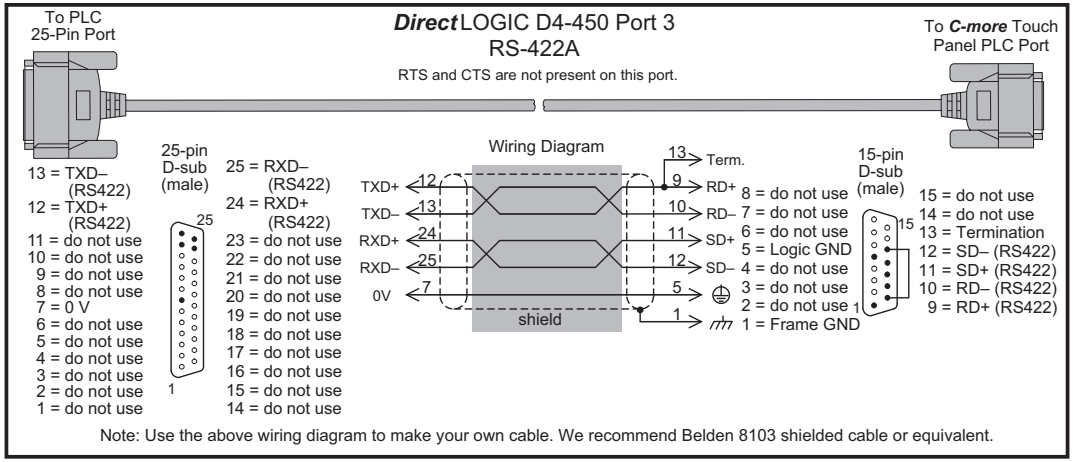

Note: Use the above wiring diagram to make your own cable. We recommend Belden 8103 shielded cable or equivalent.

NOTE: *The RS-422 wiring diagrams shown above are not for multi-drop networks involving connecting more than one PLC to a panel. Refer to the wiring diagram example on page 6-16 if more than one PLC will be connected to a panel.*

Direct LOGIC PLCs RS-422A/RS-485A (cont'd):

User Constructed

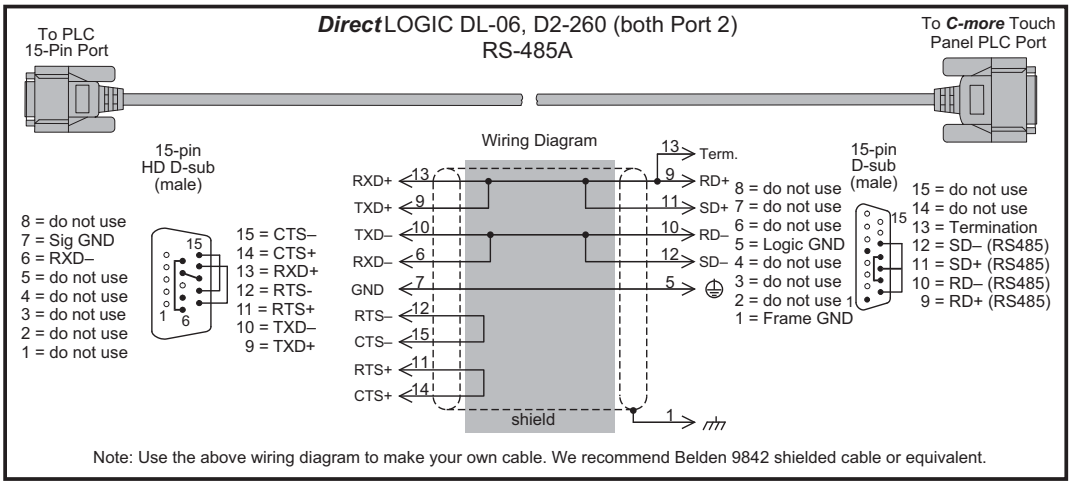

Note: Use the above wiring diagram to make your own cable. We recommend Belden 9842 shielded cable or equivalent.

NOTE: *The RS-485 wiring diagram shown above is not for multi-drop networks involving connecting more than one PLC to a panel. Refer to the wiring diagram example on page 6-16 if more than one PLC will be connected to a panel.*

Direct LOGIC PLCs RS-422A/RS-485A (cont'd):

***Direct* LOGIC** ZIPLink ZL-CMA15L Adapter Module to EA-COMCON-3 Terminal Block Adapter
RS-485A PLC D2-260 or DL06 only Port 2

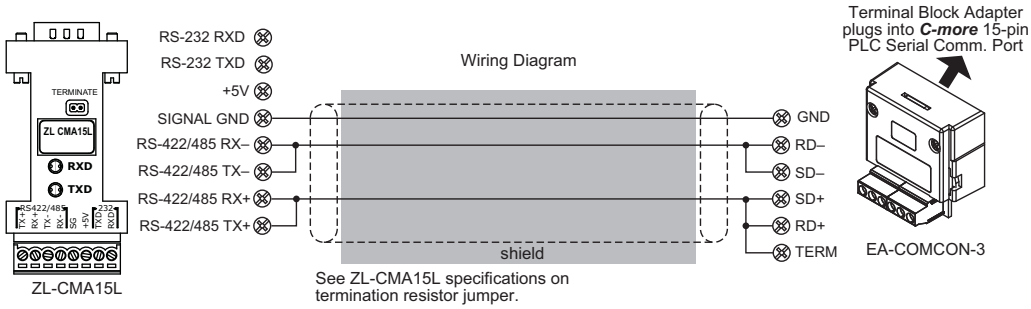

Note: Use the above wiring diagram to make your own cable. We recommend Belden 8103 shielded cable or equivalent.

***Direct* LOGIC** ZIPLink ZL-CMA15L Adapter Module to EA-COMCON-3 Terminal Block Adapter
RS-422A PLC D2-250 (-1), D2-260 or DL06 Port 2

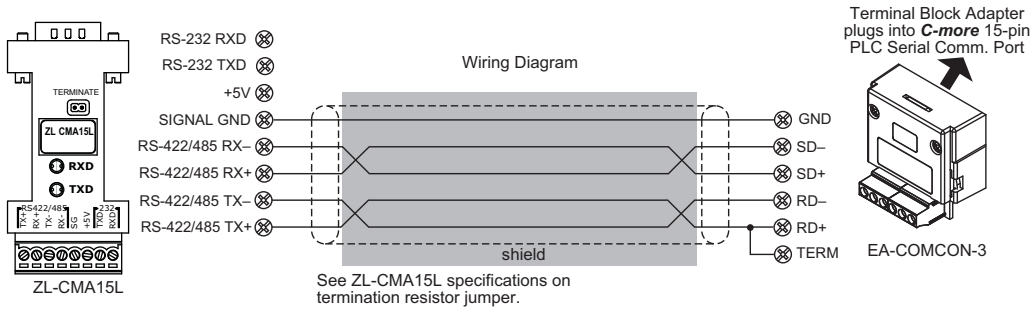

Note: Use the above wiring diagram to make your own cable. We recommend Belden 9842 shielded cable or equivalent.

NOTE: *The RS-422 and RS-485 wiring diagrams shown above are not for multi-drop networks involving connecting more than one PLC to a panel. Refer to the wiring diagram examples starting on page 6-14 if more than one PLC will be connected to a panel.*

Direct LOGIC Universal Isolated Network Adapter, p/n FA-ISOCON:

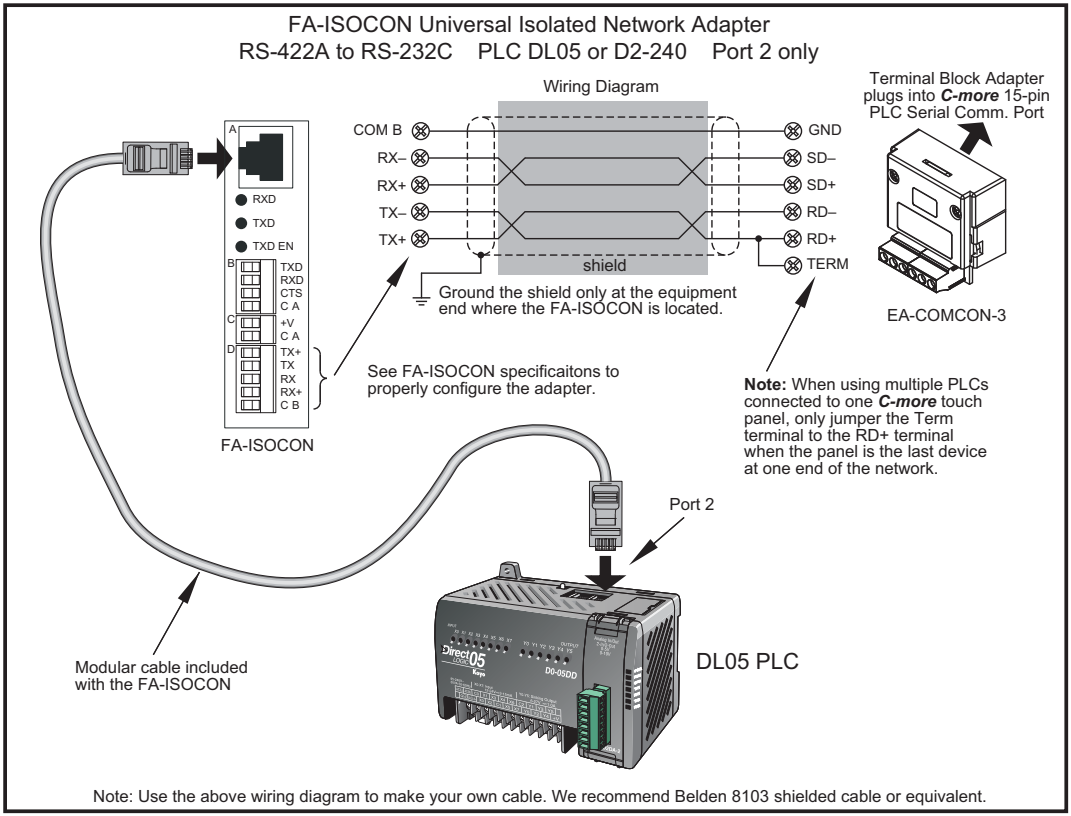

Note: Use the above wiring diagram to make your own cable. We recommend Belden 8103 shielded cable or equivalent.

Direct LOGIC Universal Converter, p/n F2-UNICON:

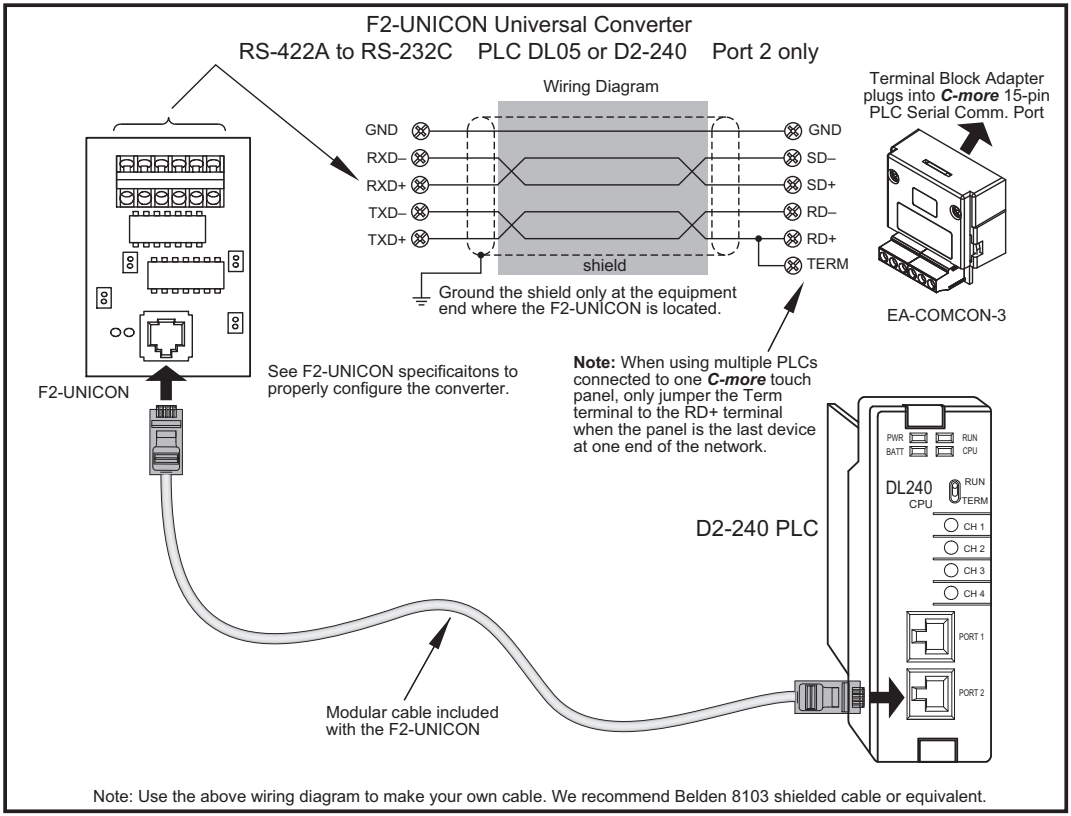

Note: Use the above wiring diagram to make your own cable. We recommend Belden 8103 shielded cable or equivalent.

6

RS-422A/RS-485A Multi-Drop Wiring Diagram Examples

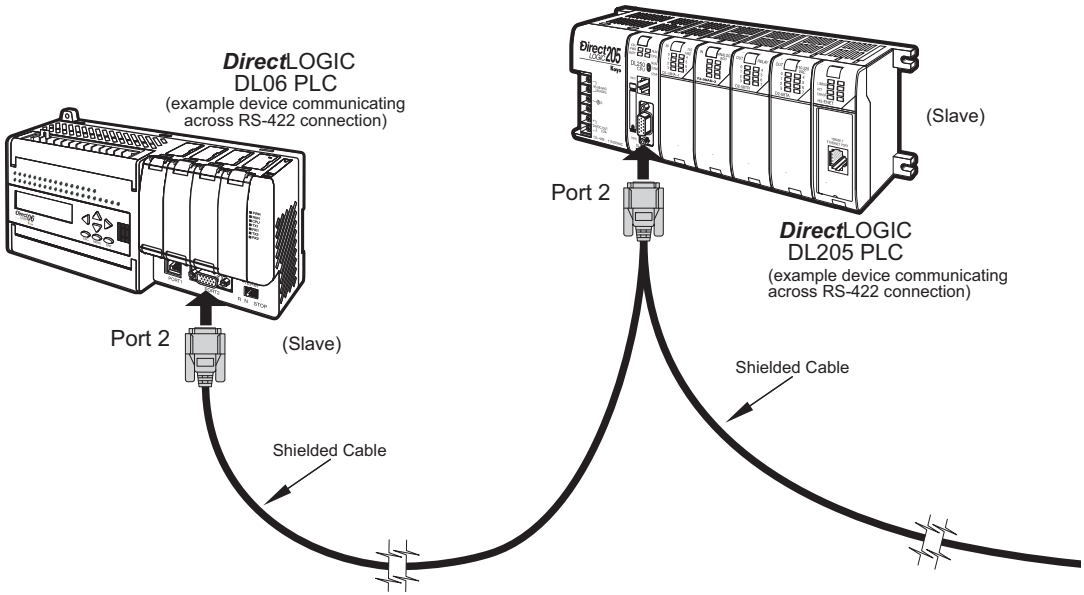

Note: We recommend Belden 8103 shielded cable or equivalent.

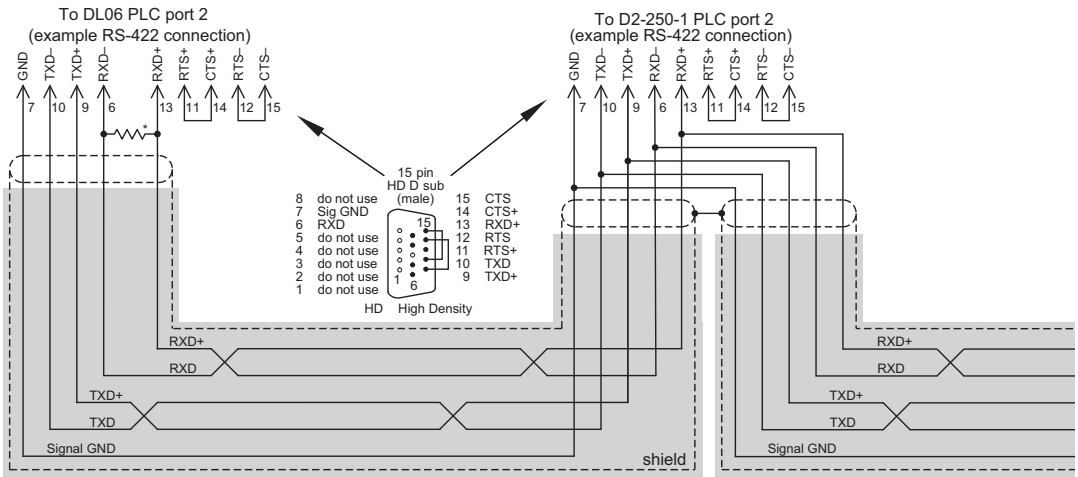

* Termination resistors required at both ends of the network receive data signals to match the impedance of the cable (between 100 and 500 ohms)

Typical RS-422 Multi-Drop Wiring Diagram

RS-422A/RS-485A Multi-Drop Wiring Diagram Examples (cont'd)

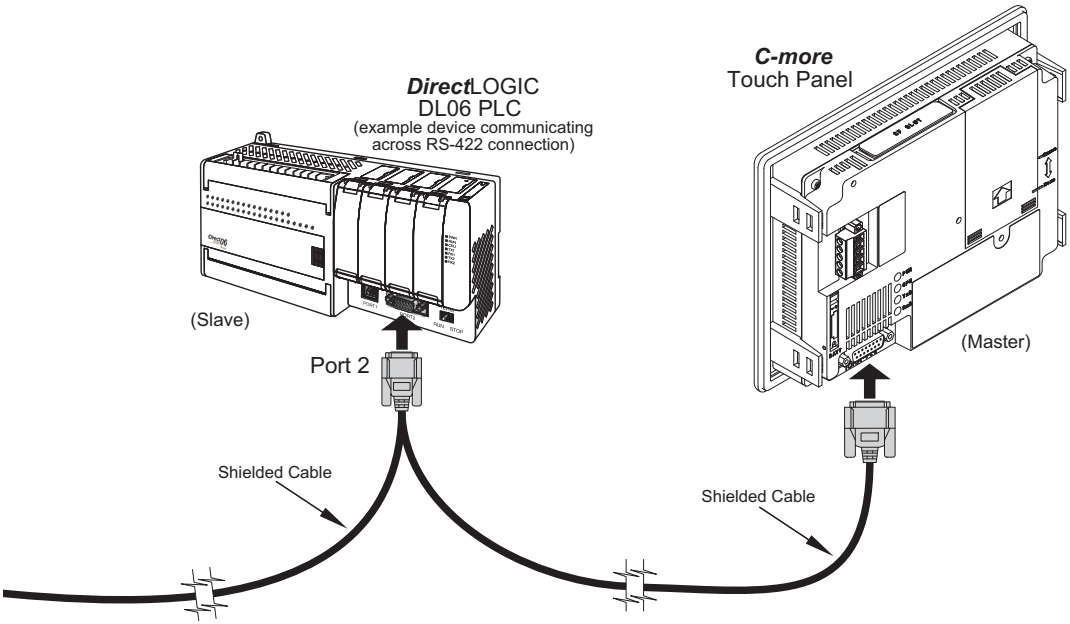

Note: We recommend Belden 8103 shielded cable or equivalent.

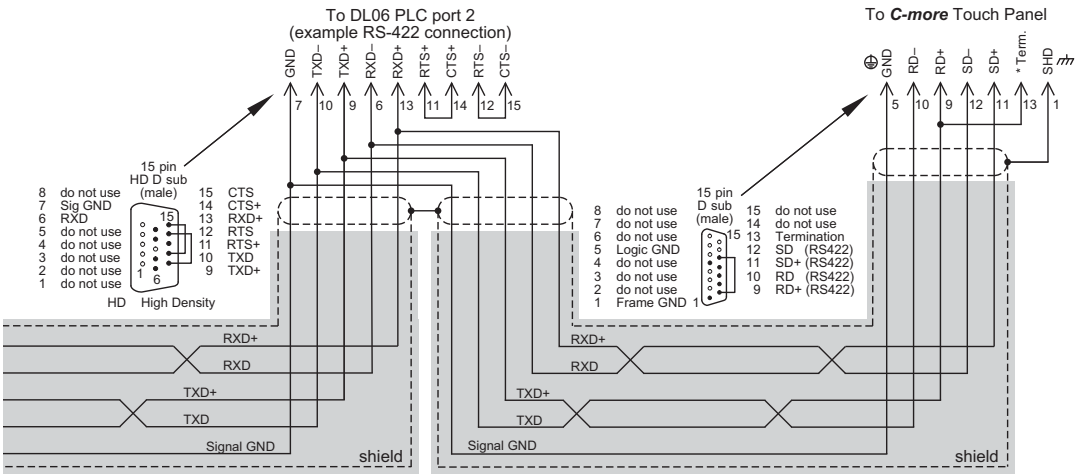

Typical RS-422 Multi-Drop Wiring Diagram (cont'd)

* Termination resistors required at both ends of the network receive data signals to match the impedance of the cable (between 100 and 500 ohms) Jumper pin 13 to 9 on the ***C-more*** Touch Panel 15 pin connector to place the 120Ω internal resistor into the network If the cable impedance is different, then use an external resistor matched to the cable impedance

RS-422A/RS-485A Multi-Drop Wiring Diagram Examples (cont'd)

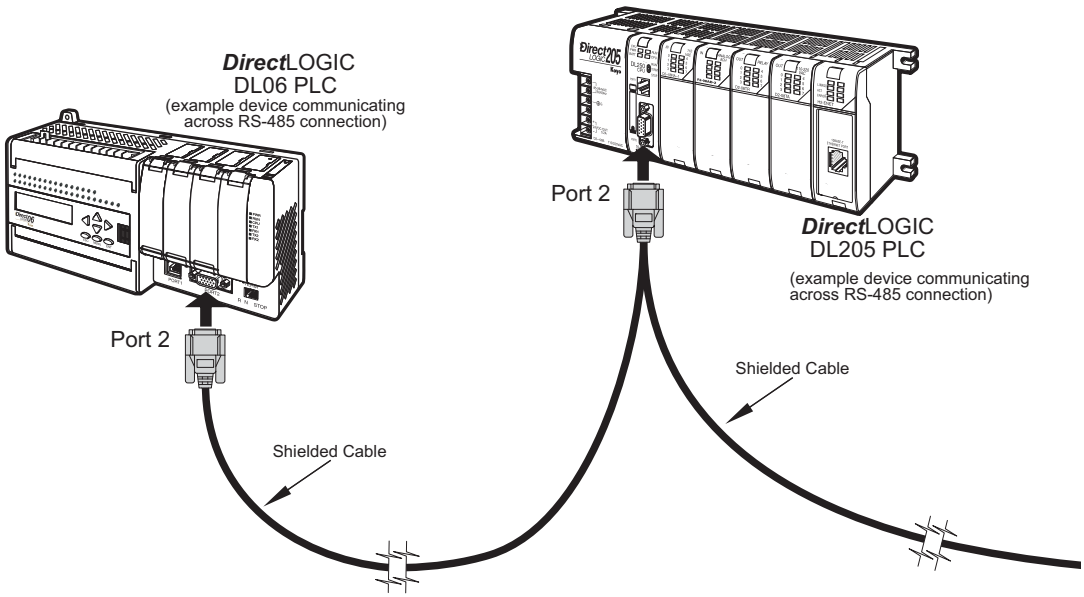

Note: We recommend Belden 88102 shielded cable or equivalent.

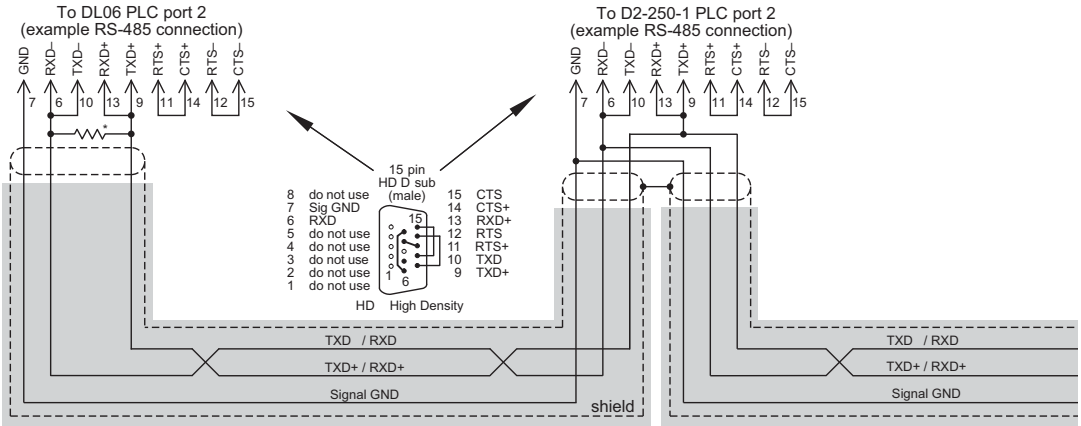

* Termination resistors required at both ends of the network to match the impedance of the cable (between 100 and 500 ohms)

Typical RS-485 Multi-Drop Wiring Diagram

RS-422A/RS-485A Multi-Drop Wiring Diagram Examples (cont'd)

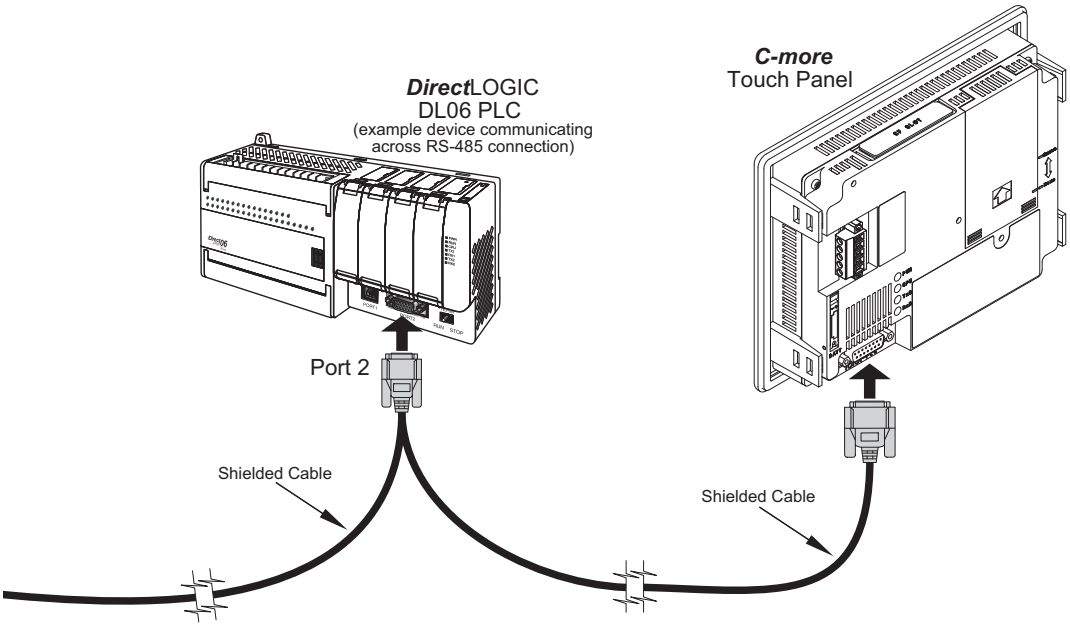

Note: We recommend Belden 88102 shielded cable or equivalent.

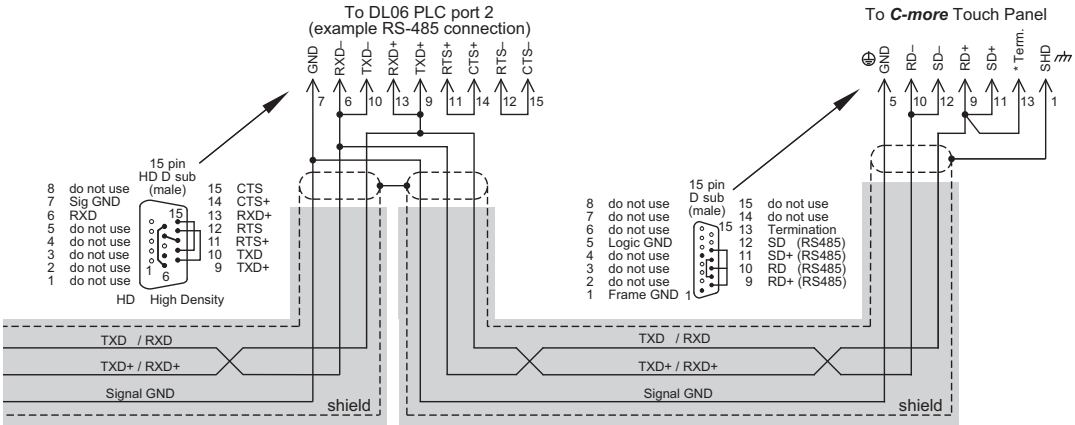

Typical RS-485 Multi-Drop Wiring Diagram (cont'd)

* Termination resistors required at both ends of the network receive data signals to match the impedance of the cable (between 100 and 500 ohms) Jumper pin 13 to 9 on the ***C-more*** touch panel 15 pin connector to place the 120Ω internal resistor into the network If the cable impedance is different, then use an external resistor matched to the cable impedance

Allen-Bradley:

EA-MLOGIX-CBL

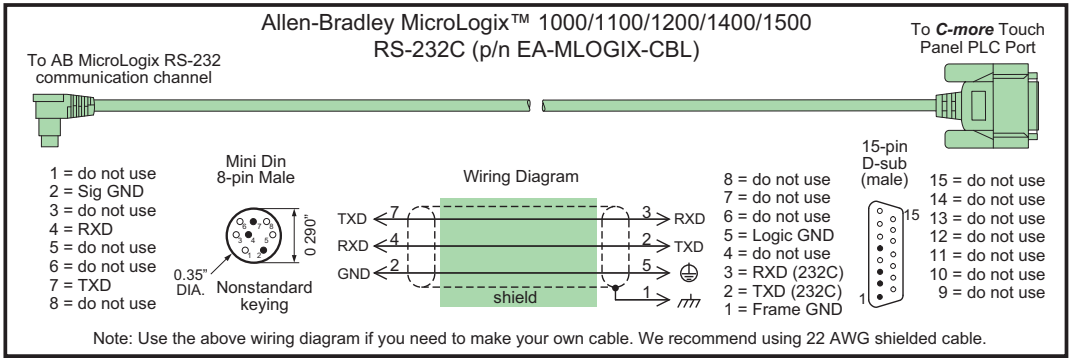

Note: Use the above wiring diagram if you need to make your own cable. We recommend using 22 AWG shielded cable.

EA-SLC-232-CBL

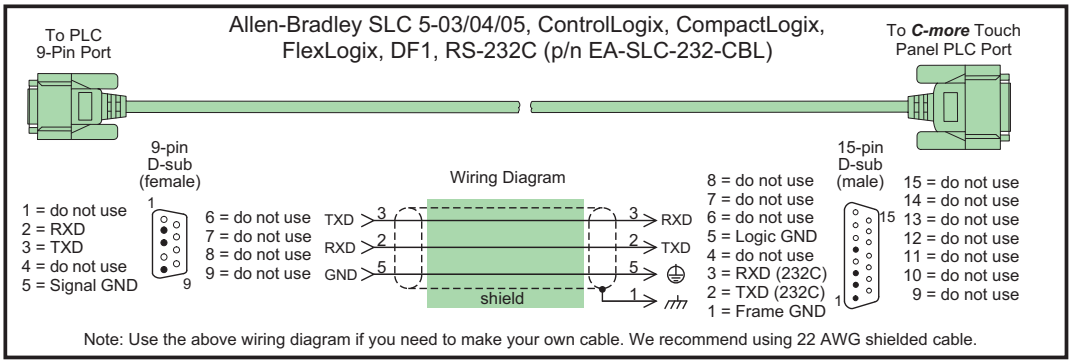

Note: Use the above wiring diagram if you need to make your own cable. We recommend using 22 AWG shielded cable.

EA-PLC5-232-CBL

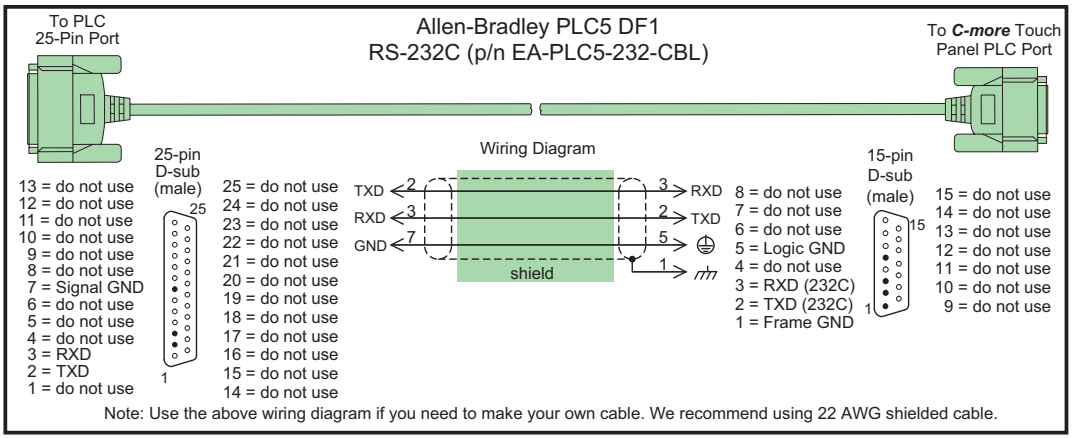

Note: Use the above wiring diagram if you need to make your own cable. We recommend using 22 AWG shielded cable.

Allen-Bradley (cont'd): EA-DH485-CBL

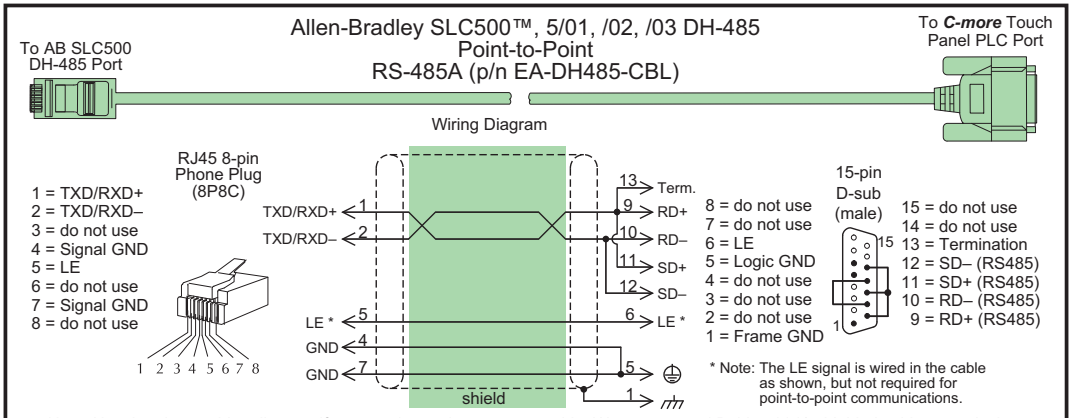

Note: Use the above wiring diagram if you need to make your own cable. We recommend Belden 9842 shielded cable or equivalent.

Allen Bradley SLC500™, 5/01, /02, /03 DH 485/AIC to Multiple ***C-more*** Touch Panels
RS 485A (using ***C-more*** cable p/n EA DH485 CBL)

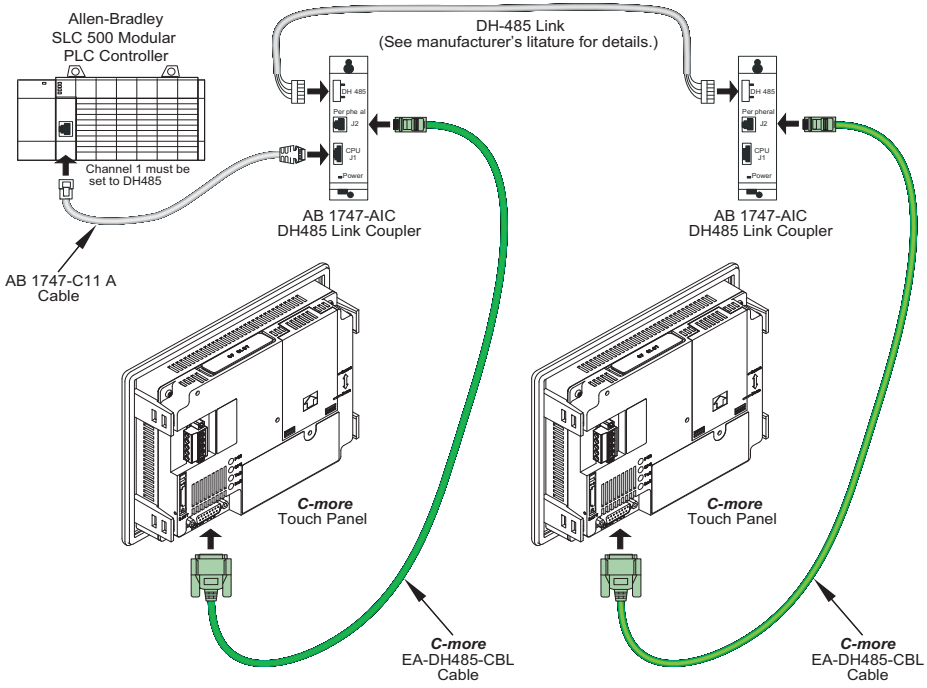

Note: The above diagram shows connecting multiple ***C-more*** touch panels to an Allen-Bradley DH485/AIC network using the AB DH485 Link Coupler, p/n 1747-AIC. Select the "Allen-Bradly DH485/AIC SLC500 MircroLogix" driver in the ***C-more*** Programming Software when starting the project. Also, set the AB channel configuration for DH485.

Allen-Bradley (cont'd):

Allen Bradley SLC500™ 5/03 DH 485/AIC to Multiple ***C-more*** Touch Panels
(using ***C-more*** cables p/n EA MLOGIX CBL, EA SLC 232 CBL)

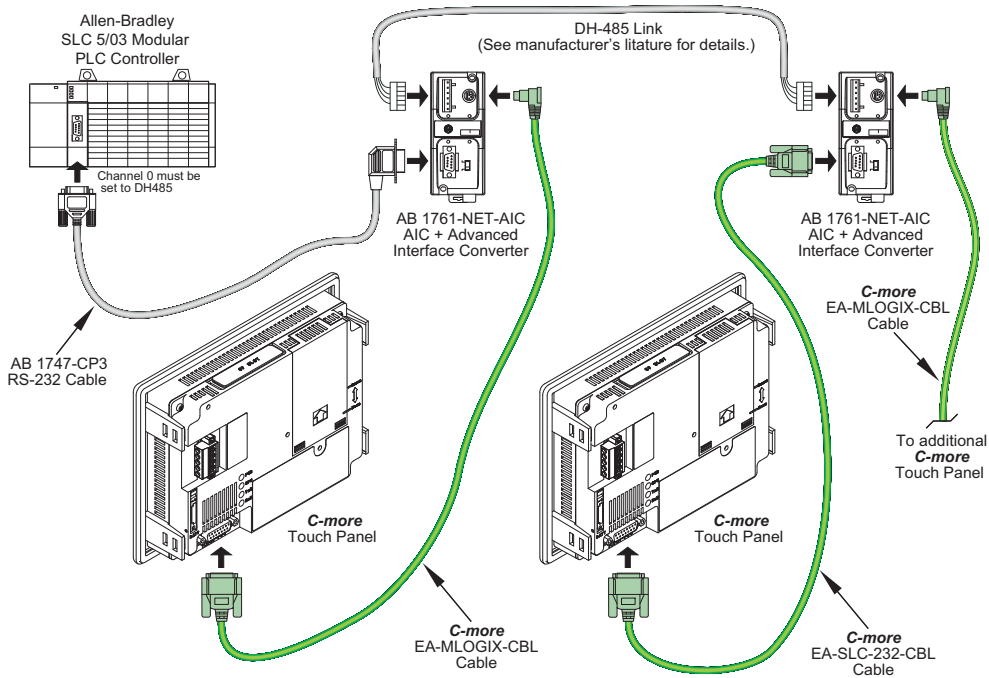

Note: The above diagram shows connecting multiple ***C-more*** touch panels to an Allen-Bradley DH485/AIC network using the AB AIC+ Advanced Interface Converter, p/n 1761-NET-AIC. Select the "Allen-Bradly DH485/AIC SLC500 MircroLogix" driver in the ***C-more*** Programming Software when starting the project. Also, set the AB channel configuration for DH485.

Allen-Bradley (cont'd):

Multiple Allen Bradley PLCs connected to multiple ***C-more*** Touch Panels
(using AB Ethernet Network Interface p/n 761 NET ENI with EtherNet/IP protocol)

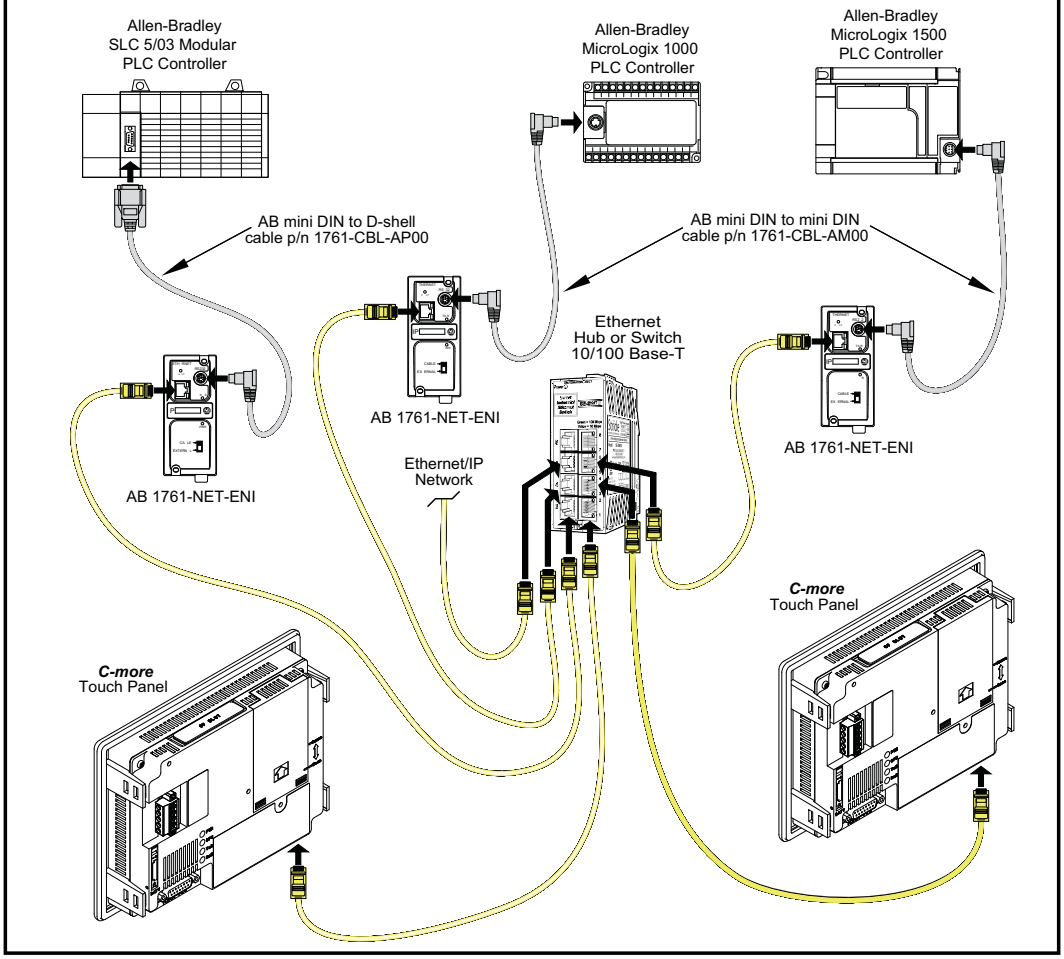

6

GE: EA-90-30-CBL

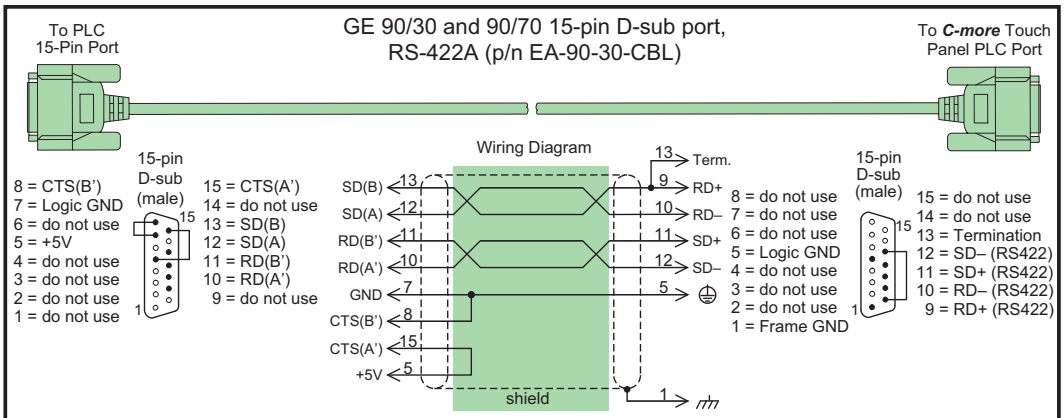

Note: Use the above wiring diagram if you need to make your own cable. We recommend Belden 8103 shielded cable or equivalent.

GE VersaMax Micro: User Constructed

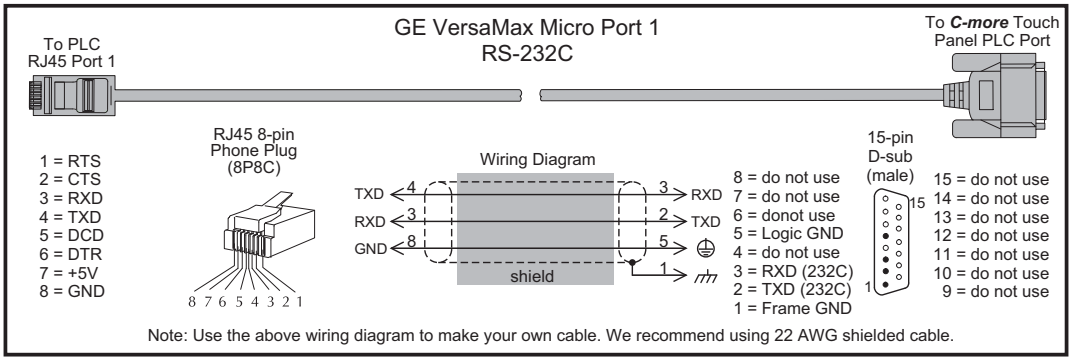

Note: Use the above wiring diagram to make your own cable. We recommend using 22 AWG shielded cable.

Mitsubishi: EA-MITSU-CBL

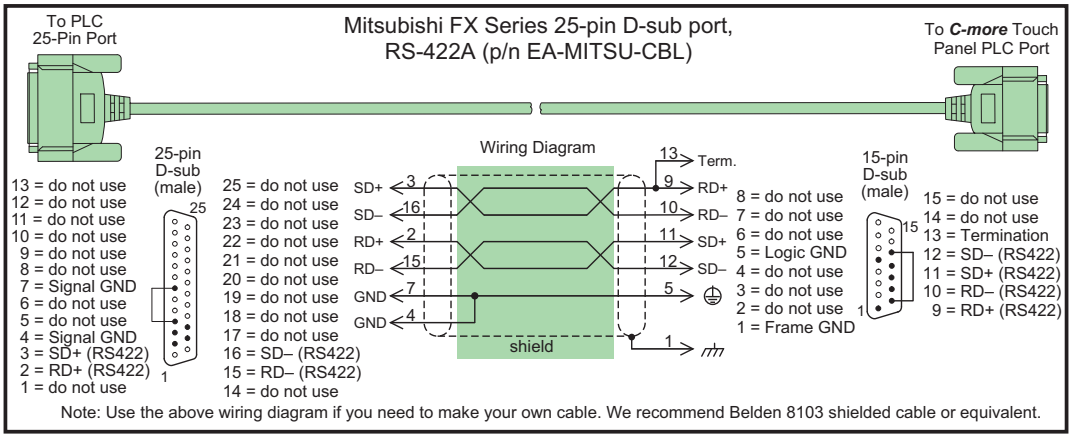

Note: Use the above wiring diagram if you need to make your own cable. We recommend Belden 8103 shielded cable or equivalent.

Mitsubishi(cont'd):

EA-MITSU-CBL-1

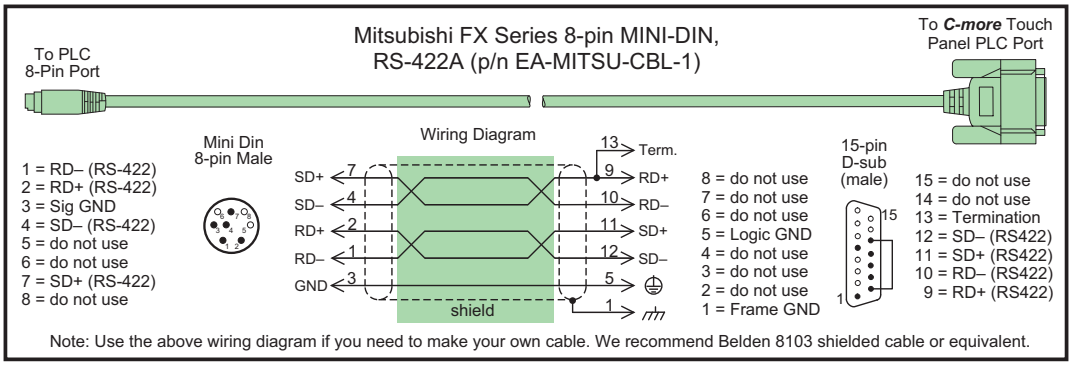

Note: Use the above wiring diagram if you need to make your own cable. We recommend Belden 8103 shielded cable or equivalent.

User Constructed

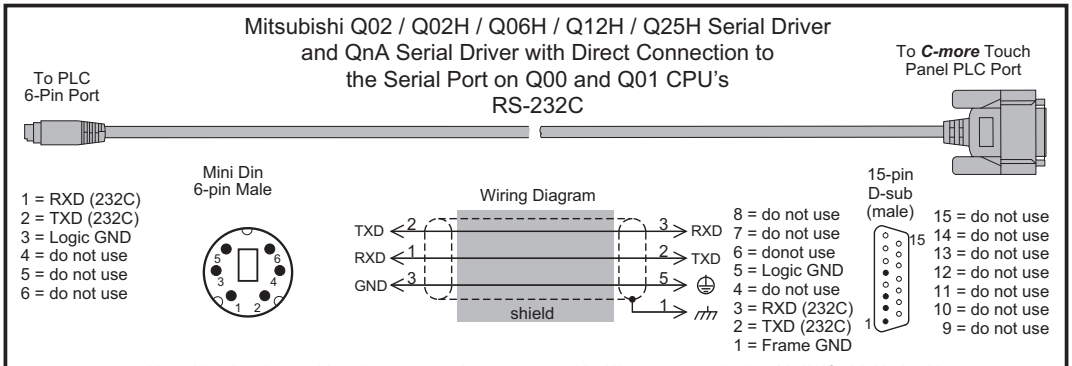

Note: Use the above wiring diagram to make your own cable. We recommend using 22 AWG shielded cable.

User Constructed

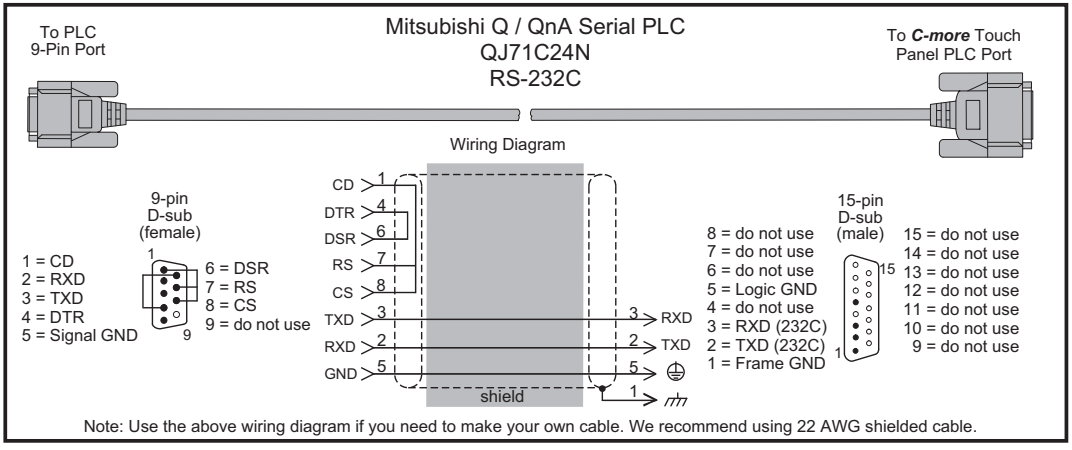

Note: Use the above wiring diagram if you need to make your own cable. We recommend using 22 AWG shielded cable.

Omron:

EA-OMRON-CBL

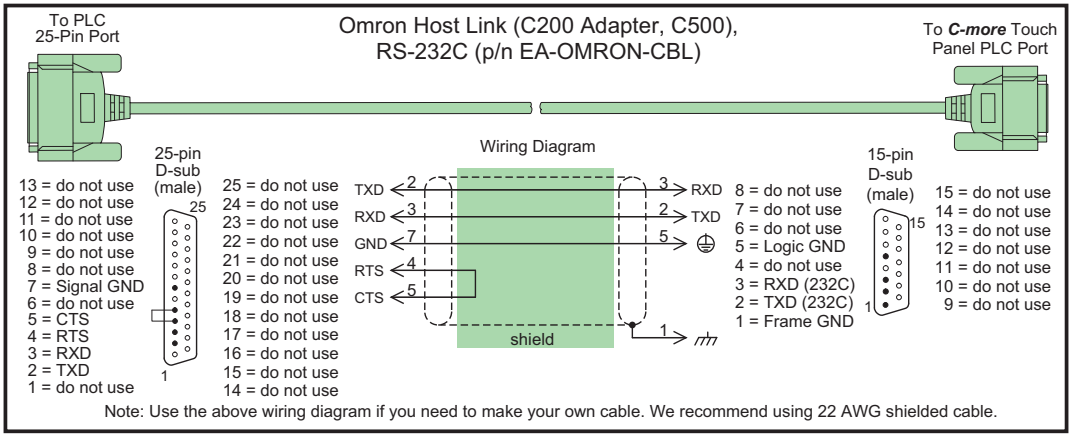

Note: Use the above wiring diagram if you need to make your own cable. We recommend using 22 AWG shielded cable.

User Constructed

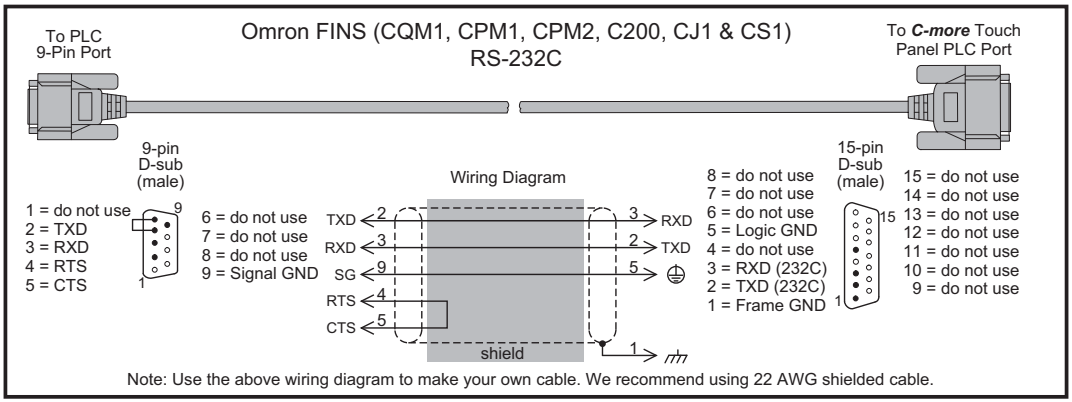

Note: Use the above wiring diagram to make your own cable. We recommend using 22 AWG shielded cable.

User Constructed

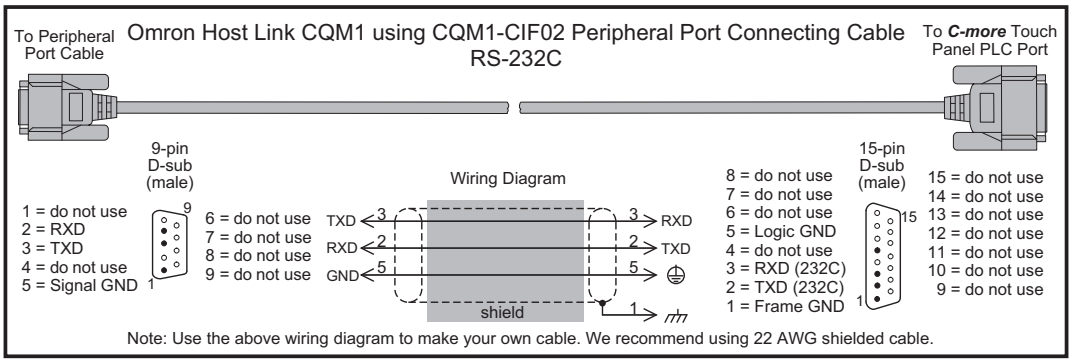

Note: Use the above wiring diagram to make your own cable. We recommend using 22 AWG shielded cable.

Modicon ModBus RS-232:

User Constructed

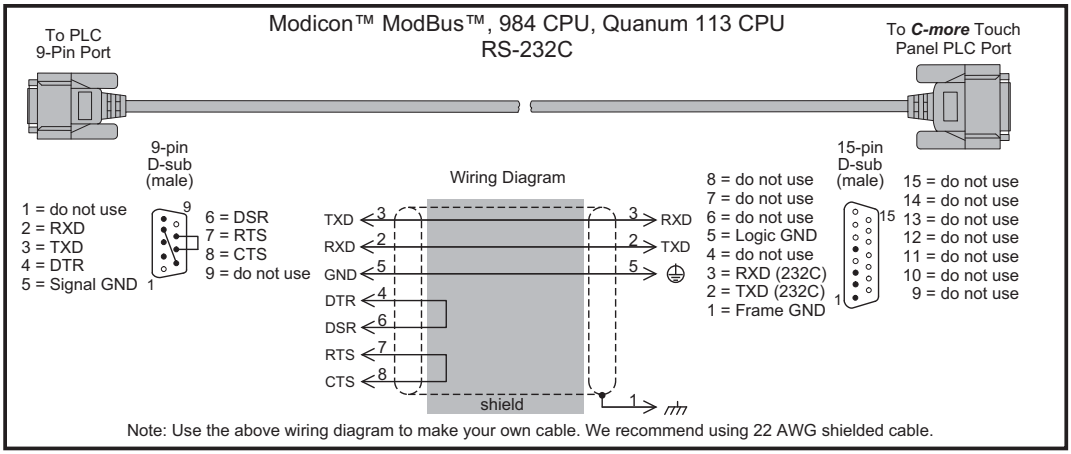

Note: Use the above wiring diagram to make your own cable. We recommend using 22 AWG shielded cable.

Modicon Micro Series:

User Constructed

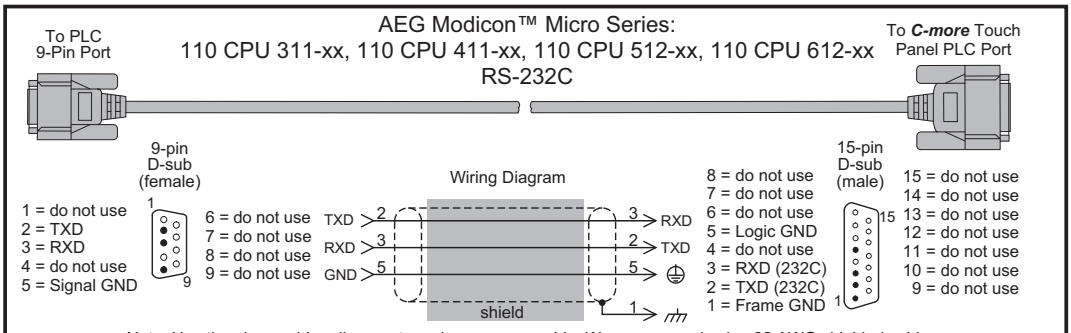

Note: Use the above wiring diagram to make your own cable. We recommend using 22 AWG shielded cable.

Modicon ModBus with RJ45:

User Constructed

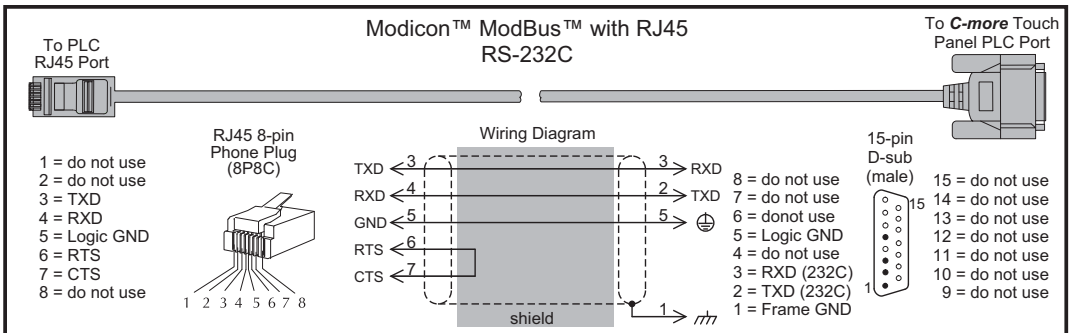

Note: Use the above wiring diagram to make your own cable. We recommend using 22 AWG shielded cable.

Siemens:

User Constructed

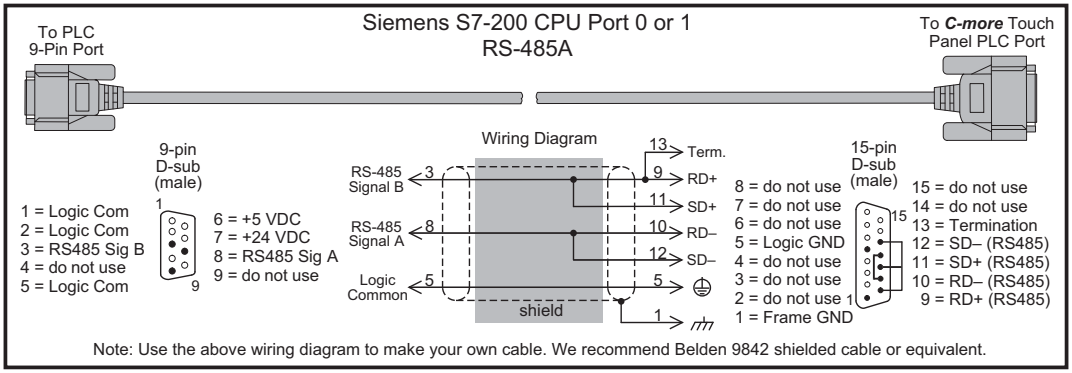

Note: Use the above wiring diagram to make your own cable. We recommend Belden 9842 shielded cable or equivalent.

6

Maintenance

Chapter 7

In This Chapter...

Project Backup 7–2
Check Operating Environment 7–2
Check Operating Voltage 7–2
Check Status Indicators 7–2
Check Physical Conditions 7–3
Run Tests under System Setup Screens 7–3
Check Memory Usage via System Setup Screens 7–4
Check/Adjust Display Brightness or Contrast 7–4
Check Error Log via System Setup Screens 7–4
Adjust Touch Panel via System Setup Screens 7–4
Replace Battery Periodically 7–5
Cleaning the Display Screen 7–5
Check Project Functionality 7–6
Checks from *C-more* Programming Software 7–6

Maintenance

Although the *C-more* touch panels require very little maintenance, setting up a routine maintenance schedule will insure the longevity of the product in your application.

The following are some suggestions of items to include in a preventive maintenance list or schedule. Most of these items should be scheduled quarterly or bi-annually.

Project Backup

- During a routine preventive maintenance schedule is a good time to make sure that there is an up-to-date backup of the application project. Although the *C-more* touch panel with its programming software has the ability to upload the complete project from a panel through the programming software, insurance is warranted just in case the worse case scenario happens and the entire touch panel is destroyed.

Check Operating Environment

- Make sure the touch panel is operating in the proper temperature range: (0 to 50 °C (32 to 122 °F)).
- Make sure the touch panel is operating within the specified humidity range: (10–85% RH, non-condensing).
- Make sure the operating environment is free of corrosive gasses.

Check Operating Voltage

- Check the input voltage that is powering the touch panel to make sure it is within the appropriate range.

DC: If the panel is being powered with a DC power source, then the acceptable range is 20.4 to 28.8 VDC. (24 VDC, -15%, +20%, minimum of 1.5 A)

AC: If the panel is being powered from an AC/DC Power Adapter, EA-AC, then the acceptable input voltage range to the adapter is 100-240 VAC, 50/60 Hertz.

Check Status Indicators

- During a routine maintenance check is a good time to take a quick look at the status indicators on the rear of the touch panel. The Power LED (PWR) indicator should be on and there should be activity on the TxD and RxD LED indicators when connected serially to a PLC or control device. Check the status of the CPU LED and compare it to the chart shown in the illustration below. Any indication of the CPU LED other than a solid green shows there is a possible problem, and the condition needs to be corrected.

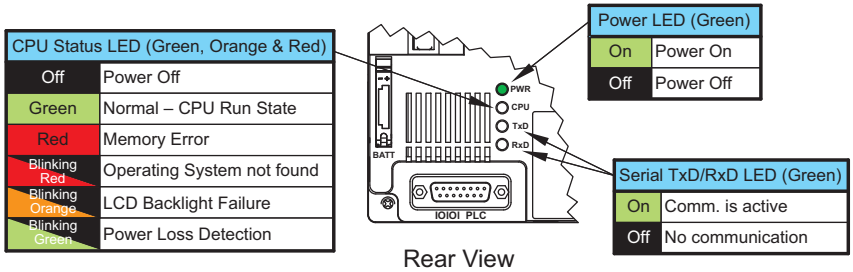

Check Physical Conditions

- Make sure that harmful chemicals are not being used around the panel. Look for any deterioration of the touch panel's bezel and front display area. See **Chapter 2: Specifications** for a chemical compatibility list.
- Check the mounting gasket to make sure it is sealing properly and has not deteriorated. Replace the mounting gasket if there are any signs of deterioration, or if there is any evidence that moisture/liquids have penetrated to the inside of the enclosure where the panel is mounted. Information on a replacement gaskets can be found in **Chapter 9: Replacement Parts**.

- Check to make sure that none of the cooling vents around the inside section of the touch panel are clogged with dust or debris. Also make sure that there is clearance around the touch panel as shown in **Chapter 4: Installation and Wiring**.

Run Tests under System Setup Screens

- Use the touch panel's System Setup Screens to test the touch screen, display, communication ports, beeper and audio output (only with external amplifier and speaker(s) connected). See **Chapter 5: System Setup Screens** for additional details for the **Test Menu**.

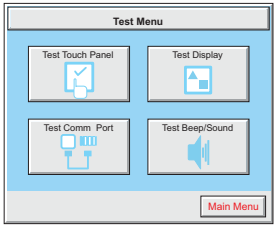

Test Touch Panel - allows the user to check the analog touch function of the screen by drawing free hand lines and shapes across the entire touch area. The display will retain the lines where the screen has been touched until the **Cancel** button is pressed.

Test Display - used to test the display and color rendition. A test pattern will first show both the primary colors (if applicable) and a gray scale. If the touch screen is not pressed within a few seconds, the display will go into alternating color sweeps across the screen until the panel is pressed again. If the screen is pressed when the test pattern first appears, it will stay in this mode until the **Cancel** button is pressed.

Test Comm. Port - used to test the functionality of both the 15-pin PLC communication serial port and the Ethernet port (non -R models only). A loop-back connector can be fabricated and used on the 15-pin serial port to test both the RS-232 and RS-422/485 communications for the TxD and RxD signals and also the RTS and CTS signals if applicable. The **Test Comm. Port** setup screen and **Chapter 5** show pin-outs for the both the RS-232 and RS-422/485 loop-back connectors. The Ethernet connection can also be tested for communications if it is at least connected to an Ethernet hub or switch. If the touch panel is connected to a PLC, then an inquiry test can also be done to test the communications between the panel and the PLC. Press the **Cancel** button when finished to return to the **Test Menu** screen.

Test Beeper/Sound - used to test the touch panel's internal beeper and also test the audio line output port with an external amplifier and speaker(s) connected. Testing the audio output is done by playing an included internal WAV file. Press the **Cancel** button when finished to return to the **Test Menu** screen.

Check Memory Usage via System Setup Screens

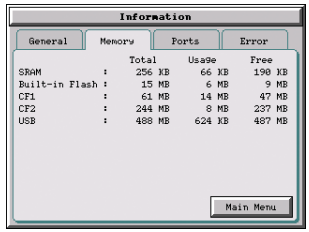

- A good time to check and record the touch panel's memory usage for future reference is during a routine maintenance schedule. The various memory devices being used by the panel are listed under the tab. This includes the SRAM, Built-in Flash and any external memory device such as a USB pen drive or CompactFlash memory. If no external memory device is inserted, it will not show up on the list. The amount of total, used and free memory is shown. The memory usage can be viewed by use of the panel's **System Setup Screen's Main Menu**, and then selecting the **Information** button. Look under the **Memory** tab. See **Chapter 5: System Setup Screens** for additional details on using the **Memory** tab.

Check/Adjust Display Brightness or Contrast

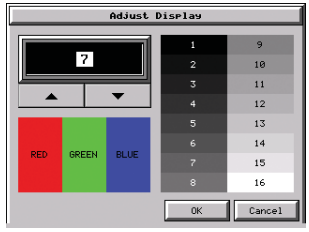

- Is is good practice to occasionally check the display brightness or contrast and adjust as required. This is done by using the **Setting Menu** in the **System Setup Screens**. Keep in mind that only the **contrast** can be adjusted on the STN type display models and only the **brightness** can be adjusted on the TFT type display models. See **Chapter 5: System Setup Screens** for additional details.

Check Error Log via System Setup Screens

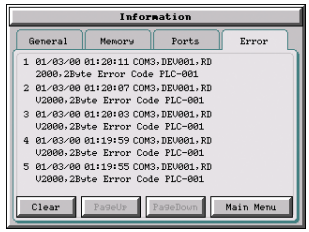

- Another good practice is to review the touch panel's **Error Log**. The log can be viewed by use of the panel's **System Setup Screen's Main Menu**, and then selecting the **Information** button. Look under the **Error** tab. See **Chapter 5: System Setup Screens** for additional details on using the **Error** tab, **Appendix A: PLC Protocol Error Codes** for a list of the error codes as they relate to the specific PLC that is being used with a description of the error, and **Appendix B:Touch Panel Runtime Errors** for a list of errors that may occur when the panel is in operation.

Adjust Touch Panel via System Setup Screens

- It is recommended that a regularly scheduled maintenance program include **adjusting** the touch panel. The adjustment can be looked at as "calibrating" the touch area of the panel. The procedure should also be done anytime that it seems the touch area being pressed for an object is out of position by a small amount. The procedure is done by using the **Setting Menu** in the **System Setup Screens** and then selecting the **Adjust Touch Panel** button. See **Chapter 5: System Setup Screens** for additional details.

Replace Battery Periodically

- The lithium battery in the touch panel is used to maintain the system SRAM retentive memory and the CPU date/time registers when the unit is without external power. Before replacing the battery, back-up the data in your SRAM retentive memory as a precaution. **Input power needs to be maintained to the panel during battery replacement or the SRAM retentive memory and date/time registers will be cleared.** Typical battery life is five years, which includes panel runtime and normal shutdown periods. The battery's status can be checked under the **General** tab of the **Information** screen of the **System Setup Screens**, see **Chapter 5**. However, consider installing a fresh battery if your battery has not been replaced recently and the unit will be without power for a period of more than ten days. A replacement battery can be purchased from ***AutomationDirect*** as part number D2-BAT-1 (#CR2354).

D2-BAT-1

CAUTION - The battery used in this device may present a risk of fire or chemical burn if mistreated. Do not recharge, disassemble, heat above 100 °C (212 °F) or incinerate. Replace battery with AutomationDirect part number D2-BAT-1 or CR2354 only. Use of another battery may present a risk of fire or explosion. Dispose of used battery properly. Keep away from children.

Perchlorate Material, special disposal handling may apply

Cleaning the Display Screen

- The display screen should be cleaned periodically by wiping it with a lint free damp cloth using a mild soap solution. Dry the surface when finished with a lint free cloth. Do not clean with ammonia based products. The ABS material the bezel is made from is reactive with ammonia.
- The longevity of the display can be increased by the use of a non-glare screen protector, p/n **EA-XX-COV2**, where XX = touch panel screen size, 6, 8, 10, 12, or 15. See **Chapter 3: Accessories** for additional information on the screen protectors.

EA-6-COV2

- To prevent damage to the display screen, avoid touching the screen with sharp objects, striking the screen with a hard object, the use of abrasives near the screen, or using excessive force when pressing the touch screen. In the event that the touch screen membrane becomes damaged or scratched, the bezel, which includes the clear membrane window, can be replaced on the 8", 10", 12" and 15" touch panels. See **Chapter 9: Replacement Parts** for additional information on the replacement bezels. The bezel with clear membrane window can be replaced on the 6" touch panels by calling our technical support department at 770-844-4200 to make arrangements for returning the unit for repair.

Check Project Functionality

- During a routine maintenance schedule is a good time to check the functionality of your application, making sure that various areas on different screens do what they were designed to do. An outline or specification for the application is a useful tool for testing the various aspects of your application. As a starting point, you may want to run through all the screens to make sure they are accessible.
- If there are any trouble-shooting procedures built into the touch panel application, now is a good time to also check these aids.

Checks from *C-more* Programming Software

- If you have a PC available with the *C-more* programming software, EA-PGMSW, installed, and the PC is connected to the touch panel, there are checks you can make to the status of the touch panel by using the **Panel Information...** feature located under the **Main Menu** heading **Panel**. This includes the following:
  - Connect Panel Information
  - Memory availability and usage
  - Power Voltage
  - Battery Voltage:
  - Revisions

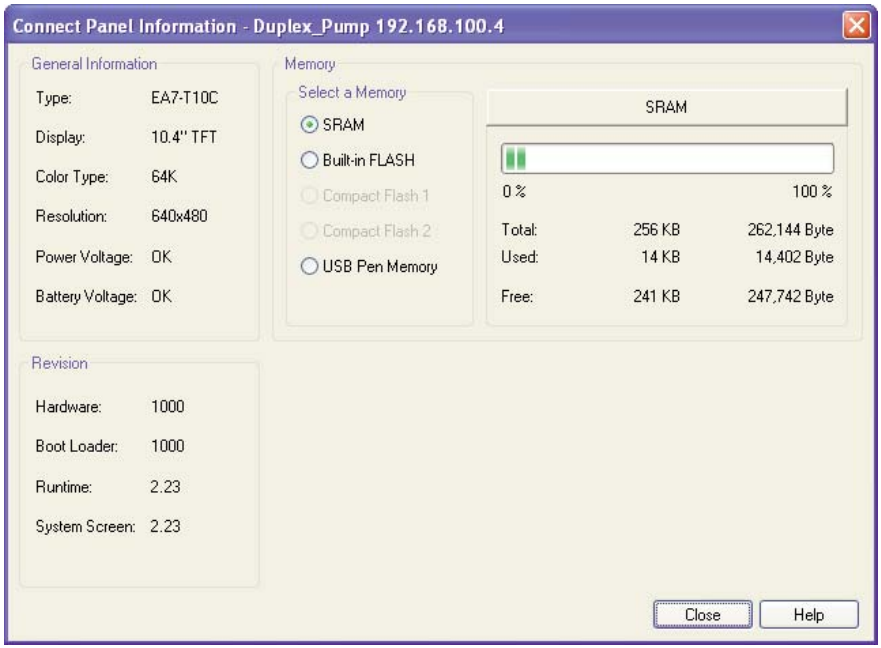

- Other functions that can be accessed from the programming software directly to the touch panel include: **Display Screen**, **Reboot**, **Adjust Clock**, **Memory Clear**, and **Update Firmware**. Additional information for these functions can be found in the *C-more* programming software on-line help.

Notes:

TROUBLESHOOTING

CHAPTER 8

In This Chapter...

Common Problems 8–2
Toubleshooting Flow Chart 8–3
Touch Panel does not Power up 8–4
Display is Blank 8–5
Display is Dim 8–6
No User Program 8–7
No Communications between Panel and PC (Personal Computer) 8–8
No Communications between Panel and PLC 8–13
IP Address in System Setup Screens displays 0.0.0.0 8–16
Difficulty Connecting to the Panel over the Internet (Web server and Remote Access features) 8–17
PLC Protocol Error Codes 8–18
Touch Panel Runtime Errors 8–19
Panel Constantly Displays “Initializing” when Powering up 8–20
Data not Logging Problems 8–20
Loss of Date/Time and Retentive Data 8–21
Electrical Noise Problems 8–21

The following topics are some of the more likely problems that may be encountered during the installation and operation of your *C-more* touch panel. We have made some suggestions on what to check in order to correct the problem. Please start with the troubleshooting flow chart that covers the more common problems encountered by other users.

Common Problems

The troubleshooting flow chart shown on the following page is based on the more common problems fielded by our technical support team. If you are having problems, please start with the flow chart, follow the suggestions listed, and if you still need help, call our tech support team @ 770-844-4200. In addition to having ready the information suggested in the flow chart, please have the following available:

1) *C-more* touch panel part number including serial number with date code. See page 1-5 in this hardware user manual for an explanation of the part number, serial number, and date code breakdown. Why is this information important? The various sizes of the touch panel use different processors and memory sizes, and therefore can have different types of problems within the particular panel size.

2) Programming software version that you are currently using. For example: Version 2.20 (Please note that software versions 2.0.7.35 and before will also have a build number such as 2.0 Build 07.35). Having the software version number will allow our tech support team member to assess whether there are similar problems that have been reported when using the same version of the software. The programming software version can be found by clicking on "**About C-more Programming Software...**" selection under the **Help** pull down menu in the software. Also, it is always a good practice to visit the **Software/Firmware Downloads** area under the Tech Support section of the ***AutomationDirect*** website and check to see if you are using the latest version of the programming software. If you aren't using the latest software version, we suggest that you upgrade to see if this resolves your problem.

Note: *The* ***"About C-more Programming Software..."*** *dialog box will show a Firmware version on the newer releases of the programming software. This is the current firmware version that is included with the programming software and does not reflect what firmware is actually loaded on your* ***C-more*** *touch panel. See the following for details on how to check the firmware version.*

3) Firmware version of the *C-more* touch panel. For example: 2.0 Build 07.32 or 2.0.07.32. The firmware version can be checked by using the **System Setup Screens**, going to the **Information** menu under the **Main Menu**, and looking under the **General** tab for **Firmware: -Runtime**. The firmware version can also be checked by using the programming software, while connected to the panel, and clicking on the **Panel Information** selection under the Panel pull down menu. As with the programming software version, it is important for our tech support associates to know which firmware version you are using so they can check on any known problems. As with the programming software, we strongly suggest that the firmware be updated to the latest version. Check for the latest version and downlaod from the **Software/Firmware Downloads** area of the ***AutomationDirect*** website.

It is also helpful to have a copy of your project file for our tech support associates to use in troubleshooting a problem, so please be prepared to forward a copy of your project if it is requested.

Toubleshooting Flow Chart

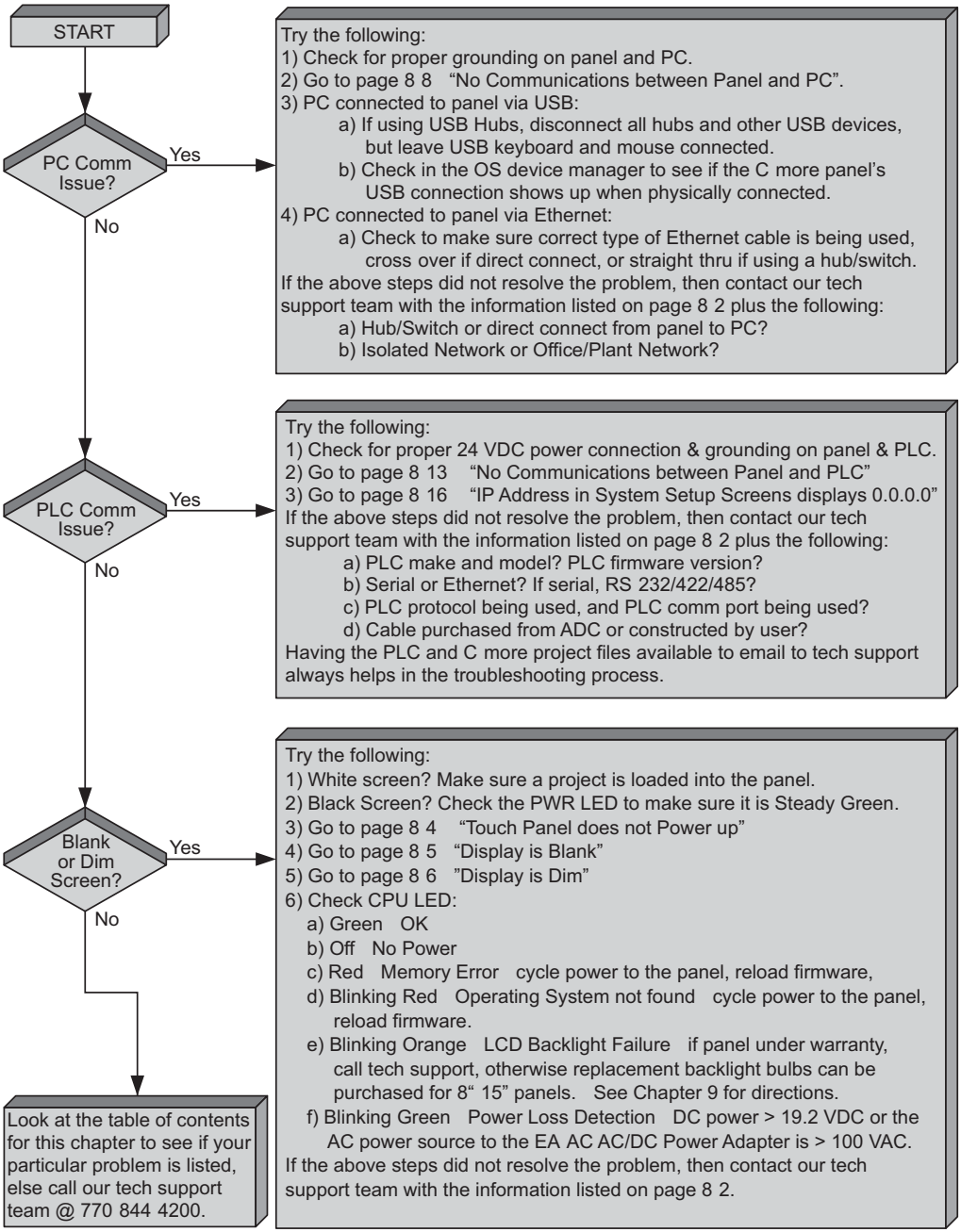

Touch Panel does not Power up

1.) Check the status indicators on the rear of the panel to see if the **Power LED (Green)** indicator is on. Reference the diagram shown below. If the **Power LED (Green)** indicator is on and the panel was observed showing "Initializing..." during power up, but the display is now blank, go to the next troubleshooting tip, **Display is Blank**.

2.) If the **Power LED (Green)** indicator is off and the panel is being powered with a 24 VDC power source, use a voltmeter to check the incoming DC voltage level. The DC voltage level should be in the range of 20.4 to 28.8 VDC. If the incoming DC voltage is zero, check any fusing that may be in the circuit. If the fuse is open, determine cause and replace. If the DC voltage level is out of range, the DC power source needs to be corrected or replaced.

3.) If the **Power LED (Green)** indicator is off and the panel is being powered with an AC/DC Power Adapter, EA-AC, use a voltmeter to check the incoming AC power. The AC voltage to the AC/DC Power Adapter should be in the range of 100 to 240 VAC, 50/60 Hertz. If the incoming AC voltage is zero, check any fusing that may be in the circuit. If the fuse is open, determine cause and replace. If proper AC voltage is present on the AC/DC Power Adapter, but the **Power LED (Green)** indicator is off, replace the AC/DC Power Adapter, EA-AC.

8

C-more LED Status Indicators

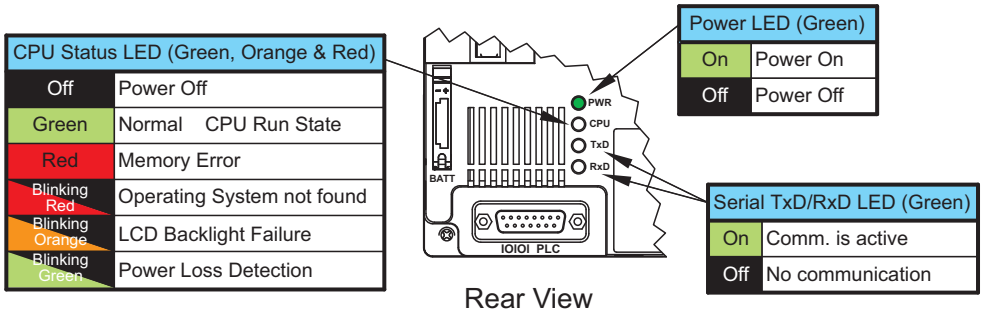

Display is Blank

1.) Touch the screen to make sure the panel is not in the **Screen Saver** mode.

2.) If the panel is not in **Screen Saver** mode, check the status indicators on the rear of the panel.

C-more LED Status Indicators

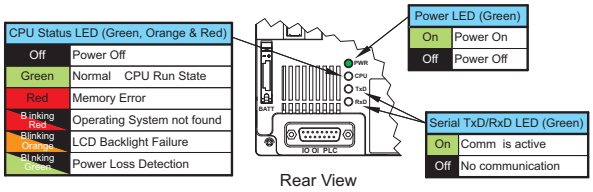

- The **Power LED (Green)** should be on. If not, check the incoming power as explained in the "Touch Panel does not Power Up" section.
- Make sure the **CPU** status **LED (Green, Orange, Red)** is a **steady Green**.
- A **blinking Orange** colored **CPU** status **LED** indicates a failed LCD display backlight. The backlights are user replaceable on the 8", 10", 12" and 15" C-more touch panels. See **Chapter 9: Replacement Parts** for additional information on the replacement backlights.
- If the **CPU** status **LED** is **blinking Green**, then the supply voltage is below 19.2 VDC, or below 100 VAC when using the optional ***C-more*** AC/DC Power Adapter, EA-AC. The backlight will turn off immediately to extend the power retention period. The panel will continue to run and the LCD display will be slightly visible. This may be seen as the display being dim, so it is advisable to check the incoming voltage. The panel does not turn off until the DC voltage drops below 5 VDC or below 58 VAC when using the AC/DC Power Adapter, EA-AC.
- A **blinking Red CPU** status **LED** indicates that the operating system could not be found. Reload the firmware to the touch panel. If this does not resolve the problem, contact the ***AutomationDirect*** returns department @ 1-800-633-0405 to make arrangements for returning the unit for repair.

3.) There is always the remote possibility that a project has been transferred to the touch panel that includes a screen that uses a black background and has no objects placed on the screen. To check for this possibility, access the **Main Menu** of the touch panel **System Setup Screens** by pressing the extreme upper left corner of the panel display area for three (3) seconds as shown below. If the **System Setup Screen's Main Menu** is displayed, then most likely an empty black background screen is being displayed.

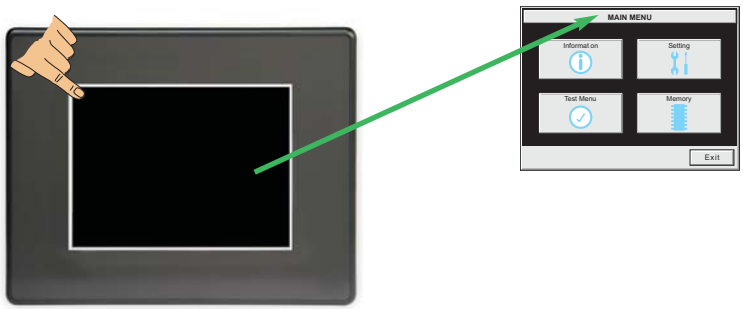

Display is Dim

1.) Check either the contrast or brightness setting found under the System Setup Screens. Keep in mind that the STN type display models can have the contrast adjusted. The TFT type display models can have the brightness adjusted. See **Chapter 5: System Setup Screens** for additional information.

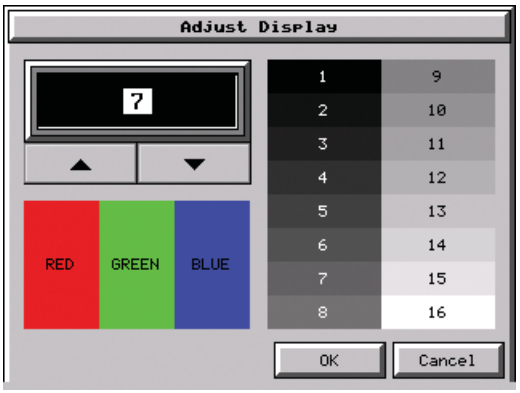

2.) Backlights will slowly lose some luminance causing the display to slightly dim. The backlight average lifetime is rated at 50,000 hours and is defined as the average usage time it takes before the brightness becomes 50% of the initial brightness. The lifetime of the backlight depends on the ambient temperature; the lifetime decreases in low or high temperatures. To improve the backlight life, use the **Start Screen Saver** function that is available in the ***C-more*** Programming Software in the Panel Manager dialog box. The backlights are user replaceable on the 8", 10", 12" and 15" ***C-more*** touch panels. See **Chapter 9: Replacement Parts** for additional information on the replacement backlights.

3.) Another condition that may make the display appear dim is to view the touch panel in direct sunlight or in a location where direct light is reflected onto the display. The ***C-more*** touch panel displays have **Display Brightness** ratings of 150 to 300 cd/m^2 (NITS), depending on the particular model. The higher the cd/m^2 (NITS) rating, the more visible the display will be under bright lighting conditions.

No User Program

If the touch screen is displaying the message “No User Program” after it has powered up, then either:

– the built-in Flash memory does not contain a recognized project, or

– a CompactFlash memory card is plugged into the CF1 slot and there is no project on the CompactFlash memory card. Turn the power off, remove the CompactFlash memory card and turn the power back on.

Keep in mind that on power up, the touch panel will either copy the project from its internal Flash memory to its internal SDRAM memory and run the project, or if a CompactFlash memory card is plugged into the CF1 slot, then any project contained on the CF memory card will be copied to the panel’s internal SDRAM memory and be run. In other words, the memory of a CompactFlash card on CF1 will override the panel’s internal Flash memory on power up or reboot, even if the CompactFlash memory card does not contain a project.

No Communications between Panel and PC (Personal Computer)

The *C-more* touch panel is programmed using the *C-more* Programming Software, EA-PGMSW. The developed project is transferred from the PC to the touch panel by either a USB or an Ethernet connection between the two. (Ethernet available on full feature units only.)

1.) If using USB, then a USB type AB programming cable, such as p/n USB-CBL-AB15, should be used to make a connection between the panel's USB Port, Type B and a USB port on the PC. The *C-more* Programming Software will install a USB driver on the PC during the software installation.

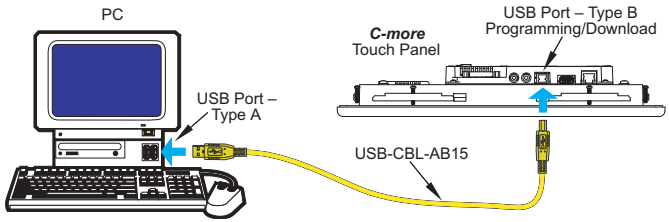

Use the programming software to check the status of the USB communications. From the **Navigation** window, select the **Panel** tab. At the bottom of the **Panel** tab is the **Communication Config** dialog box. If the USB communications to the panel is working, then the USB radio button should be checked and there should be a "green" indicator next to the USB selection. For reference, if the USB driver is working and you open the **Device Manager** in **Windows**, you should see a **"C-more HMI"** USB connection under **Universal Serial Bus controllers** selection. You can also make sure the *C-more* USB driver has been installed by looking for the following file: **C:\WINDOWS\System32\Drivers\kyceusb.sys** If the indicator is "red", then try using a different cable. If replacing the cable does not fix the communications, you may need to try a different USB port on the PC. If there are any USB hubs or other USB devices being used, you may need to temporarily eliminate them to see if this solves the problem.

Note: *When transferring a project to the panel using the* ***Send Project to Panel*** *function, there is a possibility even with a USB programming cable properly connected between the touch panel and PC, and having a green indicator displayed next to the USB radio button in the* ***Step 3 - Project Transfer*** *dialog box, that the* ***Transfer*** *button in the dialog box will still be dim. The green indicator means that the very lowest level of USB communications is connected, but it does not necessarily mean the panel and PC are communicating. If the* ***Transfer*** *button is dim, then the panel and PC are not communicating. If a PLC is connected to the serial port of the panel, try disconnecting it. If this corrects the problem, then check your grounding for the PLC and the panel. If this does not correct the problem, see the* ***C-more*** *Programming Software Installation Guide for reinstalling the USB driver.*

2.) When using an **Ethernet** connection to communicate between the touch panel and the PC and the communications does not seem to be working, the first area to check is the Ethernet status indicators located next to the **10/100 Base-T Ethernet Port** on the rear of the panel. The **Link Status LED** must be displaying a **Steady Green**.

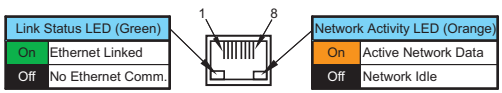

No Communications between Panel and PC (Personal Computer) (cont'd)

If using an **Ethernet** connection to program the touch panel, there are two basic ways to make the connection. You can use a "crossover" **Ethernet** cable to make a direct connection between

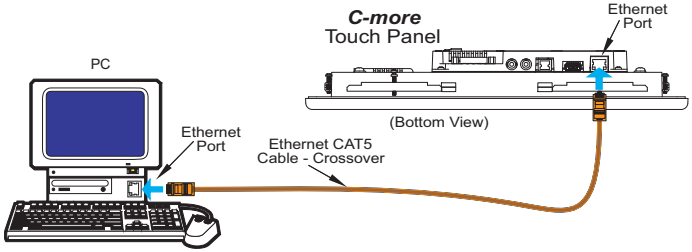

the touch panel and the PC or a "straight-thru" **Ethernet** cable from the touch panel to a hub, switch, etc. that is also connected to the PC.

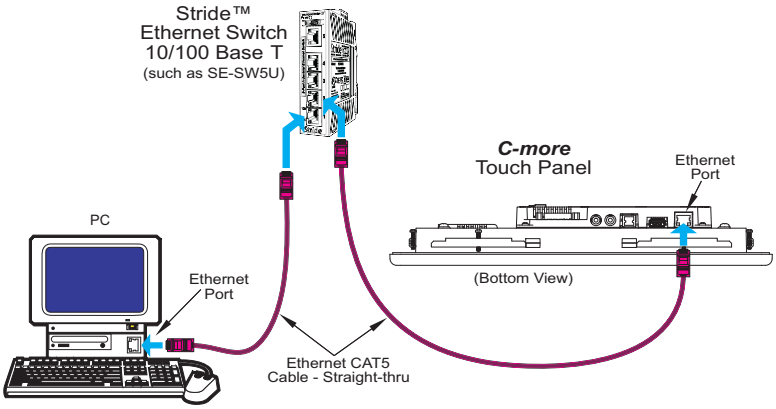

Use the *C-more* programming software to check the status of the **Ethernet** communications. From the **Navigation** window, select the **Panel** tab. At the bottom of the **Panel** tab is the **Communication Config** dialog box. Select the **Browse** button. If the connection is working the panel will be listed in the online link list. Select the panel and then select OK. If the **Ethernet** communications to the panel is working, then the **Ethernet** radio button should be checked and there should be a "green" indicator next to the **Ethernet** selection. There should also be an **IP Address** shown in the browse box below the **Ethernet** selection. If the **Ethernet** radio button is "red", then you will need to check your **Ethernet** cables and connections or **Browse** for the panel. There can also be a conflict with another Ethernet connection that may be using the same **IP Address**. You may want to check the setup both in the touch panel and also in your PC. As a starting point, it is best to start with an assigned IP Address and Subnet mask, mainly to eliminate IP addressing conflicts. Use the *C-more* programming software and open the **Touch Panel Network** dialog box under the **Main Menu's Setup** drop down menu. Click on the **Ethernet Port** tab to display the dialog box used to set up the touch panel's **Ethernet** port.

Another cause of an Ethernet communications problem that may be encountered, is the touch panel doesn't show up in the node list, which can be caused by the PC having a firewall.

No Communications between Panel and PC (Personal Computer) (cont'd)

The figure below shows the **Touch Panel Network** dialog box with the **Ethernet** port tab opened. The **Save settings to Project** check box is checked and we are using the **Use the following IP Address** selection by checking its radio button. **The subnet (192.168.X.X) and the subnet mask (255.255.0.0) must be the same for both the panel and the PC.** See the *C-more* programming software on-line help for additional details regarding the **Touch Panel Network**.

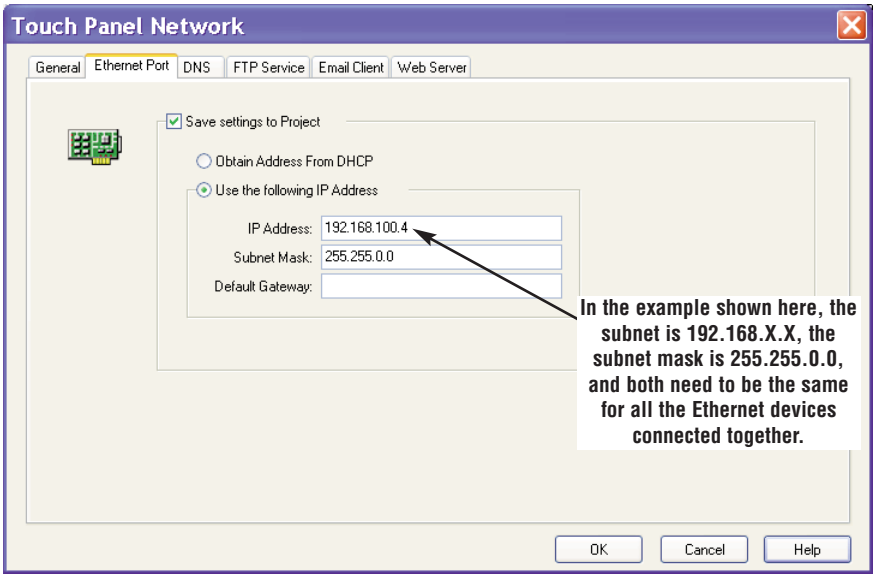

The **IP Address** assigned to the touch panel can also be checked or edited by using the system setup screens built into the touch panel. See **Chapter 5: System Setup Screens** for additional information.

The figure below shows a different example of the panel's **System Setup Screens' Ethernet Port** dialog box for configuring the **Ethernet** port. Again, make sure the subnet (172.22.X.X) and subnet mask (255.255.0.0) is the same for both the panel and the PC.

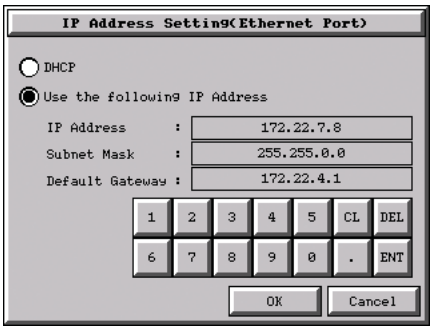

No Communications between Panel and PC (Personal Computer) (cont'd)

Another option for accessing the **IP Address** assigned to the touch panel is to use the ***C-more*** Programming Software. Open the **Navigation** window's **Panel** tab and click on the **Browse** button under the **Communication** window at the bottom. This will open the **Ethernet Connection Setup** window. The **Online Link List** tab will show all of the connected panels. If none are shown, try clicking the **Browse Network** button to search for attached devices. Double click on the **Panel Name** you want to access and this will bring up the **Change IP Address** window. In this window changes can be made to the panel's name, IP address, subnet mask, and default gateway.

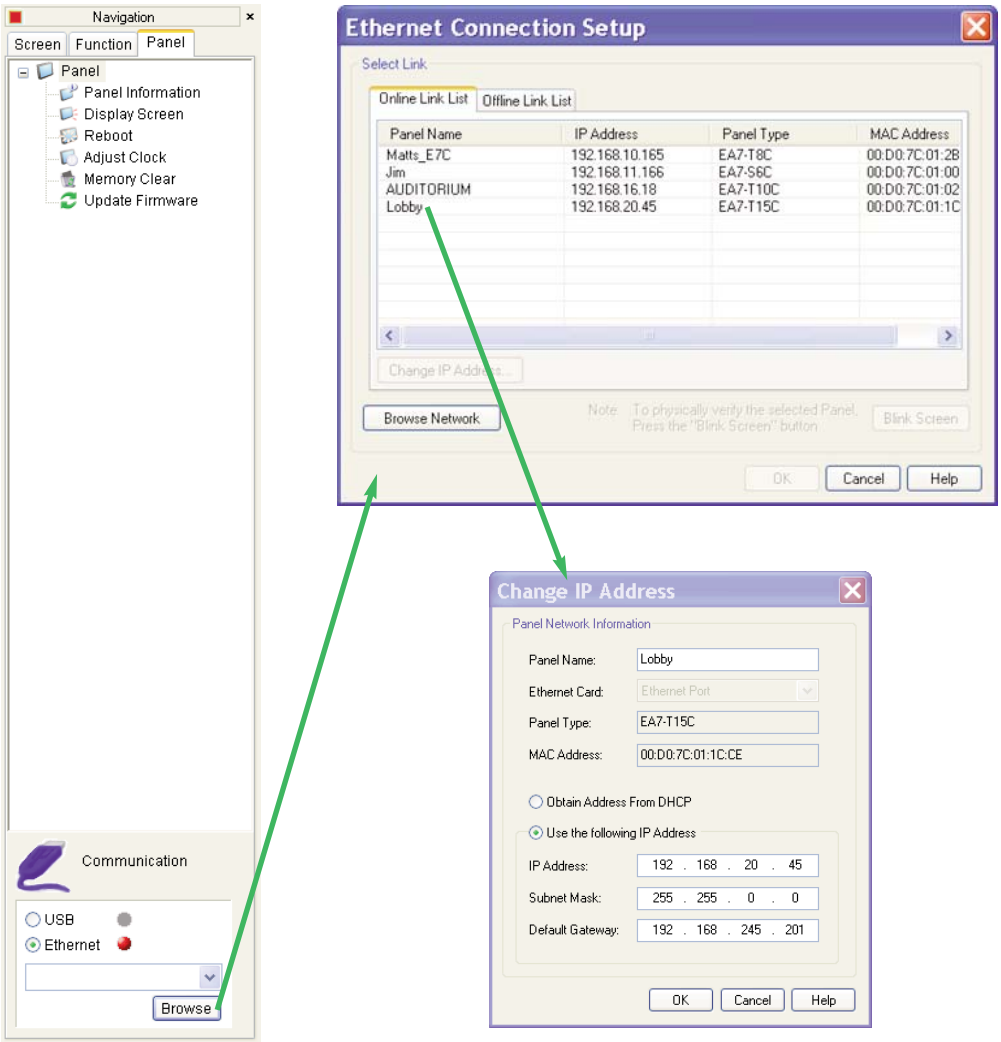

No Communications between Panel and PC (Personal Computer) (cont'd)

Check the **IP Address** setting of the PC by opening the Windows operating system's **Control Panel** and then selecting the **Network Connections** utility. Click on **Properties**, scroll down to **Internet Protocol** (TCP/IP) and click **Properties**. The **Internet Protocol** (TCP/IP) **Properties** dialog box will open. Again, make sure the **Subnet Mask** is set the same for both the panel and the PC and also make sure that the **IP Addresses** do not conflict.

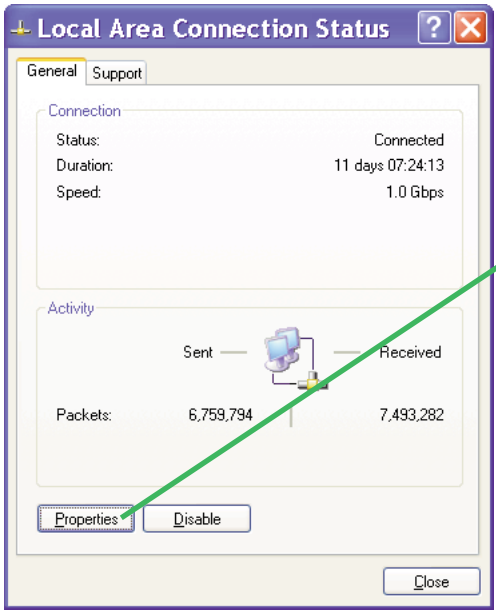

Note: *If a* ***DHCP*** *Server is being used to obtain the* ***IP Address*** *for the PC, there are ways to identify the* ***IP Address****. For example, if using* ***Windows XP****, open a* ***Command Prompt (Run > CMD)*** *and type* ***IPCONFIG /ALL****. A list of all Ethernet assignments for the PC will be shown.*

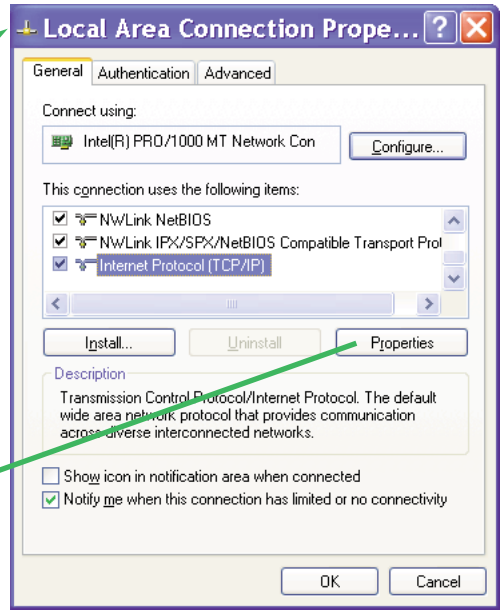

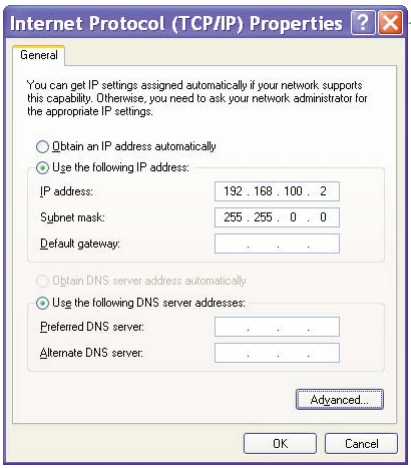

No Communications between Panel and PLC

The communications between the ***C-more*** touch panel and designated PLC or controlling device can be accomplished by either a serial connection to the panel's **15-pin PLC Communications Port** or by an **Ethernet** connection to the panel's **10/100 Base-T Ethernet Port**. (Ethernet available on full feature units only.)

1.) If the touch panel and PLC are connected serially and the communications have seemed to stop working, then first check the **TxD** and **RxD** status indicators on the rear of the panel for activity.

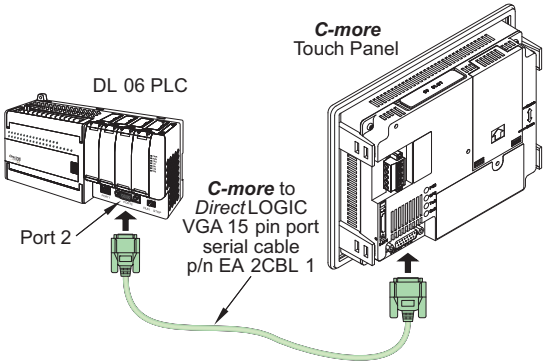

If there is no activity on one or both the **TxD** and **RxD** status indicators, then it should be suspected that either:

- serial comm port settings are incorrect
- the cable is bad and needs to be replaced
- the serial port on the panel is defective
- the PLC serial port is bad

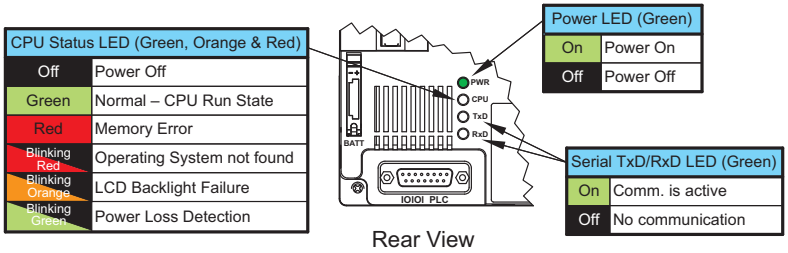

The status indicators will show activity whether the serial communications is wired for RS-232 or RS-422/485.

Electrical noise, pulse generating wiring and/or improper grounding can also cause problems with communications. Refer to the **Electrical Noise Problems** section on page 8-17 for additional help.

(**Serial** connections between the touch panel and PLC continued on next page.)

No Communications between Panel and PLC (cont'd)

The serial port on the *C-more* touch panel can be tested using the panel's system setup screens. Access the **Main Menu** of the panel's system setup screens, press the **Test Menu** button and then press the **Test Comm. Port** button. You will need to fabricate a **Loop Back Connector** for the type of serial connection that is being used in your application, either RS-232 or RS-422/485, per the wiring diagrams shown below. Plug the loop back connector into the panel's 15-pin PLC serial communications port and then press the **Loop Back Test** button to run the test. See **Chapter 5: System Setup Screens** for additional information.

Loop back connector wiring diagrams:

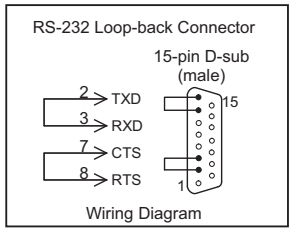

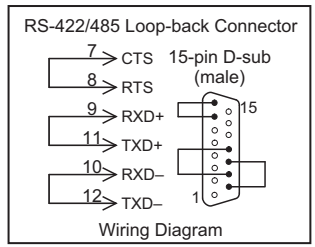

System setup screens **Test Comm. Port** dialog boxes:

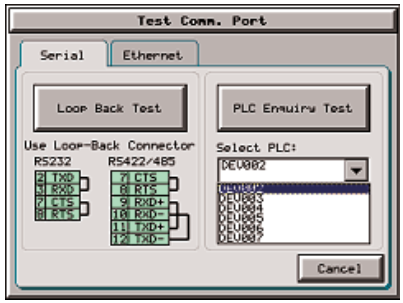

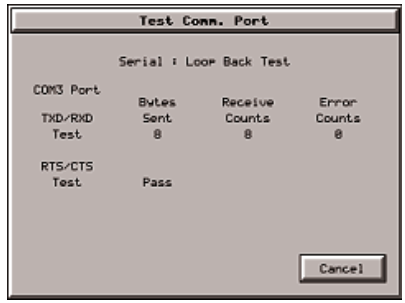

The **PLC Enquiry Test** can also be performed to determine if the **Ethernet** communication is working correctly between the panel and designated PLC .

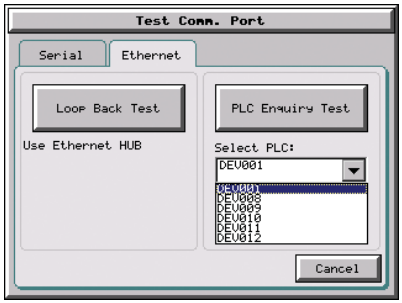

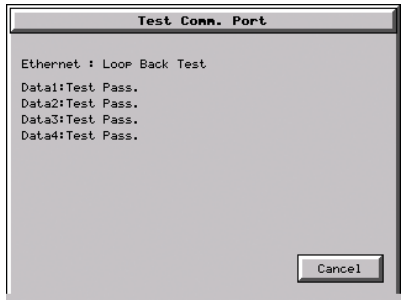

(**Ethernet** connections between the touch panel and PLC continued on next page.)

No Communications between Panel and PLC (cont'd)

2.) If using an **Ethernet** connection between the touch panel and the PLC, and there is a problem with the communications, the first area to check is the **Ethernet** status indicators located next to the **10/100 Base-T Ethernet Port** (shown below) on the rear of the panel.

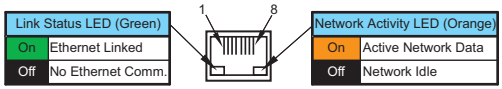

There are two basic ways to make the connection. You can use a crossover **Ethernet** cable (shown below) to make a direct connection between the touch panel and the PLC or a

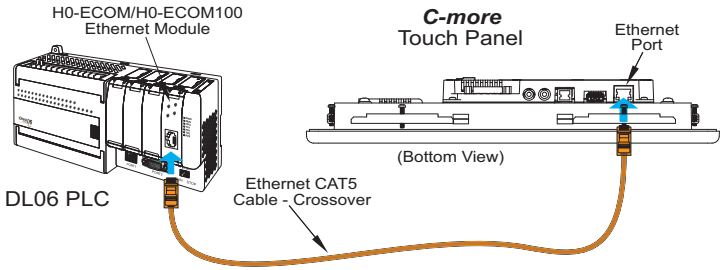

regular **Ethernet** cable (shown below) from the touch panel to a hub, switch, etc. that is also connected to the PLC.

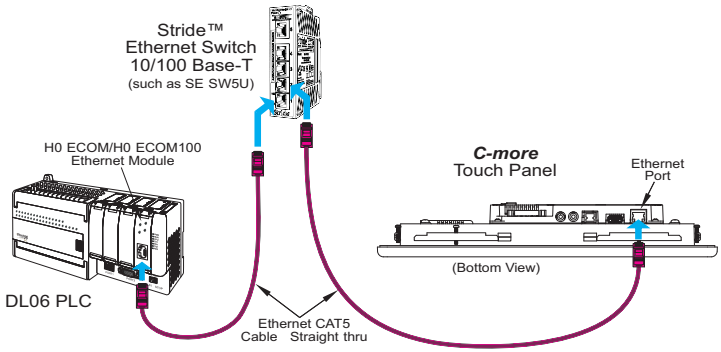

Check the status indicators that may be included with the **Ethernet** communications module or device that is part of the PLC. Refer to the PLC's Ethernet user manual for further troubleshooting information.

(**Ethernet** connections between the touch panel and PLC continued next page.)

No Communications between Panel and PLC (cont'd)

The **Ethernet** port on the *C-more* touch panel can be tested by using the panel's system setup screens. Access the **Main Menu** of the panel's system setup screens, press the **Test Menu** button and then press the **Test Comm. Port** button. Select the Ethernet tab in the Test Comm. Port dialog box, make sure the Ethernet port is connected to an Ethernet hub or other Ethernet communications device, and then press the **Loop Back Test** button to run the test. See **Chapter 5: System Setup Screens** for additional information.

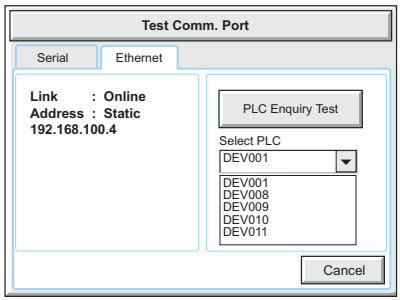

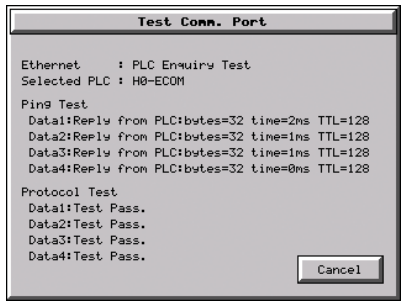

8

If a PC running the *C-more* programming software is connected to the **Ethernet** network that is also connected to both the touch panel and PLC, then certain functions in the software, such as the **Main Menu's Setup** drop down selection for **Panel Manager** or **Touch Panel Network** and the **Main Menu's Panel** drop down selection for **Panel Information**, can be used to help troubleshoot problems with the touch panel's communications and operation. See the *C-more* programming software's on-line help for additional information.

IP Address in System Setup Screens displays 0.0.0.0

Note: *If entering an* ***IP Address*** *for the* ***C-more*** *touch panel using the* ***System Setup Screens****, and the IP Address keeps displaying 0.0.0.0, even after entering an IP address, the panel is not functionally connected to an active network. Either the cable, hub, or switch is bad. The entered* ***IP Address*** *is stored in the panel's memory, but won't show up until a good connection is established. Keep in mind that if in the* ***C-more*** *programming software's* ***Touch Panel Network*** *dialog box, under the* ***Ethernet Port*** *tab, you have checked the* ***Save settings to Project*** *check box and have entered an* ***IP Address*** *of 0.0.0.0, then anytime the project is transferred to the panel, the panel's* ***IP Address*** *will be overwritten with the entered address.*

Difficulty Connecting to the Panel over the Internet (Web server and Remote Access features)

1) Refer to the software help file topics **Tough Panel Network** and **Remote Access Setup** for information on configuring the Remote Access accounts, the Web Server Function and the panel IP Attributes.
2) In the Ethernet Port tab if DHCP is selected for assigning the IP address, verify the currect address of the panel. The IP address assigned by DHCP may change over time.
3) Note that the Web Server Function must be enabled on the Web Server tab before the Remote Access Server Function can be accessed on the panel.
4) Verify that the correct TCP ports have been opened on the router controlling access to the network where the C-more panel resides.
5) If two C-more panels are on a network behind a firewall and they have the same **Remote Access port number**, the router will use the first entry in the Port Forwarding setup that it encounters. The same C-more panel will always come up even if the two panels have two different Web Server Port numbers.
6) When entering the URL in Internet Explorer to connect the C-more web server using a port number other than the default (80), be sure to use the full URL text including the prefix "http://". The URL should be http://xxx.xxx.xxx.xxx:aaaaa where xxx.xxx.xxx.xxx is the IP address of the panel and aaaaa is the port number configured in the Web Server tab of the Touch Panel Network setting.

PLC Protocol Error Codes

The *C-more* touch panel includes built-in PLC communication protocol diagnostics that monitor the exchange of data between the panel and the PLC. The diagnostics look for the proper exchange of data, correct handshaking signals, addressing errors, incorrect data bytes, wrong packet format, etc. The diagnostics also monitor and report any of the errors that the designated PLC would normally generate if there is a problem with the PLC's communications. Each brand of PLC has its own unique set of diagnostic errors that are typically communicated over the PLC's communications port. The PLC generated errors are interpreted by the *C-more* software. See the PLC manufacturer's user manuals for additional details on the designated PLC's errors.

If a *C-more* communications error does occur, the error message will be displayed in the upper left of the *C-more* screen and the **Error Code** is recorded in the panel's error log. If a PLC error occurs, the PLC error code number will appear across the top of the screen, the PLC error message may not be included in some cases. The error log can be viewed using the system setup screens. See **Chapter 5: System Setup Screens** under the **Information** window to bring up the **Error** tab which includes a description of the logged data.

A detailed list and description of the various PLC protocol errors can be found in **Appendix A: PLC Protocol Error Codes**.

PLC Protocol Error Codes example:

Error Codes for *Direct*LOGIC – K-Sequence		
Error Code	**Error Message**	**Description**
PLC-001	PLC Communication Timeout (for single PLC) %Device% PLC Communication Timeout (for multiple PLCs, such as RS-422/485)	A timeout occurred after sending a request to the PLC %Device%. %Device% indicates the device name, such as DEV001. Example error message for multiple PLCs: DEV001 PLC Communication Timeout
PLC-002	NAK received from PLC	A negative acknowledgement (NAK) control code has been generated during a read/write request.
PLC-004	STX is not found	A Start of Text (STX) control code was not found in the data packet received from the PLC.

Touch Panel Runtime Errors

The *C-more* touch panel includes built-in diagnostics that check for proper operation of the panel when it is running a project that has been transferred to its memory. Faults detected while the panel is running will produce a "Runtime" error. These errors are displayed in the upper left of the panel's display and are also recorded in the panel's error log. The error log can be viewed using the system setup screens. See **Chapter 5: System Setup Screens** under the **Information** window to bring up the **Error** tab which includes a description of the logged data.

A detailed list and description of the various touch panel runtime errors can be found in **Appendix B: Touch Panel Runtime Errors**.

Touch Panel Runtime Errors example:

No.	Error Log Code	Error Message Located at upper left of screen	Error Message Tag	Tag Error Code Value	System Screen Info > Error	Cause
Log Error						
1	RTE-001	Log Failed. Not enough Memory Space in %Device%	SYS ERR ERRORCODE	2001	MM/DD/YY HH/MM/SS Error Code RTE-001	The size of the destination memory is not large enough to store the data.
2	RTE-002	Log Failed. %Device% cannot be found	SYS ERR ERRORCODE	2002	MM/DD/YY HH/MM/SS Error Code RTE-002	No device available or the device is defective.
Battery						
1	RTE-031	Low Battery	SYS ERR ERRORCODE	2031	MM/DD/YY HH/MM/SS Error Code RTE-031	The panel's backup battery voltage level has fallen below 1.8 VDC and should be replaced.

Panel Constantly Displays "Initializing" when Powering up

If the touch panel constantly displays a message reading "Initializing" while powering up, then check the following possible causes.

1.) The project that is loaded into the panel's internal SDRAM memory is corrupted. Either use the ***C-more*** programming software to clear the panel's memory and re-transfer the project to the touch panel, or press the upper left corner of the touch panel screen while powering up to bypass the project and go directly to the **System Setup Screen** menu. Select the **Memory** menu, and use either the **Clear Memory** or **Set to Factory Default** utility to clear the panel's memory and re-transfer the project to the touch panel.

2.) A CompactFlash memory card has been plugged into the CF1 slot and the CompactFlash either has no project stored on it or the project is corrupted. Remove the CompactFlash memory card form the CF1 slot and either load the project to the panel's internal Flash memory, or use a CF card reader connected to a PC to clear and re-format the CompactFlash card, or try a different CompactFlash memory card.

Note: *In the Error Log you may find the error RTE-500 - Check Sum Error, which is defined as "Memory in the panel has been corrupted by power loss, etc." If this is the case, try cycling power to the panel, re-transfer the project to the panel, and re-transfer the firmware, etc. in sequential steps to try to correct the problem.*

Data not Logging Problems

If the data log is missing entries, or a Runtime Error for the Log Errors as shown in **Appendix B: Touch Panel Runtime Errors** is seen, then check the following possible causes.

1.) Check that the memory devices, that were selected for **Data Storage** under the ***C-more*** programming software's **Main Menu - Setup** drop down - **Panel Manager** dialog box, are plugged into their proper location. Alarms, messages and screen captures can be independently selected to be saved to either a USB pen drive plugged into the USB Port - Type A, or a CompactFlash memory card plugged into CF1 or CF2. (Full feature units only.)

2.) The memory device could be bad. If possible, check it by plugging it into a PC that has the ability to access the memory device. Also, not all USB devices are compatible with the ***C-more*** touch panels. Try using the ***AutomationDirect*** USB Pen Drive, p/n SDCZ4-2048-A10. Check **System Screen**, **Memory** for the presence of the USB device inserted.

Loss of Date/Time and Retentive Data

If power is cycled to the *C-more* touch panel and it is then noticed that either the **Date/Time** of the panel is no longer correct, or any data that has been setup to be retentive is inaccurate, most likely the backup battery is exhausted and needs to be replaced. See **Chapter 9: Replacement Parts** for additional information on replacing the panel's battery.

D2-BAT-1

CAUTION - The battery used in this device may present a risk of fire or chemical burn if mistreated. Do not recharge, disassemble, heat above 100 °C (212 °F) or incinerate. Replace battery with AutomationDirect part number D2-BAT-1 or CR2354 only. Use of another battery may present a risk of fire or explosion. Dispose of used battery properly. Keep away from children.

Perchlorate Material, special disposal handling may apply

Electrical Noise Problems

Noise is one of the most difficult problems to diagnose. Electrical noise can enter a system in many different ways which fall into one of two categories, conducted or radiated. It may be difficult to determine how the noise is entering the system but the corrective actions for either of the types of noise problems are similar.

- Conducted noise is when the electrical interference is introduced into the system by way of an attached wire, panel connection, etc. It may enter through a power supply connection, the communication ground connection, or the chassis ground connection.
- Radiated noise is when the electrical interference is introduced into the system without a direct electrical connection, much in the same manner as radio waves.

While electrical noise cannot be eliminated, it can be reduced to a level that will not affect the system.

- Most noise problems result from improper grounding of the system. A good earth ground can be the single most effective way to correct noise problems. If a ground is not available, install a ground rod as close to the system as possible. Ensure all ground wires are single point grounds and are not daisy chained from one device to another. Ground metal enclosures around the system. A loose wire can act as a large antenna, introducing noise into the system. Therefore, tighten all connections in your system. Loose ground wires are more susceptible to noise than the other wires in your system. Review **Chapter 4: Installation & Wiring** if you have questions regarding how to ground the touch panel.
- Electrical noise can enter the system through the power source for the touch panel. Installing a properly wired isolation transformer (neutral grounded) for all AC sources can help the problem, but only if wired correctly. DC sources should be well-grounded good quality supplies.
- Never run communication cables or low-voltage power wiring close to high voltage wiring or pulse generating wiring that controls such devices as solenoids, servos, VFOs, etc.

Replacement Parts

Chapter 9

In This Chapter...

Replacement Parts Overview 9–2
Replacement Parts at a Glance 9–2
Battery Replacement & Installation Instructions 9–3
6″ Panel Mounting Clip Replacements & Installation 9–5
8-15″ Panel Mounting Clip Replacements & Installation 9–6
DC Panel Power Connector Replacement 9–7
AC Power Adapter Connector Replacement 9–7
8-15″ Panel Backlight Bulb Replacements & Installation 9–8
6-15″ Panel Gasket Replacement & Installation 9–11
8-15″ Panel Bezel Replacement & Installation 9–12
6″ Adapter Plate Gasket Replacement & Installation 9–14

Replacement Parts Overview

Part Number	Description	Part Number	Description
D2-BAT-1	Battery Replacement	EA-12-GSK	12" Panel Gasket Replacement
EA-BRK-1	6" Panel Mounting Clip Replacements (2 per pk.)	EA-10-GSK	10" Panel Gasket Replacement
EA-BRK-2	8-15" Panel Mounting Clip Replacements (8 per pk.)	EA-8-GSK	8" Panel Gasket Replacement
EA-DC-CON	DC Panel Power Connector Replacement	EA-6-GSK	6" Panel Gasket Replacement
EA-AC-CON	AC Power Adapter Connector Replacement	EA-15-BEZEL	15" Panel Bezel Replacement
EA-15-BULB	15" Panel Backlight Bulb Replacement	EA-12-BEZEL	12" Panel Bezel Replacement
EA-12-BULB	12" Panel Backlight Bulb Replacement	EA-10-BEZEL	10" Panel Bezel Replacement
EA-10-BULB	10" Panel Backlight Bulb Replacement	EA-8-BEZEL	8" Panel Bezel Replacement
EA-8-BULB	8" Panel Backlight Bulb Replacement	EA-6-ADPTR-GSK	6" Adapter Plate Gasket Replacement
EA-15-GSK	15" Panel Gasket Replacement		

Replacement Parts at a Glance:

9

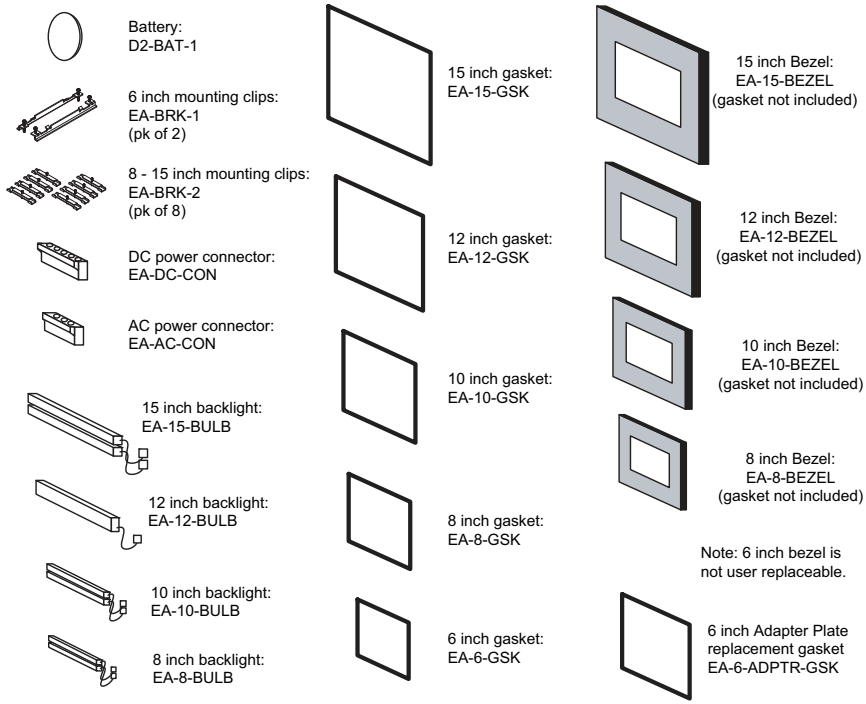

Battery Replacement – D2-BAT-1

CAUTION - The battery used in this device may present a risk of fire or chemical burn if mistreated. Do not recharge, disassemble, heat above 100 °C (212 °F) or incinerate. Replace battery with AutomationDirect part number D2-BAT-1 or CR2354 only. Use of another battery may present a risk of fire or explosion. Dispose of used battery properly. Keep away from children.

Perchlorate Material, special disposal handling may apply

The ***C-more*** touch panels are supplied with a SRAM retentive memory backup battery that also is used to backup the internal CPU date/time registers. The battery should be replaced every 5 years or during any routine maintenance to the touch panel. As a note, the battery used in the ***C-more*** touch panels is the same battery that is used for backup in ***AutomationDirect's*** DL06, D2-250(-1), D2-260 and D3-350 PLCs.

Battery Replacement Instructions:

NOTE: *The lithium battery in your panel is used to maintain the system* ***SRAM*** *retentive memory and the CPU date/time registers when the unit is without external power. Before replacing the battery, back-up the data in your* ***SRAM*** *retentive memory as a precaution. Input power needs to be maintained to the panel during battery replacement. Typical battery life is five years, which includes panel runtime and normal shutdown periods. However, consider installing a fresh battery if your battery has not been replaced recently and the unit will be without power for a period of more than ten days.*

9

Preparation: If the touch panel is not mounted in or has been removed from a control cabinet, then it is recommended the panel be placed face down on a lint-free soft surface to prevent scratching the front of the panel. The battery door is located on the rear just below and to the left of the DC Power Connector.

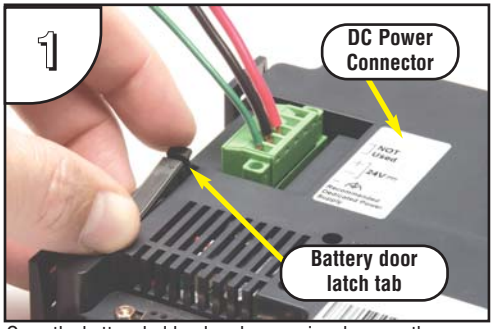

Open the battery holder door by pressing down on the upper latch tab while lifting upward and rotating the door in a downward motion. The battery door will pivot toward its bottom hinge point.

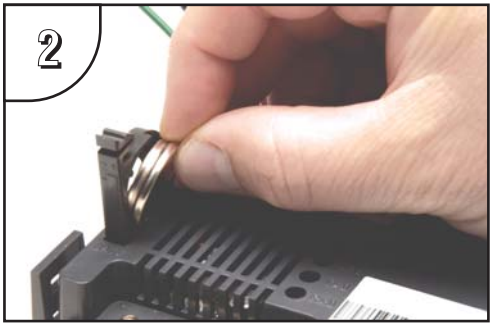

The coin cell style battery is located in the battery holder. To remove the battery, use the slot in the top of the holder to pry the battery away from the holder and while grasping the battery, lift it upward.

Continued on next page.

Battery Replacement Instructions (cont'd):

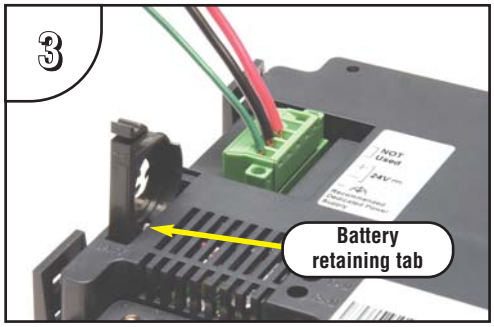

Above shows the empty battery holder and also points out the location of the battery retaining tab for reference in the next step.

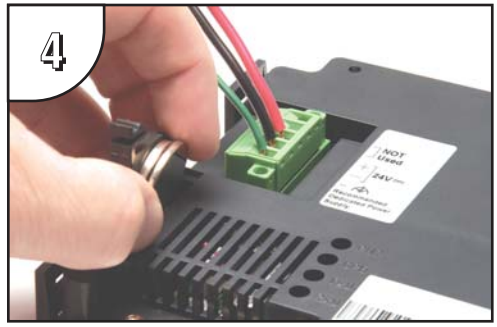

To install the battery, hold the battery so that the larger diameter (+ symbol) is outward. Set the battery to the inside of the retaining tab and then press the upper top of the battery into the holder.

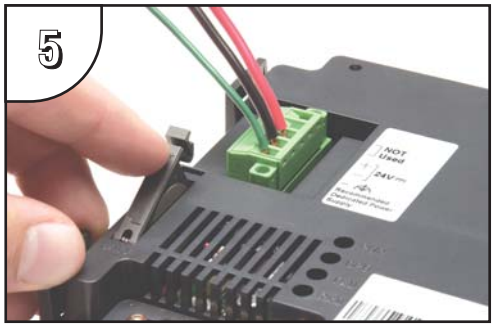

Press the battery holder door downward until the upper latch tab locks into place. Make a note of the date the battery was installed.

CAUTION - The battery used in this device may present a risk of fire or chemical burn if mistreated. Do not recharge, disassemble, heat above 100 °C (212 °F) or incinerate. Replace battery with AutomationDirect part number D2-BAT-1 or CR2354 only. Use of another battery may present a risk of fire or explosion. Dispose of used battery properly. Keep away from children.

Additional precautions:
- **Do not short circuit the battery and be sure to make the correct polarity connections.**
- **Avoid extremely high or low temperatures and high humidity when storing.**
- **Do not dismantle the battery.**

Perchlorate Material, special disposal handling may apply

6” Panel Mounting Clip Replacements – EA-BRK-1

Spare panel mounting clips for 6 inch *C-more* touch panels. Package of 2 clips with 4 screws.

Installation Instructions

Position the touch panel through the cutout in the control cabinet door and hold in place. The mounting clips can be positioned into one of two different set of slots for different cabinet thicknesses. See table below.

The above photo shows one mounting clip in place. The example is using the lower mounting clip slots that accommodates an enclosure thickness of 0.039 – 0.24 inches [1 – 6 mm]. The upper slots can be used for an enclosure thickness of 0.20 – 0.63 inches [5 – 16 mm].

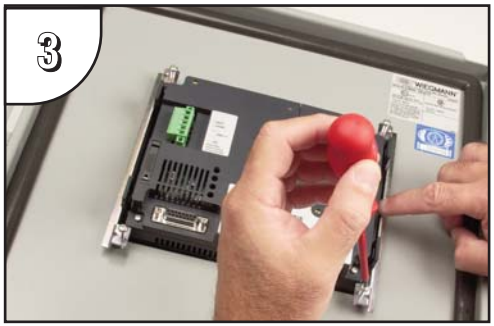

Tighten the mounting screws in an alternating fashion while observing the front of the touch panel. The goal is to make sure the front bezel is pulled up against the enclosure sheet metal uniformly, and the touch panel gasket is fully compressed all the way around its perimeter. Tighten the screws to a torque rating shown in the table below. Avoid over-tightening the screws to the point that they start to deform or bend the mounting clip.

The above photo shows both mounting clips in place and the touch panel secured.

Touch Panel Size	Enclosure Thickness Range	Mounting Clip Screw Torque
6” lower mounting clip position	0.039 - 0.24 inch [1 – 6 mm]	35 ~ 50 oz-in [0.25 ~ 0.35 Nm]
6” upper mounting clip position	0.20 - 0.63 inch [5 – 16 mm]	35 ~ 50 oz-in [0.25 ~ 0.35 Nm]

8–15” Panel Mounting Clip Replacements– EA-BRK-2

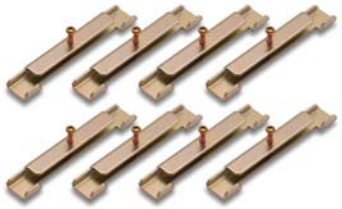

Spare panel mounting clips for the 8 inch through 15 inch *C-more* touch panels. Package of 8 clips with 8 screws.

Installation Instructions

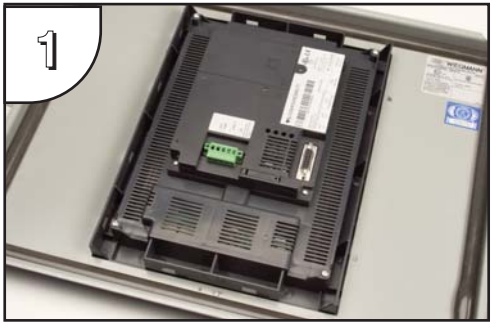

Position the touch panel through the cutout in the control cabinet door and hold in place. The mounting clips are positioned into the slots around the outside edge of the touch panel rear.

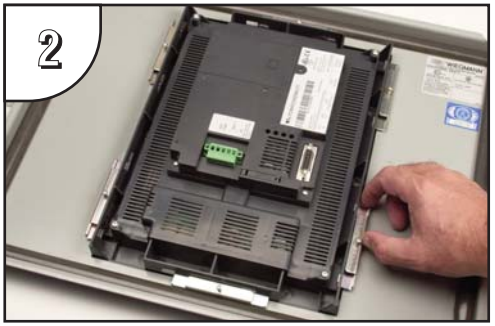

The mounting clips are positioned into the larger portion of the slot at two locations, and then slid toward the smaller portion of the slots to lock them in place. Some slots are arranged to slide to the left and others to the right.

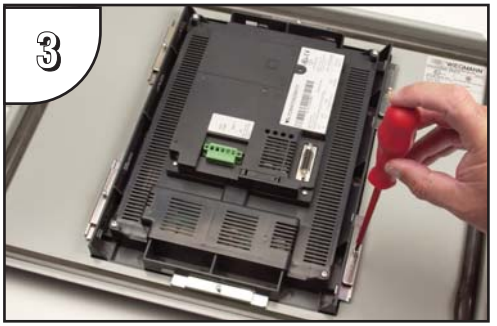

Tighten the mounting screw for each mounting clip in an alternating fashion at all clips while observing the front of the touch panel. The goal is to make sure the front bezel is pulled up against the enclosure sheet metal uniformly, and the touch panel gasket is fully compressed all the way around its perimeter. Tighten the screws to a torque rating shown in the table below. Avoid over-tightening the screws to the point that they start to deform or bend the mounting clip.

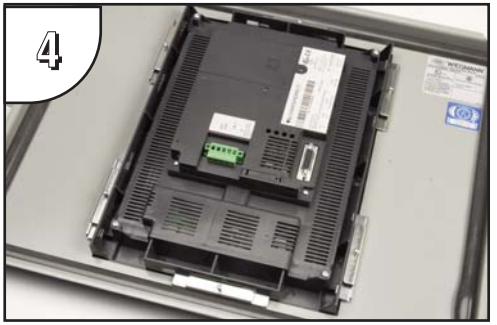

The above photo shows all mounting clips in place and the touch panel secured. The 8”, 10” and 12” touch panels require 6 mounting clips and the 15” touch panel requires 8 mounting clips.

Touch Panel Size	Enclosure Thickness Range	Mounting Clip Screw Torque
6” upper mounting clip position	0.20 - 0.63 inch [5 – 16 mm]	35 ~ 50 oz-in [0.25 ~ 0.35 Nm]

DC Panel Power Connector Replacement – EA-DC-CON

C-more touch panel 5-position DC power connector terminal block replacement. One (1) DC Power Connector is supplied with each touch panel.

Tightening Torque	
Power supply cable torque	71 - 85 oz-in (0.5 - 0.6 Nm)

NOTE: Use 60 / 75 °C copper conductors only.

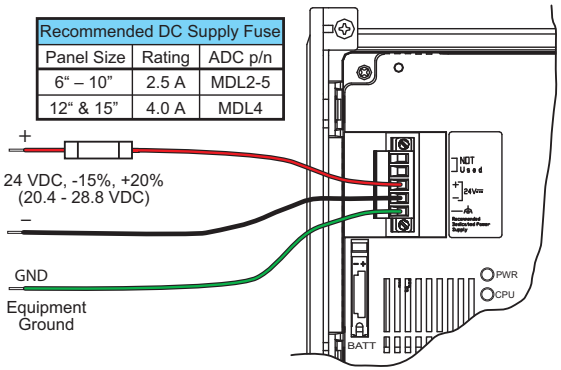

Recommended DC Supply Fuse		
Panel Size	Rating	ADC p/n
6“ – 10”	2.5 A	MDL2-5
12“ & 15”	4.0 A	MDL4

AC Power Adapter Connector Replacement– EA-AC-CON

C-more AC power adapter 3-position AC power connector terminal block replacement. One (1) AC Power Connector is supplied with each AC/DC Power Adapter, EA-AC.

Tightening Torque	
Power supply cable torque	71 - 85 oz-in (0.5 - 0.6 Nm)
Mounting flange screw torque	57 - 71 oz-in (0.4 - 0.5 Nm)

NOTE: Use 60 / 75 °C copper conductors only.

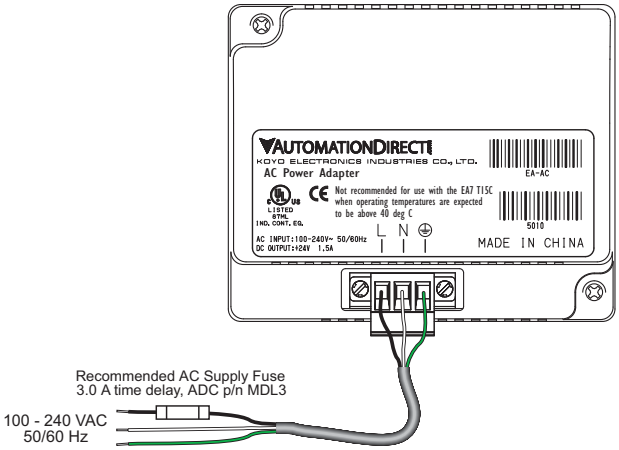

8-15” Panel Backlight Bulb Replacements – EA-xx-BULB

Backlight assembly, customer replaceable, for *C-more* 8”, 10”, 12” and 15” touch panels. The 8”, 10” and 15” touch panels use two bulbs per panel and the 12” touch panels use one bulb per panel. The bulbs are packaged two per box for the 8”, 10” and 15” touch panels and one per box for the 12” touch panels.

(The part number is completed by substituting the panel size, 08, 10, 12 or 15, for the xx shown above.)

Backlight Bulb Installation Instructions Example:

(See the Data Sheet insert for the specific backlight bulb that is being replaced for more detailed information.)

WARNING: This procedure should only be performed by qualified personnel who are experienced in working with electronic equipment. Take the necessary steps to prevent damage from static electricity discharge. Disconnect input power to the touch panel before proceeding. Be careful not to pinch the ribbon cable between the housing and bezel when re-assembling the panel.

9

Preparation: Disconnect input power and all other connections, then remove the touch panel from the control cabinet. In a clean environment, place the panel face down on a lint-free soft surface to prevent scratching the front of the panel.

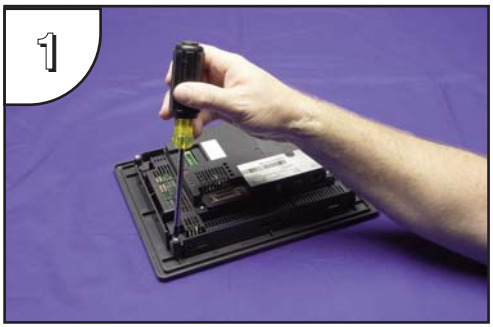

With power disconnected, use a #2 Phillips screwdriver to remove the four outer screws holding the touch panel’s main electronics housing to the front bezel.

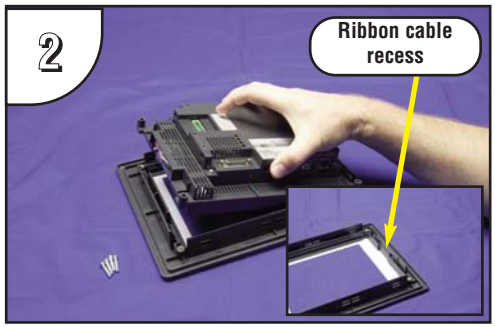

Lift the touch panel’s main electronics housing from the front bezel. Set the front bezel and four screws to the side. Observe the ribbon cable recess on the front bezel (see detail) for use in re-assembling the panel.

Continued on next page.

Backlight Bulb Installation Instructions Example (cont'd):

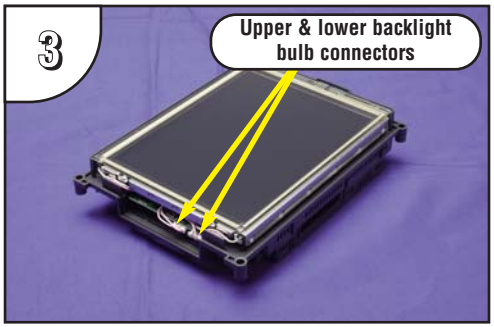

Place the touch panel's main electronics housing facing up on a lint-free soft surface. Position the housing so that the backlight bulb connectors are in plain view.

Carefully lift the bulb's wires out of the wire guides so they are free from obstructions. Do this for both the upper and lower backlight bulbs.

Unplug the backlight bulb's power cable connector from the circuit board connector. Again, do this for both the upper and lower backlight bulbs.

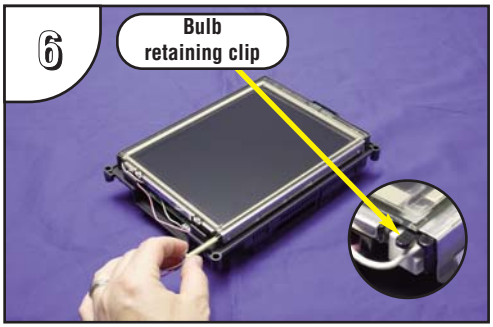

Push up on the bulb retaining clip (see detail) while grasping the plastic end of the bulb assembly and gently slide the bulb from its guide. Do this for both bulbs. The bulb is glass and fragile, so handle with care.

This photo shows the backlight bulb completely removed from its guide in the panel's main electronics housing. (Only one bulb shown.)

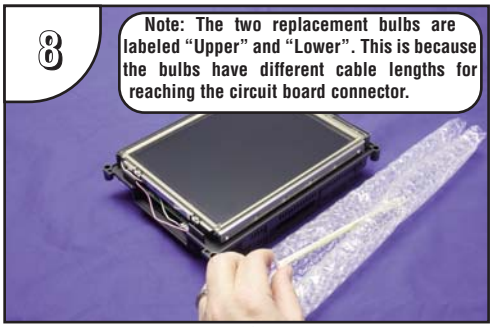

Remove the replacement bulb from its shipping tube and the protective bubble wrap. Note: The replacement bulbs come in pairs and should be replaced in pairs for longevity and maintenance convenience.

Continued on next page.

Backlight Bulb Installation Instructions Example (cont'd):

Position the replacement bulb so that the opening in its three-sided gold colored reflector faces toward the LCD touch screen. Using gentle pressure, slide the bulb into the guide until the retaining clip locks.

Plug each backlight bulb's power cable connector back into its respective circuit board connector.

Gently position each backlight bulb's wires back into their respective wire guides to help clear any obstructions when inserting the panel's main electronics housing back into the front bezel. Position any excess wire length in between the printed circuit board and the LCD to prevent it from becoming pinched between the housing and bezel.

Position the touch panel's main electronics housing into the front bezel so that the flat ribbon cable on the housing aligns with the recess in the front bezel. Insert the four screws and tighten to a maximum of 70 oz-in [0.5 Nm].

6-15” Panel Gasket Replacements – EA-xx-GSK

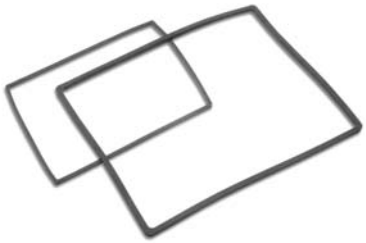

Replacement NEMA 4/4X touch panel gaskets for ***C-more*** 6”, 8”, 10”, 12” and 15” touch panels.

(The part number is completed by substituting the panel size, 06, 08, 10, 12 or 15, for the xx shown above.)

Gasket Replacement Installation Instructions:

Preparation: Disconnect input power and all other connections, then remove the touch panel from the control cabinet. In a clean environment, place the panel face down on a lint-free soft surface to prevent scratching the front of the panel.

Start at one corner and pull the old gasket out of the channel that holds the gasket in place. Pull the gasket up as you work around the entire perimeter of the touch panel. Discard the old gasket.

Lay the new gasket over the channel so that the long and short sides of the gasket match up to the long and short sides of the touch panel. Start at one corner and match the gasket’s corner to the channel’s corner. Press the gasket into the channel and work all away around the perimeter of the touch panel. Re-install the touch panel.

8-15” Panel Bezel Replacement – EA-xx-BEZEL

The NEMA 4/4X bezels used on the *C-more* 8”, 10”, 12” and 15” touch panels can be easily replaced. The replacement bezel includes the clear membrane element that protects the touch sensitive area. A gasket is not included. The bezel and membrane element do not require replacement under normal use. In the event that the clear membrane is scratched from the use of sharp objects or abrasive materials, follow the procedure outlined below to replace the front bezel.

(The part number is completed by substituting the panel size, 08, 10, 12 or 15, for the xx shown above.)

Note: *The bezel on the 6” **C-more** touch panels is not user replaceable and can only be replaced by **AutomationDirect**. Contact the **AutomationDirect** returns department @ 1-800-633-0405 to make arrangements for returning the unit for repair.*

Bezel Replacement Instructions Example:

9

WARNING: This procedure should only be performed by qualified personnel who are experienced in working with electronic equipment. Take the necessary steps to prevent damage from static electricity discharge. Disconnect input power to the touch panel before proceeding. Be careful not to pinch the ribbon cable between the housing and bezel when re-assembling the panel.

Preparation: Disconnect input power and all other connections, then remove the touch panel from the control cabinet. In a clean environment, place the panel face down on a lint-free soft surface to prevent scratching the front of the panel.

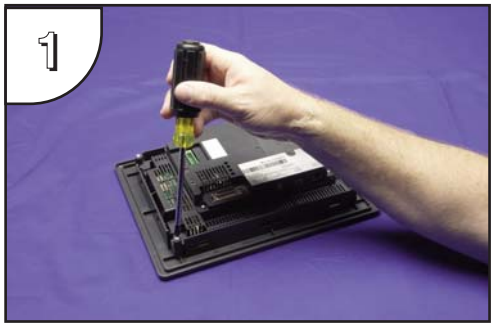

With power disconnected, use a #2 Phillips screwdriver to remove the four outer screws holding the touch panel’s main electronics housing to the front bezel.

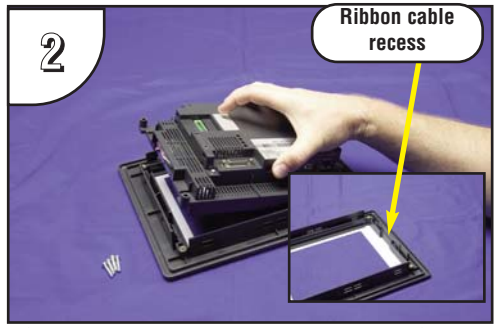

Lift the touch panel’s main electronics housing from the front bezel. Set the four screws to the side and discard the original bezel. Observe the ribbon cable recess on the front bezel (see detail) for use in re-assembling the panel.

Continued on next page.

Bezel Replacement Instructions Example (cont'd):

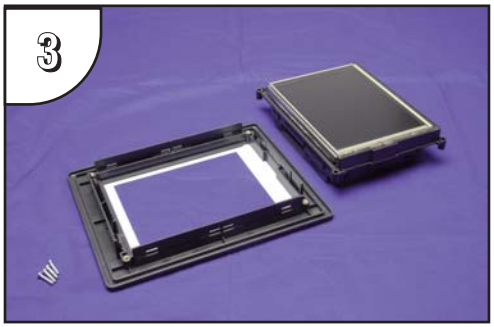

Place the new bezel facing down on the lint-free soft surface along with main electronics and four screws.

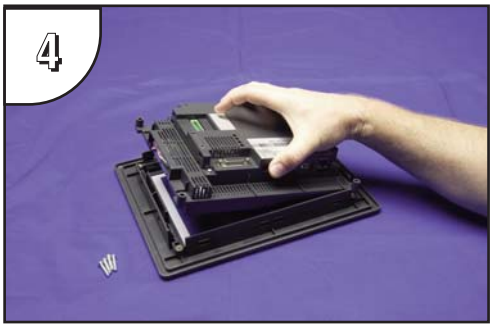

Position the touch panel's main electronics housing into the new bezel so that the flat ribbon cable on the housing matches up with the recess in the front bezel. Insert the four screws and tighten to a maximum of 70 oz-in [0.5 Nm].

6” Adapter Plate Gasket Replacement – EA-6-ADPTR-GSK

6-inch replacement NEMA 4/4X gasket for the *C-more* touch panel adapter plate.

6” Adapter Plate Gasket Replacement Instructions:

Preparation: Disconnect input power and all other connections, remove the touch panel from the 6” adapter plate, and then remove the adapter plate from the control cabinet by removing the six (6) screws that secure the adapter to the control cabinet. In a clean environment, place the adapter plate face down on a lint-free soft surface to prevent scratching the adapter plate.

Start at one corner and pull the old gasket out of the channel that holds the gasket in place. Pull the gasket up as you work around the entire perimeter of the adapter plate. Discard the old gasket.

Lay the new gasket over the channel so that the long and short sides of the gasket match up to the long and short sides of the adapter plate. Start at one corner and match the gasket’s corner to the channel’s corner. Press the gasket into the channel and work all away around the perimeter of the adapter plate. Re-install the adapter plate and then the touch panel.

Panel & PLC Error Code Tables

Appendix A

In This Appendix...

Introduction A-2

C-more Touch Panel Error Code Table A-3

DirectLOGIC – Panel Error Code PLC-499 Explanation A-5

DirectLOGIC K-Sequence Protocol – PLC Error Code Table A-5

DirectLOGIC DirectNET Protocol – PLC Error Codes A-5

Modbus Protocols Error Code P499 Explanation A-6

AutomationDirect CLICK A-6

AutomationDirect DirectLOGIC - Modbus (Koyo) A-6

Modicon Modbus RTU A-6

Entivity Modbus RTU A-6

DirectLOGIC ECOM Protocol – PLC Error Codes A-6

Allen-Bradley – Panel Error Code PLC-499 Explanation A-7

Allen-Bradley DF1 & DH485 Protocols – PLC Error Code Tables A-8

Allen-Bradley EtherNet/IP Protocol –Panel Error Code PLC-496, 497 and 498 Explanation A-10

Allen-Bradley – EtherNet/IP Protocol – PLC Error Code TablesControlLogix, CompactLogix, & FlexLogix A-11

Allen-Bradley – EtherNet/IP Protocol – PLC Error Code TablesMicroLogix 1100, 1400 & SLC 5/05, both via native Ethernet port;MicroLogix 1000, 1100, 1200, 1400, 1500, SLC 5/03/04/05, all via ENI Adapter A-15

Generic EtherNet IP Protocol – PLC Error Codes A-20

GE 90-30 – Panel Error Code PLC-499 Explanation A-21

GE 90-30 SNPX Protocol – PLC Error Code Tables A-22

Mitsubishi FX Protocol – PLC Error Codes A-31

Panel & PLC Error Code Tables

Appendix A

Omron – Panel Error Code PLC-499 Explanation A-31
Omron Host Link Protocol – PLC Error Code Table A-32
Omron FINS Protocol – PLC Error Code Table A-33
Omron – Panel Error Code P495 Explanation A-36
Omron CS/CJ FINS Ethernet Protocol – PLC Error Code Table A-37
Siemens – Panel Error Code P499 Explanation A-38
Siemens PPI Protocol – PLC Error Code Table A-39
Siemens ISO over TCP Protocol – PLC Error Code Table A-40

This page intentionally left blank

Introduction

The *C-more* family of touch panels is capable of communicating with a wide variety of Programmable Logic Controllers. *C-more* is capable of communicating over RS232, RS422 and RS485 serial networks as well as Ethernet networks. It communicates with all AutomationDirect PLCs utilizing various protocols. *C-more* also communicates with other brands of PLCs by their different protocols. For a complete list of PLCs and protocols, see the table on page 16 of **Chapter 1: Getting Started**.

As with any network communications, errors will occur. To make it more simple for the user to identify the cause of the possible error, we have provided a error code table for all of the possible errors that *C-more* can detect.

If a *C-more* communications error does occur, the error message will appear across the top of the screen. The *C-more* touch panel also monitors any errors that are generated by the various PLCs that are connected to it. If any of the PLC generated errors are detected, they are displayed across the top of the panel's display embedded as a hexadecimal value in error code P499's message. An explanation of how the specific PLC error is identified in the panel error code P499 is shown proceeding the specific manufacturer's PLC error tables. How the hexadecimal error code value is interrupted is slightly different between manufacturers, so it is important to check the explanation at the beginning of each manufacturer's tables.

8

Note: *These PLC error codes are provided by the manufacturer of the related PLC and are subject to change by the PLC manufacturer. Please refer to the manufacturers documentation for a more complete and up-to-date list of error codes.*

All errors are also logged into the panel's **Error** log under the **Information** tab in the panel's **System Setup Screens** and are identified by the error code number. See **Chapter 5: System Setup Screens** for additional details.

If you have difficulty determining the cause of the error, please refer to **Chapter 8: Troubleshooting** for some troubleshooting tips or contact our technical support group at 770-844-4200 or the 3rd party PLC manufacturer.

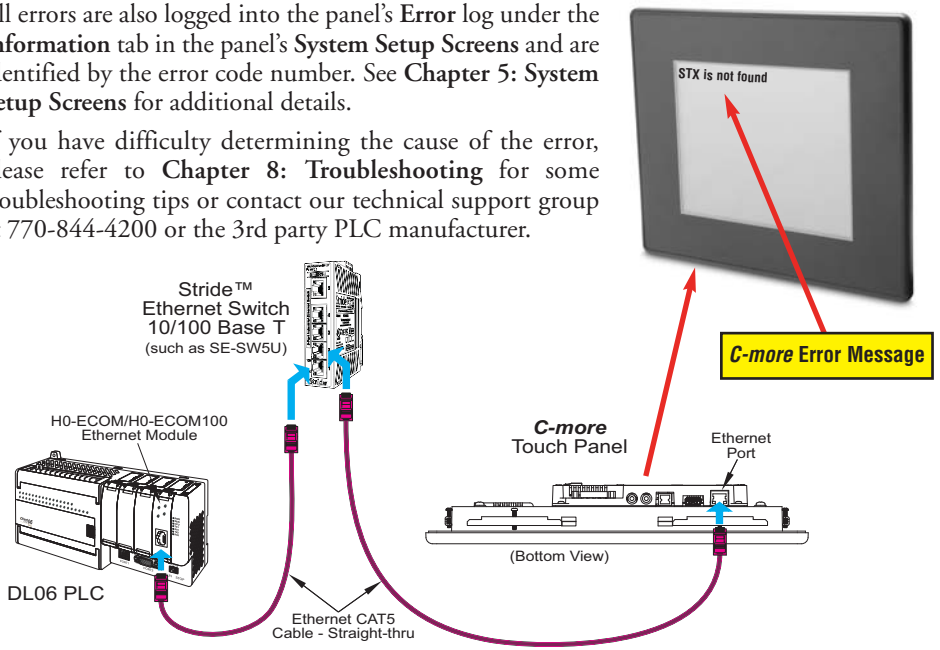

C-more Touch Panel Error Code Table

The following table includes all of the error codes and error messages that the panel will display if the listed cause is detected. All of these errors involve problems that could result with the panel communicating with the connected PLC. Be aware that not all of the panel errors are used with each type of PLC that can be connected to the panel.

C-more Touch Panel Error Code Table		
Error Code	**Error Message**	**Cause**
PLC-001	PLC Communication Timeout (for single PLC) %Device% PLC Communication Timeout (for multiple PLCs, such as RS-422/485)	A timeout occurred after sending a request to the PLC %Device%. %Device% indicates the device name, such as DEV001. Example error message for multiple PLCs: DEV001 PLC Communication Timeout.
PLC-002	NAK received from PLC	A negative acknowledgement (NAK) control code has been generated during a read/write request.
PLC-003	EOT received from PLC	An End of Transmission (EOT) control code is sent by the PLC in response to a Read/Write/SetBit request..
PLC-004	STX is not found	A Start of Text (STX) control code was not found in the data packet received from the PLC.
PLC-005	ETX or ETB is not found	Neither an End of Text (ETX) nor an End of Transmission Block (ETB) control code was found in the data packet received from the PLC.
PLC-006	LRC does not match	There was an incorrect Longitudinal Redundancy Check (LRC) control code in the communications packet received from the PLC. This is an indication that the data in the packet is corrupted.
PLC-007	CRC does not match	There was an incorrect Cyclic Redundancy Check (CRC) control code in the communications packet received from the PLC. This is an indication that the data in the packet is corrupted.
PLC-008	Address does not match	The address value returned in the data packet from the PLC is incorrect.
PLC-009	Different function code received from PLC	The function code returned in the data packet from the PLC is incorrect.
PLC-010	Data size does not match	There are an incorrect number of bytes found in the data packet returned from the PLC.
PLC-011	Invalid value in function code	There is an invalid value in the function code.
PLC-012	Invalid command sent to PLC	There was an invalid command sent to the PLC that wasn't recognized by the PLC.
PLC-013	ENQ received from PLC	If the data packet does not include a negative acknowledgement (NAK - 0x15 value) in the defined packet field, then an enquiry (ENQ) control code error will be displayed.
PLC-014	Transaction ID does not match	This error will be displayed if after checking the Transaction ID Bytes in the data packet, there is no match to what was requested.
PLC-015	%Device% No device found	A PLC device designated as %Device% could not be found.
PLC-016	Data byte communication error	0 byte of data is recieved
PLC-017	Out of address range	The touch panel requested a file number larger than 255.
PLC-018	Panel communication timeout	The server panel did not respond when using the Panel Pass Through.
PLC-019	Found in parity error by hardware	An error detected in the PLC memory.
PLC-020	Can't open serial port	Cannot open the Serial Port. If this error shows on the panel, it indicates a hardware problem.
PLC-021	PLC number does not match	The PLC number does not match the PLC number configured.
PLC-022	Can't reset DCB	Unable to reset the data communication bit.
PLC-023	Cable not connected properly	Communication cable incorrectly installed.

C-more Touch Panel Error Code Table continued on the next page.

C-more Touch Panel Error Code Table (cont'd)

C-more Touch Panel Error Code Table (cont'd)		
Error Code	**Error Message**	**Cause**
PLC-024	Cannot detect other devices on network	The panel is not communicating with other devices on the network.
PLC-025	Panel not in polling list	
PLC-026	PLC connection timeout	A timeout occured after sending a request to the PLC.
PLC-027	Memory type incorrect	
PLC-028	PLC failed to respond	The PLC failed to respond after sending a request to the PLC.
PLC-495	**Omron Ethernet Error**	**An error code specific to Omron Ethernet with a Value of XXXX has been returned from the PLC. See the explanation for error code PLC-495 proceeding the Omron CS/CJ FINS Ethernet error code tables.**
PLC-496	**Error code 0xaaaaaaaa returned from PLC**	**Allen-Bradley EtherNET/IP specific. Encapsulation Error. See the explanation for error code PLC-496 proceeding the Allen-Bradley EtherNet/IP error code tables.**
PLC-497	**Error code 0xaaaaaaaa returned from PLC**	**Allen-Bradley EtherNET/IP specific. CIP Error. See the explanation for error code PLC-497 proceeding the Allen-Bradley EtherNet/IP error code tables.**
PLC-498	**Error code 0xaaaaaaaa returned from PLC**	**Allen-Bradley EtherNET/IP specific. Service Packet Error. See the explanation for error code PLC-498 proceeding the Allen-Bradley EtherNet/IP error code tables.**
PLC-499	**Error code XXXX returned from PLC**	**An error code with a value of XXXX has been returned from the PLC. See the explanation for error code PLC-499 below for *Direct*LOGIC and proceeding each set of PLC error code tables that use this error code.**
PLC-500	Cannot write to Serial Port	Data cannot write to the Serial port. Data was sent to the PLC via the Serial Port. If this error shows on the Panel, it indicates a Hardware Problem.
PLC-700	Not enough buffer memory	There was an error while allocating memory for the read buffer. When this error is displayed, a memory leak may have occurred.
PLC-701	Access to inaccessible PLC memory	Request to inaccessible memory from the HMI layer to the PLC protocol layer. This error is an indication that there is a problem in the HMI layer.
PLC-702	Cannot access by different function code	A Read/Write/SetBit request has been sent to an invalid memory area. This error is an indication that there is a problem in the HMI layer.
PLC-703	Write request to PLC Read Only Memory	A PLC Write request was made to the PLC's Read-Only memory area.This error is an indication that there is a problem in the HMI layer or the PLC protocol layer.
PLC-704	Bad device-access	No device (PLC) exists in the server panel or the device name does not match between the server and client when using the Panel Pass Through.
PLC-705	Protocol does not match	The protocol for the device does Not match between the server and client when using the panel pass through.

*Direct*LOGIC – Panel Error Code PLC-499 Explanation

The PLC-499 error code is used to show any errors that are generated by the connected PLC. The PLC-499 error message includes a four digit hexadecimal value embedded in the message. This value can be looked up in the specific PLC's error tables to determine the cause of the error. The possible PLC generated error codes for the *Direct*LOGIC communication protocol are represented by a hexadecimal value as shown in the following message example.

*Direct*LOGIC Error Code PLC-499 Message Example:

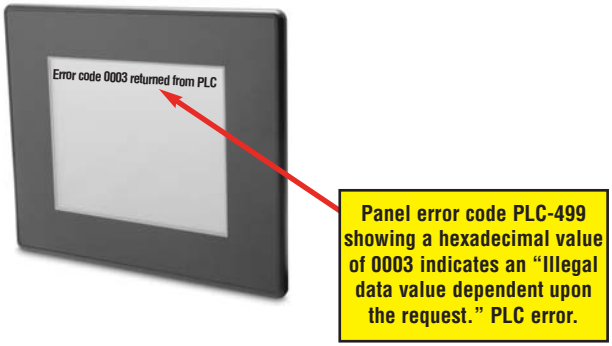

8

*Direct*LOGIC K-Sequence Protocol – PLC Error Code Table

The following table lists the errors that can be generated by the *Direct*LOGIC PLC when using the K-Sequence protocol.

PLC Error Codes for *Direct*LOGIC – K-Sequence	
Panel Error Code PLC-499 Hex Value	**Description**
01F8	Error setting value.
020D	Error in key mode.
021C	Password protected.

Note: *The following errors can be generated from the designated PLC, are monitored by the* ***C-more*** *touch panel, and displayed on the touch panel's screen as a hexadecimal value in panel error code PLC-499 message, if active. Please refer to the PLC manufacturer's documentation for additional information.*

*Direct*LOGIC *Direct*NET Protocol – PLC Error Codes

Only errors as listed in the Touch Panel Error Code Table shown on page A-3 can occur when using the *Direct*LOGIC *Direct*NET protocol, there are no PLC generated errors.

*Direct*LOGIC error code tables continued on the next page.

Modbus Protocols Error Code P499 Explanation

The following table lists the errors that can be generated by the Modbus protocols:

AutomationDirect CLICK

AutomationDirect DirectLOGIC - Modbus (Koyo)

Modicon Modbus RTU

Entivity Modbus RTU

Note: *The following errors can be generated from the designated PLC, are monitored by the* ***C-more*** *touch panel, and displayed on the touch panel's screen as a hexadecimal value in panel error code PLC-499 message, if active. Please refer to the PLC manufacturer's documentation for additional information.*

PLC Error Codes Modbus Protocols		
Panel Error Code P499 Hex Value	**Name**	**Meaning**
0x0001	ILLEGAL FUNCTION	The function code received in the query is not an allowable action for the server (or slave). This may be because the function code is only applicable to newer devices and was not implemented in the unit selected. It could also indicate that the server (or slave) is in the wrong state to process a request of this type, for example because it is unconfigured and is being asked to return registered values.
0x0002	ILLEGAL DATA ADDRESS	The data address received in the query is not an allowable address for the server (or slave). More specifically, the combination of reference number and transfer length is invalid. For a controller with 100 registers, the PDU addresses the first register as 0, and the last one as 99. If a request is submitted with a starting register address of 96 and a quantity of registers of 4, then the request will successfully operate (address-wise at least) on registers 96, 97, 98, 99. If a request is submitted with a starting register of 96 and a quantity of registers of 5, then the request will fail with Exception code 0x02 "Illegal Data Address" since it attempts to operate on registers 96, 97, 98, 99 and 100, and there is no register with address 100.
0x0003	ILLEGAL DATA VALUE	A value contained in the query data field is not an allowable value for server (or slave). This indicates a fault in the structure of the remainder of a complex request, such as that the implied length is incorrect. It specifically does NOT mean that a data item submitted for storage in a register has a value outside the expectation of the application program, since the Modbus protocol is unaware of the significance of any particular value of any particular register.
0x0004	SLAVE DEVICE FAILURE	An unrecoverable error occurred while the server (or slave) was attempting to perform the requested action.

*Direct*LOGIC ECOM Protocol – PLC Error Codes

Only errors as listed in the Touch Panel Error Code Table shown on page A-3 can occur when using the *Direct*LOGIC ECOM protocol, there are no PLC generated errors.

Allen-Bradley – Panel Error Code PLC-499 Explanation

The PLC-499 error code is used to show any errors that are generated by the connected PLC. The PLC-499 error message includes a four digit hexadecimal value embedded in the message. This value can be looked up in the specific PLC's error tables to determine the cause of the error. The possible PLC generated error codes for the Allen-Bradley DF1 and DH485 communication protocols are represented by a hexadecimal value as shown in the following diagram. Please note that the error code is broken down into three sections. It is possible for more than one type of PLC error to be displayed in this value.

Allen-Bradley Error Code PLC-499 Message Example:

AB DF1 and DH485 Protocol Error Code PLC-499 Breakdown

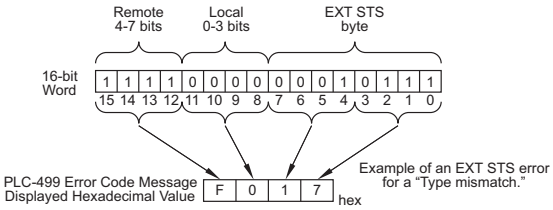

AB DF1 and DH485 Protocol – Multiple Error Code Examples

	Example 1	Example 2	Example 3
Remote 4-7 bits	F x x x	1 x x x	F x x x
+			
Local 0-3 bits	x 0 x x	x 1 x x	x 1 x x
+			
EXT STS byte	x x 0 9	x x 0 0	x x 0 9
=			
Error PLC-499 Value Displayed	F 0 0 9	1 1 0 0	F 1 0 9

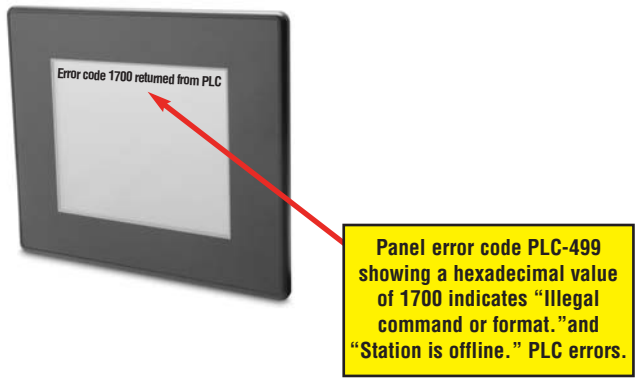

Allen-Bradley DF1 & DH485 Protocols – PLC Error Code Tables

The following PLC error code tables cover possible errors that are detected by the panel from Allen-Bradley PLCs using the DF1 and DH485 protocols. DF1 includes full and half duplex communications for the MicroLogix 1000, 1100. 1200, 1400, 1500, SLC 5/03, /04, /05, ControlLogix, CompactLogix and FlexLogix, and full duplex communications for the PLC5. DH485 includes all MicroLogix and SLC500 PLC's and any communication connection using an Allen-Bradley AIC device using the DH485 protocol.

Note: *The following errors can be generated from the designated PLC, are monitored by the* ***C-more*** *touch panel, and displayed on the touch panel's screen as a hexadecimal value in panel error code PLC-499 message, if active. Please refer to the PLC manufacturer's documentation for additional information.*

PLC Errors for Allen-Bradley DF1 and DH485 Protocols, Local STS Errors (0-3 bits)	
Panel Error Code PLC-499 Hex Value	**Description**
0x0	Success; no error.
0x1	DST node is out of buffer space.
0x2	Cannot guarantee delivery; link layer. (The remote node specified does not ACK command.)
0x3	Duplicate token holder detected.
0x4	Local port is disconnected.
0x5	Application layer timed out waiting for response.
0x6	Duplicate node detected.
0x7	Station is offline.
0x8	Hardware fault.

PLC Errors for Allen-Bradley DF1 and DH485 Protocols, Remote STS Errors (4-7 bits)	
Panel Error Code PLC-499 Hex Value	**Description**
0x0	Success; no error.
0x10	Illegal command or format.
0x20	Host has a problem and will not communicate.
0x30	Remote node host is missing, disconnected, or shut down.
0x40	Host could not complete function due to hardware fault.
0x50	Addressing problem or memory protect rungs.
0x60	Function not allowed due to command protection selection.
0x70	Processor is in Program Mode.
0x80	Compatibility mode file missing or communication zone problem.
0x90	Remote node cannot buffer command.
0xA0	Wait ACK (1775 KA buffer full).
0xB0	Remote node problem due to download.
0xC0	Wait ACK (1775 KA buffer full).
0xD0	not used
0xE0	not used
0xF0	**Error code in the EXT STS byte. See the error code table on the next page.**

(PLC generated error codes for the Allen-Bradley DF1 protocol continued on the next page.)

Allen-Bradley DF1 & DH485 Protocols – PLC Error Code Tables

PLC Errors for Allen-Bradley DF1 and DH485 Protocols, EXT STS Command Code for F0 Command	
Panel Error Code PLC-499 Hex Value	**Description**
0x0	not used
0x1	A field has an illegal value.
0x2	Fewer levels specified in address than minimum for any address.
0x3	More levels specified in address than system supports.
0x4	Symbol not found.
0x5	Symbol is of improper format.
0x6	Address does not point to something usable.
0x7	File is wrong size.
0x8	Cannot complete request; situation has changed since start of the command.
0x9	Data or file size is too large.
0xA	Transaction size plus word address is too large.
0xB	Access denied; improper privilege.
0xC	Condition cannot be generated; resource is not available.
0xD	Condition already exists; resource is readily available.
0xE	Command cannot be executed.
0xF	Histogram overflow.
0x10	No access.
0x11	Illegal data type.
0x12	Invalid parameter or invalid data.
0x13	Address reference exists to deleted area.
0x14	Command execution failure for unknown reason; possible PLC 3 histogram overflow.
0x15	Data conversion error.
0x16	Scanner not able to communicate with 1771 rack adapter.
0x17	Type mismatch.
0x18	1771 module response was not valid.
0x19	Duplicated label.
0x22	Remote rack fault.
0x23	Timeout.
0x24	Unknown error.
0x1A	File is open; another node owns it.
0x1B	Another node is the program owner.
0x1C	Disk File is write protectid or otherwise unavailable
0x1D	Disk File is being used by another application. Update not performed (offline only).
0x1E	Data table element protection violation.
0x1F	Temporary internal problem.

Allen-Bradley EtherNet/IP Protocol – Panel Error Code PLC-496, 497 and 498 Explanation

The PLC-496, PLC-497, and PLC-498 error codes are used to show any errors that are generated by the connected PLC. These error messages include an eight digit hexadecimal value displayed embedded in the message. This value can be looked up in the specific PLC's error tables to determine the cause of the error. The possible PLC generated error codes for the Allen-Bradley EtherNet/IP communication protocol is represented by a hexadecimal value as shown in the following message example.

Allen-Bradley Error Code PLC-496, 497, 498 Message Example:

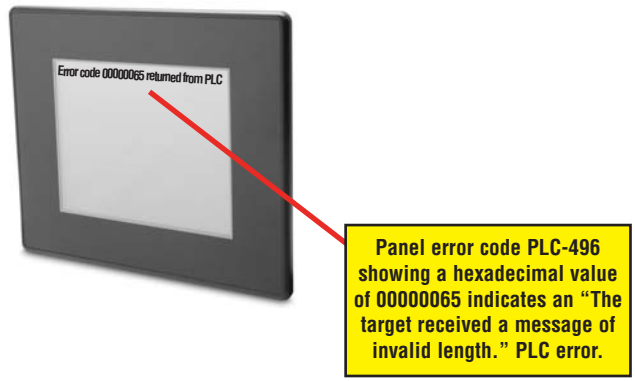

Allen-Bradley – EtherNet/IP Protocol – PLC Error Code Tables ControlLogix, CompactLogix, & FlexLogix

The following PLC error code tables cover possible errors that are detected by the panel from Allen-Bradley PLCs using the EtherNet/IP protocol. This includes all ControlLogix, CompactLogix and FlexLogix PLCs.

Note: *The following errors can be generated from the designated PLC, are monitored by the* ***C-more*** *touch panel, and displayed on the touch panel's screen as a hexadecimal value in panel error code PLC-496 message, if active. Please refer to the PLC manufacturer's documentation for additional information.*

PLC Errors for Allen-Bradley EtherNet/IP Protocol –Encapsulation Errors (Error code 0xaaaaaaaa returned from the PLC.)	
Panel Error Code PLC-496 Hex Value	**Description**
0x00000001	The sender issued an invalid or unsupported encapsulation command.
0x00000002	Insufficient memory resources in the receiver to handle the command. You can get this error if the 1761-NET-ENI cannot connect to the PLC serially.
0x00000003	Poorly formed or incorrect data in the data portion of the encapsulation message.
0x00000004 - 0x00000063	Reserved for legacy (Rockwell Automation).
0x00000064	An orginator used an invalid session handle when sending an encapsulation message to the target.
0x00000065	The target received a message of invalid length.
0x00000066 - 0x00000068	Reserved for legacy (Rockwell Automation).
0x00000069	Unsupported encapsulation protocol revision.
0x0000006a - 0x0000ffff	Reserved for future expansion.

PLC Errors for Allen-Bradley EtherNet/IP Protocol – CIP Errors (Error code 0xaaaaaaaa returned from the PLC.)	
Panel Error Code PLC-497 Hex Value	**Description**
0x010100	Connection Manager: Connection in Use or Duplicate Forward Open.
0x010103	Connection Manager: Transport Class and Trigger combination not supported.
0x010106	Connection Manager: Ownership Conflict.
0x010107	Connection Manager: Connection not found at target application.
0x010108	Connection Manager: Invalid connection type (problem with type or priority).
0x010109	Connection Manager: Invalid connection size.
0x010110	Connection Manager: Device not configured.
0x010111	Connection Manager: RPI not supported. Could also be problem with inactivity timeout.
0x010113	Connection Manager: Connection Manager cannot support any more connections.
0x010114	Connection Manager: Either the vendor ID or the Product Code in the key segment did not match the device.
0x010115	Connection Manager: Product Type in the key segment did not match the device.
0x010116	Connection Manager: Major or minor revision information in the key segment did not match the device.

(PLC generated error codes for the Allen-Bradley EtherNet/IP protocol for ControlLogix, CompactLogix, and FlexLogix continued on the next page.)

Allen-Bradley – EtherNet/IP Protocol – PLC Error Code Tables ControlLogix, CompactLogix, & FlexLogix (cont'd)

PLC Errors for Allen-Bradley EtherNet/IP Protocol – CIP Errors (Error code 0xaaaaaaaa returned from the PLC.)	
Panel Error Code PLC-497 Hex Value	**Description**
0x010117	Connection Manager: Invalid connection point.
0x010118	Connection Manager: Invalid configuration format.
0x010119	Connection Manager: Connection request fails since there is no controlling connection currently open.
0x01011a	Connection Manager: Target application cannot support any more connections.
0x01011b	Connection Manager: RPI is smaller than the Production Inhibit Time.
0x010203	Connection Manager: Connection cannot be closed since the connection has timed out.
0x010204	Connection Manager: Unconnected Send timed out waiting for a response.
0x010205	Connection Manager: Parameter error in Unconnected send service.
0x010206	Connection Manager: Message too large for Unconnected message service.
0x010207	Connection Manager: Unconnected acknowledge without reply.
0x010301	Connection Manager: No buffer memory available.
0x010302	Connection Manager: Network Bandwidth not available for data.
0x010303	Connection Manager: No Tag filters available.
0x010304	Connection Manager: Not configured to send real-time data.
0x010311	Connection Manager: Port specified in Port segment not available.
0x010312	Connection Manager: Link address specified in port segment not available.
0x010315	Connection Manager: invalid segment type or segment value in path.
0x010316	Connection Manager: Path and Connection not equal in close.
0x010317	Connection Manager: Ether Segment not present or Encoded Value in Network Segment is invalid.
0x010318	Connection Manager: Link address to self invalid.
0x010319	Connection Manager: Resources on Secondary unavailable.
0x01031a	Connection Manager: Connection already established.
0x01031b	Connection Manager: Direct connection already established.
0x01031c	Connection Manager: Miscellaneous.
0x01031d	Connection Manager: Redundant connection mismatch.
0x01031e	Connection Manager: No more consumer resources available in the producing module.
0x01031f	Connection Manager: No connection resources exist for target path.
0x010320 - 0x0107ff	Connection Manager: Vendor specific.
0x020000	Resource unavailable: Connection Manager resources are unavailable to handle service request.
0x030000	Invalid parameter value.
0x040000	Path segment error: The path segment identifier or the segment syntax was not understood by the processing node.
0x050000	Path destination unknown: The path is referencing an object class, instance or structure element that is not known or is not contained in the processing node.
0x060000	Partial transfer: Only part of the expected data was transferred.
0x070000	Connection lost: The messaging connection was lost.

(PLC generated error codes for the Allen-Bradley EtherNet/IP protocol for ControlLogix, CompactLogix, and FlexLogix continued on the next page.)

Allen-Bradley – EtherNet/IP Protocol – PLC Error Code Tables ControlLogix, CompactLogix, & FlexLogix (cont'd)

PLC Errors for Allen-Bradley EtherNet/IP Protocol – CIP Errors (Error code 0xaaaaaaaa returned from the PLC.)	
Panel Error Code PLC-497 Hex Value	**Description**
0x080000	Service not supported: The requested service was not implemented or was not defined for this Object Class/Instance.
0x090000	Invalid attribute value: Invalid attribute data detected.
0x0a0000	Attribute list error: An attribute in the Get_Attribute_List or Set_Attribute_List response has a non-zero status.
0x0b0000	Already in requested mode/state: The object is already in the mode/state being requested by the service.
0x0c0000	Object state conflict: The object cannot perform the requested service in its current mode/state.
0x0d0000	Object already exists: The requested instance of object to be created already exists.
0x0e0000	Attribute not settable: A request to modify non-modifiable attribute was received.
0x0f0000	Privilege violation: A permission/privilege check failed.
0x100000	Device state conflict: The device's current mode/state prohibits the execution of the requested service.
0x110000	Reply data too large: The data to be transmitted in the response buffer is larger than the allocated response buffer.
0x120000	Fragmentation of a primitive value: The service specified an operation that is going to fragment a primitive data value. For example, trying to send a 2 byte value to a REAL data type (4 byte).
0x130000	Not enough data: The service did not supply enough data to perform the specified operation.
0x140000	Attribute not supported: The attribute specified in the request is not supported.
0x150000	Too much data: The service supplied more data than was expected.
0x160000	Object does not exist: The object specified does not exist in the device.
0x170000	Service fragmentation sequence not in progress: The fragmentation sequence for this service is not currently active for this data.
0x180000	No stored attribute data: The attribute data of this object was no saved prior to the requested service.
0x190000	Store operation failure: The attribute data of this object was not saved due to a failure during the attempt.
0x1a0000	Routing failure, request packet too large: The service request packet was too large for transmission on a network in the path to the destination.
0x1b0000	Routing failure, response packet too large: The service reponse packet was too large for transmission on a network in the path from the destination.
0x1c0000	Missing attribute list entry data: The service did not supply an attribute in a list of attributes that was needed by the service to perform the requested behavior.
0x1d0000	Invalid attribute value list: The service is returning the list of attributes supplied with status information for those attributes that were invalid.
0x1e0000	Embedded service error: See Service Packet error list (PLC-498 Error codes) below:
0x1f0000	Vendor specific error: A vendor specific error has been encountered. This occurs when none of the specified errors relate to the error in the device.
0x200000	Invalid parameter: A parameter associated with the request was invalid. This code is used when a parameter does meet the requirements defined in an Application Object specification.
0x210000	Write-once value or medium already written: An attempt was made to write to a write-once-medium that has already been written or to modify a value that cannot be change once established.
0x220000	Invalid Reply Received: An invalid reply is received (example: service code sent doesn't match service code received.).

(PLC generated error codes for the Allen-Bradley EtherNet/IP protocol for ControlLogix, CompactLogix and FlexLogix continued on the next page.)

Allen-Bradley – EtherNet/IP Protocol – PLC Error Code Tables ControlLogix, CompactLogix, & FlexLogix (cont'd)

PLC Errors for Allen-Bradley EtherNet/IP Protocol – CIP Errors (Error code 0xaaaaaaaa returned from the PLC.)	
Panel Error Code PLC-497 Hex Value	**Description**
0x230000	Reserved by CIP for future extensions.
0x240000	Reserved by CIP for future extensions.
0x250000	Key failure in path: The key segment was included as the first segment in the path does not match the destination module. The object specific status shall indicate which part of the key check failed.
0x260000	Path Size Invalid: The size of the path which was sent with the Service Request is either not large enough to allow the Request to be routed to an object or too much routing data was included.
0x270000	Unexpected attribute in list: An attempt was made to set an attribute that is not able to be set at this time.
0x280000	Invalid Member ID: The Member ID specified in the request does not exist in the specified Class/Instance/Attribute.
0x290000	Member not settable: A request to modify a non-modifiable member was received.
0x2a0000	Group 2 only server general failure: This error code may only be reported by DeviceNet group 2 only servers with 4K or less code space and only in place of Service not supported, Attribute not supported and Attribute not settable.
0x2b0000 - 0xcf0000	Reserved by CIP for future extensions.
0xd00000 - 0xff0000	Reserved for Object Class and service errors: This range of error codes is to be used to indicate Object Class specific errors. Use of this range should only be used when errors in this table don't accurately reflect the error encountered.

PLC Errors for Allen-Bradley EtherNet/IP Protocol – Service Packet Errors (Error code 0xaaaaaaaa returned from the PLC.)	
Panel Error Code PLC-498 Hex Value	**Description**
0x040000	This general status codes that the tag name could not be deciphered. This could mean that the tag name was entered incorrectly or does not exist in the PLC.
0x050000	The particular item referenced (usually instance) could not be found.
0x060000	The amount of data requested would not fit into the response buffer. Partial data transfer has occurred.
0x0a0000	An error has occurred trying to process one of the attributes.
0x130000	Not enough command data/parameters were supplied in the command to execute the service requested.
0x1c0000	An insufficient number of attributes were provided compared to the attribute count.
0x260000	The tag name length specified did not match what was in the message.
0xff0521	You have tried to access beyond the end of the data object.
0xff0721	The abbreviated type does not match the data type of the data object.
0xff0421	The beginning offset was beyond the end of the template.

Allen-Bradley – EtherNet/IP Protocol – PLC Error Code Tables MicroLogix 1100, 1400 & SLC 5/05, both via native Ethernet port; MicroLogix 1000, 1100, 1200, 1400, 1500, SLC 5/03/04/05, all via ENI Adapter

The following PLC error code tables cover possible errors that are detected by the panel from Allen-Bradley PLCs using the EtherNet/IP protocol. This includes MicroLogix 1100, 1400 & SLC 5/05, both using their native Ethernet port, and MicroLogix 1000, 1100, 1200, 1400, 1500, SLC 5/03, 5/04 and 5/05 using an Allen-Bradly ENI Adapter.

Note: *The following errors can be generated from the designated PLC, are monitored by the* ***C-more*** *touch panel, and displayed on the touch panel's screen as a hexadecimal value in panel error code PLC-496 message, if active. Please refer to the PLC manufacturer's documentation for additional information.*

PLC Errors for Allen-Bradley EtherNet/IP Protocol –Encapsulation Errors (Error code 0xaaaaaaaa returned from the PLC.)	
Panel Error Code PLC-496 Hex Value	**Description**
0x00000001	The sender issued an invalid or unsupported encapsulation command.
0x00000002	Insufficient memory resources in the receiver to handle the command. You can get this error if the 1761-NET-ENI cannot connect to the PLC serially.
0x00000003	Poorly formed or incorrect data in the data portion of the encapsulation message.
0x00000004 - 0x00000063	Reserved for legacy (Rockwell Automation).
0x00000064	An orginator used an invalid session handle when sending an encapsulation message to the target.
0x00000065	The target received a message of invalid length.
0x00000066 - 0x00000068	Reserved for legacy (Rockwell Automation).
0x00000069	Unsupported encapsulation protocol revision.
0x0000006a - 0x0000ffff	Reserved for future expansion.

PLC Errors for Allen-Bradley EtherNet/IP Protocol – CIP Errors (Error code 0xaabbbb returned from the PLC.)	
Panel Error Code PLC-497 Hex Value	**Description**
0x010100	Connection Manager: Connection in Use or Duplicate Forward Open.
0x010103	Connection Manager: Transport Class and Trigger combination not supported.
0x010106	Connection Manager: Ownership Conflict.
0x010107	Connection Manager: Connection not found at target application.
0x010108	Connection Manager: Invalid connection type (problem with type or priority).
0x010109	Connection Manager: Invalid connection size.
0x010110	Connection Manager: Device not configured.
0x010111	Connection Manager: RPI not supported. Could also be problem with inactivity timeout.

(PLC generated error codes for the Allen-Bradley EtherNet/IP protocol for MicroLogix 1100, 1400, SLC 5/05, or ENI Adapter continued on the next page.)

Allen-Bradley – EtherNet/IP Protocol – PLC Error Code Tables MicroLogix 1100, 1400 & SLC 5/05, both via native Ethernet port; MicroLogix 1000, 1100, 1200, 1400, 1500, SLC 5/03/04/05, all via ENI Adapter

PLC Errors for Allen-Bradley EtherNet/IP Protocol – CIP Errors (Error code 0xaabbbb returned from the PLC.)	
Panel Error Code PLC-497 Hex Value	**Description**
0x010113	Connection Manager: Connection Manager cannot support any more connections.
0x010114	Connection Manager: Either the vendor ID or the Product Code in the key segment did not match the device.
0x010115	Connection Manager: Product Type in the key segment did not match the device.
0x010116	Connection Manager: Major or minor revision information in the key segment did not match the device.
0x010117	Connection Manager: Invalid connection point.
0x010118	Connection Manager: Invalid configuration format.
0x010119	Connection Manager: Connection request fails since there is no controlling connection currently open.
0x01011a	Connection Manager: Target application cannot support any more connections.
0x01011b	Connection Manager: RPI is smaller than the Production Inhibit Time.
0x010203	Connection Manager: Connection cannot be closed since the connection has timed out.
0x010204	Connection Manager: Unconnected Send timed out waiting for a response.
0x010205	Connection Manager: Parameter error in Unconnected send service.
0x010206	Connection Manager: Message too large for Unconnected message service.
0x010207	Connection Manager: Unconnected acknowledge without reply.
0x010301	Connection Manager: No buffer memory available.
0x010302	Connection Manager: Network Bandwidth not available for data.
0x010303	Connection Manager: No Tag filters available.
0x010304	Connection Manager: Not configured to send real-time data.
0x010311	Connection Manager: Port specified in Port segment not available.
0x010312	Connection Manager: Link address specified in port segment not available.
0x010315	Connection Manager: invalid segment type or segment value in path.
0x010316	Connection Manager: Path and Connection not equal in close.
0x010317	Connection Manager: Ether Segment not present or Encoded Value in Network Segment is invalid.
0x010318	Connection Manager: Link address to self invalid.
0x010319	Connection Manager: Resources on Secondary unavailable.
0x01031a	Connection Manager: Connection already established.
0x01031b	Connection Manager: Direct connection already established.
0x01031c	Connection Manager: Miscellaneous.
0x01031d	Connection Manager: Redundant connection mismatch.
0x01031e	Connection Manager: No more consumer resources available in the producing module.
0x01031f	Connection Manager: No connection resources exist for target path.
0x010320 - 0x0107ff	Connection Manager: Vendor specific.

(PLC generated error codes for the Allen-Bradley EtherNet/IP protocol for MicroLogix 1100, 1400, SLC 5/05, or ENI Adapter continued on the next page.)

Allen-Bradley – EtherNet/IP Protocol – PLC Error Code Tables MicroLogix 1100, 1400 & SLC 5/05, both via native Ethernet port; MicroLogix 1000, 1100, 1200, 1400, 1500, SLC 5/03/04/05, all via ENI Adapter

PLC Errors for Allen-Bradley EtherNet/IP Protocol – CIP Errors (Error code 0xaabbbb returned from the PLC.)	
Panel Error Code PLC-497 Hex Value	**Description**
0x020000	Resource unavailable: Connection Manager resources are unavailable to handle service request.
0x030000	Invalid parameter value.
0x040000	Path segment error: The path segment identifier or the segment syntax was not understood by the processing node.
0x050000	Path destination unknown: The path is referencing an object class, instance or structure element that is not known or is not contained in the processing node.
0x060000	Partial transfer: Only part of the expected data was transferred.
0x070000	Connection lost: The messaging connection was lost.
0x080000	Service not supported: The requested service was not implemented or was not defined for this Object Class/Instance.
0x090000	Invalid attribute value: Invalid attribute data detected.
0x0a0000	Attribute list error: An attribute in the Get_Attribute_List or Set_Attribute_List response has a non-zero status.
0x0b0000	Already in requested mode/state: The object is already in the mode/state being requested by the service.
0x0c0000	Object state conflict: The object cannot perform the requested service in its current mode/state.
0x0d0000	Object already exists: The requested instance of object to be created already exists.
0x0e0000	Attribute not settable: A request to modify non-modifiable attribute was received.
0x0f0000	Privilege violation: A permission/privilege check failed.
0x100000	Device state conflict: The device's current mode/state prohibits the execution of the requested service.
0x110000	Reply data too large: The data to be transmitted in the response buffer is larger than the allocated response buffer.
0x120000	Fragmentation of a primitive value: The service specified an operation that is going to fragment a primitive data value. For example, trying to send a 2 byte value to a REAL data type (4 byte).
0x130000	Not enough data: The service did not supply enough data to perform the specified operation.
0x140000	Attribute not supported: The attribute specified in the request is not supported.
0x150000	Too much data: The service supplied more data than was expected.
0x160000	Object does not exist: The object specified does not exist in the device.
0x170000	Service fragmentation sequence not in progress: The fragmentation sequence for this service is not currently active for this data.
0x180000	No stored attribute data: The attribute data of this object was no saved prior to the requested service.
0x190000	Store operation failure: The attribute data of this object was not saved due to a failure during the attempt.
0x1a0000	Routing failure, request packet too large: The service request packet was too large for transmission on a network in the path to the destination.
0x1b0000	Routing failure, response packet too large: The service reponse packet was too large for transmission on a network in the path from the destination.
0x1c0000	Missing attribute list entry data: The service did not supply an attribute in a list of attributes that was needed by the service to perform the requested behavior.

(PLC generated error codes for the Allen-Bradley EtherNet/IP protocol for MicroLogix 1100, 1400, SLC 5/05, or ENI Adapter continued on the next page.)

Allen-Bradley – EtherNet/IP Protocol – PLC Error Code Tables MicroLogix 1100, 1400 & SLC 5/05, both via native Ethernet port; MicroLogix 1000, 1100, 1200, 1400, 1500, SLC 5/03/04/05, all via ENI Adapter

PLC Errors for Allen-Bradley EtherNet/IP Protocol – CIP Errors (Error code 0xaabbbb returned from the PLC.)	
Panel Error Code PLC-497 Hex Value	**Description**
0x1d0000	Invalid attribute value list: The service is returning the list of attributes supplied with status information for those attributes that were invalid.
0x1e0000	Embedded service error: See Service Packet error list (PLC-498 Error codes) below:
0x1f0000	Vendor specific error: A vendor specific error has been encountered. This occurs when none of the specified errors relate to the error in the device.
0x200000	Invalid parameter: A parameter associated with the request was invalid. This code is used when a parameter does meet the requirements defined in an Application Object specification.
0x210000	Write-once value or medium already written: An attempt was made to write to a write-once-medium that has already been written or to modify a value that cannot be change once established.
0x220000	Invalid Reply Received: An invalid reply is received (example: service code sent doesn't match service code received.).
0x230000	Reserved by CIP for future extensions.
0x240000	Reserved by CIP for future extensions.
0x250000	Key failure in path: The key segment was included as the first segment in the path does not match the destination module. The object specific status shall indicate which part of the key check failed.
0x260000	Path Size Invalid: The size of the path which was sent with the Service Request is either not large enough to allow the Request to be routed to an object or too much routing data was included.
0x270000	Unexpected attribute in list: An attempt was made to set an attribute that is not able to be set at this time.
0x280000	Invalid Member ID: The Member ID specified in the request does not exist in the specified Class/Instance/Attribute.
0x290000	Member not settable: A request to modify a non-modifiable member was received.
0x2a0000	Group 2 only server general failure: This error code may only be reported by DeviceNet group 2 only servers with 4K or less code space and only in place of Service not supported, Attribute not supported and Attribute not settable.
0x2b0000 - 0xcf0000	Reserved by CIP for future extensions.
0xd00000 - 0xff0000	Reserved for Object Class and service errors: This range of error codes is to be used to indicate Object Class specific errors. Use of this range should only be used when errors in this table don't accurately reflect the error encountered.

(PLC generated error codes for the Allen-Bradley EtherNet/IP protocol for MicroLogix 1100, SLC 5/05, or ENI Adapter continued on the next page.)

Allen-Bradley – EtherNet/IP Protocol – PLC Error Code Tables MicroLogix 1100, 1400 & SLC 5/05, both via native Ethernet port; MicroLogix 1000, 1100, 1200, 1400, 1500, SLC 5/03/04/05, all via ENI Adapter

PLC Errors for Allen-Bradley EtherNet/IP Protocol – Service Packet Errors (Error code 0xaabbbb returned from the PLC.)	
Panel Error Code PLC-498 Hex Value	**Description**
0x010000	DST Node is out of buffer space.
0x020000	Cannot guarantee delivery; link layer (The remote node specified does not ACK command).
0x030000	Duplicate token holder detected.
0x040000	Local port is disconnected.
0x050000	Application layer timed out waiting for response.
0x060000	Duplicate node detected.
0x070000	Station is offline.
0x080000	Hardware fault.
0x100000	Illegal command or format. Typical error received from PLC when addressed requested to the PLC does not exist. Usually occurs if memory map has not been expanded in PLC to the range requested from panel.
0x200000	Host has a problem and will not communicate.
0x300000	Remote node host is missing, disconnected, or shut down.
0x400000	Host could not complete function due to hardware fault.
0x500000	Addressing problem or memory protected rungs.
0x600000	Function not allowed due to command protection selection.
0x700000	Processor is in Program Mode.
0x800000	Compatibility mode file missing or communication zone problem.
0x900000	Remote node cannot buffer command.
0xA00000	Wait ACK (1775 KA buffer full).
0xB00000	Not used.
0xC00000	Not used.
0xD00000	Error code in the EXT STS byte. See the error code table below.
0xE00000	Fewer levels specified in address than minimum for any address.
0xF00300	More levels specified in address than system supports.
0xF00400	Symbol not found.
0xF00500	Symbol is of improper format.
0xF00600	Address does not point to something usable.
0xF00700	File is wrong size.
0xF00800	Cannot complete request, situation has changed since start of the command.
0xF00900	Data or file size is too large.
0xF00900	Transaction size plus word address is too large.
0xF00B00	Access denied; improper privilege. This will occur if data file is set to constant or protected.
0xF00C00	Condition cannot be generated; resource is not available.
0xF00D00	Condition already exists; resource is readily available.

(PLC generated error codes for the Allen-Bradley EtherNet/IP protocol for MicroLogix 1100, 1400, SLC 5/05, or ENI Adapter continued on the next page.)

Allen-Bradley – EtherNet/IP Protocol – PLC Error Code Tables MicroLogix 1100 , 1400 & SLC 5/05, both via native Ethernet port; MicroLogix 1000, 1100, 1200, 1400, 1500, SLC 5/03/04/05, all via ENI Adapter

PLC Errors for Allen-Bradley EtherNet/IP Protocol – Service Packet Errors (Error code 0xaabbbb returned from the PLC.)	
Panel Error Code PLC-498 Hex Value	**Description**
0xF00E00	Command cannot be executed.
0xF00F00	Histogram overflow.
0xF01000	No access.
0xF01100	Illegal data type.
0xF01200	Invalid parameter or invalid data.
0xF01300	Address reference exists to deleted area.
0xF01400	Command execution failure for unknown reason; possible histogram overflow.
0xF01500	Data conversion error.
0xF01600	Scanner not able to communicate with 1771 rack adapter.
0xF01700	Type mismatch.
0xF01800	1771 module response was not valid.
0xF01900	Duplicated label.
0xF02200	Remote rack fault.
0xF02300	Timeout.
0xF02400	Unknown error.
0xF01A00	File is open; another node owns it.
0xF01B00	Another node is the program owner.
0xF01C00	Reserved.
0xF01D00	Reserved.
0xF01E00	Data table element protection violation.
0xF01F00	Temporary internal problem.

Generic EtherNet IP Protocol – PLC Error Codes

Only errors as listed in the Touch Panel Error Code Table shown on page A-3 can occur when using the Generic Ethernet IP protocol, there are no PLC generated errors.

GE 90-30 – Panel Error Code PLC-499 Explanation

The PLC-499 error code is used to show any errors that are generated by the connected PLC. The PLC-499 error message includes a four digit hexadecimal value embedded in the message. This value can be looked up in the specific PLC's error tables to determine the cause of the error.The possible PLC generated error codes for the GE 90-30 communication protocol are represented by a hexadecimal value as shown in the following message example.

GE 90-30 Error Code PLC-499 Message Example:

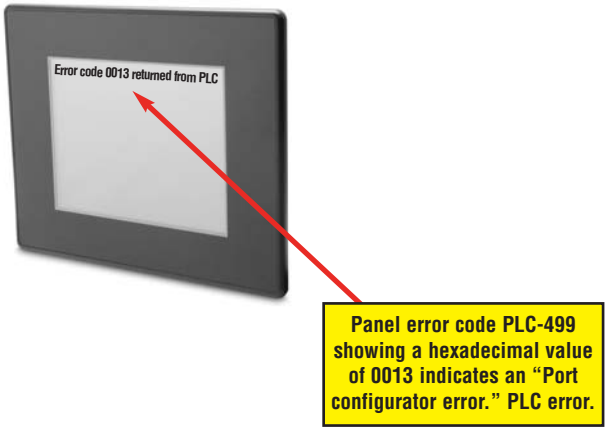

GE 90-30 SNPX Protocol – PLC Error Code Tables

The following table lists the errors that can be generated by the GE 90-30 PLC when using the SNPX protocol.

Note: *The following errors can be generated from the designated PLC, are monitored by the* ***C-more*** *touch panel, and displayed on the touch panel's screen as a hexadecimal value in panel error code PLC-499 message, if active. Please refer to the PLC manufacturer's documentation for additional information.*

PLC Errors for GE 90-30 SNPX Protocol (Major)	
Panel Error Code PLC-499 Hex Value	**Description**
No error	Successful completion. (This is the expected completion value in the COMMREQ Status Word.)
0x0002	Insufficient Privilege. For Series 90-70 PLC, the minor error code contains the privilege level required for the service request.
0x0004	Protocol Sequence Error. The CPU has received a message that is out of order.
0x0005	Service Request Error, the minor error code contains the specific error code.
0x0006	Illegal Mailbox Type. Service request mailbox type is either undefined or unexpected.
0x0007	The PLC CPU's Service Request Queue is full. The master should retry later. It is recommended that the master wait a minimum of 10 msec before sending another service request.
0x000A	SNP DOS Driver Error. The minor error code contains the specific error code.
0x000B	Illegal Service Request. The requested service is either not defined or not supported. (This value is returned in lieu of the actual 01h value passed in the SNP error message, to avoid confusion with the normal successful COMMREQ completion.)
0x000C	Local SNP/SNP-X Error. An error occurred within the SNP task in the CMM module in this PLC. This error may occur in either an SNP master or an SNP slave. The minor error code contains the specific error code.
0x000D	Remote SNP Error. An error occurred within the SNP slave task in the CMM module in the remote PLC. The minor error code contains the specific error code.
0x000E	Autodial Error. An error occurred while attempting to send a command string to an attached external modem. The minor error code contains the specific error code.
0x000F	SNP-X slave error. An error occurred within the SNPX task in the remote slave device. The minor error code contains the specific error code.
0x0013	Port configurator error.
0x0050	Problem with sending mail to the slave Service Request task. (Series 90-70 PLC CPUs only)
0x0051	Problem with getting mail from the slave Service Request task. (Series 90-70 PLC CPUs only)
0x0055	Slave SNP task timed out before receiving an SRP response. (Series 90-70 PLC CPUs only)
0x0056	Slave SNP task could not find the requested datagram connection. (Series 90-70 PLC CPUs only)
0x0057	Slave SNP task encountered an error in trying to write the datagram. (Series 90-70 PLC CPUs only)
0x0058	Slave SNP task encountered an error in trying to update the datagram. (Series 90-70 PLC CPUs only)

(PLC generated error codes for the GE 90-30 SNPX protocol continued on the next page.)

GE 90-30 SNPX Protocol – PLC Error Code Tables (cont'd)

PLC Errors for GE 90-30 SNPX Protocol (Minor-Major) (cont'd)	
Panel Error Code PLC-499 Hex Value	**Description**
PLC Error 0x010C	WAIT-type COMMREQ is not permitted; must use NOW AIT-type.
PLC Error 0x010E	Not used
PLC Error 0x010F	The service request code in an X-Request message is unsupported or invalid at this time. This error may occur if an SNP-X communication session has not been success fully established at the slave device.
PLC Error 0x020C	COMMREQ command is not supported.
PLC Error 0x020E	The modem command string length exceeds 250 characters.
PLC Error 0x020F	Insufficient privilege level in the slave PLC CPU for the requested SNP-X service. Password protection at PLC CPU may be preventing the requested service.
PLC Error 0x0213	Unsupported COMMREQ. These errors are only generated when there is no protocol currently being run on a port, and the port receives a COMMREQ. (The port may be disabled or an error has occurred in processing a new configuration).
PLC Error 0x030C	SNP communication is not active. Must initiate a new SNP communication by sending an Attach or Long Attach COMMREQ.
PLC Error 0x030E	COMMREQ Data Block Length is too small. Output command string data is missing or incomplete.
PLC Error 0x030F	Invalid slave memory type in X-Request message.
PLC Error 0x0313	Invalid COMMREQ length.
PLC Error 0x040C	SNP slave did not respond to Attach message from master.
PLC Error 0x040E	Serial output timeout. The CMM module was unable to transmit the modem autodial output from the serial port. (May be due to missing CTS signal when the CMM is configured to use hardware flow control.)
PLC Error 0x040F	Invalid slave memory address or range in X-Request message.
PLC Error 0x0413	Invalid COMMREQ status word location.
PLC Error 0x050C	Unable to write SNP Status Word to local PLC memory; may be due to invalid Status Word memory type or address.
PLC Error 0x050E	Response was not received from modem. Check modem and cable.
PLC Error 0x050F	Invalid data length in X-Request message. Data length must be non-zero, and may not exceed decimal 1000 bytes.
PLC Error 0x0513	Invalid COMMREQ data.
PLC Error 0x060C	Master device memory type is not valid in this PLC.
PLC Error 0x060E	Modem responded with BUSY. Modem is unable to complete the requested connection. The remote modem is already in use; retry the connection request at a later time.
PLC Error 0x060F	X-Buffer data length does not match the service request in X-Request message. The X-Buffer message length is obtained from the Next Message Length field in the X-Request message; the length of the data within the buffer message is always the message length.
PLC Error 0x070C	Master device memory address or length is zero.
PLC Error 0x070E	Modem responded with NO CARRIER. Modem is unable to complete the requested connection. Check the local and remote modems and the telephone line.
PLC Error 0x070F	Queue Full indication from Service Request Processor in slave PLC CPU. The slave is temporarily unable to complete the service request. The master should try again later. It is recommended that the master wait at least 10 msec before repeating the X-Request.

(PLC generated error codes for the GE 90-30 SNPX protocol continued on the next page.)

GE 90-30 SNPX Protocol – PLC Error Code Tables (cont'd)

PLC Errors for GE 90-30 SNPX Protocol (Minor-Major) (cont'd)	
Panel Error Code PLC-499 Hex Value	**Description**
0x080C	Unable to read or write master device memory locations specified in COMMREQ. Usually caused by invalid memory address for this PLC. SNP message exchange may have taken place.
0x080E	Modem responded with NO DIALTONE. Modem is unable to complete the requested connection. Check the modem connections and the telephone line.
0x080F	Service Request Processor response exceeds 1000 bytes; the SNP-X slave device cannot return the data in an X-Response message. (This error applies to CMM module only.)
0x090C	Master device memory data length exceeds maximum data size of CMM module (2048 bytes). Must use a smaller data length. Use multiple COMMREQs if total data length exceeds this maximum value.
0x090E	Modem responded with ERROR. Modem is unable to complete the requested command. Check the modem command string and modem.
0x0A0C	Slave device memory type is missing or not valid.
0x0A0E	Modem responded with RING, indicating that the modem is being called by another modem. Modem is unable to complete the requested command. Retry the modem command at a later time.
0x0B0C	Slave device memory address is missing or zero.
0x0B0E	An unknown response was received from the modem. Modem is unable to complete the requested command. Check the modem command string and modem. The modem response is expected to be either CONNECT or OK.
0x0C0C	COMMREQ Data Block Length is too small. (When expected COMMREQ length is 6 words or less. An improper length may cause other minor error codes 6-11.)
0x0D0C	Invalid Diagnostic Status Word (DSW) starting word or length.
0x0E0C	Invalid maximum SNP message data size. Must be an even value from 42 to 2048.
0x0F0C	Invalid Privilege Level. Must be 0 through 4 or -1.
0x100C	Invalid Fault Table selector. Must be 1 for I/O Fault Table, or 2 for PLC Fault Table.
0x100F	Unexpected Service Request Processor error. (This error applies to CMM module only; the unexpected SRP error code is saved in the Diagnostic Status Words in the CMM module.)
0x110C	Invalid Fault Table starting index. Must be 1-32 for I/O Fault Table, or 1-16 for PLC.
0x120C	Invalid fault count. Must be 1-32 for I/O Fault Table, or 1-16 for PLC Fault Table.
0x130C	Invalid Set PLC Date/Time mode. Must be 1-4.
0x140C	Invalid Set PLC Date/Time date, time, or day-of-week value.
0x150C	Unable to retrieve master device PLC time/date from PLC CPU.
0x150F	Requested service is not permitted in a Broadcast request. The master must direct the X-Request message to a specific SNP-X slave device.
0x160C	Invalid slave PLC type. Must be 0 for Series 90-70, or 1 for Series 90-30 or Series 90-20.
0x170C	Invalid datagram type. Must be 01h for normal datagram, or 81h (129) for permanent datagram.
0x180C	Missing or too many datagram point formats. Must be 1-32.
0x190C	Invalid datagram point format data.

(PLC generated error codes for the GE 90-30 SNPX protocol continued on the next page.)

GE 90-30 SNPX Protocol – PLC Error Code Tables (cont'd)

PLC Errors for GE 90-30 SNPX Protocol (Minor-Major) (cont'd)	
Panel Error Code PLC-499 Hex Value	**Description**
0x1A0C	Datagram area size is too small to include data for all specified point formats.
0x1B0C	Invalid number of Control Program Names. Must be 1-8.
0x1C0C	SNP-X Request exceeds maximum data size (1000 bytes). Must use a smaller data length. Use multiple COMMREQs if necessary.
0x1D0C	Invalid SNP-X communication session type. Must be 0 for a single slave device, or 1 for multiple slave devices.
0x1E0C	Illegal destination SNP ID specified for SNP-X slave. Must be 0-7 ASCII characters, plus a terminating null character (00h). The Null SNP ID (eight bytes of 00h) may be used to specify any single device. The Broadcast SNP ID (eight bytes of FFh) may be use to specify all slave devices on the serial link.
0x1F0C	Destination SNP ID does not match SNP-X session type. The Broadcast SNP ID is not permitted in a single-slave SNP-X session. The Null SNP ID is not permitted in a multiple-slave SNP-X session.
0x200C	Inactivity timeout (T3'). The SNP slave has not received any new SNP messages within the configured T3' time interval.
0x200F	Invalid Message Type field in a received X-Request message. The message type of an X-Request message must be 58h = 'X'.
0x210C	A Parity error has occurred on an Attach, Attach Response, or Update Real–time Datagram message. Communications have not been established.
0x210F	Invalid Next Message Type or Next Message Length field in a received X Request message. If this request does not use a buffer (0-2 bytes of data), the Next Message Type must be zero. If this request will be followed with a buffer message (more than 2 byte.)), the Next Message Type must be 54h = 'T', and the Next Message Length must specify the length of the X-Buffer message. Valid X-Buffer message lengths are 9-1008 bytes (data length plus 8 bytes).
0x220C	A BCC (Block Check Code) error has occurred on an Attach, Attach Response, or Update Realtime Datagram message. Communications have not been established.
0x220F	Invalid Message Type field in a received X-Buffer message. The message type of an X-Buffer message must be 54h = 'T'.
0x230C	A Framing or Overrun serial error has occurred on an Attach, Attach Response, or Update Realtime Datagram message. Communications have not been established.
0x230F	Invalid Next Message Type field in a received X-Buffer message. Since an X-Buffer message is never followed by another message, the Next Message Type must always be zero.
0x240C	An invalid SNP message type was received when an Attach, Attach Response, or Update Realtime Datagram message was required. Communications have not been established.
0x250C	An invalid next message length value was specified in an Attach, Attach Response, or Update Realtime Datagram message. Communications have not been established.
0x260C	An unexpected SNP message type was received when an Attach, Attach Response, or Update Realtime Datagram was required. Communications have not been established.
0x270C	Another Break was received while SNP slave was waiting for an Attach or Update Realtime Datagram message.
0x280C	An SNP message has been sent and retried the maximum number of times. A maximum of two retries are permitted. A retry is caused by a NAK from from the remote SNP device.
0x290C	A received SNP message has been NAKed the maximum number of two times. The NAKed message may be retransmitted a maximum of two times.

(PLC generated error codes for the GE 90-30 SNPX protocol continued on the next page.)

GE 90-30 SNPX Protocol – PLC Error Code Tables (cont'd)

PLC Errors for GE 90-30 SNPX Protocol (Minor-Major) (cont'd)	
Panel Error Code PLC-499 Hex Value	**Description**
0x2A0C	An unknown message was received when an acknowledge (ACK or NAK) was required.
0x2B0C	Sequence Error. An unexpected SNP message type was received.
0x2C0C	Received SNP message contains bad next message length value.
0x2D0C	Acknowledge timeout. An acknowledge (ACK or NAK) was not received within the configured T2 time interval. A slave device may generate this error if the master device has aborted after maximum response NAKs and does not NAK the next response retry.
0x2E0C	Response timeout. The SNP Master did not receive an SNP Response message within the configured T5' time interval.
0x2F0C	Buffer message timeout. An expected Text Buffer or Connection Data message was not received within the configured T5" time interval.
0x300C	Serial output timeout. The CMM module was unable to transmit a Break, an SNP message, or SNP acknowledge (ACK or NAK) from the serial port. (May be due to missing CTS signal when the CMM module is configured to use hardware flow control.)
0x310C	SNP slave did not receive a response from the Service Request Processor in the PLC CPU.
0x320C	COMMREQ timeout. The COMMREQ did not complete within the configured time interval.
0x330C	An SNP Request or Response was aborted prior to completion due to reception of a Break.
0x340C	PLC backplane communications error
0x350C	Invalid Piggyback Status data memory type or address. Communications have not been established.
0x360C	Invalid SNP Slave SNP ID. Must be a 0-7 ASCII characters, plus a terminating null character (00h). The Null SNP ID (eight bytes of 00h) may be used to specify any single slave device.
0x370C	The SNP master has received a response message containing an unexpected data length. Usually indicates a problem with the remote SNP slave device. May occur when Series 90-70 commands (Task Memory or Program Block Memory Read/Write) are issued to a Series 90-30 slave device.
0x380C	Response code in received SNP-X response message does not match expected value. (Response code must equal the request code +80h.)
0x390C	SNP-X Response message exceeds maximum data size (decimal 1000 bytes). Data in the Response is ignored.
0x400C	A parity error has occurred on an X-Attach Response message when establishing a new SNP-X communication session. Communications have not been established.
0x400D	The requested service is not supported by the SNP slave.
0x400F	Serial output timeout. The slave was unable to transmit an SNP-X message from the serial port. (May be due to missing CTS signal when the CMM module is configured to use hardware flow control.)

(PLC generated error codes for the GE 90-30 SNPX protocol continued on the next page.)

GE 90-30 SNPX Protocol – PLC Error Code Tables (cont'd)

PLC Errors for GE 90-30 SNPX Protocol (Minor-Major) (cont'd)	
Panel Error Code PLC-499 Hex Value	**Description**
0x410C	A framing or overrun error has occurred on an X-Attach Response message when establishing a new SNP-X communication session. Communications have not been established.
0x410D	SNP slave on CMM module requires PLC CPU privilege level 2 to operate. The SNP slave has rejected a request to change to a higher or lower privilege level.
0x410F	An SNP-X request was aborted prior to completion due to reception of a Break.
0x420C	A BCC (Block Check Code) error has occurred on an X-Attach Response message when establishing a new SNP-X communication session. Communications have not been established.
0x420D	SNP Request or Response message exceeds maximum data length of the CMM module. (Total data length for Mailbox and all following Buffer messages is 2048 bytes.) The master must use a smaller data length. Use multiple requests if total data length exceeds the maximum value.
0x420F	An X-Buffer message was received containing greater than 1000 bytes of data. The data is ignored.
0x430C	An invalid message type was received when an X-Attach Response was required when establishing a new SNP-X communication session. Communications have not been established.
0x430D	Improper Write Datagram message format. Series 90-70 slave devices use a different format for this message than Series 90-30 or Series 90-20 slave devices. The master must use the proper message format for this SNP slave device. (The SNP master in the CMMmodule sends this message as part of the Establish Datagram COMMREQ command. The datagram has been partially established, but is not usable; the datagram should be cancelled by using the Datagram ID returned by the COMMREQ.)
0x430F	The SNP-X slave did not receive a response from the Service Request Processor in the PLC CPU.
0x440C	An invalid next message type value was detected in an X-Attach Response message when establishing a new SNP-X communication session. Communications have not been established.
0x440D	A datagram error occurred in a Series 90-70 slave device (dual-port error).
0x440F	PLC backplane communications error.
0x450C	An invalid response code was detected in an X-Attach Response message when establishing a new SNP-X communication session. Communications have not been established.
0x460C	An expected X-Attach Response message was not received within the response timeout interval when establishing a new SNP-X communication session. The master has retried the X-Attach message twice without receiving a response. Communications have not been established.
0x500C	A parity error has occurred on an X-Attach Response message when re-establishing an existing SNP-X communication session. Communications have not been established.
0x500F	A parity error has occurred in a received X-Attach message.
0x510C	A framing or overrun error has occurred on an X-Attach Response message when re-establishing an existing SNP-X communication session. Communications have not been established.
0x510F	A framing or overrun error has occurred in a received X-Attach message.
0x520C	A BCC (Block Check Code) error has occurred on an X-Attach Response message when re-establishing an existing SNP-X communication session. Communications have not been established.
0x520F	A BCC (Block Check Code) error has occurred in a received X-Attach message.

(PLC generated error codes for the GE 90-30 SNPX protocol continued on the next page.)

GE 90-30 SNPX Protocol – PLC Error Code Tables (cont'd)

PLC Errors for GE 90-30 SNPX Protocol (Minor-Major) (cont'd)	
Panel Error Code PLC-499 Hex Value	**Description**
0x530C	An invalid message type was received when an X-Attach Response was required when re-establishing an existing SNP-X communication session. Communications have not been established.
0x530F	An invalid Message Type was received when an X-Attach message was required. (For an X-Attach message, the message type must be 58h = 'T'.)
0x540C	An invalid Next Message Type value was detected in an X-Attach Response message when re-establishing an existing SNP-X communication session. Communications have not been established.
0x540F	An invalid Next Message Type value was detected in a received X-Attach message. (For an X-Attach message, the Next Message Length must be zero.)
0x550C	An invalid response code was detected in an X-Attach Response message when re-establishing an existing SNP-X communication session. Communications have not been established.
0x550F	An invalid request code was detected in a received X-Attach message.
0x560C	An expected X-Attach Response message was not received within the response timeout interval when re-establishing an existing SNP-X communication session. The master has retried the X-Attach message twice without receiving a response. Communications have not been established.
0x600C	A parity error has occurred on an X-Response message.
0x600F	A parity error has occurred in a received X-Request message.
0x610C	A framing or overrun error has occurred on an X-Response message.
0x610F	A framing or overrun error has occurred in a received X-Request message.
0x620C	A BCC (Block Check Code) error has occurred on an X-Response message.
0x620F	A BCC (Block Check Code) error has occurred in a received X-Request message.
0x630C	An invalid message type was received when an X-Response message was required.
0x640C	An invalid next message type value was detected in an X-Response message.
0x650C	An invalid response code was detected in an X-Response message.
0x660C	An expected X-Response message was not received within the response time.
0x700C	A parity error has occurred on an Intermediate Response message.
0x700F	A parity error has occurred in a received X-Buffer message.
0x710C	A framing or overrun error has occurred on an Intermediate Response message.
0x710F	A framing or overrun error has occurred in a received X-Buffer message.
0x720C	A BCC (Block Check Code) error has occurred on an Intermediate Response message.
0x720F	A BCC(Block Check Code) error has occurred in a received X-Buffer message.
0x730C	An invalid message type was received when an Intermediate Response message was required.
0x730F	An expected X-Buffer message was not received.
0x740C	An invalid next message type value was detected in an Intermediate Response message.
0x750C	An invalid response code was detected in an Intermediate Response message.
0x760C	An expected Intermediate Response message was not received within the response timeout interval.

(PLC generated error codes for the GE 90-30 SNPX protocol continued on the next page.)

GE 90-30 SNPX Protocol – PLC Error Code Tables (cont'd)

PLC Errors for GE 90-30 SNPX Protocol (Minor-Major) (cont'd)	
Panel Error Code PLC-499 Hex Value	**Description**
0x8D0A	Bad DOS Version. Must have DOS 2.0, or later, to support the SNP DOS Driver.
0x8E0A	PC Serial port configured for SNP Master driver is not open; no communication can take place.
0x8F0A	Out–of–Sequence SNP message. SNP message type received was not the type expected.
0x900A	Bad SNP BCC encountered. Transmission was aborted after maximum retries due to a bad Block Check Code.
0x910A	Bad SNP communication. Transmission was aborted after maximum retries due to serial errors (that is, parity, overrun, or framing errors).
0x920A	No SNP communication. Either communication has been lost or a communication session has not been established.
0xC105	Invalid block state transition.
0xC205	The OEM key is NULL (inactive).
0xC305	Text length does not match traffic type.
0xC405	Verify with FA Card or EEPROM failed.
0xC505	No task–level Rack/Slot configuration to read or delete.
0xC605	Control Program (CP) tasks exist but requestor not logged into main CP.
0xC705	Passwords are set to inactive and cannot be enabled or disabled.
0xC805	Password(s) already enabled and can not be forced inactive.
0xC905	Login using non–zero buffer size required for block commands.
0xCA05	Device is write–protected.
0xCB05	A comm or write verify error occurred during save or restore.
0xCC05	Data stored on device has been corrupted and is no longer reliable.
0xCD05	Attempt was made to read a device but no data has been stored on it.
0xCE05	Specified device has insufficient memory to handle request.
0xCF05	Specified device is not available in the system (not present).
0xD005	One or more PLC modules configured have unsupported revision.
0xD105	Packet size or total program size does not match input.
0xD205	Invalid write mode parameter.
0xD305	User Program Module (UPM) read or write exceeded block end.
0xD405	Mismatch of configuration checksum.
0xD505	Invalid block name specified in datagram.
0xD605	Total datagram connection memory exceeded.
0xD705	Invalid datagram type specified.
0xD805	Point length not allowed.
0xD905	Transfer type invalid for this Memory Type selector.
0xDA05	Null pointer to data in Memory Type selector.
0xDB05	Invalid Memory Type selector in datagram.
0xDC05	Unable to find connection address.
0xDD05	Unable to locate given datagram connection ID.
0xDE05	Size of datagram connection invalid.
0xDF05	Invalid datagram connection address.

(PLC generated error codes for the GE 90-30 SNPX protocol continued on the next page.)

GE 90-30 SNPX Protocol – PLC Error Code Tables (cont'd)

PLC Errors for GE 90-30 SNPX Protocol (Minor-Major) (cont'd)	
Panel Error Code PLC-499 Hex Value	**Description**
0xE005	Service in process cannot login.
0xE105	No I/O configuration to read or delete.
0xE205	IOS could not delete configuration, or bad type.
0xE305	CPU revision number does not match.
0xE405	Memory Type for this selector does not exist.
0xE505	DOS file area not formatted.
0xE605	CPU model number does not match.
0xE705	Configuration is not valid.
0xE805	No user memory is available to allocate.
0xE905	Memory Type selector not valid in context.
0xEA05	Not logged in to process service request.
0xEB05	Task unable to be deleted.
0xEC05	Task unable to be created.
0xED05	VME bus error encountered.
0xEE05	Could not return block sizes.
0xEF05	Programmer is already attached.
0xF005	Request only valid in stop mode.
0xF105	Request only valid from programmer.
0xF205	Invalid program cannot log in.
0xF305	I/O configuration mismatch.
0xF405	Invalid input parameter in request.
0xF505	Invalid password.
0xF605	Invalid sweep state to set.
0xF705	Required to log in to a task for service.
0xF805	Invalid Task Name referenced.
0xF905	Task address out of range.
0xFA05	Cannot replace I/O module.
0xFB05	Cannot clear I/O configuration.
0xFC05	I/O configuration is invalid.
0xFD05	Unable to perform auto configuration.
0xFE05	No privilege for attempted operation.
0xFF05	Service Request Error has been aborted.

Mitsubishi FX Protocol – PLC Error Codes

Only errors as listed in the Touch Panel Error Code Table shown on page A-3 can occur when using the Mitsubishi FX protocol, there are no PLC generated errors.

Omron – Panel Error Code PLC-499 Explanation

The PLC-499 error code is used to show any errors that are generated by the connected PLC. The PLC-499 error message includes a four digit hexadecimal value embedded in the message. This value can be looked up in the specific PLC's error tables to determine the cause of the error. The possible PLC generated error codes for the Omron Host Link and FINS communication protocol are represented by a hexadecimal value as shown in the following message example.

Omron Error Code PLC-499 Message Example:

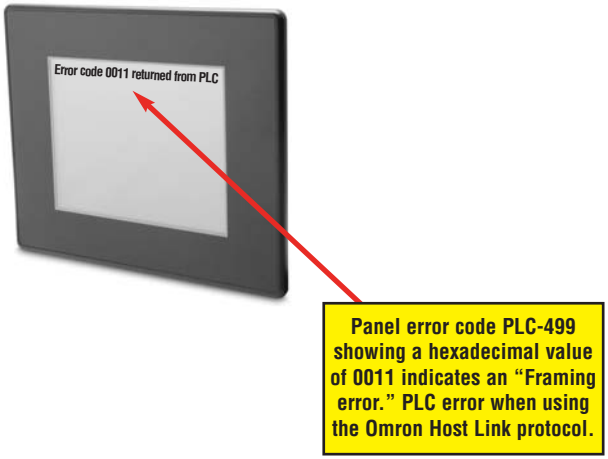

Omron Host Link Protocol – PLC Error Code Table

The following table lists the errors that can be generated by the Omron PLC when using the Host Link protocol.

Note: *The following errors can be generated from the designated PLC, are monitored by the* ***C-more*** *touch panel, and displayed on the touch panel's screen as a hexadecimal value in panel error code PLC-499 message, if active. Please refer to the PLC manufacturer's documentation for additional information.*

PLC Error Codes for Omron Host Link	
Panel Error Code PLC-499 Hex Value	**Description**
0x0000	Normal Completion.
0x0001	Not executable in RUN mode.
0x0002	Not executable in MONITOR mode.
0x0003	Not executable with PROM mounted.
0x0004	Address over (data overflow).
0x000B	Not executable in PROGRAM mode.
0x000C	Not executable in DEBUG mode.
0x000D	Not executable in LOCAL mode.
0x0010	Parity error.
0x0011	Framing error.
0x0012	Overrun.
0x0013	FCS error.
0x0014	Format error (parameter length error).
0x0015	Entry number data error (parameter error, data code error, data length error).
0x0016	Instruction not found.
0x0018	Frame length error.
0x0019	Not executable (due to Un-executable error clear, non-registration of I/O table, etc.).
0x0020	I/O table generation impossible (unrecognized remote I/O unit, channel over, duplication of optical transmitting I/O unit).
0x00A0	Abort due to parity error in transmit data under process.
0x00A1	Abort due to framing error in transmit data under process.
0x00A2	Abort due to overrun in transmit data under process.
0x00A3	Abort due to FCS error in transmit data under process.
0x00A4	Abort due to format error in transmit data under process.
0x00A5	Abort due to frame length error in transmit data under process.
0x00A8	Abort due to entry number data error in transmit data under process.
0x00B0	Un-executable due to program area capacity other than 16k bytes.

Omron FINS Protocol – PLC Error Code Table

The following table lists the errors that can be generated by the Omron PLC when using the FINS protocol.

Note: *The following errors can be generated from the designated PLC, are monitored by the* ***C-more*** *touch panel, and displayed on the touch panel's screen as a hexadecimal value in panel error code PLC-499 message, if active. Please refer to the PLC manufacturer's documentation for additional information.*

PLC Error Codes for Omron FINS	
Panel Error Code PLC-499 Hex Value	**Description**
0x0000	Normal Completion.
0x0001	Service Canceled.
0x0101	Local Error: Local node not in network.
0x0102	Local Error: Token Timeout.
0x0103	Local Error: Retries Failed.
0x0104	Local Error: Too many send frames.
0x0105	Local Error: Node address range error.
0x0106	Local Error: Node Address Duplication.
0x0201	Destination Node Error: Destination Node not in network.
0x0202	Destination Node Error: Unit Missing.
0x0203	Destination Node Error: Third Node missing.
0x0204	Destination Node Error: Destination Node busy.
0x0205	Destination Node Error: Response Timeout.
0x0301	Controller Error: Communications Controller Error.
0x0302	Controller Error: CPU Unit Error.
0x0303	Controller Error: Controller Error.
0x0304	Controller Error: Unit number Error.
0x0401	Service Unsupported: Undefined Command.
0x0402	Service Unsupported: Not supported by Model/Version.
0x0501	Routing Table Error: Destination address setting error.
0x0502	Routing Table Error: No routing tables.
0x0503	Routing Table Error: Routing table error.
0x0504	Routing Table Error: Too many delays.
0x1001	Command Format Error: Command too long.
0x1002	Command Format Error: Command too short.
0x1003	Command Format Error: Elements/Data don't match.
0x1004	Command Format Error: Command format error.
0x1005	Command Format Error: Header Error.
0x1101	Parameter Error: Area classification missing.
0x1102	Parameter Error: Access Size Error.
0x1103	Parameter Error: Address range error.

(PLC generated error codes for the Omron FINS protocol continued on the next page.)

Omron FINS Protocol – PLC Error Code Table (cont'd)

PLC Error Codes for Omron FINS	
Panel Error Code PLC-499 Hex Value	**Description**
0x1104	Parameter Error: Address range exceeded.
0x1106	Parameter Error: Program Missing.
0x1109	Parameter Error: Relational Error.
0x110A	Parameter Error: Duplicate Data Access.
0x110B	Parameter Error: Response too long.
0x110C	Parameter Error: Parameter Error.
0x2002	Read Not Possible: Protected.
0x2003	Read Not Possible: Table missing.
0x2004	Read Not Possible: Data missing.
0x2005	Read Not Possible: Program missing.
0x2006	Read Not Possible: File missing.
0x2007	Read Not Possible: Data mismatch.
0x2101	Write Not Possible: Read Only.
0x2102	Write Not Possible: Protected - cannot write data link table.
0x2103	Write Not Possible: Cannot register.
0x2105	Write Not Possible: Program missing.
0x2106	Write Not Possible: File missing.
0x2107	Write Not Possible: File name already exists.
0x2108	Write Not Possible: Cannot change.
0x2201	Not executable in current mode: Not possible during execution.
0x2202	Not executable in current mode: Not possible while running.
0x2203	Not executable in current mode: Wrong PLC mode (Program).
0x2204	Not executable in current mode: Wrong PLC mode (Debug).
0x2205	Not executable in current mode: Wrong PLC mode (Monitor).
0x2206	Not executable in current mode: Wrong PLC mode (Run).
0x2207	Not executable in current mode: Specified node not polling node.
0x2208	Not executable in current mode: Step cannot be executed.
0x2301	No such device: File device missing.
0x2302	No such device: Missing memory.
0x2303	No such device: Clock missing.
0x2401	Cannot Start/Stop: Table missing.
0x2502	Unit Error: Memory Error.
0x2503	Unit Error: I/O setting Error.
0x2504	Unit Error: Too many I/O points.
0x2505	Unit Error: CPU bus error.
0x2506	Unit Error: I/O Duplication.

(PLC generated error codes for the Omron FINS protocol continued on the next page.)

Omron FINS Protocol – PLC Error Code Table (cont'd)

PLC Error Codes for Omron FINS	
Panel Error Code PLC-499 Hex Value	**Description**
0x2507	Unit Error: I/O bus error.
0x2509	Unit Error: SYSMAC BUS/2 error.
0x250A	Unit Error: CPU Bus Unit Error.
0x250D	Unit Error: SYSMAC BUS No. duplication.
0x250F	Unit Error: Memory Error.
0x2510	Unit Error: SYSMAC BUS terminator missing.
0x2601	Command Error: No protection.
0x2602	Command Error: Incorrect password.
0x2604	Command Error: Protected.
0x2605	Command Error: Service already executing.
0x2606	Command Error: Service stopped.
0x2607	Command Error: No execution right.
0x2608	Command Error: Settings not complete.
0x2609	Command Error: Necessary items not set.
0x260A	Command Error: Number already defined.
0x260B	Command Error: Error will not clear.
0x3001	Access Right Error: No access right.
0x4001	Abort: Service aborted.

Omron – Panel Error Code P495 Explanation

The PLC-495 error code is used to show any errors that are generated by the connected PLC. The PLC-495 error message includes a four digit hexadecimal value embedded in the message. This value can be looked up in the specific PLC's error tables to determine the cause of the error. The possible PLC generated error codes for the Omron CS/CJ FINS ethernet communication protocol are represented by a hexadecimal value as shown in the following message example.

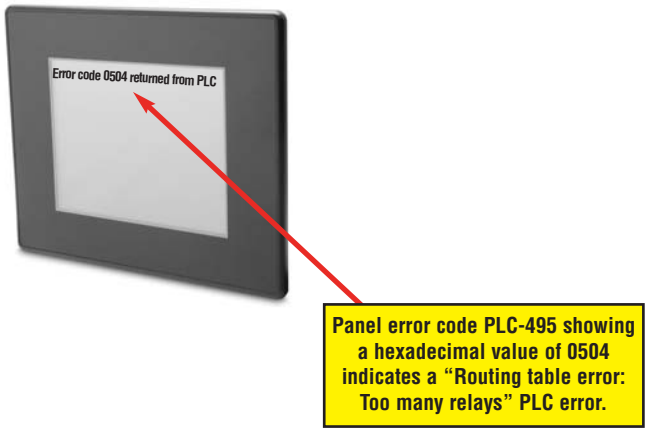

Omron CS/CJ FINS Ethernet Protocol – PLC Error Code Table

The following table lists the errors that can be generated by the Omron PLC when using the CS/CJ FINS Ethernet protocol.

Note: *The following errors can be generated from the designated PLC, are monitored by the* ***C-more*** *touch panel, and displayed on the touch panel's screen as a hexadecimal value in panel error code PLC-495 message, if active. Please refer to the PLC manufacturer's documentation for additional information.*

PLC Error Codes for Omron CS/CJ FINS Ethernet	
Panel Error Code PLC-495 Hex Value	**Description**
0103	Local Error: Send Error from lack of buffer space. Try reducing Ethernet load to the module.
0201	Destination Node Error: IP address of remote node not set correctly.
0202	Destination Node Error: No node with the specified unit address found.
0205	Destination Node Error: Packet corrupted or Response timeout. Try increasing timeout.
0301	Controller Error: Communications controller error.
0302	Controller Error: CPU Unit error. Check error LEDs on PLC. Refer to documentation for that CPU.
0304	Controller Error: Unit number error. Make sure Unit number is not used twice.
0401	Service unsupported: Undefined command.
0501	Routing table error: Destination address setting error. Routing table incorrect.
0502	Routing table error: No routing tables.
0503	Routing table error: Routing table error.
0504	Routing table error: Too many relays.
1001	Command format error: Command too long. Bad packet: check for electrical noise and grounding.
1002	Command format error: Command too short. Bad packet: check for electrical noise and grounding.
1003	Command format error: Elements/data don't match. Bad packet: check for electrical noise and grounding.
1005	Command format error: Header error. This is the error received when station # set in the command does not match the station # of the Ethernet module.
1100	Parameter error: UDP socket number bad.
1101	Parameter error: Address requested does not exist in PLC.
1103	Parameter error: Address area requested in not accessible.
220F	Status error: Duplicate Socket error.
2210	Status error: Specified socket not open.
2305	Environment Error: IP address conversion failed. Only encountered when using routing tables.
2307	Environment Error: IP address conversion set for automatic.
2503	Unit error: I/O setting error.
2505	Unit error: CPU bus error.
250A	Unit error: CPU Bus Unit error.

Siemens – Panel Error Code P499 Explanation

The PLC-499 error code is used to show any errors that are generated by the connected PLC. The PLC-499 error message includes a four digit hexadecimal value displayed at the end of the message. This value can be looked up in the specific PLC's error tables to determine the cause of the error. The possible PLC generated error codes for the Siemens PPI communication protocols breakdown into a four digit hexadecimal value as shown in the following message example.

Siemens Error Code PLC-499 Message Example:

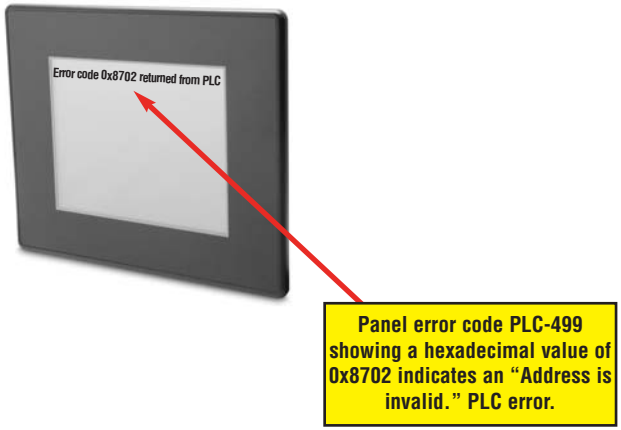

Siemens PPI Protocol – PLC Error Code Table

PLC PDU Header Errors for S7-200 PPI	
Panel Error Code PLC-499 Hex Value	**Description**
0x0001	Hardware Fault.
0x0003	Object access not allowed: Occurs when access to Timer and Counter data type is set to Signed Integer and not BCD.
0x0004	Context not supported.
0x0005	Address out of range: Occurs when requesting an address within a Data Block that does not exist or is out of range.
0x0006	Address out of range.
0x0007	Write Data size mismatch.
0x000A	Object does not exist: Occurs when trying to request a Data Block that does not exist.
0x8000	Function being used.
0x8001	Action is not allowed in current mode.
0x8101	Hardware fault.
0x8103	Access not allowed.
0x8104	Function not supported.
0x8105	Address invalid.
0x8106	Data Type not supported.
0x8107	Data Type is not consistent with size.
0x810A	Object does not exist.
0x8500	PDU Size is incorrect.
0x8702	Address is invalid.
0xD201	Block name syntax error.
0xD202	Error with function parameter.
0xD203	Error with block type.
0xD204	No linked block.
0xD205	Object already exists.
0xD206	Object already exists.
0xD207	Block already used in EPROM.
0xD209	Block does not exist.
0xD20E	No Block does not exist.
0xD210	Block number incorrect.

Siemens ISO over TCP Protocol – PLC Error Code Table

PLC PDU Header Errors for S7-300 CPU, S7-200 Ethernet	
Panel Error Code PLC-499 Hex Value	**Description**
0x0001	Hardware Fault.
0x0003	Object access not allowed: Occurs when access to Timer and Counter data type is set to Signed Integer and not BCD.
0x0004	Context not supported.
0x0005	Address out of range: Occurs when requesting an address within a Data Block that does not exist or is out of range.
0x0006	Address out of range.
0x0007	Write Data size mismatch.
0x000A	Object does not exist: Occurs when trying to request a Data Block that does not exist.
0x8000	Function being used.
0x8001	Action is not allowed in current mode.
0x8101	Hardware fault.
0x8103	Access not allowed.
0x8104	Function not supported.
0x8105	Address invalid.
0x8106	Data Type not supported.
0x8107	Data Type is not consistent with size.
0x810A	Object does not exist.
0x8500	PDU Size is incorrect.
0x8702	Address is invalid.
0xD201	Block name syntax error.
0xD202	Error with function parameter.
0xD203	Error with block type.
0xD204	No linked block.
0xD205	Object already exists.
0xD206	Object already exists.
0xD207	Block already used in EPROM.
0xD209	Block does not exist.
0xD20E	No Block does not exist.
0xD210	Block number incorrect.

Touch Panel Runtime Errors

Appendix B

In This Appendix...

Introduction B–2

Runtime Errors B–3

B

Introduction

The *C-more* touch panels have diagnostics built-in to the operating system that monitor various runtime functions that will display an error message on the panel's display indicating that a particular error has occurred and what the error represents. The **Error Message(s)** is displayed in the upper left area of the display screen. The **Runtime Errors** are also logged into the panel's **Error** log under the **Information** tab in the panel's **System Setup Screens**. The **Error Log Code**, such as **RTE-031**, is how the error is identified in the error log. See **Chapter 5: System Setup Screens** for additional details. The tables that follow show the possible **Runtime Errors** and include the error message, log error code, tag error code value, cause, etc.

The user can include in their touch panel project the use of this diagnostic information by using the system tag name **SYS ERR ERRORCODE** to control displayed screens, operator messages, etc., and also communicate error information to the PLC or controlling device. If a runtime error occurs, the **SYS ERR ERRORCODE** system tag will contain the numeric value shown under the **Tag Code Error Value**. For example, if a **Low Battery** runtime error is indicated, then the screen display will show **Low Battery** and the **SYS ERR ERRORCODE** system tag will contain the value **2031**. The value of the last runtime error detected will remain in the **SYS ERR ERRORCODE**.

If you have difficulty determining the cause of the error, refer to **Chapter 8: Troubleshooting** for additional help or contact our technical support group at 770-844-4200

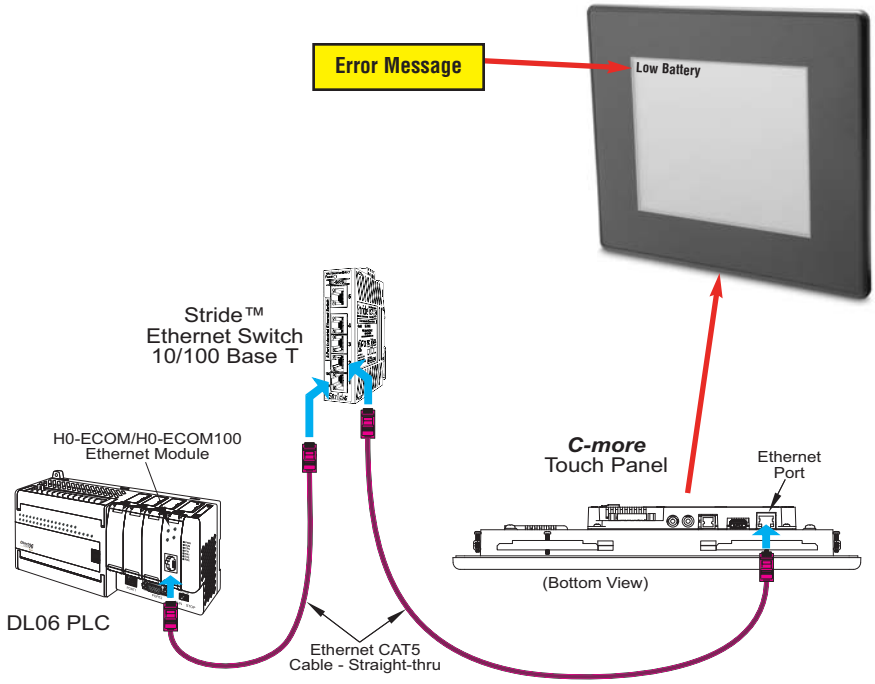

Runtime Errors

If there is more than one **Runtime Error**, then the **Error Message** displayed at the top of the panel's screen will display for 3 seconds, then be off for 2 seconds. The next **Error Message** will display for the same time increments, continue through any other active runtime error messages, and then start over. When only one **Runtime Error** is active, then that message will continuously be displayed until it is no longer active.

No.	Error Log Code	Error Message Located at upper left of screen	Error Message Tag	Tag Error Code Value	System Screen Info > Error	Cause
Log Error						
1	RTE-001	Log Failed. Not enough Memory Space in %Device%	SYS ERR ERRORCODE	2001	MM/DD/YY HH/MM/SS Error Code RTE-001	The size of the destination memory is not large enough to store the data.
2	RTE-002	Log Failed. %Device% cannot be found	SYS ERR ERRORCODE	2002	MM/DD/YY HH/MM/SS Error Code RTE-002	No device available or the device is defective.
3	RTE-003	Log Failed. Can not write file - %file%	SYS ERR ERRORCODE	2003	MM/DD/YY HH/MM/SS Error Code RTE-003	Logging the data has failed due to a problem such as the memory write protect is enabled.
4	RTE-004	Log cache memory is full	SYS ERR ERRORCODE	2004	MM/DD/YY HH/MM/SS Error Code RTE-004	The data log buffer in the SRAM memory is full.
Screen Capture						
1	RTE-011	Capture Failed. Not enough Memory Space in %Device%	SYS ERR ERRORCODE	2011	MM/DD/YY HH/MM/SS Error Code RTE-011	The size of the destination memory is not large enough to store the data.
2	RTE-012	Capture Failed. %Device% cannot be found	SYS ERR ERRORCODE	2012	MM/DD/YY HH/MM/SS Error Code RTE-012	No device available or the device is defective.
3	RTE-013	Capture Failed. Can not write file - %file%	SYS ERR ERRORCODE	2013	MM/DD/YY HH/MM/SS Error Code RTE-013	Logging the data has failed due to a problem such as the memory write protect is enabled.

Table continued on next page.

B

Runtime Errors (cont'd)

No.	Error Log Code	Error Message Located at upper left of screen	Error Message Tag	Tag Error Code Value	System Screen Info > Error	Cause
Handshake						
1	RTE-021	Handshake Timeout Error	SYS ERR ERRORCODE	2021	MM/DD/YY HH/MM/SS Error Code RTE-021	A communications timeout occurred when either a Recipe or Numeric Entry Object, in which Notification and Handshake signals are used, failed to complete the responses.
Battery						
1	RTE-031	Low Battery	SYS ERR ERRORCODE	2031	MM/DD/YY HH/MM/SS Error Code RTE-031	The panel's backup battery voltage level has fallen below 1.8 VDC and should be replaced.
e-mail						
1	RTE-041	E-mail Connection Error %Address%	SYS ERR ERRORCODE	2041	MM/DD/YY HH/MM/SS Error Code RTE-041	An incorrect SMTP address has been entered into the Touch Panel Network dialog screen.
2	RTE-042	Send E-mail Error %Address%	SYS ERR ERRORCODE	2042	MM/DD/YY HH/MM/SS Error Code RTE-042	An incorrect email address has been entered into the Address Book.
Send FTP						
1	RTE-051	FTP Connection Error %Address%&%ID%	SYS ERR ERRORCODE	2051	MM/DD/YY HH/MM/SS Error Code RTE-051	An incorrect FTP Service has been assigned into the Touch Panel Network dialog screen.
2	RTE-052	Send FTP Error %Address%&%ID%	SYS ERR ERRORCODE	2052	MM/DD/YY HH/MM/SS Error Code RTE-052	Permission to write to the FTP folder has not been authorized. The FTP site may require a user ID and password.
Sound						
1	RTE-081	Sound Failed. Not enough Memory	SYS ERR ERRORCODE	2081	MM/DD/YY HH/MM/SS Error Code RTE-081	The sound file failed to play due to insufficient memory.
Confiict						
1	RTE-091	IP Address Conflict - Corrct IP Address and Power Cycle	SYS ERR ERRORCODE	2091	MM/DD/YY HH/MM/SS Error Code RTE-091	Conflict of IP Address

Runtime Errors (cont'd)

No.	Error Log Code	Error Message Located at upper left of screen	Error Message Tag	Tag Error Code Value	System Screen Info > Error	Cause
Multiple Recipe						
1	RTE-101	Record doesn't exist	SYS ERR ERRORCODE	2101	MM/DD/YY HH/MM/SS Error Code RTE-101	The recipe file or data doesn't exist.
2	RTE-102	File cannot open	SYS ERR ERRORCODE	2102	MM/DD/YY HH/MM/SS Error Code RTE-102	The recipe file cannot be opened.
3	RTE-103	E-mail Connection Error %Address%	SYS ERR ERRORCODE	2103	MM/DD/YY HH/MM/SS Error Code RTE-103	Abnormality is found in the numberic character data of the recipe file.
4	RTE-104	Send E-mail Error %Address%	SYS ERR ERRORCODE	2104	MM/DD/YY HH/MM/SS Error Code RTE-104	Abnormality is found in the Tag data of the recipe file.
5	RTE-105	Recipe - Index (%Row%) error	SYS ERR ERRORCODE	2105	MM/DD/YY HH/MM/SS Error Code RTE-105	Recipe was operated by the record number outside the range.
6	RTE-106	Not enough buffer memory	SYS ERR ERRORCODE	2106	MM/DD/YY HH/MM/SS Error Code RTE-106	Memory allocation error
7	RTE-107	File cannot write	SYS ERR ERRORCODE	2107	MM/DD/YY HH/MM/SS Error Code RTE-107	There was an error trying to write the recipe file.
8	RTE-108	Wrong file format	SYS ERR ERRORCODE	2108	MM/DD/YY HH/MM/SS Error Code RTE-108	The recipe file format is incorrect.
9	RTE-109	Not enough Memory Space in %Device%	SYS ERR ERRORCODE	2109	MM/DD/YY HH/MM/SS Error Code RTE-109	Insufficient storage space on media.
Action						
1	RTE-121	Action Overflows	SYS ERR ERRORCODE	2121	MM/DD/YY HH/MM/SS Error Code RTE-121	The number of actions executed in the event exceeded the maximum number.
SRAM Error						
1	RTE-500	SRAM Check Sum Error	SYS ERR ERRORCODE	2500	MM/DD/YY HH/MM/SS Error Code RTE-500	Memory in Panel has been Corrupted by Power Loss, etc.

Mounting Clips Prior April 2006

Appendix C

In This Appendix...

Introduction C–2
EA7-S6M-R, S6C-R, S6M, S6C & T6C C–3
EA7-T8C C–5
EA7-T10C C–7
EA7-T12C C–9
EA7-T15C C–11

C

Introduction

The mounting clips supplied with *C-more* touch panels after April 2006 are slightly different than the original clips. **Appendix C: Mounting Clips Prior April 2006** has been included in the Hardware User Manual for the end user to have a reference to the drawings and information pertaining to the original mounting clips. The enclosure mounting thickness range and screw torque range has remained the same for each type of touch panel. The basic physical construction and use of the mounting clips remains the same, as does the various touch panel cutout dimensions.

The 6" touch panels use two long style mounting clips. The new 6" mounting clips have been redesigned to increase rigidity and also the screw position height has been increased to allow easier placement in the touch panel slots on thicker enclosures.

The 8"-15" touch panels, depending on the panel's size, use either 6 or 8 smaller style mounting clips. The new 8"-15" mounting clips have been made shorter in height to allow easier installation. Their rigidity remains the same.

Original
6" Mounting Clips

Original
8-15" Mounting Clip

Newer
6" Mounting Clips

Newer
8-15" Mounting Clip

C

EA7-S6M-R, S6C-R, S6M, S6C and T6C Original Mounting Clips

Dimensions:

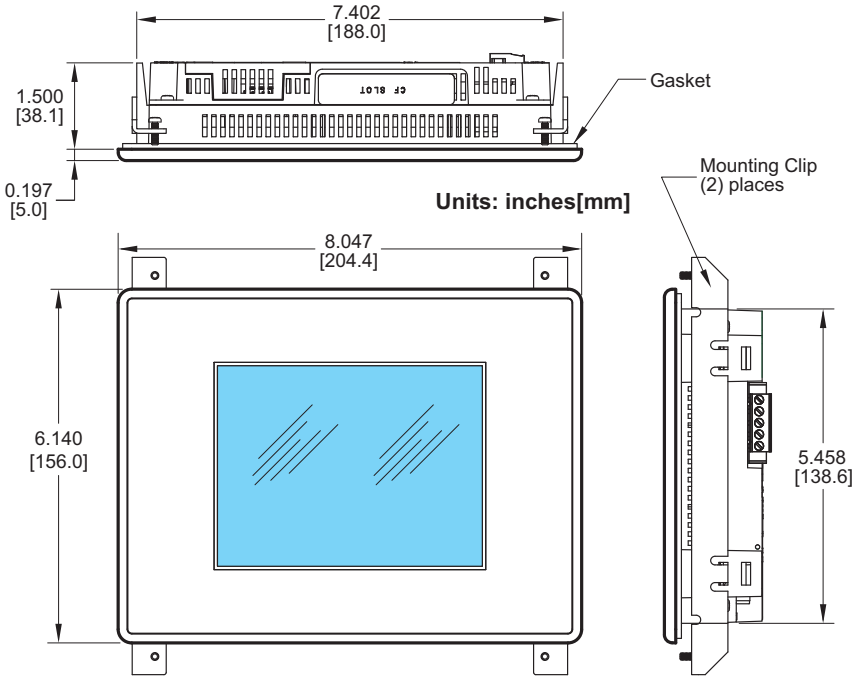

Enclosure Mounting Thickness Ranges and Mounting Clip Screw Torque

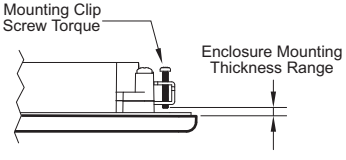

Touch Panel Size	Enclosure Thickness Range	Mounting Clip Screw Torque
6" – lower mounting clip position	0.039 - 0.24 inch [1 – 6 mm]	35 ~ 50 oz-in [0.25 ~ 0.35 Nm]
6" – upper mounting clip position	0.20 - 0.63 inch [5 – 16 mm]	35 ~ 50 oz-in [0.25 ~ 0.35 Nm]

EA7-S6M-R, S6C-R, S6M, S6C and T6C Original Mounting Clips

Cutout Dimensions:

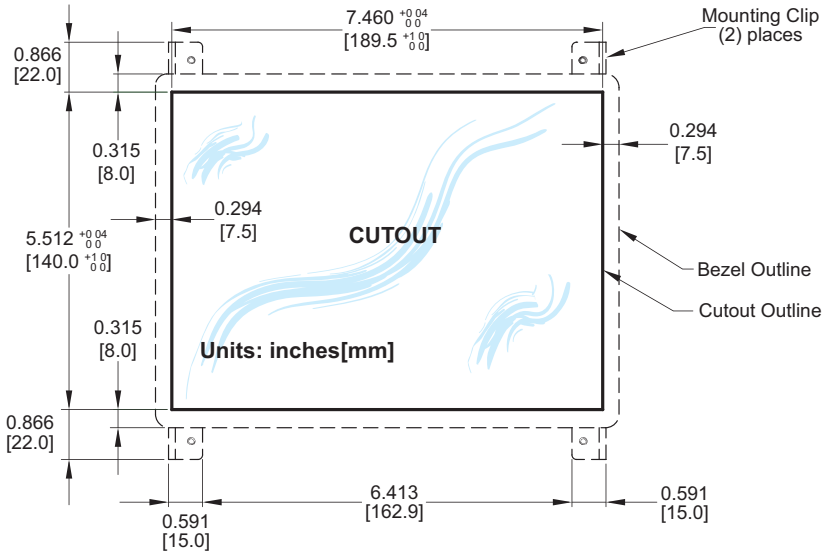

C

EA7-T8C
Original Mounting Clips

Dimensions:

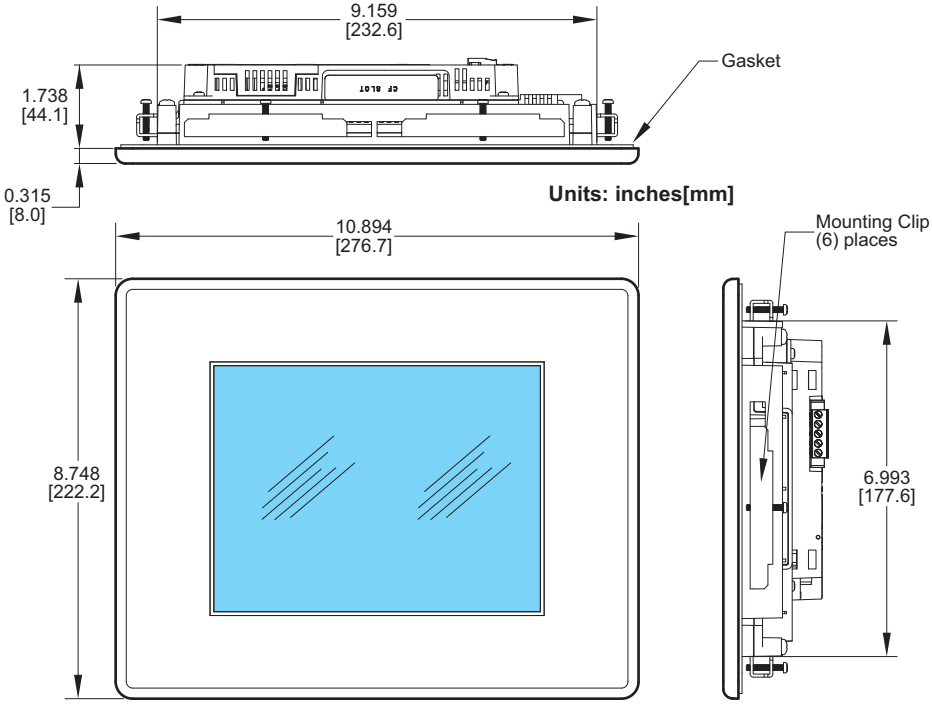

Enclosure Mounting Thickness Ranges and Mounting Clip Screw Torque

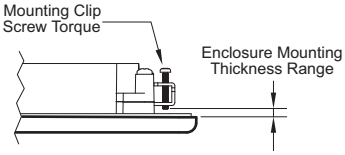

Touch Panel Size	Enclosure Thickness Range	Mounting Clip Screw Torque
8”, 10”, 12” & 15”	0.039 - 0.20 inch [1 – 5 mm]	42 ~ 57 oz-in [0.3 ~ 0.4 Nm]

EA7-T8C
Original Mounting Clips

C

Cutout Dimensions:

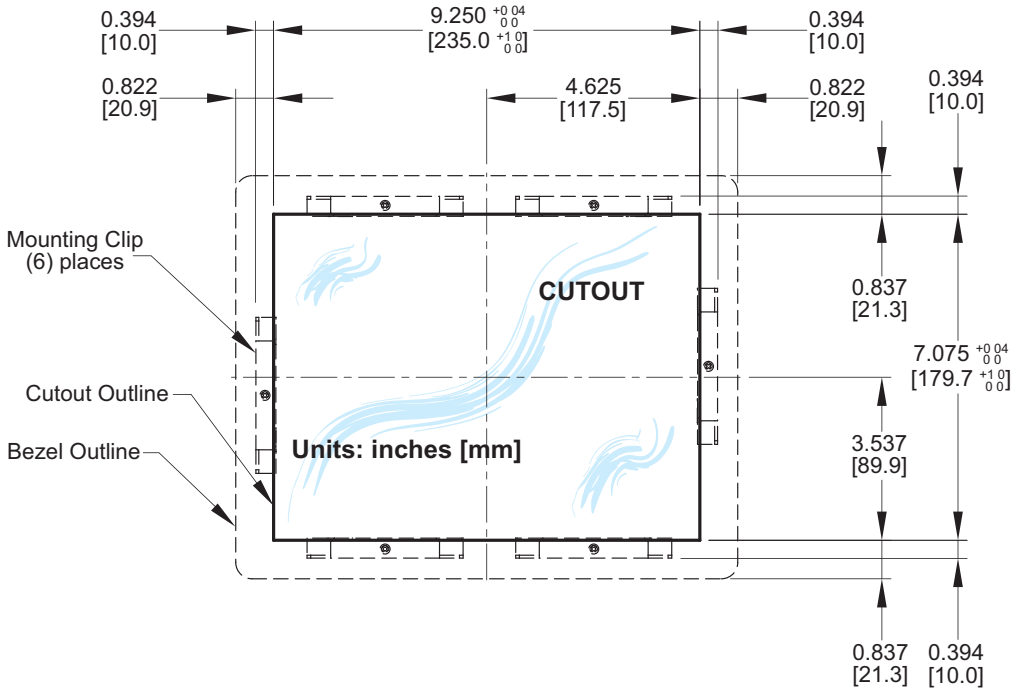

C

EA7-T10C
Original Mounting Clips

Dimensions:

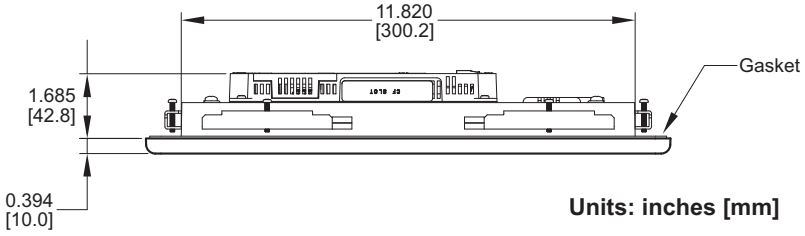

Units: inches [mm]

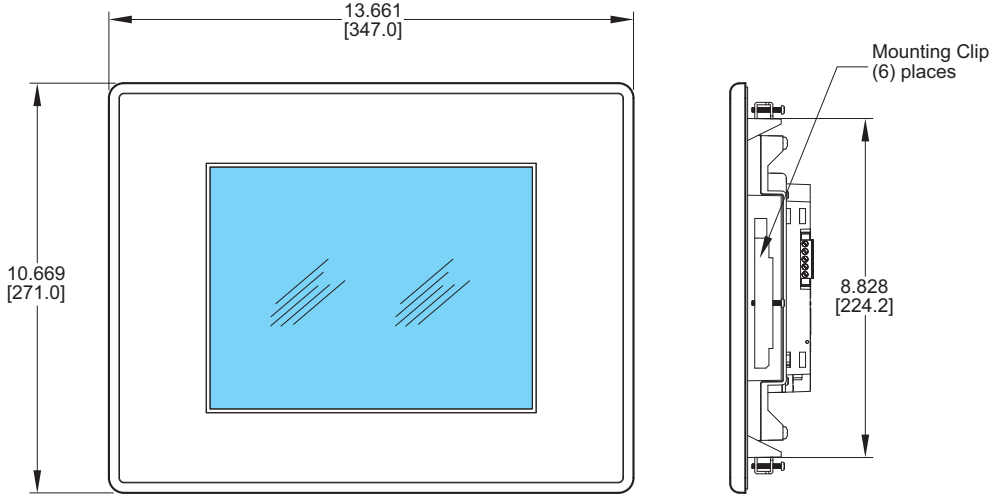

Enclosure Mounting Thickness Ranges and Mounting Clip Screw Torque

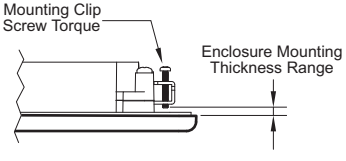

Touch Panel Size	Enclosure Thickness Range	Mounting Clip Screw Torque
8”, 10”, 12” & 15”	0.039 - 0.20 inch [1 – 5 mm]	42 ~ 57 oz-in [0.3 ~ 0.4 Nm]

C

EA7-T10C
Original Mounting Clips

Cutout Dimensions:

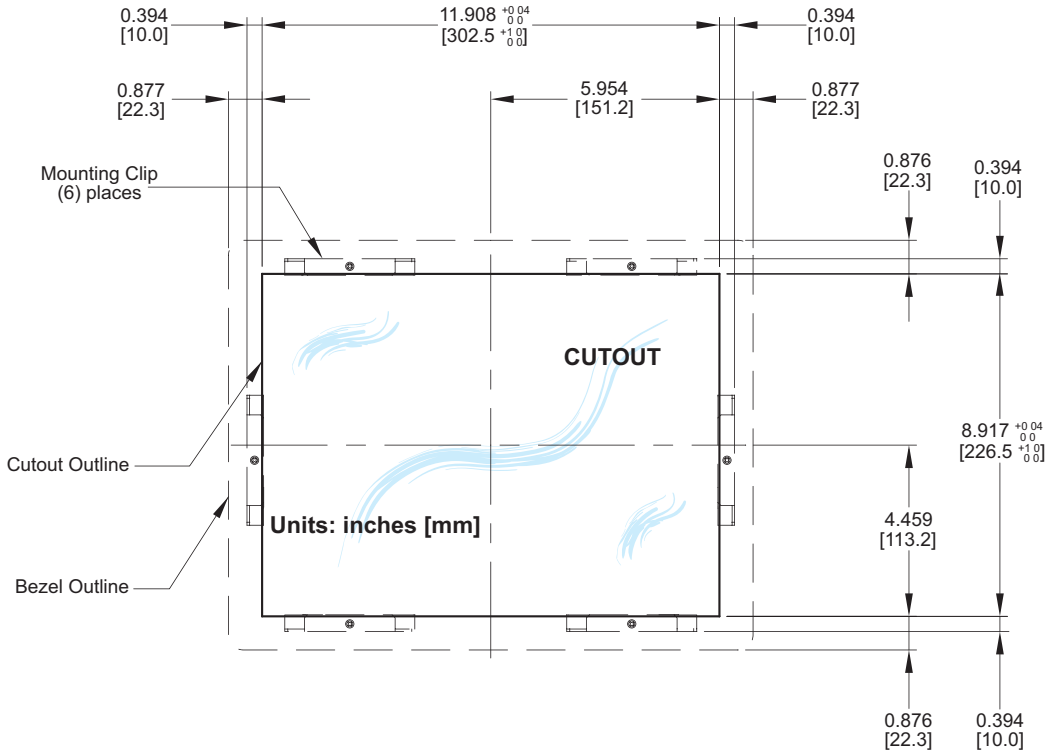

C

EA7-T12C
Original Mounting Clips

Dimensions:

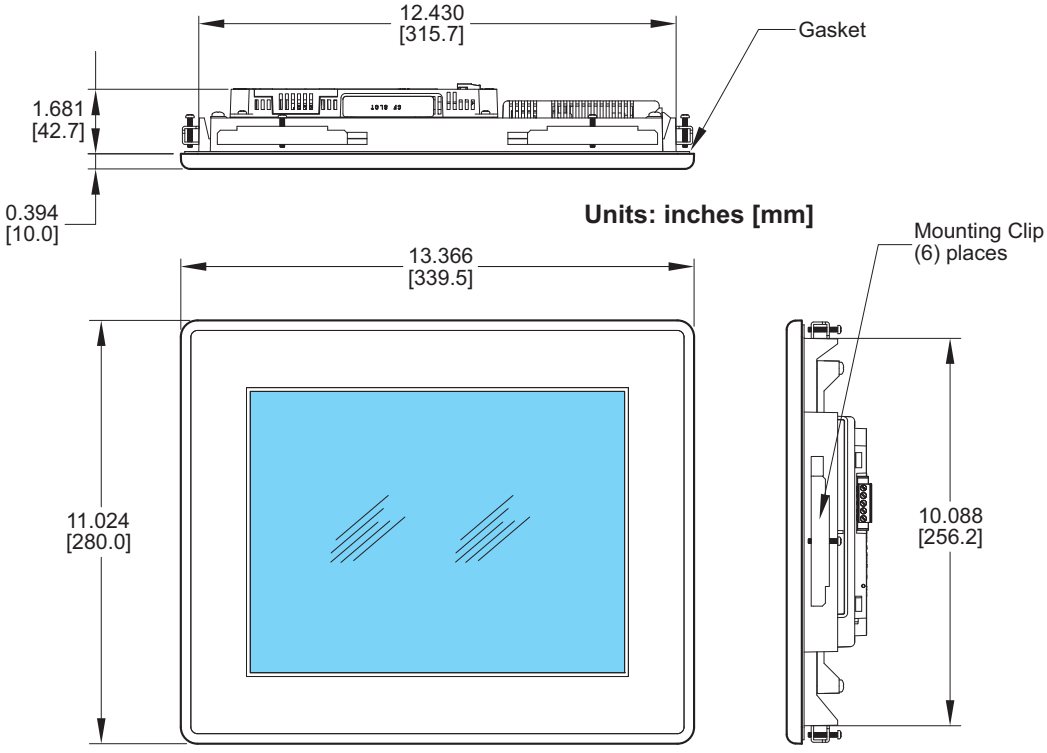

Enclosure Mounting Thickness Ranges and Mounting Clip Screw Torque

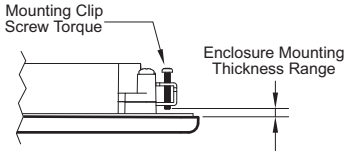

Touch Panel Size	Enclosure Thickness Range	Mounting Clip Screw Torque
8”, 10”, 12” & 15”	0.039 - 0.20 inch [1 – 5 mm]	42 ~ 57 oz-in [0.3 ~ 0.4 Nm]

C

EA7-T12C
Original Mounting Clips

Cutout Dimensions:

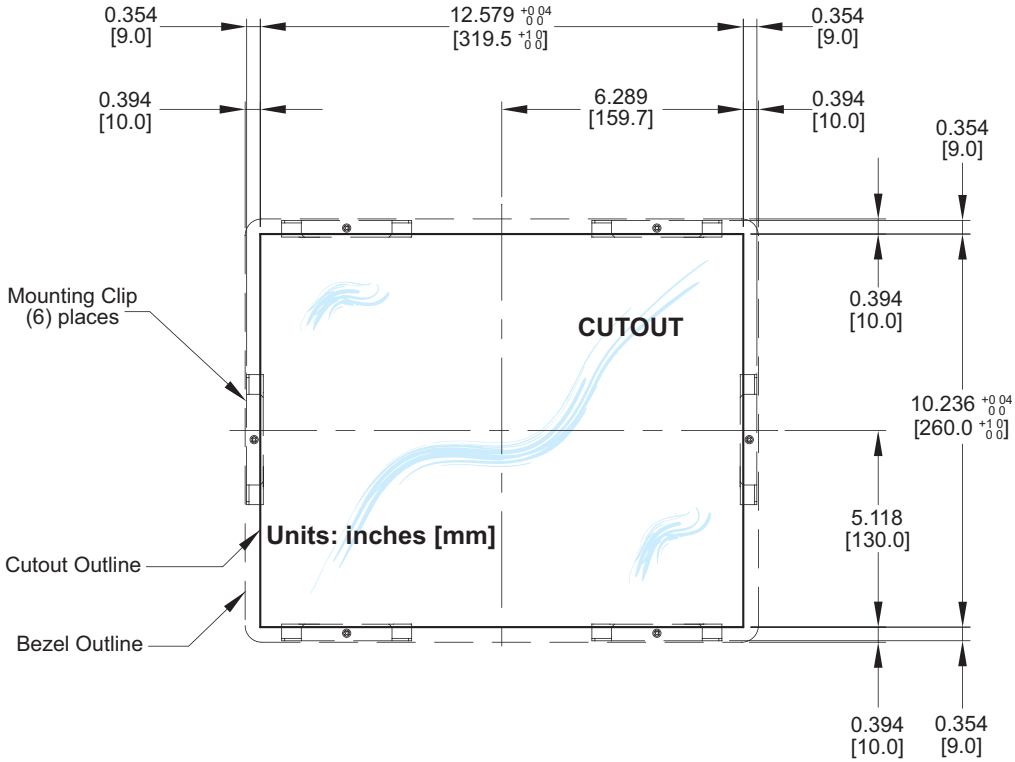

C

EA7-T15C
Original Mounting Clips

Dimensions:

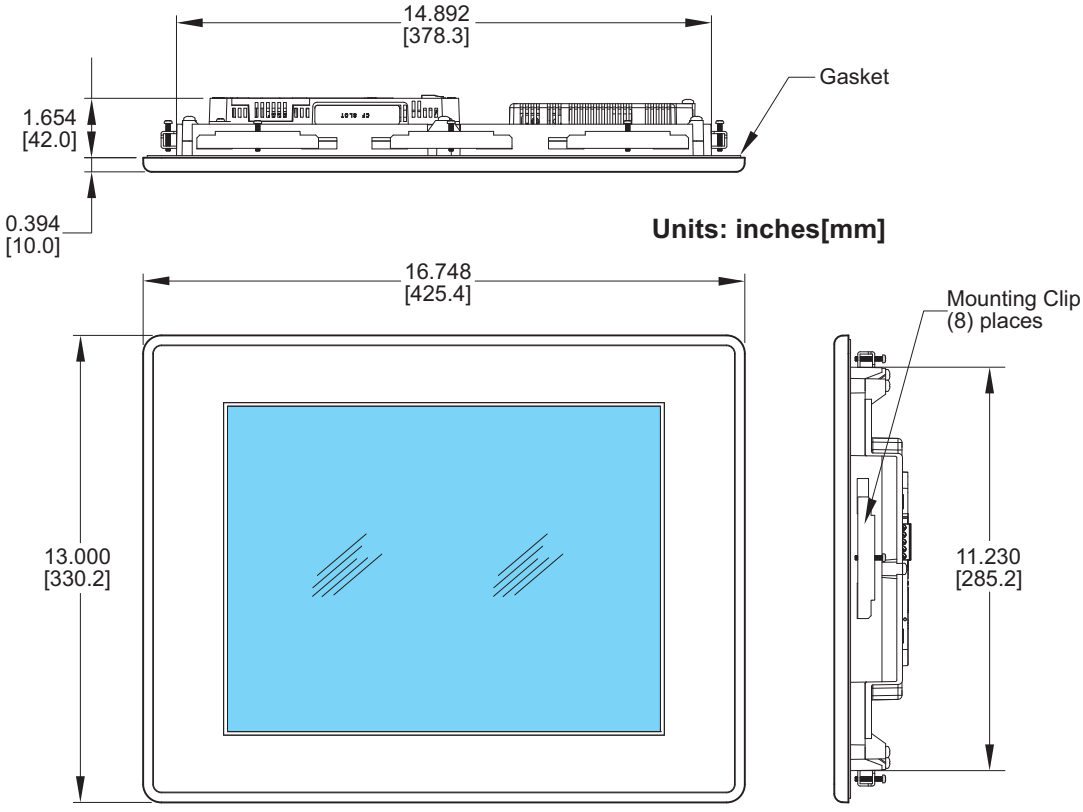

Enclosure Mounting Thickness Ranges and Mounting Clip Screw Torque

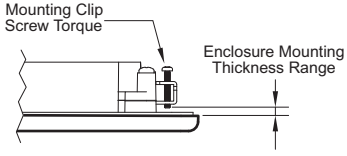

Touch Panel Size	Enclosure Thickness Range	Mounting Clip Screw Torque
8”, 10”, 12” & 15”	0.039 - 0.20 inch [1 – 5 mm]	42 ~ 57 oz-in [0.3 ~ 0.4 Nm]

EA7-T15C
Original Mounting Clips

C

Cutout Dimensions:

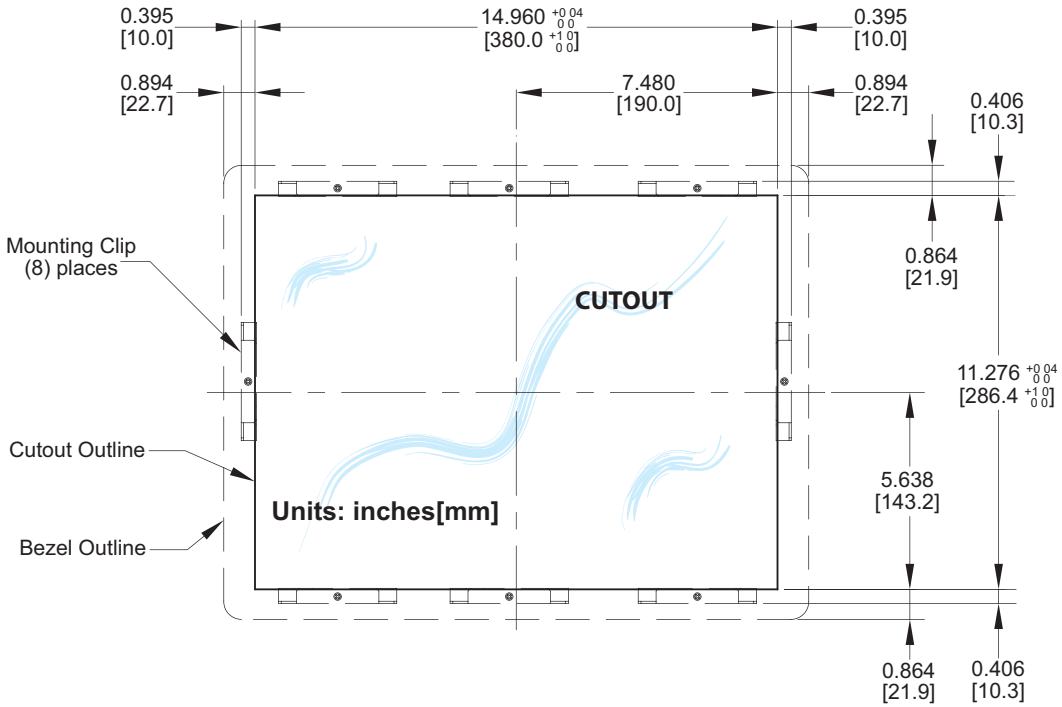

Index

6” Adapter Plate, 4–9
6” Adapter Plate Assembly, 3–18
6” Adapter Plate Cutout Dimensions, 3–17, 4–10
6” Adapter Plate Dimensions, 3–17, 4–10
6” Adapter Plate Installation, 3–18

A

AC Wiring Diagram, 4–14
AC/DC power adapter, 1–4
AC/DC Power Adapter, 3–5
AC/DC Power Adapter Dimensions, 3–7
AC/DC Power Adapter Installation, 3–8
AC/DC Power Adapter Specifications, 3–6
AC/DC Power Adapter Wiring, 3–5
Accessories, 3–2
Accessories at a glance, 3–4
Accessories Overview, 3–3
Adapter Plate, 3–17
Agency Approvals, 4–12
Analog touch screen, 1–4
Available Models, 2–2

C

C-more Touch Panel Error Code Table, A–3
CF Card Interface Module, 3–12
CF Card Interface Module Installation, 3–13
Chemical Compatibility, 2–25
Comm Port Adapter, 3–19

Communications Ports, 2–19
Ethernet Port, 2–19
PLC Port, 2–20
Sound Interface (Audio Line Out), 2–20
USB Port A, 2–20
USB Port B, 2–20
CompactFlash Memory, 3–14
CompactFlash Memory Card Installation, 3–15
Conventions Used, 1–3
Cutout Dimensions, 4–4
EA7-S6M-R, S6C-R, T6CL-R, S6M, S6C, T6C and T6CL, 4–4
EA7-T10C, 4–6
EA7-T12C, 4–7
EA7-T15C, 4–8
EA7-T8C, 4–5
cutout template, 4–3

D

Data Logging - Memory Device Full, 2–24
Data Logging Function and Logging Media, 2–24
Date Code, 1–5
DC Wiring Diagram, 4–13
Dimensions, 2–8
EA7-S6M-R, S6C-R, T6CL-R, S6M, S6C, T6C and T6CL, 2–8
EA7-T10C, 2–12
EA7-T12C, 2–14
EA7-T15C, 2–16
EA7-T8C, 2–10
DirectLOGIC PLCs Password Protection, 6–2

E

E-mail client, 1–4
EA-AC, 1–15
Enclosure Mounting Thickness Ranges, 4–4, 4–5, 4–6, 4–7, 4–8
Error Log Code, B–2
Error Message(s), B–2

Event Manager, 1–4
Expansion Assembly, 3–9
Expansion Assembly Details, 3–9
Expansion Assembly Dimensions, 3–9
Expansion Assembly Installation, 3–10
External Memory Devices, 2–23
EZTouch, 4–9
EZTouch Conversion and Mounting, 1–6
EZTouch Touch Panel Cross Reference to C-more, 1–7

F

FTP client/server, 1–4

I

Installation and Wiring, 4–3
    Introduction, 4–3

L

LED Status Indicator, 4–13

M

Maintenance, 7–2
    Adjust Touch Panel, 7–4
    Check Error Log, 7–4
    Check Memory Usage, 7–4
    Check Physical Conditions, 7–3
    Check Project Functionality, 7–6
    Check/Adjust Display Brightness or Contrast, 7–4
    Checks from C-more Programming Software, 7–6
    Cleaning the Display Screen, 7–5
    CPU LED indicator, 7–2
    Operating Environment, 7–2
    Operating Voltage, 7–2
    Power LED (PWR) indicator, 7–2
    Project Backup, 7–2
    Replace Battery Periodically, 7–5

Run Tests under System Setup Screens, 7–3
Status Indicators, 7–2
Test Beeper/Sound, 7–3
Test Comm. Port, 7–3
Test Display, 7–3
Test Touch Panel, 7–3
TxD and RxD LED, 7–2
Marine Use, 4–12
Memory Menu, 5–35
Backup, 5–37
Project Executed from CompactFlash (CF Slot #1), 5–36
Memory Organization, 2–22
Model Specifications, 2–3
Mounting Clearances, 2–18, 4–11
6” Adapter Plate Assembly, 4–9
air flow, 4–11
Mounting Clip Screw Torque, 2–8, 2–10, 2–12, 2–14, 2–16, 4–4, 4–5, 4–6, 4–7, 4–8
mounting clips, 4–3
Mounting Clips, 1–3
New Style, 1–3
Mounting Clips Prior April 2006, C–2
EA7-S6M-R, S6C-R, T6CL-R, S6M, S6C, T6C and T6CL, C–3
EA7-T10C, C–7
EA7-T12C, C–9
EA7-T15C, C–11
EA7-T8C, C–5
Mounting Thickness Ranges, 2–8, 2–10, 2–12, 2–14, 2–16

P

Panel Depth, 3–2, 3–7, 3–9, 3–19
AC/DC Power Adapter Installed, 3–7
Expansion Assembly Installed, 3–9
Panel Error Code P495, A–36
Omron, A–36
Panel Error Code PLC-496, 497 and 498, A–10
Allen-Bradley EtherNet/IP Protocol, A–10

Panel Error Code PLC-499, A–5
Allen-Bradley, A–7
DirectLOGIC, A–5
Modbus Protocols, A–6
AutomationDirect CLICK, A–6
AutomationDirect DirectLOGIC - Modbus (Koyo), A–6
Entivity Modbus RTU, A–6
Modicon Modbus RTU, A–6
Omron, A–31
Siemens, A–38
Part Number Key, 1–5
PLC Communication Cables & Wiring Diagrams, 6–5, 6–6
PLC Compatibility Table, 6–3, 6–4
PLC Error Codes
Allen-Bradley – EtherNet/IP Protocol, A–11
Allen-Bradley DF1 & DH485 Protocols, A–8
DirectLOGIC K-Sequence Protocol, A–5
GE 90-30 SNPX Protocol, A–22
Generic EtherNet IP Protocol, A–20
Mitsubishi FX Protocol, A–31
Modbus Protocols, A–6
AutomationDirect CLICK, A–6
AutomationDirect DirectLOGIC - Modbus (Koyo), A–6
Entivity Modbus RTU, A–6
Modicon Modbus RTU, A–6
Omron CS/CJ FINS Ethernet Protocol, A–37
Omron FINS Protocol, A–33
Omron Host Link Protocol, A–32
Siemens ISO over TCP Protocol, A–40
Siemens PPI Protocol, A–39
PLCs and protocols, 6–2
Allen-Bradley, 6–20
AutomationDirect CLICK and Direct LOGIC PLCs RS-232C Serial, 6–7
Direct LOGIC PLCs RS-422A/RS-485A, 6–10
Direct LOGIC Universal Converter, p/n F2-UNICON, 6–15
Direct LOGIC Universal Isolated Network Adapter, p/n FA-ISOCON, 6–14
GE, 6–24

GE VersaMax Micro, 6–24
Mitsubishi, 6–25
Modicon Micro Series, 6–27
Modicon ModBus RS-232, 6–27
Modicon ModBus with RJ45, 6–27
Omron, 6–26
Siemens, 6–28
Ports & Memory Expansion, 2–9, 2–11, 2–13, 2–15, 2–17
Power Fault, 4–14
Power Loss Detection and Power Retention Period, 2–24
Product Overview, 1–4
Products with CE marks, 4–2
Providing Power to the Touch Panel, 4–13

Q

Quick Start Steps, 1–9
Step 1 – Unpack and Inspect, 1–9
Step 10 – Install the Programming Software and Develop a Project, 1–13
Step 2 – Assemble Temporary Support Stand, 1–10
Step 3 – Install Optional Hardware Accessories, 1–11
Step 4 – Become Familiar with Available Communication Ports, 1–12
Step 5 – Connect Touch Panel to Computer, 1–14
Step 6 – Provide Power to the Touch Panel, 1–15
Step 7 – Access the Touch Panel Setup Screens, 1–16
Step 8 – Choose Touch Panel to PLC Protocol & Cables, 1–17
Step 9 – Connect Touch Panel to PLC, 1–20

R

Replacement Parts, 9–1
6-15” Panel Gasket Replacements – EA-xx-GSK, 9–11
Installation Instructions, 9–11
6” Adapter Plate Gasket Replacement – EA-6-ADPTR-GSK, 9–14
Gasket Replacement Instructions, 9–14
6” Panel Mounting Clip Replacements – EA-BRK-1, 9–5
Installation Instructions, 9–5
8-15” Panel Backlight Bulb Replacements – EA-xx-BULB, 9–8
Installation Instructions Example, 9–8

8-15” Panel Bezel Replacement – EA-xx-BEZEL, 9–12
Replacement Instructions Example, 9–12
8–15” Panel Mounting Clip Replacements– EA-BRK-2, 9–6
Installation Instructions, 9–6
AC Power Adapter Connector Replacement– EA-AC-CON, 9–7
Battery Replacement – D2-BAT-1, 9–3
Battery Replacement Instructions, 9–3
DC Panel Power Connector Replacement – EA-DC-CON, 9–7
Replacement Parts at a Glance, 9–2
Replacement Parts Overview, 9–2
RS-422A/RS-485A Multi-Drop Wiring Diagram Examples, 6–16
Runtime Errors, B–3
Introduction, B–2

S

Safety Guidelines, 4–2
Screen Covers, 3–22
Non-glare, 3–22
Serial Number, 1–5
Setting Menu, 5–19
Adjust Clock, 5–20
Adjust Display, 5–21
Beeper, 5–23
IP Address Setting, 5–24
Specification, 2–4
12” and 15” Full Feature Models, 2–7
6” Base Feature Models, 2–4
6” Full Feature Models, 2–5
8” and 10” Full Feature Models, 2–6
Supplemental Manuals, 1–2
SYS ERR ERRORCODE, B–2
System Setup Screens, 5–1
Error tab, 5–18
Flowchart, 5–13
General tab, 5–15
Information, 5–15, 5–16, 5–17, 5–18
Main Menu, 5–14

Memory tab, 5–16
Ports tab, 5–17

T

Tag Code Error Value, B–2
Technical Support, 1–2
Terminal Block Adapter, 3–20
Test Menu, 5–25
PLC Enquiry Test: Ethernet Connection, 5–32
PLC Enquiry Test: Serial Connection, 5–30
Serial Port Test, 5–29
Test Beep/Sound, 5–33
Test Communication Ports: Ethernet, 5–31
Test Communication Ports: Serial, 5–28
Test Display, 5–27
Test Touch Panel, 5–26
Troubleshooting
Data not Logging Problems, 8–20
Difficulty Connecting to the Panel over the Internet, 8–17
Internet Access, 8–17
Remote Access, 8–17
Display is Blank, 8–5
Display is Dim, 8–6
Electrical Noise Problems, 8–21
IP Address in System Setup Screens displays 0.0.0.0, 8–16
Loss of Date/Time and Retentive Data, 8–21
No Communications between Panel and PC, 8–8
No Communications between Panel and PLC, 8–13
No User Program, 8–7
Panel Constantly Displays “Initializing” when Powering up, 8–20
PLC Protocol Error Codes, 8–18
Toubleshooting Flow Chart, 8–3
Touch Panel does not Power up, 8–4
Touch Panel Runtime Errors, 8–19

U

USB Pen Drive, 3–24
USB Programming Cable, 1–14

W

WARNING, 3–4
WAV File Specifications, 2–21
Web server, 1–4
Wiring Guidelines, 4–12

Automation Direct®

User Manual

Allen-Bradley

Compact GuardLogix Controllers

Catalog Numbers 1768-L43S, 1768-L45S

Allen-Bradley • Rockwell Software

Rockwell Automation

Important User Information

Solid-state equipment has operational characteristics differing from those of electromechanical equipment. Safety Guidelines for the Application, Installation and Maintenance of Solid State Controls (publication SGI-1.1 available from your local Rockwell Automation sales office or online at http://www.rockwellautomation.com/literature/) describes some important differences between solid-state equipment and hard-wired electromechanical devices. Because of this difference, and also because of the wide variety of uses for solid-state equipment, all persons responsible for applying this equipment must satisfy themselves that each intended application of this equipment is acceptable.

In no event will Rockwell Automation, Inc. be responsible or liable for indirect or consequential damages resulting from the use or application of this equipment.

The examples and diagrams in this manual are included solely for illustrative purposes. Because of the many variables and requirements associated with any particular installation, Rockwell Automation, Inc. cannot assume responsibility or liability for actual use based on the examples and diagrams.

No patent liability is assumed by Rockwell Automation, Inc. with respect to use of information, circuits, equipment, or software described in this manual.

Reproduction of the contents of this manual, in whole or in part, without written permission of Rockwell Automation, Inc., is prohibited.

Throughout this manual, when necessary, we use notes to make you aware of safety considerations.

	WARNING: Identifies information about practices or circumstances that can cause an explosion in a hazardous environment, which may lead to personal injury or death, property damage, or economic loss.
	ATTENTION: Identifies information about practices or circumstances that can lead to personal injury or death, property damage, or economic loss. Attentions help you identify a hazard, avoid a hazard, and recognize the consequence
	SHOCK HAZARD: Labels may be on or inside the equipment, for example, a drive or motor, to alert people that dangerous voltage may be present.
	BURN HAZARD: Labels may be on or inside the equipment, for example, a drive or motor, to alert people that surfaces may reach dangerous temperatures.
IMPORTANT	Identifies information that is critical for successful application and understanding of the product.

Rockwell Automation, Allen-Bradley, TechConnect, ControlLogix, GuardLogix, CompactBlock Guard I/O, ArmorBlock Guard I/O, ControlFlash, Logix, Logix5000, RSLogix 5000, RSNetWorx for EtherNet/IP, RSNetWorx for DeviceNet, RSNetWorx for ControlNet, and RSLinx are trademarks of Rockwell Automation, Inc.

Trademarks not belonging to Rockwell Automation are property of their respective companies.

The information below summarizes the changes to this manual since the last publication.

To help you find new and updated information in this release of the manual, we included change bars as shown to the right of this paragraph.

Topic	Page
Compact GuardLogix controllers are supported in RSLogix 5000, version 19	20
Default connection type for produced and consumed safety tags is unicast	68

Preface

Introduction 9
About This Publication 9
Who Should Use This Publication 9
Additional Resources 10
Understanding Terminology 11

Chapter 1

System Overview

Introduction 13
Safety Application Requirements 13
Safety Network Number 14
Safety Task Signature 14
Distinguishing Between Standard and Safety Components 15
HMI Devices 15
Controller Data Flow Capabilities 16
Selecting System Hardware 17
Controller 17
Placing 1768 Modules 17
Placing 1769 Modules 18
Selecting Safety I/O Modules 18
Selecting Communication Networks 19
Programming Requirements 20

Chapter 2

Configure the Controller

Introduction 23
Create a Controller Project 23
Set Passwords for Safety-locking and -unlocking 25
Handling I/O Module Replacement 26
Enable Time Synchronization 26
Configure a Peer Safety Controller 27

Chapter 3

Communicate Over Networks

Introduction 31
The Safety Network 31
Managing the Safety Network Number (SNN) 31
Assigning the Safety Network Number (SNN) 33
Changing the Safety Network Number (SNN) 33
EtherNet/IP Communication 37
Producing and Consuming Data via an EtherNet/IP Network . . . 37
Connections Over the EtherNet/IP Network 38
EtherNet/IP Communication Example 38
EtherNet/IP Connections for CIP Safety I/O 39
Standard EtherNet/IP Connections 40
ControlNet Communication 41
Producing and Consuming Data via a ControlNet Network 41

Connections Over the ControlNet Network. 41
ControlNet Communication Example 42
ControlNet Connections for Distributed I/O 43
Standard DeviceNet Communication. 44
Serial Communication. 45

Chapter 4

Add, Configure, Monitor, and Replace CIP Safety I/O

Introduction. 47
Adding CIP Safety I/O Modules 47
Configure CIP Safety I/O Modules via RSLogix 5000 Software 48
Setting the Safety Network Number (SNN) 49
Setting the Connection Reaction Time Limit. 49
Specify the Requested Packet Interval (RPI) 50
View the Maximum Observed Network Delay 50
Setting the Advanced Connection Reaction Time Limit Parameters 51
Understanding the Configuration Signature. 53
Configuration via RSLogix 5000 Software 53
Different Configuration Owner (Listen Only Connection) 54
Reset Safety I/O Module Ownership. 54
Addressing Safety I/O Data 54
Monitor Safety I/O Module Status 56
Replacing a CIP Safety I/O Module. 57
Prepare the I/O Module. 57
Replace an I/O Module with Configure Only Selected. 58
Replace I/O with Configure Always Enabled. 60

Chapter 5

Develop Safety Applications

Introduction. 61
The Safety Task 62
Safety Task Period Specification 62
Safety Task Execution. 63
Safety Programs 64
Safety Routines. 64
Safety Tags. 64
Tag Type 65
Data Type 66
Scope 66
Class. 67
Constant Value. 68
External Access 68
Produced/Consumed Safety Tags. 68
Produce a Safety Tag. 69
Consume Safety Tag Data 70
Safety Tag Mapping 74

Restrictions 74
Create Tag Mapping Pairs 75
Monitor Tag Mapping Status 76
Safety Application Protection 76
Safety-lock the Controller 76
Generate a Safety Task Signature 78
Software Restrictions 79
Additional Resources 80

Chapter 6

Go Online with the Controller

Introduction 81
Connecting the Controller to the Network 81
Connect the Controller via a Serial Network 82
Connect Your EtherNet/IP Device and Computer 82
Connect Your ControlNet Communication Module and Your Computer 83
Configuring the Network Driver 83
Configure a Serial Communication Driver 83
Configuring an EtherNet/IP or ControlNet Driver 84

Understanding the Factors that Affect Going Online 84
Project to Controller Matching 84
Firmware Revision Matching 85
Safety Status/Faults 85
Safety Task Signature and Safety-locked and -unlocked Status 85
Download 87
Upload 89
Go Online 90

Chapter 7

Monitor Status and Handle Faults

Introduction 93
Monitor Controller Status 93
Controller Status Indicators 93
Online Bar 95
Monitoring Connections 96
All Connections 96
Safety Connections 96
Monitoring Status Flags 97
Monitor Safety Status 97
Controller Faults 98
Nonrecoverable Controller Faults 98
Nonrecoverable Safety Faults in the Safety Application 98
Recoverable Faults in the Safety Application 98
Viewing Faults 99
Fault Codes 99

Developing a Fault Routine 99
Program Fault Routine 100
Controller Fault Handler 100
Use GSV/SSV Instructions 100

Chapter 8

Store and Load Projects Using Nonvolatile (Removable) Memory

Introduction 105
Storing a Safety Project 106
Loading a Safety Project 107
Manage Firmware with Firmware Supervisor 108

Appendix A

Controller Specifications

Introduction 109
Certifications 109
General Specifications 110
Safety Specifications 111
Environmental Specifications 112
Environment and Enclosure Information 113
North American Hazardous Location Approval 113
European Hazardous Location Approval 114

Appendix B

Change Controller Type in RSLogix 5000 Projects

Introduction 115
Changing from a Standard to a Safety Controller 115
Changing from a Safety to a Standard Controller 116
Changing from a 1756 GuardLogix to a 1768 Compact GuardLogix Controller or Vice Versa 117
Additional Resources 117

Index 119

Introduction

Read this preface to familiarize yourself with the rest of the manual.

Topic	Page
About This Publication	9
Who Should Use This Publication	9
Additional Resources	10
Understanding Terminology	11

About This Publication

This manual is a guide for using Compact GuardLogix controllers. It describes the Compact GuardLogix-specific procedures you use to configure, operate, and troubleshoot your controller.

For detailed information on related topics like programming your Compact GuardLogix controller, SIL 3/PLe requirements, or information on standard Logix components, see the list of Additional Resources on page 10.

Who Should Use This Publication

Use this manual if you are responsible for designing, installing, programming, or troubleshooting control systems that use Compact GuardLogix controllers.

You must have a basic understanding of electrical circuitry and familiarity with relay logic. You must also be trained and experienced in the creation, operation, and maintenance of safety systems.

Additional Resources

These documents contain additional information about Compact GuardLogix controller systems.

Resource	Description
CompactLogix Controllers Installation Instructions, publication 1768-IN004	Provides information on installing Compact GuardLogix controllers
GuardLogix Controller Systems Safety Reference Manual, publication 1756-RM093	Contains detailed requirements for achieving and maintaining SIL 3/PLe with the GuardLogix controller system
GuardLogix Safety Application Instruction Set Reference Manual, publication 1756-RM095	Provides information on the GuardLogix Safety application instruction set
CompactBlock Guard I/O EtherNet/IP Safety Modules Installation Instructions, publication 1791ES-IN001	Provides information on installing CompactBlock Guard I/O EtherNet/IP Safety modules
Guard I/O EtherNet/IP Safety Modules User Manual, publication 1791ES-UM001	Provides information on using Guard I/O EtherNet/IP Safety modules
CompactLogix Controllers User Manual, publication 1768-UM001	Provides information on using CompactLogix controllers in standard applications
Logix5000 Controllers General Instruction Set Reference Manual, publication 1756-RM003	Provides information on the Logix5000 instruction set
Logix5000 Controllers Common Procedures Programming Manual, publication 1756-PM001	Provides access to the Logix5000 Controllers set of programming manuals, which covers managing project files, organizing tags, ladder logic programming, testing routines, creating Add-On Instructions, controller status data, handling faults, importing and exporting project components and more
EtherNet/IP Modules in Logix5000 Control Systems User Manual, publication ENET-UM001	Provides information on using EtherNet/IP communication modules in a Logix5000 control system
ControlNet Modules in Logix5000 Control Systems User Manual, publication CNET-UM001	Provides information on using the 1756-CNB module in Logix5000 control systems
Logix5000 Controllers Execution Time and Memory Use Reference Manual, publication 1756-RM087	Provides information on estimating the execution time and memory use for instructions
Logix5000 Controllers Import Export Reference Manual, publication 1756-RM084	Provides information on using RSLogix 5000 Import/Export utility
PhaseManager User Manual, publication LOGIX-UM001	Provides information on programming the controller to use equipment phases in a standard application
Motion Modules in Logix5000 Control Systems User Manual, publication LOGIX-UM002	Provides information on configuring the controller for motion axes, coordinate system, and motion modules in standard applications
Industrial Automation Wiring and Grounding Guidelines, publication 1770-4.1	Provides in-depth information on grounding and wiring programmable controllers

You can view or download publications at http://www.rockwellautomation.com/literature. To order paper copies of technical documentation, contact your local Rockwell Automation distributor or sales representative.

Understanding Terminology

This table defines terms used in this manual.

Table 1 - Terms and Definitions

Abbreviation	Full Term	Definition
1oo2	One Out of Two	Refers to the behavioral design of a multi-processor safety system.
CIP	Common Industrial Protocol	A communication protocol designed for industrial automation applications.
CIP Safety	Common Industrial Protocol – Safety Certified	SIL 3/PLe rated version of CIP.
DC	Diagnostic Coverage	The ratio of the detected failure rate to the total failure rate.
EN	European Norm.	The official European standard.
GSV	Get System Value	An instruction that retrieves specified controller-status information and places it in a destination tag.
—	multicast	The transmission of information from one sender to multiple receivers.
PC	Personal Computer	Computer used to interface with, and control, a Logix-based system via RSLogix 5000 programming software.
PFD	Probability of Failure on Demand	The average probability of a system to fail to perform its design function on demand.
PFH	Probability of Failure per Hour	The probability of a system to have a dangerous failure occur per hour.
PL	Performance Level	ISO 13849-1 safety rating.
RPI	Requested Packet Interval	The expected rate in time for production of data when communicating over a network.
SNN	Safety Network Number	A unique number that identifies a section of a safety network.
SSV	Set System Value	An instruction that sets controller system data.
—	Standard	An object, task, tag, program, or component in your project that is not a safety-related item.
—	unicast	The transmission of information from one sender to one receiver.

Notes:

System Overview

Introduction

Topic	Page
Safety Application Requirements	13
Distinguishing Between Standard and Safety Components	15
Controller Data Flow Capabilities	16
Selecting System Hardware	17
Selecting Safety I/O Modules	18
Selecting Communication Networks	19
Programming Requirements	20

Safety Application Requirements

The Compact GuardLogix controller system is certified for use in safety applications up to and including Safety Integrity Level (SIL) 3 and Performance Level (e) in which the de-energized state is the safe state. Safety application requirements include evaluating probability of failure rates (PFD and PFH), system reaction-time settings, and functional-verification tests that fulfill SIL 3/PLe criteria.

For SIL 3 and PLe safety system requirements, including functional validation test intervals, system reaction time, and PFD/PFH calculations, refer to the GuardLogix Controller Systems Safety Reference Manual, publication 1756-RM093. You must read, understand, and fulfill these requirements prior to operating a Compact GuardLogix SIL 3, PLe safety system.

Compact GuardLogix-based SIL 3/PLe safety applications require the use of at least one safety network number (SNN) and a safety task signature. Both affect controller and I/O configuration and network communication.

Safety Network Number

The safety network number (SNN) must be a unique number that identifies safety subnets. Each safety subnet that the controller uses for safety communication must have a unique SNN. Each CIP Safety device must also be configured with the safety subnet's SNN.

The SNN can be assigned automatically or manually.

For information on the SNN, see Managing the Safety Network Number (SNN) on page 31 of this manual. Also refer to the GuardLogix Controller Systems Safety Reference Manual, publication 1756-RM093.

Safety Task Signature

The safety task signature consists of an ID number, date, and time that uniquely identifies the safety portion of a project. This includes safety logic, data, and configuration. The Compact GuardLogix system uses the safety task signature to determine the project's integrity and to let you verify that the correct project is downloaded to the target controller.

See Generate a Safety Task Signature on page 78 for more information.

Creating, recording, and verifying the safety task signature is a mandatory part of the safety-application development process.

Refer to the GuardLogix Controller Systems Safety Reference Manual, publication 1756-RM093, for details.

Distinguishing Between Standard and Safety Components

Slots in the Compact GuardLogix backplane may be populated with other CompactLogix I/O modules that are certified to the Low Voltage and EMC Directives. Refer to http://www.ab.com/certification/ce to find the CE certificate for the Programmable Control – CompactLogix Product Family and determine which modules are certified.

You must create and document a clear, logical, and visible distinction between the safety and standard portions of the application. To aid in creating this distinction, RSLogix 5000 programming software features safety identification icons to identify the safety task, safety programs, safety routines, and safety components. In addition, the RSLogix 5000 software uses a safety class attribute that is visible whenever safety task, safety programs, safety routine, safety tag, or safety Add-On Instruction properties are displayed.

The controller does not allow writes to safety tag data from external HMI devices or via message instructions from peer controllers. RSLogix 5000 software can write safety tags when the Compact GuardLogix controller is safety-unlocked, does not have a safety task signature, and is operating without safety faults.

The 1768 CompactLogix Controllers User Manual, publication 1768-UM001, provides information on using 1768 CompactLogix controllers in standard (non-safety) applications.

HMI Devices

HMI devices can be used with Compact GuardLogix controllers. HMI devices can access standard tags just as with a standard controller. However, HMI devices cannot write to safety tags; safety tags are read-only for HMI devices.

Controller Data Flow Capabilities

This illustration explains the standard and safety data-flow capabilities of the Compact GuardLogix controller.

Figure 1 - Data Flow Capabilities

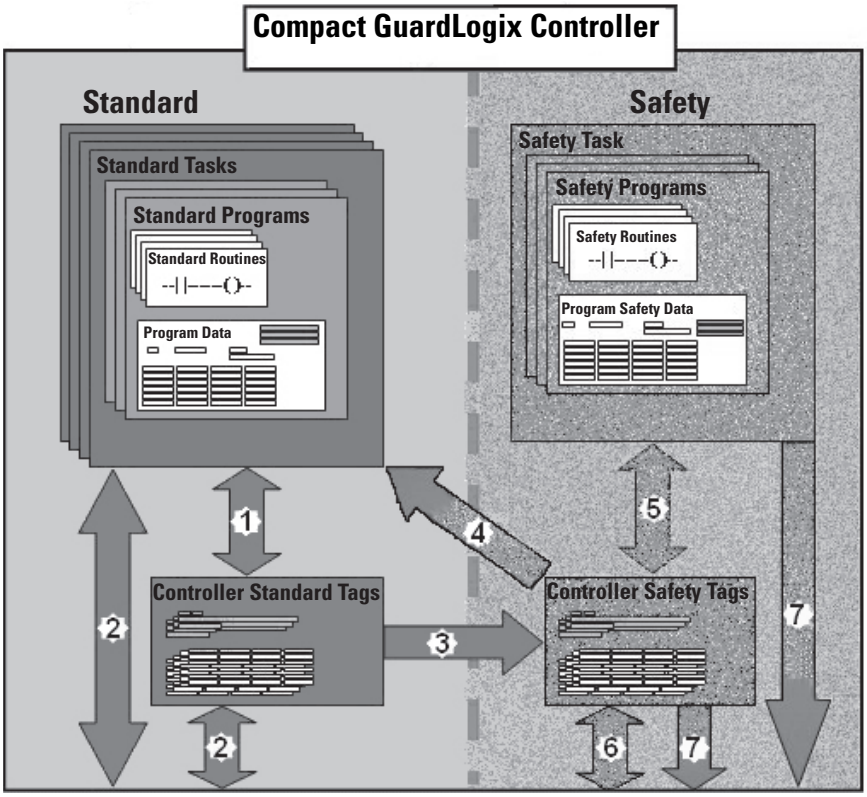

No.	Description	
1	Standard tags and logic behave the same way they do in the standard Logix platform.	
2	Standard tag data, program- or controller-scoped, can be exchanged with external HMI devices, personal computers, and other controllers.	
3	Compact GuardLogix controllers are integrated controllers with the ability to move (map) standard tag data into safety tags for use within the safety task.	
	⚠	**ATTENTION:** This data must not be used to directly control a SIL 3/PLe output.
4	Controller-scoped safety tags can be read directly by standard logic.	
5	Safety tags can be read or written by safety logic.	
6	Safety tags can be exchanged between safety controllers over Ethernet or ControlNet networks, including 1756 and 1768 GuardLogix controllers.	
7	Safety tag data, program- or controller-scoped, can be read by external devices, such as HMI devices, personal computers, or other standard controllers.	
	IMPORTANT	Once this data is read, it is considered standard data, not SIL 3/PLe data.

Selecting System Hardware

The Compact GuardLogix system supports SIL 3 and PLe safety applications.

Controller

1768-L43S and 1768-L45S controllers feature one built-in serial port. A keyswitch on the front panel lets you change controller modes: RUN, PROGram and REMote. The 1768 Compact GuardLogix controllers combine a 1768 backplane with a 1769 backplane. This combination includes all the advantages of the 1768 architecture for safety applications while retaining the 1769 I/O support for standard applications.

Controller	Available 1768 Slots	Number of 1768 Communication Modules	Maximum Local 1769 I/O Modules Supported	Number of Connections Supported	Safety Task Memory	Standard Memory
1768-L43S	2	2	16 Modules in 3 Banks	250	0.5 MB	2 MB
1768-L45S	4	2	30 Modules in 3 Banks		1 MB	3 MB

In addition, Compact GuardLogix controllers support 1768-M04SE SERCOS modules for motion control in standard (non-safety) applications. For information on developing motion applications, refer to the Motion Modules in Logix5000 Control Systems User Manual, publication LOGIX-UM002.

Placing 1768 Modules

- Up to two 1768 communication modules may reside between the controller and the power supply.
- The 1768 backplane requires one 1768 power supply.

Cat. No.	Description	Range
1768-PA3	Dual-input power supply	•86…265V AC •108…132V DC
1768-PB3	Single-input power supply	16.8…31.2V DC

- 1768 power supplies provide a 24V DC external power source.
- 1768 slots are numbered right to left, starting with the controller as slot 0.

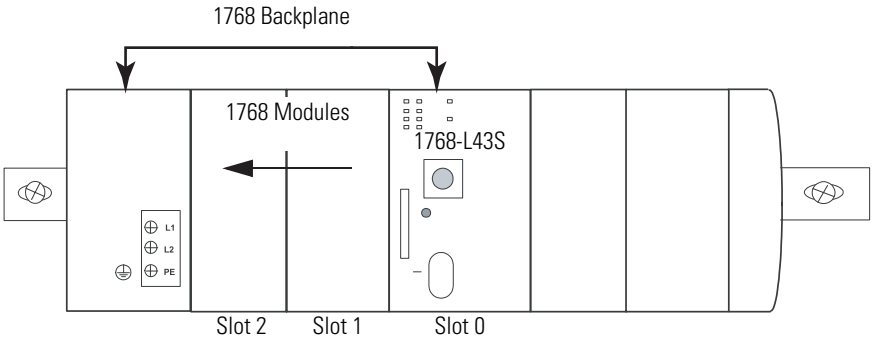

Placing 1769 Modules

- Up to eight 1769 I/O modules may be attached to the right of the 1768 system.
- 1769 I/O modules connected directly to the 1768 controller do not need a 1769 power supply.

IMPORTANT 1769 power supplies must be separated from the 1768 series processor by a bus extension cable. Never put a 1769 power supply in the 1768 backplane or the controller will generate a major fault that cannot be cleared until you remove the 1769 power supply.

- Additional 1769 I/O modules must be in up to 2 additional I/O banks.
- Each I/O bank must have its own 1769 power supply.
- Each 1769 I/O module has a power supply distance rating, which is the number of modules from the power supply.
- Place up to eight 1769 I/O modules to the left or right of the 1769 power supply in an I/O bank.
- Connect the I/O banks to the main bank by using standard 1769-CRL*x* extension cables.
- 1769 slots are numbered from left to right, starting with the controller as slot 0.

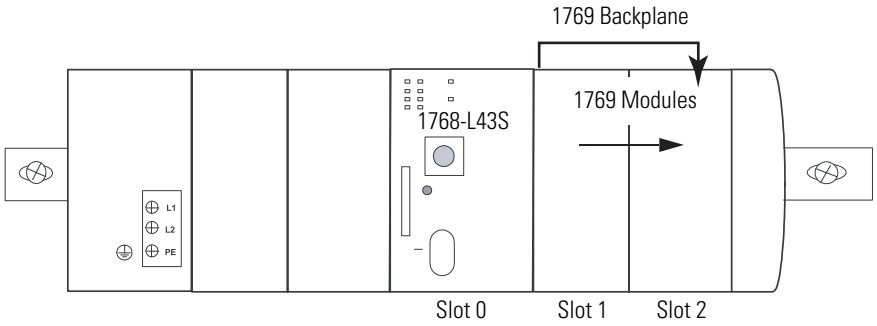

Selecting Safety I/O Modules

Safety input and output devices can be connected to CIP Safety I/O on EtherNet/IP networks, allowing output devices to be controlled by the Compact GuardLogix controller system via EtherNet/IP communication.

For the most up-to-date information on available CIP Safety I/O catalog numbers, certified series and firmware revisions, see http://www.ab.com/certification/safety.

Selecting Communication Networks

The Compact GuardLogix controller supports communication that lets it:

- distribute and control Safety I/O on EtherNet/IP networks.
- produce and consume safety tag data between 1756 and 1768 GuardLogix controllers across EtherNet/IP or ControlNet networks.
- distribute and control standard I/O on EtherNet, ControlNet, or DeviceNet networks.

Use these communication modules to provide an interface between Compact GuardLogix controllers and network devices.

Use this module	To interface between
1768-ENBT, series A, revision 3 (1)	The Compact GuardLogix controller and EtherNet/IP devices
1768-CNB, series A, revision 3(1)	Controllers on the ControlNet network

(1) This or later.

The Compact GuardLogix controller can connect to RSLogix 5000 programming software via a serial connection, a 1768-ENBT EtherNet module, or a 1768-CNB ControlNet module.

Table 2 - Additional Resources

Resource	Description
EtherNet/IP Modules in Logix5000 Control Systems User Manual, publication ENET-UM001	Contains information on configuring EtherNet/IP modules, interlocking and data transfer between controllers on the EtherNet/IP network, managing connections, and diagnostics
ControlNet Modules in Logix5000 Control Systems User Manual, publication CNET-UM001	Provides information on using ControlNet modules in Logix controller-based systems

Programming Requirements

RSLogix 5000 software, version 18 and later, is the programming tool for Compact GuardLogix controller applications. Safety routines include safety instructions, which are a subset of the standard ladder logic instruction set, and safety application instructions. Programs scheduled under the safety task support only ladder logic.

Table 3 - Supported Features by RSLogix 5000 Software Version

Feature	Version 18		Version 19	
	Safety Task	Standard Task	Safety Task	Standard Task
Add-On instructions	X	X	X	X
Alarms and events		X		X
Constant value tags	X	X	X	X
Equipment phase routines		X		X
External Access	X	X	X	X
Event tasks		X		X
Firmware Supervisor	X	X	X	X
Function block diagrams (FBD)		X		X
Integrated motion		X		X
Ladder logic	X	X	X	X
Language switching	X	X	X	X
Online import and export of program components		X		X
Sequential function chart (SFC) routines		X		X
Structured text		X		X
Unicast connections for produced and consumed safety tags			X	X

Compact GuardLogix controllers support 1768-M04SE SERCOS modules for motion control in standard (non-safety) applications. For information on developing motion applications, refer to the Motion Modules in Logix5000 Control Systems User Manual, publication LOGIX-UM002.

Compact GuardLogix controllers also support PhaseManager programs, which let you add equipment phases to standard controller applications. Refer to the PhaseManager User Manual, publication LOGIX-UM001, for more information.

For information on using these features, refer to the Logix5000 Controllers Common Procedures Programming Manual, publication 1756-PM001, the publications listed in the Additional Resources on page 21, and RSLogix 5000 software online help.

Table 4 - Additional Resources

Resource	Description
Chapter 5, Develop Safety Applications	Contains more information on the safety task, safety programs, and safety routines.
GuardLogix Controllers Systems Safety Reference Manual, publication 1756-RM093	Provides a list of the Safety Application instructions and the subset of standard ladder logic instructions that are approved for safety applications. Also contains more information on developing safety applications.
GuardLogix Safety Application Instruction Set Reference Manual, publication 1756-RM095	Provides detailed information on the safety application instructions.
Logix5000 Controllers Common Procedures Programming Manual, publication 1756-PM001	Provides information on programming Logix5000 controllers, including managing project files, organizing tags, programming and testing routines, and handling faults.
Logix5000 Controllers Add-On Instructions Programming Manual, publication 1756-PM010	Provides information on creating and using Add-On Instructions, including high-integrity and safety Add-On Instructions.
Logix5000 Controllers Controller Status and Information Programming Manual, publication 1756-PM015	Provides details on controller logging, as well as information on connection, memory, controller status data.
Import/Export Project Components Programming Manual, publication 1756-PM019	Contains guidelines and instructions for import and export of RSLogix 5000 project components.
Logix5000 General Instruction Set Reference Manual, publication 1756-RM003	Provides details on the standard Logix instructions.
Logix5000 Controller Import/Export Reference Manual, publication 1756-RM084	Provides detailed information and examples for using the import/export feature of RSLogix 5000 software.
PhaseManager User Manual, publication LOGIX-UM001	Provides information on programming the controller to use equipment phases in a standard application.
Motion Modules in Logix5000 Control Systems User Manual, publication LOGIX-UM002	Provides information on configuring the controller for motion axes, coordinate system, and motion modules in standard applications.

Notes:

Configure the Controller

Introduction

Topic	Page
Create a Controller Project	23
Set Passwords for Safety-locking and -unlocking	25
Handling I/O Module Replacement	26
Enable Time Synchronization	26
Configure a Peer Safety Controller	27

Create a Controller Project

To configure and program your controller, use RSLogix 5000 software to create and manage a project for the controller.

1. Create a project in RSLogix 5000 software by clicking the New button on the main toolbar.
2. From the Type pull-down menu, choose a Compact GuardLogix controller.

- 1768-L43S CompactLogix5343S Safety Controller
- 1768-L45S CompactLogix5345S Safety Controller

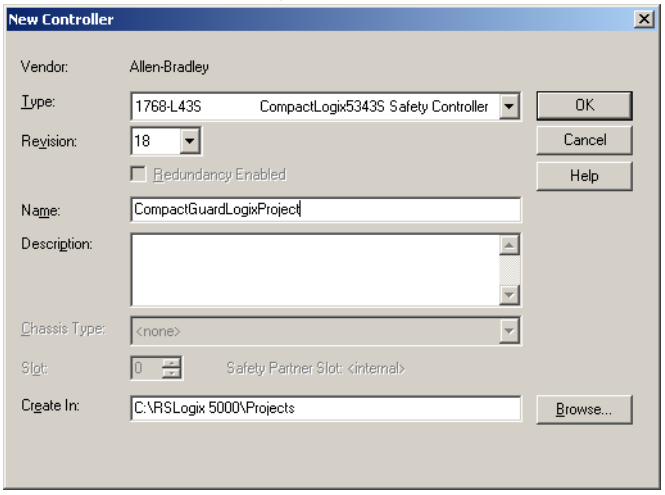

3. Enter the major revision of firmware for the controller.
4. Type a name for the controller.

   When you create a project, the project name is the same as the name of the controller. However, you can rename either the project or the controller.

5. Specify the folder in which to store the safety controller project.
6. Click OK.

RSLogix 5000 software automatically creates a safety task and a safety program.

A main ladder logic safety routine called MainRoutine is also created within the safety program.

Figure 2 - Safety Task in the Controller Organizer

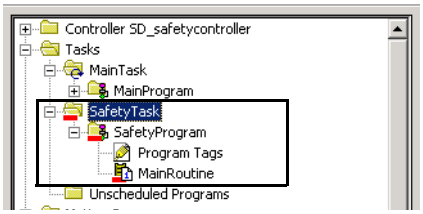

A red bar under the icon distinguishes safety programs and routines from standard project components in the RSLogix 5000 Controller Organizer.

When a new safety project is created, RSLogix 5000 software also automatically creates a time-based safety network number (SNN).

This SNN defines the Compact GuardLogix controller as a safety subnet. It can be viewed and modified via the General tab on the Controller Properties dialog box.

For most applications, this automatic, time-based SNN is sufficient. However, there are cases in which you might want to enter a specific SNN.

Figure 3 - Safety Network Number

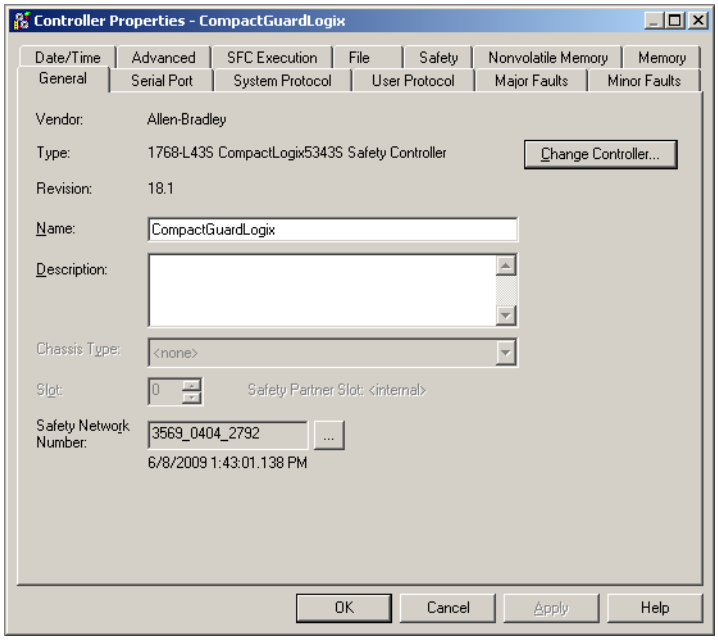

TIP You can use the Controller Properties dialog box to change the controller from standard to safety or vice versa by clicking Change Controller. However, standard and safety projects are substantially affected.

See Appendix B, Change Controller Type in RSLogix 5000 Projects, for details on the ramifications of changing controllers.

Table 5 - Additional Resources

Resource	Description
Chapter 5, Develop Safety Applications.	Contains more information on the safety task, safety programs, and safety routines
Chapter 3, Communicate Over Networks	Provides more information on managing the SNN

Set Passwords for Safety-locking and -unlocking

Safety-locking the controller helps protect safety control components from modification. Only safety components, such as the safety task, safety programs, safety routines, and safety tags are affected. Standard components are unaffected. You can safety-lock or -unlock the controller project when online or offline.

The safety-lock and -unlock feature uses two separate passwords. Passwords are optional.

Follow these steps to set passwords.

1. Choose Tools > Safety > Change Password.
2. From the What Password pull-down menu, choose either Safety Lock or Safety Unlock.

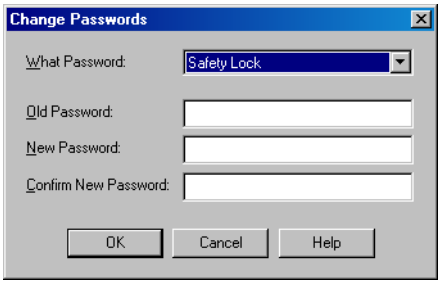

3. Type the old password, if one exists.
4. Type and confirm the new password.
5. Click OK.

   Passwords may be from 1...40 characters in length and are not case-sensitive. Letters, numerals, and the following symbols may be used: ‘ ~ ! @ # $ % ^ & * ( ) _ + , - = { } | [ ] \ : ; ? / .

Handling I/O Module Replacement

The Safety tab of the Controller Properties dialog box lets you define how the controller handles the replacement of an I/O module in the system. This option determines whether the controller sets the safety network number (SNN) of an I/O module to which it has a connection and for which it has configuration data when a safety task signature[(1)] exists.

Figure 4 - I/O Module Replacement Options

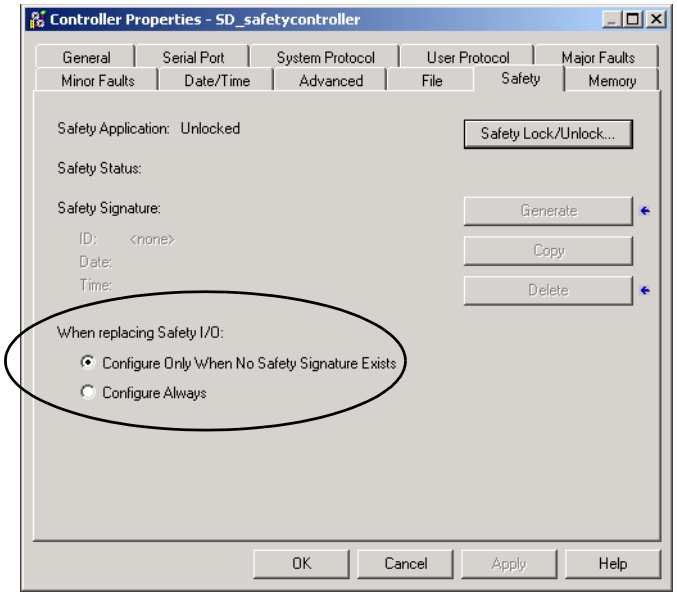

ATTENTION: Enable the Configure Always feature only if the entire routable CIP Safety Control System is not being relied on to maintain SIL 3 during the replacement and functional testing of a module.

See Replacing a CIP Safety I/O Module on page 57 for more information.

Enable Time Synchronization

In a Compact GuardLogix controller system, Time Synchronization must be enabled for the controller. To allow the controller to become the CST master, enable Time Synchronization on the Date/Time tab of the Controller Properties dialog box. Time Synchronization provides a standard mechanism to synchronize clocks across a network of distributed devices.

(1) The safety task signature is a number used to uniquely identify each project's logic, data, and configuration, thereby protecting the system's safety integrity level (SIL). See Safety Task Signature on page 14 and Generate a Safety Task Signature on page 78 for more information.

Figure 5 - Date/Time Tab

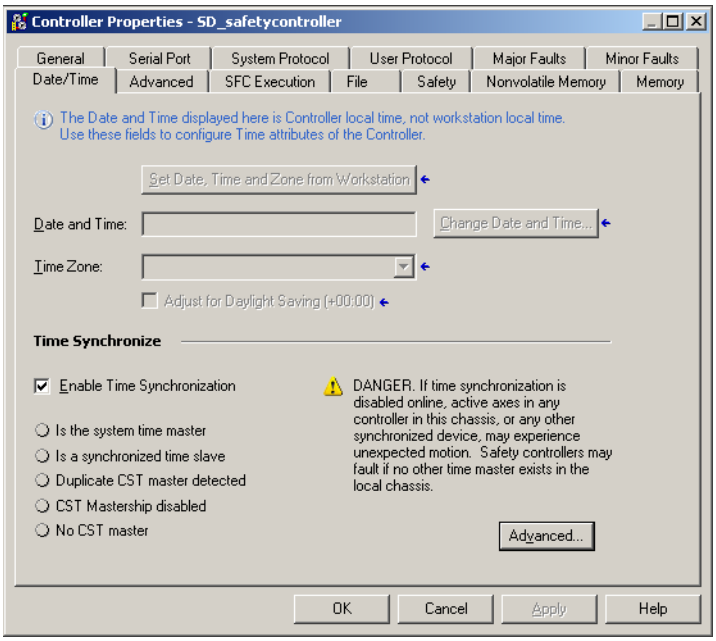

For more information on Time Synchronization, refer to the Integrated Architecture and CIP Sync Configuration Application Solution, publication IA-AT003.

Configure a Peer Safety Controller

You can add a remote peer safety controller to the I/O configuration folder of your safety project to allow standard or safety tags to be consumed.

The peer safety controller is subject to the same configuration requirements as the local safety controller. The peer safety controller must also have a safety network number (SNN). To share safety data between peer controllers, you produce and consume controller-scoped safety tags. Produced/consumed safety tag pairs must be of the same data type.

To share data between peer safety controllers, the following additional requirements must be met:

- The SNN entered on the producer controller's Module Properties dialog box in the consumer's safety project must match the SNN that is configured in the producer controller's project, as shown on the producer controller's Controller Properties dialog box.

Producer Controller Properties Dialog Box in Consumer Project

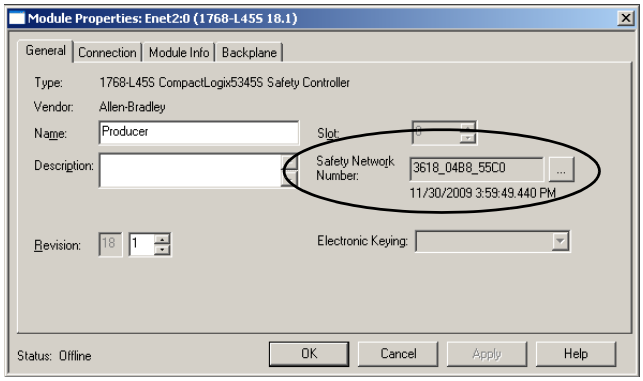

Producer Controller Properties Dialog Box in Producer Project

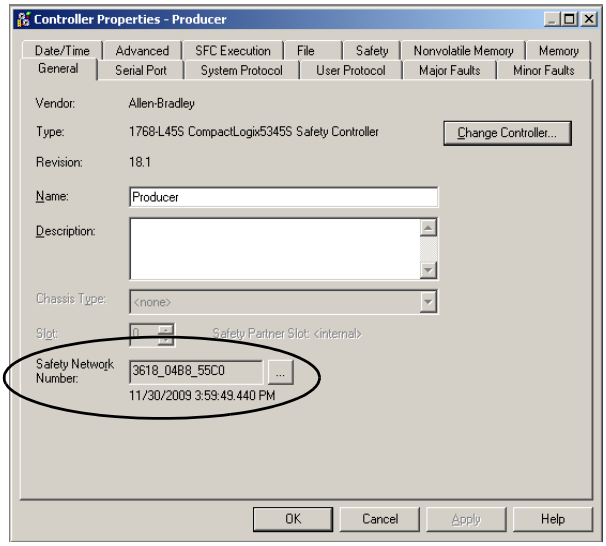

TIP An SNN can be copied and pasted by using the buttons on the Safety Network Number dialog box. Open the respective Safety Network Number dialog boxes by clicking ... to the right of the SNN fields in the properties dialog boxes.

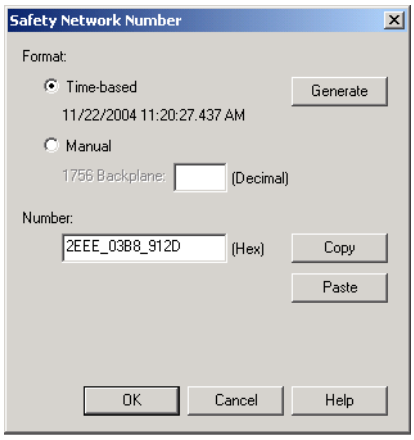

- For produced and consumed safety tags, you must create a user-defined data type. The first member of the tag structure must be a predefined data type called CONNECTION_STATUS.

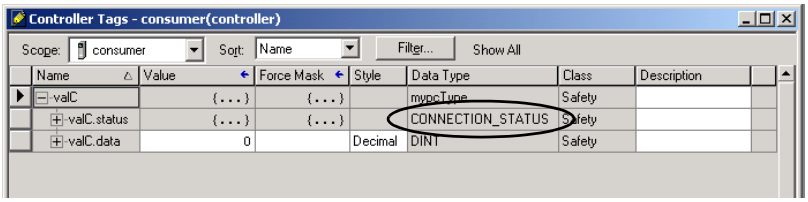

- The requested packet interval (RPI) of the consumed safety tag must match the safety task period of the producing safety project.

Consumer's Project

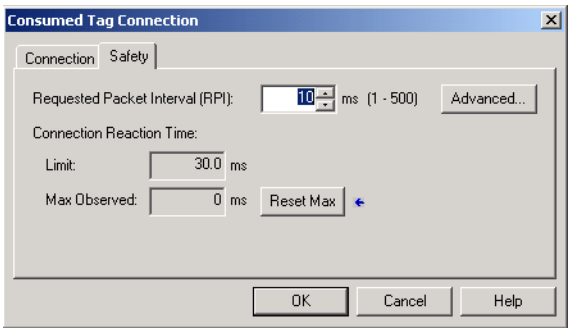

Producer's Project

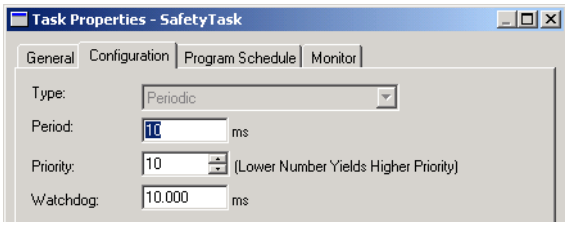

Set the RPI via the Safety tab on the Consumed Tag Connection dialog box. To open this dialog box, right-click the consumed tag and choose Edit. To view or edit the safety task period, right-click the producing safety task and choose Properties. Then, click the Configuration tab.

Table 6 - Additional Resources

Resource	Description
Chapter 5, Develop Safety Applications	Contains more information on the safety task period and on configuring produced/consumed tags
Safety Connections on page 96	Provides more information on the CONNECTION_STATUS data type
Logix5000 Controllers Produced and Consumed Tags Programming Manual, publication 1756-PM011	Contains more information on producing and consuming tags and on creating user-defined data types
Logix5000 Controllers I/O and Tag Data Programming Manual, publication 1756-PM004	Contains more information on creating user-defined data types

Notes:

Communicate Over Networks

Introduction

Topic	Page
The Safety Network	31
EtherNet/IP Communication	37
ControlNet Communication	41
Standard DeviceNet Communication	44
Serial Communication	45

The Safety Network

The CIP Safety protocol is an end-node to end-node safety protocol that allows routing of CIP Safety messages to and from CIP Safety devices through bridges, switches, and routers.

To maintain high integrity when routing through standard bridges, switches, or routers, each end node within a routable CIP Safety Control System must have a unique reference. This unique reference is a combination of a safety network number (SNN) and the node address of the network device.

Managing the Safety Network Number (SNN)

The SNN assigned to safety devices on a network segment must be unique. You must be sure that a unique SNN is assigned to each CIP Safety network that contains safety devices.

TIP Multiple safety network numbers can be assigned to a CIP Safety subnet or a ControlBus chassis that contains more than one safety device. **However, for simplicity, we recommend that each CIP Safety subnet have one, and only one, unique SNN.**

The SNN can be software-assigned (time-based) or user-assigned (manual). These two formats of the SNN are described in the following sections.

Time-based Safety Network Number

If the time-based format is selected, the SNN value that is generated represents the date and time at which the number was generated, according to the personal computer running the configuration software.

Figure 6 - Time-based Format

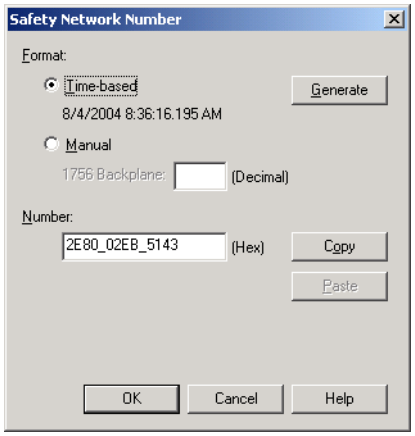

Manual Safety Network Number

If the manual format is selected, the SNN represents entered values from 1…9999 decimal.

Figure 7 - Manual Entry

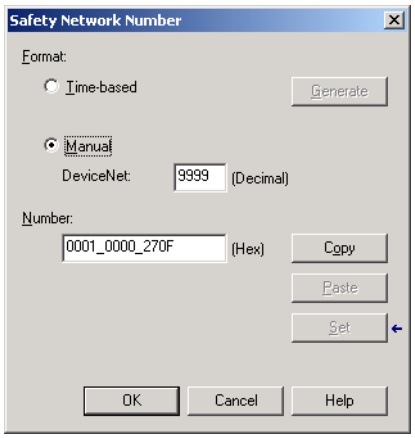

Assigning the Safety Network Number (SNN)

You can allow RSLogix 5000 software to automatically assign an SNN, or you can assign the SNN manually.

Automatic Assignment

When a new controller or module is created, a time-based SNN is automatically assigned via the configuration software. Subsequent new safety-module additions to the same CIP Safety network are assigned the same SNN defined within the lowest address on that CIP Safety network.

Manual Assignment

The manual option is intended for routable CIP Safety systems where the number of network subnets and interconnecting networks is small, and where users might like to manage and assign the SNN in a logical manner pertaining to their specific application.

See Changing the Safety Network Number (SNN) on page 33.

IMPORTANT	If you assign an SNN manually, make sure that system expansion does not result in duplication of SNN and node address combinations.

Automatic Versus Manual

For typical users, the automatic assignment of an SNN is sufficient. However, manual manipulation of the SNN is required if:

- safety consumed tags are used.
- the project consumes safety input data from a module whose configuration is owned by some other device.
- a safety project is copied to another hardware installation within the same routable CIP Safety system.

Changing the Safety Network Number (SNN)

Before changing the SNN you must:

- unlock the project, if it is safety-locked.
  See Safety-lock the Controller on page 76.
- delete the safety task signature, if one exists.
  See Delete the Safety Task Signature on page 79.

Change the Safety Network Number (SNN) of the Controller

1. In the Controller Organizer, right-click the controller and choose Properties.
2. On the General tab of the Controller Properties dialog box, click ... to the right of the safety network number to open the Safety Network Number dialog box.

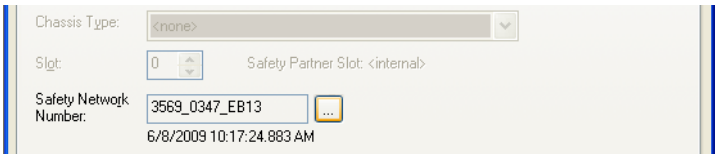

3. Click Time-based and then Generate.

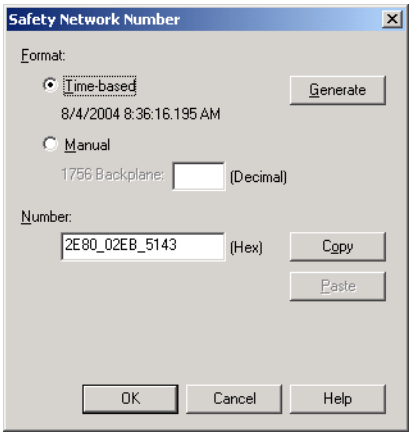

4. Click OK.

Change the Safety Network Number (SNN) of Safety I/O Modules on the CIP Safety Network

This example uses an EtherNet/IP network.

1. Find the first EtherNet/IP communication module in the I/O Configuration tree.
2. Expand the safety I/O modules available through the EtherNet/IP communication module.

3. Double-click the first safety I/O module to view the General tab.

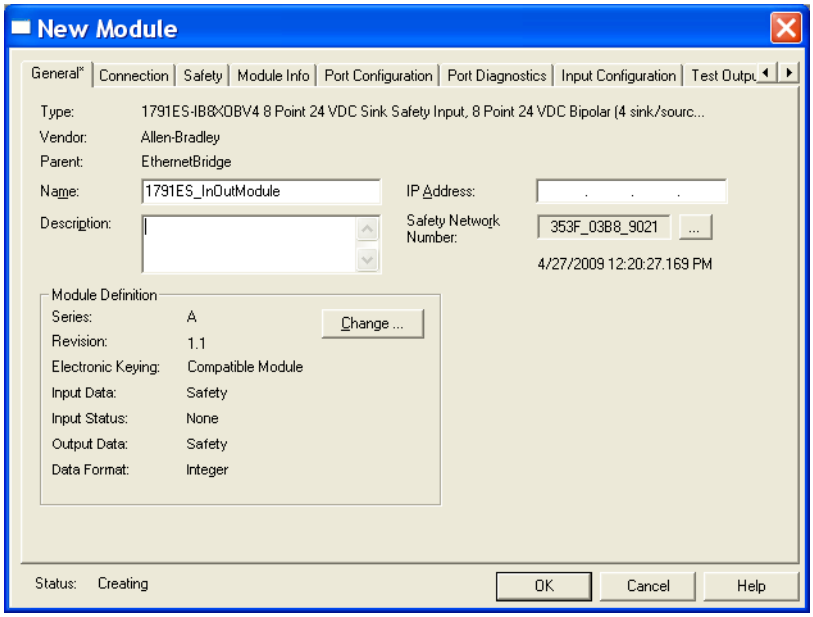

4. Click ... to the right of the safety network number to open the Safety Network Number dialog box.
5. Choose Time-based and click Generate to generate a new SNN for that EtherNet/IP network.
6. Click OK.
7. Click Copy to copy the new SNN to the Windows Clipboard.
8. Open the General Tab of the Module Properties dialog box of the next safety I/O module under that EtherNet/IP module.
9. Click ... to the right of the safety network number to open the Safety Network Number dialog box.
10. Choose Time-based and click Paste to paste that EtherNet/IP network's SNN into that device.
11. Click OK.
12. Repeat steps 8...10 for the remaining safety I/O modules under that EtherNet/IP communication module.
13. Repeat steps 2...10 for any remaining network communication modules under the I/O Configuration tree.

Copy and Paste a Safety Network Number (SNN)

If the module's configuration is owned by another controller, you may need to copy and paste the SNN from the configuration owner into the module in your I/O configuration tree.

1. In the software configuration tool of the module's configuration owner, open the Safety Network Number dialog box for the module.

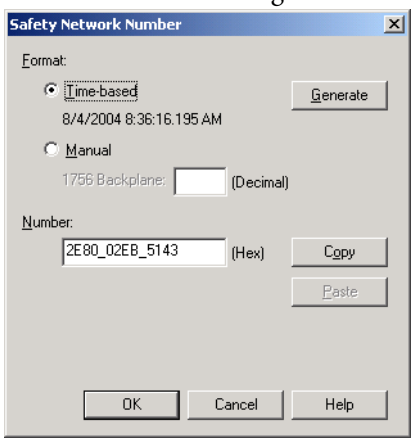

2. Click Copy.
3. Click the General tab on the Module Properties dialog box of the I/O module in the I/O Configuration tree of the consuming controller project. This consuming controller is not the configuration owner.
4. Click ... to the right of the safety network number to open the Safety Network Number dialog box.
5. Click Paste.
6. Click OK.

EtherNet/IP Communication

For standard EtherNet/IP communication, choose a 1768-ENBT or 1768-EWEB communication module, series A, revision 3 or later.

For safety communication, including Safety I/O module control, choose a 1768-ENBT module, series A, revision 3 or later.

The 1768-ENBT EtherNet/IP communication modules:

- support messaging, produced/consumed tags, HMI, and distributed I/O.
- support CIP Safety communication.
- encapsulate messages within standard TCP/UDP/IP protocol.
- share a common application layer with ControlNet and DeviceNet networks.
- interface via RJ45, category 5, unshielded, twisted-pair cable.
- support half/full duplex 10 Mbps or 100 Mbps operation.
- support standard switches.
- require no network scheduling.
- require no routing tables.

These software products are available for EtherNet/IP networks.

Table 7 - Software for EtherNet/IP Modules

Software	Purpose	Required
RSLogix 5000 programming software	This software is required to configure the controller project and define EtherNet/IP communication.	Yes
BOOTP/DHCP utility	This utility comes with RSLogix 5000 software. You can use this utility to assign IP addresses to devices on an EtherNet/IP network.	No
RSNetWorx for EtherNet/IP software	You can use this software to configure EtherNet/IP devices by IP addresses and/or host names	No
RSLinx software	You can use this software to configure devices, establish communication between devices, and provide diagnostics.	Yes

Producing and Consuming Data via an EtherNet/IP Network

The controller supports the ability to produce (send) and consume (receive) tags over an EtherNet/IP network. Produced and consumed tags each require connections. The total number of tags that can be produced or consumed is limited by the number of available connections.

Connections Over the EtherNet/IP Network

You indirectly determine the number of connections the safety controller uses by configuring the controller to communicate with other devices in the system. Connections are allocations of resources that provide more reliable communication between devices compared to unconnected messages (message instructions).

EtherNet/IP connections are unscheduled. An unscheduled connection is triggered by the requested packet interval (RPI) for I/O control or the program (such as a MSG instruction). Unscheduled messaging lets you send and receive data when needed.

The EtherNet/IP communication modules support 64 Common Industrial Protocol (CIP) connections over an EtherNet/IP network.

EtherNet/IP Communication Example

In this example:

- the controllers can produce and consume standard or safety tags between each other.
- the controllers can initiate MSG instructions that send/receive standard data or configure devices.[1]
- the EtherNet/IP communication module is used as a bridge, letting the safety controller produce and consume standard and safety data.
- the personal computer can upload/download projects to the controllers.
- the personal computer can configure devices on the EtherNet/IP network.

(1) Compact GuardLogix controllers do not support MSG instructions for safety data.

Figure 8 - EtherNet/IP Communication Example

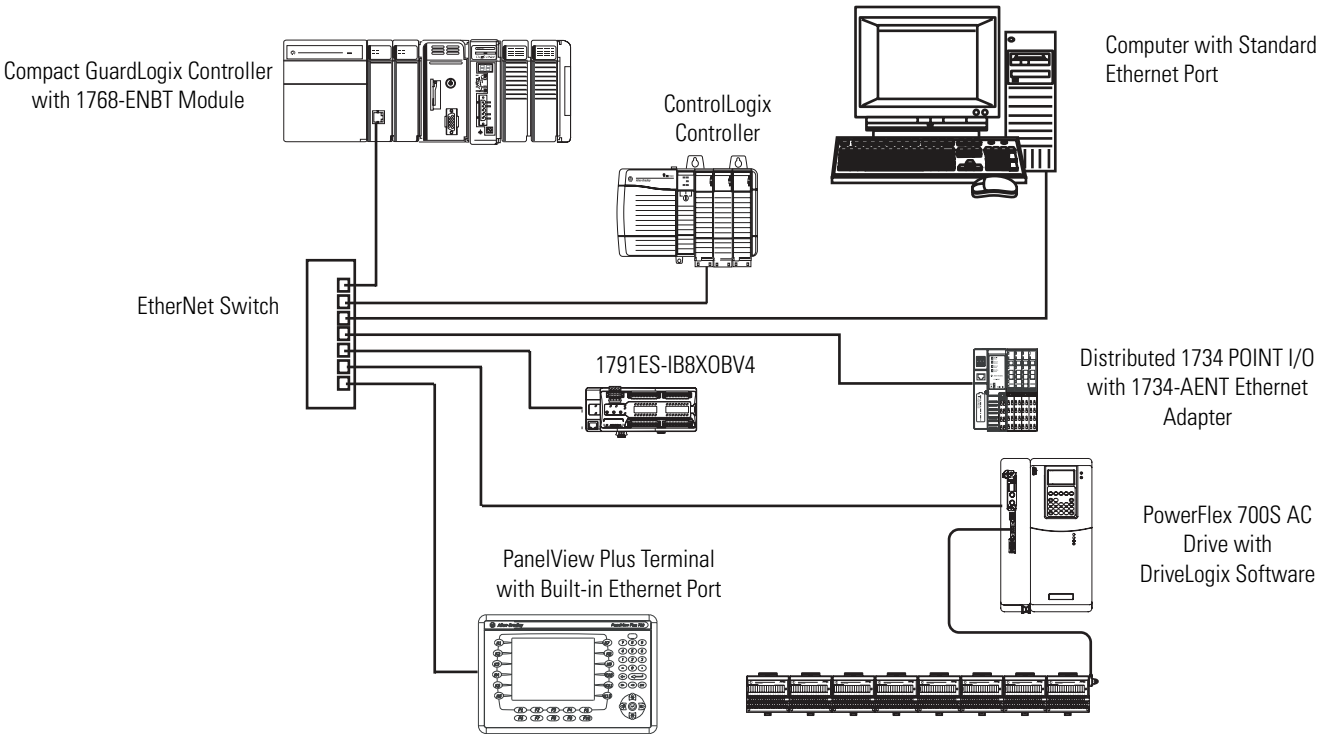

EtherNet/IP Connections for CIP Safety I/O

CIP Safety I/O modules on EtherNet/IP networks are added to the project under the EtherNet/IP communication module as described in Chapter 4, Add, Configure, Monitor, and Replace CIP Safety I/O. When you add a CIP Safety I/O module, RSLogix 5000 software automatically creates controller-scoped safety data tags for that module.

Figure 9 - Adding EtherNet/IP Modules to the Project

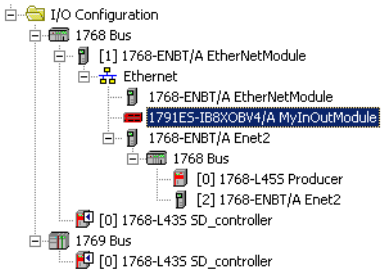

Standard EtherNet/IP Connections

To use a standard EtherNet/IP module with the safety controller, add the module to the safety controller project and download the project to the Compact GuardLogix controller.

1. To configure the module, define the IP address, subnet mask, and gateway.

EtherNet/IP Parameter	Description
IP Address	The IP address uniquely identifies the module. The IP address is in the form *xxx.xxx.xxx.xxx.* where each xxx is a number between 0 and 255. However, there are some values that you cannot use as the first octet in the address: • 000.*xxx.xxx.xxx* • 127.*xxx.xxx.xxx* • 223…255.*xxx.xxx.xxx*
Subnet Mask	Subnet addressing is an extension of the IP address scheme that allows a site to use one network ID for multiple physical networks. Routing outside of the site continues by dividing the IP address into a net ID and a host ID via the class. Inside a site, the subnet mask is used to redivide the IP address into a custom network ID portion and host ID portion. This field is set to 0.0.0.0 by default. If you change the subnet mask of an already-configured module, you must cycle power for the change to take effect.
Gateway	A gateway connects individual physical networks into a system of networks. When a node needs to communicate with a node on another network, a gateway transfers the data between the two networks. This field is set to 0.0.0.0 by default.

2. After you physically install an EtherNet/IP module and set its IP address, add the module to the Controller Organizer in your Compact GuardLogix controller project.
   Use RSLogix 5000 software to download the project.

Table 8 - Additional Resources for EtherNet/IP Communication

Resource	Description
Chapter 4, Add, Configure, Monitor, and Replace CIP Safety I/O	Provides information on using CIP Safety I/O in a safety project
Chapter 5, Develop Safety Applications	Provides information on configuring produced and consumed safety tags
EtherNet/IP Modules in Logix5000 Control Systems User Manual, publication ENET-UM001	Contains guidelines and details on interlocking and data transfer between controllers on the EtherNet/IP network by using the EtherNet/IP modules
EtherNet/IP Performance Application Solution, publication ENET-AP001	Explains how to plan an EtherNet/IP network and improve overall network performance
Logix5000 Controllers Produced and Consumed Tags Programming Manual, publication 1756-PM011	Contains more information on how to produce and consume tags between controllers
Logix5000 Controllers Design Considerations Reference Manual, publication 1756-RM094	Provides guidelines on optimizing a control application on an EtherNet/IP network

ControlNet Communication

For ControlNet communication, choose a 1768-CNB module, series A, revision 3 or later.

These software products are available for ControlNet networks.

Table 9 - Software for ControlNet Modules

Software	Purpose	Required
RSLogix 5000 programming software	This software is required to configure the GuardLogix project and define ControlNet communication.	Yes
RSNetWorx for ControlNet software	This software is required to configure the ControlNet network, define the network update time (NUT), and schedule the ControlNet network.	Yes
RSLinx software	You can use this software to configure devices, establish communication between devices, and provide diagnostics.	Yes

The ControlNet communication modules:

- support messaging, produced/consumed safety and standard tags, and distributed I/O.
- support the use of coax and fiber repeaters for isolation and increased distance.

Producing and Consuming Data via a ControlNet Network

The Compact GuardLogix controller supports the ability to produce (send) and consume (receive) tags over ControlNet networks. The total number of tags that can be produced or consumed is limited by the number of available connections in the Compact GuardLogix controller.

Connections Over the ControlNet Network

The number of connections the controller uses is determined by how you configure the controller to communicate with other devices in the system. Connections are allocations of resources that provide more reliable communication between devices compared to unconnected messages.

ControlNet connections can be scheduled or unscheduled.

Table 10 - ControlNet Connections

Connection Type	Description
Scheduled (unique to the ControlNet network)	A scheduled connection is unique to ControlNet communication. A scheduled connection lets you send and receive data repeatedly at a predetermined interval, which is the requested packet interval (RPI). For example, a connection to an I/O module is a scheduled connection because you repeatedly receive data from the module at a specified interval. Other scheduled connections include connections to: • communication devices. • produced/consumed tags. On a ControlNet network, you must use RSNetWorx for ControlNet software to enable scheduled connections and establish a network update time (NUT). Scheduling a connection reserves network bandwidth to specifically handle the connection.
Unscheduled	An unscheduled connection is a message transfer between controllers that is triggered by the requested packet interval (RPI) or the program (such as a MSG instruction). Unscheduled messaging lets you send and receive data when needed. Unscheduled connections use the remainder of network bandwidth after scheduled connections are allocated. Safety produced/consumed connections are unscheduled.

The 1768-CNB communication modules support 64 CIP connections over a ControlNet network.

ControlNet Communication Example

In this example:

- Compact GuardLogix controllers can produce and consume standard or safety tags between each other.
- Compact GuardLogix controllers can initiate MSG instructions that send/receive standard data or configure devices.(1)
- the 1768-CNB module can be used as a bridge, letting the Compact GuardLogix controller produce and consume standard and safety data to and from I/O devices.
- the personal computer can upload/download projects to the controllers.
- the personal computer can configure devices on the ControlNet network, and it can configure the network itself.

(1) Compact GuardLogix controllers do not support MSG instructions for safety data.

Figure 10 - ControlNet Communication Example

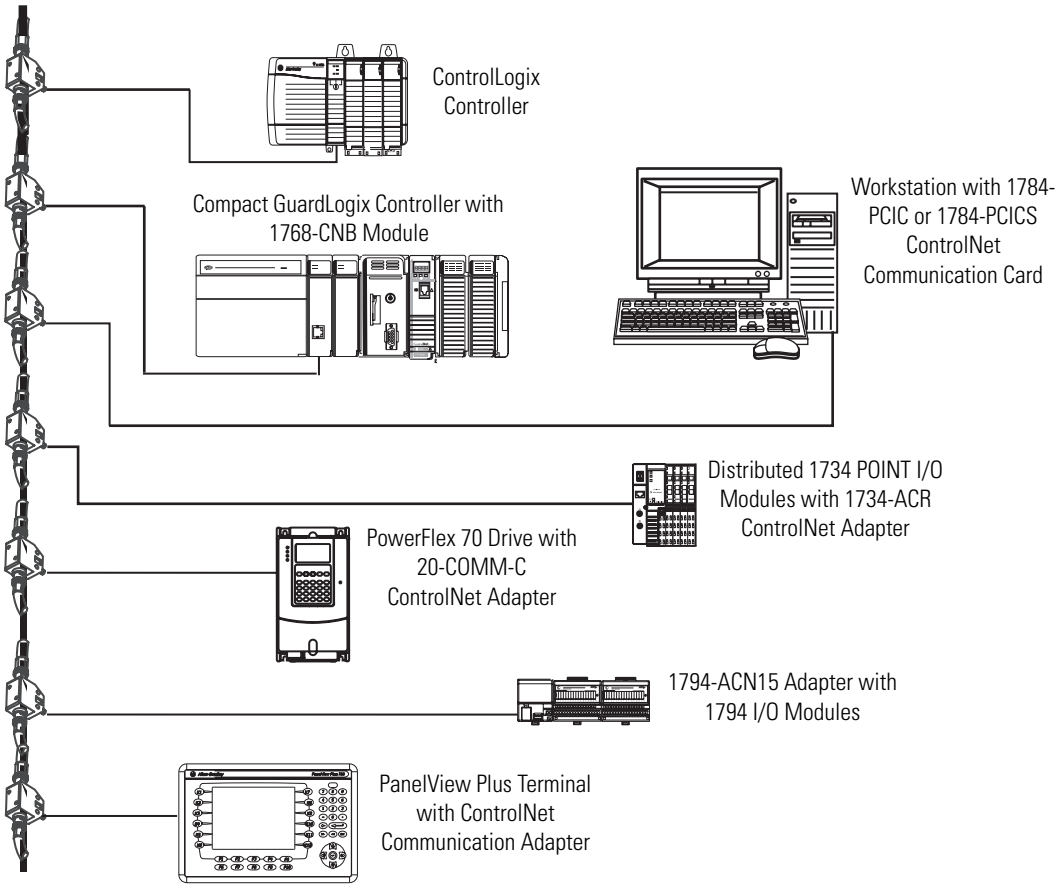

ControlNet Connections for Distributed I/O

To communicate with distributed I/O modules over a ControlNet network, add a 1768-CNB ControlNet bridge, a ControlNet adapter, and I/O modules to the controller's I/O Configuration folder.

Table 11 - Additional Resources for ControlNet Communication

Resource	Description
ControlNet Modules in Logix5000 Control Systems User Manual, publication CNET-UM001	Contains information on how to: • configure a ControlNet communication module. • control I/O over the ControlNet network. • send a message over the ControlNet network. • produce/consume a tag over the ControlNet network. • calculate controller connections over the ControlNet network.
Logix5000 Controllers Design Considerations Reference Manual, publication 1756-RM094	Provides guidelines on optimizing a control application on a ControlNet network.

Standard DeviceNet Communication

The DeviceNet network uses the Common Industrial Protocol (CIP) to provide the control, configuration, and data collection capabilities for industrial devices.

A DeviceNet network lets you connect devices directly to plant-floor controllers without having to hardwire each device to an I/O module.

Table 12 - DeviceNet Interfaces

Application	Required Interface
• Communicates with other DeviceNet devices • Uses the controller as a master on a DeviceNet network	1769-SDN DeviceNet scanner
• Accesses remote Compact I/O modules over a DeviceNet network • Sends remote I/O data for as many as 30 modules back to a scanner or controller	1769-ADN DeviceNet adapter(1)

(1) This table specifically describes using the 1769-ADN adapter to access remote Compact I/O modules over the DeviceNet network. However, CompactLogix controllers can access other Allen-Bradley remote I/O modules over the DeviceNet network. In those cases, you must select the appropriate interface. For example, if accessing remote POINT I/O modules, you must select the 1734-ADN adapter.

In addition to communication hardware for DeviceNet networks, these software products are available.

Table 13 - Required Software for DeviceNet Communication

Software	Functions	Requirement
RSLogix 5000	• Configure CompactLogix projects. • Define DeviceNet communication.	Yes
RSNetWorx for DeviceNet	• Configure DeviceNet devices. • Define the scan list for those devices.	
RSLinx	• Configure communication devices. • Provide diagnostics. • Establish communication between devices.	

The DeviceNet communication modules:

- support messaging to a device, not controller to controller.
- offer diagnostics for improved data collection and fault detection.
- require less wiring than traditional, hardwired systems.

Figure 11 - Standard DeviceNet Communication Example

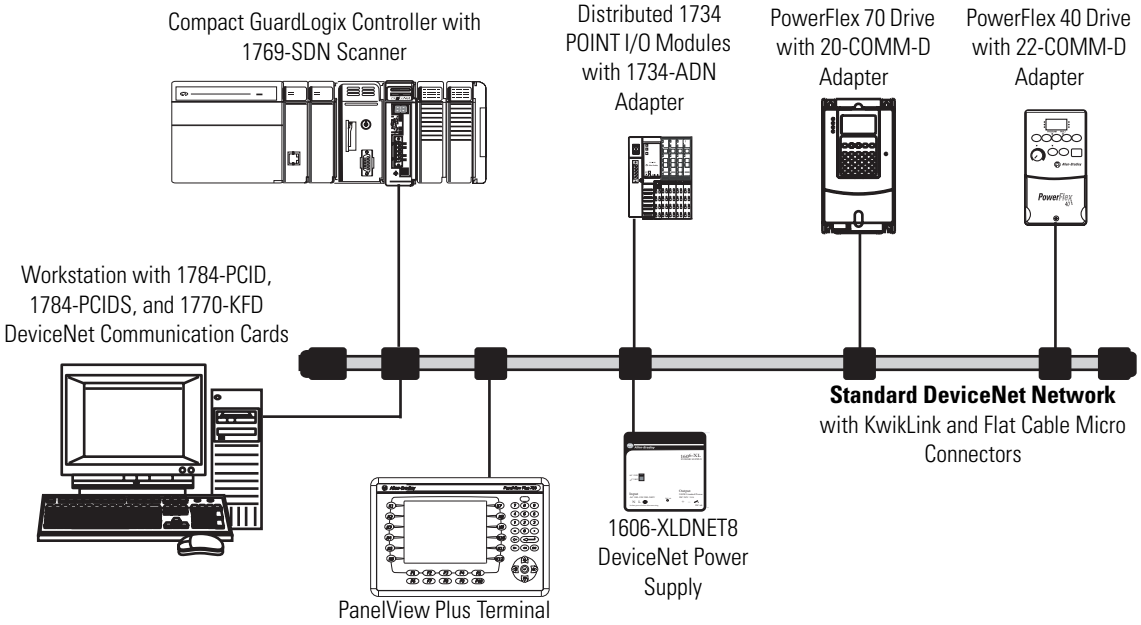

Table 14 - Additional Resources

Resource	Description
Logix5000 Controllers Design Considerations Reference Manual, publication 1756-RM094	Provides information pertinent to the design of Logix5000 systems.
DeviceNet Modules in Logix5000 Control Systems User Manual, publication DNET-UM004	Explains how to use DeviceNet modules with Logix5000 controllers.
Logix5000 Controllers Common Procedures Programming Manual, publication 1756-PM001	Provides guidelines for the development of programs for Logix5000 controllers.

Serial Communication

To operate the Compact GuardLogix controller on a serial network, you need:

- a workstation with a serial port.
- RSLinx software to configure the serial communication driver.
- RSLogix 5000 software to configure the serial port of the controller.

For the controller to communicate to a workstation or other device over the serial network, you must:

1. Configure the serial communication driver for the workstation.
2. Configure the serial port of the controller.

IMPORTANT Limit the length of serial (RS-232) cables to 15.2 m (50 ft).

Table 15 - DF1 Modes for Logix5000 Controllers

Mode	Functions
DF1 Point-to-Point	Communication between a controller and one other DF1-protocol-compatible device. This is the Default System mode. Default parameters are: • Communication Rate: 19,200 bps. • Data Bits: 8. • Parity: None. • Stop Bits: 1. • Control Line: No Handshake. • RTS send Delay: 0. • RTS Off Delay: 0. This mode is typically used to program a controller through its serial port.
DF1 Master	• Control of polling and message transmission between the master and slave nodes. • The master/slave network includes one controller configured as the master node and up to 254 slave nodes. Link slave nodes using modems or line drivers. • A master/slave network can have node numbers from 0...254. Each node must have a unique node address. Also, for your link to be a network, it must consist of one master and one slave station.
DF1 Slave	• A controller to operate as a slave station in a master/slave serial communication network. • When there are multiple slave stations on the network, link slave stations by using modems or line drivers to the master. When you have a single slave station on the network, you do not need a modem to connect the slave station to the master. You can configure the control parameters for no handshaking. You can connect 2...255 nodes to a single link. In DF1 Slave mode, a controller uses DF1 half-duplex protocol. • One node is designated as the master and controls who has access to the link. All of the other nodes are slave stations and must wait for permission from the master before transmitting.
DF1 Radio Modem	• Compatible with SLC 500 and MicroLogix 1500 controllers. • This mode supports Master and Slave, and Store and Forward modes.
User	• Communication with ASCII devices. • This requires your program to use ASCII instructions to read and write data from and to an ASCII device.
DH-485	• Communication with other DH-485 devices. • This multi-master, token-passing network permits programming and peer-to-peer messaging.

Add, Configure, Monitor, and Replace CIP Safety I/O

Introduction

Topic	Page
Adding CIP Safety I/O Modules	47
Configure CIP Safety I/O Modules via RSLogix 5000 Software	48
Setting the Safety Network Number (SNN)	49
Setting the Connection Reaction Time Limit	49
Understanding the Configuration Signature	53
Reset Safety I/O Module Ownership	54
Addressing Safety I/O Data	54
Monitor Safety I/O Module Status	56
Replacing a CIP Safety I/O Module	57

For more information on installation, configuration, and operation of CIP Safety I/O modules, refer to these publications:

- Guard I/O EtherNet/IP Safety Modules User Manual, publication 1791ES-UM001.
- POINT Guard I/O Safety Modules Installation and User Manual, publication 1734-UM013.
- RSLogix 5000 software online help

Adding CIP Safety I/O Modules

When you add a module to the system, you must define a configuration for the module, including the following:

- IP address for EtherNet/IP networks

  To set the IP address, you can adjust the rotary switches on the module, use DHCP software, available from Rockwell Automation, or retrieve the default address from nonvolatile memory.

- Safety network number (SNN)

  See page 49 for information on setting the SNN.

- Configuration signature

  See page 53 for information on when the configuration signature is set automatically and when you need to set it.

- Reaction time limit

  See page 49 for information on setting the reaction time limit.

- Safety input, output, and test parameters

You can configure CIP Safety I/O modules via the Compact GuardLogix controller by using RSLogix 5000 software.

TIP Safety I/O modules support standard and safety data. Module configuration defines what data is available.

Configure CIP Safety I/O Modules via RSLogix 5000 Software

Add the CIP Safety I/O module to the communication module under the I/O Configuration folder of the RSLogix 5000 project. Use a 1768-ENBT module, revision 3 or later, for EtherNet/IP modules.

TIP You cannot add or delete a CIP Safety I/O module while online.

1. Right-click the network and choose New Module.
2. Expand the Safety category and choose a CIP Safety I/O module.
3. Specify the module properties.

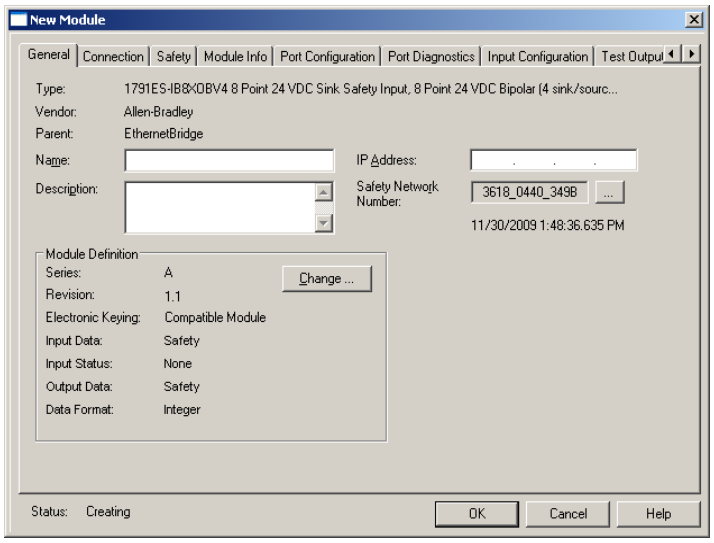

   a. Modify the Module Definition settings, if required, by clicking Change.
   b. Type a name for the new module.
   c. Enter the IP address of the module on its connecting network.
   d. Modify the safety network number (SNN), if required, by clicking the ... button.

   See page 49 for details.

e. Set module configuration parameters by using the Input Configuration, Test Output, and Output Configuration tabs.

   Refer to RSLogix 5000 online help for more information on CIP Safety I/O module configuration.

f. Set the Connection Reaction Time Limit by using the Safety tab.

   See page 49 for details.

Setting the Safety Network Number (SNN)

The assignment of a time-based SNN is automatic when adding new Safety I/O modules. Subsequent safety-module additions to the same network are assigned the same SNN defined within the lowest address on that CIP Safety network.

For most applications, the automatic, time-based SNN is sufficient. However, there are cases in which manipulation of an SNN is required.

See Assigning the Safety Network Number (SNN) on page 33.

Setting the Connection Reaction Time Limit

The Connection Reaction Time Limit is the maximum age of safety packets on the associated connection. If the age of the data used by the consuming device exceeds the Connection Reaction Time Limit, a connection fault occurs. The Connection Reaction Time Limit is determined by the following equations:

Input Connection Reaction Time Limit =
Input RPI x [Timeout Multiplier + Network Delay Multiplier]

Output Connection Reaction Time Limit =
Safety Task Period x [Timeout Multiplier + Network Delay Multiplier - 1]

The Connection Reaction Time Limit is shown on the Safety tab of the Module Properties dialog box.

Figure 12 - Connection Reaction Time Limit

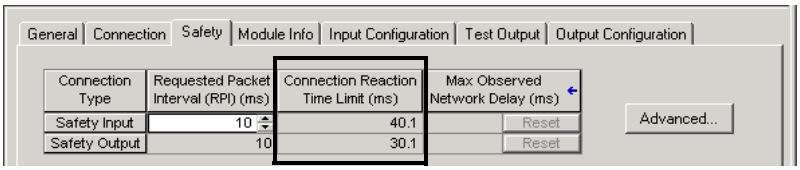

Specify the Requested Packet Interval (RPI)

The RPI specifies the period at which data updates over a connection. For example, an input module produces data at the RPI that you assign.

For safety input connections, you can set the RPI on the Safety tab of the Module Properties dialog box. The RPI is entered in 1 ms increments, with a range of 1…100 ms. The default is 10 ms.

The Connection Reaction Time Limit is adjusted immediately when the RPI is changed via RSLogix 5000 software.

Figure 13 - Requested Packet Interval

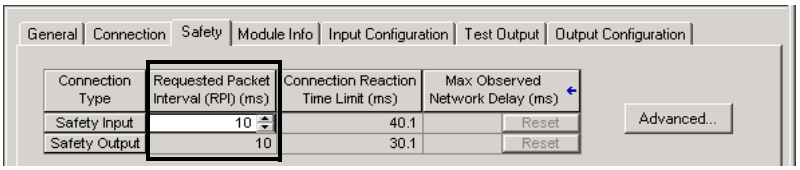

For safety output connections, the RPI is fixed at the safety task period. If the corresponding Connection Time Reaction Limit is not satisfactory, you can adjust the safety task period via the Safety Task Properties dialog box.

See Safety Task Period Specification on page 62 for more information on the safety task period.

For typical applications, the default RPI is usually sufficient. For more complex requirements, use the Advanced button to modify the Connection Reaction Time Limit parameters, as described on page 51.

View the Maximum Observed Network Delay

When the Compact GuardLogix controller receives a safety packet, the software records the maximum observed network delay. For safety inputs, the Maximum Observed Network Delay displays the round-trip delay from the input module to the controller and the acknowledge back to the input module. For safety outputs, it displays the round-trip delay from the controller to the output module and the acknowledge back to the controller. The Maximum Observed Network Delay is shown on the Safety tab of the Module Properties dialog box. When online, you can reset the Maximum Observed Network Delay by clicking Reset.

Figure 14 - Resetting the Max. Observed Network Delay

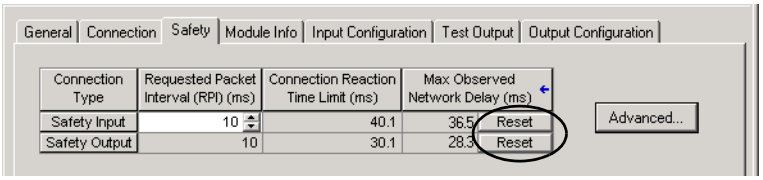

IMPORTANT The actual Maximum Network Delay time from the producer to the consumer is less than the value displayed in the Maximum Network Delay field on the Safety tab. In general, the actual maximum message delay is approximately one-half the Maximum Network Delay value that is displayed.

Setting the Advanced Connection Reaction Time Limit Parameters

Figure 15 - Advanced Configuration

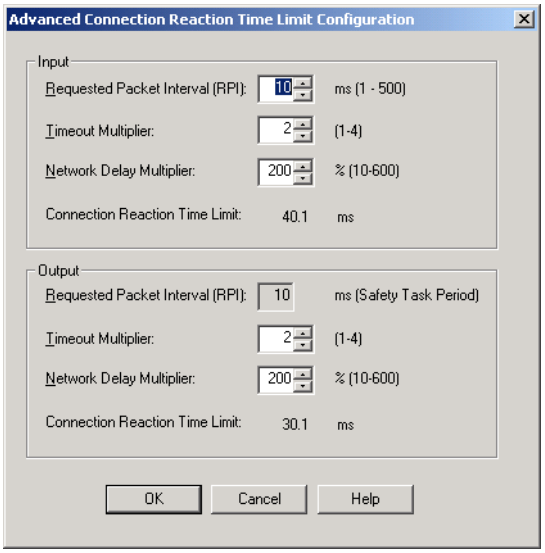

Timeout Multiplier

The Timeout Multiplier determines the number of RPIs to wait for a packet before declaring a connection timeout. This translates into the number of messages that may be lost before a connection error is declared.

For example, a Timeout Multiplier of 1 indicates that messages must be received during every RPI interval. A Timeout Multiplier of 2 indicates that 1 message may be lost as long as at least 1 message is received in 2 times the RPI (2 x RPI).

Network Delay Multiplier

The Network Delay Multiplier defines the message transport time that is enforced by the CIP Safety protocol. The Network Delay Multiplier specifies the round-trip delay from the producer to the consumer and the acknowledge back to the producer. You can use the Network Delay Multiplier to reduce or increase the Connection Reaction Time Limit in cases where the enforced message transport time is significantly less or more than the RPI. For example, adjusting the Network Delay Multiplier may be helpful when the RPI of an output connection is the same as a lengthy safety task period.

For cases where the input RPI or output RPI are relatively slow or fast as compared to the enforced message delay time, the Network Delay Multiplier can be approximated by using one of the two methods.

Method 1: Use the ratio between the input RPI and the safety task period. Use this method only under all of the following conditions:

- If the path or delay is approximately equal to the output path or delay.
- The input RPI has been configured so that the actual input message transport time is less than the input RPI.
- The safety task period is slow relative to the Input RPI.

  Under these conditions, the Output Network Delay Multiplier can be approximated as follows:

  Input Network Delay Multiplier x [Input RPI ÷ Safety Task Period]

EXAMPLE	**Calculate the Approximate Output Network Delay Multiplier**
	If: Input RPI = 10 ms Input Network Delay Multiplier = 200% Safety Task Period = 20 ms Then, the Output Network Delay Multiplier equals: 200% x [10 ÷ 20] = 100%

Method 2: Use the Maximum Observed Network Delay. If the system is run for an extended period of time through its worst-case loading conditions, the Network Delay Multiplier can be set from the Maximum Observed Network Delay. This method can be used on an input or output connection. After the system has been run for an extended period of time through its worst-case loading conditions, record the Maximum Observed Network Delay.

The Network Delay Multiplier can be approximated by the following equation:

[Maximum Observed Network Delay + Margin_Factor] ÷ RPI

EXAMPLE **Calculate the Network Delay Multiplier from Maximum Observed Network Delay**

If:

RPI = 50 ms
Maximum Observed Network Delay = 20 ms
Margin_Factor = 10

Then, the Network Delay Multiplier equals:

[20 + 10] ÷ 50 = 60%

Table 16 - Additional Resources

Resource	Description
GuardLogix Controllers Systems Safety Reference Manual, publication 1756-RM093	Provides information on calculating reaction times.
Guard I/O EtherNet/IP Safety Modules User Manual, publication 1791ES-UM001	

Understanding the Configuration Signature

Each safety device has a unique configuration signature, which defines the module configuration. The configuration signature is composed of an ID number, date, and time, and is used to verify a module's configuration.

Configuration via RSLogix 5000 Software

When the I/O module is configured by using RSLogix 5000 software, the configuration signature is generated automatically. You can view and copy the configuration signature via the Safety tab on the Module Properties dialog box.

Figure 16 - View and Copy the Configuration Signature

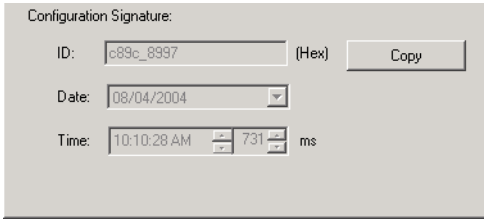

Different Configuration Owner (Listen Only Connection)

When the I/O module configuration is owned by another controller, you need to copy the module configuration signature from its owner's project and paste it into the Safety tab of the Module Properties dialog box.

TIP If the module is configured for inputs only, you can copy and paste the configuration signature. If the module has safety outputs, they are owned by the controller that owns the configuration, and the configuration signature text box is unavailable.

Reset Safety I/O Module Ownership

When RSLogix 5000 software is online, the Safety tab of the Module Properties dialog box displays the current configuration ownership. When the opened project owns the configuration, Local is displayed. When a second device owns the configuration, Remote is displayed, along with the safety network number (SNN), and node address or slot number of the configuration owner. Communication error is displayed if the module read fails.

When online, you can reset the module to its out-of-box configuration by clicking Reset Ownership.

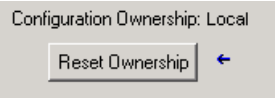

TIP You cannot reset ownership when there are pending edits to the module properties, when a safety task signature exists, or when safety-locked.

Addressing Safety I/O Data

When you add a module to the I/O configuration folder, RSLogix 5000 software automatically creates controller-scoped tags for the module.

I/O information is presented as a set of tags. Each tag uses a structure of data, depending on the type and features of the I/O module. The name of a tag is based on the module's name in the system.

A CIP Safety I/O device address follows this format:

Modulename:Type.Member

Table 17 - CIP Safety I/O Module Address Format

Where	Is	
Modulename	The name of the CIP Safety I/O module	
Type	Type of data	
	Input: I	
	Output: O	
Member	Specific data from the I/O module	
	Input-only Module:	Modulename:I.RunMode Modulename:I.ConnectionFaulted Modulename:I.Input Members
	Output-only Module:	Modulename:I.RunMode Modulename:I.ConnectionFaulted Modulename:O.Output Members
	Combination I/O:	Modulename:I.RunMode Modulename:I.ConnectionFaulted Modulename:I.Input Members Modulename:O.Output Members

Table 18 - Additional Resources

Resource	Description
Chapter 7, Monitor Status and Handle Faults	Contains information on monitoring safety tag data
Logix5000 Controllers I/O and Tag Data Programming Manual, publication 1756-PM004	Provides information on addressing standard I/O modules

Monitor Safety I/O Module Status

You can monitor Safety I/O module status via explicit messaging or via the status indicators on the I/O modules.

The Guard I/O EtherNet/IP Modules User Manual, publication 1791ES-UM001, provides information on explicit messaging and I/O module troubleshooting.

Table 19 - Status Indicator Operation

Indicator	Status	Description EtherNet/IP Modules
Module Status (MS)	Off	No power.
	Green, On	Operating under normal conditions.
	Green, Flashing	Device is idle.
	Red, Flashing	A recoverable fault exists or a firmware update is in progress.
	Red, On	An unrecoverable fault exists.
	Red/Green, Flashing	Self-tests are in progress or the module is not configured properly. See the network status indicator for more information.
Network Status (NS)	Off	Device is not online or may not have power.
	Green, On	Device is online; connections are established.
	Green, Flashing	Device is online; no connections established.
	Red, Flashing	Communication timeout or a firmware update is in progress.
	Red, On	Communication failure. The device has detected an error that has prevented network communication.
	Red/Green, Flashing	Self-test in progress.
Input Points (INx)	Off	Safety input is OFF.
	Yellow, On	Safety input is ON.
	Red, On	An error has occurred in the input circuit.
	Red, Flashing	When dual-channel operation is selected, an error has occurred in the partner input circuit.
Output Points (Ox)	Off	Safety output is OFF.
	Yellow, On	Safety output is ON.
	Red, On	An error has occurred in the output circuit.
	Red, Flashing	When dual-channel operation is selected, an error has occurred in the partner output circuit.
IN PWR	Green, Off	No input power.
	Green, On	Input power voltage is within specification.
	Yellow, On	Input power voltage is out of specification.
OUT PWR	Green, Off	No output power.
	Green, On	Output power voltage is within specification.
	Yellow, On	Output power voltage is out of specification.
Test Output Points (Tx)	Off	The output is OFF.
	Yellow, On	The output is ON.
	Red. On	An error has occurred in the output circuit.

Replacing a CIP Safety I/O Module

To replace a CIP Safety I/O module, you must prepare the new module for installation and determine whether you need to use the Configure Always feature.

Prepare the I/O Module

1. Set the IP address of the replacement module.
2. Be sure that the replacement module is of the correct type and in out-of-box condition.
3. Return the module to the out-of-box condition, if necessary, by clicking Reset Ownership on the Safety tab of the Module Properties dialog box.

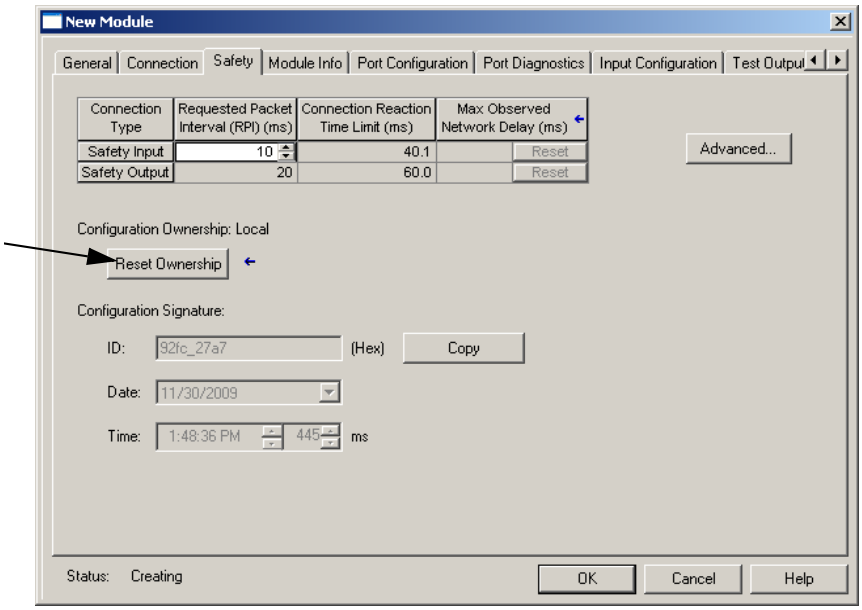

IMPORTANT If a CIP Safety I/O module was previously used, clear the pre-existing configuration prior to installing it on a safety network.

If you are relying on a portion of the CIP Safety system to maintain SIL 3 behavior during module replacement and functional testing, the Configure Always feature may not be used. Follow the Replace an I/O Module with Configure Only Selected procedure on page 58.

If the entire routable CIP Safety Control System is not being relied on to maintain SIL 3/PLe during the replacement and functional testing of a module, the Configure Always feature may be used. Follow the Replace I/O with Configure Always Enabled procedure on page 60.

TIP The Configure Always option is located on the Safety tab of the Controller Properties dialog box. The default setting is Configure Only When No Safety (Task) Signature Exists.

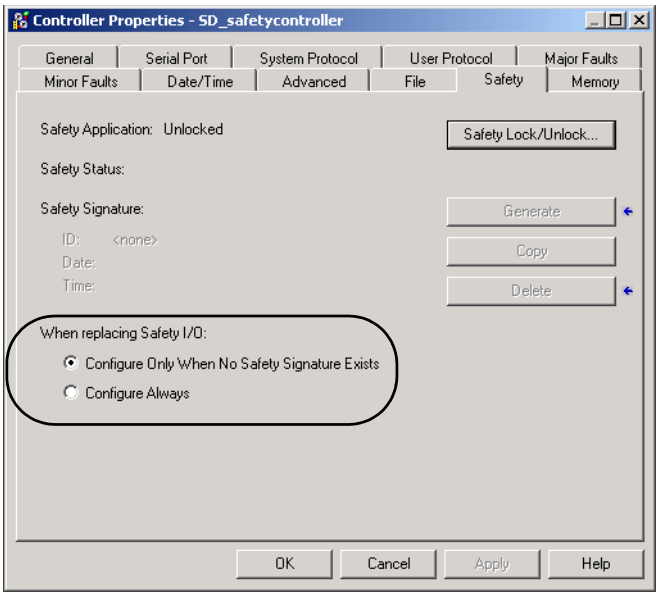

Replace an I/O Module with Configure Only Selected

ATTENTION: If other parts of the CIP Safety Control Systems are being relied upon to maintain SIL 3/PLe behavior during the replacement and functional testing of a module, be sure that the Configure Only selection is used.

If the project has a safety task signature and Configure Only When No Safety (Task) Signature Exists is selected, follow the procedure below to replace a module.

1. Remove the old I/O module and install the new module.
2. Restore power to the system if it was removed during replacement. The controller recognizes the replacement module, and annunciates an out-of-box error.
3. Go online to the controller by using RSLogix 5000 software to set the safety network number (SNN).
4. Click the General tab of the Module Properties dialog box for the replaced module.

5. Click ... to the right of the safety network number to open the Safety Network Number dialog box.

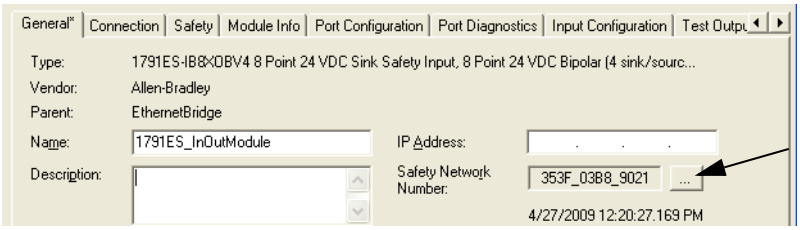

6. Click Set.

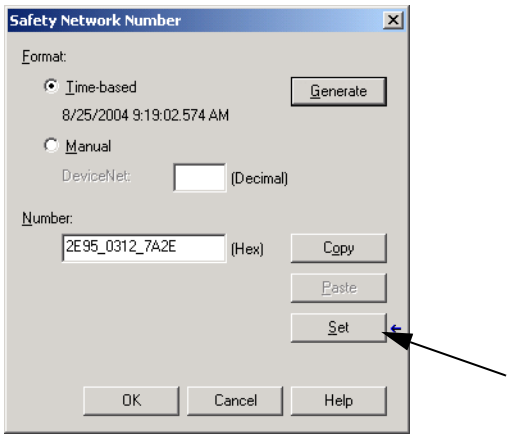

The Set Safety Network Number in Module confirmation dialog box appears.

7. Verify that the Network Status (NS) indicator is alternating red/green on the correct module before clicking Yes on the Set Safety Network Number in Module dialog box to set the SNN and accept the replacement module.

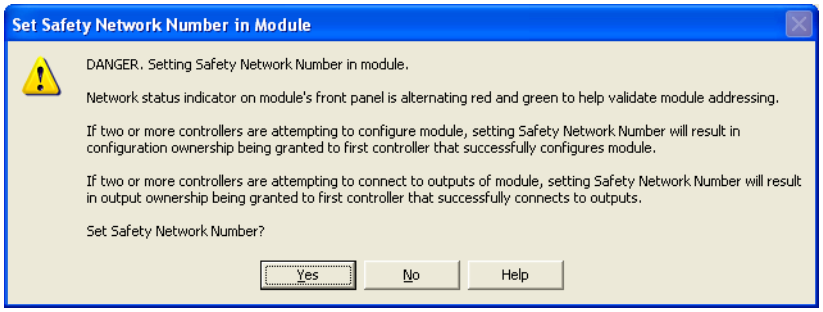

8. Follow your company-prescribed procedures to functionally test the replaced I/O module and system and to authorize the system for use.

Replace I/O with Configure Always Enabled

ATTENTION: Enable the Configure Always feature only if the entire CIP Safety Control System is not being relied on to maintain SIL 3/PLe behavior during the replacement and functional testing of a module.

Do not place modules that are in the out-of-box condition on a CIP Safety network when the Configure Always feature is enabled, except while following this module replacement procedure.

When the Configure Always feature is enabled in RSLogix 5000 software, the controller automatically checks for and accepts a replacement module that meets all of the following requirements:

- The controller has configuration data for a compatible module at that network address.
- The module is in out-of-box condition.

When a safety task signature exists and the Configure Always feature is enabled, follow the procedure below to replace an I/O module.

1. Remove the old I/O module and install the new module.

   The controller recognizes, accepts, and configures the replacement module.

2. Follow your company-prescribed procedures to functionally test the replaced I/O module and system and to authorize the system for use.

Develop Safety Applications

Introduction

Topic	Page
The Safety Task	62
Safety Programs	64
Safety Routines	64
Safety Tags	64
Produced/Consumed Safety Tags	68
Safety Tag Mapping	74
Safety Application Protection	76
Software Restrictions	79

This chapter explains the components that make up a safety project and provides information on using features that help protect safety application integrity, such as the safety task signature and safety-locking.

For guidelines and requirements for developing and commissioning SIL 3 and PLe safety applications, refer to the GuardLogix Controller Systems Safety Reference Manual, publication 1756-RM093.

The Safety Reference Manual addresses:

- creating a detailed project specification.
- writing, documenting, and testing the application.
- generating the safety task signature to identify and protect the project.
- confirming the project by printing or displaying the uploaded project and manually comparing the configurations, safety data, and safety program logic.
- verifying the project through test cases, simulations, functional verification tests, and an independent safety review, if required.
- locking the safety application.

The Safety Task

When you create a safety controller project, RSLogix 5000 software automatically creates a safety task with a safety program and a main (safety) routine.

Figure 17 - Safety Task in the Controller Organizer

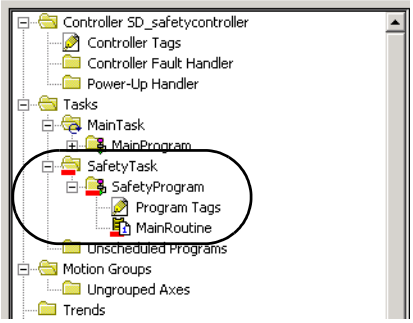

Within the safety task, you can use multiple safety programs, composed of multiple safety routines. The Compact GuardLogix controller supports one safety task. The safety task cannot be deleted.

You cannot schedule standard programs or execute standard routines within the safety task.

Safety Task Period Specification

The safety task is a periodic timed task. You select the task priority and watchdog time via the Task Properties - Safety Task dialog box. Open the dialog box by right-clicking the Safety Task and choosing Properties.

Figure 18 - Configuring the Safety Task Period

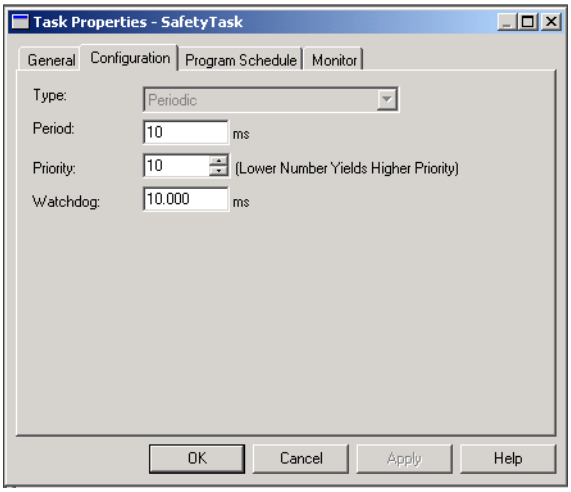

The safety task should be a high priority. You specify the safety task period (in ms) and the safety task watchdog (in ms). The safety task period is the period at which the safety task executes. The safety task watchdog is the maximum time allowed from the start of safety task execution to its completion.

The safety task period is limited to a maximum of 100 ms and cannot be modified online. Be sure that the safety task has enough time to finish logic execution before it is triggered again. If a safety task watchdog timeout occurs, a nonrecoverable safety fault is generated in the safety controller.

The safety task period directly affects system reaction time.

The GuardLogix Controller Systems Safety Reference Manual, publication 1756-RM093, provides detailed information on calculating system reaction time.

Safety Task Execution

The safety task executes in the same manner as a standard periodic task, with the following exceptions:

- The safety task does not begin executing until the primary controller and internal safety partner establish their control partnership. (Standard tasks begin executing as soon as the controller transitions to Run mode.)
- All safety input tags (inputs, consumed, and mapped) are updated and frozen at the beginning of safety task execution.

  See page 74 for information on safety tag mapping.
- Safety output tag (output and produced) values are updated at the conclusion of safety task execution.

Safety Programs

Safety programs have all the attributes of standard programs, except that they can only be scheduled in the safety task and can only contain safety components. Safety programs can only contain safety routines, one of which must be designated as the main routine, and one of which may be designated as the fault routine.

Safety programs cannot contain standard routines or standard tags.

Safety Routines

Safety routines have all the attributes of standard routines, except that they exist only in a safety program. At this time, only ladder diagram is supported for safety routines.

TIP RSLogix 5000 software uses a watermark feature to visually distinguish a safety routine from a standard routine.

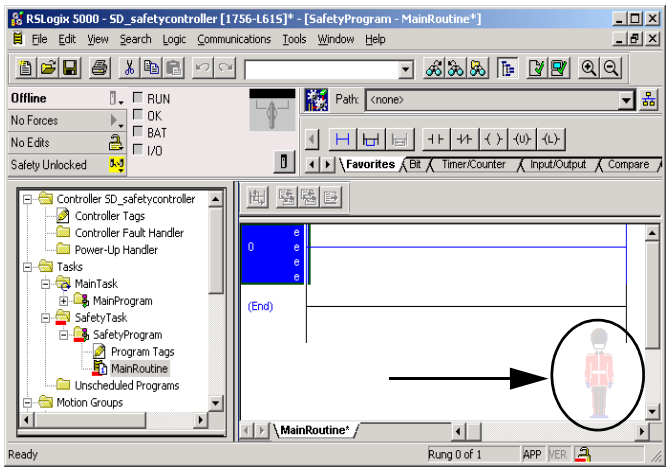

Safety Tags

A tag is an area of a controller's memory where data is stored. Tags are the basic mechanism for allocating memory, referencing data from logic, and monitoring data. Safety tags have all the attributes of standard tags with the addition of mechanisms certified to provide SIL 3 data integrity.

When you create a tag, you assign the following properties:

- Name
- Description (optional)
- Tag type
- Data type
- Scope
- Class
- Style
- External Access

You can also specify if the tag value should be a constant.

To create a safety tag, open the New Tag dialog box by right-clicking Controller Tags or Program Tags and choosing New Tag.

Figure 19 - Creating a New Tag

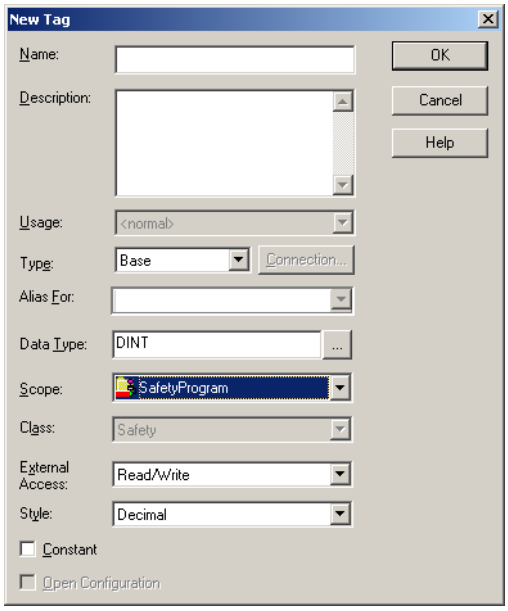

Tag Type

There are four types of tags: base, alias, produced, and consumed.

Table 20 - Four Tag Types

Tag Type	Description
Base	These tags store values for use by logic within the project.
Alias	A tag that references another tag. An alias tag can refer to another alias tag or a base tag. An alias tag can also refer to a component of another tag by referencing a member of a structure, an array element, or a bit within a tag or member. **IMPORTANT:** Aliasing between standard and safety tags is prohibited in safety applications. Instead, standard tags can be mapped to safety tags using safety tag mapping. See Safety Tag Mapping on page 74.
Produced	A tag that a controller makes available for use by other controllers. A maximum of 15 controllers can simultaneously consume (receive) the data. A produced tag sends its data to one or more consuming tags without using logic. Produced tag data is sent at the RPI of the consuming tag.
Consumed	A tag that receives the data of a produced tag. The data type of the consumed tag must match the data type of the produced tag. The requested packet interval (RPI) of the consumed tag determines the period at which the data updates.

Data Type

The data type defines the type of data that the tag stores, such as bit or integer.

Data types can be combined to form structures. A structure provides a unique data type that matches a specific need. Within a structure, each individual data type is called a member. Like tags, members have a name and data type. You can create your own structures, as user-defined data types.

Logix controllers contain predefined data types for use with specific instructions.

Only these data types are permitted for safety tags:

Table 21 - Valid Data Types for Safety Tags

AUX_VALVE_CONTROL	DIVERSE_INPUT	MUTING_FOUR_SENSOR_BIDIR
BOOL	EIGHT_POS_MODE_SELECTOR	MUTING_TWO_SENSOR_ASYM
CAM_PROFILE	EMERGENCY_STOP	MUTING_TWO_SENSOR_SYM
CAMSHAFT_MONITOR	ENABLE_PENDANT	MOTION_INSTRUCTION
CB_CONTINUOUS_MODE	EXT_ROUTINE_CONTROL	PHASE
CB_CRANKSHAFT_POS_MONITOR	EXT_ROUTINE_PARAMETERS	PHASE_INSTRUCTION
CB_INCH_MODE	FBD_BIT_FIELD_DISTRIBUTE	REDUNDANT_INPUT
CB_SINGLE_STROKE_MODE	FBD_CONVERT	REDUNDANT_OUTPUT
CONFIGURABLE_ROUT	FBD_COUNTER	SAFETY_MAT
CONNECTION_STATUS	FBD_LOGICAL	SERIAL_PORT_CONTROL
CONTROL	FBD_MASK_EQUAL	SFC_ACTION
COUNTER	FBD_MASKED_MOVE	SFC_STEP
DCI_MONITOR	FBD_TIMER	SFC_STOP
DCI_START	FIVE_POS_MODE_SELECTOR	SINT
DCI_STOP	INT	STRING
DCI_STOP_TEST	LIGHT_CURTAIN	THRS_ENHANCED
DCI_STOP_TEST_LOCK	MAIN_VALVE_CONTROL	TIMER
DCI_STOP_TEST_MUTE	MANUAL_VALVE_CONTROL	TWO_HAND_RUN_STATION
DINT		

IMPORTANT This restriction includes user-defined data types that contain predefined data types.

Scope

A tag's scope determines where you can access the tag data. When you create a tag, you define it as a controller tag (global data) or a program tag for a specific safety or standard program (local data). Safety tags can be controller-scoped or safety program-scoped.

Controller-scoped Tags

When safety tags are controller-scoped, all programs have access to the safety data. Tags must be controller-scoped if they are:

- used in more than one program in the project.
- used to produce or consume data.
- used to communicate with a PanelView/HMI terminal.
- used in safety tag mapping.
  See Safety Tag Mapping on page 74 for more information.

Controller-scoped safety tags can be read, but not written to, by standard routines.

IMPORTANT	Controller-scoped safety tags are readable by any standard routine. The safety tag's update rate is based on the safety task period.

Tags associated with Safety I/O and produced or consumed safety data must be controller-scoped safety tags. For produced/consumed safety tags, you must create a user-defined data type with the first member of the tag structure reserved for the status of the connection. This member is a predefined data type called CONNECTION_STATUS.

Table 22 - Additional Resources

Resource	Description
Safety Connections on page 96	Provides more information on the CONNECTION_STATUS member
Logix5000 Controllers I/O and Tag Data Programming Manual, publication 1756-PM004	Provides instructions for creating user-defined data types

Program-scoped Tags

When tags are program-scoped, the data is isolated from the other programs. Reuse of program-scoped tag names is permitted between programs.

Safety-program-scoped safety tags can only be read by or written to via a safety routine scoped in the same safety program.

Class

Tags can be classified as standard or safety. Tags classified as safety tags must have a data type that is permitted for safety tags.

When you create program-scoped tags, the class is automatically specified, depending upon whether the tag was created in a standard or safety program.

When you create controller-scoped tags, you must manually select the tag class.

Constant Value

When you designate a tag as a constant value, it cannot be modified by logic in the controller, or by an external application such as an HMI. Constant value tags cannot be forced.

RSLogix 5000 software can modify constant standard tags, and safety tags provided a safety task signature is not present. Safety tags cannot be modified if a safety task signature is present.

External Access

External Access defines the level of access that is allowed for external devices, such as an HMI, to see or modify tag values. Access via RSLogix 5000 software is not affected by this setting. The default value is read/write.

Table 23 - External Access Levels

External Access Setting	Description
None	Tags are not accessible from outside the controller.
Read Only	Tags may be browsed or read, but not written to from outside the controller.
Read/Write	Standard tags may be browsed, read, and written to from outside the controller.

For alias tags, the External Access type is equal to the type configured for the base target tag.

Produced/Consumed Safety Tags

To transfer safety data between GuardLogix controllers, you use produced and consumed safety tags. Produced and consumed tags require connections. The default connection type for produced and consumed tags is unicast in version 19 and later of RSLogix 5000 software.

Table 24 - Produced and Consumed Connections

Tag	Connection Description
Produced	A Compact GuardLogix controller can produce (send) safety tags to other 1756 or 1768 GuardLogix controllers. The producing controller uses a single connection for each consumer.
Consumed	Compact GuardLogix controllers can consume (receive) safety tags from other 1756 or 1768 GuardLogix controllers. Each consumed tag consumes one connection.

Produced and consumed safety tags are subject to the following restrictions:

- Only controller-scoped safety tags can be shared.
- Produced and consumed safety tags are limited to 128 bytes.
- Produced/consumed tag pairs must be of the same user-defined data type.
- The first member of that user-defined data type must be the predefined CONNECTION_STATUS data type.
- The request packet interval (RPI) of the consumed safety tag must match the safety task period of the producing GuardLogix controller.

Produce a Safety Tag

Follow this procedure to produce a safety tag.

1. Open the project for the controller that you want to produce data.
2. Create a user-defined data type defining the structure of the data to be produced.

   Make sure that the first data member is of the CONNECTION_STATUS data type.
3. Right-click Controller Tags and choose New Tag.
4. Set the type as Produced, the class as Safety, and the Data Type to the user-defined type you created in step 2.
5. Click Connection and enter the number of consumers.

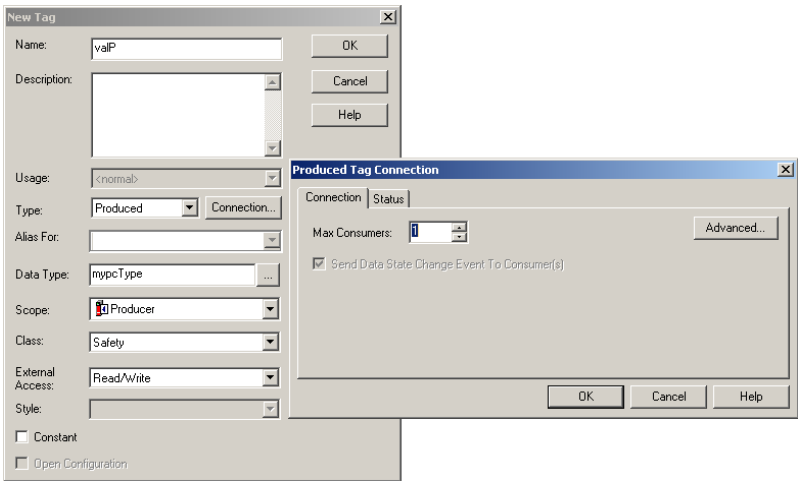

6. Click Advanced if you want to change the type of connection by unchecking 'Allow Unicast Consumer Connections'.

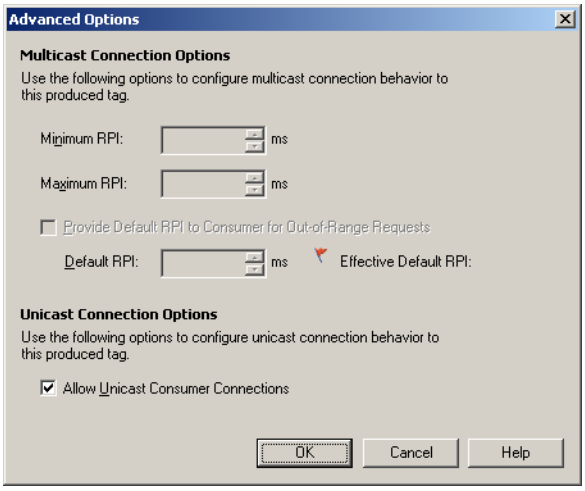

7. Click OK.

Consume Safety Tag Data

Follow these steps to consume data produced by another controller.

1. Open the controller project that will consume the data.
2. Add the controller producing the data to the I/O Configuration folder.
3. Right-click the producer controller and choose Properties.

4. Verify that the safety network number (SNN) shown on the Module Properties dialog box in the consumer's safety project matches the SNN that is configured in the producer controller's project, as shown on the producer controller's Controller Properties dialog box.

Consumer Project: Producer's Module Properties

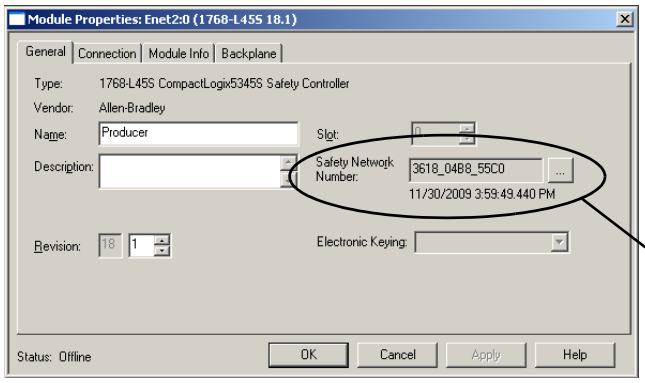

Producer Project: Producer's Controller Properties

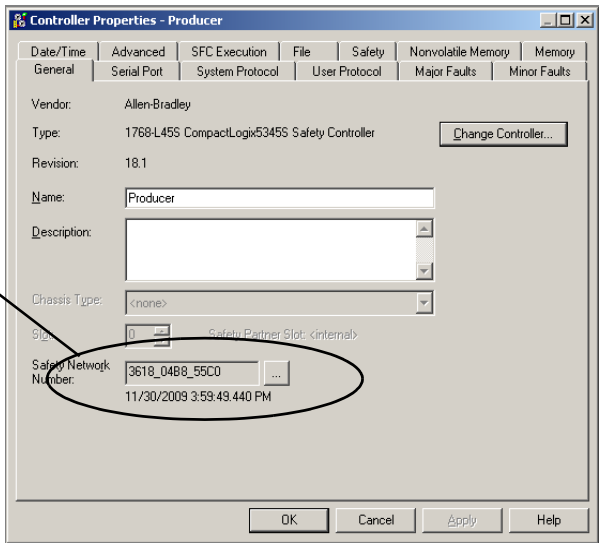

TIP An SNN can be copied and pasted by using buttons on the Safety Network Number dialog box.

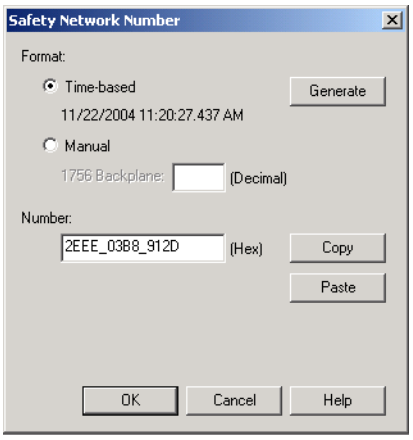

5. Create a user-defined data type identical to the one created in the producer project.

   TIP The user-defined type can be copied from the producer project and pasted into the consumer project.

6. Right-click Controller Tags and choose New Tag.

7. Set the Type as Consumed, the Class as Safety, and the Data Type to the user-defined data type you created in step 5.

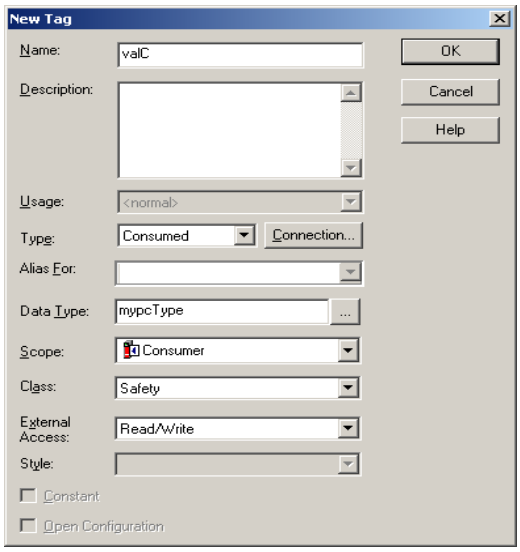

8. Click Connection to open the Consumed Tag Connection dialog box.

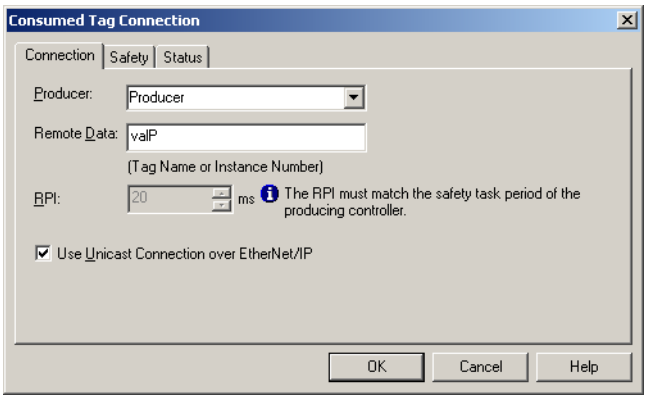

9. Select the controller that produces the data.
10. Enter the name of the produced tag.
11. Click the Safety tab.

12. Enter the requested packet interval (RPI) for the connection in 1 ms increments. The default is 20 ms.

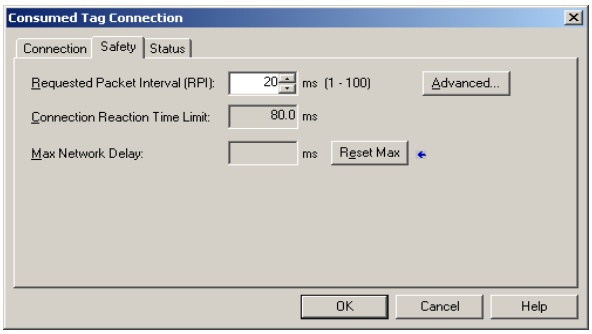

The RPI specifies the period at which data updates over a connection. The RPI of the consumed safety tag must match the safety task period of the producing safety project.

The Connection Reaction Time Limit is the maximum age of safety packets on the associated connection. For simple timing constraints, an acceptable Connection Reaction Time Limit can be achieved by adjusting the RPI.

The Max Network Delay is the maximum observed transport delay from the time the data was produced until the time the data was received. When online, you can reset the Max Network Delay by clicking Reset Max.

13. If the Connection Reaction time limit is acceptable, click OK; or for more complex requirements, click Advanced to set the Advanced Connection Reaction Time Limit parameters.

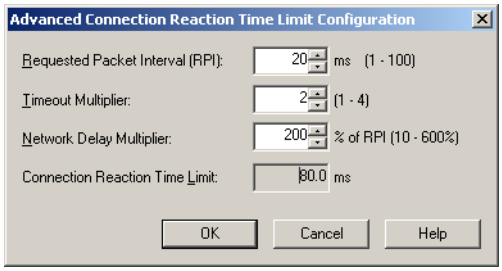

The Timeout Multiplier determines the number of RPIs to wait for a packet before declaring a connection timeout.

The Network Delay Multiplier defines the message transport time that is enforced by the CIP Safety protocol. The Network Delay Multiplier specifies the round-trip delay from the producer to the consumer and back to the producer. You can use the Network Delay Multiplier to increase or decrease the Connection Reaction Time Limit.

Additional Resources

Resource	Description
Pages 49…53	Provides more information on setting the RPI and understanding how the Max. Network Delay, Timeout Multiplier, and Network Delay Multipliers affect the Connection Reaction Time
Chapter 7	Contains information on the CONNECTION_STATUS predefined data type
Logix5000 Controllers Produced and Consumed Tags Programming Manual, publication 1756-PM011	Provides detailed information on using produced and consumed tags

Safety Tag Mapping

Controller-scoped standard tags cannot be directly accessed by a safety routine. To allow standard tag data to be used within safety task routines, the GuardLogix controllers provide a safety tag mapping feature that lets standard tag values be copied into safety task memory.

Restrictions

Safety tag mapping is subject to these restrictions:

- The safety tag and standard tag pair must be controller-scoped.
- The data types of the safety and standard tag pair must match.
- Alias tags are not allowed.
- Mapping must take place at the whole tag level. For example, myTimer.pre is not allowed if myTimer is a TIMER tag.
- A mapping pair is one standard tag mapped to one safety tag.
- You may not map a standard tag to a safety tag that has been designated as a constant.
- Tag mapping cannot be modified when:
  - the project is safety-locked.
  - a safety task signature exists.
  - the keyswitch is in RUN position.
  - a nonrecoverable safety fault exists.

ATTENTION: When using standard data in a safety routine, you are responsible for providing a reliable means of ensuring that the data is used in an appropriate manner. Using standard data in a safety tag does not make it safety data. You must not directly control a SIL 3/PLe safety output with standard tag data.

Refer to the GuardLogix Controller Systems Safety Reference Manual, publication 1756-RM093 for more information.

Create Tag Mapping Pairs

1. Choose Map Safety Tags from the Logic menu to open the Safety Tag Mapping dialog box.

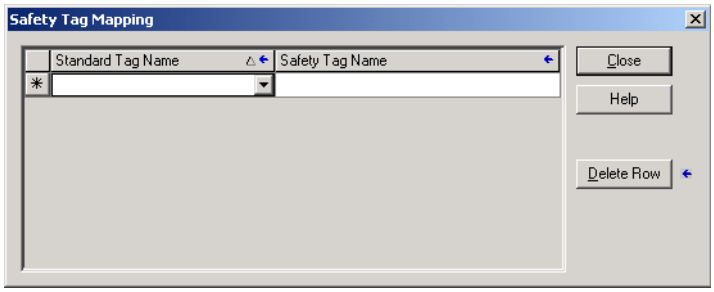

2. Add an existing tag to the Standard Tag Name or Safety Tag Name column by:
   - typing the tag name into the cell.
   - choosing a tag from the pull-down menu.

   Click the arrow to display a filtered tag browser dialog box. If you are in the Standard Tag Name column, the browser shows only controller-scoped standard tags. If you are in the Safety Tag Name column, the browser shows controller-scoped safety tags.

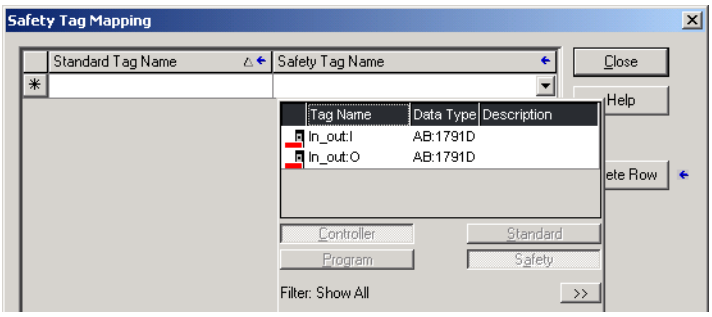

3. Add a new tag to the Standard Tag Name or Safety Tag Name column by:
   - right-clicking in the empty cell and selecting New Tag.
   - typing the tag name into the cell.
4. Right-click in the cell and choose New tagname, where tagname is the text you entered in the cell.

Monitor Tag Mapping Status

The leftmost column of the Safety Tag Mapping dialog box indicates the status of the mapped pair.

Table 25 - Tag Mapping Status Icons

Cell Contents	Description
Empty	Tag mapping is valid.
	When offline, the X icon indicates that tag mapping is invalid. You can move to another row or close the Safety Tag Mapping dialog box.(1) When online, an invalid tag map results in an error message explaining why the mapping is invalid. You cannot move to another row or close the Safety Tag Mapping dialog box if a tag mapping error exists.
	Indicates the row that currently has the focus.
	Represents the Create New Mapped Tag row.
	Represents a pending edit.

(1) Tag mapping is also checked during project verification. Invalid tag mapping results in a project verification error.

For more information, see the tag mapping restrictions on page 74.

Safety Application Protection

You can protect your application program from unauthorized changes by safety-locking the controller and by generating and recording the safety task signature.

Safety-lock the Controller

The Compact GuardLogix controller can be Safety-locked to protect safety-related control components from modification. The Safety-lock feature applies only to safety components, such as the safety task, safety programs, safety routines, safety Add-On Instructions, safety tags, Safety I/O, and the safety task signature.

The following actions are not permitted in the safety portion of the application when the controller is safety-locked:

- Online/offline programming or editing (including safety Add-On Instructions)
- Forcing Safety I/O
- Changing the inhibit state of Safety I/O or produced connections
- Safety data manipulation (except by safety routine logic)
- Generating or deleting the safety task signature

TIP The text of the online bar's safety status button indicates the safety-lock status.

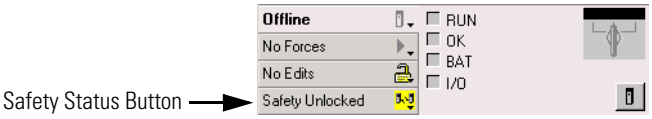

The application tray also displays the following icons to indicate the safety controller's safety-lock status.

- = controller safety-locked
- = controller safety-unlocked

You can safety-lock the controller project regardless of whether you are online or offline and regardless of whether you have the original source of the program. However, no safety forces or pending online safety edits may be present.

Safety-locked or -unlocked status cannot be changed when the keyswitch is in the RUN position.

You can Safety-lock and -unlock the controller from the Safety tab of the Controller Properties dialog box or by choosing Tools>Safety>Safety Lock/Unlock.

Figure 20 - Safety-locking the Controller

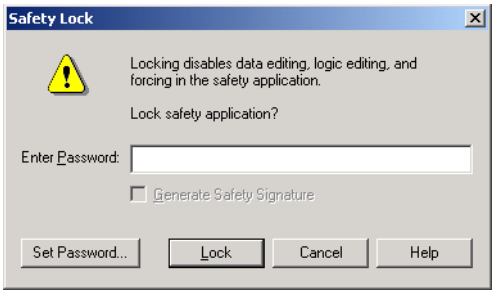

If you set a password for the safety-lock feature, you must type it in the Enter Password field. Otherwise, click Lock.

You can also set or change the password from the Safety Lock dialog box. See page 25.

The safety-lock feature, described in this section, and standard RSLogix-security measures are applicable to Compact GuardLogix controller applications.

Refer to the Logix5000 Controllers Security Programming Manual, publication 1756-PM016, for information on RSLogix 5000 Security features.

Generate a Safety Task Signature

Before verification testing, you must generate the safety task signature. You can generate the safety task signature only when online with the safety-unlocked Compact GuardLogix controller in Program mode, and with no safety forces, pending online safety edits, or safety faults. The safety status must be Safety Task OK.

TIP You can view the safety status via the safety status button on the online bar (see page 95) or on the Safety tab of the Controller Properties dialog box, as shown on page 78.

You can generate the safety task signature from the Safety tab of the Controller Properties dialog box by clicking Generate. You can also choose Tools>Safety>Generate Signature.

Figure 21 - Safety Tab

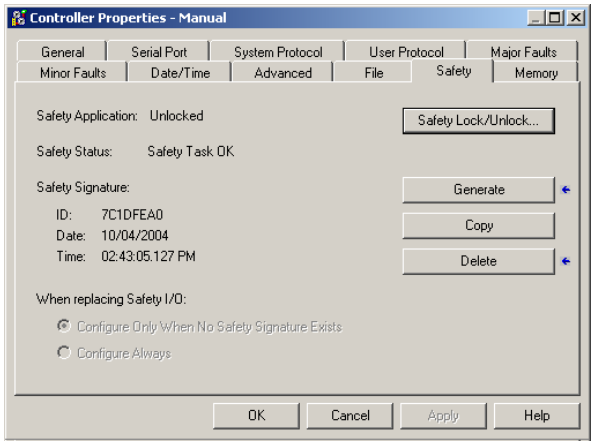

If a previous signature exists, you are prompted to overwrite it.

When a safety task signature exists, the following actions are not permitted in the safety portion of the application:

- Online/offline programming or editing (including safety Add-On Instructions)
- Forcing Safety I/O
- Changing the inhibit state of Safety I/O or producer controllers
- Safety data manipulation (except by safety routine logic)

Copy the Safety Task Signature

You can use the Copy button to create a record of the safety task signature for use in safety project documentation, comparison, and validation. Click Copy, to copy the ID, Date, and Time components to the Windows clipboard.

Delete the Safety Task Signature

Click Delete to delete the safety task signature. The safety task signature cannot be deleted when:

- the controller is safety-locked.
- the controller is in Run mode with the keyswitch in RUN.

ATTENTION: If you delete the safety task signature, you must retest and revalidate your system to meet SIL 3/PLe.

Refer to the GuardLogix Controller Systems Safety Reference Manual, publication 1756-RM093, for more information on SIL 3/PLe requirements.

Software Restrictions

Restrictions limiting the availability of some menu items and features (that is, cut, paste, delete, search and replace) are imposed by the programming software to protect safety components from being modified whenever:

- the controller is safety-locked.
- a safety task signature exists.
- safety faults are present.
- a non-recoverable safety fault is present.

If even one of these conditions apply, you may not:

- create or modify safety objects, including safety programs, safety routines, safety tags, safety Add-On Instructions, and Safety I/O modules.

  IMPORTANT The scan times of the safety task and safety programs can be reset when online.

- apply forces to safety tags.
- create new safety tag mappings.
- modify or delete tag mappings.
- modify or delete user-defined data types that are used by safety tags.
- modify the controller name, description, slot, and safety network number.
- modify or delete the safety task signature, when safety-locked.

Additional Resources

These documents contain detailed information pertinent to the development of applications.

Resource	Description
Logix5000 Controllers Tasks, Programs, and Routines, publication 1756-PM005	Provides detailed information on managing tasks in RSLogix 5000 software
Logix5000 Controllers Add-On Instructions Programming Manual, publication 1756-PM010	Provides information on creating and using Add-On Instructions
Logix5000 Controllers Produced and Consumed Tags Programming Manual, publication 1756-PM011	Contains more information on how to produce and consume tags between controllers

Go Online with the Controller

Introduction

Topic	Page
Connecting the Controller to the Network	81
Configuring the Network Driver	83
Understanding the Factors that Affect Going Online	84
Download	87
Upload	89
Go Online	90

Connecting the Controller to the Network

If you have not done so, connect the controller to the network.

Table 26 - Network Connections

For this network	Connect the controller via a
Serial	1756-CP3 or 1747-CP3 cable
EtherNet/IP	1768-ENBT module to the left of the Compact GuardLogix controller
ControlNet	1768-CNB module to the left of the Compact GuardLogix controller

Connect the Controller via a Serial Network

The 1756-CP3 or 1747-CP3 cable attaches the serial port of the workstation directly to the controller.

TIP If you make your own cable:

- limit the length to 15.2 m (50 ft).
- wire the connectors as shown below.
- attach the shield to both connectors.

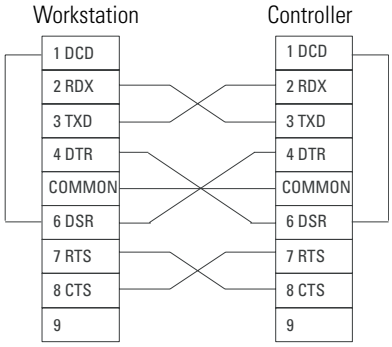

Connect Your EtherNet/IP Device and Computer

WARNING: If you connect or disconnect the communication cable with power applied to this module or any device on the network, an electrical arc can occur. This could cause an explosion in hazardous location installations.

Connect your EtherNet/IP device and computer by using an Ethernet cable.

Figure 22 - Ethernet Connections

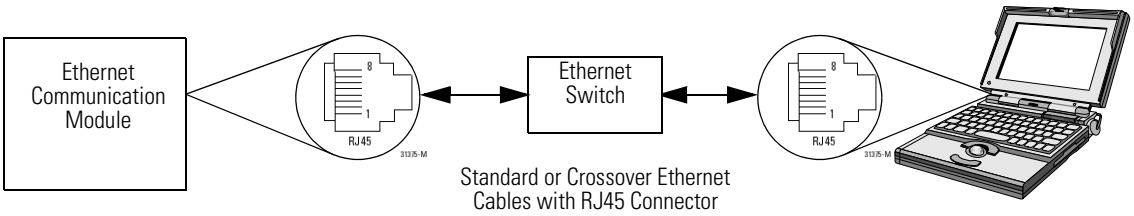

Connect Your ControlNet Communication Module and Your Computer

To access the ControlNet network, you can:

- connect directly to the network.
- connect to a serial or EtherNet/IP network and browse (bridge) to the desired network. This requires no additional programming.

Configuring the Network Driver

RSLinx software handles communication between Compact GuardLogix controllers and RSLogix 5000 software. To communicate with the controller, configure RSLinx software for the required communication network.

Table 27 - Network Drivers

For this network	Configure this driver
Serial	RS-232 DF1 devices
EtherNet/IP	EtherNet/IP driver or Ethernet devices
ControlNet	ControlNet drivers

Configure a Serial Communication Driver

1. Start RSLinx software.
2. From the Communication menu, choose Configure Drivers.
3. From the Available Driver Types pull-down menu, choose the driver.
4. Click Add New.
5. Click OK to accept the default name for the driver.
6. From the Comm Port pull-down menu, choose the serial port (on the workstation) to which the cable is connected.
7. From the Device pull-down menu, choose CompactLogix Serial Port.
8. Click Auto-Configure.
9. Does the dialog box display the following message?

   Auto Configuration Successful!

If	Then
Yes	Click OK.
No	Go to Step 6 and verify that you selected the correct comm port.

10. Click Close.

Configuring an EtherNet/IP or ControlNet Driver

For information on configuring a driver, refer to the appropriate publication.

- EtherNet/IP Modules in Logix5000 Control Systems, publication ENET-UM001
- The ControlNet Modules in Logix5000 Control Systems User Manual, publication CNET-UM001

Understanding the Factors that Affect Going Online

RSLogix 5000 software determines whether you can go online with a target controller based on whether the offline project is new or whether changes occurred in the offline project. If the project is new, you must first download the project to the controller. If changes occurred to the project, you are prompted to upload or download. If no changes occurred, you can go online to monitor the execution of the project.

A number of factors affect these processes, including Project to Controller Match feature, the safety status and faults, the existence of a safety task signature, and the safety-lock/-unlock status of the project and the controller.

Project to Controller Matching

The Project to Controller Match feature affects the download, upload, and go online processes of standard and safety projects.

If the Project to Controller Match feature is enabled in the offline project, RSLogix 5000 software compares the serial number of the controller in the offline project to that of the connected controller. If they do not match, you must cancel the download/upload, connect to the correct controller, or confirm that you are connected to the correct controller, which updates the serial number in the project to match the target controller.

Firmware Revision Matching

Firmware revision matching affects the download process. If the revision of the controller does not match the revision of the project, you are prompted to update the firmware of the controller. RSLogix 5000 software lets you update the firmware as part of the download sequence.

IMPORTANT	To update the firmware of the controller, first install a firmware upgrade kit. An upgrade kit ships on a supplemental CD along with RSLogix 5000 software.
TIP	You can also upgrade the firmware by choosing ControlFlash from the Tools menu in RSLogix 5000 software.

Safety Status/Faults

Uploading program logic and going online is allowed regardless of safety status. Safety status and faults affect the download process only.

You can view the safety status via the Safety tab on the Controller Properties dialog box.

Safety Task Signature and Safety-locked and -unlocked Status

The existence of a safety task signature and the safety-locked or -unlocked status of the controller affect both the upload and download processes.

On Upload

If the controller has a safety task signature, the safety task signature and the safety task lock status are uploaded with the project. For example, if the project in the controller was safety-unlocked, the offline project remains safety-unlocked following the upload, even if it was locked prior to the upload.

Following an upload, the safety task signature in the offline project matches the controller's safety task signature.

On Download

The existence of a safety task signature, and the controller's safety-lock status, determines whether or not a download can proceed.

Table 28 - Effect of Safety-lock and Safety Task Signature on Download Operation

Safety-lock Status	Safety Task Signature Status	Download Functionality
Controller safety-unlocked	Safety task signature in the offline project matches the safety task signature in the controller.	All standard project components are downloaded. Safety tags are reinitialized to the values they had when the safety task signature was created. The safety task is not downloaded. Safety lock status matches the status in the offline project.
	Safety task signatures do not match.	If the controller had a safety task signature, it is automatically deleted, and the entire project is downloaded. Safety lock status matches the status in the offline project.
Controller safety-locked	Safety task signatures match.	If the offline project and the controller are safety-locked, all standard project components are downloaded and the safety task is reinitialized to the values they had when the safety task signature was created. If the offline project is not safety-locked, but the controller is, the download is blocked and you must first unlock the controller to allow the download to proceed.
	Safety task signatures do not match.	You must first safety-unlock the controller to allow the download to proceed. If the controller had a safety task signature, it is automatically deleted, and the entire project is downloaded. Safety lock status matches the status in the offline project.

IMPORTANT During a download to a controller that is safety-unlocked, if firmware in the controller is different than in the offline project, either:

- flash the controller so that it matches the offline project. Once the update is completed, the entire project is downloaded.
- upgrade the project to the controller version.

If you upgrade the project, the safety task signature is deleted, and the system requires revalidation.

Download

Follow these steps to transfer your project from your computer to your controller.

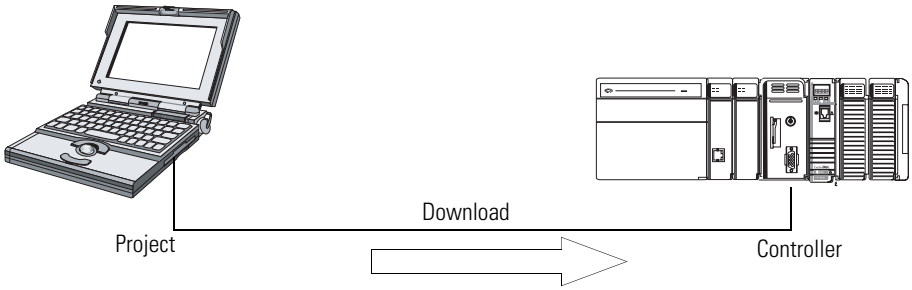

1. Turn the keyswitch of the controller to REM.
2. Open the RSLogix 5000 project that you want to download.
3. Define the path to the controller.
   a. Click Who Active .
   b. Select the controller.
      To open a level, click the + sign. If a controller is already selected, make sure that it is the correct controller.
4. Click Download.

   The software compares the following information in the offline project and the controller:
   - Controller serial number (if project to controller match is selected)
   - Firmware major and minor revisions
   - Safety status
   - Safety task signature (if one exists)
   - Safety-lock status

5. Follow the directions in this table to complete the download based on the software's response.

If the software indicates	Then
Download to the controller.	Choose Download. The project downloads to the controller and RSLogix 5000 software goes online.
Unable to download to the controller. Mismatch between the offline project and the controller serial number. Selected controller may be the wrong controller.	Connect to the correct controller or verify that this is the correct controller. If it is the correct controller, select the Update project serial number checkbox to allow the download to proceed. The project serial number is modified to match the controller serial number.
Unable to download to the controller. The major revision of the offline project and the controller's firmware are not compatible.	Choose Update Firmware. Choose the required revision and click Update. Confirm your selection by clicking Yes.
Unable to download to controller. The internal safety partner hardware has failed.	Replace the controller.
Unable to download to the controller. The firmware update of the controller is incomplete.	Choose Update Firmware. Choose the required revision and click Update. Confirm your selection by clicking Yes.
Unable to download to controller. Safety partnership has not been established.	Cancel this download process and attempt a new download.
Unable to download to controller. Incompatible safety task signature cannot be deleted while the project is safety-locked.	Cancel the download. To download the project, you must safety-unlock the offline project, delete the safety task signature, and download the project. **IMPORTANT:** The safety system requires revalidation.
Cannot download in a manner that preserves safety task signature. Controller's firmware minor revision is not compatible with safety task signature in offline project.	• If the firmware minor revision is incompatible, to preserve the safety task signature, update the firmware revision in the controller to exactly match the offline project. Then download the offline project. • To proceed with the download despite the safety task signature incompatibility, click Download. The safety task signature is deleted. **IMPORTANT:** The safety system requires revalidation.
Unable to download to controller. Controller is locked. Controller and offline project safety task signatures do not match.	Choose Unlock. The Safety Unlock for Download dialog box appears. If the Delete Signature checkbox is selected and you choose Unlock, you must confirm the deletion by selecting Yes.
A nonrecoverable safety fault will occur in the safety controller. No designated coordinated system time (CST) master exists.	Check Enable Time Synchronization and click Download to proceed.

Following a successful download, the safety-locked status and safety task signature of the controller match the project that was downloaded. Safety data is initialized to the values that existed when the safety task signature was created.

Upload

Follow these steps to transfer a project from the controller to your computer.

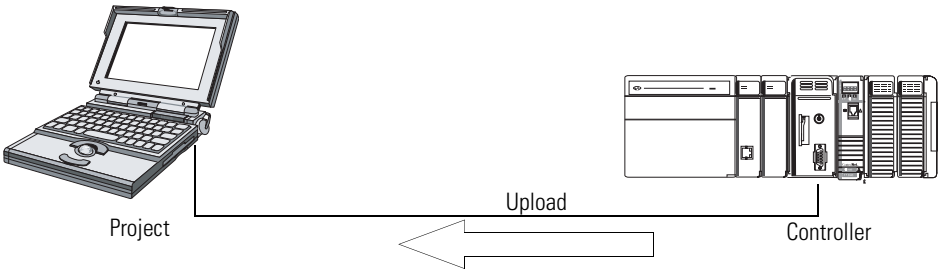

1. Define the path to the controller.
   a. Click Who Active .
   b. Select the controller.
      To expand a level, click the + sign. If a controller is already selected, make sure that it is the correct controller.
2. Click Upload.
3. If the project file does not exist, choose File>Select>Yes.
4. If the project file exists, select it.

   If the project to controller match is enabled, RSLogix 5000 software checks whether the serial number of the open project and the serial number of the controller match.

   If the controller serial numbers do not match, you can:
   - cancel the upload and connect to a matching controller. Then, start the upload procedure again.
   - select a new project to upload into or select another project by choosing Select File.
   - update the project serial number to match the controller by checking the Update Project Serial Number checkbox and choosing Upload.
5. The software checks whether the open project matches the controller project.
   a. If the projects do not match, you must select a matching file or cancel the upload process.
   b. If the projects match, the software checks for changes in the offline (open) project.

6. The software checks for changes in the offline project.
   a. If there are no changes in the offline project, you can go online without uploading. Click Go Online.
   b. If there are changes in the open project that are not present in the controller, you can choose to upload the project, cancel the upload, or select another file.

   If you choose Upload, the standard and safety applications are uploaded. If a safety task signature exists, it is also uploaded. The safety-lock status of the project reflects the original status of the online (controller) project.

   TIP Prior to the upload, if an offline safety task signature exists, or the offline project is safety-locked but the controller is safety-unlocked or has no safety task signature, the offline safety task signature and safety-locked state are replaced by the online values (safety-unlocked with no safety task signature). If you do not want to make these changes permanent, do not save the offline project following the upload.

Go Online

Follow these steps to go online to monitor a project that the controller is executing.

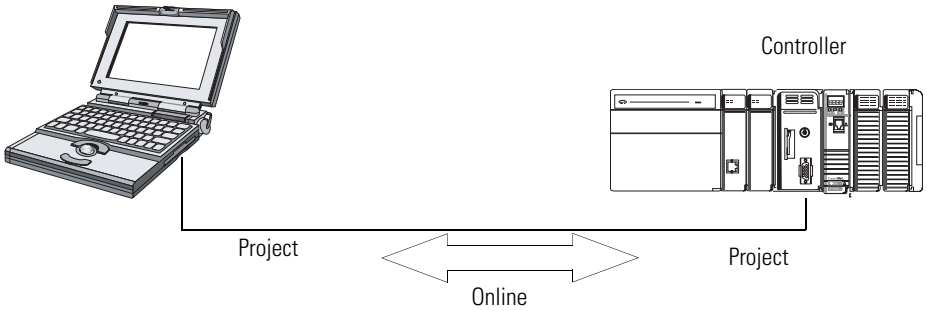

1. Define the path to the controller.
   a. Click Who Active .
   b. Select the controller.
      To expand a level, click the + sign. If a controller is already selected, make sure that it is the correct controller.
2. Click Go Online.

   The software checks whether the:
   - offline project and controller serial numbers match (if Project to Controller Match is selected).
   - offline project contains changes that are not in the controller project.
   - revisions of the offline project and controller firmware match.
   - offline project or the controller are safety-locked.
   - offline project or the controller have compatible safety task signatures.

3. Follow the directions in the table below to connect to the controller.

Table 29 - Connect to the Controller

If the software indicates	Then
Unable to connect to controller. Mismatch between the offline project and the controller serial number. Selected controller may be the wrong controller.	Connect to the correct controller, select another project file, or choose the Update project serial number checkbox and choose Go Online… to connect to the controller and update the offline project serial number to match the controller.
Unable to connect to controller. The revision of the offline project and the controller's firmware are not compatible.	Choose one of the following options: • Choose Update Firmware. Choose the required revision and click Update. Confirm your selection by clicking Yes. **IMPORTANT:** The online project is deleted. • To preserve the online project, cancel the online process and install a version of RSLogix 5000 software that is compatible with the firmware revision of your controller.
You need to upload or download to go online by using the open project.	Choose one of the following options: • Upload to update the offline project. • Download to update the controller project. • Choose File to select another offline project.
Unable to connect in a manner that preserves safety task signature. Controller's firmware minor revision is not compatible with safety task signature in offline project.	• To preserve the safety task signature when the firmware minor revision is incompatible, update the firmware revision in the controller to exactly match the offline project. Then go online to the controller. • To proceed with the download despite the safety task signature incompatibility, click Download. The safety task signature is deleted. **IMPORTANT:** The safety system requires revalidation.
Unable to connect to controller. Incompatible safety task signature cannot be deleted while project is safety-locked.	Cancel the online process. You must safety-unlock the offline project before attempting to go online.

When the controller and RSLogix 5000 software are online, the safety-locked status and safety task signature of the controller match the controller's project. The safety-lock status and safety task signature of the offline project are overwritten by the controller. If you do not want the changes to the offline project to be permanent, do not save the project file following the go online process.

Notes:

Monitor Status and Handle Faults

Introduction

Topic	Page
Monitor Controller Status	93
Monitoring Connections	96
Monitor Safety Status	97
Controller Faults	98
Developing a Fault Routine	99

Monitor Controller Status

You can monitor status by using the controller status indicators and fault codes.

Controller Status Indicators

Indicator	Status	Description
PWR	Green	The controller is providing power to 1768 modules in the system.
	Red	The power supply is not producing valid 24V power to the 1768 modules.
	Off	The power supply is turned off, lacks adequate input power, or has failed.
I/O PWR	Off	Either the controller or the power supply is not operating properly.
	Green	The controller is operating properly.
	Flashing Red/Green or Solid Red	An endcap or 1769 I/O module is not properly attached.
RUN	Off	The controller is in Program or Test mode.
	Green	The controller is in Run mode.
FORCE	Off	No tags contain I/O force values or I/O forces are inactive (disabled).
	Amber	I/O forces are active (enabled). I/O force values may or may not exist.
	Flashing Amber	One or more of input or output addresses have been forces to an On or Off state, but the forces have not been enabled. Enable forces or remove the individual I/O from being forced.
MEM SAVE	Off	The user program and configuration data are not actively being saved to flash memory.
	Green	The use program and configuration data are being saved to flash memory.
I/O	Off	There are no devices in the I/O configuration of the controller or the controller does not contain a project.
	Green	The controller is communicating with all of the devices in its I/O configuration.
	Flashing Green	One or more devices in the controller's I/O configuration are not responding.
	Flashing Red	The controller is not communicating with any of the devices in its I/O configuration.

Indicator	Status	Description
OK	Off	No power is applied. If MEM SAVE indicator is green, the user program and configuration data are being saved to flash memory.
	Flashing Red	The controller requires a firmware update or a firmware update is in progress. A recoverable major fault occurred on the controller. A non-recoverable major fault occurred on the controller.
	Red	The controller detected a nonrecoverable major fault so it cleared the project from memory.
	Green	Controller is OK.
	Flashing Green	The controller is storing or loading a project to or from nonvolatile memory.
CF	Off	There is no CompactFlash card activity.
	Flashing Green	The controller is reading from or writing to the CompactFlash card. **IMPORTANT:** Do not remove the CompactFlash card while the controller is reading from or writing to the card. Removing the card during a read or write could corrupt data on the card, data in the controller, and firmware installed on the controller.
	Flashing Red	The CompactFlash card does not have a valid file system and must be replaced.
DCH0	Off	Channel 0 is configured differently than the default serial configuration.
	Green	Channel 0 has the default serial configuration.
CH0	Off	No RS-232 activity.
	Green	RS-232 activity.
SAFE RUN	Off	The user safety task or safety outputs are disabled. The controller is in the PROG mode, test mode, or the safety task is faulted.
	Green	The user safety task and safety outputs are enabled. The safety task is executing. Safety task signature is present.
	Flashing Green	The user safety task and safety outputs are enabled. The safety task is executing. Safety task signature is not present.
SAFETY TASK	Off	No partnership established.
	Green	Safety controller status is OK. The coordinated system time (CST) is synchronized and safety I/O connections are established.
	Flashing Green	Safety controller status is OK. The coordinated system time (CST) is not synchronized.
	Red	Safety partnership was lost.
	Flashing Red	Safety task is inoperable.
SAFETY LOCK	Off	Safety task is not locked.
	Green	Safety task is locked.
SAFETY OK	Off	No power is applied.
	Green	The safety partner is OK.
	Flashing Green	The safety partner is storing or loading a project to or from nonvolatile memory.
	Red	The safety partner detected a nonrecoverable major fault, so it cleared the project from its memory.
	Flashing Red	The internal safety partner requires a firmware update or a firmware update is in progress. A recoverable major fault occurred on the safety partner. A nonrecoverable major fault occurred on the safety partner.

Online Bar

The online bar displays project and controller information, including the controller's status, force status, online edit status, and safety status.

Figure 23 - Status Buttons

When the Controller Status button is selected as shown above, the online bar shows the controller's mode (RUN) and status (OK). The I/O indicator combines the status of standard and Safety I/O and behaves just like the status indicator on the controller. The I/O with the most significant error status is displayed next to the status indicator.

When the Safety Status button is selected as shown below, the online bar displays the safety task signature.

Figure 24 - Safety Signature Online Display

The Safety Status button itself indicates whether the controller is safety-locked or -unlocked, or faulted. It also displays an icon that shows the safety status.

Table 30 - Safety Status Icon

If the safety status is	This icon is displayed
Safety Task OK	
Safety Task Inoperable	
Safety Unavailable	
Offline	

Icons are green when the controller is safety-locked, yellow when the controller is safety-unlocked, and red when the controller has a safety fault. When a safety task signature exists, the icon includes a small checkmark.

Monitoring Connections

You can monitor the status of standard and safety connections.

All Connections

If communication with a device in the I/O configuration of the controller does not occur for 100 ms, communication times out and the controller produces the following warnings:

- The I/O indicator on the front of the controller flashes green.
- An alert symbol ⚠ shows over the I/O configuration folder and over the device that has timed out.
- A module fault is produced, which you can access through:
  - the Connections tab of the Module Properties dialog box for the module.
  - the GSV instruction.

ATTENTION: Safety I/O and produce/consume connections cannot be configured to automatically fault the controller when a connection is lost. Therefore, you need to monitor for connection faults to be sure that the safety system maintains SIL 3/PLe integrity.

See Safety Connections.

Safety Connections

For tags associated with produced or consumed safety data, you can monitor the status of safety connections by using the CONNECTION_STATUS member. For monitoring input and output connections, Safety I/O tags have a connection status member called SafetyStatus. Both data types contain two bits: RunMode and ConnectionFaulted.

The RunMode value indicates if consumed data is actively being updated by a device that is in the Run Mode (1) or Idle State (0). Idle state is indicated if the connection is closed, the safety task is faulted, or the remote controller or device is in Program mode or Test mode.

The ConnectionFaulted value indicates whether the safety connection between the safety producer and the safety consumer is Valid (0) or Faulted (1). If ConnectionFaulted is set to Faulted (1) as a result of a loss of the physical connection, the safety data is reset to zero.

The following table describes the combinations of the RunMode and ConnectionFaulted states.

Table 31 - Safety Connection Status

RunMode Status	ConnectionFaulted Status	Safety Connection Operation
1 = Run	0 = Valid	Data is actively being controlled by the producing device. The producing device is in Run mode.
0 = Idle	0 = Valid	The connection is active and the producing device is in the Idle state. The safety data is reset to zero.
0 = Idle	1 = Faulted	The safety connection is faulted. The state of the producing device is unknown. The safety data is reset to zero.
1 = Run	1 = Faulted	Invalid state.

If a module is inhibited, the ConnectionFaulted bit is set to Faulted (1) and the RunMode bit is set to Idle (0) for each connection associated with the module. As a result, safety consumed data is reset to zero.

Monitoring Status Flags

Logix controllers, including Compact GuardLogix controllers, support status keywords that you can use in your logic to monitor certain events.

For more information on how to use these keywords, refer to the Logix5000 Controllers Controller Information and Status Programming Manual, publication 1756-PM015.

Monitor Safety Status

View controller safety status information on the safety status button on the online bar and on the Safety tab of the Controller Properties dialog box.

Figure 25 - Safety Task Status

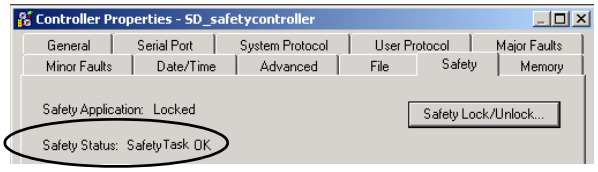

The possible values for safety status are:

- safety partner is unavailable.
- safety firmware is incompatible.
- safety task inoperable.
- safety task OK.

With the exception of safety task OK, the descriptions indicate that nonrecoverable safety faults exist.

See Major Safety Faults (Type 14) on page 99 for fault codes and corrective actions.

Controller Faults

Faults in the Compact GuardLogix system can be nonrecoverable controller faults, nonrecoverable safety faults in the safety application, or recoverable safety faults in the safety application.

Nonrecoverable Controller Faults

These occur when the controller's internal diagnostics fail. If a nonrecoverable controller fault occurs, safety task execution stops and CIP Safety I/O modules are placed in the safe state. Recovery requires that you download the application program again.

Nonrecoverable Safety Faults in the Safety Application

If a nonrecoverable safety fault occurs in the safety application, safety logic and the safety protocol are terminated. Safety task watchdog faults fall into this category.

When the safety task encounters a nonrecoverable safety fault that is cleared programmatically in the Controller Fault Handler, the standard application continues to execute.

ATTENTION: Overriding the safety fault does not clear it! If you override the safety fault, it is your responsibility to prove that doing so maintains safe operation.

You must provide proof to your certifying agency that allowing a portion of the system to continue to operate maintains safe operation.

If a safety task signature exists, you only need to clear the fault to enable the safety task to run. If no safety task signature exists, the safety task cannot run again until the entire application is downloaded again.

Recoverable Faults in the Safety Application

If a recoverable fault occurs in the safety application, the system may or may not halt the execution of the safety task, depending upon whether or not the fault is handled by the Program Fault Handler in the safety application.

When a recoverable fault is cleared programmatically, the safety task is allowed to continue without interruption.

When a recoverable fault in the safety application is not cleared programmatically, a Type 14, Code 2 recoverable safety fault occurs. The safety program execution is stopped, and safety protocol connections are closed and reopened to reinitialize them. Safety outputs are placed in the safe state and the

producer of safety-consumed tags commands the consumers to place them in a safe state, as well.

Recoverable faults let you edit the standard and safety application as required to correct the cause of the fault. However, if a safety task signature exists or the controller is safety-locked, you must first unlock the controller and delete the safety task signature before you can edit the safety application.

Viewing Faults

The Recent Faults dialog box on the Major Faults tab of the Controller Properties dialog box contains two sub-tabs, one for standard faults and one for safety faults.

Fault Codes

The Major Safety Faults (Type 14) table shows the fault codes specific to Compact GuardLogix controllers. The type and code correspond to the type and code displayed on the Major Faults tab of the Controller Properties dialog box and in the PROGRAM object, MAJORFAULTRECORD (or MINORFAULTRECORD) attribute.

Table 32 - Major Safety Faults (Type 14)

Code	Cause	Status	Corrective Action
01	Task watchdog expired. User task has not completed in a specified period of time. A program error caused an infinite loop, the program is too complex to execute as quickly as specified, a higher priority task is keeping this task from finishing.	Nonrecoverable	Clear the fault. If a safety task signature exists, safety memory is re-initialized and the safety task begins executing. If a safety task signature does not exist, you must re-download the program to allow the safety task to run.
02	An error exists in a routine of the safety task.	Recoverable	Correct the error in the user-program logic.
07	Safety task is inoperable. This fault occurs when the safety logic is invalid, for example a watchdog timeout occurred, or memory is corrupt.	Nonrecoverable	Clear the fault. If a safety task signature exists, safety memory is re-initialized via the safety task signature and the safety task begins executing. If a safety task signature does not exist, you must download the program again to allow the safety task to run.
08	Coordinated system time (CST) not found.	Nonrecoverable	Clear the fault. Configure a device to be the CST master.

The Logix5000 Controllers Major and Minor Faults Programming Manual, publication 1756-PM014, contains descriptions of the fault codes common to Logix controllers.

Developing a Fault Routine

If a fault condition occurs that is severe enough for the controller to shut down, the controller generates a major fault and stops the execution of logic.

Depending on your application, you may not want all safety faults to shut down your entire system. In those situations, you can use a fault routine to clear a

specific fault and let the standard control portion of your system continue to operate or configure some outputs to remain ON.

ATTENTION: You must provide proof to your certifying agency that allowing a portion of the system to continue to operate maintains safe operation.

The controller supports two levels for handling major faults.

- Program Fault Routine
- Controller Fault Handler

Both routines can use the GSV and SSV instructions as described on page 100.

Program Fault Routine

Each program can have its own fault routine. The controller executes the program's fault routine when an instruction fault occurs. If the program's fault routine does not clear the fault, or if a program fault routine does not exist, the controller proceeds to execute the controller fault handler, if one exists.

Controller Fault Handler

The controller fault handler is an optional component that executes when the program fault routine could not clear the fault or does not exist.

You can create only one program for the controller fault handler. After you create that program, you must configure a routine as the main routine.

The Logix5000 Controllers Major and Minor Faults Programming Manual, publication 1756-PM014, provides details on creating and testing a fault routine.

Use GSV/SSV Instructions

Logix controllers store system data in objects rather than in status files. You can use the Get System Value (GSV) and Set System Value (SSV) instructions to get and set controller data.

The GSV instruction retrieves the specified information and places it in the specified destination. The SSV instruction changes the specified attribute with data from the source of the instruction. When you enter a GSV or SSV instruction, the programming software displays the object classes, object names, and attribute names for each instruction.

For standard tasks, you can use the GSV instruction to get values for the available attributes. When using the SSV instruction, the software displays only those attributes you are allowed to set.

For the safety task, the GSV and SSV instructions are more restricted. Note that SSV instructions in safety and standard tasks cannot set bit 0 (major fault on error) in the mode attribute of a Safety I/O module.

For safety objects, the GSV/SSV Accessibility table on page 101 shows which attributes you can get values for by using the GSV instruction, and which attributes you are allowed to set by using the SSV instruction, in the safety and standard tasks.

ATTENTION: Use the GSV/SSV instructions carefully. Making changes to objects can cause unexpected controller operation or injury to personnel.

Table 33 - GSV/SSV Accessibility

Safety Object	Attribute Name	Data Type	Attribute Description	Accessible from the Safety Task		Accessible from Standard Tasks	
				GSV	SSV	GSV[4]	SSV
Safety Task	Instance	DINT	Provides instance number of this task object. Valid values are 0…31.	✓		✓	
	MaximumInterval	DINT[2]	The max time interval between successive executions of this task.			✓	✓
	MaximumScanTime	DINT	Max recorded execution time (ms) for this task.			✓	✓
	MinimumInterval	DINT[2]	The min time interval between successive executions of this task.			✓	✓
	Priority	INT	Relative priority of this task as compared to other tasks. Valid values are 0…15.	✓		✓	
	Rate	DINT	Period for the task (in ms), or timeout value for the task (in ms).	✓		✓	
	Watchdog	DINT	Time limit (in ms) for execution of all programs associated with this task.	✓		✓	
Safety Program	Instance	DINT	Provides the instance number of the program object.	✓		✓	
	MajorFaultRecord[1]	DINT[11]	Records major faults for this program.	✓	✓	✓	
	MaximumScanTime	DINT	Max recorded execution time (ms) for this program.			✓	✓
Safety Routine	Instance	DINT	Provides the instance number for this routine object. Valid values are 0…65,535.	✓			

Table 33 - GSV/SSV Accessibility

Safety Object	Attribute Name	Data Type	Attribute Description	Accessible from the Safety Task		Accessible from Standard Tasks	
				GSV	SSV	GSV[4]	SSV
Safety Controller	SafetyLocked	SINT	Indicates whether the controller is safety-locked or -unlocked.	✓		✓	
	SafetyStatus[2]	INT	Specifies the safety status as: • Safety task OK. (1000000000000000) • Safety task inoperable. (1000000000000001) • Firmware incompatible. (00000000000000011)			✓	
	SafetySignatureExists	SINT	Indicates whether the safety task signature is present.	✓		✓	
	SafetySignatureID	DINT	32-bit identification number.			✓	
	SafetySignature	String[3]	32-bit identification number.			✓	
	SafetyTaskFaultRecord[1][2]	DINT[11]	Records safety task faults.			✓	
AOI (Safety)	LastEditDate	LINT	Date and time stamp of the last edit to an Add-On Instruction definition.			✓	
	SignatureID	DINT	ID number.			✓	
	SafetySignatureID	DINT	32-bit identification number.			✓	

(1) See Access FaultRecord Attributes on page 102 for information on how to access this attribute.
(2) See Capture Fault Information on page 103 for information on how to access this attribute.
(3) Length = 37.
(4) From the standard task, GSV accessibility of safety object attributes is the same as for standard object attributes.

Access FaultRecord Attributes

Create a user-defined structure to simplify access to the MajorFaultRecord and SafetyTaskFaultRecord attributes.

Table 34 - Parameters for Accessing FaultRecord Attributes

Name	Data Type	Style	Description
TimeLow	DINT	Decimal	Lower 32 bits of the fault timestamp value
TimeHigh	DINT	Decimal	Upper 32 bits of the fault timestamp value
Type	INT	Decimal	Fault type (program, I/O, or other)
Code	INT	Decimal	Unique code for this fault (dependent on fault type)
Info	DINT[8]	Hexadecimal	Fault-specific information (dependent on fault type and code)

For more information on using the GSV and SSV instructions, refer to the Input/Output Instructions chapter of the Logix5000 Controllers General Instructions Reference Manual, publication 1756-RM003.

Capture Fault Information

The SafetyStatus and SafetyTaskFaultRecord attributes can capture information about non-recoverable faults. Use a GSV instruction in the controller fault handler to capture and store fault information. The GSV instruction can be used in a standard task in conjunction with a controller fault handler routine that clears the fault and lets the standard tasks continue executing.

Notes:

Store and Load Projects Using Nonvolatile (Removable) Memory

Introduction

Topic	Page
Storing a Safety Project	106
Loading a Safety Project	107
Manage Firmware with Firmware Supervisor	108

Compact GuardLogix controllers, revision 18 or later, support a 1784-CF64 or 1784-CF128 CompactFlash card for nonvolatile memory. Nonvolatile memory lets you keep a copy of your project on the controller. The controller does not need power or a battery to keep this copy.

TIP The Compact GuardLogix controller does not require a battery. When it is being shut down, the controller uses internal flash memory to store its program. Energy stored in the 1768 power supply maintains controller power long enough to store the program to internal flash memory, not the external CompactFlash card.

You can load the stored project from nonvolatile memory to the user memory of the controller:

- on every powerup.
- whenever there is no project in the controller and it powers up.
- anytime through RSLogix 5000 software.

IMPORTANT Nonvolatile memory stores the contents of the user memory at the time that you store the project.

- Changes that you make after you store the project are not reflected in nonvolatile memory.
- If you make changes to the project but do not store those changes, you overwrite them when you load the project from nonvolatile memory. If this occurs, you have to upload or download the project to go online.
- If you want to store changes such as online edits, tag values, or a ControlNet network schedule, store the project again after you make the changes.

ATTENTION: Do not remove the CompactFlash card while the controller is reading from or writing to the card, as indicated by a flashing green CF status indicator. This could corrupt the data on the card or in the controller, as well as corrupt the latest firmware in the controller. Leave the card in the controller until the CF status indicator turns solid green.

If a CompactFlash card is installed, you can view the contents of the card on the Nonvolatile Memory tab of the Controller Properties dialog box. If a safety application is stored on the card, the safety-lock status and the safety task signature are shown.

Figure 26 - Nonvolatile Memory Tab

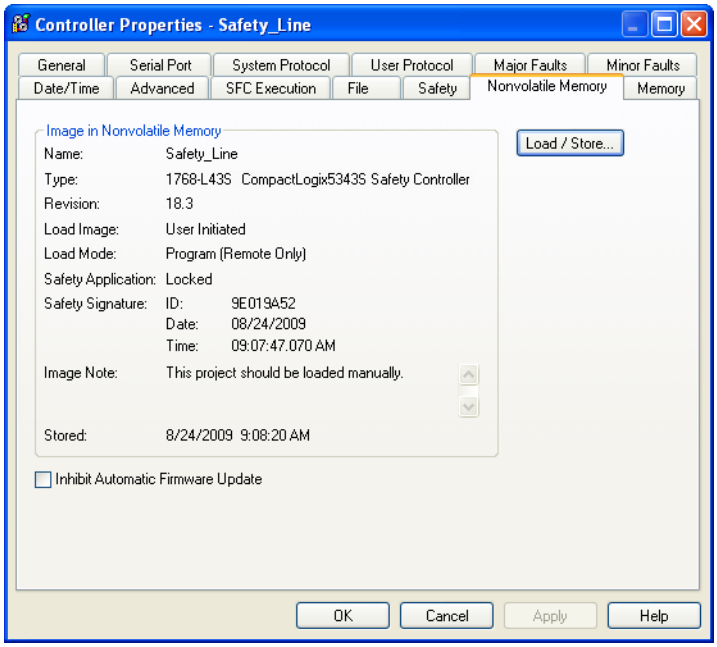

Storing a Safety Project

You cannot store a safety project if the safety task status is Safety Task Inoperable. When you store a safety project, controller firmware is saved to the CompactFlash card.

If no application exists in the controller, you can save just the firmware of the safety controller only if valid partnership exists. A firmware-only load will not clear a Safety Task Inoperable condition.

If a safety task signature exists when you store a project:

- safety tags are stored with the value they had when the signature was first created.
- standard tags are updated.
- the current safety task signature is saved.

When you store a safety application project on a CompactFlash card, we recommend you select Program (Remote Only) as the Load mode, that is, the mode the controller should enter following the load.

Table 35 - Additional Resources

Resource	Description
Major Safety Faults (Type 14) on page 99	Contains information on recovering from a Safety Task Inoperable fault
Logix5000 Controllers Controller Nonvolatile Memory Programming Manual, publication 1756-PM017	Provides more detailed information on storing, loading, and clearing projects from nonvolatile memory

Loading a Safety Project

You can only initiate a load from nonvolatile memory:

- if the controller type specified by the project stored in nonvolatile memory matches the controller type.
- if the major and minor revisions of the project in nonvolatile memory matches the major and minor revisions of the controller.
- if your controller is not in Run mode.

You have several options for when (under what conditions) to load a project into the user memory of the controller.

Table 36 - Options for Loading a Project

If you want to load the project	Then select	Notes
Whenever you turn on or cycle power	On Power Up	• During a power cycle, you lose any online changes, tag values, and network schedule that you have not stored in the nonvolatile memory. • The controller loads the stored project and firmware at every powerup regardless of the firmware or application on the controller. The load occurs whether or not the controller is safety-locked or has a safety task signature. • You can always use RSLogix 5000 software to load the project.
Whenever there is no project in the controller and you turn on or cycle power	On Corrupt Memory	• The controller updates the firmware on the controller, if required. The application stored in nonvolatile memory is also loaded and the controller enters the selected mode, either Program or Run. • You can always use RSLogix 5000 software to load the project.
Only through RSLogix 5000 software	User Initiated	• If the controller type as well as the major and minor revisions of the project in nonvolatile memory match the controller type and major and minor revisions of the controller, you can initiate a load, regardless of the Safety Task status. • Loading a project to a safety-locked controller is allowed only when the safety task signature of the project stored in nonvolatile memory matches the project on the controller. • If the signatures do not match or the controller is safety-locked without a safety task signature, you are prompted to first unlock the controller. **IMPORTANT:** When you unlock the controller and initiate a load from nonvolatile memory, the safety-lock status, passwords, and safety task signature are set to the values contained in nonvolatile memory once the load is complete. • If the firmware on the controller matches the revision in nonvolatile memory, the internal safety partner firmware is updated, if required, the application stored in nonvolatile memory is loaded so that the Safety Task status becomes Safety Task Operable and the controller enters the selected mode, either Program or Run.

For detailed information on using nonvolatile memory, refer to the Logix5000 Controllers Nonvolatile Memory Programming Manual, publication 1756-PM017.

Manage Firmware with Firmware Supervisor

Beginning with RSLogix 5000 software, version 18, you can use the Firmware Supervisor feature to manage firmware on Compact GuardLogix controllers. Firmware Supervisor lets controllers automatically flash update devices.

- Local and remote modules can be flashed while in Program or Run modes.
- Electronic keying must be configured for Exact Match.
- The firmware kit for the target device must reside on the controller's CompactFlash card.
- The device must support firmware upgrades via the ControlFlash utility.

Firmware Supervisor supports non-modular distributed I/O products that sit directly on the network without an adapter, including CIP Safety I/O modules on EtherNet/IP networks. CIP Safety I/O modules on DeviceNet networks and POINT Guard I/O modules are not yet supported.

Follow these steps to enable Firmware Supervisor.

1. On the Controller Properties dialog box, click the Nonvolatile Memory tab.
2. Click Load/Store.
3. From the Automatic Firmware Updates pull-down menu, choose Enable and Store Files to Image.

RSLogix 5000 software moves the firmware kits from your computer to the controller CompactFlash card for Firmware Supervisor to use.

TIP If you disable Firmware Supervisor, you disable only firmware supervisor updates. This does not include the controller firmware updates that occur when the controller image is reloaded from the CompactFlash card.

Controller Specifications

Introduction

Topic	Page
Certifications	109
General Specifications	110
Environmental Specifications	112
Environment and Enclosure Information	113
North American Hazardous Location Approval	113
European Hazardous Location Approval	114

Certifications

When marked, the components have the following certifications. See the Product Certification link at http://www.ab.com for current Declarations of Conformity, Certificates, and other certification details.

Certification	Description
Functional Safety(1)	Certified by TÜV: capable of SIL 1 to 3, according to IEC 61508, and PLe/Cat. 4 according to ISO 13849-1
Ex	European Union 94/9/EC ATEX Directive, compliant with: EN60079-15; Potentially Explosive Atmospheres, Protection 'n' II 3 G Ex nA IIC T4 X EN60079-0; General Requirements
c-UL-us	UL Listed Industrial Control Equipment, certified for US and Canada. See UL File E65584. UL Listed for Class I, Division 2 Group A,B,C,D Hazardous Locations, certified for U.S. and Canada. See UL File E194810.
CE	European Union 2004/108/EC EMC Directive, compliant with: • EN 61000-6-4; Industrial Emissions • EN 61326-1; Meas./Control/Lab., Industrial Requirements • EN 61000-6-2; Industrial Immunity • EN61131-2; Programmable Controllers (Clause 8, Zone A & B)
C-Tick	Australian Radiocommunications Act, compliant with: AS/NZS CISPR 11; Industrial Emissions

(1) When used with specified software versions and as described in the GuardLogix Controller Systems Safety Reference Manual, publication 1756-RM093.

General Specifications

Attribute	1768-L43S	1768-L45S
1768 backplane module support	2	4
Backplane current	1.4 A @ 24V	2.1 A @ 24V
1769 backplane current output	2.0 A @ 5.2V	2.0 A @ 5.2V
1768 backplane current output	2.8 A @ 5.2V	5.6 A @ 5.2V
Total 1768 and 1769 backplane current output	4.8 A @ 5.2V	7.6 A @ 5.2V
Power dissipation	7.5 W	9.5 W
Power consumption	33.6 W	50.4 W
Number of 1769-series I/O modules, max	16	30
Number of I/O banks, max	2	3
Number of 1768 modules available, max	2(2)	4(2)
Wiring category(1)	2 - on communication ports	
Mounting screw torque	1.16 N•m (10 lb•in), using M4 or #8 screws	
Dimensions (HxWxD), approx.	131.6 x 90 x 121.8 mm (5.18 x 3.55 x 4.80 in.)	
Weight, approx.	0.45 kg (15.9 oz)	

(1) Use this Conductor Category information for planning conductor routing. Refer to Industrial Automation Wiring and Grounding Guidelines, publication 1770-4.1.
(2) **Important:** You can have any combination of motion and network modules installed in a system. There is a maximum limit of two network modules that can be installed in a system. Network modules include: 1768-ENBT and 1768-CNB.

Figure 27 - 1768-L43S Power Dissipation

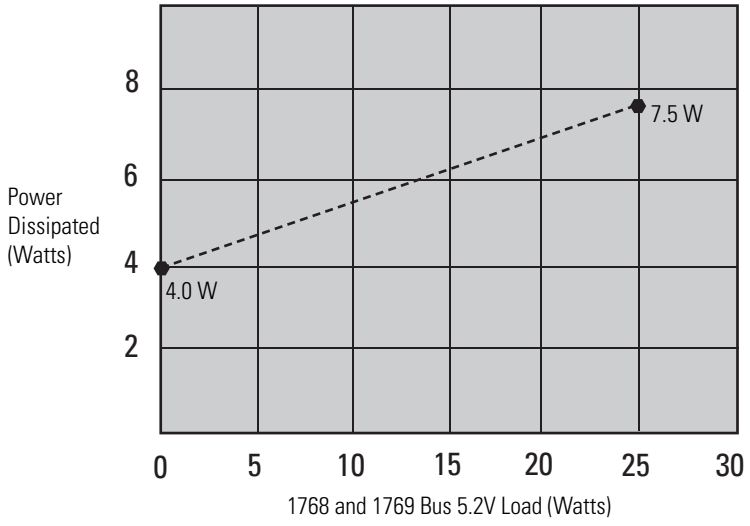

Figure 28 - 1768-L45S Power Dissipation

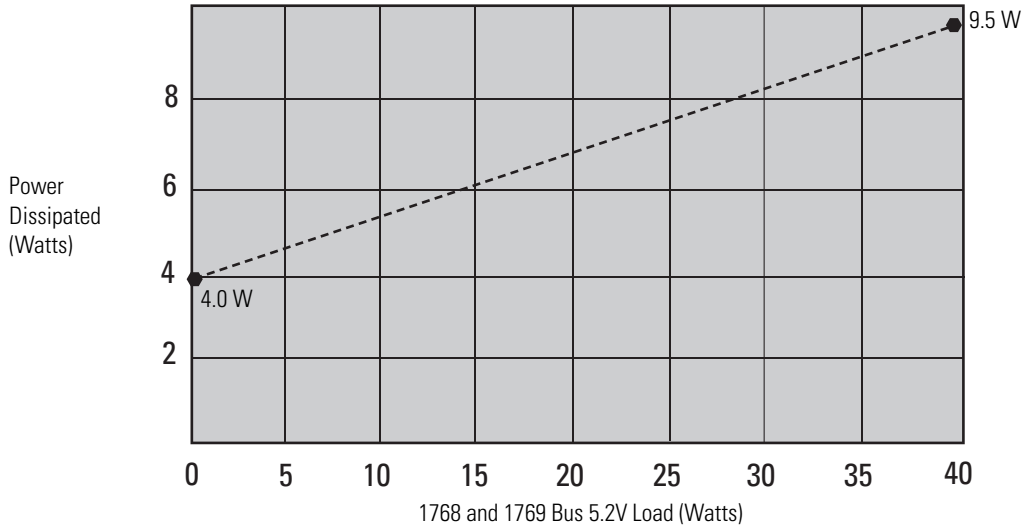

Safety Specifications

Functional Verification Test Interval	Probability of Failure on Demand (PFD)	Probability of Failure per Hour (PFH)	Safe Failure Fraction (SFF)
20 years	1.2E-05	2.1E-10	99.0%
15 years	8.8E-06	2.1E-10	
10 years	5.7E-06	2.0E-10	

Environmental Specifications

Attribute	1768-L43S, 1768-L45S
Temperature, operating	IEC 60068-2-1 (Test Ad, Operating Cold), IEC 60068-2-2 (Test Bd, Operating Dry Heat), IEC 60068-2-14 (Test Nb, Operating Thermal Shock): • 0…60 °C (32…140 °F)
Temperature, nonoperating	IEC 60068-2-1 (Test Ab, Unpackaged Nonoperating Cold), IEC 60068-2-2 (Test Bb, Unpackaged Nonoperating Dry Heat), IEC 60068-2-14 (Test Na, Unpackaged Nonoperating Thermal Shock): • -40…85 °C (-40…185 °F)
Relative humidity	IEC 60068-2-30 (Test Db, Unpackaged Nonoperating Damp Heat): 5…95% noncondensing
Vibration	IEC60068-2-6 (Test Fc, Operating): 5 g @ 10…500 Hz
Shock, operating	IEC60068-2-27 (Test Ea, Unpackaged Shock): 30 g
Shock, nonoperating	IEC60068-2-27 (Test Ea, Unpackaged Shock): 50 g
Emissions	CISPR 11: Group 1, Class A
ESD immunity	IEC 61000-4-2: • 6 kV contact discharges • 8 kV air discharges
Radiated RF immunity	IEC 61000-4-3: • 10V/m with 1 kHz sine-wave 80% AM from 80…2000 MHz • 10V/m with 200 Hz 50% Pulse 100% AM @ 900 MHz • 10V/m with 200 MHz 50% Pulse 100% AM @ 1890 MHz • 3V/m with 1 kHz sine-wave 80% AM from 2000…2700 MHz
EFT/B immunity	IEC 61000-4-4: • ±4 kV @ 5 kHz on communication ports
Surge transient immunity	IEC 61000-4-5: ±2 kV line-earth (CM) on shielded ports
Conducted RF immunity	IEC 61000-4-6: • 10V rms with 1 kHz sine-wave 80% AM from 150 kHz…80 MHz
Enclosure type rating	None (open-style)
Isolation voltage	30V (continuous), Functional Insulation Type, RS232 to system Type tested at 500V AC for 60 seconds
North American temperature code	T4
IEC temperature code	T4
Programming cable	1756-CP3 or 1747-CP3 serial cable category 3[(1)]

(1) See Industrial Automation Wiring and Grounding Guidelines, publication 1770-4.1.

Environment and Enclosure Information

Environment and Enclosure

This equipment is intended for use in a Pollution Degree 2 industrial environment, in overvoltage Category II applications (as defined in IEC 60664-1), at altitudes up to 2000 m (6562 ft) without derating.

This equipment is considered Group 1, Class A industrial equipment according to IEC/CISPR Publication 11. Without appropriate precautions, there may be difficulties with electromagnetic compatibility in residential and other environments due to conducted as well as radiated disturbances.

This equipment is supplied as open-type equipment. It must be mounted within an enclosure that is suitably designed for those specific environmental conditions that will be present and appropriately designed to prevent personal injury resulting from accessibility to live parts. The enclosure must have suitable flame-retardant properties to prevent or minimize the spread of flame, complying with a flame spread rating of 5VA, V2, V1, V0 (or equivalent) if non-metallic. The interior of the enclosure must be accessible only by the use of a tool. Subsequent sections of this publication may contain additional information regarding specific enclosure type ratings that are required to comply with certain product safety certifications.

In addition to this publication, see:

- Industrial Automation Wiring and Grounding Guidelines, for additional installation requirements, Rockwell Automation publication 1770-4.1.
- NEMA Standard 250 and IEC 60529, as applicable, for explanations of the degrees of protection provided by different types of enclosure.

North American Hazardous Location Approval

The following information applies when operating this equipment in hazardous locations.

Products marked CL I, DIV 2, GP A, B, C, D are suitable for use in Class I Division 2 Groups A, B, C, D, Hazardous Locations and nonhazardous locations only. Each product is supplied with markings on the rating nameplate indicating the hazardous location temperature code. When combining products within a system, the most adverse temperature code (lowest T number) may be used to help determine the overall temperature code of the system. Combinations of equipment in your system are subject to investigation by the local Authority Having Jurisdiction at the time of installation.

WARNING: EXPLOSION HAZARD

- Do not disconnect equipment unless power has been removed or the area is known to be nonhazardous.
- Do not disconnect connections to this equipment unless power has been removed or the area is known to be nonhazardous. Secure external connections that mate to this equipment by using screws, sliding latches, threaded connectors, or other means provided with this product.
- Substitution of components may impair suitability for Class I, Division 2.
- If this product contains batteries, they must be changed only in an area known to be nonhazardous.

European Hazardous Location Approval

Consider the following if you install a 1768-L43S or 1768-L45S controller in a European Zone 2 location.

European Zone 2 Certification
(The following applies when the product bears the EX marking.)

This equipment is intended for use in potentially explosive atmospheres as defined by European Union Directive 94/9/EC and has been found to comply with the Essential Health and Safety Requirements relating to the design and construction of Category 3 equipment intended for use in Zone 2 potentially explosive atmospheres, given in Annex II to this Directive.

Compliance with the Essential Health and Safety Requirements has been assured by compliance with EN 60079-15 and EN 60079-0.

- This equipment must be installed in an enclosure providing at least IP54 protection when applied in Zone 2 environments.
- This equipment shall be used within its specified ratings defined by Allen-Bradley.
- Provision shall be made to prevent the rated voltage from being exceeded by transient disturbances of more than 40% when applied in Zone 2 environments.
- This equipment is not resistant to sunlight or other sources of UV radiation.
- Secure any external connections that mate to this equipment by using screws, sliding latches, threaded connectors, or other means provided with this product.
- Do not disconnect equipment unless power has been removed or the area is known to be nonhazardous.

Change Controller Type in RSLogix 5000 Projects

Introduction

Topic	Page
Changing from a Standard to a Safety Controller	115
Changing from a Safety to a Standard Controller	116
Changing from a 1756 GuardLogix to a 1768 Compact GuardLogix Controller or Vice Versa	117

Because safety controllers have special requirements and do not support certain standard features, you must understand the behavior of the system when changing the controller type from standard to safety or from safety to standard in your RSLogix 5000 project. Changing controller type affects:

- supported features.
- physical configuration of the project, that is the safety partner and Safety I/O.
- controller properties.
- project components such as tasks, programs, routines, and tags.
- safety Add-on Instructions.

Changing from a Standard to a Safety Controller

Upon confirmation of a change from a standard controller to a safety controller project, safety components are created to meet the minimum requirements for a safety controller.

- The safety task is created only if the maximum number of downloadable tasks has not been reached. The safety task is initialized with its default values.
- Safety components are created (that is safety task, safety program, and so forth).
- A time-based safety network number (SNN) is generated for the local chassis.
- Standard controller features that are not supported by the safety controller, such as redundancy, are removed from the Controller Properties dialog box (if they existed).

Changing from a Safety to a Standard Controller

Upon confirmation of a change from a safety controller project to a standard controller, some components are changed and others are deleted, as described below.

- Safety I/O modules and their tags are deleted.
- The safety task, programs, and routines are changed to a standard task, programs, and routines.
- All safety tags, except safety consume tags, are changed to standard tags. Safety consume tags are deleted.
- Safety tag mappings are deleted.
- The safety network number (SNN) is deleted.
- Safety-lock and -unlock passwords are deleted.
- If the standard controller supports features that were not available to the safety controller, those new features are visible in the Controller Properties dialog box.

  TIP Peer safety controllers are not deleted, even if they have no connections remaining.

- Instructions may still reference modules that have been deleted and will produce verification errors.
- Consumed tags are deleted when the producing module is deleted.
- As a result of the above changes to the system, safety-specific instructions and Safety I/O tags will not verify.

If the safety controller project contains safety Add-On Instructions, you must remove them from the project or change their class to standard before changing the controller type.

Changing from a 1756 GuardLogix to a 1768 Compact GuardLogix Controller or Vice Versa

When you change from one safety controller type to another, the class of tags, routines, and programs remains unaltered. Any I/O modules that are no longer compatible with the target controller are deleted.

The representation of the safety partner is updated to appear appropriately for the target controller.

- The safety partner is created in slot *x* (primary slot + 1) when changing to a 1756 GuardLogix controller.
- When changing to a 1768 Compact GuardLogix controller, the safety partner is removed because it is internal to the Compact GuardLogix controller.

TIP A 1756 GuardLogix controller supports 100 safety programs in the safety task while a 1768 Compact GuardLogix controller supports 32.

Additional Resources

Refer to the Logix5000 Controllers Add-On Instructions Programming Manual, publication 1756-PM010 for more information on Add-On Instructions.

Notes:

Numerics

1747-CP3 cable 81
1756-CP3 cable 81
1784-CF128 105
1784-CF64 105

A

Add-On Instructions 116
address
CIP Safety I/O module 55
advanced connection reaction time 51
alias tags 65
automatic firmware updates 108

B

base tags 65

C

CE 109
certifications 109
Change Controller button 25
changing controllers 115-116
CIP Safety
definition 11
CIP Safety I/O
adding 47
configuration signature 53
monitor status 56
replacing 57-60
reset ownership 54
status data 56
CIP Safety protocol
definition 31
class 67
communication
ControlNet 41
DeviceNet network 44
EtherNet/IP 37
serial network 45
Compact GuardLogix controller 117
CompactFlash card 105, 106
CompactLogix
DeviceNet network 44
serial network DF1 modes 46
configuration ownership
identifying 54
resetting 54
configuration signature
components 53
copy 53
definition 53
configure always checkbox 26, 58, 60
connect
ControlNet 41
EtherNet/IP 37
connection
ControlNet 41
EtherNet/IP 38
connection status 97
constant value tag 68
consume tag data 70
consumed tag
description 65, 68
control and information protocol
definition 11
controller
configuration 23
fault handler 100
match 84
controller properties
general tab 24
major faults tab 85, 99
safety tab 77, 78, 85
controller properties dialog
major faults tab 99
controller-scoped tags 67
ControlNet
connection use 41
example configuration 42
overview 41
scheduled 42
unscheduled 42
ControlNet module
capabilities 41
create a project 23
C-Tick 109
c-UL-us 109

D

DeviceNet network 44
communication 44
configure driver 84
module capability 44
required interfaces 44
required software for communication 44
DeviceNet network example 45
diagnostic coverage
definition 11
download
effect of controller match 84
effect of firmware revision match 85
effect of safety status 85
effect of safety task signature 86
effect of safety-lock 86
process 87-88

E

enclosure 113
environment 113
EtherNet/IP network
configure driver 83, 84
connection use 38

connections 82
example configuration 38
module capability 37
overview 37
parameters 40
European norm.
Definition 11
external access 64, 68

F

fault
codes 99
non-recoverable controller faults 98
non-recoverable safety 98
recoverable fault 98
routines 99-102
firmware revision match 85
Firmware Supervisor 108

G

gateway 40
get system value (GSV)
accessibility 101
definition 11
go online
process 90

H

hazardous location approval
North America 113
HMI devices 15

I

IP address 40

L

load 107
Logix5000 controllers
DF1 modes 46

M

major faults tab 99
view controller faults 99
view safety status 85
max network delay
reset 73
minor faults tab 99
module properties
connection tab 54
safety tab 49, 53
morphing
See changing controllers.
multicast 11

N

network delay multiplier 52, 73
nonrecoverable safety faults
re-starting the safety task 98
nonvolatile memory 105-108

O

online bar 95
ownership
configuration 54
resetting 54

P

password
set 25
valid characters 25
peer safety controller
configuration 27
Performance Level
definition 11
probability of failure on demand (PFD)
definition 11
values 111
probability of failure per hour (PFH)
definition 11
values 111
produce a tag 69
produce and consume tags 37, 41
produced tag
description 65, 68
program fault routine 100
program-scoped tags 67
protecting the safety application 76-79
RSLogix Security 77
safety task signature 78
safety-lock 76

R

reaction time limit
CIP Safey I/O 49
requested packet interval
consumed tag 73
consumed tags 65
definition 11
DeviceNet Safety I/O 50
produced tag data 65
reset ownership 54, 57
restrictions
safety tag mapping 74
software 79
when safety signature exists 78
when safety-locked 76

RPI
see requested packet interval
RSLogix 5000
description 20
restrictions 79
RSLogix Security 77

S

safe failure fraction (SFF) 111
safe state 13
safety network number 31
assignment 31
automatic assignment 33
changing controller SNN 34
changing I/O SNN 34
copy and paste 36
copying and pasting 36
definition 11
description 14
formats 31
managing 31
manual 32
manual assignment 33
modification 33
time-based 32
safety projects
features not supported 20
safety status
effect on download 85
viewing 85, 95
safety tab
generate safety task signature 78
safety-lock controller 77
view safety status 85
safety tag mapping 75, 76
safety tags
controller-scoped 67
description 64
invalid data types 66
mapping 74-76
safety-program-scoped 67
safety task
execution 63
safety task signature
copy 78
delete 79
description 14
effect on download 86
effect on upload 85
generate 78
restricted operations 78
viewing 95
safety-lock 76
effect on download 86
effect on upload 85
icon 77
safety-unlock
icon 77
scheduled 42
serial
communication 45
network driver 83
serial network
communication 45
DF1 modes for Logix5000 controllers 46
serial port
configuration 45
connections 82
set system value (SSV)
accessibility 101
SNN
See safety network number
software restrictions 79
specifications
environmental 112
general 110
store 106
subnet mask 40

T

tags
alias 65
base 65
class 67
constant value 68
consumed 65, 68
controller-scoped 67
data type 66
external access 64, 68
overview 64
produced 65, 68
produced/consumed safety data 66, 67
program-scoped 67
Safety I/O 66, 67
scope 66
See also, safety tags.
terminology
used throughout manual 11
time synchronization 26
timeout multiplier 51, 73

U

unicast 11, 68, 70
unscheduled 42
upload
effect of controller match 84
effect of safety task signature 85
effect of safety-lock 85
process 89

Rockwell Automation Support

Rockwell Automation provides technical information on the Web to assist you in using its products.
At http://www.rockwellautomation.com/support/, you can find technical manuals, a knowledge base of FAQs, technical and application notes, sample code and links to software service packs, and a MySupport feature that you can customize to make the best use of these tools.

For an additional level of technical phone support for installation, configuration, and troubleshooting, we offer TechConnect support programs. For more information, contact your local distributor or Rockwell Automation representative, or visit http://www.rockwellautomation.com/support/.

Installation Assistance

If you experience a problem within the first 24 hours of installation, review the information that is contained in this manual. You can contact Customer Support for initial help in getting your product up and running.

United States or Canada	1.440.646.3434
Outside United States or Canada	Use the Worldwide Locator at http://www.rockwellautomation.com/support/americas/phone_en.html, or contact your local Rockwell Automation representative.

New Product Satisfaction Return

Rockwell Automation tests all of its products to ensure that they are fully operational when shipped from the manufacturing facility. However, if your product is not functioning and needs to be returned, follow these procedures.

United States	Contact your distributor. You must provide a Customer Support case number (call the phone number above to obtain one) to your distributor to complete the return process.
Outside United States	Please contact your local Rockwell Automation representative for the return procedure.

Documentation Feedback

Your comments will help us serve your documentation needs better. If you have any suggestions on how to improve this document, complete this form, publication RA-DU002, available at http://www.rockwellautomation.com/literature/.

Rockwell Otomasyon Ticaret A.Ş., Kar Plaza İş Merkezi E Blok Kat:6 34752 İçerenköy, İstanbul, Tel: +90 (216) 5698400

www.rockwellautomation.com

Power, Control and Information Solutions Headquarters

Americas: Rockwell Automation, 1201 South Second Street, Milwaukee, WI 53204-2496 USA, Tel: (1) 414.382.2000, Fax: (1) 414.382.4444
Europe/Middle East/Africa: Rockwell Automation NV, Pegasus Park, De Kleetlaan 12a, 1831 Diegem, Belgium, Tel: (32) 2 663 0600, Fax: (32) 2 663 0640
Asia Pacific: Rockwell Automation, Level 14, Core F, Cyberport 3, 100 Cyberport Road, Hong Kong, Tel: (852) 2887 4788, Fax: (852) 2508 1846

Publication 1768-UM002B-EN-P - August 2010
Supersedes Publication 1768-UM002A-EN-P - February 2010
Copyright © 2010 Rockwell Automation, Inc. All rights reserved. Printed in the U.S.A.

Raven X

Quick Start Guide

for Verizon

SIERRA WIRELESS

20070914
Rev 1.0

Activating your Raven X on the Verizon Network

- Automatic Activation
- Setup Wizard
- Hardware Installation
- Indicator Lights
- Mounting

This Quick Start guide provides step-by-step directions for activating your Raven X on Verizon's network.

Tip: *For additional configuration options, refer to the User Guide for your Raven X.*

Automatic Activation

One of the special features of your Raven X for Verizon is the ability to activate itself automatically. When you first power on the Raven X, it will check to see if it has been activated with account data. If it finds that it has not yet been activated, the Raven X will attempt to retrieve the account data from the Verizon network using Over-the-Air Service Provisioning (OTASP).

Caution: *You need to have an account with Verizon before you attempt automatic activation. If you have not ordered an account from Verizon for your Raven X, it will not succeed at activating.*

a. Attach the antenna to your Raven X.

b. Plug the Raven X into power.

c. While the LED lights cycle from the outside to the inside, the Raven X is attempting to download its account information. The download process may take about a minute or two.

Caution: *Do not move your Raven X while it is being programmed.*

d. When the Network lights illuminate, your Raven X has successfully completed OTASP and is registered on the Verizon network.

e. If you need to update the ALEOS firmware, change the account information, install the Dial-Up Networking driver, or want to test the account settings of your Raven X, follow the directions below to use the Setup Wizard. Otherwise, skip the Wizard steps and go to the Hardware Installation section.

Setup Wizard

You can find the Setup Wizard installation on the CD which came with your Raven X or on the Sierra Wireless website: http://www.sierrawireless.com/support/AirLink/default.aspx.Use only the Setup Wizard for Verizon for best results.

Note: The Setup Wizard requires the Microsoft .NET framework v. 1.1 and Microsoft Windows 98, Windows 2000, Windows XP, or later. You can obtain .NET from Microsoft: http://www.microsoft.com.

Note: If you are setting modem for circuit switched mode, pelase test your connection to ensure your network account has been set up correctly.

1. Wizard: Starting the Setup Wizard

a. Connect the Raven X to your computer using an Ethernet cable or a serial cable USB cable.

b. Connect the power adapter and antenna to your Raven X.

c. Install the Setup Wizard by running VerizonSetupWizard.exe and follow the prompts.

d. Run the Setup Wizard from the Windows Start menu.

Start>All Programs>AirLink Communications>Setup Wizard>Setup Wizard

Figure 0-1: Setup Wizard

e. Click *Next* to start the Wizard process.

If you connected your Raven X to the port on your computer, select *Connected to an Ethernet/USB Port* and use the drop down menu to select the Ethernet adapter or USB/net connectionon your computer to which the modem is connected (most computers only have one adapter which will be selected for you). The default password for the modem is entered for you. Click *Next*.

Note: If you want to use USB with the Setup Wizard you will need to first install the driver, refer to Installing the USB driver section in this Chapter.

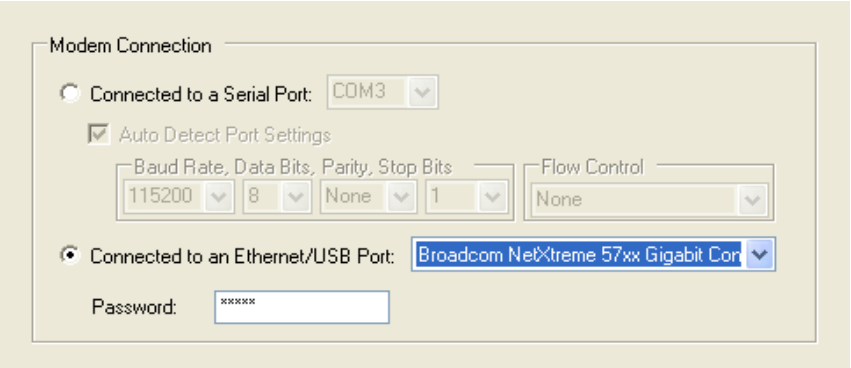

Figure 0-2: Setup Wizard : Ethernet Connection/USB Connection

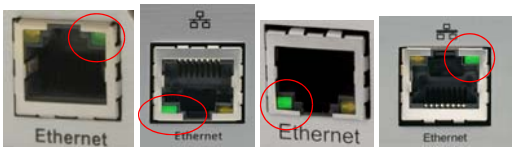

Figure 0-3: Ethernet Port

Tip: *If the Setup Wizard is unable to detect the Raven X, check the green link LED on the Ethernet port of the modem to see if it is lit to indicate an Ethernet connection with your computer. If you do not see this light or if your computer shows a "Network Cable Unplugged" message or icon, try a different Ethernet cable.*

OR

If you connected your Raven X to the serial port on your computer, select *Connected to a Serial Port*, check Auto Detect Port Settings or select the port from the drop down menu. Click *Next*.

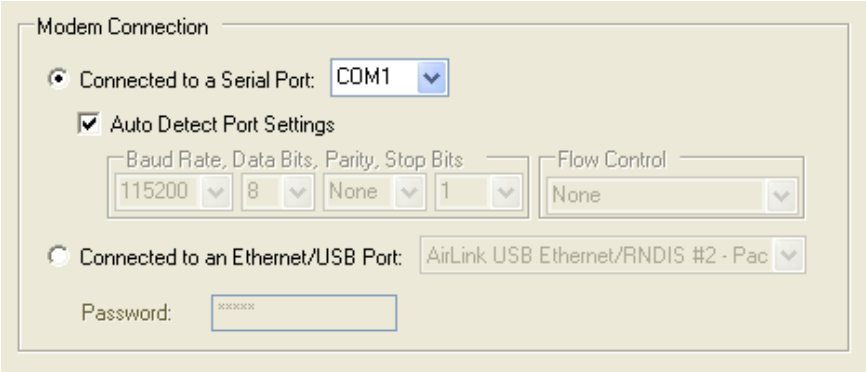

Figure 0-4: Setup Wizard : Serial Connection

Note: You cannot activate with serial and would need USB/net to use set up wizard.

After the Setup Wizard connects to your Raven X, the details for your specific model will be displayed. If the incorrect model is displayed, your Raven X so the Wizard can attempt to connect again. Click *Next*.

After the Wizard detects your Raven X, you will be offered a menu of Setup tasks. Choose the tasks you need from those displayed.

Figure 0-5: Setup Wizard : Task Menu

- **Update ALEOS Firmware:** Check the Sierra Wireless server for the latest ALEOS firmware.

- **Activate Modem:** Configure your Raven X to connect on the Verizon network.
- **Test Modem Setup:** Verify your Raven X is properly configured and connecting on the Verizon network.
- **Setup a DUN Connection:** Create a Dial-Up Networking entry for local connection. This part of the setup is only needed if you will be using your Raven X to connect directly from a computer to the Internet or other network.

Click *Next* when you have selected your desired options.

Note: Based on your selections, you may not need to do all of the following Wizard steps.

Note: Follow this step, only if Update Aleos option has been selected in the task menu checkbox

On occasion, Sierra Wireless releases updates to the firmware for your modem. These updates can include new features as well as bug fixes. To make sure your modem is at optimal performance, it is recommended to *Check for Updates* and *Update Now* if an update is found.

Note: While checking for ALEOS Firmware updates, the Setup Wizard uses the Internet connection on your computer to connect to the Sierra Wireless server. Your Raven X is not connected to the wireless network for this process. If you are using Ethernet to activate your Product Name and need to remove the Ethernet cable from your modem to connect to your usual Internet connection to Check for Updates*, be sure to reconnect the Raven X before you select* Update Now*.*

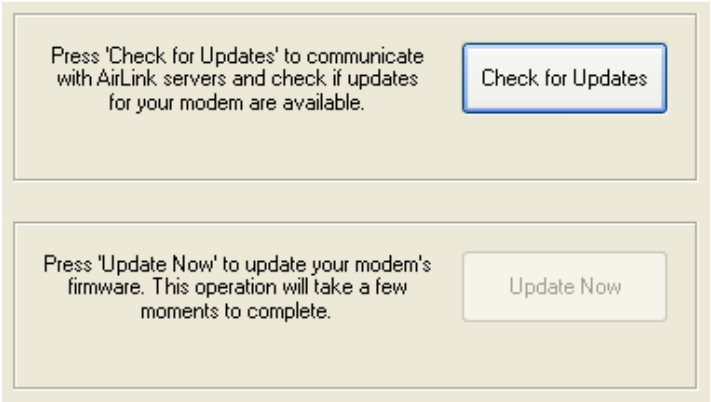

Figure 0-6: ALEOS Update

Tip: *You can download current ALEOS firmware from the Sierra Wireless web site and install it separately.*

Click *Next* when you are finished updating or if you choose not to update.

The steps and data required to activate your Raven X on the Verizon network varies depending on the model.

The Wizard will check the signal strength of your Raven X (RSSI). Click Next to begin the activation process.

Note: The process may take a few minutes. Progress information will display across the bottom.

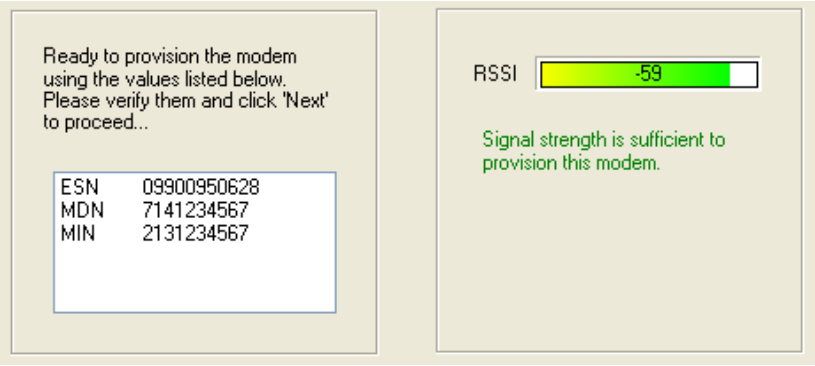

Figure 0-7: Setup Wizard : Signal Test

Tip: *If you have low signal, you may encounter difficulties activating your modem. Try a different location or a different antenna to increase your signal if it is -90 or lower (yellow to red bar).*

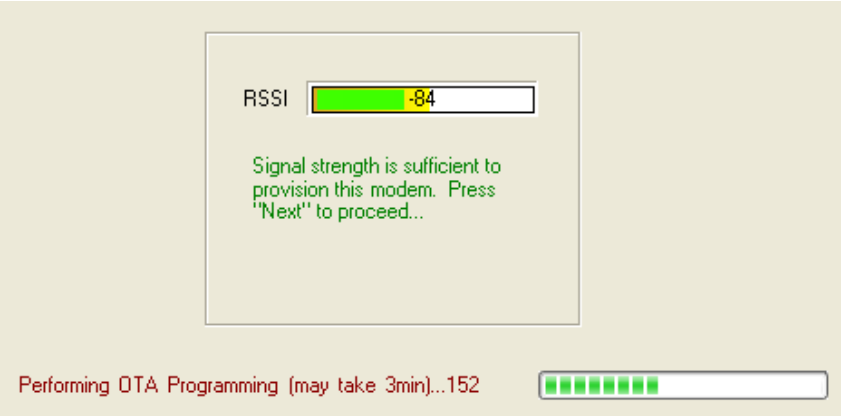

Figure 0-8: Setup Wizard: OTASP screen

Tip: *The Raven X will get all of its account data from the next work while doing an over the air activation (OTASP).*

Your connection of your Raven X to the Internet is tested using the Verizon cellular network.

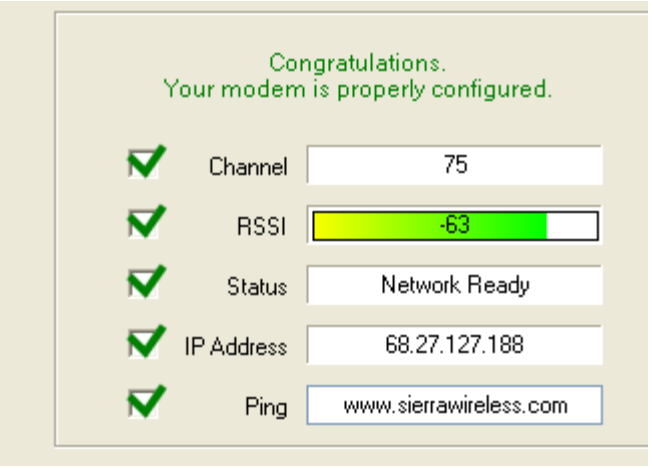

Figure 0-9: Setup Wizard: Connection Test

Green checks in the boxes indicate the tests were successful and your Raven X is functioning properly. At this point your modem is configured and activated to work on the Verizon network.

*Note: These tests, depending on the strength of your signal, may take a few minutes. Initially, while the tests are being performed, there may be red **X**s in the boxes. The Status line will give an indication of the progress of the connection process.*

If Test Modem Settings shows the status of your modem is “Data Connection Failed - Waiting for Retry”, “No Service”, “No Carrier”, “Network Negotiation Failed”, “Network Authentication Failed”, “Modem Not Registered”, or the Reg Net light on the modem is not lit, double-check your device activation information and return to the Activate Modem step to reconfigure your Raven X.

Private Networking Data Link is a special account configuration that provides a more secure connection for your Raven X and often provides a static IP with authentication on an exclusive server. Consult your Verizon representative for details about Private Networking Data Link if it’s something you need for your account.

Before you start the configuration for Private Networking, Data Link, the connection to the network may be checked.

Caution: *Ensure the Raven X has been activated before you proceed with the Private Networking Data Link steps. Configuring Private Networking Data Link before the Raven X has been activated can prevent successful activation.*

- The Primary Home Agent (**Primary HA**) and Secondary Home Agent (**Secondary HA**) are the network servers responsible for IP addressing and routing. Fill in the information, as applicable.

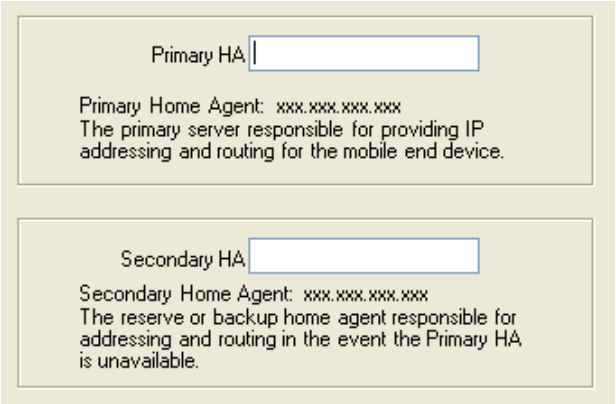

Figure 0-10: Setup Wizard : Primary and Secondardy HA

- **HA Shared Secret Password** is used for both Home Agent's. This may be filled in for you with a password created for your Raven X for the Verizon network.
- The **AAA/Vision Password** is required by the Authentication, Authorization and Accounting server. This may be filled in for you with default for Verizon.

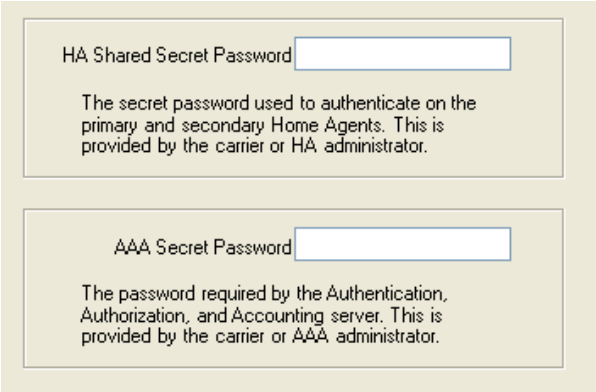

Figure 0-11: Setup Wizard : Passwords

When the Private Networking Data Link configuration is completed, the connection to the network will be tested again.

Note: Using DUN, the speed of the connection is the limited to the connection between the modem and the computer. This may be less than the total bandwidth available with EV-DO HSDPA.

Dial-up Networking (DUN) allows a computer or other device to use the serial port on a Raven X to connect to the Internet or private network just like an analog modem using a standard phone line. The Setup Wizard will install a driver for the Raven X and set up the connection between your computer and the Raven X. You will need to have administrator access on the computer for this section of the installation.

If you already have other modems installed on your computer, they will be listed on the Sierra Wireless AirLink Modem Installation screen. If you have other modems installed on your computer using the same serial port, they may conflict. As long as you do not intend to use them, you can Remove other modems using this menu.

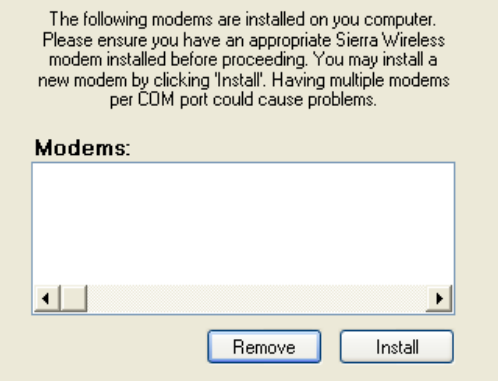

Figure 0-12: Setup Wizard : DUN driver

a. Select *Install* to begin adding the driver for the Raven X to your computer.

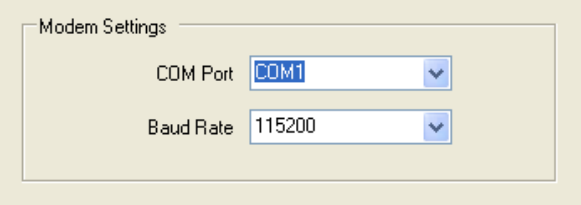

Figure 0-13: Setup Wizard : DUN settings

b. The COM port and speed should match the settings of the Raven X and where it will be connected (default settings will be pre-entered).

c. Select *Next* to begin the driver installation.

d. You will see a confirmation box from Microsoft Windows to specify if you wish to install this driver on your computer. Select *Continue Anyway* to install the driver.

e. When the driver is installed, you will return to the Modem installation screen. The Raven X should now be listed (in addition to any other modem installed on your computer).

f. Click *Next* to continue to install the DUN configuration.

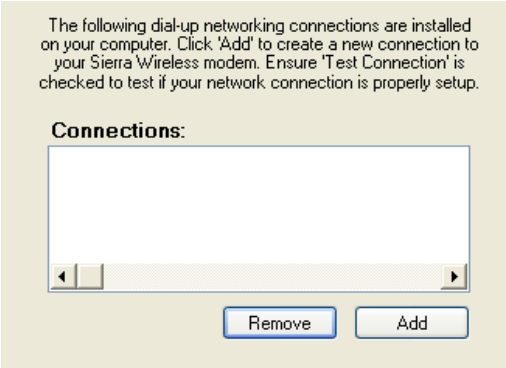

Figure 0-14: Setup Wizard : DUN connections

If you already have a DUN connection installed for a different modem, it will be listed on the Dial-up Networking Connection screen.

g. Select *Add* to create a new connection for the Raven X.

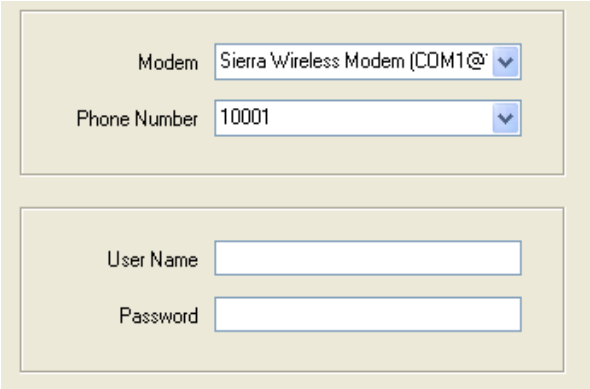

Figure 0-15: Setup Wizard : DUN settings

h. From the drop down menu, select *Sierra Wireless modem*.

i. The defaults for the phone number, user name and password will already be entered.

j. Select *Next* to begin the install.

Figure 0-16: Setup Wizard : DUN

At the completion of the DUN installation, you will return to the Dial-up Networking Connection screen. The AirLink modem should now be listed as a connection.

Your modem is now ready to be used as a DUN device for any applications on your computer needing a network connection. If you have DUN installed for more than one modem, you will need to specify in your application which DUN to use. Unless it is the only DUN, your Raven X may not be the one your computer sees as a default.

Hardware Installation

Note: During installation, please be sure that the cables are secure but do not bear any additional weight that could loosen the connector from the unit.

Your Raven X should be mounted in a position that allows easy access for the cables so they are not bent, constricted, in close proximity to high amperage, or exposed to extreme temperatures. The LEDs on the front panel should be visible for ease of operational verification. You should ensure that there is adequate airflow around the modem but that it is kept free from direct exposure to the elements, such as sun, rain, dust, etc.

Caution: *The Raven X is in a hardened case and designed for use in industrial and extreme environments. However, unless you are using cables expressly designed for such environments, they can fail if exposed to the same conditions the Raven X can withstand.*

Figure 0-17: Raven X Connectors

Cellular

Note: This device is not intended for use within close proximity of the human body. Antenna installation should provide for at least a 20 CM separation from the operator.

Antennas selected should not exceed a maximum gain of 5 dBi under standard installation configuration. In more complex installations (such as those requiring long lengths of cable and/or multiple connections), it's imperative that the installer follow maximum dBi gain guidelines in accordance with the radio communications regulations of the Federal Communications Commission (FCC), Industry Canada, or your country's regulatory body (if used outside the US).

Your Raven X will work with most cellular antennas with a SMA connector. Connect the primary antenna or primary RF cable directly to the antenna connector on the back of the Raven X.

Tip: *When using a cable to an antenna placed away from the modem, minimize the length of your cable. All gain from a more advantageous antenna placement can be lost with a long cable to the modem.*

Note: Use of receive diversity for EV-DO is optional. Data transmission and reception may be adversely affected if it is not used.

To provide for diversity in the signal reception, connect the second antenna to the second antenna port (SMA, labeled Rx Div) on the back of the Raven X.

Caution: *If you are not using a diversity antenna, you should disable the receive diversity option. In Ace Manager in the 1x/EV-DO group, configure *EVDODIVERSITY.*

Power

Warning: ***Risk of electric shock:*** *Only use the supply voltages listed in this user guide.*

Warning: *When using AC to DC adapter the ambient temperature should not exceed 40 ^{0}C.*

Your Raven X can be used with either DC or AC, with the appropriate power adapter. DC cables and AC adapters are available as optional accessories in addition to the one included with your Raven X.

The DC power cable positive lead should be connected to the battery or power source positive terminal. The power cable negative lead should be connected to the battery or power source negative terminal.

Tip: *The DC power cable has a white wire lead in addition to the power positive and negative. This is for a feature not present in the Raven line modems. In the Raven X, the white wire lead has no function and can be ignored.*

Warning: *Explosion Hazard - Do not disconnect equipment unless power has been switched off or the area is known to be non-hazardous.*

Connecting to a Computer or other Device

Figure 0-18: Ethernet

The Ethernet port of your Raven X can be connected directly to a computer or other Ethernet device with either a cross-over cable or a straight-through cable. The Ethernet port on the Raven X is auto-sensing and will auto-detect the speed of the connecting device for 100baseTX or 10baseT. If you are connecting the modem to a hub or switch you should use a straight through cable or use the uplink port on the hub or switch with a cross-over cable.

Figure 0-19: Serial

The serial port of your Raven X can be connected directly to most computers or other devices using a standard straight through cable. If you have a DCE device, you will need a null modem or null modem cable.

Indicator Lights

When solid, Raven X indicates a successful connection. When your Raven X is connected to power and an antenna, there is a specific pattern to the lights to indicate its operation mode.

Figure 0-20: Raven X Indicator lights

- **Network** - Indicates a successful connection to the cellular network with an IP address given and a channel acquired.
- **Signal** - Light shows the strength of the signal and may be nearly solid (strong signal) or flashing (weaker signal). A slow flash indicates a very weak signal.

RSSI LED Ranges

RSSI/Signal LED Status	Ranges of RSSI (dBm)
On Solid	Equal to or stronger than -69
Fast Blink	-70 to -79
Normal blink	-80 to -89
Slow Blink	-90 to -99
Extinguished	Equal to or weaker than -100

- **Activity** - Lights will flash as data is transferred to and from the PinPoint modem on the remote network.
- **Service** - Indicates when the connection is EV-DO. Unlit indicates 1x.
- **Power** - Indicates the power adapter is connected and there is power getting to the Raven X.
- The **Reset button** (on the left side of the Raven X) has two functions. If it is quickly depressed and released, the modem will simply power cycle the internal hardware. If, however, the reset is depressed and held for several seconds (count 10 slowly, and wait for the power light to go off after the light pattern stops), the ALEOS configuration settings will return to the factory defaults.

Caution: *If you reset the modem configuration using the reset button, you may need to reactivate your Raven X with Verizon.*

Light Patterns

The LEDs on the front of the modem will respond in different patterns to indicate modem states.

- **Normal** - Each LED, mentioned above, is lit as applicable.
- **Start up** - The LEDs will cycle from left to right.
- **PassThru mode** - Network and Signal LEDs will blink in tandem. The Activity LED will blink when transmitting or receiving data.
- **SOS** - The Network and Service Err or Service LEDs will blink alternate to each other.
- **Configuration Reset** - The LEDs will cycle left to right and then right to left 4 times.
- **Authentication Failure** - The Network, Signal, and Activity LEDs blink every 2 seconds.
- **Data Retry** - The Network, Signal, and Activity LEDs blink every 3 seconds.
- **Invalid MAC Address or Ethernet Initiation Fail** - The Service LED will blink.

Mounting

The integrated mounting with keyhole screw mounts on the Raven X will allow you to secure your modem nearly anywhere, quickly and easily, without the need for a separate bracket.

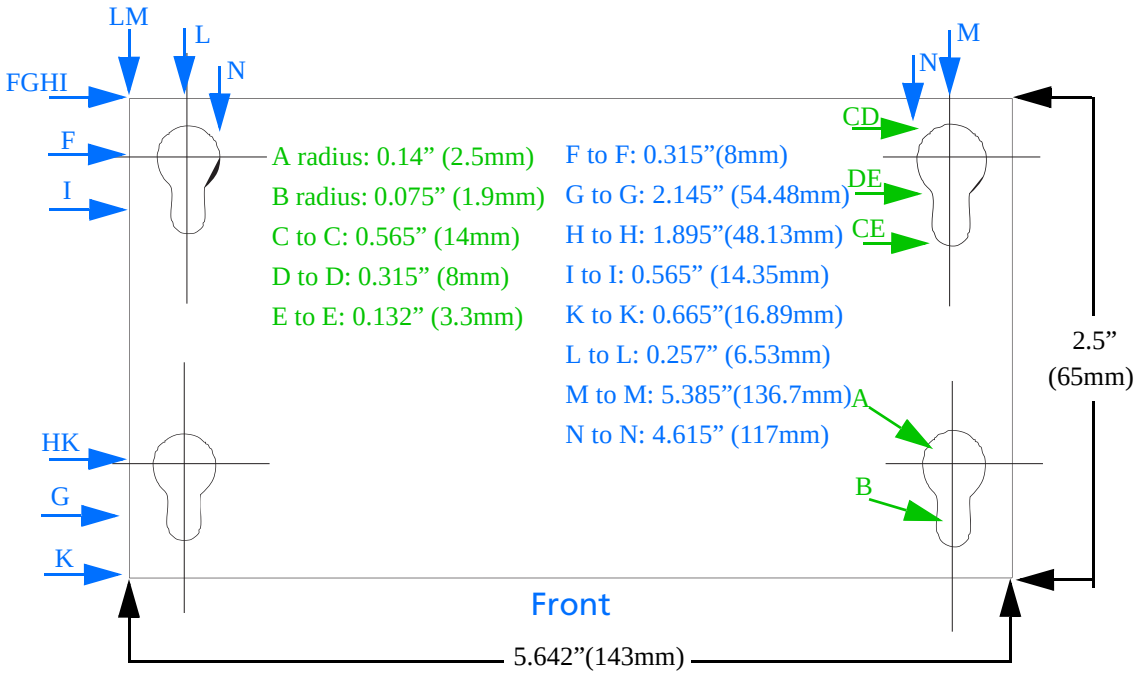

Figure 0-21: Diagram of the Raven X base

SIERRA
WIRELESS

Raven X for Verizon

User Guide

SIERRA WIRELESS

20070914
Rev 2.0

Important Notice

Due to the nature of wireless communications, transmission and reception of data can never be guaranteed. Data may be delayed, corrupted (i.e., have errors) or be totally lost. Although significant delays or losses of data are rare when wireless devices such as the Sierra Wireless AirLink Raven X are used in a normal manner with a well-constructed network, the Sierra Wireless AirLink Raven X should not be used in situations where failure to transmit or receive data could result in damage of any kind to the user or any other party, including but not limited to personal injury, death, or loss of property. Sierra Wireless accepts no responsibility for damages of any kind resulting from delays or errors in data transmitted or received using the Sierra Wireless AirLink Raven X, or for failure of the Sierra Wireless AirLink Raven X to transmit or receive such data.

Safety and Hazards

Do not operate the Sierra Wireless AirLink Raven X in areas where blasting is in progress, where explosive atmospheres may be present, near medical equipment, near life support equipment, or any equipment which may be susceptible to any form of radio interference. In such areas, the Sierra Wireless AirLink Raven X **MUST BE POWERED OFF**. The Sierra Wireless AirLink Raven X can transmit signals that could interfere with this equipment.

Do not operate the Sierra Wireless AirLink Raven X in any aircraft, whether the aircraft is on the ground or in flight. In aircraft, the Sierra Wireless AirLink Raven X **MUST BE POWERED OFF**. When operating, the Sierra Wireless AirLink Raven X can transmit signals that could interfere with various onboard systems.

Note: Some airlines may permit the use of cellular phones while the aircraft is on the ground and the door is open. Sierra Wireless AirLink Raven X may be used at this time.

The driver or operator of any vehicle should not operate the Sierra Wireless AirLink Raven X while in control of a vehicle. Doing so will detract from the driver or operator's control and operation of that vehicle. In some states and provinces, operating such communications devices while in control of a vehicle is an offence.

Limitation of Liability

The information in this manual is subject to change without notice and does not represent a commitment on the part of Sierra Wireless. SIERRA WIRELESS AND ITS AFFILIATES SPECIFICALLY DISCLAIM LIABILITY FOR ANY AND ALL DIRECT, INDIRECT, SPECIAL, GENERAL, INCIDENTAL, CONSEQUENTIAL, PUNITIVE OR EXEMPLARY DAMAGES INCLUDING, BUT NOT LIMITED TO, LOSS OF PROFITS OR REVENUE OR ANTICIPATED PROFITS OR REVENUE ARISING OUT OF THE USE OR INABILITY TO USE ANY SIERRA WIRELESS PRODUCT, EVEN IF SIERRA WIRELESS AND/OR ITS AFFILIATES HAS BEEN ADVISED OF THE POSSIBILITY OF SUCH DAMAGES OR THEY ARE FORESEEABLE OR FOR CLAIMS BY ANY THIRD PARTY.

Notwithstanding the foregoing, in no event shall Sierra Wireless and/or its affiliates aggregate liability arising under or in connection with the Sierra Wireless product, regardless of the number of events, occurrences, or claims giving rise to liability, be in excess of the price paid by the purchaser for the Sierra Wireless product.

Patents

Portions of this product may be covered by some or all of the following US patents:

5,515,013	5,629,960	5,845,216	5,847,553	5,878,2345,890,0575,929,8156,169,884
6,191,741	6,199,168	6,339,405	6,359,591	6,400,3366,516,2046,561,8516,643,501
6,653,979	6,697,030	6,785,830	6,845,249	6,847,8306,876,6976,879,5856,886,049
6,968,171	6,985,757	7,023,878	7,053,843	7,106,5697,145,2677,200,512D442,170
D459,303				

and other patents pending.

This product includes technology licensed from: QUALCOMM® 3G

Licensed by QUALCOMM Incorporated under one or more of the following United States patents and/or their counterparts in other nations:

4,901,307	5,056,109	5,101,501	5,109,390	5,228,0545,267,2615,267,2625,337,338
5,414,796	5,416,797	5,490,165	5,504,773	5,506,8655,511,0735,535,2395,544,196
5,568,483	5,600,754	5,657,420	5,659,569	5,710,7845,778,338

Manufactured or sold by Sierra Wireless or its licensees under one or more patents licensed from InterDigital Group.

Copyright

© 2010 Sierra Wireless. All rights reserved.

Trademarks

AirCard® and “Heart of the Wireless Machine®” are registered trademarks of Sierra Wireless. Watcher® is a trademark of Sierra Wireless, registered in the European Community. AirLink™ and AceWare™ are trademarks of Sierra Wireless.
Sierra Wireless, the Sierra Wireless logo, the red wave design, and the red-tipped antenna are trademarks of Sierra Wireless.

Windows® is a registered trademark of Microsoft Corporation.

QUALCOMM® is a registered trademark of QUALCOMM Incorporated. Used under license.

Other trademarks are the property of the respective owners.

Contact Information

Support Desk:	Phone:	1-877-231-1144
	Hours:	5:00 AM to 5:00 PM Pacific Time, Monday to Friday, except US Holidays
	E-mail:	support@sierrawireless.com
Sales Desk:	Phone:	1-510-624-4200 1-604-232-1488
	Hours:	8:00 AM to 5:00 PM Pacific Time
	E-mail:	MobileandM2Msales@sierrawireless.com

Post:	Sierra Wireless America 39677 Eureka Drive Newark, CA USA 94560 Sierra Wireless 13811 Wireless Way Richmond, BC Canada V6V 3A4
Fax:	1-510-624-4299 1-604-231-1109
Web:	www.sierrawireless.com

Consult our website for up-to-date product descriptions, documentation, application notes, firmware upgrades, troubleshooting tips, and press releases:

www.sierrawireless.com

Revision History

Revision number	Release date	Changes
1.x	Q2: 2009	Guide updated with ALEOS Release 4.0 content.
2.x	Q1: 2010	User Guide rebranded to current corporate standards.

Contents

Introduction to the Raven X 1
ACEmanager 2
Simplified Deployment. 3
Monitor and Control. 3
ACEview 3
Modem Doctor 4
Connecting to Verizon 4
Steps of a connection:. 4
Dynamic vs. Static IP Addresses 5
EV-DO 6
Security 6
Connection methods 6
USB 6
Virtual serial port 7
Networking 7
IPSec 7
GRE 8
Applications 8
Events Reporting 8
Software 8
Documentation 9
Tools and Reference Documents 9

Specifications 11
Features and Benefits 11
Technology 11
Bands 11
Environmental 11
Power Consumption: (@12V DC) 11
Standards/Approvals 12
Host Interfaces 12
Dimensions 12
Application Interfaces 12
LED Indicators. 12

Interface Port Pin-Outs 13
Serial Port 13
Power Connector 13

Activating your Raven X on the Verizon Network 15
Automatic Activation 15
Setup Wizard 16
Activating Using AT Commands 24

Hardware Installation of the Raven X 27
Connecting to a Computer or other Device 28
Indicator Lights 29
Light Patterns 30
Mounting 31

Regulatory Information 33
Federal Communications Commission Notice (FCC United States) 33
Industry Canada 33
Antenna Considerations 34
RF Exposure 34
EU 34
WEEE Notice 35

1: Introduction to the Raven X

1

- Connecting to Verizon
- EV-DO
- Connection methods
- Networking
- Applications
- Software
- Documentation

The Raven X is equipped with a robust ARM9 processor and embedded ALEOS™ technology to optimize performance on today's high speed data networks. The high-speed interface and 3G-optimized architecture make the Raven X ideal for various commercial mobile or portable network connectivity applications. Embedded machine protocols make it equally suited for remote industrial and M2M deployments.

Key applications for the Raven X include wireless networking, retail/POS, vending/kiosks, multimedia and remote monitoring and control.

Figure 1-1: Sierra Wireless AirLink Raven X

ALEOS, the embedded core technology of the Sierra Wireless AirLink products simplifies installation, operation and maintenance of any solution, and provides an always-on, always-aware intelligent connection for mission-critical applications. ALEOS enables:

- Persistent Network Connectivity
- Over-The-Air (OTA) Upgrades
- Wireless Optimized TCP/IP
- Real-Time Notification
- Extensive Machine Protocols
- Packet Level Diagnostics
- Device Management & Control
- Protocol Spoofing

Figure 1-2: Powered by ALEOS

A wireless solution is not complete until you have software tools to manage the devices monitoring your valuable equipment. Using the AirLink Control Environment (ACE), ACEWare is the device management and monitoring application suite for Sierra Wireless AirLink devices powered by ALEOS.

Figure 1-3: ACEware Logo

The ACEware suite encompasses an application internal to the firmware (ACEmanager), Windows-based applications (ACEview and Modem Doctor), and a web-hosted application (ACEnet). You can download the applications and their user guides from the Sierra Wireless AirLink Solutions web site: http://www.sierrawireless.com/support. Contact your dealer or Sierra Wireless representative for any further information.

Note: ACEview requires the Microsoft .NET Framework v. 2.0 and Microsoft Windows 98, Windows 2000, Windows XP, or later. You can obtain the Microsoft .NET Framework from Microsoft at: http://www.microsoft.com/.

ACEmanager

ACEmanager, the AceWare remote configuration and monitoring tool, simplifies deployment and provides extensive monitoring, control and management capabilities. ACEmanager gives you the power to monitor and control your Sierra Wireless AirLink communications platforms in real-time.

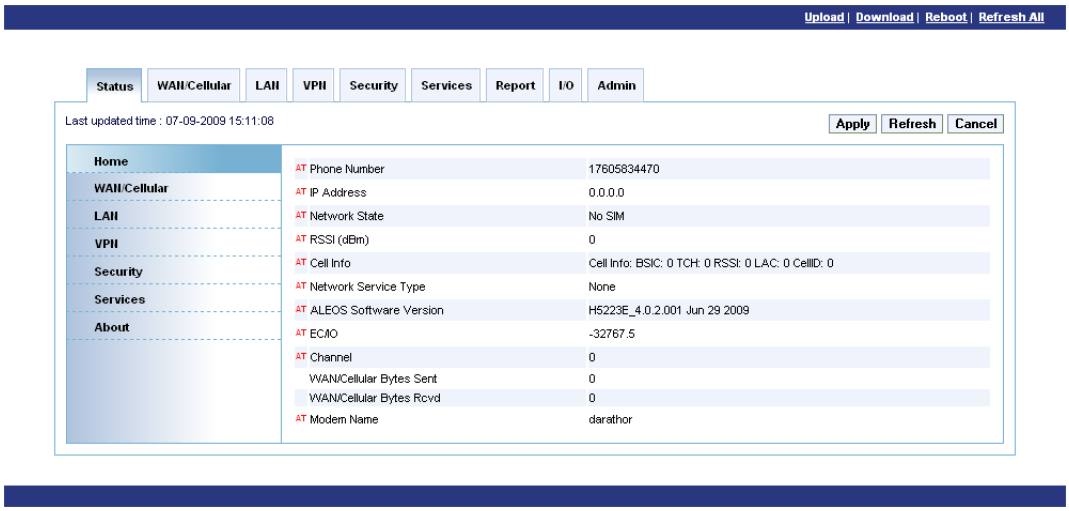

Figure 1-4: ACEmanager

Simplified Deployment

ACEmanager provides the ability to remotely set up and configure your Sierra Wireless AirLink products. Remote device setup and configuration reduces the deployment timeline of your wireless solution and provides a quicker path to ROI.

Templates allow you to easily configure devices in your fleet with identical settings, ensuring a simple, accurate deployment.

Monitor and Control

ACEmanager allows an administrator to remotely monitor a modem's status, health and configuration settings. The user interface displays signal strength, cell site information, byte counters and error conditions, enabling you to pinpoint any issues and troubleshoot immediately.

ACEmanager enables remote configuration and parameter settings to be changed or reset instantly over the air, change a device's port configuration, IP address settings, GPS settings, and much more. After configuring one modem, use the template feature to copy that device configuration to other devices.

Tip: *Configuration steps and examples in this guide use ACEmanager.*

ACEview

ACEview is an efficient status and connection monitoring application with a low-profile, easy to read interface. In ACEview, you can also update PRL.

Figure 1-5: ACEview

Modem Doctor

Modem Doctor and Modem Doctor USB is a troubleshooting and diagnostics utility. This utility will allow you to get a log file of the Raven X activity which you can then send to Sierra Wireless support or erase the current configuration completely.

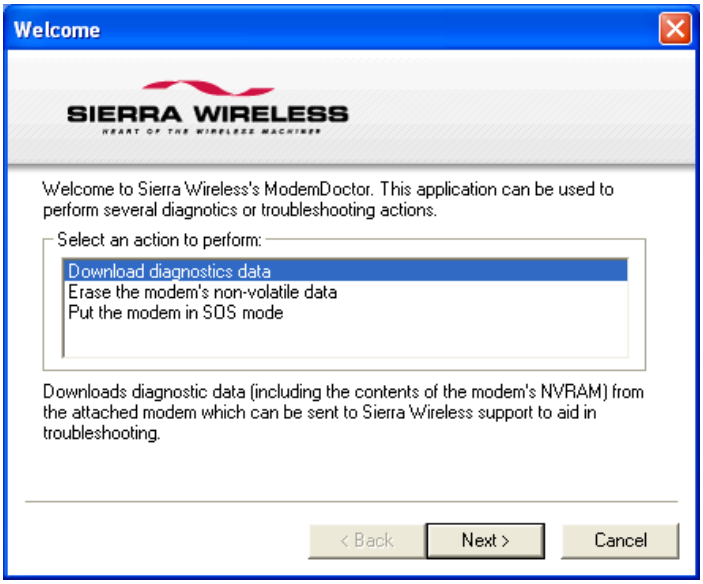

Figure 1-6: Modem Doctor

Connecting to Verizon

The Raven X uses Verizon as an ISP (Internet Service Provider) to connect you to the Internet.

Steps of a connection:

1. When your Raven X is powered on, it automatically searches for cellular service using CDMA-based cellular technology.
2. Your Raven X establishes a PPP (Point to Point Protocol or “dial” up connection) link to Verizon network, also called registering on the network, and receives an IP address.

3. When your Raven X has received its IP address from Verizon, a connection to the Internet or the cellular network is also available for computers or other devices connected directly to the Raven X.

The Raven X will perform routing for all internet traffic to and from the computers or other end devicse.

With the Raven X in Ethernet Public mode, only one device connected to the Ethernet port will receive the public IP address which is the one provided by the cellular network. In Ethernet Private mode, with a hub or switch connected to the Ethernet port, the Raven X will provide NAT for a range of computers or other devices connected to the switch or hub and Internet access to all of them.

Dynamic vs. Static IP Addresses

There are two types of addresses on networks: dynamic and static.

- Dynamic addresses are assigned on a “need to have” basis. Your Raven X might not always receive the same address each time it connects with Verizon.
- Static addresses are permanently assigned to a particular account and will always be used whenever your Raven X connects to the Internet. The IP address will not be given to anyone else.

Most ISPs (cellular included) use dynamic IP addresses rather than static IP addresses since it allows them to reuse a smaller number of IP addresses for a large number of customers. A dynamic IP address is suitable for many common Internet uses, such as web browsing, looking up data on another computer system, or other client functions (such as data only being sent out or only being received after an initial request).

Tip: *If your account with Verizon includes a dynamic IP address and you need a static IP, please consult your Verizon Representative for more information about changing your account for static IP support.*

If you need to contact your Raven X, a device connected to the Raven X, or a host system using the Raven X from the Internet, you need to have a known IP (such as one which is static) or domain name (an IP address which is converted by a DNS server into a word based name). If you have a dynamic IP address for your modem, you can use a Dynamic DNS service (such as IP Manager) to translate your IP address into to a domain name.

Caution: *If you want to connect remotely to your Raven X using TCP/IP, the IP address given to your modem by Verizon cannot be a private or internal IP address (such as a special private network) unless you are on the same network or inside that network's firewall (such as with frame relay).*

EV-DO

CDMA (Code Division Multiple Access) is the underlying digital radio network technology used by many cellular providers across the globe and is prevalent in North America. To provide backward compatibility and seamless connections in a wider range of locations, Sierra Wireless EV-DO products your Raven X will fall back to 1x when EV-DO is not available.

Sierra Wireless is certified with Verizon, a prominent North American 1x and EV-DO carrier.

EV-DO revision A is an enhancement on the original revision 0 adding expanded upload capabilities and a more robust connection overall. In addition to increasing the downlink speed, revision A also increases the uplink speed. In addition, it is backwards compatible and automatically connects with existing and broadly deployed EV-DO Rev. 0 and 1x networks ensuring reliable and pervasive connectivity.

Security

1x data transmissions are highly secure. Originally developed based upon the "spread spectrum" pioneered by the US Department of Defense, security in CDMA technologies is obtained by spreading the digital information contained in a particular signal of interest over multiple coded paths, over a much greater bandwidth than the original signal.

Connection methods

You can connect the Raven X to a USB or a Ethernet (RJ45) on a computer. When connected to a USB or Ethernet port, the Raven X behaves like a network card.

USB

The Raven X is equipped with a USB port which increases the methods by which you can send and receive data. The USB port can be set to work as either a virtual Ethernet port or a virtual serial port. A driver installation is required to use the USB port in either mode.

It is recommended that you use a USB 2.0 cable with your Raven X and connect directly to your computer for best throughput.

Virtual serial port

The Raven X supports one virtual serial port over USB. This VSP can be used, for example, to send AT commands, or to run many serial based applications such as HyperTerminal®.

Networking

IPSec

The IP protocol that drives the Internet is inherently insecure. Internet Protocol Security (IPSec), which is a standards-based protocol, secures communications of IP packets over public networks.

IPSec is a common network layer security control and is used to create a virtual private network (VPN).

The advantages of the IPSec feature includes:

- Data Protection: Data Content Confidentiality allows users to protect their data from any unauthorized view, because the data is encrypted (encryption algorithms are used).
- Access Control: Access Control implies a security service that prevents unauthorized use of a Security Gateway, a network behind a gateway or bandwidth on that network.
- Data Origin Authentication: Data Origin Authentication verifies the actual sender, thus eliminating the possibility of forging the actual sender's identification by a third-party.
- Data Integrity: Data Integrity Authentication allows both ends of the communication channel to confirm that the original data sent has been received as transmitted, without being tampered with in transit. This is achieved by using authentication algorithms and their outputs.

The IPSec architecture model includes the Sierra Wireless AirLink gateway as a remote gateway at one end communicating, through a VPN tunnel, with a VPN gateway at the other end. The remote gateway is connected to a Remote network and the VPN is connected to the Local network. The communication of data is secure through the IPSec protocols.

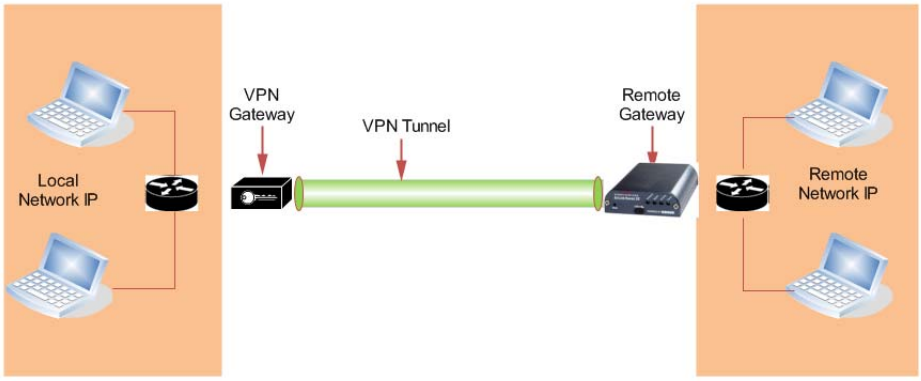

Figure 1-7: IPSec Architecture

GRE

GRE (Generic Routing Encapsulation) tunnel is used to carry non-IP packets through an IP Network. Non -IP packets, that are send over the GRE tunnel, need to be first encapsulated. Hence, ALEOS is used to configure and encapsulate non-IP packets and transmit over IP through the GRE tunnel.

Applications

Events Reporting

Events Reporting is Sierra Wireless AirLink's modem's new software feature provided via ACEmanager, that allows the users to generate reports from the events that take place. Event Reporting Protocol is an intuitive embedded protocol, which automatically formats the messages based on an event trigger. The messages generated are then reported to the remote server.

Software

The Raven X modem comes with the following software:

- AceView, the software for the Raven X which allows you to monitor your connections.
- The driver that forms the interface between the Raven X and your Windows operating system when using USB virtual Ethernet or USB virtual serial.
- The firmware that is stored in non-volatile memory and includes ACEmanager.

  The Raven X has an embedded radio module, also made by Sierra Wireless, Inc. There are two firmware programs on the device—one stored on the controller board of the Raven X and one on the radio module.

  The firmware was loaded into the radio module and controller board when the Raven X was assembled. As new versions of the software and firmware are released, they are posted at www.sierrawireless.com.

Documentation

This *Raven X User Guide* describes how to:

- Install the Raven X hardware.
- Connect the radio antennas.
- Connect a notebook computer and other input/output (I/O) devices.
- Interpret the LEDs on the Raven X and the indicators in the AceView software.

This *User Guide* is provided as a PDF (Portable Document Format) file on the installation CD or from the Sierra Wireless support website.

Tools and Reference Documents

User Guide	Description
ALEOS User Guide	This document discusses software configuration in ACEmanager and explains all the ALEOS features.
ACEview User Guide	This document explains the use of this utility tools which is used to view and monitor the connection state of a Sierra Wireless AirLink device.
ACEnet User Guide	This document explains the use of ACEnet services for remote management of Sierra Wireless AirLink device.

2: Specifications

- Interface Port Pin-Outs
- Power Connector

Features and Benefits

- Embedded Intelligence
- Low Power Consumption
- High-Speed Processor
- High-Speed 2-way Data
- Ethernet and Serial Port
- Machine Protocols
- Persistent Network Connectivity
- Remote Management and Configuration
- Class I Div 2 Certified

Technology

- CDMA EV-DO Revision A
  With Fallback to:
  - CDMA 1x EV-DO (Revision 0)
  - CDMA 1xRTT
  - CDMA IS-95

Bands

- 800 Mhz Cellular
- 1900 Mhz PCS

Environmental

- Operating Temperature:
  - -30° to 70° Celsius
- ° Storage Temperature:
  - -40° to 85° Celsius

Power Consumption: (@12V DC)

- Transmit/Receive (Typical/Max) 239/270 mA
- Idle 104 mA
- Dormant 85 mA
- Input Voltage 9 - 28V DC

Standards/Approvals

- Carrier specific approvals
- FCC
- Industry Canada
- This apparatus is suitable for use in Class I, Division 2, Groups A, B, C, D or unclassified or non-hazardous locations.

Warning: *Explosion Hazard - Substitution of any components may impair suitability for Class I, Division 2.*

Host Interfaces

- Ethernet: 10/100 Mbps RJ-45
- RS-232: DB-9 DCE (300-230400 baud)
- Antenna Connection:
  - Primary Cellular - 50 Ohm SMA
  - Receive Diversity - 50 Ohm SMA

Warning: *The antenna should be installed no closer than 20 cm from the human body. It is one of the RSS-102 requirements for devices not requiring SAR.*

Dimensions

- 143mm x 37mm x 75mm
- 317 grams

Application Interfaces

- TCP/IP, UDP/IP, DHCP, HTTP, SNMP, SMTP, SMS, MSCI, Binary, Modbus, and more

LED Indicators

- Network
- Signal
- Activity
- Power

Interface Port Pin-Outs

Serial Port

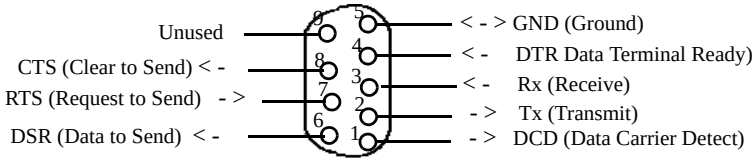

Figure 2-1: Serial Port Diagram: Female DB-9 DCE (not to scale)

Power Connector

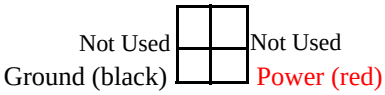

Figure 2-2: Power Connector (not to scale)

3: Activating your Raven X on the Verizon Network

3

- Automatic Activation
- Setup Wizard
- Activating Using AT Commands

This chapter provides step-by-step directions for activating your Raven X on Verizon's network.

Automatic Activation

One of the special features of your Raven X for Verizon is the ability to activate itself automatically. When you first power on the Raven X, it will check to see if it has been activated with account data. If it finds that it has not yet been activated, the Raven X will attempt to retrieve the account data from the Verizon network using Over-the-Air Service Provisioning (OTASP).

Caution: *You need to have an account with Verizon before you attempt automatic activation. If you have not ordered an account from Verizon for your Raven X, it will not succeed at activating.*

a. Attach the antenna to your Raven X.

b. Plug the Raven X into power.

c. While the LED lights cycle from the outside to the inside, the Raven X is attempting to download its account information. The download process may take about a minute or two.

Caution: *Do not move your Raven X while it is being programmed.*

d. When the Network lights illuminate, your Raven X has successfully completed OTASP and is registered on the Verizon network.

e. If you need to update the ALEOS firmware, change the account information, install the Dial-Up Networking driver, or want to test the account settings of your Raven X, follow the directions below to use the Setup Wizard. Otherwise, skip the Wizard steps and go to the Hardware Installation section.

Setup Wizard

You can find the Setup Wizard installation on the CD which came with your Raven X or on the Sierra Wireless website: http://www.sierrawireless.com/support/AirLink/default.aspx.Use only the Setup Wizard for Verizon for best results.

Note: The Setup Wizard requires the Microsoft .NET framework v. 1.1 and Microsoft Windows 98, Windows 2000, Windows XP, or later. You can obtain .NET from Microsoft: http://www.microsoft.com.

Note: If you are setting modem for circuit switched mode, pelase test your connection to ensure your network account has been set up correctly.

1. Wizard: Starting the Setup Wizard
   a. Connect the Raven X to your computer using an Ethernet cable or a serial cable USB cable.
   b. Connect the power adapter and antenna to your Raven X.
   c. Install the Setup Wizard by running VerizonSetupWizard.exe and follow the prompts.
   d. Run the Setup Wizard from the Windows Start menu.

   Start>All Programs>AirLink Communications>Setup Wizard>Setup Wizard

Figure 3-1: Setup Wizard

   e. Click *Next* to start the Wizard process.

If you connected your Raven X to the port on your computer, select *Connected to an Ethernet/USB Port* and use the drop down menu to select the Ethernet adapter or USB/net connectionon your computer to which the modem is connected (most computers only have one adapter which will be selected for you). The default password for the modem is entered for you. Click *Next*.

Note: If you want to use USB with the Setup Wizard you will need to first install the driver, refer to Installing the USB driver section in this Chapter.

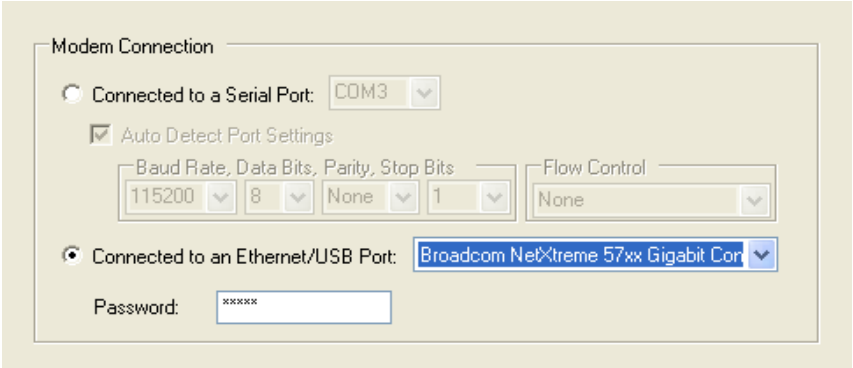

Figure 3-2: Setup Wizard : Ethernet Connection/USB Connection

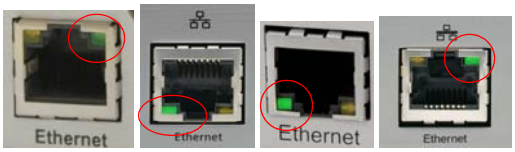

Figure 3-3: Ethernet Port

Tip: *If the Setup Wizard is unable to detect the Raven X, check the green link LED on the Ethernet port of the modem to see if it is lit to indicate an Ethernet connection with your computer. If you do not see this light or if your computer shows a "Network Cable Unplugged" message or icon, try a different Ethernet cable.*

OR

If you connected your Raven X to the serial port on your computer, select *Connected to a Serial Port*, check Auto Detect Port Settings or select the port from the drop down menu. Click *Next*.

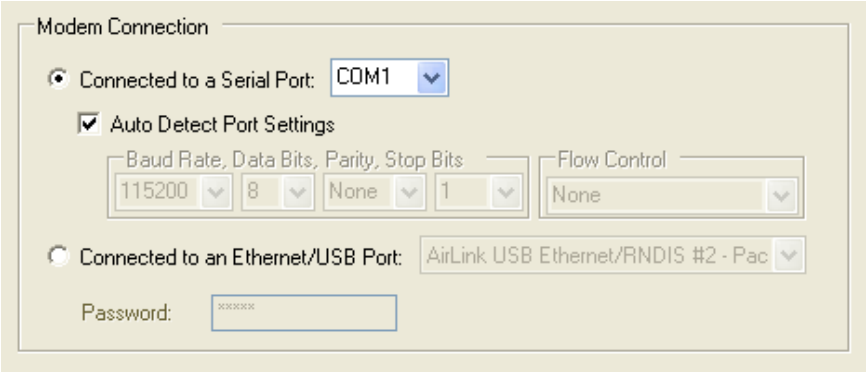

Figure 3-4: Setup Wizard : Serial Connection

Note: You cannot activate with serial and would need USB/net to use set up wizard.

After the Setup Wizard connects to your Raven X, the details for your specific model will be displayed. If the incorrect model is displayed, your Raven X so the Wizard can attempt to connect again. Click *Next*.

After the Wizard detects your Raven X, you will be offered a menu of Setup tasks. Choose the tasks you need from those displayed.

Figure 3-5: Setup Wizard : Task Menu

- **Update ALEOS Firmware:** Check the Sierra Wireless server for the latest ALEOS firmware.
- **Activate Modem:** Configure your Raven X to connect on the Verizon network.
- **Test Modem Setup:** Verify your Raven X is properly configured and connecting on the Verizon network.
- **Setup a DUN Connection:** Create a Dial-Up Networking entry for local connection. This part of the setup is only needed if you will be using your Raven X to connect directly from a computer to the Internet or other network.

Click *Next* when you have selected your desired options.

Note: Based on your selections, you may not need to do all of the following Wizard steps.

Note: Follow this step, only if Update Aleos option has been selected in the task menu checkbox

On occasion, Sierra Wireless releases updates to the firmware for your modem. These updates can include new features as well as bug fixes. To make sure your modem is at optimal performance, it is recommended to *Check for Updates* and *Update Now* if an update is found.

Note: While checking for ALEOS Firmware updates, the Setup Wizard uses the Internet connection on your computer to connect to the Sierra Wireless server. Your Raven X is not connected to the wireless network for this process. If you are using Ethernet to activate your Product Name and need to remove the Ethernet cable from your modem to connect to your usual Internet connection to Check for Updates*, be sure to reconnect the Raven X before you select* Update Now*.*

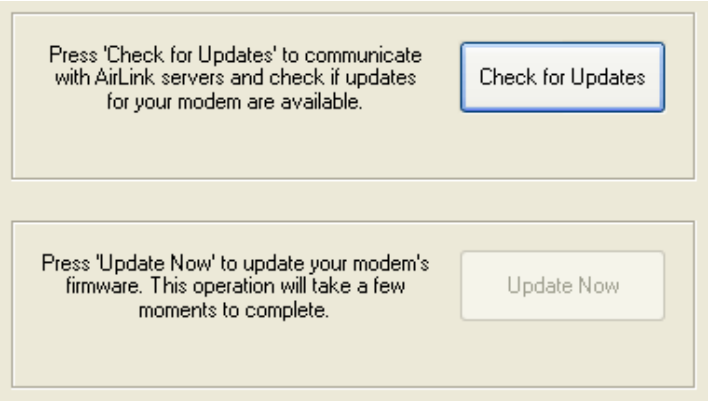

Figure 3-6: ALEOS Update

Tip: *You can download current ALEOS firmware from the Sierra Wireless web site and install it separately.*

Click *Next* when you are finished updating or if you choose not to update.

The steps and data required to activate your Raven X on the Verizon network varies depending on the model.

The Wizard will check the signal strength of your Raven X (RSSI). Click Next to begin the activation process.

Note: The process may take a few minutes. Progress information will display across the bottom.

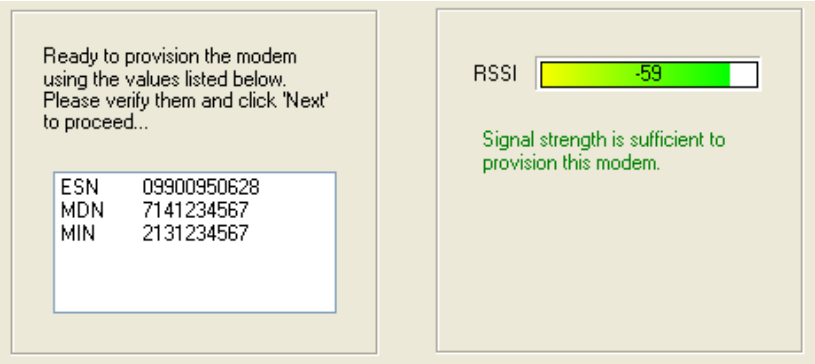

Figure 3-7: Setup Wizard : Signal Test

Tip: *If you have low signal, you may encounter difficulties activating your modem. Try a different location or a different antenna to increase your signal if it is -90 or lower (yellow to red bar).*

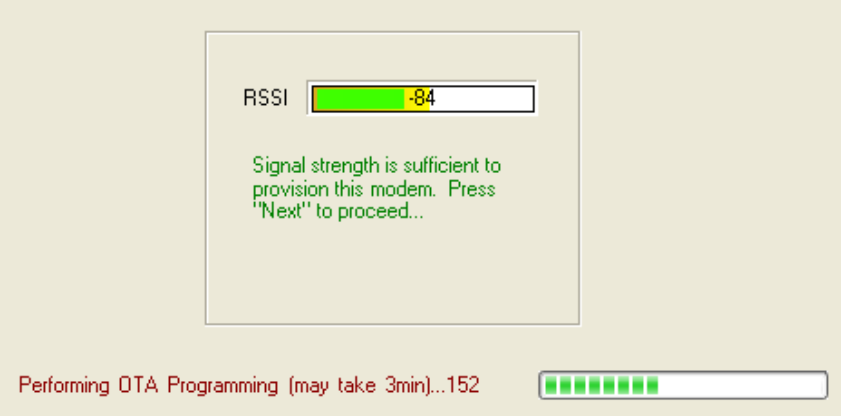

Figure 3-8: Setup Wizard: OTASP screen

Tip: *The Raven X will get all of its account data from the next work while doing an over the air activation (OTASP).*

Your connection of your Raven X to the Internet is tested using the Verizon cellular network.

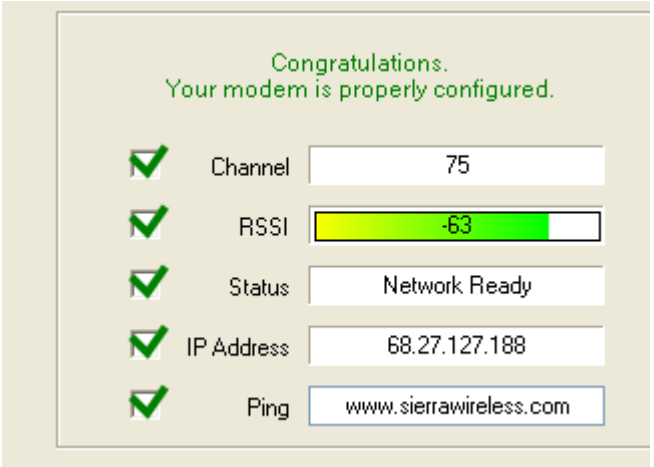

Figure 3-9: Setup Wizard: Connection Test

Green checks in the boxes indicate the tests were successful and your Raven X is functioning properly. At this point your modem is configured and activated to work on the Verizon network.

*Note: These tests, depending on the strength of your signal, may take a few minutes. Initially, while the tests are being performed, there may be red **X**s in the boxes. The Status line will give an indication of the progress of the connection process.*

If Test Modem Settings shows the status of your modem is “Data Connection Failed - Waiting for Retry”, “No Service”, “No Carrier”, “Network Negotiation Failed”, “Network Authentication Failed”, “Modem Not Registered”, or the Reg Net light on the modem is not lit, double-check your device activation information and return to the Activate Modem step to reconfigure your Raven X.

Private Networking Data Link is a special account configuration that provides a more secure connection for your Raven X and often provides a static IP with authentication on an exclusive server. Consult your Verizon representative for details about Private Networking Data Link if it’s something you need for your account.

Before you start the configuration for Private Networking, Data Link, the connection to the network may be checked.

Caution: *Ensure the Raven X has been activated before you proceed with the Private Networking Data Link steps. Configuring Private Networking Data Link before the Raven X has been activated can prevent successful activation.*

- The Primary Home Agent (**Primary HA**) and Secondary Home Agent (**Secondary HA**) are the network servers responsible for IP addressing and routing. Fill in the information, as applicable.

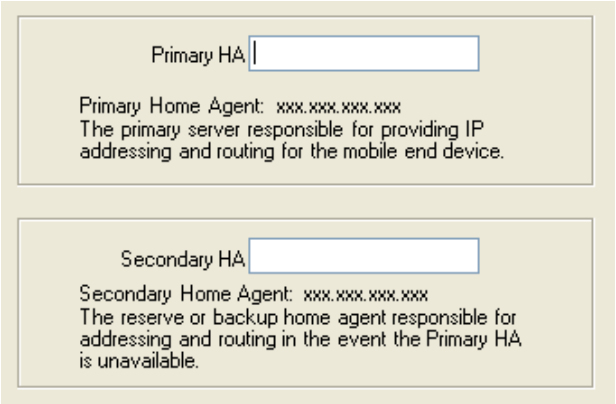

Figure 3-10: Setup Wizard : Primary and Secondardy HA

- **HA Shared Secret Password** is used for both Home Agent's. This may be filled in for you with a password created for your Raven X for the Verizon network.
- The **AAA/Vision Password** is required by the Authentication, Authorization and Accounting server. This may be filled in for you with default for Verizon.

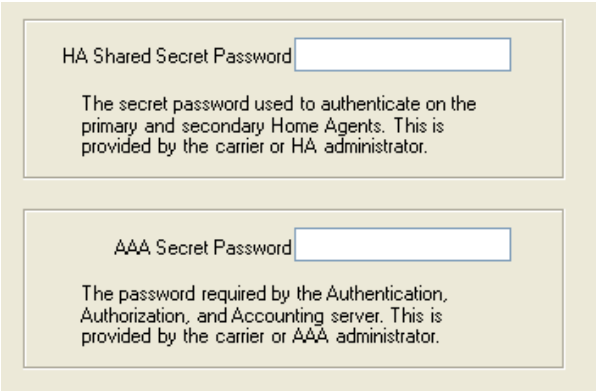

Figure 3-11: Setup Wizard : Passwords

When the Private Networking Data Link configuration is completed, the connection to the network will be tested again.

Note: Using DUN, the speed of the connection is the limited to the connection between the modem and the computer. This may be less than the total bandwidth available with EV-DO HSDPA.

Dial-up Networking (DUN) allows a computer or other device to use the serial port on a Raven X to connect to the Internet or private network just like an analog modem using a standard phone line. The Setup Wizard will install a driver for the Raven X and set up the connection between your computer and the Raven X. You will need to have administrator access on the computer for this section of the installation.

If you already have other modems installed on your computer, they will be listed on the Sierra Wireless AirLink Modem Installation screen. If you have other modems installed on your computer using the same serial port, they may conflict. As long as you do not intend to use them, you can Remove other modems using this menu.

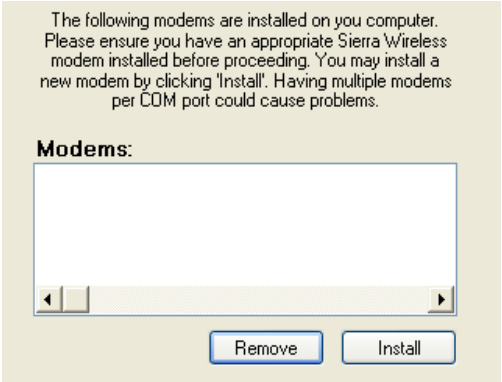

Figure 3-12: Setup Wizard : DUN driver

a. Select *Install* to begin adding the driver for the Raven X to your computer.

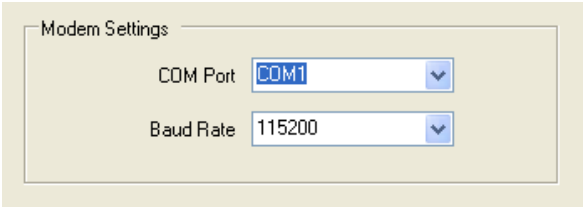

Figure 3-13: Setup Wizard : DUN settings

b. The COM port and speed should match the settings of the Raven X and where it will be connected (default settings will be pre-entered).

c. Select *Next* to begin the driver installation.

d. You will see a confirmation box from Microsoft Windows to specify if you wish to install this driver on your computer. Select *Continue Anyway* to install the driver.

e. When the driver is installed, you will return to the Modem installation screen. The Raven X should now be listed (in addition to any other modem installed on your computer).

f. Click *Next* to continue to install the DUN configuration.

Figure 3-14: Setup Wizard : DUN connections

If you already have a DUN connection installed for a different modem, it will be listed on the Dial-up Networking Connection screen.

g. Select *Add* to create a new connection for the Raven X.

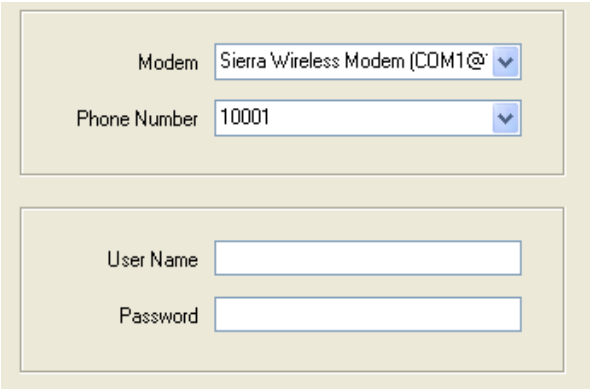

Figure 3-15: Setup Wizard : DUN settings

h. From the drop down menu, select *Sierra Wireless modem*.

i. The defaults for the phone number, user name and password will already be entered.

j. Select *Next* to begin the install.

Figure 3-16: Setup Wizard : DUN

At the completion of the DUN installation, you will return to the Dial-up Networking Connection screen. The AirLink modem should now be listed as a connection.

Your modem is now ready to be used as a DUN device for any applications on your computer needing a network connection. If you have DUN installed for more than one modem, you will need to specify in your application which DUN to use. Unless it is the only DUN, your Raven X may not be the one your computer sees as a default.

Activating Using AT Commands

An alternate method to configure and activate your Raven X is by using AT commands sent directly to the modem with a terminal application.

Caution: *It is not possible to activate the Raven X using either ACEmanager or AceNet.*

1. Set telnet timeout in to 20 minutes.
2. Save the telnet setting.
3. Enter the user name of your account (NAI). The user name is usually expressed as an email address with phone number of the account (example,

1234567@carrier.com). This information should be provided by your carrier. You may not need this step.

AT*NETUID=[NAI]

4. Enter the password of your account. This information should be provided by your carrier. You may not need this step.

   AT*NETPW=[password]

5. Verify ALEOS has established communication to the internal hardware.
6. Enter the activation command appropriate for your type of account. The SID and NID are optional and only required if your account type uses them.
   - If you have the same number for the MIN and MDN or MSID:

   AT*PROVISION=MSL,MDN[,SID,NID]

   - If you have the different numbers for the MIN and MDN or MSID:

   AT*PROVISION2=MSL,MDN,MIN/MSID[,SID,NID]

1. Set telnet timeout in to 20 minutes.

   AT*TELNETTIMEOUT=20

2. Save the telnet setting.

   AT&W

3. Verify ALEOS has established communication to the internal hardware.

   ATI3

4. Enter the user name of your account (NAI). The user name is usually expressed as an email address with phone number of the account (example, 1234567@carrier.com). This information should be provided by your carrier. You may not need this step.

   AT*NETUID=[NAI]

5. Enter the password of your account. This information should be provided by your carrier. You may not need this step.

   AT*NETPW=[password]

6. Start the IOTA session.

   AT!IOTASTART

   Status will be output until IOTA completes with ‘IOTA Successful’ or ‘ 1012 ERROR’.

4: Hardware Installation of the Raven X

4

- Connecting to Power
- Connecting to a Computer or other Device
- Indicator Lights
- Mounting

Note: During installation, please be sure that the cables are secure but do not bear any additional weight that could loosen the connector from the unit.

Your Raven X should be mounted in a position that allows easy access for the cables so they are not bent, constricted, in close proximity to high amperage, or exposed to extreme temperatures. The LEDs on the front panel should be visible for ease of operational verification. You should ensure that there is adequate airflow around the modem but that it is kept free from direct exposure to the elements, such as sun, rain, dust, etc.

Caution: *The Raven X is in a hardened case and designed for use in industrial and extreme environments. However, unless you are using cables expressly designed for such environments, they can fail if exposed to the same conditions the Raven X can withstand.*

Figure 4-1: Raven X Connectors

Note: This device is not intended for use within close proximity of the human body. Antenna installation should provide for at least a 20 CM separation from the operator.

Antennas selected should not exceed a maximum gain of 5 dBi under standard installation configuration. In more complex installations (such as those requiring long lengths of cable and/or multiple connections), it's imperative that the installer follow maximum dBi gain guidelines in accordance with the radio communications regulations of the Federal Communications Commission (FCC), Industry Canada, or your country's regulatory body (if used outside the US).

Your Raven X will work with most cellular antennas with a SMA connector. Connect the primary antenna or primary RF cable directly to the antenna connector on the back of the Raven X.

Tip: *When using a cable to an antenna placed away from the modem, minimize the length of your cable. All gain from a more advantageous antenna placement can be lost with a long cable to the modem.*

Note: Use of receive diversity for EV-DO is optional. Data transmission and reception may be adversely affected if it is not used.

To provide for diversity in the signal reception, connect the second antenna to the second antenna port (SMA, labeled Rx Div) on the back of the Raven X.

Caution: *If you are not using a diversity antenna, you should disable the receive diversity option. In Ace Manager in the 1x/EV-DO group, configure *EVDODIVERSITY.*

Connecting to Power

Warning: ***Risk of electric shock:*** *Only use the supply voltages listed in this user guide.*

Warning: *When using AC to DC adapter the ambient temperature should not exceed 40 ^{0}C.*

Your Raven X can be used with either DC or AC, with the appropriate power adapter. DC cables and AC adapters are available as optional accessories in addition to the one included with your Raven X.

The DC power cable positive lead should be connected to the battery or power source positive terminal. The power cable negative lead should be connected to the battery or power source negative terminal.

Tip: *The DC power cable has a white wire lead in addition to the power positive and negative. This is for a feature not present in the Raven line modems. In the Raven X, the white wire lead has no function and can be ignored.*

Warning: *Explosion Hazard - Do not disconnect equipment unless power has been switched off or the area is known to be non-hazardous.*

Connecting to a Computer or other Device

Figure 4-2: Ethernet

The Ethernet port of your Raven X can be connected directly to a computer or other Ethernet device with either a cross-over cable or a straight-through cable. The Ethernet port on the Raven X is auto-sensing and will auto-detect the speed of the connecting device for 100baseTX or 10baseT. If you are connecting the modem to a hub or switch you should use a straight through cable or use the uplink port on the hub or switch with a cross-over cable.

Figure 4-3: Serial

The serial port of your Raven X can be connected directly to most computers or other devices using a standard straight through cable. If you have a DCE device, you will need a null modem or null modem cable.

Indicator Lights

When solid, Raven X indicates a successful connection. When your Raven X is connected to power and an antenna, there is a specific pattern to the lights to indicate its operation mode.

Figure 4-4: Raven X Indicator lights

- **Network** - Indicates a successful connection to the cellular network with an IP address given and a channel acquired.
- **Signal** - Light shows the strength of the signal and may be nearly solid (strong signal) or flashing (weaker signal). A slow flash indicates a very weak signal.

RSSI LED Ranges

RSSI/Signal LED Status	Ranges of RSSI (dBm)
On Solid	Equal to or stronger than -69
Fast Blink	-70 to -79
Normal blink	-80 to -89
Slow Blink	-90 to -99

RSSI LED Ranges

RSSI/Signal LED Status	Ranges of RSSI (dBm)
Extinguished	Equal to or weaker than -100

- **Activity** - Lights will flash as data is transferred to and from the PinPoint modem on the remote network.
- **Service** - Indicates when the connection is EV-DO. Unlit indicates 1x.
- **Power** - Indicates the power adapter is connected and there is power getting to the Raven X.
- The **Reset button** (on the left side of the Raven X) has two functions. If it is quickly depressed and released, the modem will simply power cycle the internal hardware. If, however, the reset is depressed and held for several seconds (count 10 slowly, and wait for the power light to go off after the light pattern stops), the ALEOS configuration settings will return to the factory defaults.

Caution: *If you reset the modem configuration using the reset button, you may need to reactivate your Raven X with Verizon.*

Light Patterns

The LEDs on the front of the modem will respond in different patterns to indicate modem states.

- **Normal** - Each LED, mentioned above, is lit as applicable.
- **Start up** - The LEDs will cycle from left to right.
- **PassThru mode** - Network and Signal LEDs will blink in tandem. The Activity LED will blink when transmitting or receiving data.
- **SOS** - The Network and Service Err or Service LEDs will blink alternate to each other.
- **Configuration Reset** - The LEDs will cycle left to right and then right to left 4 times.
- **Authentication Failure** - The Network, Signal, and Activity LEDs blink every 2 seconds.
- **Data Retry** - The Network, Signal, and Activity LEDs blink every 3 seconds.
- **Invalid MAC Address or Ethernet Initiation Fail** - The Service LED will blink.

OTASP: One at a time, the Network, Signal and Acitivity LED will flash (respectively).

Mounting

The integrated mounting with keyhole screw mounts on the Raven X will allow you to secure your modem nearly anywhere, quickly and easily, without the need for a separate bracket.

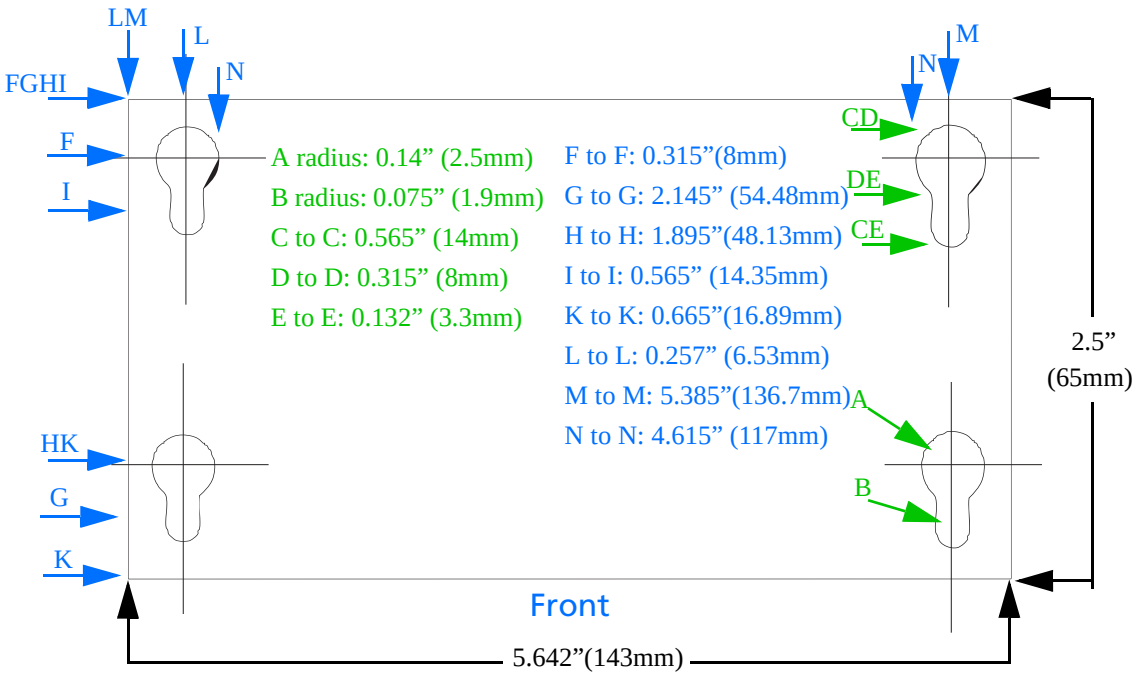

Figure 4-5: Diagram of the Raven X base

5: Regulatory Information

Federal Communications Commission Notice (FCC United States)

Electronic devices, including computers and wireless modems, generate RF energy incidental to their intended function and are therefore subject to FCC rules and regulations.

This equipment has been tested to, and found to be within the acceptable limits for a Class A digital device, pursuant to part 15 of the FCC Rules.

This equipment generates radio frequency energy and is designed for use in accordance with the manufacturer's user manual. However, there is no guarantee that interference will not occur in any particular installation.

If this equipment causes harmful interference to radio or television reception, which can be determined by turning the equipment off and on, you are encouraged to try to correct the interference by one or more of the following measures:

- Reorient or relocate the receiving antenna
- Increase the separation between the equipment and the receiver
- Connect the equipment into an outlet on a circuit different from that to which the receiver is connected
- Consult the dealer or an experienced radio/television technician for help
- This device complies with Part 15 of the Federal Communications Commission (FCC) Rules. Operation is subject to the following two conditions:

1. This device may not cause harmful interference.
2. This device must accept any interference received, including interference that may cause undesired operation.

Warning: *Changes or modifications to this device not expressly approved by Sierra Wireless could void the user's authority to operate this equipment.*

Industry Canada

This Class A digital apparatus meets all requirements of the Canadian Interference Causing Equipment Regulations. Operation is subject to the following two conditions:

1. this device may not cause harmful interference, and
2. this device must accept any interference received, including interference that may cause undesired operation.

Cet appareillage numérique de la classe B répond à toutes les exigences de l'interférence canadienne causant des règlements d'équipement. L'opération est sujette aux deux conditions suivantes:

1. ce dispositif peut ne pas causer l'interférence nocive, et
2. ce dispositif doit accepter n'importe quelle interférence reçue, y compris l'interférence qui peut causer l'opération peu désirée.

Antenna Considerations

Although the antenna model(s) used with these devices meet(s) the Industry Canada Radio Frequency requirements, it is possible that the future customers may swap them for different ones without network provider's knowledge and approval. Such customers must be made aware of, and follow, the Radio Frequency requirements applied in this Technical Approval:

- RSS-102 "Radio Frequency Exposure Compliance of Radiocommunication Apparatus (All Frequency Bands)"
- RSS-129 "800 Mhz Dual-Mode CDMA Cellular Telephones"
- RSS-132e "Cellular Telephones Employing New Technologies Operating in the Bands 824-849 Mhz and 869-894 Mhz"
- RSS-133 r1 "2 GHz Personal Communications Services"

RF Exposure

In accordance with FCC/IC requirements of human exposure to radiofrequency fields, the radiating element shall be installed such that a minimum separation distance of 20cm should be maintained from the antenna and the user's body .

Warning: *This product is only to be installed by qualified personnel!*

To comply with FCC/IC regulations limiting both maximum RF output power and human exposure to RF radiation, the maximum antenna gain must not exceed 5 dBi in the Cellular band and 4 dBi in the PCS band.

EU

Sierra Wireless hereby declares that the Raven X devices conform to all the essential requirements of Directive 1999/5/EC.

Products are marked with a CE and notified body number as shown here:

CE 0682

The Declaration of Conformity made under Directive 1999/5/EC is available for viewing at the following location in the EU community.

Sierra Wireless

39677 Eureka Drive

Newark, CA

USA 94560

The device is a Class A device for use in commercial environment.

WEEE Notice

If you purchased Raven X in Europe, please return it to your dealer or supplier at the end of its life. WEEE products may be recognised by their wheeled bin label on the product label.

SIERRA
WIRELESS

Section 7 - Enclosure HVAC & Accessories

- Killark Class 1, Division 2 Hazardous Location Light Specifications
- Marley G Series Class 1, Division 2 Heater Installation & Operation Instructions
- Dayton Class 1, Division 2, 20" Ventilation Fan Installation & Maintenance Instructions
- Grainger Model 6JEN2 Emergency Light Specifications
- Safe T Net 100 LEL Monitor External Display Operator's Manual
- Combustible Gas Diffusion Transmitter (65-5001) Operator's Manual
- Net Safety Millennium Smoke Detector Specifications
- Net Safety Air Particle Monitor (Infrared Smoke Detector) User Manual
- Grainger Model 5KDG0 Exterior Audio/Visual Indicator Specifications
- Grainger Model 5KDG1 Exterior/Visual Indicator Back Box Specifications
- Grainger Model 1N900 Interior Visual Indicator Specifications
- Grainger Model 3WU54 Interior Audio Indicator Specifications

Class I, Div. 2, Groups A,B,C,D
Class I, Zone 2, Groups IIC,IIB,IIA
NEMA 3, 4*

Listed - File E10514
UL-1571 Standard for incandescent fixtures
UL-844 Standard for hazardous location fixtures

Certified - File LR11713

Pendant

Ceiling

FEATURES-SPECIFICATIONS

Applications

Killark "V" Series Vaportight fixtures are now available Third Party Certified for use in certain hazardous as well as wet locations which require durable, protected lighting fixtures.

Wet and dirt laden industrial environments such as walkways, tunnels, loading docks, stairwells, etc. made hazardous by the presence of flammable vapors as defined by the NEC.

Fixtures intended for base-up mounting only.

Heat resistant (tempered) glass globes recommended for wet locations.

** NEMA 3, 4 when used with tempered glass.*

Features

Killark Vaportight assemblies using V**X**FC bodies & tempered glass have all the features & advantages of "V" Enclosed & Gasketed" models plus:

- Heavy-duty silicone gasketing for NEMA 4 requirements
- Third party tested & labeled for use in C1D2 areas
- Modular design permits selection of splice box, fixture body, globe, guard and reflector for specific or custom applications
- Existing V Series mounting boxes may be retrofitted to upgrade to NEMA 4; C1D2 suitability

Copper-free aluminum construction with electrostatically applied epoxy/polyester finish resists corrosion

APPLICATION DATA①

FIXTURE TYPE	LAMP SIZE	GLOBE TYPE	TEMPERATURE CODE
100	A-19 60W	colored & clear	T2C (230°C)
100	A-19 70W	colored & clear	T2D (215°C)
100	A-19 100W	colored & clear	T2A (280°C)
100	A-21 100W	colored & clear	T2B (260°C)
100	A-21 150W	colored & clear	T2 (300°C)
100	A-21 100W	clear only	T2B (260°C)
100	A-21 150W	clear only	T2C (230°C)
200	A-23 200W	colored & clear	T2 (300°C)
200	PS-25 200W	colored & clear	T2A (280°C)
200	PS-25 300W	colored & clear	(350°C)

① Suitability based on base up installation

See dimensions page L13.

V SERIES – WEATHERPROOF
INCANDESCENT COPPER-FREE ALUMINUM FIXTURES

Enclosed and Gasketed

Compliances

- UL – Listed File E27731
- CSA – Certified File LR11851

VUAG, VUAGG

VUXBG, VUXBGG

VUXG, VUXGG

VUCG, VUCGG

ORDERING INFORMATION - DIMENSIONS

PENDANT MOUNT WITH VGA SPLICE BOX

FIXTURE TYPE	LAMP WATT	HUB SIZE	CATALOG NUMBER		CONSISTS OF			
			FIXTURE W/ GLOBE	FIXTURE W/ GLOBE & GUARD	MOUNTING BOX	FIXTURE BODY	CLEAR GLOBE*	GUARD (if selected)
100	150	1/2"	**VUAG-1-100**[2]	**VUAGG-1-100**[2]	VGA-1	VFC-100	VCG-100	VAG-100
		3/4"	**VUAG-2-100**[2]	**VUAGG-2-100**[1]	VGA-2	VFC-100	VCG-100	VAG-100
200	300	1/2"	**VUAG-1-200**[2]	**VUAGG-1-200**[2]	VGA-1	VFC-200	VCG-200	VAG-200
		3/4"	**VUAG-2-200**[2]	**VUAGG-2-200**[2]	VGA-2	VFC-200	VCG-200	VAG-200

CEILING MOUNT WITH FEET USING VBC SPLICE BOX AND VBA ADAPTER

FIXTURE TYPE	LAMP WATT	HUB SIZE	CATALOG NUMBER		CONSISTS OF			
			FIXTURE W/ GLOBE	FIXTURE W/ GLOBE & GUARD	MOUNTING BOX/ADAPTER	FIXTURE BODY	CLEAR GLOBE*	GUARD (if selected)
100	150	1/2"	**VUXBG-1-100**[1]	**VUXBGG-1-100**[1]	VBC-1 + VBA	VFC-100	VCG-100	VAG-100
		3/4"	**VUXBG-2-100**[1]	**VUXBGG-2-100**[1]	VBC-2 + VBA	VFC-100	VCG-100	VAG-100
200	300	1/2"	**VUXBG-1-200**[2]	**VUXBGG-1-200**[2]	VBC-1 + VBA	VFC-200	VCG-200	VAG-200
		3/4"	**VUXBG-2-200**[2]	**VUXBGG-2-200**[2]	VBC-2 + VBA	VFC-200	VCG-200	VAG-200

CEILING MOUNT WITH VGX SPLICE BOX

FIXTURE TYPE	LAMP WATT	HUB SIZE	CATALOG NUMBER		CONSISTS OF			
			FIXTURE W/ GLOBE	FIXTURE W/ GLOBE & GUARD	MOUNTING BOX	FIXTURE BODY	CLEAR GLOBE*	GUARD (if selected)
100	150	1/2"	**VUXG-1-100**[2]	**VUXGG-1-100**[2]	VGX-1	VFC-100	VCG-100	VAG-100
		3/4"	**VUXG-2-100**[2]	**VUXGG-2-100**[2]	VGX-2	VFC-100	VCG-100	VAG-100
200	300	1/2"	**VUXG-1-200**[2]	**VUXGG-1-200**[2]	VGX-1	VFC-200	VCG-200	VAG-200
		3/4"	**VUXG-2-200**[2]	**VUXGG-2-200**[2]	VGX-2	VFC-200	VCG-200	VAG-200

CEILING MOUNT WITH VGC SPLICE BOX - FEED THROUGH

FIXTURE TYPE	LAMP WATT	HUB SIZE	CATALOG NUMBER		CONSISTS OF			
			FIXTURE W/ GLOBE	FIXTURE W/ GLOBE & GUARD	MOUNTING BOX	FIXTURE BODY	CLEAR GLOBE*	GUARD (if selected)
100	150	1/2"	**VUCG-1-100**[2]	**VUCGG-1-100**[1]	VGC-1	VFC-100	VCG-100	VAG-100
		3/4"	**VUCG-2-100**[2]	**VUCGG-2-100**[2]	VGC-2	VFC-100	VCG-100	VAG-100
200	300	1/2"	**VUCG-1-200**[2]	**VUCGG-1-200**[2]	VGC-1	VFC-200	VCG-200	VAG-200
		3/4"	**VUCG-2-200**[2]	**VUCGG-2-200**[2]	VGC-2	VFC-200	VCG-200	VAG-200

* For other colors, order globes and fixture components separately

1 Fixture supplied as component unit pack when ordered by this catalog number

2 Catalog number for ordering convenience; fixture is shipped as components as listed in catalog number table

Marley
Engineered Products
An SPX Company

SERVICE REFERENCE	
SALES REFERENCE	5200-2472-000
	161-302639-002
DATE	MAY, 2002

INSTALLATION, OPERATION
RENEWAL PARTS IDENTIFICATION

G Series (Model B) Convector Heater for Hazardous Locations

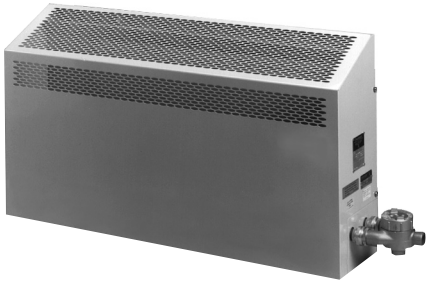

GENERAL

Type G-Series Convection Heaters are designed for use in Class I, Div I hazardous environments. Units without control options are suitable for areas classified as Groups B, C & D. Units with built-in controls can be supplied for groups C and D or B, C and D. Refer to classification stamped on heater nameplate.

⚠WARNING

FIRE/EXPLOSION HAZARD. To prevent ignition of hazardous atmospheres, this heater should not be installed in areas where vapors or gases having an ignition temperature less than 280°C (536°F)(T2A) at 1.8kW, 3.6kW, 4.5kW, 7.6kW, 9.0kW or 180°C (356°F)(T3A) at 1.6kW, 3.2kW, 4.0kW are present. These heaters must not be operated in ambient temperatures exceeding 40°C (104°F).

NOTE: Article 500 of the National Electric Code (NEC) outlines requirements for installation of electrical equipment in hazardous (Classified) locations.

1. Connect air heaters to the same line voltage as on heater nameplate.
2. Heaters can be mounted individually end to end.
3. Heaters can be mounted directly on any type of surface masonry, concrete, block, plastered walls, metal framework, etc. - using appropriate hardware.
4. All controls such as thermostat and contactor, when required must have the same explosion-proof rating as heater.
5. Do not install one unit above the other.
6. Units are mounted a minimum of 8” above the floor.
7. Heaters are mounted on wall in a horizontal position with terminal end at right. **Never** recess heater into wall.
8. **NOTE:** Article 500 of the National Electric Code (NEC) outlines requirements for installation of electrical equipment in hazardous (classified) locations.
9. All unit electrical installation fittings, conduit, wiring and seals must meet NEC and local codes for hazardous locations. External line fusing or circuit breaker protection is required.
10. Failure to understand and follow these installation instructions and the “WARNING” notes contained therein may result in severe personal injury, death or substantial property damage.

⚠WARNING

ELECTRIC SHOCK HAZARD. Any installation involving electric heaters must be performed by a qualified person and must be effectively grounded in accordance with the National Electrical Code to eliminate shock hazard.

SAVE THESE INSTRUCTIONS

INSTALLATION

⚠WARNING

ELECTRIC SHOCK HAZARD. Disconnect all power before installing or servicing heater. Failure to do so could result in personal injury or property damage. Heater must be installed by a qualified person in accordance with the National Electrical Code, NFPA 70.

Note: Heaters can be mounted individually end to end. Heaters can be mounted directly on any type of surface (masonry, concrete, block, plastered walls, metal framework, etc.) using appropriate hardware.

1. Remove front panel by removing screws.
2. Locate desired heater position on wall.
3. Locate mounting holes for rear panel. Rear panel must be a minimum of 8” from the floor.
4. Refer to Figure 1A, 1B or 1C for mounting hole layout for each cabinet size.
5. Drill a pilot hole in wall mounting surface at each mounting hole location. Use a convenient small size drill.
6. Drill the mounting holes in accordance with size in Table 1. Insert anchors where applicable.
7. Fasten rear panel to wall with screws noted in table 1.
8. Replace front panel and screws.

⚠WARNING

Never operate heater with front panel off. Adequate air flow across heating elements requires the front panel to be in place. The heating elements could overheat, causing equipment damage or personal injury.

INSTALLATION

G SERIES MODELS WITHOUT CONTROLS — GROUPS B, C AND D

Figure 1A

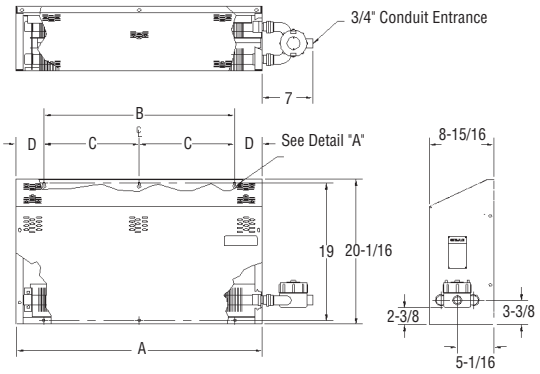

Dimensions (In.)

kW	A	B	C	D
1.6 1.8 3.6	34	20	10	7
3.2 7.6	58	32	16	13
4.0 4.5 9.0	70	48	24	11

G SERIES MODELS WITH BUILT-IN CONTROLS — GROUPS B, C AND D

Figure 1B

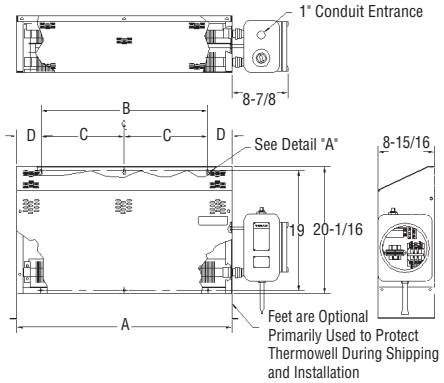

Dimensions (In.)

kW	A	B	C	D
1.6 1.8 3.6	34	20	10	7
3.2 7.6	58	32	16	13
4.0 4.5 9.0	70	48	24	11

G SERIES MODELS WITH THERMOSTAT ONLY — GROUPS C AND D

Figure 1C

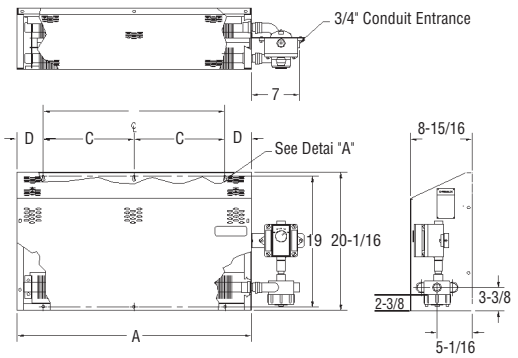

Dimensions (In.)

kW	A	B	C	D
1.6 1.8 3.6	34	20	10	7
3.2 7.6	58	32	16	13
4.0 4.5 9.0	70	48	24	11

Table 1 — Suggested Heater Mounting Screws — Types and Sizes

Type of Mounting Surface	** Accessory Hardware	Screw Type	Drill Size and Type	Screw Size to Fit Mtg Hole Size
Concrete Block Masonry	Ackerman	Rd. Hd. Mach. Steel	1/2” Masonry	† 1/4” x 20 x.....lg
	Lead Anchor	Rd. Hd. Mach Steel or Pan Hd. Metal (Self Tapping)	5/16” Masonry	† # 1/4” x .....lg
Wood Studs	— —	Wood or Metal (Self Tapping)	— —	† # 1/4” x .....lg
Plaster wall Hollow or Similar Type	— —	Toggle Bolt	#7 Twist	† # 1/4” x .....lg
* Metal Beam, Channel, etc.	Nuts Washers	Rd. Hd. Mach. Steel	#7 Twist	† 1/4” x 20 x.....lg

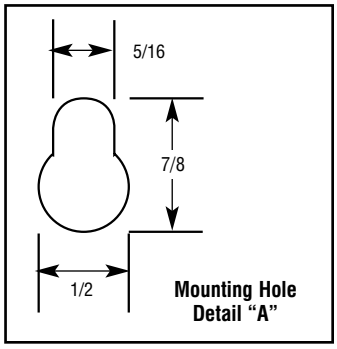

*If clearance permits use washer, lockwasher and nut; otherwise drill and tap to these lengths add thickness of beam, washers, nut, etc.
**If mounting structure permits. Except plastered hollow walls explosive type anchors can be used. Suggested size noted in Table and/or sketches be used to determine size of anchors.
†Select overall length of screw to provide a minimum penetration of 1 inch into base wall material.

WIRING

⚠WARNING

ELECTRIC SHOCK HAZARD. Any installation involving electric heaters must be performed by a qualified person and must be effectively grounded in accordance with the National Electrical Code to eliminate shock hazard.

1. All wiring should be done in accordance with local codes and the National Electrical Code by a qualified person as defined in the NEC.
   CAUTION: ***Use copper conductors only.***
2. Rough-in-line-wiring to unit in manner approved for hazardous locations. (See warning below.)
3. Wire per diagrams 1 through 6 based on the rating and control options listed in table 2. Refer to table 3 for amperage specifications.
4. Remove cover of conduit box for connections. Use either opening and plug the other with the plug provided.
5. In single phase units the heaters must be wired in parallel, combining L1 to L1, L2 to L2 and for 3 phase unit, L3 to L3.
6. Re-assemble cover with a minimum of 7 turns.

⚠WARNING

FIRE/EXPLOSION HAZARD. (Group B atmospheres) To prevent ignition of Group B atmospheres, conduit runs must not exceed 3/4" in size and all conduit runs 1/2" size and larger must have a sealing fitting connected within 2", 6" or 18" of the terminal enclosure depending on the exact model. For correct placement, refer to data located on the enclosure label.

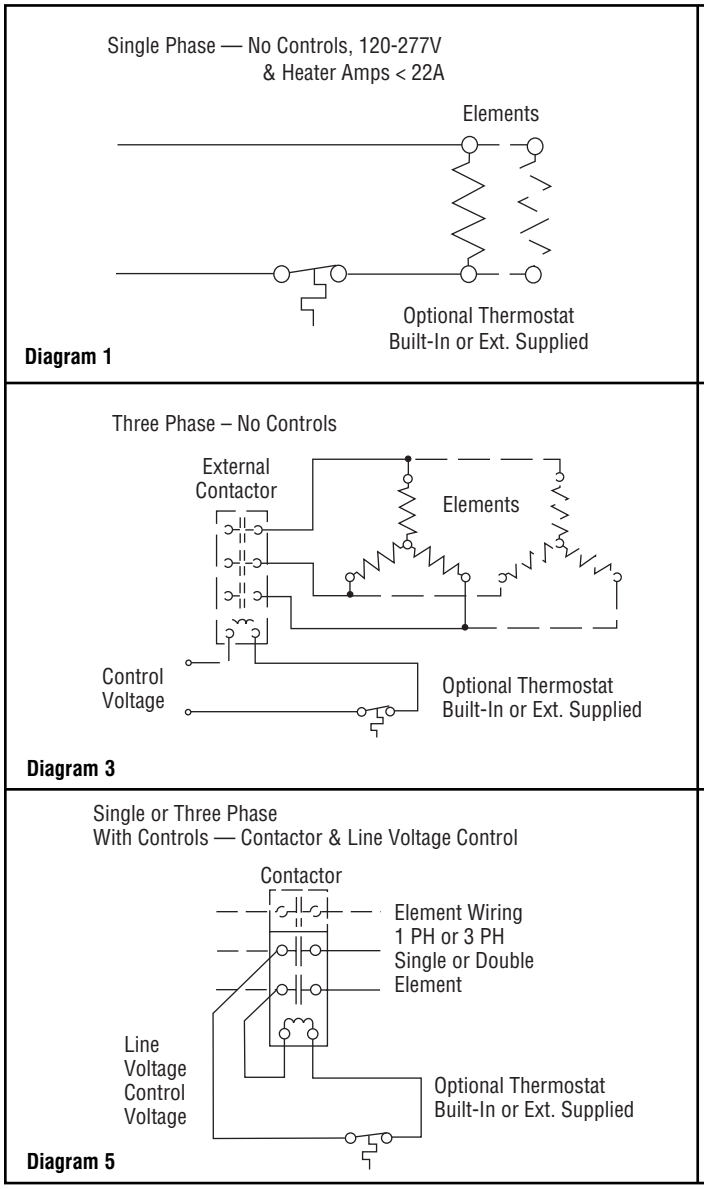

OPERATION

⚠CAUTION

The system designer is responsible for the safety of this equipment and should install adequate back-up controls and safety devices with their electric heating equipment. Where the consequences of failure could result in personal injury or property damage, back-up controls are essential.

1. Do not operate heater at voltages in excess of that stamped on the heater since excess voltage will shorten heater life and cause high element temperatures which may exceed allowable temperatures of operation in a hazardous atmosphere.

MAINTENANCE

⚠WARNING

ELECTRIC SHOCK HAZARD. Disconnect all power before installing or servicing heater. Failure to do so could result in personal injury or property damage. Heater must be installed by a qualified person in accordance with the National Electrical Code, NFPA 70.

1. Before activating for next heating season, vacuum or use compressed air to remove accumulated dust or lint, which otherwise may restrict proper air flow.
2. Periodically check all electrical connections and retighten to avoid electrical wiring difficulties.
3. Check to ensure terminal cover is tightly closed, before energizing.

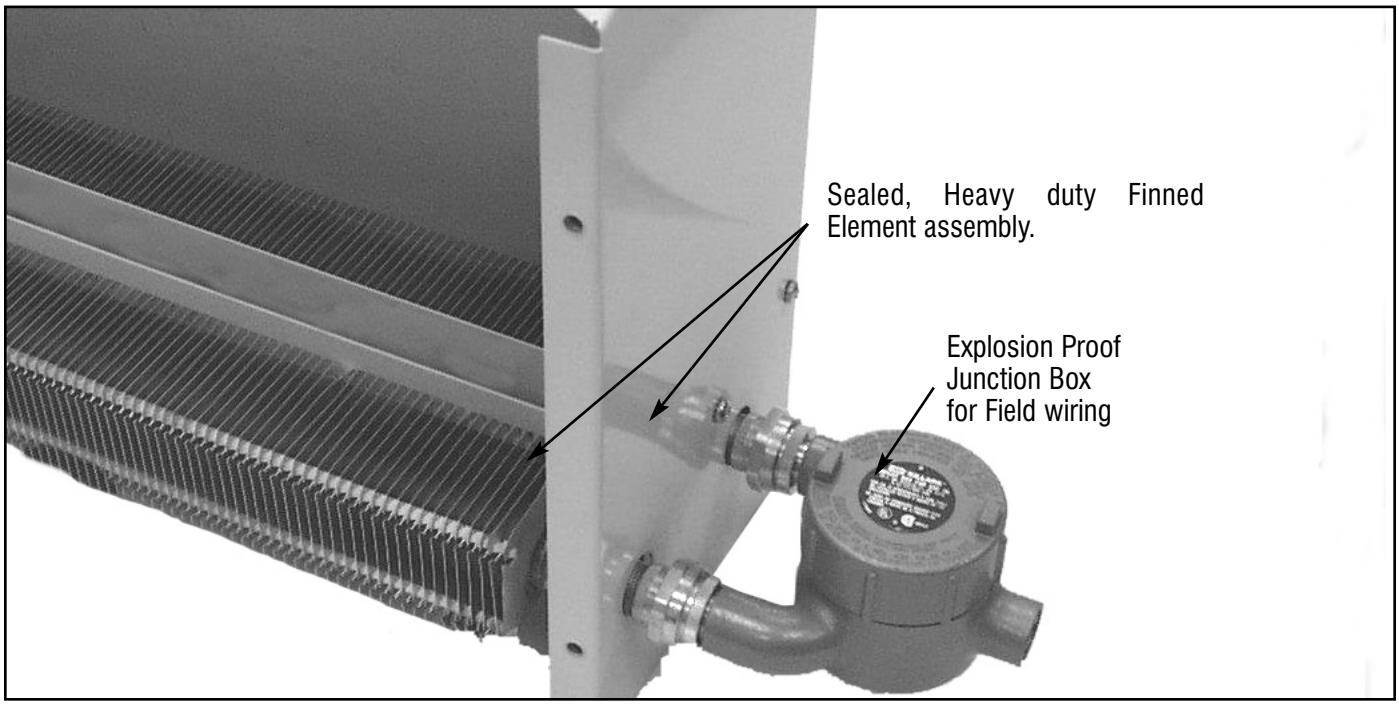

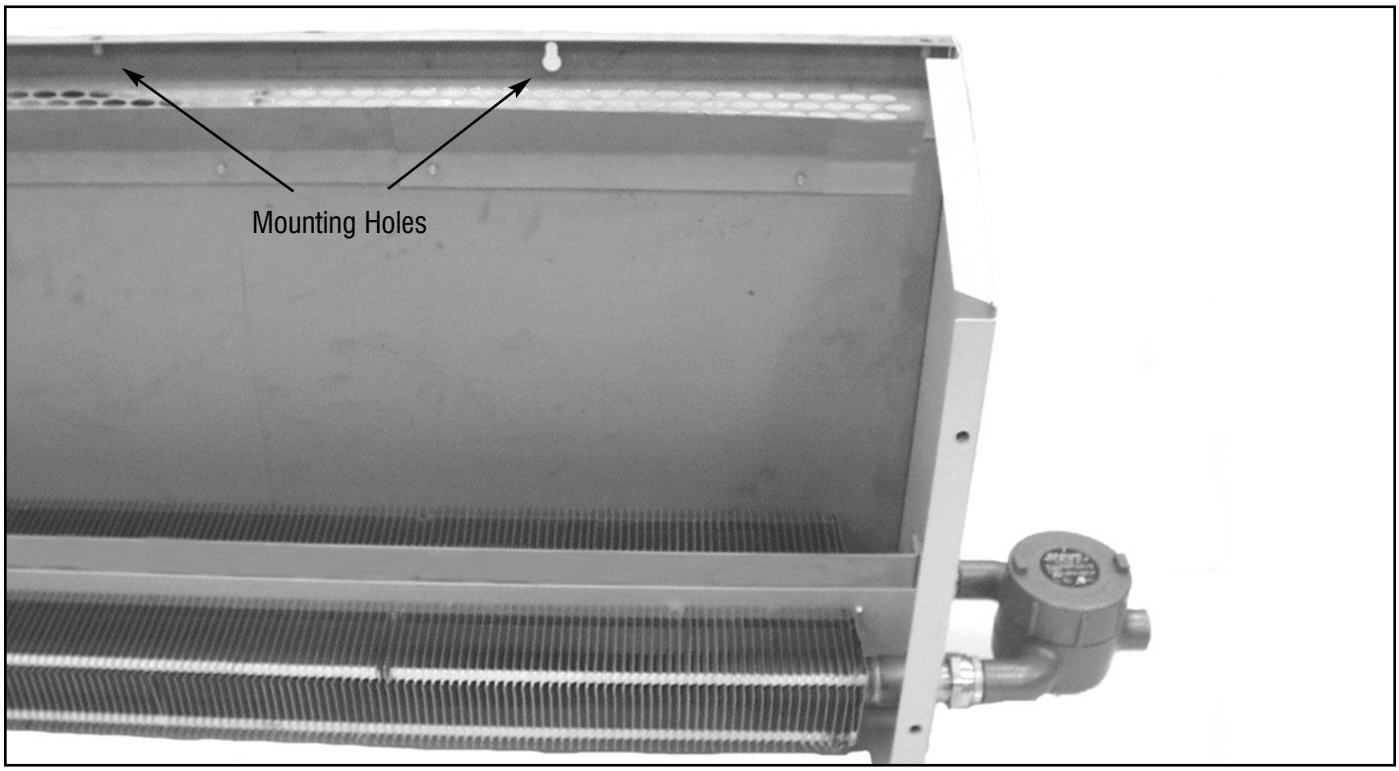

RENEWAL PARTS IDENTIFICATION

Model

G-Series — **Explosion Proof Convection Heater**

G	Code	kW	ID Number	Temperature Rating °F	Temperature Rating °C	(BTU)
	160	1.6	T3A	356	180	5,500
	180	1.8	T2A	536	280	6,150
	320	3.2	T3A	356	180	11,000
	360	3.6	T2A	536	280	12,300
	400	4.0	T3A	356	180	13,600
	450	4.5	T2A	536	280	15,350
	760	7.6	T2A	536	280	25,930
	900	9.0	T2A	536	280	30,700

Code	Voltage	Maximum kW Allowable
0	120	1.8
4	240	9.0
38	380	9.0
48	480	9.0
6	600	9.0
7	277	9.0
8	208	9.0

Code	Phase
1	1Ø
3	3Ø (Not available in 120, 277V)

Code	Control Combination: Contactor Coil	Control Combination: Transformer Secondary
CX	None	None
CX*	24 Volt	24 Volt
	120 Volt	120 Volt

Code	Temperature Control
	None
TB	Thermostat 40 - 90°F Group B, C & D
T	Thermostat Group C & D 50 - 90°F

G	760	48	3	CX	T	

Note: Letter “B” will appear after phase code to indicate engineering version.

TABLE 2 — TEMPERATURE SPECIFICATIONS
DIMENSIONS REPLACEMENTS ELEMENTS REQUIREMENTS

Temperature Rating T3A 356°F (180°C) Common To Units W & W/O Suffix B

kW	BTU	Volts	Phase	Amps	Model	Width A	Height B	Depth C	Wt. (Lbs.)	Element P/N	Qty.
1.6	5,500	208	1	7.7	G16081	34”	20”	9”	58	003-304650-002	2
1.6	5,500	208	3	4.4	G16083	34”	20”	9”	58	003-304650-005	2
1.6	5,500	240	1	6.7	G16041	34”	20”	9”	58	003-304650-096	2
1.6	5,500	240	3	3.8	G16043	34”	20”	9”	58	003-304650-006	2
1.6	5,500	277	1	5.8	G16071	34”	20”	9”	58	003-304650-004	2
1.6	5,500	480	1	3.3	G160481	34”	20”	9”	58	003-304650-091	2
1.6	5,500	480	3	1.9	G160483	34”	20”	9”	58	003-304650-009	2
1.6	5,500	575	3	1.6	G16063	34”	20”	9”	58	003-304650-010	2
3.2	11,000	208	1	15.4	G32081	58”	20”	9”	94	003-304650-023	2
3.2	11,000	208	3	8.9	G32083	58”	20”	9”	94	003-304650-026	2
3.2	11,000	240	1	13.3	G32041	58”	20”	9”	94	003-304650-097	2
3.2	11,000	240	3	7.7	G32043	58”	20”	9”	94	003-304650-027	2
3.2	11,000	277	1	11.6	G32071	58”	20”	9”	94	003-304650-025	2
3.2	11,000	480	1	6.7	G320481	58”	20”	9”	94	003-304650-093	2
3.2	11,000	480	3	3.8	G320483	58”	20”	9”	94	003-304650-030	2
3.2	11,000	575	3	3.2	G32063	58”	20”	9”	94	003-304650-031	2
4.0	13,600	208	1	19.2	G40081	70”	20”	9”	112	003-304650-045	2
4.0	13,600	208	3	11.1	G40083	70”	20”	9”	112	003-304650-048	2
4.0	13,600	240	1	16.7	G40041	70”	20”	9”	112	003-304650-046	2
4.0	13,600	240	3	9.6	G40043	70”	20”	9”	112	003-304650-049	2
4.0	13,600	277	1	14.4	G40071	70”	20”	9”	112	003-304650-047	2
4.0	13,600	480	1	8.3	G400481	70”	20”	9”	112	003-304650-094	2
4.0	13,600	480	3	4.8	G400483	70”	20”	9”	112	003-304650-052	2
4.0	13,600	575	3	7.0	G40063	70”	20”	9”	112	003-304650-053	2

Temperature Rating T2A 536°F (280°C)

kW	BTU	Volts	Phase	Amps	Model	Width A	Height B	Depth C	Wt. (Lbs.)	Element P/N	Qty.
1.8/3.6	6,150/12,300	208	1	8.7/17.3	G(180)36081	34”	20”	9”	46/58	003-304650-034	1 or 2
1.8/3.6	6,150/12,300	208	3	5.0/10.0	G(180)36083	34”	20”	9”	46/58	003-304650-038	1 or 2
1.8/3.6	6,150/12,300	240	1	7.5/15.0	G(180)36041	34”	20”	9”	46/58	003-304650-098	1 or 2
1.8/3.6	6,150/12,300	240	3	4.3/8.7	G(180)36043	34”	20”	9”	46/58	003-304650-039	1 or 2
1.8/3.6	6,150/12,300	277	1	6.5/13.0	G(180)36071	34”	20”	9”	46/58	003-304650-036	1 or 2
1.8/3.6	6,150/12,300	480	1	3.8/7.5	G(180)360481	34”	20”	9”	46/58	003-304650-037	1 or 2
1.8/3.6	6,150/12,300	480	3	2.2/4.3	G(180)360483	34”	20”	9”	46/58	003-304650-042	1 or 2
1.8/3.6	6,150/12,300	575	3	1.8/3.6	G(180)36063	34”	20”	9”	46/58	003-304650-043	1 or 2
7.6	25,930	208	1	36.5	G76081	58”	20”	9”	94	003-304650-055	2
7.6	25,930	208	3	21.1	G76083	58”	20”	9”	94	003-304650-058	2
7.6	25,930	240	1	31.7	G76041	58”	20”	9”	94	003-304650-099	2
7.6	25,930	240	3	18.3	G76043	58”	20”	9”	94	003-304650-059	2
7.6	25,930	277	1	27.4	G76071	58”	20”	9”	94	003-304650-057	2
7.6	25,930	480	1	15.8	G760481	58”	20”	9”	94	003-304650-095	2
7.6	25,930	480	3	9.1	G760483	58”	20”	9”	94	003-304650-062	2
7.6	25,930	575	3	7.6	G76063	58”	20”	9”	94	003-304650-063	2
4.5/9.0	15,350/30,700	208	1	21.6/43.3	G(450)90081	70”	20”	9”	87/112	003-304650-065	1 or 2
4.5/9.0	15,350/30,700	208	3	12.5/25.0	G(450)90083	70”	20”	9”	87/112	003-304650-069	1 or 2
4.5/9.0	15,350/30,700	240	1	18.8/37.5	G(450)90041	70”	20”	9”	87/112	003-304650-100	1 or 2
4.5/9.0	15,350/30,700	240	3	10.8/21.7	G(450)90043	70”	20”	9”	87/112	003-304650-070	1 or 2
4.5/9.0	15,350/30,700	277	1	16.2/32.5	G(450)90071	70”	20”	9”	87/112	003-304650-067	1 or 2
4.5/9.0	15,350/30,700	480	1	9.4/18.8	G(450)900481	70”	20”	9”	87/112	003-304650-068	1 or 2
4.5/9.0	15,350/30,700	480	3	5.4/10.8	G(450)900483	70”	20”	9”	87/112	003-304650-073	1 or 2
4.5/9.0	15,350/30,700	575	3	4.5/9.0	G(450)90063	70”	20”	9”	87/112	003-304650-074	1 or 2

REPLACEMENT PARTS

Model Any Voltage	Front Cover Assembly	Rear Cover Assembly	Right Side Panel	Left Side Panel	Element Support Bracket
1.6, 1.8, 3.6 kW	207-304644-101	207-304644-001	207-304644-201	304-304644-301	027-304646-001
3.2, 7.6 kW	207-304644-102	207-304644-002	207-304644-201	304-304644-301	027-304646-001
4.0, 4.5, 9.0 kW	207-304644-103	207-304644-003	207-304644-201	304-304644-301	027-304646-001

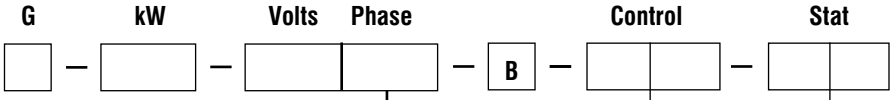

Code	Control Combination	
	Contactor Coil	Transformer Secondary
	None	None
CX	24 Volt	24 Volt
CX	120 Volt	120 Volt

Code	Phase
1	1Ø
3	3Ø

Code	Thermostat
	None
TB	300-049197-003
T	300-113075-002

Contactor		
Coil Voltage	30 Amp	50 Amp
24V	072-304551-001	072-304551-002
120V	072-304551-007	072-304551-008

Primary Voltage	Secondary Voltage	Transformer
208/240/480	24	315-304252-002
208/240/480	120	315-304252-001
277	24	315-304252-004
575	24	315-304252-005
277/575	120	315-304252-003

LIMITED WARRANTY

All products manufactured by Marley Electric Heating are warranted against defects in workmanship and materials for one year from date of installation. This warranty does not apply to damage from accident, misuse, or alteration; nor where the connected voltage is more than 5% above the nameplate voltage; nor to equipment improperly installed or wired or maintained in violation of the product's installation instructions. All claims for warranty work must be accompanied by proof of the date of installation.

The customer shall be responsible for all costs incurred in the removal or reinstallation of products, including labor costs, and shipping costs incurred to return products to Marley Electric Heating Service Center. Within the limitations of this warranty, inoperative units should be returned to the nearest Marley authorized service center or the Marley Electric Heating Service Center, and we will repair or replace, at our option, at no charge to you with return freight paid by Marley. It is agreed that such repair or replacement is the exclusive remedy available from Marley Electric Heating.

THE ABOVE WARRANTIES ARE IN LIEU OF ALL OTHER WARRANTIES EXPRESSED OR IMPLIED. AND ALL IMPLIED WARRANTIES OF MERCHANTABILITY AND FITNESS FOR A PARTICULAR PURPOSE WHICH EXCEED THE AFORESAID EXPRESSED WARRANTIES ARE HEREBY DISCLAIMED AND EXCLUDED FROM THIS AGREEMENT. MARLEY ELECTRIC HEATING SHALL NOT BE LIABLE FOR CONSEQUENTIAL DAMAGES ARISING WITH RESPECT TO THE PRODUCT, WHETHER BASED UPON NEGLIGENCE, TORT, STRICT LIABILITY, OR CONTRACT.

Some states do not allow the exclusion or limitation of incidental or consequential damages, so the above exclusion or limitation may not apply to you. This warranty gives you specific legal rights, and you may also have other rights, which vary, from state to state.

For the address of your nearest authorized service center, contact Marley Electric Heating in Bennettsville, SC, at 1-800-642-4328. Merchandise returned to the factory must be accompanied by a return authorization and service identification tag, both available from Marley Electric Heating. When requesting return authorization, include all catalog numbers shown on the products.

How to order repair parts:
In order to obtain any needed repair or replacement parts, warranty service or technical information, please contact the Marley Electric Heating Service Center toll-free by calling 1-800-642-HEAT.
When ordering replacement parts, always give the information listed as follows:

1. The Part Number
2. The Model Number
3. The Part Description
4. Date of Manufacture

Marley
Engineered Products
An SPX Company
470 Beauty Spot Road, E
Bennettsville, SC 29550 USA

PPD031
5200-2472-000

Rev. 1
TA - Q2 - EF
Litho in U.S.A.

Please read and save these instructions. Read carefully before attempting to assemble, install, operate or maintain the product described. Protect yourself and others by observing all safety information. Failure to comply with instructions could result in personal injury and/or property damage! Retain instructions for future reference.

Dayton® Fabricated Aluminum Direct Drive Exhaust Fans

Description

NOTE: Manufacturer assumes no obligation or liability on account of any unauthorized recommendations, opinions, or advice as to the choice, installation or use of products.

The Dayton heavy duty exhaust fan is for wall mounted applications. Each fan is equipped with a ball bearing, totally enclosed motor. Unit is furnished with painted steel venturi and fabricated aluminum propeller.

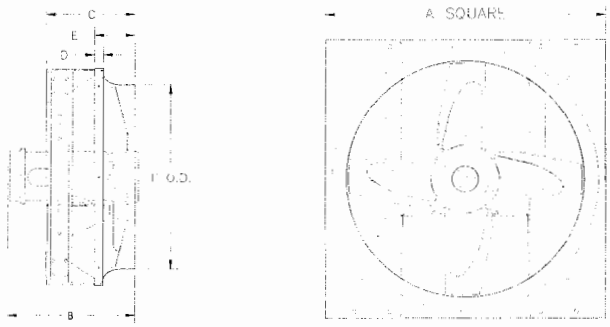

Figure 1 - Dimensions

Model	Propeller Dia.	A Sq.	B	C	D	E	F
3XK50F	12"	16"	14 13/16"	8 1/2"	1"	2 15/16"	12 1/4"
*3XK51F	12	16	14 13/16	8 1/2	1	2 15/16	12 1/4
*3XK37F	16	20	14 1/16	7 7/8	1	3 9/16	16 5/16
3XK52F	16	20	14 1/16	7 7/8	1	3 9/16	16 5/16
3XK53F	16	20	12 13/16	7 7/8	1	3 9/16	16 5/16
3XK54F	18	22	14 11/16	9	1 1/16	4 1/16	18 5/16
*3XK55F	18	22	14 11/16	9	1 1/16	4 1/16	18 5/16
3XK56F	18	22	13 7/16	9	1 1/16	4 1/16	18 5/16
3XK57F	20	24	15 3/8	9 7/8	1	4 1/2	20 3/8
3XK58F	20	24	14 1/4	9 7/8	1	4 1/2	20 3/8
*3XK59F	20	24	15 3/8	9 7/8	1	4 1/2	20 3/8
3XK60F	24	28	11 7/8	11 1/16	1	4 15/16	24 7/16
*3XK61F	24	28	11 7/8	11 1/16	1	4 15/16	24 7/16
3XK62F	24	28	11 7/8	11 1/16	1	4 15/16	24 7/16
3XK63F	24	28	11 7/8	11 1/16	1	4 15/16	24 7/16
*3XK64F	24	28	11 7/8	11 1/16	1	4 15/16	24 7/16
3XK66F	30	34	14	12 5/8	1 1/16	5 5/8	30 1/2
3XK67F	30	34	14	12 5/8	1 1/16	5 5/8	30 1/2

(*)These units are UL Listed fans for use in hazardous locations, refer to NEC Class and Group Ratings for Hazardous Location Exhaust Fans chart.

c UL us **U.L. Listed**

Unpacking

Receiving and Inspection. Immediately upon receipt of shipment, carefully inspect for damage and/or shortage. Turn the impeller by hand to see that it turns freely and does not bind. If any damage and/or shortage is detected or suspected, the carrier must be notified to conduct an inspection. The customer should not accept shipment without a notation on the delivery receipt indicating items not delivered or the apparent extent of damage.

When shipment is opened and damage is found which was not evident externally (concealed damage), it is mandatory that the customer request an immediate inspection by the carrier. Report any damage to the carrier within 15 days. Failure to report damage within the above time limit could result in rejection of claim.

Handling. When handling fans and their accessories, always use equipment and methods that will not cause damage. To avoid damage fans should be lifted using slings and padding or spreaders.

NEC Class and Group Ratings for Hazardous Location Exhaust Fans

Exhaust Model	Class I Groups	Class II Groups
3XK51	D	F & G
3XK37	D	F & G
3XK55	C & D	F & D
3XK59	C & D	F & D
3XK61	C & D	F & G
3XK64	C & D	F & G

Dayton® Fabricated Aluminum Direct Drive Exhaust Fans

⚠ CAUTION ***Always make sure that all lifting and handling equipment and techniques conform to current safety standards.***

Avoid lifting fans in a way that will bend or distort fan parts. Never pass slings or timbers through the fan orifice.

Storage. Fans are protected against damage during shipment. If they cannot be installed and put into operation immediately upon receipt, certain precautions are necessary to prevent deterioration during storage. Responsibility for integrity of fans and accessories during storage must be assumed by the user. The manufacturer will not be responsible for damage during storage. These suggestions are provided solely as a convenience to the user, who shall make his own decision as to whether to use any or all of them.

Indoor Storage. The ideal storage environment for fans and accessories is indoors, above grade, in a low humidity atmosphere which is sealed to prevent the entry of blowing dust, rain, or snow. Temperatures should be evenly maintained at between 70°F and 105°F (wide temperature swings may cause condensation and "sweating" of metal parts). Windows should be covered to prevent temperature variations caused by sunlight. Provide thermometers and humidity indicators at several points and maintain the atmosphere at 40% relative humidity, or lower.

It may be necessary to use desiccant or a portable dehumidifier to remove moisture from the air in the storage enclosure.

Thermostatically controlled portable heaters (vented to outdoors) may be required to maintain even temperatures inside the enclosure.

⚠ CAUTION ***Provide fire extinguishers, fire alarms, or emergency response communication to protect building and equipment against fire damage. Be sure that building and storage practices meet all local, state and federal fire and safety codes.***

The following fans or accessories must be stored indoors, in a clean dry atmosphere:

a. Propeller wall fans not in wall housings.

b. Any fan protected by a cardboard carton.

c. Motors dismounted from fans.

d. Spare wheels or propellers.

e. Belts, sheaves, bushings and other parts when not mounted on fan.

f. Boxes, bags or cartons of hardware.

g. Curbs

h. Shutters

Remove any accumulations of dirt, water, ice or snow and wipe dry before moving to indoor storage. Allow cold parts to reach room temperature to avoid "sweating" of metal parts. Open boxes or cartons. Remove any accumulated moisture; if necessary use portable electric heaters to dry parts and packages. Leave coverings loose to permit air circulation and to permit periodic inspection.

Rotate impeller by hand to distribute bearing grease over the entire bearing surfaces.

Store at least 3 ½" above the floor on wooden blocks covered with moisture proof paper or polyethylene sheathing. Provide aisles between parts and along all walls to permit air circulation and space for inspection.

Outdoor Storage. Fans designed for outdoor use may be stored outdoors, if absolutely necessary. The storage area should be reasonably level and drained or ditched to prevent accumulation of water. Fencing and lighting for security are desirable. Roads or aisles for portable cranes and hauling equipment are needed. Consider the use of drift fencing to minimize accumulation of blowing snow or dirt.

The following fans may be stored outdoors, if dry indoor storage space is not available:

a. Fans intended for outdoor use that are crated in wood.

b. Wall fans installed in wall housings.

All fans must be supported on wooden blocks or timbers above water or normal snow levels. Provide enough blocking to prevent settling into soft ground. Fans should be set in place using the directional arrow markings on the crate as a guide.

Locate pieces far enough apart to permit air circulation, sunlight, and space for periodic inspection. Place all parts on their supports so that rain water will run off, or to minimize water accumulation.
IMPORTANT: Do not cover parts with plastic film or tarps — these cause condensation of moisture from the air passing through heating and cooling cycles.

Fan impellers should be blocked to prevent spinning caused by strong winds.

Inspection and Maintenance During Storage. Inspect fans and accessories at least once per month, while in storage. Log results of inspection and maintenance performed. A typical log entry should include the following:

a. Date

b. Inspector's Name

c. Name of Fan

d. Location

e. Condition of Paint or Coating

f. Is moisture present?

Models 3XK51F, 3XK37F, 3XK55F, 3XK59F, 3XK61F, 3XK64F, 3XK50F, 3XK52F, 3XK54F, 3XK57F, 3XK60F, 3XK62F, 3XK66F, 3XK53F, 3XK56F, 3XK58F, 3XK63F, 3XK67F

g. Is dirt accumulated?

h. Corrective steps taken?

If moisture or dirt accumulations are found on parts, the source should be located and eliminated. Fan impellers should be rotated at each inspection by hand ten to fifteen revolutions to redistribute the motor and bearing lubricant.

If paint deterioration begins, consideration should be given to touch-up or repainting. Fans with special coatings may require special techniques for touch-up or repair.

Machined parts coated with rust preventive should be restored to good condition promptly if signs of rust occur. The most critical items are pulleys, shafts and bearing locking collars. At the first sign of rusting on any of the above parts, remove the original rust preventive coating with petroleum solvent and clean lint-free cloths. Polish any remaining rust from surfaces with crocus cloth or fine emery paper and oil.
IMPORTANT: Do not destroy the continuity of the surfaces. Wipe clean with lint-free cloths and recoat surfaces evenly and thoroughly with Tectly 506 (Ashland Oil Company) or equal. For hard to reach internal surfaces or for occasional use, consider using Tectly 511M Rust Preventive or WD40 or equal.

Removing from Storage. As fans are removed from storage to be installed in their final location, they should be protected and maintained in similar fashion, until the fan equipment goes into operation.

General Safety Information

1. Follow all local electrical and safety codes, as well as the National Electrical Code (NEC) and the Occupational Safety and Health Act (OSHA) in the United States.
2. Motor must be securely and adequately grounded. This can be accomplished by wiring with a grounded, metal-clad raceway system by using a separate ground wire connected to the bare metal of the motor frame, or other suitable means.
3. Always disconnect power source before working on or near a motor or its connected load. If the power disconnect point is out-of-sight, lock it in the open position and tag to prevent unexpected application of power.
4. All moving parts should be guarded.
5. Be careful when touching the exterior of an operating motor - it may be hot enough to be painful or cause injury. With modern motors this condition is normal if rated at normal load and voltage - modern motors are built to operate at higher temperatures.
6. Make certain that the power source conforms to the requirements of your equipment.
7. Wiping or cleaning rags and other flammable waste materials must be placed in a tightly closed metal container and disposed of later in the proper fashion.
8. When cleaning electrical or electronic equipment, always use an approved cleaning agent such as dry cleaning solvent.

Installation

1. The fan should be securely mounted within a rigid framework to prevent flexing or movement of the fan frame during operation. The fan frame should be equally supported on all sides within the framework and caution should be taken to avoid twisting or cocking of the fan frame during installation.

   Allowing the fan frame to flex or move during operation will create harmful vibrations which may damage the unit.
2. Fans should be mounted in opening within ¼" clearance around perimeter. Venturi framing should be secured to building structure utilizing corrosion resistant fasteners.
3. Check rotation after wiring of ventilator to be sure propeller rotates clockwise when facing motor shaft.
4. Dampers, if used, must be mechanically operated and clear propeller by at least 2". Fan motor could overheat if operated with damper in closed position.

⚠ CAUTION ***This fan has rotating parts. Exercise applicable safety precautions during its handling, assembly, operation and maintenance. Disconnect power before handling, assembling, operating or maintaining. If disconnect means is out of sight, lock it in the open position to prevent unexpected starts.***

⚠ WARNING ***Do not use in hazardous environments where the fan's electrical system could provide ignition to combustible or flammable materials, unless the unit is specifically built for hazardous environments.***

⚠ WARNING ***Install and operate the fan so that the air surrounding the fan at any time must be free of flammable gases, vapors or liquids, combustible dust or ignitable fibers or flyings.***

⚠ CAUTION ***Guards must be installed when the fan is within reach of personnel or within eight (8) feet (2.5 m) of working level or when deemed advisable for safety.***

⚠ CAUTION ***Before proceeding, make sure electrical service to the fan is locked in the "OFF" position.***

Dayton®

Dayton® Fabricated Aluminum Direct Drive Exhaust Fans

⚠WARNING ***Check the voltage at the fan to see if it corresponds with the motor nameplate. High or low voltage can seriously damage the motor. Extra care should be taken when wiring two speed motors since improper connections will damage the motor and void the motor warranty.***

Apply power momentarily and compare the rotation of the impeller with the directional arrow on fan.

⚠WARNING ***Operation in the wrong direction will deliver air but will overload the motor to the extent of blowing fuses and seriously damaging the motor. In the case of three phase motors, the direction can be changed by interchanging any two of the three motor leads. In the case of single phase motors, the reversing instructions will appear on the wiring diagram in the motor wiring compartment.***

Maintenance

1. Periodically clean any guards, dampers, motors, and propeller to prevent decrease in airflow and overheating motor, and make sure all bolts are tight.
2. Under normal usage, no spare parts are recommended for one year of operation. Motor bearings are prelubricated. Consult information printed on motor for lubrication instructions.

⚠ CAUTION ***Before proceeding, make sure electrical service to the fan is locked in the "OFF" position.***

⚠WARNING ***Even when the power supply is locked out, fans may cause injury or damage if the impeller is subject to "windmilling" which is the turning of the impeller and drive components due to a draft in the system. To guard against this hazard, the impeller should be secured to physically restrict rotational movement.***

Set Screw Tightening Schedule

1. Before initial operation of the fan, tighten set screws according to the procedure outlined below.
2. After 500 operating hours or three months, whichever comes first, tighten set screws to the full recommended torque.
3. At least once a year, tighten set screws to the full recommended torque.

Procedure for Tightening Set Screws in Bearings and Hubs

One Set Screw Application

Using a torque wrench, tighten the set screw to the torque recommended in Table 1.

Two Set Screw Application

1. Using a torque wrench, tighten one set screw to half of the torque recommended in Table 1.
2. Tighten the second set screw to the full recommended torque.
3. Tighten the first set screw to the full recommended torque.

Table 1. Recommended Tightening Torque for Set Screws

Set Screw Diameter	Torque (in-lbs)
#10	35
1/4	80
5/16	126
3/8	240
7/16	384
1/2	744
9/16	1080
5/8	1500
3/4	2580
7/8	3600
1	5400

Variable Frequency Drives and Motors

There are occasions when a Variable Frequency Drive (VFD) will cause poor motor performance and possible damage. To avoid these problems, the manufacturer recommends the following:

1. Select compatible motor and VFD converter; if possible, the motor and the converter should be from the same manufacturer or at least the converter selected should be recommended by the motor manufacturer.
2. A motor shaft grounding system should be used to prevent motor bearing damage from eddy currents.

NOTE: The manufacturer will not honor motor warranty claims if the customer fails to follow these recommendations.

Models 3XK51F, 3XK37F, 3XK55F, 3XK59F, 3XK61F, 3XK64F, 3XK50F, 3XK52F, 3XK54F, 3XK57F, 3XK60F, 3XK62F, 3XK66F, 3XK53F, 3XK56F, 3XK58F, 3XK63F, 3XK67F

LIMITED WARRANTY

WARRANTY AND DISCLAIMER: *Dayton® extends this limited warranty by the manufacturer to the original purchaser and warrants that Dayton® products shall be free from original defects in workmanship and materials for one year from date of shipment, provided same have been properly handled, stored, installed, serviced, maintained and operated. This warranty shall not apply to products which have been altered or repaired in any way so as, to affect performance or reliability, nor which have been improperly installed or subjected to misuse, negligence, or accident, or incorrectly used in combination with other substances. The Purchaser assumes all risks and liability for results of use of all products.*

PROMPT DISPOSITION. *Dayton will make a good faith effort for prompt correction or other adjustment with respect to any product which proves to be defective within limited warranty. For any product believed to be defective within limited warranty, first write or call dealer from whom the product was purchased. Dealer will give additional directions. If unable to resolve satisfactorily, write to Dayton at address below, giving dealer's name, address, date, and number of dealer's invoice, and describing the nature of the defect. Title and risk of loss pass to buyer on delivery to common carrier. If product was damaged in transit to you, file claim with carrier.*

Dayton® is not responsible for the cost of removal of the defective product or part, damages due to removal, or any expenses incurred in shipping the product or part to or from Dayton®, or the installation of the repaired or replaced product or part.

The warranties set forth above do not apply to any components, accessories, parts or attachments manufactured by other manufacturers; such being subject to the manufacturer's warranty, if any. To the extent not prohibited by the manufacturer's warranty, Dayton® shall pass through to Purchaser such manufacturer's warranty.

DAYTON®'S WARRANTY IS IN LIEU OF ALL OTHER WARRANTIES, EXPRESS OR IMPLIED, ARISING BY LAW OR OTHERWISE, INCLUDING WITHOUT LIMITATION THE IMPLIED WARRANTIES OF MERCHANTABILITY AND FITNESS FOR A PARTICULAR PURPOSE, WHICH ARE HEREBY EXPRESSLY DISCLAIMED AND WAIVED. THIS WARRANTY CONSTITUTES DAYTON®'S SOLE AND EXCLUSIVE WARRANTY FOR DEFECTIVE GOODS AND PURCHASER'S SOLE AND EXCLUSIVE REMEDY FOR DEFECTIVE PRODUCTS.

No employee, agent, dealer, or other person is authorized to give any warranties on behalf of Dayton® or to assume for Dayton® any other liability in connection with any of its products except in writing and signed by an officer of Dayton®.

TECHNICAL ADVICE AND RECOMMENDATIONS, DISCLAIMER: *Notwithstanding any past practice or dealings or any custom of the trade, sales shall not include the furnishing of technical advice or assistance or system design.*

Dayton® assumes no obligation or liability on account of any unauthorized recommendations, opinions or advice as to the choice, installation or use of products.

LIMITATION OF LIABILITY *The cumulative liability of Dayton® to the Purchaser and any other persons for all claims in any way relating to or arising out of the products, including, but not limited to, any cause of action sounding in contract, tort, or strict liability, shall not exceed the total amount of the purchase price paid for those products which are the subject of any such claim. This limitation of liability is intended to apply without regard to whether other provisions of this agreement have been breached or have proven ineffective even if Dayton® has been advised of the possibility of such claims or demands. In no event shall Dayton® be liable to the Purchaser or any other person for any loss of profits or any incidental, special, exemplary, or consequential damages for any claims or demands brought by the Purchaser or such other persons.*

INDEMNITY *Dayton®'s maximum liability to Purchaser and to any end user is as set forth above. Dayton® makes no warranty to anyone for any products not manufactured by Dayton® and shall have no liability for any use or installation of any products (whether manufactured by Dayton® or other manufacturers) not specifically authorized by this sale. Purchaser acknowledges various warnings by Dayton® regarding the products and its installation and use. If Dayton® incurs any claims, lawsuits, settlements, or expenses (including attorney fees) for any loss, injury, death or property damage including, but not limited to, claims arising out of the Purchaser's or any end user's installation or use of the products, the Purchaser shall indemnify and hold Dayton® harmless.*

Manufactured for Dayton Electric Mfg. Co., 5959 W. Howard St., Niles, Illinois 60714 U.S.A.

Dayton®

For Repair Parts, call 1-800-323-0620

24 hours a day - 365 days a year

Please provide following information:
-Model number
-Serial number (if any)
-Part descriptions and number as shown in parts list

Address parts correspondence to:
Grainger Parts
P.O. Box 3074
1657 Shermer Road
Northbrook, IL 60065-3074 U.S.A.

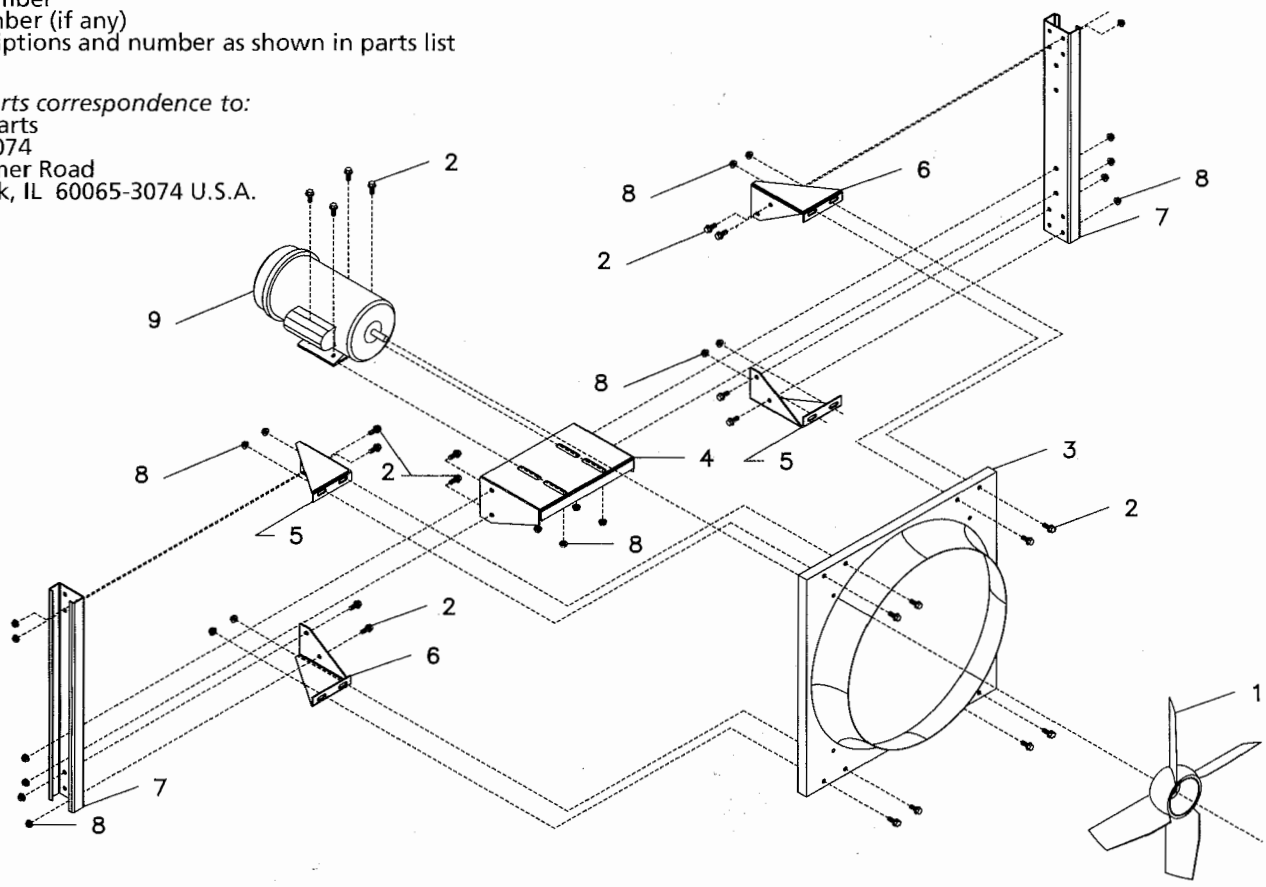

Figure 2 - Repair Parts Illustration

Ref. No.	Description	Part Numbers for Models									Qty.
		3XK50F	3XK51F	3XK37F	3XK52F	3XK53F	3XK54F	3XK55F	3XK56F	3XK57F	
1	Propeller Assembly	506524	506524	506545	506545	506545	506559	506559	506559	506549	1
2	Bolt 5/16" -18 x 3/4" Whiz Lock	*	*	*	*	*	*	*	*	*	–
3	Orifice	506000	506000	506001	506001	506001	506002	506002	506002	506003	1
4	Motor Base	506063	506063	506064	506064	506064	506056	506056	506056	506056	1
5	Right Bracket	**	**	**	**	**	506057	506057	506057	506059	2
6	Left Bracket	**	**	**	**	**	506058	506058	506058	506060	2
7	Channel Support	**	**	**	**	**	506061	506061	506061	506062	2
8	Nut 5/16" - 18 Whiz Lock	*	*	*	*	*	*	*	*	*	–
9	Motor	994224	921745	921745	994224	921755	922253	922254	922255	922767	1

Ref. No.	Description	Part Numbers for Models									Qty.
		3XK58F	3XK59F	3XK60F	3XK61F	3XK62F	3XK63F	3XK64F	3XK66F	3XK67F	
1	Propeller Assembly	506549	506549	506551	506551	506554	506554	506551	506552	506552	1
2	Bolt 5/16" -18 x 3/4" Whiz Lock	*	*	*	*	*	*	*	*	*	–
3	Orifice	506003	506003	506004	506004	506004	506004	506004	506005	506005	1
4	Motor Base	506056	506056	506056	506056	506056	506056	506056	506068	506068	1
5	Right Bracket	506059	506059	506049	506049	506049	506049	506049	506065	506065	2
6	Left Bracket	506060	506060	506111	506111	506111	506111	506111	506066	506066	2
7	Channel Support	506062	506062	506048	506048	506048	506048	506048	506067	506067	2
8	Nut 5/16" - 18 Whiz Lock	*	*	*	*	*	*	*	*	*	–
9	Motor	922729	922753	922767	922753	923280	923275	923254	923261	923246	1

(*)Standard hardware items, available locally.
(**) Not required for 3XK50F, 3XK51F, 3XK37F, 3XK52F, 3XK53F.

KILLARK Haz Loc Emergency Light, 13W, 120/277V

Lighting > Hazardous Location Fixtures > Hazardous Location Emergency/Exit Backup

Hazardous Location Emergency Light, Lamp Quantity 1, Lamp Type Fluorescent, Lamp Watts 13, Fixture Wattage 13, Voltage 120/277, Suggested Lamp Item No. 1PGW3, Yes Lamp Included, Hazardous Location Rated, Electronic Ballast Type, Ballast Quantity 1, Housing Material High Strength Polycarbonate, Housing Finish Gray, Mounting External Feet, Nickel-Cadmium Battery Type, 25 Hours Recharge Time, LED Charge Indicator Light, Ambient Temp. Range -4 to 104 Degrees F, Length 11.16 In., Width 7.87 In.

Grainger Item #	6JEN2
Brand	KILLARK
Mfr. Model #	NWPFE131330A

Tech Specs | Additional Information | Compliance & Restrictions | MSDS | Required Accessories | Optional Accessories | Alternate Products | Repair Parts

Item	Hazardous Location Emergency Light
Lamp Quantity	1
Lamp Type	Fluorescent
Lamp Watts	13
Fixture Wattage	13
Voltage	120/277
Suggested Lamp Item No.	1PGW3
Lamp Included	Yes
Description/Special Features	Hazardous Location Rated
Ballast Type	Electronic
Ballast Quantity	1
Housing Material	High Strength Polycarbonate
Housing Finish	Gray
Mounting	External Feet
Battery Type	Nickel-Cadmium
Recharge Time	25 Hours
Status Indicator	LED Charge Indicator Light
Ambient Temp. Range	-4 to 104 Degrees F
Length	11-5/32"
Width	7-7/8"
Height	4-15/32"
Standards	Class I, Div. 2, Groups A,B,C,D; Class I, Zone 2, Groups IIC, IIB, IIA; Class II, Div. I, Groups F,G; Class III; Marine; NEMA 3, 4, 4X, IP66

Accessories & Replacement Parts

Self Adhesive Decals

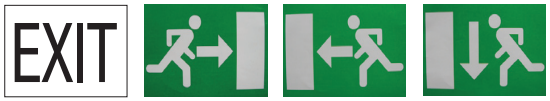

NWP-DECAL01 NWP-DECAL06 NWP-DECAL07 NWP-DECAL09

See KILLARK® catalog for additional styles available. Minimums apply.

BOLT-ON EXIT SIGN

Catalog Number NWP-EXIT-SIGN

DESCRIPTION

Bolt-on Exit Sign accessory includes hardware to mount to fixture and ability to make arrows left, right or none. Construction white painted steel and non-glass red diffuser, with bottom opening for downlight.

FIELD HUB KITS

Catalog #	Description
NWP-HUBA	Aluminum hub, gasket, locknut
NWP-HUBP	Precoated zinc hub, gasket, locknut
NWP-HUBS	Stainless steel hub, gasket, locknut
NWP-HUBM	M20 Plated Brass

NWP Replacement Parts & Lamps

Catalog #	Description
NWP-LENSONLY	Replacement Lens
NWP-KFBP7	Replacement battery pack
MQL- 13	13W Quad-pin lamp
MQL- 18	18W Quad-pin lamp
MQL- 26	26W Quad-pin lamp

Dimensional Information

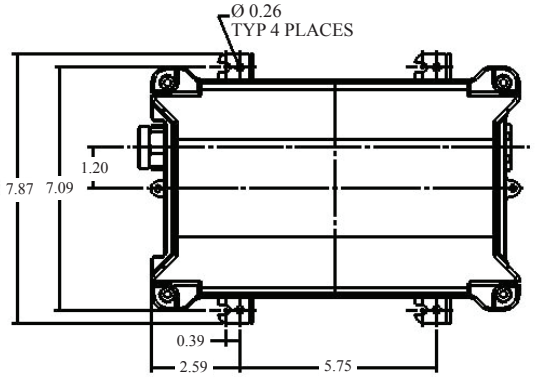

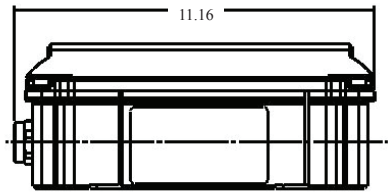

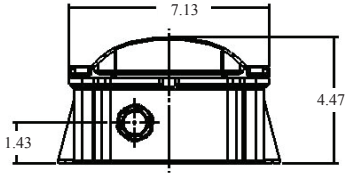

KEYHOLE SLOTS PROVIDED FOR EASE IN MOUNTING

HUBBELL®
KILLARK®
A Division of Hubbell Incorporated (Delaware)
3940 M.L. King Dr.
St. Louis, MO 63113
Tel: 314-531-0460 Fax: 314-531-7164
www.hubbell-killark.com

RACO® BELL® KILLARK® HAWKE® CHALMIT®

TF-NWP 0210 rev3

HUBBELL®
KILLARK®
A Division of Hubbell Incorporated (Delaware)

ENVIRORITE®

Surface Mount Luminaires

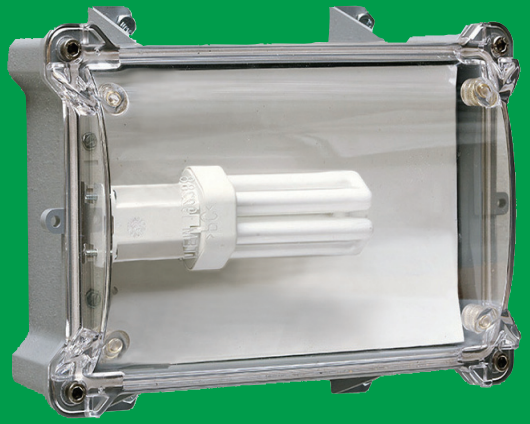

NWP Series Non-Metallic
13-26W Fluorescent

Emergency Versions Available

Wet, Harsh & Hazardous Locations

Distributed by:

NWP Series

Non-Metallic - Fluorescent

Class I, Div. 2, Groups A,B,C,D
Class I, Zone 2, Groups IIC, IIB, IIA
Class II, Div. I , Groups F,G; Class III
NEMA 4X, IP66 Rated

c SP us to the following standards:
- UL 1598 Standard for luminaires
- UL 844 Standard for lighting fixtures for hazardous locations
- CSA C22.2 no. 137-M1981 electric luminaires for use in hazardous locations
- Enclosed and gasketed
- NEMA 3, 4X IP66

ENVIRORITE®

Surface Mount Luminaires

Applications

Killark's NWP Series of fluorescent luminaires are designed for task lighting of wet & corrosive NEMA 4X environments and hazardous locations.

Typical uses include manufacturing plants, chemical and petrochemical processing facilities, sewage treatment plants, off-shore and dockside installations, agricultural, commercial, industrial, and mining facilities.

Features

- Non-metallic housing has a lightweight yet robust low profile construction
- Can be wall mounted or ceiling mounted in horizontal or vertical position
- Energy and labor saving fluorescent
- Emergency and normal power models available.
- Emergency version has internal battery which provides 90 minutes of illumination in the event of a power failure
- Resists corrosive effects of most chemicals, hydrocarbons and solvents
- Designed for indoor and outdoor applications
- Includes fluorescent lamp
- 'World Voltage' ballasts for 120VAC through 277VAC 50/60Hz installations
- Wiring terminals are included as standard

Materials

- Enclosure – High strength polycarbonate
- Gasket – Silicone
- External Hardware – Stainless steel
- Lens - Lexan®*
- Entry – One ¾" NPT copper-free aluminum hub with ¾ x ½" reducer is standard. A second hub may be purchased separately.

**Lexan®is a registered trademark of General Electric*

HUBBELL®

KILLARK®
A Division of Hubbell Incorporated (Delaware)

NWP Surface mount luminaires contain no exposed glass and carry Class II F&G ratings reqired for many food proccessing areas.

Catalog Number Logic NWP 00 - 00(00) - 00(00) -

Constant for NWP series

Power & Ballast Type
FN - Fluorescent Normal Power
FE - Fluorescent w/Battery Backup

Lamp Wattage
13-13W (AC Normal only operation)
18-18W (AC Normal only operation)
26-26W (AC or DC Normal only operation)
1313-13W (AC ballast w/battery backup)
1818-18W (AC ballast w/battery backup)
0013-13W Emergency only
0018-18W Emergency only
0026-26W Emergency only②

Supply (input) voltage
30 - 120-277V 50/60Hz
DC120 - FN26 c SP us
FE26 self-certified

HUBS & ACCESSORIES
A - 3/4" Single Entry aluminum
B - 3/4" Single Entry PVC coated Zinc
S - 3/4" Single Entry Stainless Steel
M - M20 single entry*
AA - 3/4" Feed-Thru, Aluminum
PP - 3/4" Feed-Thru, PVC Coated Zinc
SS - 3/4" Feed-Thru, Stainless Steel
MM - M20 Feed-Thru entry*
PI - Photocell 120V**
P2 - Photocell 208-277V**

NOTES:
* Certification pending.
** Photocells for FN Models only - Class I, Div. 2 NEMA 4X only.

NWP Wallpack 13-26W Fluorescent w/one 3/4" Aluminum Hub				
Lamp	**Voltage**	**Description**	**Cat. Number①**	**Max. Ambient Suitability③**
Normal Power Models - Ambient Suitability 40°C Max.				
1-13W	120-277V 50/60Hz	13W Wall or Ceiling	NWPFN1330A	40°C
1-18W	120-277V 50/60Hz	18W Wall or Ceiling	NWPFN1830A	40°C
1-26W	120-277V 50/60Hz	26W Wall or Ceiling	NWPFN2630A	40°C
1-26W	120V DC	26W Wall or Ceiling	NWPFN26DC120A	40°C
Normal and EMERGENCY Models				
1-13W	120-277V 50/60Hz	13W Wall or Ceiling	NWPFE131330A	35°C
1-18W	120-277V 50/60Hz	18W Wall or Ceiling	NWPFE181830A	35°C
EMERGENCY ONLY Models - Ambient Suitability 40°C Max.				
1-13W	120-277V 50/60Hz	13W Wall or Ceiling	NWPFE001330A	40°C
1-18W	120-277V 50/60Hz	18W Wall or Ceiling	NWPFE001830A	40°C
1-26W	120-277V 50/60Hz	26W Wall or Ceiling	NWPFE002630A	40°C
1-26W	120V DC②	26W Wall or Ceiling	NWPFE0026DC120A	40°C

①Provided with one 3/4" aluminum hub as standard.
②NWPFN 120V DC model is c SP us; NWPFE 120V DC emergency-only model is Killark self-certified.
③T-code ,measurements taken in 40°C ambient; operating ambient reduced for normal and emergency models to maintain battery performance.

WALL MOUNTED

CEILING MOUNTED

EXIT SIGN
NWP-DECAL08

Dimensional Information on back panel

Safe T Net 100
Operator's Manual

Proprietary Statement

Thermo GasTech owns proprietary rights in the information disclosed within. By receiving this document, the recipient agrees that neither this document nor the information disclosed within nor any part shall be reproduced or transferred to other documents or used or disclosed to others for manufacturing or for any other purpose except as specifically authorized in writing by **Thermo** GasTech.

Copyright Statement

Information contained in this document is protected by copyright. No part of this document may be photocopied, reproduced, or translated to another program or system without prior written authorization from **Thermo** GasTech., © 2001, **Thermo** GasTech.

Trademark Statement

Protected through use and/or registration in the United States and many foreign countries are the trademarks and service marks of **Thermo** GasTech. The use of the ® symbol indicates registration in the United States only; registrations may not have been issued at present in other countries. All other product names and logos are trademarks of their respective owners.

GASTECH® is a trademark of **Thermo** GasTech and is registered with the U.S. Patent and Trademark Office.

Disclaimer

Under no circumstances will **Thermo** GasTech be liable for any claims, losses, or damages resulting from or arising out of the repair or modification of the equipment by a party other than **Thermo** GasTech or its authorized service representatives, or by operation or use of the equipment other than in accordance with the printed instructions provided by **Thermo** GasTech or if the equipment has been improperly maintained or subject to neglect or accident. Any of the foregoing will void the warranty.

Export Statement

Export of the information and products in this manual from the U.S.A., or re-export from another country, may require written authorization from the U.S. Department of Commerce. Printed in the U.S.A.

Revisions to Manual

All information contained in this manual is believed to be true and correct at the time of printing. However, as part of its continuing efforts to improve its products and their documentation, **Thermo** GasTech reserves the right to make changes at any time without notice. Any revised copies of this manual can be obtained by writing **Thermo** GasTech.

WARNING

THIS INSTRUMENT IS DESIGNED TO DETECT ONE OR MORE OF THE FOLLOWING:

FLAMMABLE VAPORS, OXYGEN CONTENT, AND/OR TOXIC GAS AND TO GIVE WARNING BEFORE THEY REACH HARMFUL CONDITIONS. IN ORDER TO ENSURE THAT IT WILL WARN OF DANGEROUS CONCENTRATIONS, IT IS ESSENTIAL THAT THE INSTRUCTIONS IN THIS MANUAL, PARTICULARLY THOSE CONCERNING START UP, OPERATION, CALIBRATION, AND MAINTENANCE, BE READ, UNDERSTOOD, AND FOLLOWED.

NOTATION CONVENTIONS

Notices are used in this operator's manual to alert you to hazardous conditions to person or instrument and to notify you of additional information. This operator's manual uses the following notices.

WARNING

Notifies you of potential danger that can result in personal injury or death.

CAUTION

Notifies you of potential damage to equipment.

NOTE

Notifies you of additional or critical information.

SERVICE POLICY

Thermo GasTech maintains an instrument service facility at the factory as well as authorized service facilities around the world. Should your instrument require service, you may contact us toll free at **1-877-GASTECH (427-8324) for US only or 1-510-745-8700**, or visit our website www.thermogastech.com for authorized service locations.

For warranty or non-warranty repairs, call us to complete a Return Material Authorization (RMA) form, obtain billing and shipping information and tell us the nature of the problem. For non-warranty repairs, you will need to provide a purchase order number. If you need to set a limit to the repairs costs, state a “Not to Exceed” figure. If you need a quotation before you can authorized the repair costs, so state, but understand this will incur additional costs and may delay processing of the repair.

You may send the unit, prepaid, to: **Thermo** GasTech**, 8407 Central Ave., Newark, CA 94560-3431, Attn.: Service Department**. Enclose the copy of the RMA (Return Material Authorization) that was previously faxed to you. Pack the instrument and all its accessories (preferably in its original packing) and any special instructions.

Repairs are warranted for 90 days from the date of shipment. Sensors have individual warranties.

NOTE

Thermo GasTech assumes no liability for work performed by unauthorized service facilities.

WARRANTY STATEMENT

Thermo GasTech (the “Company”) warrants that the Products will operate substantially in conformance with the Company’s published specifications, when subjected to normal, proper, and intended usage by properly trained personnel, for a period of one (1) year after shipment to Customer (the “Warranty Period”). The Company agrees during the Warranty Period, provided it is promptly notified in writing upon the discovery of any defect and further provided that all costs of returning the defective Products to the Company are prepaid by Customer, to repair or replace, at the Company’s option, defective products so as to cause the same to operate in substantial conformance with said specifications. Replacement parts may be new or refurbished, at the election of the Company. All replaced parts shall become the property of the Company.

Lamps, pump diaphragms/valves, batteries, fuses, bulbs, and other expendable items are expressly excluded from the warranty.

The Company’s sole liability with respect to equipment, materials, parts, or software furnished to the Company by third party suppliers shall be limited to the assignment by the Company to Customer of any such third-party supplier’s warranty, to the extent the same is assignable. In no event shall the Company have any obligation to make repairs, replacements, or corrections required, in whole or in part, as the result of (i) normal wear and tear, (ii) accident, disaster, or event of force majeure, (iii) misuse, fault, or negligence of or by Customer, (iv) use of the Products in a manner for which they were not designed, (v) causes external to the Products such as, but not limited to, power failure or electrical power surges, or (vi) use of the Products in combination with equipment or software not supplied by the Company.

ANY INSTALLATION, MAINTENANCE, REPAIR, SERVICE, RELOCATION, OR ALTERATION TO OR OF, OR OTHER TAMPERING WITH, THE PRODUCTS PERFORMED BY ANY PERSON OR ENTITY OTHER THAN THE COMPANY WITHOUT THE COMPANY’S PRIOR WRITTEN APPROVAL, OR ANY USE OF REPLACEMENT PARTS NOT SUPPLIED BY THE COMPANY, SHALL IMMEDIATELY VOID AND CANCEL ALL WARRANTIES WITH RESPECT TO THE AFFECTED PRODUCTS.

THE OBLIGATION TO REPAIR OR REPLACE A DEFECTIVE PRODUCT SHALL BE THE SOLE REMEDY OF CUSTOMER IN THE EVENT OF A DEFECTIVE PRODUCT. EXCEPT AS EXPRESSLY PROVIDED IN THIS SECTION, THE COMPANY DISCLAIMS ALL WARRANTIES, WHETHER EXPRESS OR IMPLIED, ORAL OR WRITTEN, WITH RESPECT TO THE PRODUCTS, INCLUDING WITHOUT LIMITATION ALL IMPLIED WARRANTIES OF MERCHANTABILITY OR FITNESS FOR ANY PARTICULAR PURPOSE. THE COMPANY DOES NOT WARRANT THAT THE PRODUCTS ARE ERROR-FREE OR WILL ACCOMPLISH ANY PARTICULAR RESULT.

TABLE OF CONTENTS

Chapter 1

Introduction

Overview 1
Description 1
Application 2
Accessories 3
Specifications 4

Chapter 2

Funtional Description

Overview 5
Internal Descriptiion 6

Chapter 3

Installation

Mounting 15
Wiring 16
Start Up 22
Removal 23

Chapter 4

Maintenance

Overview 25
Troubleshooting 26

Chapter 5

Accessories

Overview 31
DC Power Supply with backup battery 31
Alarm Horn 41
AC Line Cord 41

Chapter 6

Gas Detection

Overview 43

Appendix A

Parts List 47

Chapter 1

INTRODUCTION

Overview

This chapter briefly describes the Safe T Net 100 and its applications. It also describes the Safe T Net 100's accessories and features. Expanded descriptions appear in later chapters.

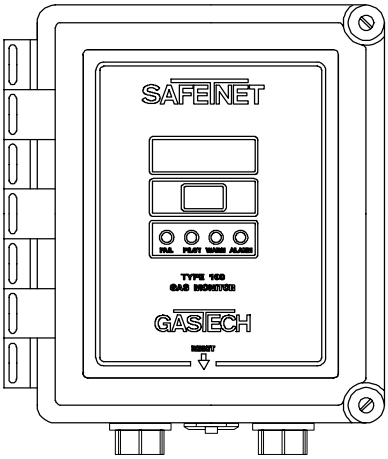

Figure 1-1 Safe T Net 100 Gas Monitor

Description

Safe T Net is a family of fixed-instrument, continuous-monitoring systems. The Safe T Net 100 is a single-point system. It detects combustible gas, toxic gas, or oxygen content at one location. The Safe T Net 100 displays the current gas reading and warns you of hazardous gas concentration conditions with audible and visual alarms at two preset alarm levels.

Application

The Safe T Net 100 is capable of detecting many gases. Tables 6-1 and 6-2 list the gas detection options offered for the Safe T Net 100. These options have many applications. Among the applications are the following:

- Hospitals
- Public utilities
- Landfills
- Petrochemical plants
- Semiconductor manufacturing
- Wastewater treatment
- Oil fields and refineries
- Paper mills
- Leather tanneries
- Mining and metals industry
- Parking garages
- Grain storage silos
- Gasoline generators and engines
- Furnaces
- Lumber drying kilns

Accessories

Table 1-1 provides a brief description of the Safe T Net 100's standard and optional accessories. See Chapter 5, Accessories, for more detailed descriptions.

Table 1-1 Standard and Optional Accessories

Accessory	Description
Safe T Net 100 Operator's Manual*	Includes detailed installation, operation, maintenance, and calibration procedures for the Safe T Net 100.
Safe T Net 100 Quick Reference Card*	A brief description of procedures you commonly perform at the monitoring area.
DC Power Supply with Backup Battery	Provides the Safe T Net 100 with a primary DC power source, and backup power if the primary power source fails.
Alarm Horn	Repeats Safe T Net 100's audible alarms to a remote area.
AC Line Cord	3-conductor wire for AC power connection.

* Supplied as a standard accessory for the Safe T Net 100.

Specifications

Table 1-2 Specifications

Housing	Fiberglass with polycarbonate window (rated NEMA 4X)
Dimensions	10.94 in. H x 8.5 in. W x 6.25 in. D (278 mm x 216 mm x 158 mm)
Weight	8 lbs. (approximate) 3.6 kg (approximate)
Power source	100 to 130 VAC; 200 to 260 VAC; or 12 to 16 VDC[1]
Temperature range	-4°F (-20°C) to 113°F (45°C)
Humidity range	0 to 95% RH (non-condensing)
Controls	RESET, ADJ, and CAL buttons; range selector and alarm logic switches; WARN, ALARM, and DLY adjust potentiometers
Alarm delay setting	1 seconds[2]
Fail delay setting	2 seconds[2]
Relays	3 amps @ 240 VAC (resistive) 5 amps @ 120 VAC (resistive) 5 amps @ 24 VDC (resistive)
Standard accessories	Operator's manual, quick reference card
Optional accessories	Test kit, AC line cord; alarm horn; DC Power Supply with Backup Battery

[1] Unit must be ordered for nominal 100 to 130 VAC or 200 to 260 VAC. Either version can also be operated from 12-16 VDC

[2] User-adjustable

Chapter 2

FUNCTIONAL DESCRIPTION

Overview

This chapter describes the internal components of the Safe T Net 100. All internal components are attached or connected to the main circuit board. A screw in each corner of the main circuit board secures the board to the housing. Each component is identified on the circuit board by a printed designation. The designations are noted in this chapter in parenthesis (XX#) next to the component heading.

To gain access to the interior of the Safe T Net 100:

1. Pull the bottom of both security latches forward (toward the housing door).
2. Push the housing door back, and release the top of both latches from the catches on the housing door.
3. Open the housing door.

Internal Description

This section describes the internal components of the Safe T Net 100.

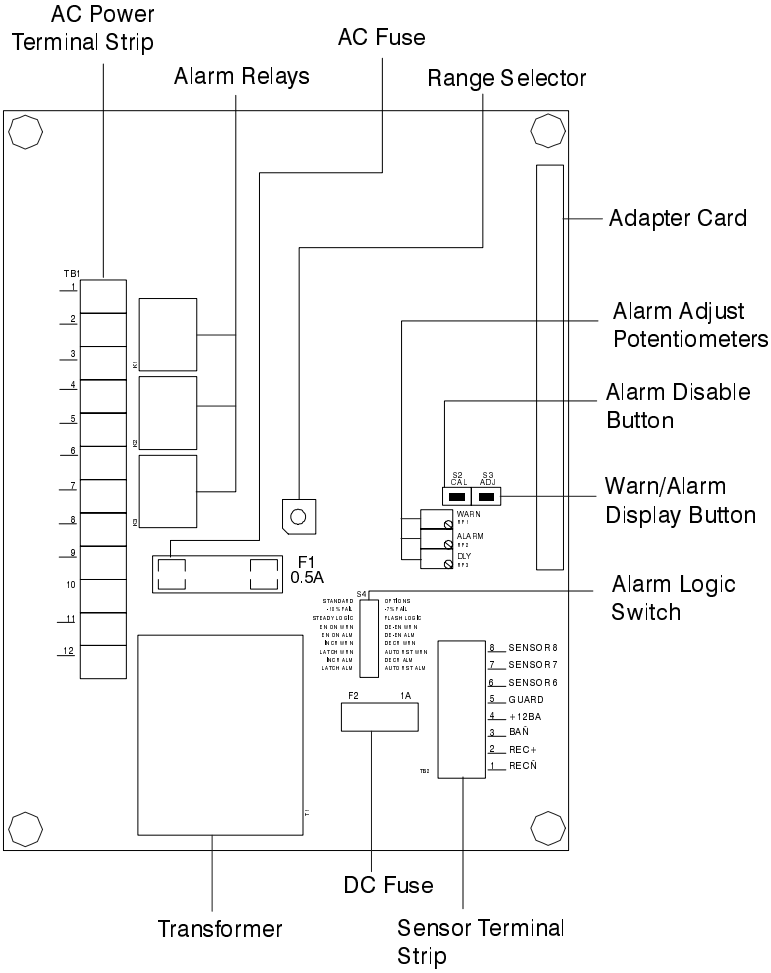

Figure 2-1 Internal Component Location

AC Power Terminal Strip (TB1)

NOTE

See Chapter 3, Installation, for complete wiring procedures.

This 12-point terminal strip is on the left side of the main circuit board (see Figure 2-1). Each terminal is labeled and numbered. The labels are printed on the circuit board directly to the left of the terminal strip. They describe each terminal's function. The numbers are on the left side of the terminal strip, and are numbered 1 through 12.

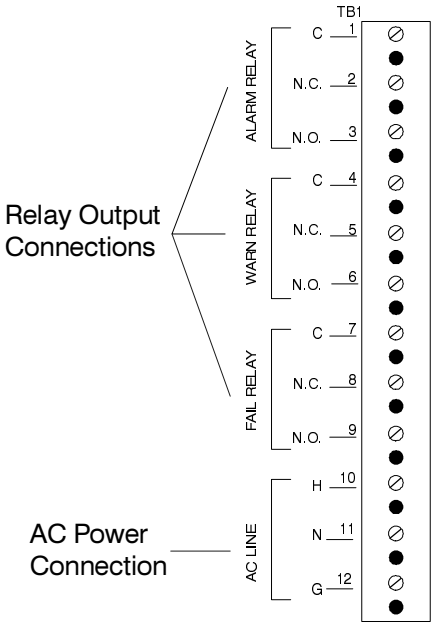

Figure 2-2 AC Power Strip

TERMINALS 10 THROUGH 12

The bottom three (10, 11, and 12) terminals (**AC LINE**) are for AC power connection (see Figure 2-2). They are labeled **H** (hot), **N** (neutral), and **G** (ground).

TERMINALS 1 THROUGH 9

The top nine (1 through 9) terminals are for relay output connections (see Figure 2-2). The **ALARM**, **WARN**, and **FAIL** relay outputs each have the following terminals: **C** (common), **N.C.** (normally closed), and **N.O.** (normally open). You may use the relay output terminals to connect external alarms or alarm responses. The relay contacts are isolated single-pole, double-throw (SPDT) contacts and are not fused.

Sensor Terminal Strip (TB2)

This 8-point terminal strip is on the lower right side of the main circuit board (see Figure 2-1). Each terminal is labeled and numbered. The labels are printed on the circuit board directly to the right of the terminal strip. They describe each terminal's function. The numbers are on the right side of the terminal strip, and are numbered 8 through 1 from top to bottom.

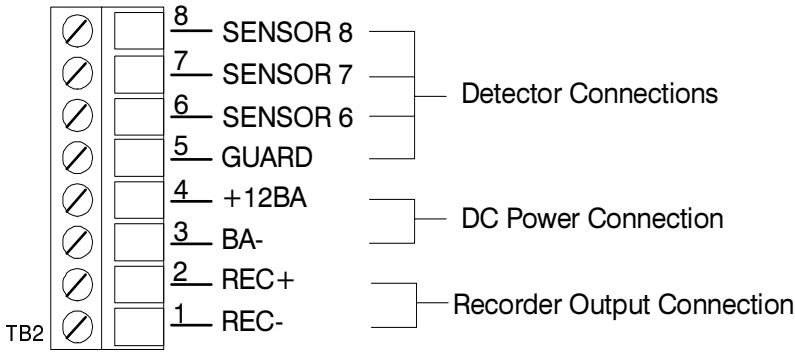

Figure 2-3 Sensor Terminal Strip

TERMINALS 6 THROUGH 8

The top three terminals (6, 7, and 8) are for wiring connections from the detector (see Figure 2-3). They are labeled **SENSOR 6**, **SENSOR 7**, and **SENSOR 8**.

TERMINAL 5

Terminal 5 is an additional wiring connection if you install the detector at a remote location (see Figure 2-3). It is labeled **GUARD.**

TERMINALS 3 AND 4

Terminals 3 and 4 are for DC power connections (see Figure 2-3). They are labeled **+12BA** (terminal 4) and **BA-** (terminal 3).

TERMINALS 1 AND 2

Terminals 1 and 2 are for recorder output connections (see Figure 2-3). They are labeled **REC+** (terminal 2) and **REC-** (terminal 1). The output at these connections is 4 to 20 mA. You can connect a recording or logging device to terminals 1 and 2 to record the Safe T Net 100's readings.

Alarm Relays (K1, K2, K3)

The alarm relays are to the right of the AC power terminal strip (see Figure 2-1). The relays are from top to bottom alarm (K1), warn, (K2), and fail (K3). The applicable relay activates when the Safe T Net 100 is in a warn, alarm, or fail condition. When the relay activates, it is either energized or de-energized. Switches 3 and 4 of the alarm logic switch select normally energized or normally de-energized relay operation.

The relay contacts are isolated, and are rated for 3 amps at 240 VAC and 5 amps at 24 VDC and 115 VAC (resistive.)

Transformer (T1)

The transformer is near the lower left side of the main circuit board (see Figure 2-1). It converts the incoming AC power to nominal 12 VAC. The lower AC voltage is then converted to DC power for operation of the circuits.

Range Selector (S1)

The range selector is a 10-position rotary switch near the center of the main circuit board (see Figure 2-1). It selects the detection range of the Safe T Net 100. An arrow in the center of the switch indicates the current position of the Range Selector.

CAUTION

Do not adjust the range selector. It is factory-set to match the sensor/transmitter supplied with the Safe T Net 100.

Alarm Logic Switch (S4)

The alarm logic switch is below and to the right of the range selector (see Figure 2-1). It has eight, 2-position switches. The alarm logic switch controls various functions of the Safe T Net 100's visual and audible alarms and relay outputs. Each of the eight switches is labeled on the main circuit board and numbered on the switch. Each switch and its function is described below from top to bottom.

NOTE

The Safe T Net 100 "reads" the alarm logic switch when it initially receives incoming power. To adjust any of the functions described below, disconnect the incoming power source, adjust the alarm logic switch, then re-connect the incoming power source.

SWITCH #1

Switch #1 controls the fail circuit. It is factory-set, and should not be user-adjusted.

SWITCH #2

Switch #2 controls the alarm logic of the Safe T Net 100. The left position is labeled **STEADY LOGIC**. In this position, the status indicator lights are steady during a warn or alarm condition, and the WARN light flashes, the warn relay de-energizes, and the buzzer silences (in warn condition only) if you press the RESET button.

The right position is labeled **FLASH LOGIC**. In this position, the status indicator lights flash during a warn or alarm condition, and are steady if you press the RESET button. You cannot silence the buzzer or de-energize the relays until the display reading indicates a normal condition and you press the RESET button.

Standard factory setting is to the left (**STEADY LOGIC**).

SWITCH #3

Switch #3 controls the warn relay. The left position is labeled **EN ON WRN**. In this position, the warn relay is de-energized in normal condition, and energizes when the Safe T Net 100 is in warn condition. The right position is labeled **DE-EN WRN**. In this position, the warn relay is energized in normal condition, and de-energizes when the Safe T Net 100 is in warn condition.

Standard factory setting is to the left (**EN ON WRN**).

SWITCH #4

Switch #4 controls the alarm relay. The left position is labeled **EN ON ALM**. In this position, the alarm relay is normally de-energized, and energizes when the Safe T Net 100 is in alarm condition. The right position is labeled **DE-EN ALM**. In this position, the alarm relay is normally energized, and de-energizes when the Safe T Net 100 is in alarm condition.

Standard factory setting is to the left (**EN ON ALM**).

SWITCH #5

Switch #5 defines a warn condition. The left position is labeled **INCR WRN**. In this position, the Safe T Net 100 defines a warn condition as an increasing reading that reaches the preset warn level. The right position is labeled **DECR WRN**. In this position, the Safe T Net 100 defines a warn condition as a decreasing reading that falls to the preset warn level.

Standard factory setting is to the left (**INCR WRN**).

SWITCH #6

Switch #6 controls the resetting of the warn circuit when a warn condition clears. The circuit operates according to the logic selected by Switch #2.

The left position is labeled **LATCH WRN**. In this position, you must manually reset the warn circuit by pressing the RESET button if the Safe T Net 100 is or was in a warn condition.

The right position is labeled **AUTO RST WRN**. In this position, the warn circuit automatically resets when the display reading falls below the preset warn level.

Standard factory setting is to the left (**LATCH WRN**) for all versions except oxygen. Standard factory setting is to the right (**AUTO RST WRN**) for the oxygen version.

SWITCH #7

Switch #7 defines an alarm condition. The left position is labeled **INCR ALM**. In this position, the Safe T Net 100 defines an alarm condition as an increasing reading that reaches the preset alarm level. The right position is labeled **DECR ALM**. In this position, the Safe T Net 100 defines an alarm condition as a decreasing reading that falls to the preset alarm level.

Standard factory setting is to the left (**INCR ALM**) for all versions except oxygen. Standard factory setting is to the right (**DECR ALM**) for the oxygen version.

SWITCH #8

Switch #8 controls the de-activation of the alarm circuit when an alarm condition clears. The left position is labeled **LATCH ALM**. In this position, you must manually reset the alarm circuit after the display reading falls below the preset alarm level.

The right position is labeled **AUTO RST ALM**. In this position, the alarm circuit automatically resets itself when the display reading falls below the preset alarm level.

Standard factory setting is to the left (**LATCH ALM**) for all versions except oxygen. Standard factory setting is to the right (**AUTO RST ALM**) for the oxygen version.

Alarm Adjust Potentiometers

Three adjustment potentiometers are on the right side of the main circuit board. They are above and to the right of the alarm logic switch (see Figure 2-1). The alarm delay is factory-set as shown in Table 1-2, Specifications. The warn and alarm level are factory-set as shown in the transmitter Operator's Manual. You can adjust the potentiometers with a small, flat-blade screwdriver. The potentiometers are marked **WARN**, **ALRM**, and **DLY**.

WARN (RP1)

The WARN potentiometer controls the reading at which the warn circuit activates. A screw on the potentiometer allows you to adjust the warn setting.

ALRM (RP2)

The ALRM potentiometer controls the reading at which the alarm circuit activates. A screw on the potentiometer allows you to adjust the alarm setting.

DLY (RP3)

The DLY potentiometer controls the delay setting. You can adjust this potentiometer to delay the activation of the indicator lights, buzzer, and relays from 0 to 16 seconds after a warn, alarm, or fail condition exists. A screw on the potentiometer allows you to adjust the delay setting.

The alarm delay reduces false alarms due to electrical noise and radio frequency interference (RFI).

Alarm Disable Button (S2)

The alarm disable button is a push-button switch directly above and to the right of the alarm adjust potentiometers (see Figure 2-1). It is marked **CAL**. When you push it, this button disables the warn and alarm circuits for 5 minutes while you perform calibration or other maintenance procedures.

NOTE

The WARN and ALARM indicator lights are still active and the reading on the display screen flashes after you disable the warn and alarm circuits.

NOTE

The alarm disable button disables the warn and alarm circuits 5 minutes from the time you push it. Pushing the button several times does not accumulate the time that the circuits are disabled.

The alarm disable button also displays the current alarm delay setting after you press the warn/alarm display button twice. See Chapter 4, Maintenance, for a description of this procedure.

Warn/Alarm Display Button (S3)

The warn/alarm display button is directly to the right of the alarm disable button (see Figure 2-1). It is marked **ADJ**. When you push it, the current warn and alarm settings are shown on the display screen. See Chapter 4, Maintenance, for a description of this procedure.

Fuses

Two fuses protect the power circuitry from internal failure of the Safe T Net 100.

AC Fuse (F1)

The AC fuse is above the transformer (see Figure 2-1). It protects the AC line circuitry, and it is rated at 0.5 amp. A cover on the AC fuse protects you from accidental shock.

DC Fuse (F2)

The DC fuse is below the alarm logic switch (see Figure 2-1). It protects the DC line circuitry, and it is rated at 1.0 amp.

Adapter Card

The adapter card plugs into the top right corner of the main circuit board (see Figure 2-1). A guide secures the adapter card to the circuit board. An edge connector allows electrical connection to the main circuit board.

A 0.5 amp fuse is mounted near the front of the card, and protects the internal power supply from short circuit conditions that might occur at the remote transmitter or in the external wiring. Test points and potentiometers are for factory set-up.

CAUTION

Do not adjust the potentiometers adjustment may disturb factory settings.

Chapter 3

INSTALLATION

Mounting

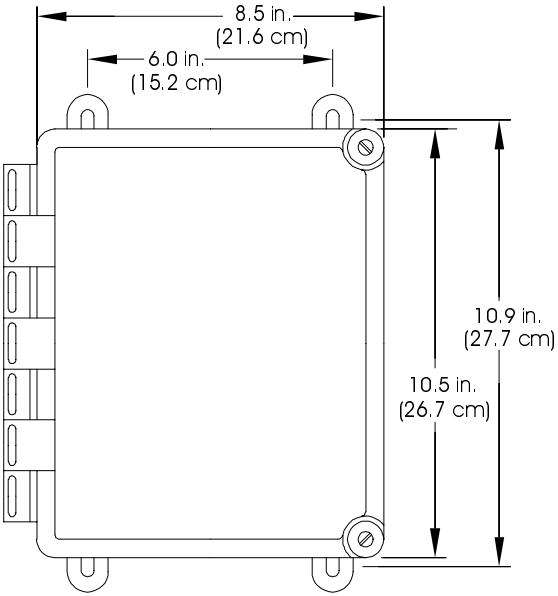

Figure 3-1 Outline and Mounting Dimensions, Safe T Net 100

CAUTION

The Safe T Net 100 is suitable for installation only in a non-hazardous environment (where general purpose equipment is used). The Safe T Net 100 is not suitable for installation in Class I, Division 1 or Division 2 areas.

1. Select a convenient mounting area.

   When you select the mounting area, consider the following (see Figure 3-1):

   - Is a local power source available?
   - Is there enough room to open the housing door?
   - Is there enough room to make wiring connections through the conduit hubs?
   - Is there enough room to attach the test cup to the detector (if it is mounted directly to the Safe T Net 100) during the calibration procedure.
2. If the housing door is unlatched, close the housing door, place the top of each latch on its catch on the housing door, and push the bottom of each latch toward the back of the housing until the latch locks.
3. Position the Safe T Net 100 on a vertical surface at approximately eye level (4 1/2 to 5 feet from the floor).
4. Four mounting feet are attached to the back of the housing at each corner. Secure the housing to the vertical surface with 1/4 in. screws through each mounting foot.

Wiring

This section describes detector, external alarm, recorder output, AC power, and DC power wiring procedures.

CAUTION

Make all wiring connections in conduit through the hubs on the bottom of the housing. Do not wire power and detector wiring in the same conduit.

Detector Wiring

Internal Amplifier versions

The internal amplifier versions of the Safe T NET 100 are furnished with the detector wiring already installed. Refer to the appropriate manual insert for information on wiring the internal amplifier versions.

Remote Amplifier versions

WARNING

Make sure all power to the Safe T Net 100 is disconnected or turned off during all wiring procedures.

1. Use a 2- or 3-conductor shielded cable, or run the wiring in metal conduit to reduce the possibility of RFI (Radio Frequency Interference) or EMI (Electromagnetic Interference).
2. Run the wires or cable through the conduit hub to the right of the buzzer on the Safe T Net 100 housing. Locate the sensor terminal strip at the bottom right of the Safe T Net 100 main printed circuit board.
3. If you are using shielded cable, connect the shield wire to the screw on the top of the conduit hub.
4. Connect the wires to the sensor terminal strip as shown in the table below.

Table 3-1 STN 100 Sensor terminal strip

Detector/Transmitter Type	Terminal 6 (-)	Terminal 7 (FB)	Terminal 8 (+)
FX-SMT (LEL)	TB1-3 (-)	TB1-2 (FB)	TB1-1 (+)
FX-SMT/SMTn (Toxic/O2)	No connection	TB1-2 (FB)	TB1-1 (+)
FX-IR	TB3-3 (-)	TB3-2 (FB)	TB3-1 (+)
Standard (LEL)	-	FB	+
Standard (Toxic/O2)	No connection	FB	+
Standard (sample-draw, all gases)	-12/24V	OUT FB	+12/24V

External Alarm Wiring

If you plan to use external alarms (horn, strobe, process control, etc.), connect them at this time.

CAUTION

External alarms are controlled by the Safe T Net 100's relays. The relays are rated for 5 amps maximum. Do not connect any device with a current load that exceeds the limits of the relay.

1. Open the housing door, and locate the AC power terminal strip. It is on the left side of the main circuit board.
2. Run the wiring of the external alarm through the conduit hub to the left of the buzzer.

3. Connect the wiring (see Figure 3-2) to the appropriate relay connection (**ALARM**, **WARN**, or **FAIL**). Connect the positive or hot lead of the external alarm device to **C** (common). Connect the positive or hot lead of the external alarm's power source to **N.C.** (normally closed) or **N.O.** (normally open). Connect the negative or neutral lead of the external alarm's power source to the negative or neutral lead of the alarm device.

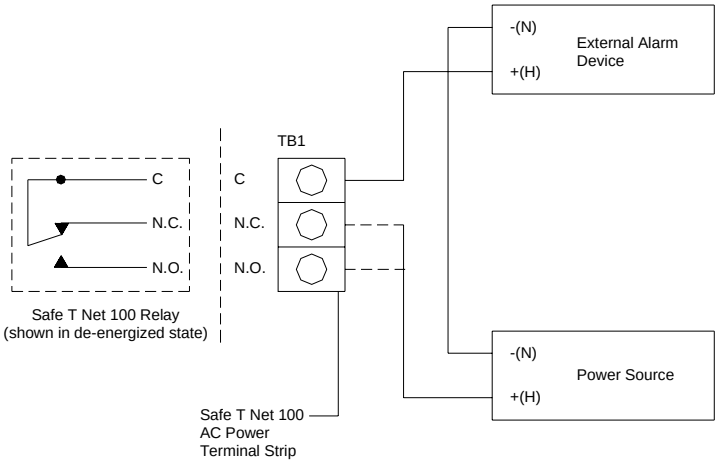

Figure 3-2 External Alarm Wiring

4. Test the connection by gently pulling the leads from the terminal connections.

NOTE

The alarm and warn relays are de-energized in normal operation, and energize when the Safe T Net 100 is in alarm or warn condition. To energize the relays in normal condition, and de-energize them in alarm or warn conditions, place switches 3 and 4 of the alarm logic switch to the right before you plug in or turn on the incoming power. N.O. (normally open) and N.C. (normally closed) describe the condition of the relay when it is de-energized. If the relay is energized in normal operation, N.C. is open and N.O. is closed.

Recorder Output Wiring

1. Open the housing door, and locate the sensor terminal strip. It is on the lower right corner of the main circuit board.
2. Run the leads from the recording device through the hub to the left of the buzzer.

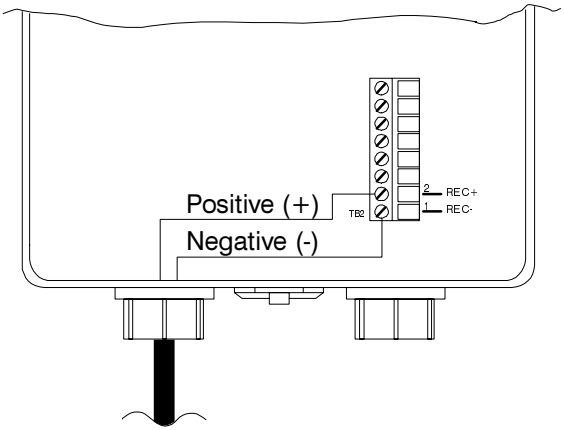

Figure 3-3 Recorder Output Wiring

3. Connect the leads to terminals 1 and 2 of the sensor terminal strip (see Figure 3-3). Connect the positive (+) lead to **REC +** (terminal 2) and the negative (–) lead to **REC-** (terminal 1).

CAUTION

The maximum input impedance of the recording device may not exceed 400 ohms.

4. Test the connection by gently pulling the leads from the terminal connections.

AC Power Wiring

WARNING

Make connections at the Safe T Net 100 terminal strip before you plug in or turn on the AC power. Before making any wiring adjustments, always verify that the AC power source is not live.

1. Open the housing door, and locate the AC power terminal strip. It is on the left side of the main circuit board.

2. Run an AC power line through the conduit hub to the left of the buzzer.

   If you use the optional AC line cord, screw a cable bushing into the conduit hub to the left of the buzzer.The bushing is supplied as part of the AC line cord accessory.

3. Connect the AC line to terminals 10, 11, and 12 of the AC power terminal strip (see Figure 3-4). Connect the hot (black) lead to **H** (terminal 10), the neutral (white) lead to **N** (terminal 11), and the ground (green) lead to **G** (terminal 12).

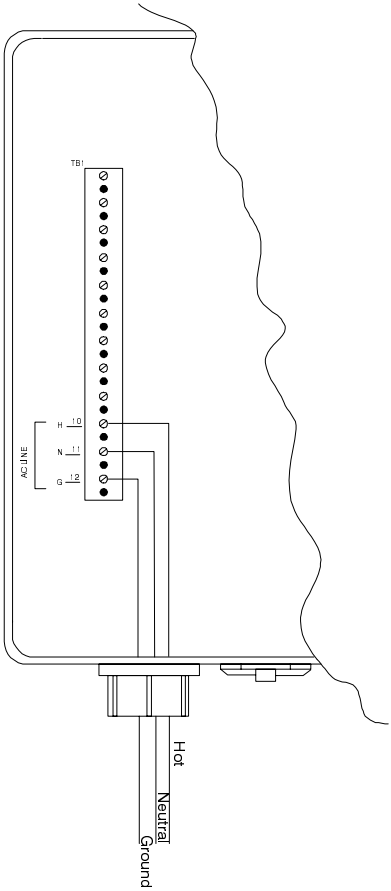

Figure 3-4 AC Power Wiring

4. Test the connection by gently pulling the leads from the terminal connections.

CAUTION

Make sure the operating voltage (115 or 220) of the Safe T Net 100 matches the voltage of the AC power source. The operating voltage of the Safe T Net 100 is shown on a label attached to the inside of the housing door.

DC Power Wiring

CAUTION

DC power connections are provided as a backup to the primary AC power source for the Safe T Net 100. If AC power is unavailable, use 12 to 18 VDC power as a primary power source to operate the Safe T Net 100 continuously.

1. Open the housing door, and locate the sensor terminal strip. It is on the lower right corner of the main circuit board.
2. Run a DC power cord through the conduit hub to the left of the buzzer.
3. Connect the power cord to terminals 3 and 4 of the sensor terminal strip (see Figure 3-5). Connect the positive (+) lead to **+12BA** (terminal 4) and the negative (-) lead to **BA-** (terminal 3).

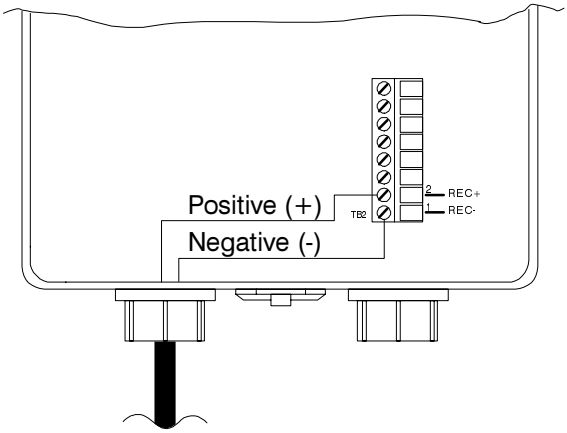

Figure 3-5 DC Power Wiring

4. Test the connection by gently pulling the leads from the terminal connections.

Start Up

Complete the following procedure to place the Safe T Net 100 in normal operation.

Preparing for Start Up

1. Complete the mounting and wiring procedures described earlier in this chapter.
2. Complete installation procedures as described in the transmitter Operator's manual.
3. Check to make sure that all wiring connections are secure and correct.

Introducing Incoming Power

1. Plug in or turn on the incoming power (AC and/or DC) at the power source end.

WARNING

The warn and alarm circuits are not active for 45 seconds after the Safe T Net 100 initially receives the incoming power. This time delay prevents false alarms during detector warm-up.

Verifying Indicator Lights

1. After you connect or turn on the incoming power source, check the status indicator lights on the housing door.
2. Verify the PILOT light is on. If the PILOT light is off, the Safe T Net 100 is not receiving the incoming power.

WARNING

Unplug or turn off the incoming power at the power source before you make wiring adjustments or remove the fuse.

3. Check the AC or DC power connections in the Safe T Net 100 and at the power source if the PILOT light is off. Also check the AC and DC fuses.
4. The indicator lights on the housing door show the current status of the Safe T Net 100 during the start-up procedure. Table 3-2, Start-up Indications, shows the status indicated by each light and the suggested response.

Table 3-2 Start-up Indications

Indicator Light	Probable Status	Recommended Response
PILOT	Receiving power.	None
FAIL	Detector or circuitry is broken, incomplete, or incorrect.	1. Verify detector wiring is correct and secure. 2. See the “Troubleshooting” section in the transmitter Operator’s manual.
	Adapter card is not connected or is connected incorrectly.	1. Make sure adapter card is connected. 2. Make sure potentiometers on adapter card face toward the circuit board (away from the side of housing). 3. Contact **Thermo** GasTech for further instruction.

Removal

1. Disconnect or turn off the incoming power at the power source end.
2. Disconnect the power wiring from the AC power terminal strip, and pull the wires out of the housing through the conduit hub. If the optional AC line cord is used, leave it connected to the terminal strip.

WARNING

Make sure power to the relay circuits is turned off before you perform Step 3.

3. Disconnect and remove any other connections made to the AC power terminal strip.
4. Disconnect and remove all connections made to the sensor terminal strip other than the detector connections.
5. Remove the mounting screws from the mounting feet or interior mounting slots at each corner of the Safe T Net 100 housing.
6. Protect the Safe T Net 100 or any components of the Safe T Net 100 if you return it for repair.

Chapter 4

MAINTENANCE

Overview

This Chapter describes corrective maintenance procedures for the Safe T Net 100. It includes a troubleshooting guide and procedures for adjusting the alarm levels and the alarm delay.

WARNING

Perform maintenance activities in a non-hazardous environment.

Troubleshooting

The following is a troubleshooting guide. It describes the symptoms, probable causes, and recommended actions for problems you may encounter.

Table 4-1 Troubleshooting

Condition	Symptom(s)	Probable Cause(s)	Recommended Action
No Power	• PILOT indicator light off. • No reading on the display screen	• Incorrect or incomplete power circuit.	1. Verify correct connection at the power source. 2. Verify and correct (if necessary) the connections at terminals 10, 11, and 12 of the AC power terminal strip (AC power) or terminals 3 and 4 of the sensor terminal strip (DC power). See Chapter 3, Installation. 3. Check and replace (if necessary) the AC and DC fuses. 4. Check ribbon cable connection to display screen (inside housing door) and top left corner of main circuit board.
Frequent Alarms	• Frequent or false alarms, but no change in zero reading.	• False readings due to Radio Frequency Interference (RFI) and/or electrical noise.	1. Increase the Alarm delay setting. See the "Adjusting the Alarm Delay" section at the end of this chapter.

Table 4-1 Troubleshooting (Continued)

Condition	Symptom(s)	Probable Cause(s)	Recommended Action
Incorrect Alarm Logic	• Audible and visual alarms and alarm relays do not operate as described in Chapter 2, Functional Description.	• Alarm logic switch adjusted while power is on. • Bad circuitry.	1. Adjust the alarm logic switch to your preferred alarm logic. 2. Unplug or turn off the incoming power at the power source. 3. Plug in or turn on the incoming power at the power source. 4. If incorrect operation of the alarms or alarm relays continues, contact **Thermo** GasTech for further instruction.
Accidental Disable	• Display reading is blinking. • Buzzer is silent. • Relays are disabled.	• Alarm disable button (marked CAL) pressed.	1. Press the RESET button to return to normal operation.

Adjusting the Alarm Levels

Standard warn and alarm levels are shown in Chapter 6, Gas Detection. To adjust the alarm levels:

1. Unlatch and open the housing door. Locate the warn/alarm display button (marked **ADJ**) and the alarm adjust potentiometers (marked **WARN** and **ALRM**).

   The warn/alarm display button is on the right side of the main circuit board, and is to the left of the adapter card. The alarm adjust potentiometers are directly below the warn/alarm display button.

2. Push the warn/alarm display button (**ADJ**) once. The current warn level is displayed on the display screen and the WARN light blinks.

NOTE

The warn and alarm level and alarm delay are shown on the display screen for 30 seconds. The Safe T Net 100 returns to normal operation if you do not continue the procedure in 30 seconds.

3. Adjust the warn level on the display screen to your preferred warn level. Turn the warn adjust potentiometer clockwise to increase the warn level; turn the warn adjust potentiometer counterclockwise to decrease the warn level.

NOTE

To return to normal operation, push the warn/alarm display button twice. To adjust the alarm level, continue with Step 4.

4. Push the warn/alarm display button. The current alarm level is displayed on the display screen and the ALARM light blinks.
5. Adjust the alarm level on the display screen to your preferred alarm level. Turn the alarm adjust potentiometer clockwise to increase the alarm level; turn the alarm adjust potentiometer counterclockwise to decrease the alarm level.
6. Push the warn/alarm display button to return to normal operation.
7. Close and latch the housing door.

Adjusting the Alarm Delay

The alarm delay feature delays the operation of the status indicator lights, buzzer, and relays during warn, alarm, or fail conditions. This delay eliminates false alarms due to power transmissions and electrical noise. The delay can be set from 0.0 to 16.0 seconds. The standard alarm delay and fail delay settings are shown in Table 2-1, Specifications. To adjust the delay settings:

1. Unlatch and open the housing door. Locate the warn/alarm display button (marked **ADJ**), the alarm disable button (marked **CAL**) and the delay adjust potentiometer (marked **DLY**).

   The warn/alarm display and alarm disable buttons are on the right side of the main circuit board, and are to the left of the adapter card. The delay adjust potentiometer is directly below the warn/alarm display and alarm disable buttons.

2. Push the warn/alarm display button (**ADJ**) twice. The current alarm level is displayed on the display screen and the ALARM indicator light blinks.
3. Push the alarm disable button (**CAL**) once. The current alarm delay setting is displayed on the display screen and the WARN and ALARM indicator lights blink.

NOTE

The fail delay setting is twice the setting displayed on the display screen. If the display screen indicates an alarm delay setting of **4.5**, the actual fail delay setting is **9.0**.

4. Adjust the delay setting on the display screen to your preferred setting (0.0 to 16.0 seconds). Turn the delay adjust potentiometer clockwise to increase the setting; turn the delay adjust potentiometer counterclockwise to decrease the setting.
5. Push the warn/alarm display button once to return to normal operation.

NOTE

The Safe T Net 100 automatically returns to normal operation 30 seconds after you push **CAL** if you do not perform Step 5.

6. Close and latch the housing door.

Chapter 5

ACCESSORIES

Overview

This chapter describes the Safe T Net 100's accessories.

DC Power Supply with Backup Battery

The DC power supply with backup battery provides nominal 12 VDC power to operate the Safe T Net 100 as a primary power source. It requires 115 VAC power for operation. In case of AC power failure, it provides a backup power source to the Safe T Net 100 for up to 8 hours. The DC power supply with backup battery is thermal and short circuit protected.

Thermo GasTech offers two versions of this optional accessory. One version is UL listed, and the other version is not listed. Differences between the two versions are described within this section.

Description

This section describes the housing and the internal components of the DC power supply with backup battery. Internal components include the transformer, the circuit board, and the batteries (see Figure 5-1).

HOUSING

The steel housing measures 11.2 in. (28.4 cm) x 15.4 in. (39.1 cm) x 4.3 in. (10.9 cm). Two mounting holes are on the back of the housing near the top, and two mounting holes are on the back of the housing near the bottom. The housing has a total of eight knockouts for external connections. A lock near the top of the housing door secures the housing door and locks it in place during normal operation. A label on the inside of the housing door contains a general installation procedure and wiring diagram.

TRANSFORMER

The transformer is near the upper left corner of the housing. It converts the incoming AC power to DC power for operation of the backup battery and the 12 VDC output.

Two leads (white and black) extend from the left side of the transformer. These leads are for connection to the incoming 115 VAC power source. A grounding lug to the left of the transformer is to connect the ground wire of the AC power wire. Two leads extend from the right side of the transformer. These leads connect to the input terminal strip on the circuit board.

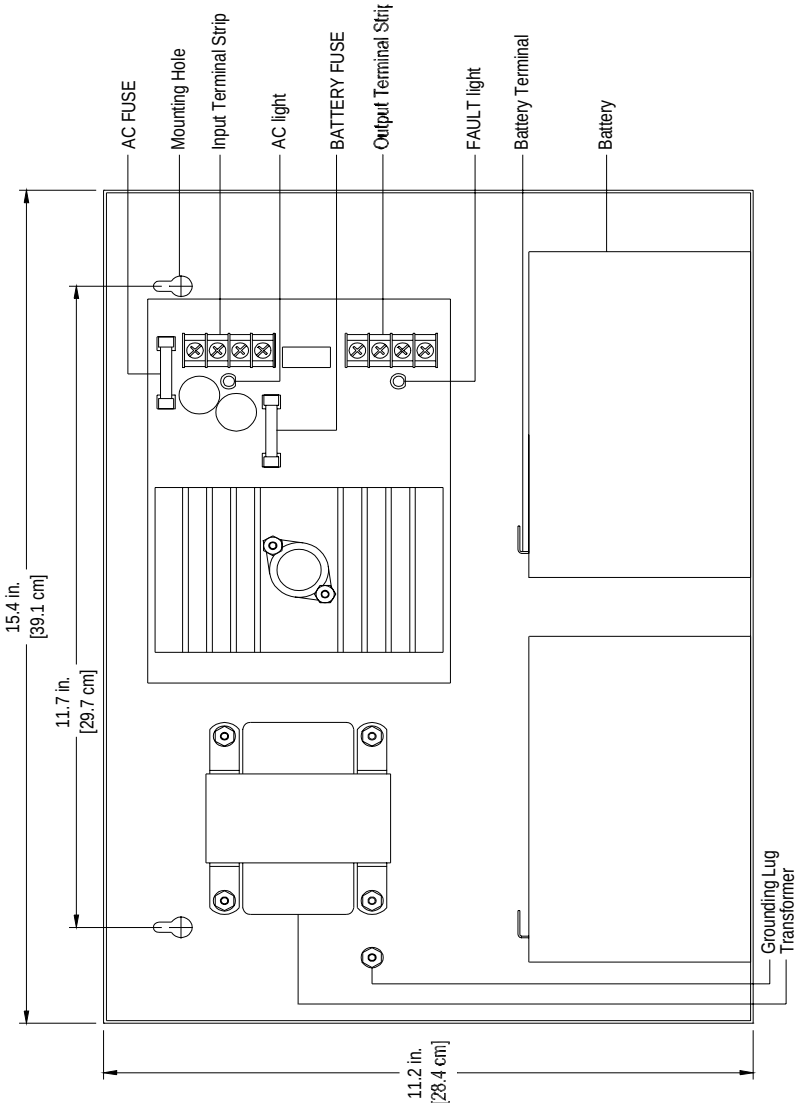

Figure 5-1 DC Power Supply with Backup Battery

Circuit Board

The circuit board is to the right of the transformer. The circuit board contains components that maintain the charge of the batteries. The charging circuit brings low batteries up to full charge, and maintains the batteries at an operating level.

Two four-point terminal strips are on the right side of the circuit board. The upper terminal strip is the input terminal strip. It allows connection to the transformer and one of the batteries. The lower terminal strip is the output terminal strip. It allows connection to the Safe T Net 100 and an optional fault indicator**.** If a fault condition occurs at the DC power supply with backup battery, 12 VDC power is supplied to any indicator wired to the FAULT OUTPUT terminal. **Thermo** GasTech offers a buzzer that operates from 12 VDC for this purpose.

The non-UL version has a dip switch between the two terminal strips. The switch is factory-set and should not be adjusted. The UL version does not have this dip switch.

Two indicator lights on the circuit board indicate the status of the DC power supply with backup battery. The light marked **AC** is to the left of the input terminal strip. When the AC light is on, the DC power supply with backup battery is operating from the AC power source. The light marked **FAULT** is to the left of the output terminal strip. When the FAULT light is on, one or more of the following conditions may exist: low AC power, no AC power, blown AC FUSE, blown BATTERY FUSE, incorrect wiring connections, and low battery. A third light below the BATTERY FUSE does not serve a user function.

Two 10-amp fuses protect the circuitry of the circuit board. The AC FUSE is above the input terminal strip. It protects the circuitry of the AC line. The BATTERY FUSE is to the left of the input terminal strip. It protects the batteries from short circuit conditions.

Batteries

Two sealed, lead-acid batteries are at the bottom of the housing. The batteries are rated 12-volts at 7 ampere-hours (14 ampere-hours total) and are rechargeable. Positive and negative terminals are on the top of the batteries at the left side.

A wiring harness connects the two batteries. The black lead connects the negative terminals, and the red lead connects the positive terminals. The wiring harness is factory-installed to the input terminal strip.

Installation

This section describes the installation procedure for the DC power supply with backup battery.

NOTE

If you use the DC power supply with backup battery accessory, disregard the AC and DC power wiring procedures described in Chapter 3, Installation. All power for the Safe T Net 100 is introduced through this accessory.

MOUNTING

1. Open the housing door, and remove the protective foam inserts.
2. Position the housing on a vertical surface near the Safe T Net 100.
3. A mounting hole is near each corner on the back of the housing. Secure the housing to the vertical surface with screws through each hole. Use screws that are appropriate for the mounting surface.

WIRING

WARNING

Make all other wiring connections before you make connections to the DC power supply with backup battery. Make sure you turn off all AC power before you make the following wiring connections.

1. Run AC power wires through the knockout on the left side or the top of the housing, and connect the AC line to the white and black leads that extend from the left side of the transformer.

   Connect the hot or positive (+) AC lead from the power source to the transformer's black lead; connect the neutral or negative (–) AC lead from the power source to the transformer's white lead.

WARNING

The red (+) and black (-) wires of the battery wiring harness receive power from the batteries, and are active before the incoming power is connected. Do not touch the wires to each other or any other conductor while making wiring connections.

2. Confirm that the leads extending from the right side of the transformer are connected to the terminals marked **LOW VOLTAGE AC CONNECTION** on the input terminal strip. If necessary, connect the leads to the terminals.
3. Plug in or turn on the incoming AC power at the power source end.

4. Connect a multimeter to the terminal marked **DC OUTPUT** on the output terminal strip, and verify a multimeter reading of approximately 13.8 VDC.

   Connect the positive multimeter lead to the terminal marked +; connect the negative multimeter lead to the terminal marked –.

5. Connect a multimeter to the terminal marked **BATTERY CONNECTION** on the input terminal strip, and repeat Step 4.
6. Unplug or turn off the incoming AC power at the power source end.
7. Connect the output terminal strip in the DC power supply with backup battery to the sensor terminal strip in the Safe T Net 100 as shown in Table 5-1.

Table 5-1 Wiring The DC Power Supply with backup Battery to the Safe T Net 100

Output Term. Strip (DC Power Supply)	Sensor Term. Strip (Safe T Net 100)
DC OUTPUT (+)	Terminal 4 (+12BA)
DC OUTPUT (–)	Terminal 3 (BA–)

Run the two wires through the knockout on the right side or the top of the accessory's housing and the left conduit hub on the bottom of the Safe T Net 100.

CAUTION

Make sure the wires from the DC power supply with backup battery are connected to the correct terminals in the Safe T Net 100. An incorrect connection may damage the Safe T Net 100.

8. If you are using a device to indicate a fault condition at the DC power supply with backup battery, connect the device to the terminal marked **FAULT OUTPUT** on the output terminal strip.
9. Connect the positive lead of the indicator to the terminal marked +; connect the negative lead of the indicator to the terminal marked –.
10. Connect the four leads that extend from the battery wiring harness to the terminals on the batteries.

    Connect the two red leads to the positive (+) battery terminals; connect the two black leads to the negative (–) battery terminals.

CAUTION

Make sure the leads from the wiring harness are connected to the correct battery terminals. An incorrect connection will destroy the battery fuse.

11. Plug in or turn on the incoming AC power at the power source end.
12. Make sure the Safe T Net 100 is operating from the primary power source (AC power). The AC light on the DC power supply with backup battery's circuit board and the PILOT indicator light on the Safe T Net 100 are both on when the Safe T Net 100 is operating from the primary power source.

Troubleshooting

The following table is a troubleshooting guide. It describes the symptoms, probable causes, and recommended actions for problems you may encounter with this accessory.

Table 5-2 Troubleshooting the DC Power Supply with Backup Battery

Condition	Symptom(s)	Probable Cause(s)	Recommended Action
Fault	• FAULT light on the circuit board is blinking.	• Low AC power. • No AC power. • Blown AC FUSE. • Blown BATTERY FUSE. • Low Battery.	1. Check primary AC power source. 2. Confirm that the incoming AC power connection is correct and secure. 3. Confirm that the connection from the batteries to the input terminal strip is correct and secure. 4. Check the continuity of the AC and BATTERY FUSES. If necessary, replace the fuse(s) as described in the following pages. 5. Check the condition of the batteries. If necessary, replace the batteries as described in the following pages. 6. If the condition continues, contact **Thermo** GasTech for further instruction.

Table 5-2 Troubleshooting the DC Power Supply with Backup Battery (Continued)

Condition	Symptom(s)	Probable Cause(s)	Recommended Action
No Power	• AC light on circuit board is not on.	• No AC power. • Blown AC FUSE.	1. Check primary AC power source. 2. Confirm that the incoming AC power connection is correct and secure. 3. Check the continuity of the AC FUSE. If necessary, replace the fuse as described in the following pages. 4. If the condition continues, contact **Thermo** GasTech for further instruction.
Incorrect Output Voltage	• Output between the terminals marked **DC OUTPUT** of the output terminal strip or the terminals marked **BATTERY CONNECTION** of the input terminal strip is not approximately 13.8 VDC.	• Incorrect battery connection. • Defective battery.	1. Confirm that the connection from the batteries to the input terminal strip is correct and secure. 2. Check the condition of the batteries. If necessary, replace the batteries as described in the following pages. 3. If the condition continues, contact **Thermo** GasTech for further instruction.

Table 5-2 Troubleshooting the DC Power Supply with Backup Battery (Continued)

Condition	Symptom(s)	Probable Cause(s)	Recommended Action
No Backup Power	• Backup power does not operate when incoming AC power is interrupted.	• Blown BATTERY FUSE. • Incorrect battery connection.	1. Confirm that the connection from the batteries to the input terminal strip is correct and secure. 2. Check the continuity of the BATTERY FUSE. If necessary, replace the fuse as described in the following pages. 3. If the condition continues, contact **Thermo** GasTech for further instruction.

Corrective Maintenance

This section describes procedures to replace the batteries and the AC or BATTERY FUSE.

Replacing the Batteries

Perform the following procedure to replace the batteries.

1. Unplug or turn off the incoming AC power at the power source end.
2. Unlock and open the housing door, then disconnect the battery wiring harness leads from the input terminal strip.
3. Disconnect the wiring harness leads from the batteries, and remove the batteries from the housing.
4. Place the replacement batteries in the same position as the old batteries.
5. Connect the wiring harness leads to the terminals on the replacement batteries. Connect the red leads to the positive (+) terminals; connect the black leads to the negative (–) terminals.
6. Connect the battery wiring harness leads to the BATTERY CONNECTION terminal on the input terminal strip. Connect the red lead to the positive (+) terminal; connect the black lead to the negative (–) terminal.
7. Close and lock the housing door, then plug in or turn on the incoming AC power at the power source end.

Replacing the Fuses

Perform the following procedure to replace the AC or BATTERY FUSE.

1. Unplug or turn off the incoming AC power at the power source end.
2. Unlock and open the housing door, then disconnect the battery wiring harness leads from the input terminal strip.
3. Pull the applicable fuse out of its holder.

CAUTION

For continuous protection against fire hazard and to maintain the UL listing (for the UL version) of this accessory, replace the fuse with the same type and rating.

4. Push the appropriate replacement fuse into the holder.
5. Connect the battery wiring harness leads to the BATTERY CONNECTION terminal on the input terminal strip. Connect the red lead to the positive (+) terminal; connect the black lead to the negative (–) terminal.

6. Close and lock the housing door, then plug in or turn on the incoming AC power at the power source end.

Alarm Horn

The alarm horn repeats the Safe T Net 100's audible alarms at a remote, non-hazardous location. The alarm horn is protected by a weatherproof housing. Wire the horn to the AC power terminal strip as described in the "External Alarm Wiring" section of Chapter 4, Installation. The horn operates on 115 VAC power. The alarm horn is an optional accessory.

The AC power terminal strip has separate relay output terminals for **ALARM**, **WARN**, and **FAIL**. The alarm horn only repeats the audible alarms for the relay output to which it is wired. For example, if the horn is wired to the terminal marked **WARN RELAY**, the horn only repeats the audible alarms of a warn condition.

NOTE

The alarm horn sounds a steady tone for all alarms. If the Safe T Net 100 sounds a pulsing tone, the alarm horn sounds a steady tone. When the alarm horn sounds an alarm, verify the visual and audible alarms at the Safe T Net 100 to determine the status of the Safe T Net 100.

AC Line Cord

The AC line cord is a 3-conductor cable for 115 VAC power connection. It is 8-feet long. The AC line cord includes a 3/4 in. x 1/2 in. reducer bushing and cord grip fitting for installation. See Chapter 4, Installation, for AC power wiring instructions. The AC line cord is an optional accessory.

Chapter 6

GAS DETECTION

Overview

This chapter lists remote transmitters that can be ordered with your Safe T Net 100. The remote transmitter includes the following:

- Amplifier
- Junction Box (if applicable)
- Sample housing (if applicable)
- Detector
- Operator's Manual

Tables 6-1 and 6-2 indicate the gas detection options offered for the Safe T Net 100.

Refer to the transmitter operator's manual for information on installation, operation, and maintenance of the transmitter.

Table 6-1 Remote Transmitter Type Detection

Description	Part Number STD Diffusion	Part Number STD Sample- Draw	Part Number FX-SMT	Part Number FX-SMTN	Part Number FX-IR
Ammonia (NH_3)	67-0027-09	68-0020-09	67-0024-09	67-0025-09	
Arsine (AsH_3)	67-0027-13	68-0020-13	67-0024-13	67-0025-13	
Carbon Monoxide (CO)	67-0027-01	68-0020-01	67-0024-01	67-0025-01	
Chlorine (Cl_2)	67-0027-04	68-0020-04	67-0024-04	67-0025-04	
Chlorine Dioxide (ClO_2)	67-0027-16	68-0020-16	67-0024-16	67-0025-16	
Combustibles	65-5001	68-0005	67-0021-01	N/A	67-0022-01
Diborane (B_2H_6)	67-0027-18	68-0020-18	67-0024-18	67-0025-18	
Fluorine (F_2)	67-0027-07	68-0020-07	67-0024-07	67-0025-07	
Hydrogen Chloride (HCl)	67-0027-05	68-0020-05	67-0024-05	67-0025-05	
Hydrogen Cyanide (HCN)	67-0027-08	68-0020-08	67-0024-08	67-0025-08	
Hydrogen Fluoride (HF)	67-0027-06	68-0020-06	67-0024-06	67-0025-06	
Hydrogen Sulfide (H_2S)	67-0027-02	68-0020-02	67-0024-02	67-0025-02	
Nitric Oxide (NO)	67-0027-14	68-0020-14	67-0024-14	67-0025-14	
Nitrogen Dioxide (NO_2)	67-0027-15	68-0020-15	67-0024-15	67-0024-15	
Oxygen (O_2)	67-0027-03	68-0020-03	67-0024-03	67-0025-03	

Table 6-1 Remote Transmitter Type Detection (Continued)

Description	Part Number STD Diffusion	Part Number STD Sample- Draw	Part Number FX-SMT	Part Number FX-SMTN	Part Number FX-IR
Ozone (O_3)	67-0027-12	68-0020-12	67-0024-12	67-0025-12	
Phosphine (PH_3)	67-0027-10	68-0020-10	67-0024-10	67-0025-10	
Silane (SiH_4)	67-0027-11	68-0020-11	67-0024-11	67-0025-11	
Sulfur Dioxide (SO_2)	67-0027-17	68-0020-17	67-0024-17	67-0025-17	
Detection Operator's Manual (Toxic/O_2)	71-0090	71-0114	71-0085	71-0085	
Detection Operator's Manual (Combustibles)	71-1420-10	71-1420-10	71-0085	N/A	71-0084

Table 6-2 Internal Amplifier Versions (Includes STN100 base unit and Amplifier card)

Description	Part Number Standard Diffusion	Part Number, Detection Manual Inserts
Carbon Monoxide (CO)	73-1422	71-1420-02
Combustibles	72-1301	71-1420-09
Hydrogen Sulfide (H_2S)	73-1421	71-1420-05
Oxygen (O_2)	72-1302	71-1420-07

Appendix A

Parts List

Table A-1 Parts List

Part No.	Description
43-4110	AC Fuse, 3AG-1/2A (AGC-1/2)
43-4181	AC and Battery Fuse, 3AG-10A (AGC-10), for DC Power Supply with Backup Battery)
43-4232	DC Fuse (1 amp), Size F
47-1011	AC Line Cord, 8-foot
49-1551	12 VDC Battery (for DC Power Supply with Backup Battery)
49-8103	DC Power Supply with Backup Battery (non-UL listed)
49-8106	DC Power Supply with Backup Battery (UL listed)
52-0005	Alarm Horn
52-1016	Buzzer (for DC Power Supply with Backup Battery)
71-1300	Safe T Net 100 Quick Reference Card
71-1420	Safe T Net 100 Operator’s Manual

Combustible Gas Diffusion Transmitter Operator's Manual

Proprietary Statement

Thermo GasTech owns proprietary rights in the information disclosed within. By receiving this document, the recipient agrees that neither this document nor the information disclosed within nor any part shall be reproduced or transferred to other documents or used or disclosed to others for manufacturing or for any other purpose except as specifically authorized in writing by **Thermo** GasTech.

Copyright Statement

Information contained in this document is protected by copyright. No part of this document may be photocopied, reproduced, or translated to another program or system without prior written authorization from **Thermo** GasTech., © 2000, **Thermo** GasTech.

Trademark Statement

Protected through use and/or registration in the United States and many foreign countries are the trademarks and service marks of **Thermo** GasTech. The use of the ® symbol indicates registration in the United States only; registrations may not have been issued at present in other countries. All other product names and logos are trademarks of their respective owners.

GASTECH® is a trademark of **Thermo** GasTech and is registered with the U.S. Patent and Trademark Office.

Disclaimer

Under no circumstances will **Thermo** GasTech be liable for any claims, losses, or damages resulting from or arising out of the repair or modification of the equipment by a party other than **Thermo** GasTech or its authorized service representatives, or by operation or use of the equipment other than in accordance with the printed instructions provided by **Thermo** GasTech or if the equipment has been improperly maintained or subject to neglect or accident. Any of the foregoing will void the warranty.

Export Statement

Export of the information and products in this manual from the U.S.A., or re-export from another country, may require written authorization from the U.S. Department of Commerce. Printed in the U.S.A.

Revisions to Manual

All information contained in this manual is believed to be true and correct at the time of printing. However, as part of its continuing efforts to improve its products and their documentation, **Thermo** GasTech reserves the right to make changes at any time without notice. Any revised copies of this manual can be obtained by writing **Thermo** GasTech.

WARNING

THIS INSTRUMENT IS DESIGNED TO DETECT ONE OR MORE OF THE FOLLOWING:

FLAMMABLE VAPORS, OXYGEN CONTENT, AND/OR TOXIC GAS AND TO GIVE WARNING BEFORE THEY REACH HARMFUL CONDITIONS. IN ORDER TO ENSURE THAT IT WILL WARN OF DANGEROUS CONCENTRATIONS, IT IS ESSENTIAL THAT THE INSTRUCTIONS IN THIS MANUAL, PARTICULARLY THOSE CONCERNING START UP, OPERATION, CALIBRATION, AND MAINTENANCE, BE READ, UNDERSTOOD, AND FOLLOWED.

NOTATION CONVENTIONS

Notices are used in this operator's manual to alert you to hazardous conditions to person or instrument and to notify you of additional information. This operator's manual uses the following notices.

WARNING

Notifies you of potential danger that can result in personal injury or death.

CAUTION

Notifies you of potential damage to equipment.

NOTE

Notifies you of additional or critical information.

SERVICE POLICY

Thermo GasTech maintains an instrument service facility at the factory as well as authorized service facilities around the world. Should your instrument require service, you may contact us toll free at **1-877-GASTECH (427-8324) for US only or 1-510-745-8700**, or visit our website www.gastech.com for authorized service locations.

For warranty or non-warranty repairs, call us to complete a Return Material Authorization (RMA) form, obtain billing and shipping information and tell us the nature of the problem. For non-warranty repairs, you will need to provide a purchase order number. If you need to set a limit to the repairs costs, state a “Not to Exceed” figure. If you need a quotation before you can authorized the repair costs, so state, but understand this will incur additional costs and may delay processing of the repair.

You may send the unit, prepaid, to: **Thermo** GasTech**, 8407 Central Ave., Newark, CA 94560-3431, Attn.: Service Department**. Enclose the copy of the RMA (Return Material Authorization) that was previously faxed to you. Pack the instrument and all its accessories (preferably in its original packing) and any special instructions.

Repairs are warranted for 90 days from the date of shipment. Sensors have individual warranties.

NOTE

Thermo GasTech assumes no liability for work performed by unauthorized service facilities.

WARRANTY STATEMENT

Thermo GasTech (the “Company”) warrants that the Products will operate substantially in conformance with the Company’s published specifications, when subjected to normal, proper, and intended usage by properly trained personnel, for a period of one (1) year after shipment to Customer (the “Warranty Period”). The Company agrees during the Warranty Period, provided it is promptly notified in writing upon the discovery of any defect and further provided that all costs of returning the defective Products to the Company are prepaid by Customer, to repair or replace, at the Company’s option, defective products so as to cause the same to operate in substantial conformance with said specifications. Replacement parts may be new or refurbished, at the election of the Company. All replaced parts shall become the property of the Company.

Lamps, pump diaphragms/valves, batteries, fuses, bulbs, and other expendable items are expressly excluded from the warranty.

The Company’s sole liability with respect to equipment, materials, parts, or software furnished to the Company by third party suppliers shall be limited to the assignment by the Company to Customer of any such third-party supplier’s warranty, to the extent the same is assignable. In no event shall the Company have any obligation to make repairs, replacements, or corrections required, in whole or in part, as the result of (i) normal wear and tear, (ii) accident, disaster, or event of force majeure, (iii) misuse, fault, or negligence of or by Customer, (iv) use of the Products in a manner for which they were not designed, (v) causes external to the Products such as, but not limited to, power failure or electrical power surges, or (vi) use of the Products in combination with equipment or software not supplied by the Company.

ANY INSTALLATION, MAINTENANCE, REPAIR, SERVICE, RELOCATION, OR ALTERATION TO OR OF, OR OTHER TAMPERING WITH, THE PRODUCTS PERFORMED BY ANY PERSON OR ENTITY OTHER THAN THE COMPANY WITHOUT THE COMPANY’S PRIOR WRITTEN APPROVAL, OR ANY USE OF REPLACEMENT PARTS NOT SUPPLIED BY THE COMPANY, SHALL IMMEDIATELY VOID AND CANCEL ALL WARRANTIES WITH RESPECT TO THE AFFECTED PRODUCTS.

THE OBLIGATION TO REPAIR OR REPLACE A DEFECTIVE PRODUCT SHALL BE THE SOLE REMEDY OF CUSTOMER IN THE EVENT OF A DEFECTIVE PRODUCT. EXCEPT AS EXPRESSLY PROVIDED IN THIS SECTION, THE COMPANY DISCLAIMS ALL WARRANTIES, WHETHER EXPRESS OR IMPLIED, ORAL OR WRITTEN, WITH RESPECT TO THE PRODUCTS, INCLUDING WITHOUT LIMITATION ALL IMPLIED WARRANTIES OF MERCHANTABILITY OR FITNESS FOR ANY PARTICULAR PURPOSE. THE COMPANY DOES NOT WARRANT THAT THE PRODUCTS ARE ERROR-FREE OR WILL ACCOMPLISH ANY PARTICULAR RESULT.

TABLE OF CONTENTS

Chapter 1

Introduction

Overview 1
Description 1
Specifications 4

Chapter 2

Installation

Mounting the Transmitter 5
Wiring theTransmitter 6
Starting Up 7

Chapter 3

Calibration

Calibration Kit 9
Calibration 9

Chapter 4

Maintenance

Preventive Maintenance 15
Troubleshooting 16
Replacing the Detector 18
Replacing the Amplifier 19

Appendix A

Parts List 21

Chapter 1

INTRODUCTION

Overview

These instructions describe the components of the combustible gas diffusion transmitter and how to install, start up, maintain, and calibrate the transmitter.

Description

A combustible gas diffusion transmitter includes an amplifier, junction box, and detector assembly.

Detector

The complete combustible gas detector assembly includes the sensing elements, flame arrestor, detector housing, and detector leads.

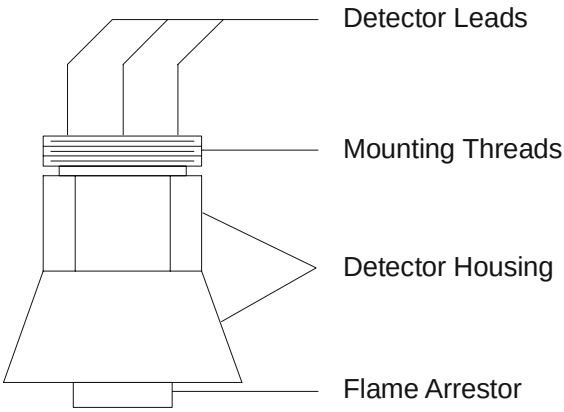

Figure 1-1 Combustible Gas Detector

SENSING ELEMENTS

Two sensing elements are mounted within the detector assembly. Through a series of thermal and electronic reactions, the sensing elements produce the reading on the display screen.

CAUTION

Catalyst poisons such as chlorine and silicone compounds can desensitize the detector sensing elements. A "poisoned" detector is less responsive or unresponsive to combustible gases. Avoid exposing the detector to catalyst poisons or samples that contain vapor from catalyst poisons.

FLAME ARRESTOR

The porous flame arrestor allows the sample to diffuse into the detector and contact the sensing elements, and contains any sparks or flames within the detector.

DETECTOR HOUSING

The sensing elements and flame arrestor are mounted within the detector housing. Mounting threads (1/2 in. NPT) at the top of the detector housing allow the detector assembly to be screwed into the junction box.

DETECTOR LEADS

Three color-coded leads extend from the top of the detector assembly and connect to the amplifier.

Amplifier

The amplifier transmits the output of the detector to the controller. The amplifier includes the terminal blocks, zero and span potentiometers, volt adjust potentiometer, and test jacks. (refer to Figure 1-2).

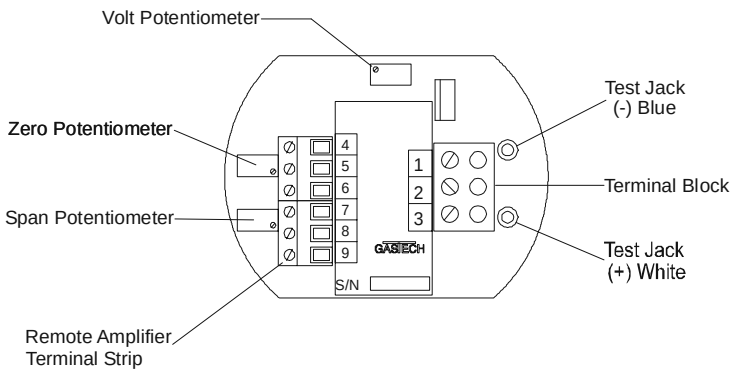

Figure 1-2 Combustible Gas Diffusion Transmitter Component Location

Amplifier Terminal Blocks

The 6-position detector terminal block connects the amplifier to the combustible gas detector. The 3-position terminal block connects the amplifier to the controller.

Zero Potentiometer

The zero potentiometer adjusts the gas-free output of the amplifier during start-up and calibration procedures.

Span Potentiometer

The span potentiometer adjusts the response output of the amplifier during the calibration procedure.

Volt Potentiometer

The volt potentiometer is used for setting the voltage to the detector, and is factory set. The user should not adjust this component.

Test Jacks

The color-coded test jacks allow you to measure the test signal (100 to 500 mV proportional to the 4 to 20 mA analog output signal) of the amplifier during start-up and calibration procedures. The white jack is positive (+) and the blue jack is negative (–).

Junction Box

The explosion-proof junction box protects the amplifier and connections from the monitoring environment for remote installation. The junction box has two 3/4 in. NPT conduit hubs, one for the detector and one for wiring to the controller. The amplifier is mounted within the junction box.
The threaded cover on the front of the junction box allows access to the interior.

Specifications

Table 1-1 Specification

Detection Range	0 to 100%LEL
Low Alarm Setting*	10%LEL
High Alarm Setting*	50%LEL
Amplifier Output	4 to 20 mA analog signal (to controller) 100 to 500 mV analog test signal (at test jacks)
Response Time	90% in less than 30 seconds
Accuracy	± 5% of detection range
Repeatability	± 2% of detection range
Temperature Range	-4°F (-20°C) to 140°F (60°C)
Area Classification	Class I, Division 1, Groups B, C, and D
Standard Accessory	Operator's Manual
Optional Accessory	Calibration kit
* Indicates standard specifications. Can be changed by the user.	

Chapter 2

INSTALLATION

This section describes mounting and wiring procedures for the combustible gas transmitter assembly.

Mounting the Transmitter

CAUTION

Mount the junction box with the detector pointing down.

1. Select a mounting area that is representative of the monitoring environment. Choose an area where the transmitter is not likely to be accidentally bumped or disturbed. For lighter gases (hydrogen and methane for example), mount the junction box near the ceiling. For heavier gases, or for vapors from liquids, mount the junction box near the floor.
2. Secure the junction box to a vertical surface using 1/4 in. bolts or screws through the mounting lugs.

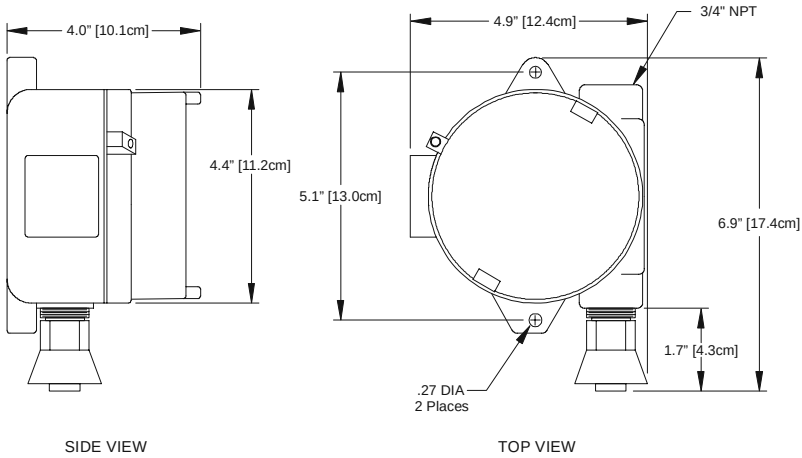

Figure 2-1 Outline and Mounting Dimensions

Wiring the Transmitter

WARNING

Make sure all power to the controller is turned off during all wiring procedures.

Use a three-conductor, shielded cable, or run the wiring within metal conduit to reduce Radio Frequency Interference (RFI) and Electromagnetic Interference (EMI).

Use 18 AWG wire or larger. The one-way wire resistance must not exceed 25 ohms.

1. Remove the junction box cover.
2. If you are using shielded cable, screw a cable bushing into the top conduit hub of the junction box, then route the cable through the bushing. Do not ground the shield at the junction box. If you are using metal conduit, screw the end of the conduit directly into the top conduit hub of the junction box.
3. Connect the detector leads to the detector terminal block of the amplifier as follows:
   Green to terminal 4 (R)
   Red to terminal 5 (A)
   White to terminal 6 (C).
   The position for each color is marked on the amplifier PC board.
4. Guide a three-conductor, shielded cable or three wires in conduit through the top conduit hub of the junction box, and connect the wires to the controller connection block.of the amplifier and to the controller terminal strip as shown in the following table.

Table 2-1 Combustible Transmitter Wiring Connections

Amplifier Terminal Block	Controller Terminal Strip
1 (+)	+
2 (-)	-
3 (FB)	FB

5. Ground the shielded cable or metal conduit by connecting it to the SHIELD terminal at the controller.

CAUTION

Always ground the cable shield at the controller and never at the transmitter.

Start Up

Complete the following procedure to place the controller and the combustible gas transmitter into normal operation. If more than one combustible gas transmitter is in use, perform the start-up procedure for each transmitter.

Preparing for Start Up

1. Complete the mounting and wiring procedures described earlier.
2. Connect incoming power to the controller as described in the Installation chapter of the controller manual.

NOTE

Allow the detector to warm-up for a minimum of 15 minutes after power is introduced to the controller.

Setting the Channel Parameters at the Controller

When you install the combustible transmitter, set the parameters for that channel at the controller. For instructions on setting the channel parameters at the controller, see the Start Up section of the controller manual. Standard settings for the combustible gas transmitters are listed in Table 2-2.

Table 2-2 Standard Ranges and Alarm Setpoints for Combustible Gas Transmitter

Gas	Unit	Range (%LEL)	Low Alarm (%LEL)	High Alarm (%LEL)	Latch or Self Reset	Rising or Falling
Combustible	%LEL	0-100	10	50	Latch	Rising

Setting the Zero Reading

WARNING

In locations classified as hazardous (National Electric Code Article 500) and with power on, the area must be certified gas-free before you open the junction box cover. Consult prevailing national, local, and corporate requirements for certification. If you suspect the presence of combustible gas during the start-up procedure, use the calibration kit described in the calibration chapter and the zero-emission are cylinder to introduce fresh air to the detector and confirm an accurate zero setting.

1. Confirm that the controller is on.
2. Remove the junction box cover.

NOTE

Some controllers have a feature that enables you to disable the alarm LEDs, buzzer, and relays during the calibration procedures, response tests, and so on. Refer to the controller manual for information. Make sure you re-enable full alarm functionality after the calibration procedure is complete.

3. If the alarms have not been disabled, disconnect one of the wires from the terminal block, and confirm that the controller FAULT or FAIL light is on and the buzzer sounds. Reconnect the wire to the terminal block.
4. Plug the positive multimeter lead into the white(+) test jack; plug the negative lead into the blue (–) test jack.
5. Confirm 100 mV on the multimeter. If necessary, adjust the zero potentiometer until the reading is 100 mV.

CAUTION

Do not adjust the span potentiometer during the start-up procedure.

6. Remove the multimeter leads from the test jacks, and secure the junction box cover to the junction box.

The combustible gas transmitter is now in operation.

Chapter 3

CALIBRATION

Calibration Kit

This section describes the optional calibration kits used for calibrating the combustible gas transmitters. See the Parts List of this insert for ordering information.

WARNING

Accurate calibration of the transmitter is essential to ensure accurate readings of combustible gas concentration. Incorrect calibration can impair the performance of the transmitter and place you in unnecessary danger if hazardous conditions exist.

The combustible gas calibration kits include the following components:

- Storage Case: Safely houses the components of the calibration kit while you are not using them.
- Gas Cylinder: Contains known concentrations of gas. Gas cylinders are available from **Thermo** GasTech for a variety of combustible gases.
- Regulator: Controls the gas flow to the detector.
- Test Cup: The test cup slides over the detector. Two screws secure the cup to the detector.
- Tubing: The 5/16 inch vinyl tubing directs the gas from the regulator to the test cup.

Calibration

This section describes how to prepare the Calibration kit and transmitter for calibration, calibrate the transmitter, and return the transmitter and the controller to normal operation.

Preparing for Calibration

This section describes the procedure necessary for preparing the combustible gas transmitter for calibration. The procedure includes step-by-step instructions for preparing the Calibration kit and the transmitter.

WARNING

Calibrate the transmitter in a fresh air environment (environment known to be free of combustible gas).

Preparing the Gas Cylinder

1. Make sure the flow control knob on the regulator is closed.

CAUTION

Closing the flow control knob too tightly will damage the regulator.

2. Carefully screw the regulator onto the gas cylinder.
3. Attach the sample tubing to the regulator.
4. Attach sample tubing from the outlet connector of the regulator to the hose connection tube of the test cup.
5. Slide the test cup onto the detector, and secure it with the screws. Do not overtighten the screws.

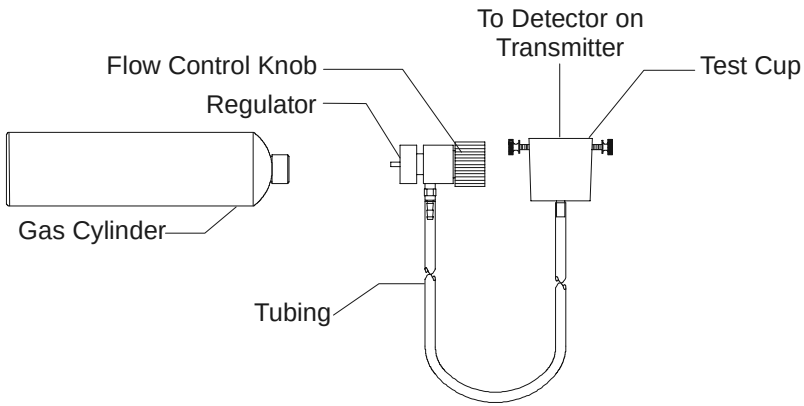

Figure 3-1 Diffusion Calibration Kit with Gas Cylinder

SETTING THE ZERO READING

WARNING

In locations classified as hazardous (National Electric Code Article 500) and with power on, the area must be certified gas-free before you open the junction box cover. Consult prevailing national, local, and corporate requirements for certification.

1. Unscrew the junction box cover.
2. Select the millivolt (mV) range on the multimeter. Plug the positive multimeter lead into the white(+) test jack; plug the negative lead into the blue (–) test jack.

NOTE

Verify that the transmitter is in a "fresh air" environment (known to be free of combustible gases and of normal oxygen content).

If you cannot verify the absence of combustible gas in the calibrating environment, you will need to use a zero-emission air cylinder to introduce combustible-gas-free air to the detector (see Appendix A, parts list). The zero-emission air cylinder is not part of the standard calibration kit.

3. If you are not using the zero-emission air cylinder, go to step 5. If using the zero-emission air cylinder, attach the tubing from the regulator to the zero-emission air cylinder.
4. Open the flow control knob on the regulator.
5. When the reading on the multimeter stabilizes, confirm a reading of 100 mV. If necessary, adjust the zero potentiometer on the amplifier until the multimeter reading is 100 mV.
6. If you used the zero-emission air cylinder, close the valve on the regulator, and remove the regulator from the cylinder. Leave the multimeter leads connected to the amplifier test jacks.

SETTING THE RESPONSE READING

WARNING

In locations classified as hazardous (National Electric Code Article 500) and with power on, the area must be certified gas-free before you open the junction box cover. Consult prevailing national, local, and corporate requirements for certification.

Either the 4 to 20 mA analog signal at the output terminals of the transmitter amplifier or the 100 to 500 mV test signal at the test jacks of the transmitter amplifier can be used to calibrate the transmitter. The following formulas describe how to calculate the output signal and the test signal as a function of test gas concentration:

Output signal =
((test gas concentration/full scale) x 16 mA) + 4 mA

Test signal =
((test gas concentration/full scale) x 400 mV) + 100 mV

The following instructions describe how to use the test signal to calibrate.

1. If not already connected, attach the regulator to the gas cylinder.
2. Open the flow control knob on the regulator.
3. When the reading on the multimeter stabilizes, compare the reading to the calibration chart.

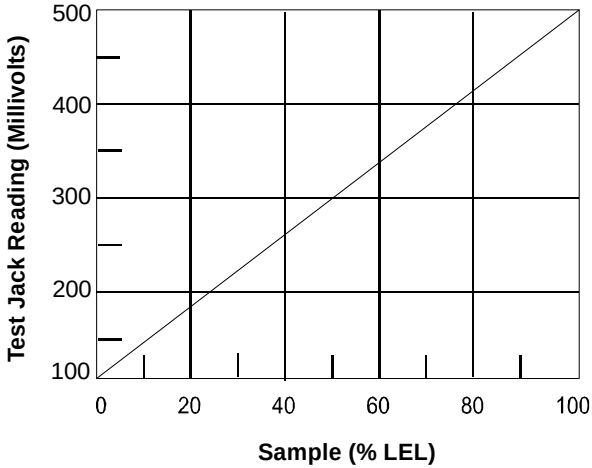

Figure 3-2 Calibration Chart, 0-100% LEL

If the multimeter reading corresponds to the concentration of the gas cylinder, the transmitter is calibrated correctly, go to step 5.

CAUTION

If the reading on the multimeter has not stabilized after two minutes, match the reading two minutes to the calibration chart

4. Adjust the reading on the multimeter with the span potentiometer to match the calibration chart.
5. Close the flow control knob.
6. Remove the multimeter leads from the test jacks, and secure the junction box cover to the junction box.
7. Perform the steps described in the Returning to Normal Operation section.

Returning to Normal Operation

This section describes how to put the combustible gas transmitter into normal operation and to disassemble the calibration kit.

1. Remove the sample tubing from the test cup.
2. Loosen the screws and pull the cup off the detector.
3. Unscrew the regulator from the gas cylinder.
4. Store the components of the calibration kit in the storage case. Leave the components of the calibration kit connected for convenience.

The combustible gas transmitter is now ready for normal operation.

Chapter 4

MAINTENANCE

WARNING

If possible perform all maintenance activities in a non-hazardous environment. Calibrate the transmitter in a fresh air environment (environment known to be free of combustible gas).

This section describes preventive and corrective maintenance procedures for the combustible gas transmitter. A preventive maintenance schedule describes daily, monthly, and quarterly procedures to ensure the performance and durability of the transmitter. The troubleshooting guide describes problems you may encounter with the combustible gas transmitter. Procedures for replacing components of the transmitter are at the end of this chapter.

Preventive Maintenance

This schedule describes daily, weekly, monthly, and quarterly procedures to ensure the performance and durability of the combustible gas transmitter.

Daily

1. Confirm that the controller is on. If the controller is not on, see the Troubleshooting section in the Maintenance chapter of the controller manual.
2. Confirm that the display reading is near 0, and investigate significant changes in the display reading.

Monthly

1. Assemble the calibration kit, and introduce the calibration gas to the detector as described in the Calibration chapter.

NOTE

The concentration of the gas cylinder used for this procedure should be approximately 50% of the fullscale value.

2. Confirm that the display reading for the appropriate channel increases as the gas is introduced to the detector.
3. Confirm that the status indicator lights and buzzer operate correctly as the reading rises above the alarm setpoints.

4. Disassemble and store the calibration kit as described in the calibration chapter.

Quarterly

CAUTION

Calibrate the combustible gas transmitter at least once every 3 months. Some applications may require a more frequent calibration schedule.

Perform the calibration procedure as described in the Calibration chapter of this manual.

Troubleshooting

This troubleshooting guide describes symptoms, probable causes, and suggested responses for problems you may encounter with the combustible gas transmitter.

Fault Condition

Symptoms:

The controller displays one or more of the following fault indications:

- FAULT or FAIL light is on
- Audible alarm
- Fault relay in the fault position
- In addition, some types of controllers will display a negative reading.

Probable Causes:

- The detector or amplifier wiring connections are incorrect or incomplete.
- Detector circuit drift.
- The detector or amplifier is bad.

Suggested Response:

1. Confirm that the wiring to the controller terminal strip and to the terminal block of the amplifier is complete and correct.
2. Confirm that the detector leads are secure and connected correctly to the terminal block of the amplifier.
3. Set the zero signal as described in the Start Up section in the Installation chapter of this manual.

If the fault condition continues, further isolate the problem as follows:

4. Disconnect the transmitter wires at the controller terminal strip, and connect them to the terminals of a different channel or controller known to be operating correctly. If the fault condition clears, the controller terminal strip or the controller main circuit board is bad. Contact **Thermo** GasTech for further instruction. If the fault condition continues, go to the next step.
5. Disconnect the detector from the amplifier, and connect them to a combustible gas amplifier known to be operating correctly. If the fault condition clears, replace the detector. If the fault condition continues, go to the next step.
6. Connect a detector known to be operating correctly to the amplifier in question. If the fault condition clears, replace the amplifier.
7. If the fault condition continues, contact **Thermo** GasTech for further instruction.

Difficult or Unable to Calibrate, Slow or No Response

Symptoms:

- Unable to accurately calibrate the transmitter.
- Slow or no response to gas during monthly response test.
- Transmitter requires frequent calibration.

NOTE

Under normal conditions, the transmitter requires calibration approximately once every 3 months. Some applications may require a more frequent calibration schedule.

Probable Cause:

- Sample in gas cylinder is low or exhausted.
- Detector voltage is too low.
- Bad detector.

Suggested Response:

1. Make sure the gas cylinder has an adequate supply of fresh gas.
2. Replace the detector.
3. If calibration difficulties continue, contact **Thermo** GasTech for further instruction.

Replacing the Detector

1. Unplug or turn off all incoming power at the power source.
2. Unscrew the junction box cover.
3. Disconnect the detector leads from the detector connection block of the amplifier.
4. Unscrew the detector from the junction box and pull the leads out through the hub.
5. Guide the leads of the replacement detector through the conduit hub and screw the detector into the junction box.
6. Connect the detector leads to the detector terminal block of the amplifier as follows:
7. The position for each color is marked on the amplifier PC board.

   Green to terminal 4 (R)
   Red to terminal 5 (A)
   White to terminal 6 (C)

8. Perform the calibration procedure described in the Calibration chapter of this manual.

Replacing the Amplifier

1. Turn off all incoming power at the power source.
2. Unscrew the junction box cover.
3. Disconnect the detector leads from the amplifier.
4. Disconnect the wires from the controller terminal strip.
5. Remove the three screws that secure the amplifier circuit board to the base plate standoffs.
6. Remove the amplifier from the junction box.
7. Place the new amplifier in the junction box so the holes in the amplifier are over the standoffs.
8. Screw in the three screws removed in step 5 to secure the amplifier to the standoffs.
9. Connect the detector leads to the new amplifier.
10. Connect the controller wiring to the new amplifier.
11. Perform the start-up procedure described in the Installation chapter of this manual.
12. Perform the calibration procedure described in the Calibration chapter of this manual.

Appendix A

PARTS LIST

Table A-1 Parts List

Part No.	Description
06-1002	Tubing, vinyl, 5/16", for calibration kit
25-0102-01	Junction box housing
25-0104	Junction box cover
35-5175	Splash guard
57-7045-01	Combustible gas amplifier
61-0101	Combustible gas detector
65-5001	Combustible gas diffusion transmitter
71-0024-01	Combustible Gas Diffusion Transmitter Manual
81-0002	Gas cylinder, hydrogen in air (50% LEL)
81-0004	Gas cylinder, propane in air (45% LEL)
81-0007	Gas cylinder, hexane in air (40% LEL)
81-0012	Gas cylinder, methane in air (50% LEL)
81-0076	Gas cylinder, zero-emission air
81-1003	Regulator
81-1110	Test Cup
81-6413-01	Calibration kit, methane
81-6413-02	Calibration, hydrogen
81-6413-03	Calibration, propane
81-6413-04	Calibration kit, hexane
82-0005	Adjustment screwdriver

Millennium Smoke & Oil Mist Detector

APM - Airbourne Particle Monitor

The Millennium Smoke & Oil Mist Detector (Air Particle Monitor - APM) is the industry's only infrared optical monitor that is certified for use in hazardous areas for constant, reliable monitoring of ambient air for products of combustion such as smoke, oil mist, carbon, dust and ash.

This unique product is the ONLY detector of it's kind that's certified explosion proof — ideally suited for a wide variety of industrial applications. Proven installed base includes Class 1, Division 1 areas requiring accurate air particle monitoring such as air ducts, battery rooms, engine rooms, compressor stations, offshore living quarters and HVAC air intake points, to name just a few.

- **Explosion-proof, Class 1, Division/Zone 1 Approved**
- **2nd Generation Infrared Optical Sensor Technology**
- **Operating TemperatureRange -40°C to +75°C**
- **4-20mA Analog & Relay Output Configurations**
- **Remote Sensor Separation - 600m (2000ft) And A Variety of Duct Mount Assemblies**
- **Intiutive Menu System, Zero in 60 Seconds From Start to Finish**
- **Field Adjustable Sensitivity Settings**
- **Not Affected By High Volume Air Velocity**
- **Multi-language, Bright Scrolling LED Display Allows Operators To Fine Tune At Installation Site**

The advanced sensor technology has several key performance features: it utilizes a powerful, single-beam IR lamp with no mirrors to ever become contaminated — sensor performance is not effected by high volume air velocity — it's field adjustable zero level of obscuration and multiple sensitivity settings allows for fine tuning within specific application conditions to optimize performance and eliminate false alarms — and it comes available with multiple installation options to suit any application.

The Millennium Series controller is an innovative line of explosion-proof industrial detectors. It's microcontroller provides fast, accurate and continuous monitoring in hazardous area environments. The 4-20 analog signal and Form 'C' mechanical relays easily integrate into industrial safety systems. The compact controller with power disconnect switch simplifies maintenance, a scrolling LED simplifies calibration and configuration, meter jacks for easy current loop monitoring and optical self-test. The industrial micro-controller based circuits are conformally coated for mold and humidity protection.

Net Safety Millennium Smoke and Oil Mist Detector is market proven within a variety of specialized applications worldwide, providing superior performance and effectiveness.

APPLICATIONS

Gas Compressor Stations, FSPO/Tanker Hull Chambers, Gas Turbine Engine Enclosures, Marine Battery Rooms, Engine Rooms, Duct Monitoring, Chemical Storage, Industrial Manufacturing, and HVAC Systems.

NET SAFETY MONITORING INC.

EMERSON™
Process Management

Millennium Smoke & Oil Mist Detector

Specifications

	MILLENNIUM APM SENSOR SPECIFICATIONS
Temperature Range	-40°C to +75°C (-40°F to +167°F)
Weight	Aluminum: 0.9 Kg (2.0 lbs.) | Stainless Steel: 1.4 Kg (3.0 lbs.)
Enclosure Material	Anodized / Powder coated aluminum (optional stainless steel)
Certifications	**CSA | NRTL/C** — Class I, Division 1, Groups B, C and D, Ex d II B+H2 T5. **ATEX** — Ⓔx II 2 G Ex d II B+H2 T5 | **IEC Rating —** Ex d IIB+H2 T5 (Class I, Zone 1 Group IIB+H2 T5) Temperature code T4A | Enclosure Type NEMA 4X
Sensor Warranty	2 Years

	MILLENNIUM TRANSMITTER/CONTROLLER	
Operating Voltage Range	10.5 to 32.0 V dc	
Power Consumption	Nominal 74 mA, 2.0 W — Maximum 132 mA, 3.24 W @ 24 Vdc (with APM Sensor)	
Operating Temperature and Humidity Range	Operational -50°C to +85°C (-58°F to +185°F) / Certified -40°C to +85°C (-40°F to +185°F) 0 to 100% Relative humidity, non-condensing	
Output(s)	**Analog 4-20 mA:** Max. loop impedance of 800 Ohms at 32 V dc or 150 Ohms at 10.5 V dc. Isolated or non-isolated loop supply	**Relays:** 3 Form C contacts for Fault, Window Condition, and Smoke Status. Rated 5 Amp at 30Vdc / 250 Vac Selectable energized/de-energized, latching/non-latching
Enclosure Material	Powder coated Copper Free Cast Aluminium (316 Stainless Steel Optional)	
Weight	3.2 Kg (7.0 lbs)	
Electronics Warranty	3 Years	
Alpha-numeric display	Bright 8-digit LED scrolling type display - English, French and Spanish languages available	
Unique Features	Local Power Switch and Meter Test Jacks on faceplate for easy maintenance. Easy to read instructions for one-person, non-intrusive calibration.	
Certifications	**CSA | NRTL/C** — Class I, Division 1, Groups B, C and D **ATEX** — CE 0575 Ⓔx II 2 G Ex d II B+H2 T5 | **ABS** — 1-1-4/7.7, 4-8-3/1.11, 4-8-3/Table 2 Temperature code T5 | Enclosure Type NEMA 4X	

ORDERING INFORMATION

MLP-AR-APM-OP-SEP 4-20mA Analog and Relay Outputs, APM Sensor with Separation Box Included

ADDITIONAL APPROVAL : —X (ATEX)

ENCLOSURE MATERIAL: Stainless Steel (—S) [Aluminum is Standard]

Ordering Matrix Example:

MLP-AR-APM-OP-SEP-X-S (Transmitter - Output - Sensor - Separation Box - Additional Approval - Optional Enclosure Material)

NET SAFETY MONITORING INC.

EMERSON™
Process Management

Millennium Smoke & Oil Mist Detector

Specifications con't - Accessories

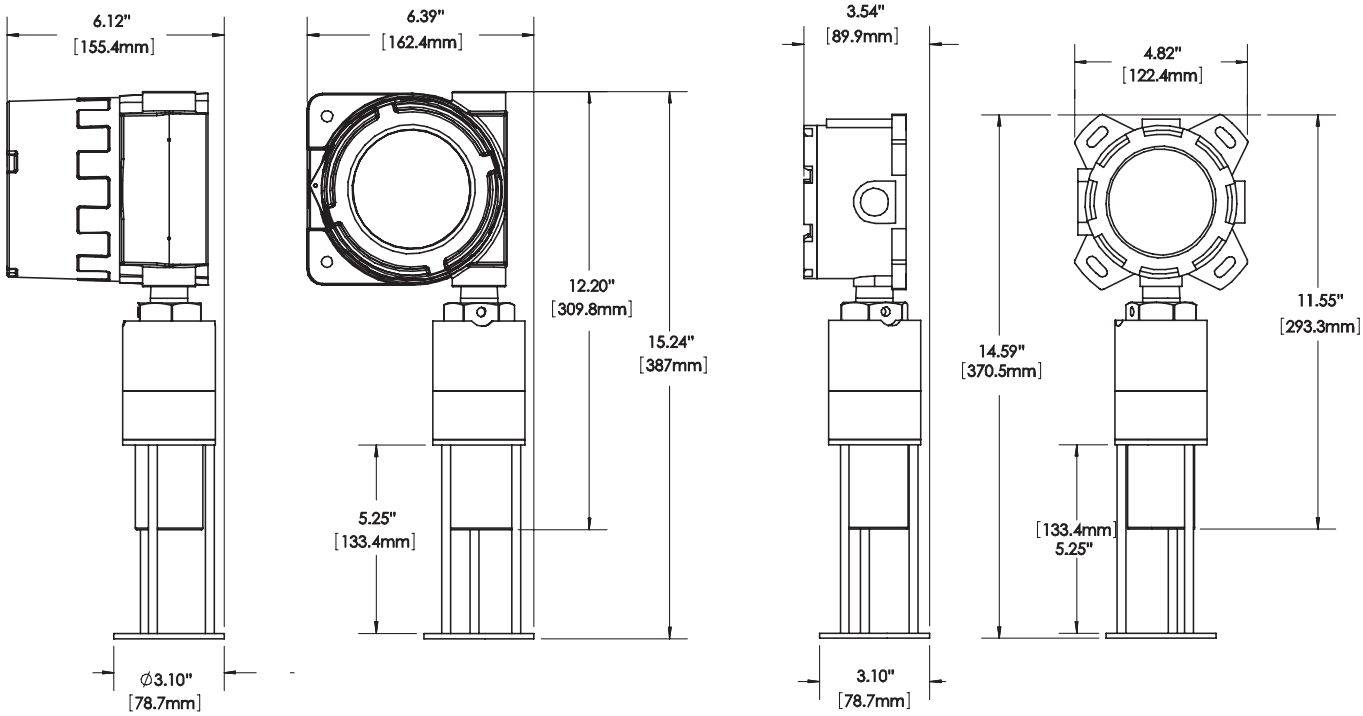

ACCESSORIES

UN-MK-31	1" Pipe Mounting kit - Stainless steel
UN-MK-32	2" Pipe Mounting kit - Stainless steel
UN-MK-33	3" Pipe Mounting kit - Stainless steel
SSK-51	1" Pipe Mounted Sun shade kit/rain guard, stainless steel - includes UN-MK-31
SSK-52	2" Pipe Mounted Sun shade kit/rain guard, stainless steel - includes UN-MK-32
SSK-53	3" Pipe Mounted Sun shade kit/rain guard, stainless steel - includes UN-MK-33
UDM-001	Universal duct mount assembly with 1m inlet sampling pipe, stainless steel
UDM-002	Universal duct mount assembly with 1.5m inlet sampling pipe, stainless steel
UDM-003	Universal duct mount assemblY, stainless steel
UDM-EX1	1M extension - for use the UDM-001 & UDM-002, stainless steel
UDM-EX2	1.5M extension - for use the UDM-001 & UDM-002, stainless steel

AIR PARTICLE MONITOR

(INFRARED SMOKE DETECTOR)

USER MANUAL

Models:

MLP-AR-APM-OP

MLP-AR-APM-OP-X

MLP-AR-APM-OP-SS-X

MLP-AR-APM-NOP

&

(All available options)

Optical Protection (OP) version shown

MLP-AR-APM-OP

ISO 9001:2000

QMI REGISTERED

Part number: MAN-0077 Rev 03
March 25, 2010

IMPORTANT INFORMATION

This manual is for informational purposes only. Although every effort has been made to ensure the correctness of the information, technical inaccuracies may occur and periodic changes may be made without notice. Net Safety Monitoring Inc., assumes no responsibility for any errors contained within this manual.

If the products or procedures are used for purposes other than as described in the manual, without receiving prior confirmation of validity or suitability, Net Safety Monitoring Inc., does not guarantee the results and assumes no obligation or liability. No part of this manual may be copied, disseminated or distributed without the express written consent of Net Safety Monitoring Inc.

Net Safety Monitoring Inc., products are carefully designed and manufactured from high quality components and can be expected to provide many years of trouble free service. Each product is thoroughly tested, inspected and calibrated prior to shipment. Failures can occur which are beyond the control of the manufacturer. Failures can be minimized by adhering to the operating and maintenance instructions herein. Where the absolute greatest of reliability is required, redundancy should be designed into the system.

Warranty

Net Safety Monitoring Inc., warrants its APM Sensor against defective parts and workmanship for a period of 24 months from date of purchase; other electronic assemblies for 36 months from date of purchase. No other warranties or liability, expressed or implied, will be honoured by Net Safety Monitoring Inc. Contact Net Safety Monitoring Inc., or an authorized distributor for details.

We welcome your input at Net Safety Monitoring. If you have any comments please contact us at the phone/address below or visit our web site and complete our on-line customer survey: www.net-safety.com.

Contact Information

Net Safety Monitoring Inc.
2721 Hopewell Place NE
Calgary, AB
Canada
T1Y 7J7
Telephone: (403) 219-0688 Fax: (403) 219-0694
www.net-safety.com
E-mail: nsmsales@net-safety.com
Copyright © 2005 Net Safety Monitoring Inc.
Printed in Canada

Table of Contents

IMPORTANT INFORMATION 1

Warranty 1

Contact Information 1

INTRODUCTION 4

THE PRODUCT 4

THE MANUAL 4

STEP 1 — PLAN 5

Figure1: Locate APM Sensor and Controller – Typical Installation 5

LOCATE CONTROLLER / APM 5

Figure 2: Dimensional Drawing—Controller and 6

APM Sensor 6

Figure 3: Dimensional Drawing—APM Sensor and 6

Multi-purpose Junction Box 6

STEP 2 — INSTALL 7

UNPACK 7

Figure 4A: Components 7

THE CONTROLLER 7

THE APM SENSOR 7

Figure 4B: ATEX APM sensor 7

STEP 3 — WIRE 8

FIELD INSTALLATION 8

SEAL 8

MOUNT 8

Connecting Wires 8

Figure 5: Securing wires 8

Board Assembly 9

Figure 6: Millennium Module Boards 9

WIRING — APM SENSOR AND CONTROLLER 9

Figure 7: Wiring— APM Sensor and Controller 10

SENSOR AND CONTROLLER 10

Table 1: APM Sensor and Controller Terminal Connections 10

SENSOR SEPARATION 11

Figure 8: Wiring—APM Separation 11

CURRENT OUTPUT 12

Figure 9: Jumper Position 12

NON-ISOLATED AND ISOLATED POWER CONFIGURATIONS 12

Figure 10: Current Source and Sink Drawing. 12

STEP 4 — OPERATE 13

Figure 11: Controller Functionality 13

Table 2: Status LED's, Display Messages and Current Loop 14

SET-UP BUTTON 14

MAGNETIC REED SWITCH 14

THE MAIN MENU 14

Accessing the Main Menu 15
Main Menu Functionality 15
CURRENT LOOP MEASUREMENT (TEST JACKS) 15
POWER UP 15
STEP 5 — ZERO 15
STEP 6 — MONITOR 16
Table 3: Display Messages 16
SENSITIVITY SETTINGS 16
SET RELAY OPTIONS 17
APM FAULT 17
ALARMS 17
Clean Window/Dirty Chamber 17
Smoke Alarm 17
RESET 18
Remote Reset 18
Manual Reset 18
REVIEW RELAY SETTINGS 18
NORMAL 18
OUTPUTS 18
Relays 18
Current 18
STEP 7 — MAINTAIN 18
RESPONSE CHECK 18
TROUBLESHOOT 19
CLEANING 19
HOW TO RETURN EQUIPMENT 19
SPARE PARTS /ACCESSORIES 20
Table 4: Part Numbering 20
Addendum: Duct Monitoring 21
Appendix A: ELECTROSTATIC SENSITIVE DEVICE (ESD) 22
Appendix B: RESISTANCE (OHMS) 23
Appendix B: Resistance Table (cont'd) 24
Appendix C: SPECIFICATIONS 25

INTRODUCTION

THE PRODUCT

The APM is an infrared optical detector, used in hazardous industrial applications, to monitor ambient air for the presence of particulate matter from products of combustion such as carbon, smoke or ash. The Millennium Controller (Transmitter) is an environmentally protected electronic package contained within an explosion-proof housing. With its scrolling 8-character display and status LEDs it provides instructions and status alerts. The APM Sensor is mounted where airborne particles are anticipated to accumulate while the Millennium Controller is located conveniently at eye level. The product is available in Aluminum and Stainless Steel (SS).

There are two APM versions:

OP (Optical Protection) - This version is used when there is a reflective surface or objects moving through the path, within 1.5 meters of the sensor. The two types of APM sensors available with Optical Protection are the CSA certified and ATEX certified models.

NOP (No Optical Protection) - This version is used when there are no reflective surfaces or objects moving through the path, within 1.5 meters of the sensor. The NOP version is now obsolete.

Note: In order for the APM to detect particulate in the air, the particulate must reach the sensor. It will not detect particulate at a distance.

THE MANUAL

The manual has been designed to make installation of the Millennium product easy. To ensure proper installation, follow the simple steps outlined in the following pages. If you encounter problems during operation, consult the troubleshooting section or contact your sales representative.

Step 1 — PLAN
Step 2 — INSTALL
Step 3 — WIRE
Step 4 — OPERATE
Step 5 — ZERO
Step 6 — MONITOR
Step 7 — MAINTAIN

STEP 1 — PLAN

LOCATE CONTROLLER / APM

Prior to the installation process, a location plan for placing the APM Sensor and Controller should be developed. Proper location of the APM Sensor is essential for providing maximum protection. The most effective placement and number of detectors varies depending upon conditions. The following points should be considered when planning the installation.

- Carefully locate the APM Sensor in an area where particulate may potentially accumulate.
- The APM Sensor should be located where it is safe from potential sources of contamination. Such as oil film, dirt, etc.
- Locate the controller where it will be accessible and visible.
- Mount the APM Sensor so air currents allow particulate to flow into the sensor.
- If the particulate is expected to be moving horizontally due to air currents, orient the sensor for maximum detection.
- Exposure to excessive heat or vibration can cause premature failure of electronic devices and should be avoided whenever possible.
- Seek advice from experts and refer to various regulatory publications that discuss general guidelines for your industry.

Note: If used for the detection of smoke, refer to NFPA 72 guidelines (National Fire Protection Association @ www.nfpa.org)

The following illustrates a typical installation of an APM Sensor and Controller. The APM Sensor is mounted separate from the controller using a junction box. The controller is located at eye –level, while the sensor is located where particles are most likely to accumulate. Conduit then connects the two devices. See Figure 1. Also refer to "Wiring - APM Sensor and Controller".

Figure1: Locate APM Sensor and Controller – Typical Installation

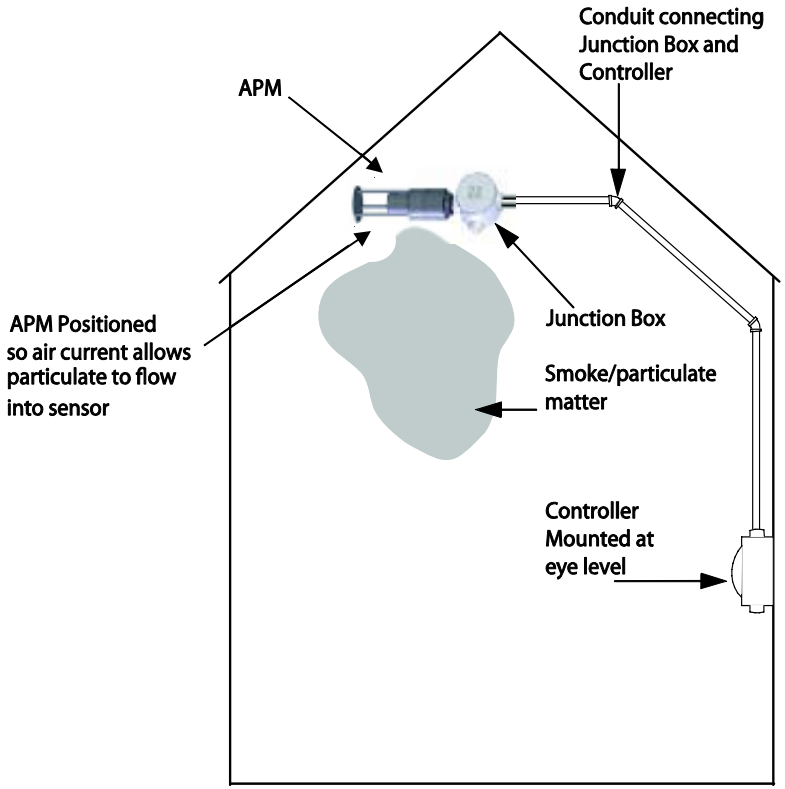

The APM is widely used in applications requiring reliable monitoring of ducts. Refer to "Addendum: Duct Monitoring" for information.

Figure 2: Dimensional Drawing—Controller and APM Sensor

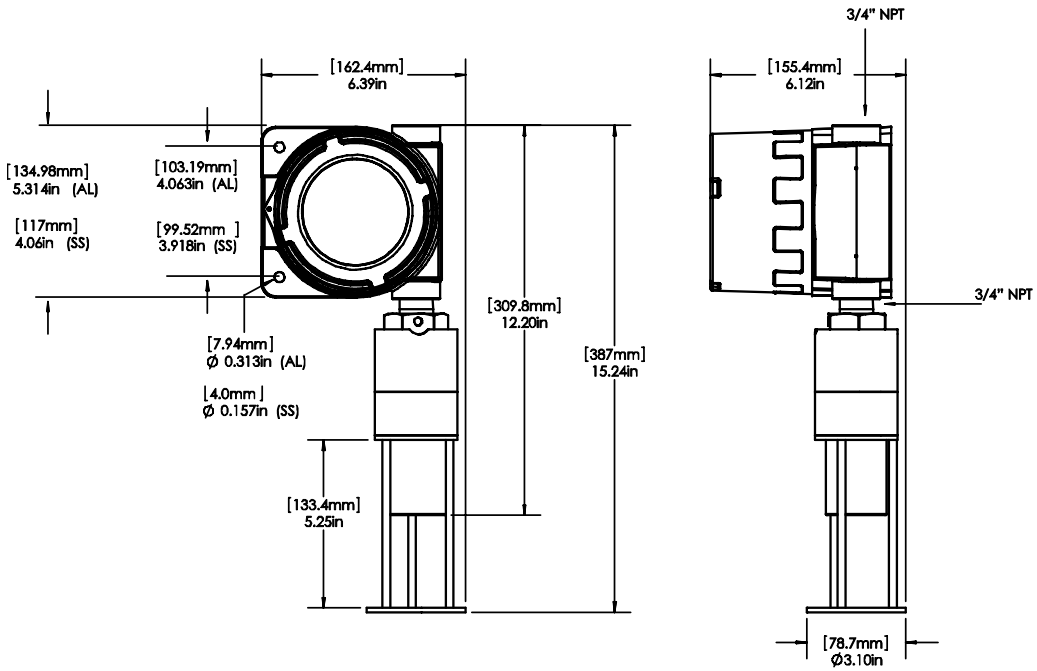

Figure 3: Dimensional Drawing—APM Sensor and Multi-purpose Junction Box

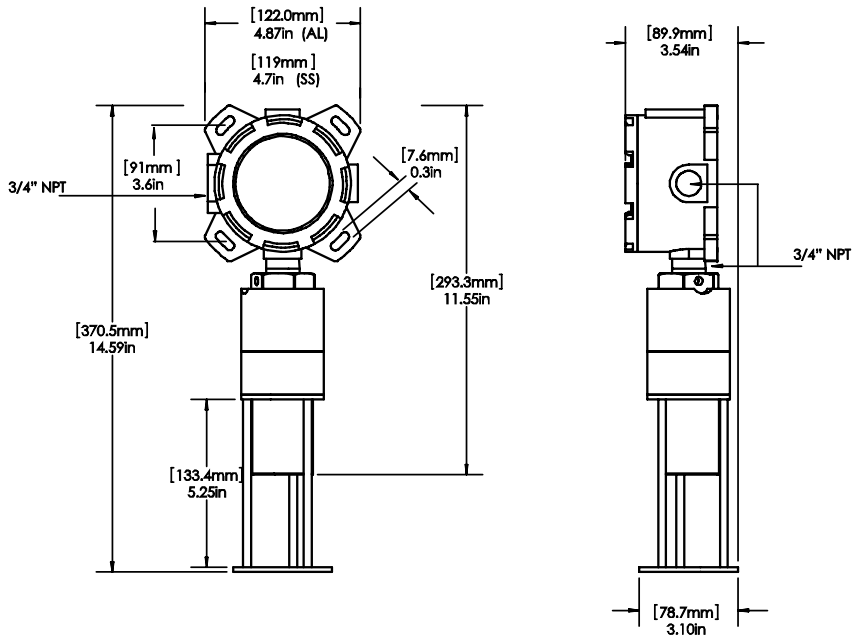

STEP 2 — INSTALL

UNPACK

Carefully remove all components from the packaging. Check components against the enclosed packing list and inspect all components for obvious damage such as broken or loose parts.

If you find any components missing or damaged, notify the distributor or Net Safety Monitoring immediately.

Figure 4A: Components

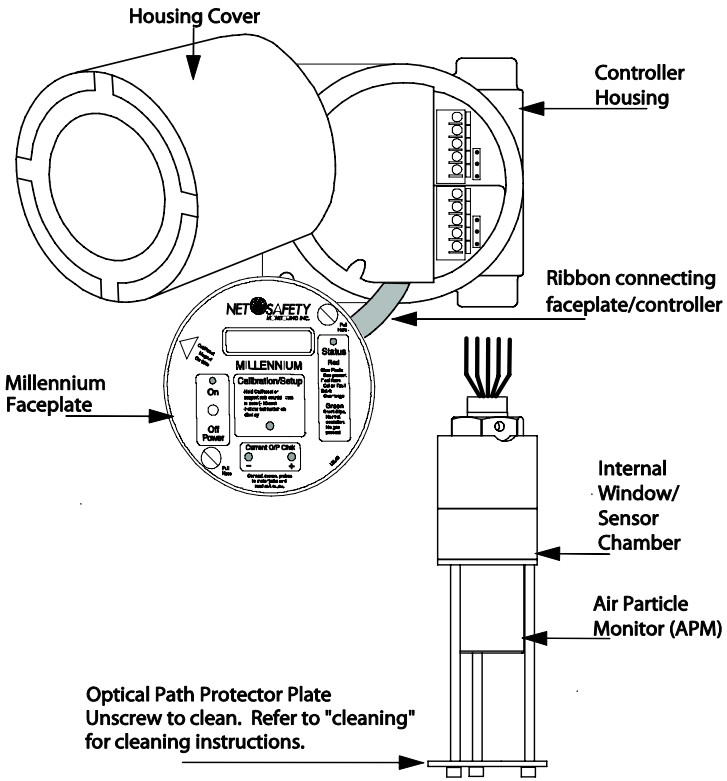

THE CONTROLLER

The Millennium Controller has an explosion-proof Housing, rated Class 1, Division 1, Groups B, C, and D for hazardous applications. To remove the Housing cover, simply screw the cover counter clockwise.

THE APM SENSOR

The APM Sensor monitors airborne products of combustion such as carbon, smoke or ash. The sensors available are the CSA certified and the ATEX certified sensors. See Appendix for approval.

The ATEX APM sensor is certified for hazardous locations and is in compliance with EN 60079-0 and 60079-1: 2009. ATEX Certificate # DNV 09 ATEX 66005X.

Special Conditions for Safe Use:

1) The permanently connected cable needs appropriate protection of the free end of the cable.
2) The parts of the bushing outside the flameproof enclosure shall be protected in accordance with one of the types of protection listed in EN60079-0.
3) The electrical earth bonding of the equipment shall be ensured during installation.

Figure 4B: ATEX APM sensor

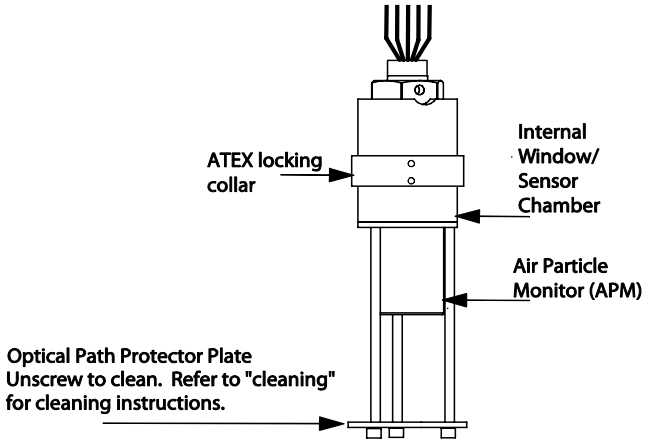

ATEX APM sensor

STEP 3 — WIRE

FIELD INSTALLATION

WARNING: Wiring codes and regulations may vary. Compliance with regulations is the responsibility of the installer. Wiring must comply with applicable regulations relating to the installation of electrical equipment in a hazardous area. If in doubt, consult a qualified official before wiring the system.

• If the 4-20 mA signal is not used, connect a jumper between the 4-20 terminal and the Common terminal.
• The use of shielded cable is highly recommended for signal, input, output and power wires to protect against interference caused by extraneous electrical or electromagnetic 'noise'.
• In applications where the wiring cable is installed in conduit, the conduit must not be used for wiring to other electrical equipment.
• The maximum distance between the APM Sensor and Controller is limited by the resistance of the connecting wiring, which is a function of the gauge of the wire being used.
• The controller contains semiconductor devices susceptible to damage by electrostatic discharge. Use caution when handling. For more information on proper ESD handling, refer to Appendix A, “Electrostatic Sensitive Device (ESD)”.

SEAL

The use of seals is recommended to further protect the system against any unwanted water ingression, and equipment should be installed according to applicable local electrical codes. Seals are especially recommended for installations that use high-pressure or steam cleaning devices in proximity to the transmitter and/or sensor.

• Water-proof and explosion-proof conduit seals are recommended to prevent water accumulation within the enclosure.
• Seals should be located as close to the device as possible and not more than18 inches (46 cm) away.
• Explosion-proof installations may require an additional seal where conduit enters a non-hazardous area. Ensure conformity with local wiring codes.
• When pouring a seal, use a fibre dam to assure proper formation of the seal. Seals should never be poured at temperatures below freezing.
• The jacket and shielding of the cable should be stripped back to permit the seal to form around the individual wires. This will prevent air, particles and water leakage through the inside of the shield and into the enclosure.
• It is recommended that explosion-proof drains and conduit breathers be used. In some applications, alternate changes in temperature and barometric pressure can cause 'breathing' which allows moist air to enter and circulate inside the conduit. Joints in the conduit system are seldom tight enough to prevent this 'breathing'.

MOUNT

The controller should be mounted at eye-level and be easily accessible for monitoring and maintenance purposes. The sensor should be placed where particles are likely to accumulate and with the Collector Cone (for NOP versions) pointed in the appropriate direction, or the Optical Path (OP version) across the direction of air flow. To prevent water damage, seal conduit at all points of entry to the controller or junction box.

Connecting Wires

1. Use a small screw driver to gently press down and hold the spring connector open.
2. Insert appropriate wire into open connector hole.
3. Release screw driver to secure wire.

Figure 5: Securing wires

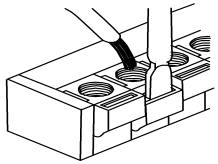

Board Assembly

There are three different fixed boards and two optional relay boards which makeup the PCB Assembly. Depending upon requirements, either an Electromechanical or Solid State Relay Board module can be used in the Millennium Controller. Simply loosen the three locking standoffs, remove one board, insert the other board and tighten screws. Boards are susceptible to ESD. Refer to Appendix A, “Electrostatic Sensitive Device (ESD)".

Figure 6: Millennium Module Boards

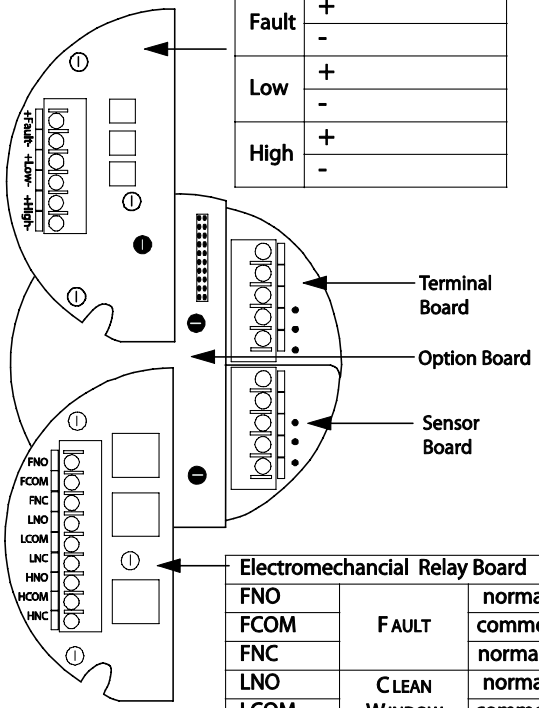

Solid State Relay Board	
Fault	+
	-
Low	+
	-
High	+
	-

Electromechancial Relay Board		
FNO	FAULT	normally open
FCOM		common
FNC		normally closed
LNO	CLEAN WINDOW (LOW)	normally open
LCOM		common
LNC		normally closed
HNO	SMOKE (HIGH)	normally open
HCOM		common
HNC		normally closed

WIRING — APM SENSOR AND CONTROLLER

WARNING: Power to the unit must be OFF before wiring.

As the APM Sensor must be located where particles are likely to accumulate and the controller where it can be easily reached, it is necessary to “separate” the controller and APM Sensor. This is done with the of the APM separation kit. See “Sensor Separation”.

Figure 7: Wiring— APM Sensor and Controller

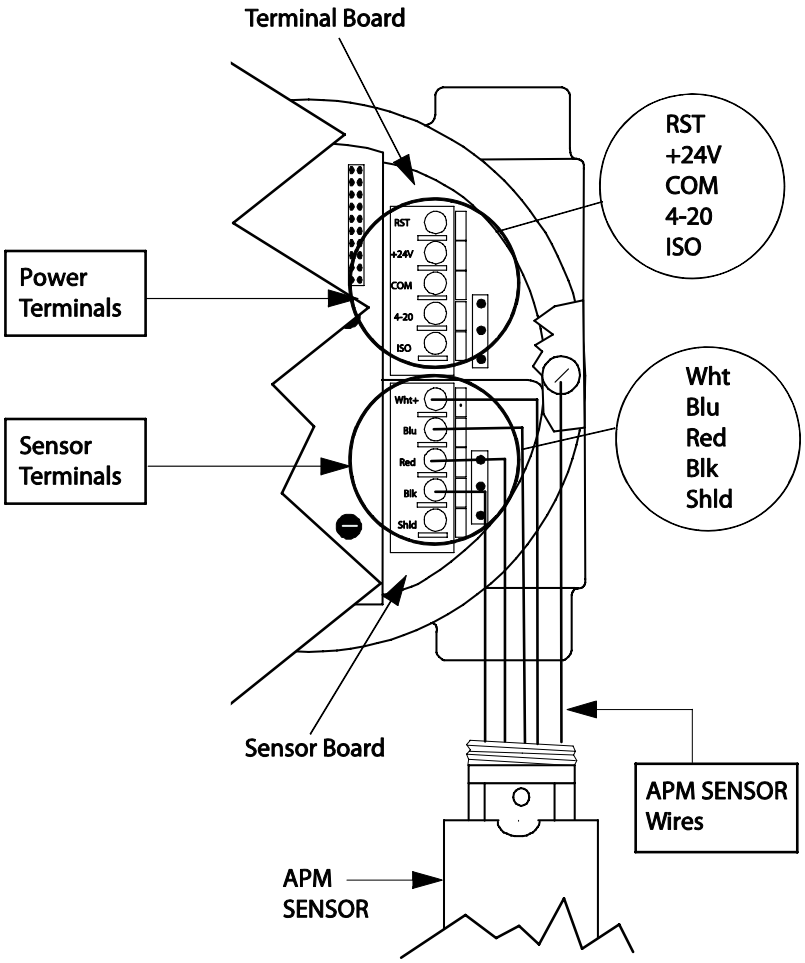

Note: If the 4-20 mA signal is not used, connect a jumper between the 4-20 terminal and the COM terminal on the terminal board.

SENSOR AND CONTROLLER

WARNING: Power to the unit must be OFF before wiring. Also ensure area is de-classified before removing housing cover.

Note: The APM Sensor may be factory fitted to the controller. If so, you need only connect the Power Terminals. Follow the steps below.

1. Remove the Controller's Housing Cover.
2. Connect the APM Sensor to the Sensor Terminals (if necessary).
3. Connect signal and power wires from power supply to Controller Power Terminals. See Table 1 below.

Table 1: APM Sensor and Controller Terminal Connections

APM Sensor Terminals			Controller Power Terminals	
Wires	**Terminal designations**		**Terminal designations**	**Power Connections**
White	+24VDC		RST	Remote Reset
Blue	SIG A		+24V	Power (+) (+24VDC)
Red	SIG B		COM	Power (-) (-24VDC)
Black	COM(-)		4-20	Current Loop Output (mA)
Shield	Shld		+VISO	+24VDC isolated 4-20 power

Note: For APM Separation instructions, see Figure 8, "Wiring— APM Separation.

4. Replace the Controller's Housing Cover.
5. Turn controller on.
6. Ensure display reads **Start Delay**, Status LED is Red Slow Flash and current output displays 3.0 mA. This is the start-up delay sequence which will last approximately 90 seconds.

SENSOR SEPARATION

Since the APM Sensor must be located where it will pick up particulate in an air flow, and the controller where it can be easily reached, it is often necessary to “separate” the controller and sensor. This is done with the aid of the sensor separation kit (SEP). This kit is composed of a junction box and terminal strip. See Option 1, Figure 1 and refer to the **Net Safety Multi-purpose Junction Box manual (MAN-0081) for terminal designation.**

Shielded copper instrument wire (minimum 18 AWG) should be used for separations up to 500 feet. Shielded copper instrument wire (minimum16 AWG) should be used for separations up to 2000 feet. Ensure that the appropriate wire is used for the Class 1/Division 1, hazardous applications. Consult the factory if a greater separation distance is required.

Note: When sensor is separated from controller, always ensure that the controller is supplying the required voltage to the sensor terminals inside the junction box. Refer to Table 1, "APM Sensor and Controller Terminal Connections". Also if the 4-20 mA signal is not used, connect a jumper between the 4-20 terminal and the COM terminal on the Terminal Board.

Figure 8: Wiring—APM Separation

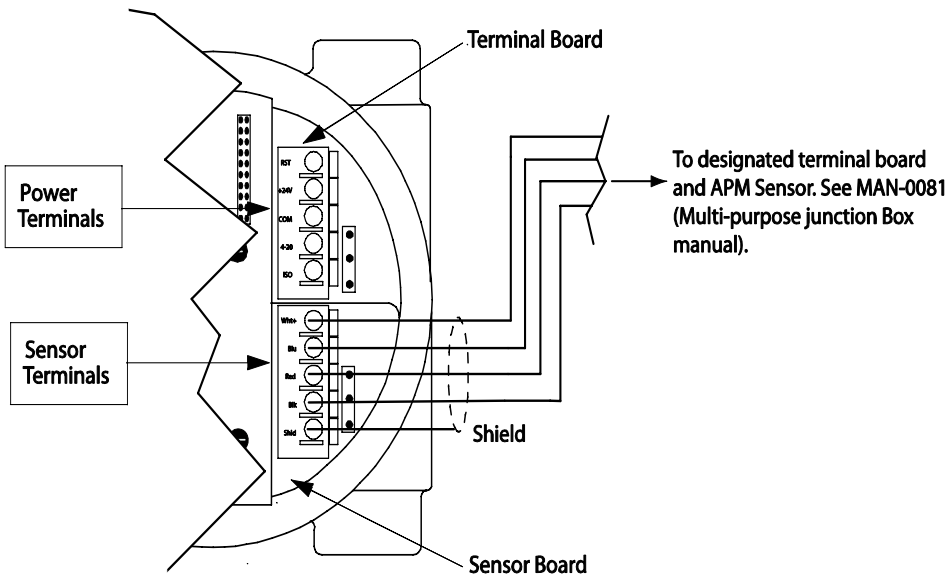

CURRENT OUTPUT

To set the current output, simply move the jumper located on the Terminal Board near the power terminals, to the isolated or non isolated current position. Refer to Figure 9.

Note: Unless otherwise specified, all models ship with this jumper in the non-isolated current position (Pin 2 and Pin 3 jumpered). Refer to Figure 9.

Figure 9: Jumper Position

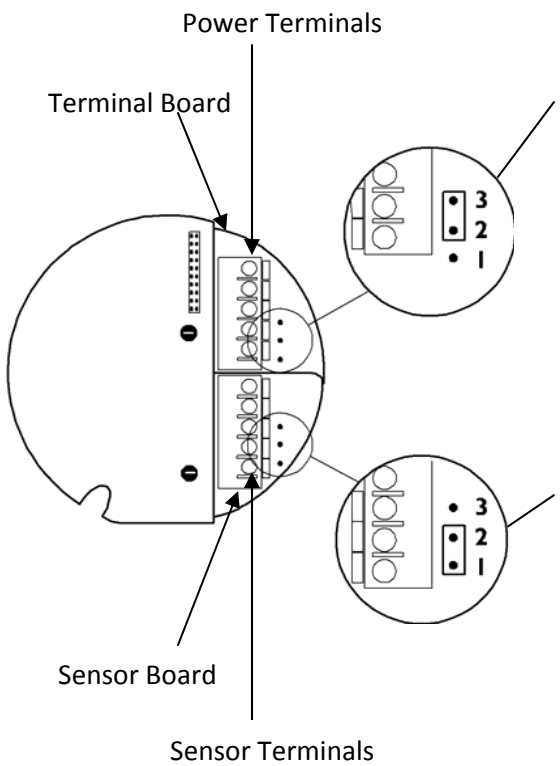

Jumper positions to set power source for current output.

Isolated & Non-Isolated Current Jumper - Place Jumper (shorting jack) over Pin 3 and Pin 2 (default position) for Non-Isolated configuration (source).

Place Jumper over Pin 1 and Pin 2 for remaining configurations. See Figure 10

Termination Jumper – The shorting jack must remain installed over Pins 1 & 2

NON-ISOLATED AND ISOLATED POWER CONFIGURATIONS

For current source using Non-Isolated configuration, the jumper must remain in the default position (Pin 2 and Pin 3 jumpered). The jumper is placed over Pin1 and Pin 2 for current sink using Non-Isolated configuration.

For Isolated configuration using a separate power supply to isolate the current loop, the jumper must be placed over Pin 1 and Pin 2 for source and sink. See Figure 9 and Figure 10.

Note the Jumper position for each configuration.

Figure 10: Current Source and Sink Drawing.

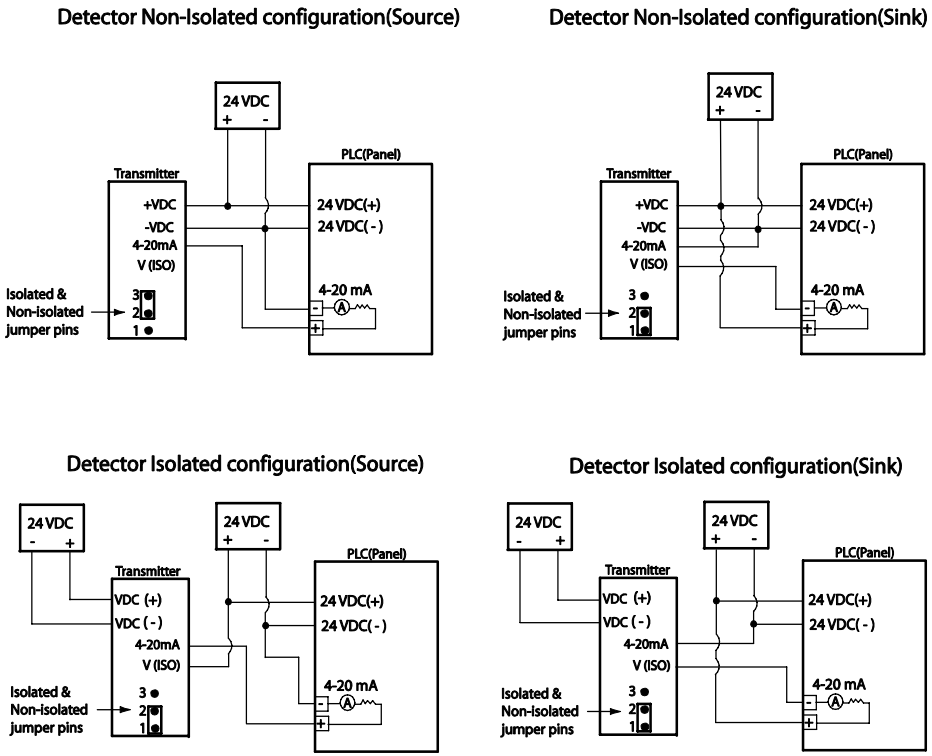

STEP 4 — OPERATE

Figure 11: Controller Functionality

Magnetic Reed Switch –provides non-intrusive access for programming, zeroing and resetting.

-Place magnet against housing as indicated for less than one second to initiate a basic system reset (clear latched alarm) and make selections. –Place magnet against housing as indicated and hold to program, view current settings and zero

ON/OFF Switch –used to turn controller on and off. Housing must be removed to access.

Pull Here knob

Scrolling 8 character display- provides various status messages and prompts. Refer to “Status LED’s, Display Messages and Current Loop”

Pull Here knob-unscrew the two screws and pull to remove faceplate. Removal allows access to terminal boards. The face plate remains attached to the ribbon cable

Status Light (flashes Red or Green) to indicate status of unit. Refer to “Status LEDs, Display Messages”, for detailed explanation.

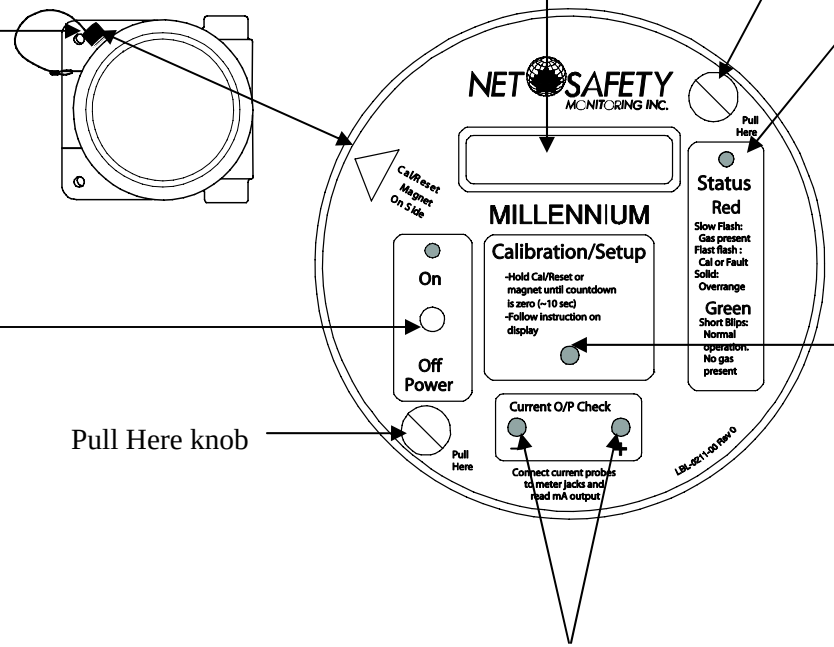

Setup Button –provides intrusive access for programming, zeroing and resetting. -Push for less than one second to initiate a basic system reset (clear a latched alarm) and make selection. -Push and hold to program, view current settings and zero.

Current Output Check –test jacks to facilitate current loop measurements without breaking external current loop. To take current loop measurements, ensure wiring is correct and current loop is closed, and then follow steps below

-Set meter on mA scale and insert meter leads into test jacks.

-Put external devices in bypass, if necessary, to avoid unwanted alarm response.

-Perform simulated tests to check output.

-Remove meter leads from test jacks and return external devices to normal.

Table 2: Status LED's, Display Messages and Current Loop

State	Current O/P	Status LED Red or Green	Display
Main Menu Options (setting 'zero' through to setting 'Display Language'	3.0 mA	Solid Green	Set Zero, Set Sensitivity, Review Relay Settings, Set Relay options, Set display Language
Normal Operation	4.0 mA	Green Blip	Clear
Start–up Delay (90 seconds)	3.0 mA	Slow Red flash	Start Delay
Sensor chamber is dirty ('Clean Window Alarm')	3.3 mA	Fast Red flash	Dirty Chamber
Particulate present ('Smoke Alarm')	20 mA	Red Blip	Smoke
Fault Condition	2.5 mA	Fast Red flash	Fault

SET-UP BUTTON

The Setup Button provides access to the Millennium's Main Menu, which in turn allows options to be reviewed and set. The Setup Button is also used to zero the controller. Since the controller's housing must be opened to access the button the area must be de-classified before using.
Press and hold the Setup button to zero and access Main menu.
Briefly press to make a selection (select YES?).

MAGNETIC REED SWITCH

The Magnetic Reed Switch is provided to avoid opening the Housing in an environment where gas may be present. The Magnetic Reed Switch functions in the same manner as the Setup Button but in a non-intrusive manner. It is attached to the side of the controller.

When using magnet:
• Place and hold the magnet to the Controller's Housing (10 o'clock position) to zero and access Main Menu.
• Briefly place the magnet to the Controller's Housing (10 o'clock position) to make a selection (select **YES?)**.

WARNING: Opening the Controller's Housing should be avoided if gases may be present (hazardous environment). Do not power up the system, with the housing cover removed, unless the area has been de-classified.

THE MAIN MENU

The controller must be powered up before the Main Menu is displayed. See "Power Up".
The Main Menu provides access to various functional settings and viewing of current settings. The following are the available options/settings:
• Set Zero - The unit adjusts to current environment.
• Sensitivity Settings - Set to low, medium or high sensitivity levels.
• Review Relay Settings - Review the current Fault, Clean Window and Smoke Alarm settings.
• Set Relay Options - Select the settings for the Clean Window and Smoke Alarms. The Fault Alarm setting is fixed.
• Select Display Language – Allows user to choose English, French or Spanish.

Accessing the Main Menu

The following are two ways to access the Main Menu:
• Setup Button found on the faceplate (the housing cover must be removed to access)
• Magnetic Reed Switch (a magnet must be used to activate)

Main Menu Functionality

1. Ensure that the controller has been turned on and no fault is present.
2. Hold the magnet against the Reed Switch or press and hold the Setup Button until the message **Switch On** displays and the countdown (10 to 0) finishes.
3. An option will scroll across the display followed by the prompt **YES?**.
4. To set/view an option, momentarily place the magnet to the Reed Switch or press the Setup Button at the **YES?** prompt.
5. If you do not wish to select that option wait until the next option appears and then select **YES?** .
6. A selection is acknowledged with a flashing **YES**.
7. If no option is selected, the controller returns to **Clear** (normal operation).

CURRENT LOOP MEASUREMENT (TEST JACKS)

Use a standard meter to measure current loop during various states. The Controller's Housing cover must be removed to access the Test Jacks. Ensure area is de-classified prior to removing housing cover.

POWER UP

When power is first applied, a 90 second warm-up routine will begin. During this time, the message **'Start Delay Millennium Net Safety'** will display, the Status LED will flash slow Red and the current output will be 3.0 mA.

After the warm-up, the controller will enter normal operation; the message **Clear** displays, the Status LED will blip/blink Green and current output will be 4.0 mA.

STEP 5 — ZERO

Note: It takes less than 1 minute to complete the Zero procedure.

If at any time the background particulate levels change, the controller may be zeroed to the new levels. Zeroing is recommended every 3 months.

After initial power-up, allow the unit to warm up for 2-4 hours before zeroing.

Be sure the APM is powered-up and is not indicating a fault; display reads Clear and Status LED Blip/blink Green and current output is 4.0 mA.

1. Ensure that the sensor is in a normal air environment before beginning the procedure; surrounding air is clean and free of particulate or at the accepted background level for the specific application.
2. Press and hold the Setup Button or the magnet to the Reed Switch to enter the Main Menu; wait for the countdown, from 10 to 0, to end.
3. Release the Setup Button or remove the magnet from the Reed Switch.
4. When **Set Zero YES?** displays press the Setup Button or use the Reed Switch to select.
The flashing **YES** confirms the selection.
5. The APM has now been zeroed. This means that the existing level of air contamination is considered normal.

STEP 6 — MONITOR

Table 3: Display Messages

Message	Meaning and / Action
Start Delay Millennium Net Safety	Power up sequence in progress
Switch On	Setup Button or reed Switch active
Fault	Fault Alarm tripped-sensor or sensor wiring fault
Smoke	Smoke Alarm-Smoke/Particulate detected
Dirty Chamber	Chamber is dirty. Clean window and chamber
Clear	No particulate present and no fault detected. No action required
Set Zero YES?	Set Zero Level of controller
Set Relay Option YES?	Set Clean Window Alarm or Smoke Alarm
Review Relay Settings YES?	Review current functional settings
Sensitivity Settings YES?	Set for high, medium or low sensitivity
Coil Status Energized/De-Energized	Fixed for Fault Alarm Relay. Set Clean Window or set Smoke Alarm coil status
Latch Status Latching/ Non-Latching	Fixed for Fault Alarm Relay. Set Clean Window or Smoke Alarm condition

Note: By default, the Fault Alarm Relay is fixed as Energized and Non-latching and cannot be changed.

SENSITIVITY SETTINGS

The APM can be set to detect low, medium or high sensitivity levels with high being the most sensitive. By default the sensitivity is set for High Sensitivity at the factory. Follow the steps below when changing sensitivity.

1. Press and hold the Setup Button or the magnet to the Reed Switch to enter the Main Menu; wait for the countdown, from 10 to 0, to end.
2. When **Sensitivity Settings YES?** displays press the Setup Button or use the Reed Switch to select. The flashing **YES** confirms the selection.
3. The following three options will display: Low Sensitivity YES? , Medium Sensitivity YES? and High Sensitivity YES?

When the required setting is displayed, press the Setup Button or use the Reed Switch to select. The selection is acknowledged with flashing **YES**.

Note: Put external warning system in by pass to prevent unwanted activation of alarms.

SET RELAY OPTIONS

Define relay settings for Clean Window and Smoke alarm conditions. Fault Alarm Relay is fixed as energized/non-latching and cannot be changed.

1. Press and hold the Setup Button or the magnet to the Reed Switch to enter the Main Menu; wait for the countdown, from 10 to 0, to end. The current output drops to 3.0 mA.
2. When **Set Relay Options YES?** displays press the Setup Button or use the Reed Switch to select. The flashing **YES** confirms the selection.
3. The message **Set Clean Window Alarm YES?** then displays. Press the Setup Button or use the Reed Switch to select. The flashing **YES** confirms the selection. The microprocessor begins the relay setting procedure.
4. After Clean Window Alarm option is chosen the message **Coil Status** displays and then shows **Energized YES?**.
5. Press the Setup Button or use the Reed Switch to select or wait for next selection option. If selected, a flashing **YES** confirms the selection.
6. The display now shows **De-Energized YES?**
7. Press the Setup Button or use the Reed Switch to select. The selection is acknowledged with a flashing **YES**.

Latching condition can now be set for the Clean Window Alarm.

8. The message **Latch Status** displays and then shows **Latching YES?**.
9. Press the Setup Button or use the Reed Switch to select or wait for the next selection option. If selected, a flashing **YES** confirms the selection.
10. The display now shows **Non-Latching YES?**.
11. Press the Setup Button or use the Reed Switch to select. The selection is acknowledged with a flashing **YES**.
12. Repeat Steps 3 through 10 to set the Coil and Latch Status for the Smoke Alarm.

APM FAULT

To ensure proper response, the Millennium features self-testing circuitry that continuously checks for problems. When power is applied, the system automatically begins a test to ensure proper functionality.
During normal operation, it continuously monitors the signal from the internal APM source. In addition, a "watchdog" timer is maintained to ensure the program is running correctly.

Note: The fault detection circuitry does not monitor any external response equipment. It is important that these devices be checked periodically to ensure they are operational.

ALARMS

Clean Window/Dirty Chamber

Over an extended period, oily film or particulate build-up may obscure the Infrared (IR) Smoke Detector. When dirty, the Clean Window alarm will trip, the message **Dirty Chamber** displays, the Status LED will flash fast Red and the current output will be 3.3 mA. Refer to "Sensitivity Settings" to define the clean window sensitivity and "Cleaning" for instructions on cleaning.

Smoke Alarm

With particulate is present in the APM's chamber, the message **Smoke** displays, the Status LED will Blip Red and the current output will be 20.0 mA. If the relay has been set to **Non-Latching**, the unit will reset itself; if set to **Latching,** a Manual or Remote Reset is required to clear the alarm condition. See "Reset".

RESET

Remote Reset

The Millennium is capable of remote reset. A normally open Push Button Switch must be connected between the RST terminal and the COM terminal on the terminal board. If relay is set to **Latching**, a Remote Reset is possible.

Manual Reset

If a relay is set to **Latching**, a Manual Reset is required to clear the alarm condition. Simply place and hold the Magnet against the Reed Switch or press and hold the Setup Button for 3-5 seconds. The unit will return to the normal operation.

REVIEW RELAY SETTINGS

This is a **read-only mode**; changes cannot be made.

1. Press and hold the Setup Button or the magnet to the Reed Switch to enter the Main Menu; wait for the countdown, from 10 to 0, to end. The output current drops to 3.0 mA.
2. When **Review Relay Settings** displays press the Setup Button or use the Reed Switch to select. The flashing **YES** confirms the selection and the settings are displayed.
3. Fault alarm settings **-fixed** as normally **"Energized"** and **"Non-Latching"**. Clean Window and Smoke Alarm settings are displayed in sequence.
4. After which, the option to **Set Relay Options YES?** is given.

NORMAL

With no particles present and no fault detected, the display reads **Clear**, Status LED will Blip/blink Green and the current output is 4.0 mA.

OUTPUTS

Relays

All relay outputs have Form C SPDT contacts rated 5 amperes at 30 VDC/250 Vac. Relays are dry contacts.

Current

A 4-20 mA dc current output is used to transmit the alarm status and fault codes to other devices. This output can be wired for isolated or non-isolated operation. A 4.0 mA output indicates normal operation; a 20.0 mA output indicates that the smoke alarm threshold has been exceeded. Current output of 2.5 mA indicates the presence of a system fault. Current output of 3.3 mA indicates a build-up of particulate in the sensor's chamber or dirty window.

STEP 7 — MAINTAIN

RESPONSE CHECK

It is recommended that the APM be checked and tested at least once every 3 months.

1. Spray Smoke Detector Tester™ (or equivalent product) in the direction of the sensor from a distance of two feet. Typically, a one to two second burst is adequate to initiate an alarm level.
2. The display should read **Smoke,** Status LED Blip Red and the current output 20.0 mA to indicate detection of smoke or canned contaminant.
3. After simulation, reset the alarms if latched and zero the APM in clear air free of particulates or at the accepted particulate background level for the specific application.

Note: The overuse of artificial smoke or spraying from too close range may impair the operation of the APM due to the accumulation of an oily film on the internal window.

TROUBLESHOOT

The Millennium Transmitter and APM Sensor are not designed to be repaired in the field. If a problem should develop carefully check for faulty wiring. If it is determined that the problem is caused by an electronic defect, the device must be returned to the factory for repair (refer to "How to Return Equipment" for instructions).

Regular checks should be done on the unit around every 2-3 months to ensure desired operation. Refer to "Response Check" for instructions.

CLEANING

The APM Sensor should be routinely cleaned. The frequency of cleaning will depend on the application and environment.

When the **Dirty Chamber** or **Smoke** message is displayed, the lens / window and chamber may require cleaning. Follow the steps below when cleaning.

1. Turn of power to the unit.
2. Unscrew bolts at the end of circular plate and connecting rods (OP version) or unscrew top section of housing (NOP version)
3. Using the included window cleaning kit (HDW-0061), clean the inner sides of the sensor's chamber and front side of the lens / window.
4. Ensure that there is no residue left on the lens / window.
5. Put the circular plate into position and screw in bolts at the end of the connecting rods (OP version) or fit and screw top half of housing.
6. Return power to the APM and check for normal operation.
7. Complete the Zero procedure to establish new settings.
8. If problems develop and persist, contact Net Safety Service department or refer to "How to Return Equipment".

HOW TO RETURN EQUIPMENT

A Material Return Authorization number is required in order to return equipment. Please contact Net Safety Monitoring at **(403) 219-0688** before returning equipment or consult our Service Department to possibly avoid returning equipment.

If you are required to return equipment, include the following information:
1. A Material Return Authorization number provided over the phone to you by Net Safety.
2. A detailed description of the problem. The more specific you are regarding the problem, the quicker our Service department can determine and resolve the problem.
3. A company name, contact name and telephone number.
4. A Purchase Order, from your company, authorizing repairs or request for quote.
5. Ship all equipment, prepaid to: **Net Safety Monitoring Inc**
2721 Hopewell Place NE
Calgary, Alberta, Canada
T1Y 7J7

6. Mark all packages: **RETURN for REPAIR**

Waybills, for shipments from outside Canada, must state:
Equipment being returned for repair
All charges to be billed to the sender
Also, please ensure a duplicate copy of the packing slip is enclosed inside the box indicating item 1-4 along with the courier and account number for returning the goods.

All Equipment must be Shipped prepaid. Collect shipments will not be accepted.

Pack items to protect them from damage and use anti-static bags or Aluminum-backed cardboard as protection from electrostatic discharge.

SPARE PARTS /ACCESSORIES

Table 4: Part Numbering

Description	Net Safety Part Number
Magnet Assembly	Magnet-1
Window Cleaning Kit	HDW-0061
APM with Optical Protection	MLP-AR-APM-OP-SEP
Terminal Board for JB-MPNS-A/S	PCBA-0252B
316 SS Termination JBox (no switch)	JB-MPNS-S
Aluminum Termination JBox (no switch)	JB-MPNS-A
Mech. Relay Board c/w Option Board	ML7-ORL305
Option Board (mates with Relay Board)	ML7-OP100
Mech. Relay Board	ML7-RL305
APM Sensor Assembly	APM-OP-ASSY
Transmitter for MLP-APM	ML7-TX600

Addendum: Duct Monitoring

The Net Safety Air Particle Monitor (Infrared Smoke Detector) is able to detect and monitor smoke and particulate moving at velocities up to 20 meters per second. This fact is as a result of its open path design and the use of Infrared Technology on which it is built.

Duct Mount Applications

The APM is widely used in application requiring reliable monitoring of ducts. In such applications it is used along with Net Safety Universal Duct Mounts to detect and monitor smoke and particulate present in ducts. The APM Sensor should be placed at a distance of around five duct widths downstream from duct openings, sharp bends, branch connections or deflection plates. Always 'zero' the APM Sensor in clean ambient air prior to operating. Adjust the sensitivity setting based on the type of application and response desired.

Duct Mount Description

Net Safety recommends that the APM be used with the UDM-001 or UDM-002 Duct Mounts. These Duct Mounts are made with a square enclosure (chamber) which is fitted with a perforated sample draw tube (inlet pipe) and an outlet pipe. The perforated sample draw tube allows a cross sectional sample of air and /or smoke moving through a duct to be acquired and effectively monitored. The length of the sample draw tube (inlet pipe) is based on the width of the duct. The inlet pipe may be cut to the desired length on the job site prior to mounting and installation. The length of the outlet pipe is standard for all applications. See UDM-001/002 Instruction guide (MAN-0116) for more information.

Duct Mount Air Sample Flow Principle

With the perforated sample draw tube facing the air sample flow (air stream), the sample is drawn by differential pressure into a smoke chamber (Duct Mount enclosure) where the APM is mounted. The outlet pipe then returns the sampled air/smoke to the duct. The differential pressure should be 0.025 to 2.0 inches of water as measured by a manometer.

Air Flow Drawing

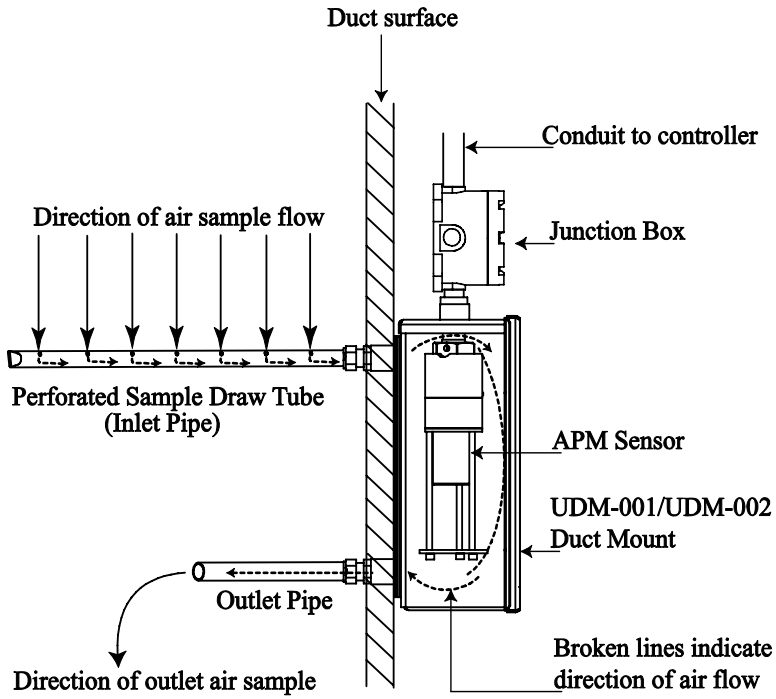

Maintenance

The APM Sensor should be routinely checked for dust and particulate accumulation. It should be cleaned routinely. See 'Cleaning'. Net Safety recommends that zeroing of the APM Sensor be done every 3 months.

The UDM-001 or UDM-002 Duct Mount enclosure and pipes should also be routinely checked and cleaned as required. The frequency of which depends on the application.

Appendix A: ELECTROSTATIC SENSITIVE DEVICE (ESD)

Electrostatic discharge (ESD) is the transfer, between bodies, of an electrostatic charge caused by direct contact or induced by an electrostatic field. The most common cause of ESD is physical contact. Touching an object can cause a discharge of electrostatic energy—ESD! If the charge is sufficient and occurs near electronic components, it can damage or destroy those components. In some cases, damage is instantaneous and an immediate malfunction occurs. However, symptoms are not always immediate —performance may be marginal or seemingly normal for an indefinite period of time, followed by a sudden failure.

To eliminate potential ESD damage, review the following guidelines:

• Handle boards by metal shields—taking care not to touch electronic components.

• Wear grounded wrist or foot straps, or ESD shoes or heel grounders to dissipate unwanted static energy.
• Prior to handling boards, dispel any charge in your body or equipment.
• Ensure components are transported and stored in static safe packaging.
• When returning boards, carefully package in the original carton and static protective wrapping.
• Ensure ALL personnel are educated and trained in ESD Control Procedures.
In general, exercise accepted and proven precautions normally observed when handling electrostatic sensitive devices.

A warning label is placed on the packaging, identifying product using electrostatic sensitive semiconductor devices.

Appendix B: RESISTANCE (OHMS)

Distance (Feet)	AWG #20	AWG #18	AWG #16	AWG #14	AWG #12	AWG #10	AWG #8
100	1.02	0.64	0.40	0.25	0.16	0.10	0.06
200	2.03	1.28	0.80	0.51	0.32	0.20	0.13
300	3.05	1.92	1.20	0.76	0.48	0.30	0.19
400	4.06	2.55	1.61	1.01	0.64	0.40	0.25
500	5.08	3.20	2.01	1.26	0.79	0.50	0.31
600	6.09	3.83	2.41	1.52	0.95	0.60	0.38
700	7.11	4.47	2.81	1.77	1.11	0.70	0.44
800	8.12	5.11	3.21	2.02	1.27	0.80	0.50
900	9.14	5.75	3.61	2.27	1.43	0.90	0.57
1000	10.20	6.39	4.02	2.53	1.59	1.09	0.63
1250	12.70	7.99	5.03	3.16	1.99	1.25	0.79
1500	15.20	9.58	6.02	3.79	2.38	1.50	0.94
1750	17.80	11.20	7.03	4.42	2.78	1.75	1.10
2000	20.30	12.80	8.03	5.05	3.18	2.00	1.26
2250	22.80	14.40	9.03	5.68	3.57	2.25	1.41
2500	25.40	16.00	10.00	6.31	3.97	2.50	1.57
3000	30.50	19.20	12.00	7.58	4.76	3.00	1.88
3500	35.50	22.40	14.10	8.84	5.56	3.50	2.21
4000	40.60	25.50	16.10	10.00	6.35	4.00	2.51
4500	45.70	28.70	18.10	11.40	7.15	4.50	2.82
5000	50.10	32.00	20.10	12.60	7.94	5.00	3.14

Appendix B: Resistance Table (cont'd)

Distance (Feet)	AWG #20	AWG #18	AWG #16	AWG #14	AWG #12	AWG #10	AWG #8
5500	55.80	35.10	22.10	13.91	8.73	5.50	3.46
6000	61.00	38.30	24.10	15.20	9.53	6.00	3.77
6500	66.00	41.50	26.10	16.40	10.30	6.50	4.08
7000	71.10	44.70	28.10	17.70	11.10	7.00	4.40
7500	76.10	47.90	30.10	19.00	12.00	7.49	4.71
8000	81.20	51.10	23.10	20.20	12.70	7.99	5.03
9000	91.40	57.50	36.10	22.70	14.30	8.99	5.65
10000	102.00	63.90	40.20	25.30	15.90	9.99	6.28

Note: Resistance is one way. This figure should be doubled when determining closed loop.

Appendix C: SPECIFICATIONS

APM Sensor SPECIFICATIONS

Certified Temperature Range	-40°c to 75°C (-40F to +167F)
Power Consumption	2.5W
Weight	Aluminum: 0.9 kg (2.0 lbs) / 316 SS: 1.4 kg (3.0 lbs)
Enclosure Material	Aluminum / 316 SS
Certifications	CSA and NRTL/C certified for hazardous locations Class 1, Division 1 Groups B, C and D, temperature code T5. IEC Rating Ex d IIB+H2 T5, NEMA 4X ATEX model: DNV ATEX: CE 0575 Ex II 2 G Ex d IIB + H2 T5 (-40°C < Ta < +75°C) DNV 09 ATEX 66005X

Controller (Transmitter) SPECIFICATIONS

Model	Millennium Premium Relay
Operating Temperature Range	-40°c to 85°C (-40F to +185F)
Power Consumption @ 12 VDC	Maximum 3.24W (with APM Sensor)
Power Consumption @ 24 VDC	Maximum 3.6W (with APM Sensor)
Humidity Range	0 to 100% Relative humidity, non-condensing
Operating voltage Range	10.5 to 32 VDC when measure at the controller/transmitter
Enclosure Material	Copper free Cast Aluminum / 316 SS
Weight (with APM Sensor)	Aluminum: 1.8 kg (4.0 lbs) / 316 SS : 4.2 kg (9.5 lbs)
Current Output	4-20 mA – into a maximum loop impedance of 800 Ohms at 32 VDC or 150 Ohms at 10.5 VDC Isolated or Non-Isolated loop supply.
Intrusive/Non intrusive Calibration	Yes
Certifications	CSA and NRTL/C certified for hazardous locations Class 1, Division 1 Groups B, C and D T4A, Type 4X. IEC Rating Ex d IIB T4, maximum 85°C.
	Electronics only – CSA and NRTL/C certified for hazardous locations Class 1, Division 2 Groups A, B, C and D.

Net Safety Monitoring Inc.
2721 Hopewell Place NE, Calgary, AB Canada T1Y 7J7
1-866-FIREGAS (347-3427) | ph. (403) 219-0688 | fx. (403) 219-0694
http://www.net-safety.com | Email: nsmsales@net-safety.com

PRODUCT SERVICES CONTACT INFORMATION
Telephone [8am - 5pm MDT]: (403) 769-6074 | (403) 717-8219
Fax: (403) 219-0694 Email: productservices@net-safety.com
http://www.net-safety.com/service/product_services.html

NET SAFETY MONITORING INC.

GRAINGER
FOR THE ONES WHO GET IT DONE

110 candela horn strobe wall mount

110 candela horn strobe wall mount

Grainger Item #	5KDG0
Brand	EDWARDS SIGNALING
Mfr. Model #	2452THS-110-R
Ship Qty.	1
Sell Qty. (Will-Call)	1
Ship Weight (lbs.)	1.06
Usually Ships	Today
Catalog Page No.	2720

Price shown may not reflect your price. Log in or register.

Additional Info

Fire Alarm Outputting Devices

Input device activates audible and visual signals. Each signal is hardwired from a control panel (sold separately).

UL and C-UL Listed, CSFM Approved.

- Indoor use only

Audible and Visual Signals

For applications with low ambient noise levels, except Nos. 5KDF9 and 5KDG0 are for moderate ambient noise levels.

- Nos. 5KDF9 and 5KDG0 are suitable for outdoor use when used with Weatherpoof Back Box, No. 5KDG1

Tech Specs

Item: Horn Strobe
Finish: Red
Alarm Current: 0.369
Peak Output (dBA): 85
Flash (Candela): 110
Depth (In.): 2
Height (In.): 5-1/2
Width (In.): 5-1/2
Voltage: 24 Vdc
Standards: UL 1971 UL 1638
Package Quantity: 1

Optional Accessories

There are currently no optional accessories for this item.

Alternate Products

There are currently no alternate products for this item.

Repair Parts

A Repair Part may be available for this item. Visit our Repair Parts Center or contact your local branch for more information.

GRAINGER
FOR THE ONES WHO GET IT DONE

weatherproof box- red

weatherproof box- red

Grainger Item #	5KDG1
Brand	EDWARDS SIGNALING
Mfr. Model #	2459-WPB-R
Ship Qty.	1
Sell Qty. (Will-Call)	1
Ship Weight (lbs.)	2.18
Usually Ships	Today
Catalog Page No.	2720

Price shown may not reflect your price. Log in or register.

Additional Info

Fire Alarm Outputting Devices

Input device activates audible and visual signals. Each signal is hardwired from a control panel (sold separately).
UL and C-UL Listed, CSFM Approved.

- Indoor use only

Audible and Visual Signals

For applications with low ambient noise levels, except Nos. 5KDF9 and 5KDG0 are for moderate ambient noise levels.

- Nos. 5KDF9 and 5KDG0 are suitable for outdoor use when used with Weatherpoof Back Box, No. 5KDG1

Tech Specs

Item: Weatherproof Back Box
Finish: Red
For Use With: 5KDG0 Horn Strobe
Package Quantity: 1

GRAINGER
FOR THE ONES WHO GET IT DONE

Hazardous Warning Light, Strobe, Red, 120V

Strobe Light, Color Red, Type Hazardous Location, Voltage @ 60Hz 120VAC, Current Rating 0.25 Amps, Diameter 5 1/2 Inches, Height 7 1/2 Inches, Flashes per Minute 80, Lamp Life 10, 000 Hours, Mounting 1/2 Inch Pipe, Approval/Listing UL Indoor and Outdoor, CSA Certified, NEMA Rating 4X

Grainger Item #	1N900
Brand	FEDERAL SIGNAL
Mfr. Model #	225XST-120R
Ship Qty.	1
Sell Qty. (Will-Call)	1
Ship Weight (lbs.)	2.5
Usually Ships	Today
Catalog Page No.	2603

Price shown may not reflect your price. Log in or register.

Additional Info

Explosionproof and Hazardous Location Visual Signaling Devices

UL and C-UL Listed.

- NEMA 4X Rated

Strobe Lights

- Lamp life: 10,000 hrs.

(C) Hazardous Location - Polycarbonate Dome

60 FPM. NEC Class I, Div. 2, Groups A, B, C, and D; Class II, Div. 2, Groups F and G; Class III.

Tech Specs

Item: Hazardous Location Warning Light
Color: Red
Lamp Type: Strobe Tube
Flashes per Minute: 80
Light Output: 240 Candela
Lamp Life: 5000 hr.
Lens Design: Fresnel
Lens Material: Polycarbonate
Housing Material: Polycarbonate
Mounting: (F) 1/2" NPT
Operating Temp.: -40 Degrees F to 104 Degrees F
Rating: IP66, NEMA 4X
Power Source: 120VAC
Current Drawn: 0.25A AC
Height: 7-1/2"
Diameter: 5-1/2"
Standards: UL
Includes: Dome Guard

Repair Parts

Repair Parts Information is available for this item.

Notes & Restrictions

Note: FPM: Flashes per minute.

GRAINGER
FOR THE ONES WHO GET IT DONE

Signal Device, Horn

Horn Signal Device, Hazardous Location, Color Black, Voltage 120VAC, Current Rating 0.18 Amp, Height 4 1/2 Inches, Depth 3 5/8 Inches, Width 6 Inches, Type 4X Enclosure, Effective Range 200 Feet, Die-cast Zinc Housing, Polyurethane Finish

Grainger Item #	3WU54
Brand	FEDERAL SIGNAL
Mfr. Model #	350WBX-120
Ship Qty.	1
Sell Qty. (Will-Call)	1
Ship Weight (lbs.)	3.5
Usually Ships	Today
Catalog Page No.	2604

Price shown may not reflect your price. Log in or register.

Additional Info

Hazardous Location Audible Signaling Devices

(A) Vibrating Horn

Produces coded blasts or sustained tones.

Meets NEC Class I, Div. 2, Groups A, B, C, and D; Class II, Div. 2, Groups F and G; Class III.

Tech Specs

Item: Signal Device
Type: Horn
Width: 6"
Height: 4-1/2"
Depth: 3-5/8"
Decibels: 100 dB @ 10 ft.
Voltage: 120VAC
Amps: 0.18 AC
NEMA Rating: 4X
Housing Material: Zinc, With Polyurethane Finish
Color: Black
Standards: UL & cUL Listed, CSA Certified

Section 8 - System Drawings

- Vapor Extraction & Air Injection System Process & Instrumentation Diagram (3 Sheets)
- SVE / Air Injection System Shed Layout

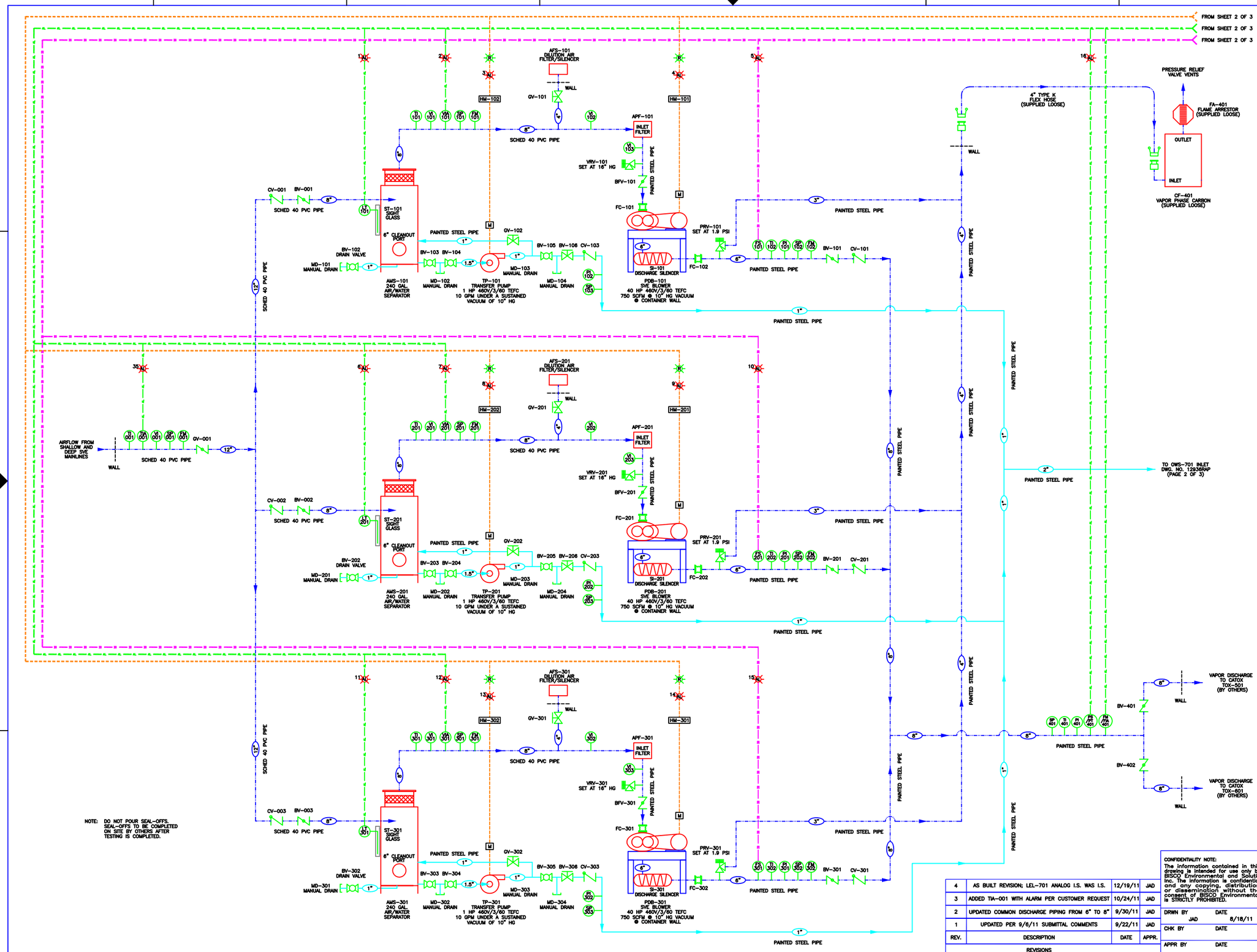

NOTE: DO NOT POUR SEAL-OFFS. SEAL-OFFS TO BE COMPLETED ON SITE BY OTHERS AFTER TESTING IS COMPLETED.

LEGEND

AC	AIR COMPRESSOR
AFS	AIR FILTER/SILENCER
AMS	AIR MOISTURE SEPARATOR
APF	AIR PARTICULATE FILTER
BFV	BUTTERFLY VALVE
BPF	BAG PARTICULATE FILTER
BV	BALL VALVE
CF	CARBON FILTER (VAPOR PHASE)
CO	CLEAN OUT
CV	CHECK VALVE
DD	DRY DISCONNECT
FA	FLAME ARRESTOR
FC	FLEX CONNECTOR
FH	FLEXIBLE HOSE
FIA	FLOW INDICATOR ANALOG
FM	FLOW METER
FS	FLOW SWITCH
FT	FLOW TRANSMITTER
GV	GATE VALVE
HM	HOUR METER
LEL	LOWER EXPLOSIVE LIMIT
LGAC	LIQUID PHASE CARBON
LT	LEVEL TRANSMITTER
M	MOTOR
MCP	MASTER CONTROL PANEL
MD	MANUAL DRAIN
NS	NAPL STORAGE
NT	NAPL TANK
OIT	OPERATOR INTERFACE TERMINAL
OWS	OIL WATER SEPARATOR
PDB	POSITIVE DISPLACEMENT BLOWER
PI	PRESSURE INDICATOR
PLC	PROGRAMMABLE LOGIC CONTROLLER
PS	PRESSURE SWITCH
PT	PRESSURE TRANSMITTER
PRV	PRESSURE RELIEF VALVE
QCV	QUICK CONNECT VALVE
SI	SILENCER
SP	SAMPLE PORT
ST	SITE TUBE
TI	TEMPERATURE INDICATOR
TIA	TEMPERATURE INDICATOR ANALOG
TOX	THERMAL OXIDIZER
TP	TRANSFER PUMP
TSH	TEMPERATURE SWITCH HIGH
VI	VACUUM INDICATOR
VIA	VACUUM INDICATOR ANALOG
VRV	VACUUM RELIEF VALVE
PS/PT	PRESSURE SWITCH / PRESSURE TRANSMITTER
	BALL VALVE
	BUTTERFLY VALVE
	CHECK VALVE
	GATE VALVE
	RELIEF VALVE
	VACUUM BREAKER
	MALE CAMLOCK
	FEMALE CAMLOCK
	PLUGGED TEE (MANUAL DRAIN)
	FLAME ARRESTER
AL	ALARM LIGHT
AL	WARNING LIGHT
E	EMERGENCY STOP
R	RUN LIGHT
	AIR LINE
	INTRINSICALLY SAFE ANALOG LINE
	INTRINSICALLY SAFE LINE
	CONTROL LINE
	WATER LINE
	BREAK

ALARMS

1. AIR MOISTURE SEPARATOR (AMS-101) HIGH HIGH LEVEL
2. SVE BLOWER (PDB-101) LOW VACUUM
3. TRANSFER PUMP (TP-101) MOTOR OVERLOAD
4. SVE BLOWER (PDB-101) MOTOR OVERLOAD
5. SVE BLOWER (PDB-101) LOW FLOW
6. AIR MOISTURE SEPARATOR (AMS-201) HIGH HIGH LEVEL
7. SVE BLOWER (PDB-201) LOW VACUUM
8. TRANSFER PUMP (TP-201) MOTOR OVERLOAD
9. SVE BLOWER (PDB-201) MOTOR OVERLOAD
10. SVE BLOWER (PDB-201) LOW FLOW
11. AIR MOISTURE SEPARATOR (AMS-301) HIGH HIGH LEVEL
12. SVE BLOWER (PDB-301) LOW VACUUM
13. TRANSFER PUMP (TP-301) MOTOR OVERLOAD
14. SVE BLOWER (PDB-301) MOTOR OVERLOAD
15. SVE BLOWER (PDB-301) LOW FLOW
16. COMBINED SVE SYSTEM DISCHARGE HIGH PRESSURE
35. COMBINED SVE INFLUENT HIGH TEMPERATURE

REV.	DESCRIPTION	DATE	APPR.
4	AS BUILT REVISION; LEL-701 ANALOG I.S. WAS I.S.	12/19/11	JAD
3	ADDED TIA-001 WITH ALARM PER CUSTOMER REQUEST	10/24/11	JAD
2	UPDATED COMMON DISCHARGE PIPING FROM 6" TO 8"	9/30/11	JAD
1	UPDATED PER 9/6/11 SUBMITTAL COMMENTS	9/22/11	JAD

REVISIONS

CONFIDENTIALITY NOTE:
The information contained in this drawing is intended for use only by BISCO Environmental and Solutia Inc. The information is confidential and any copying, distribution or dissemination without the consent of BISCO Environmental is STRICTLY PROHIBITED.

BISCO Environmental
Soil & Groundwater Remediation Equipment
Taunton, Massachusetts 02780

TITLE
VAPOR EXTRACTION & AIR INJECTION SYSTEM PROCESS & INSTRUMENTATION DIAGRAM

DRWN BY JAD	DATE 8/18/11	
CHK BY	DATE	
APPR BY	DATE	

SOLUTIA INC.
W.G.KRUMMRICH FACILITY – SAUGET, IL

JOB NO. 12936

SCALE	SIZE	DWG NO.	SHEET	REV
N/A	D	12936RAP	1 OF 3	4

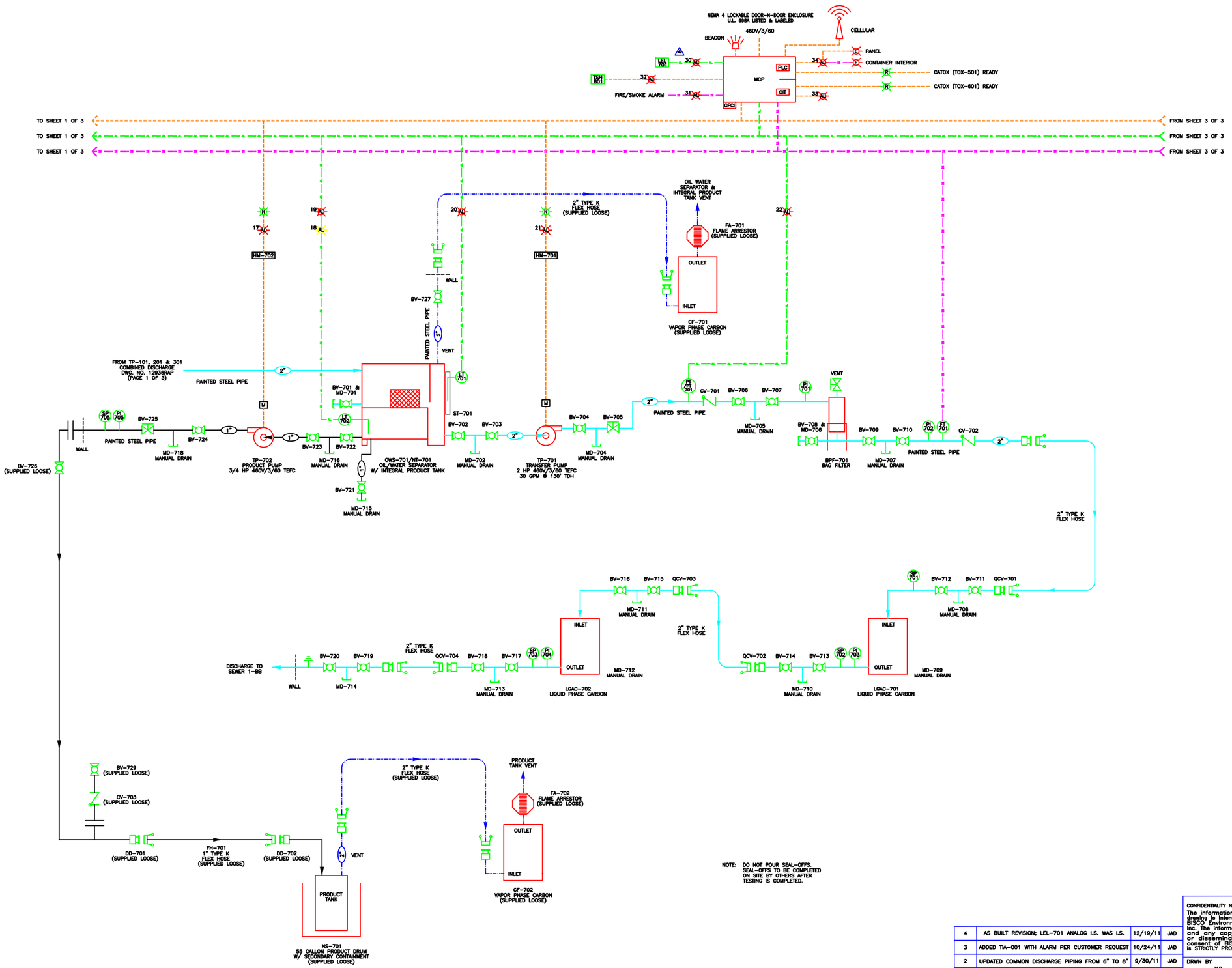

NOTE: DO NOT POUR SEAL-OFFS. SEAL-OFFS TO BE COMPLETED ON SITE BY OTHERS AFTER TESTING IS COMPLETED.

LEGEND

AC	AIR COMPRESSOR
AFS	AIR FILTER/SILENCER
AMS	AIR MOISTURE SEPARATOR
APF	AIR PARTICULATE FILTER
BFV	BUTTERFLY VALVE
BPF	BAG PARTICULATE FILTER
BV	BALL VALVE
CF	CARBON FILTER (VAPOR PHASE)
CO	CLEAN OUT
CV	CHECK VALVE
DD	DRY DISCONNECT
FA	FLAME ARRESTOR
FC	FLEX CONNECTOR
FH	FLEXIBLE HOSE
FIA	FLOW INDICATOR ANALOG
FM	FLOW METER
FS	FLOW SWITCH
FT	FLOW TRANSMITTER
GV	GATE VALVE
HM	HOUR METER
LEL	LOWER EXPLOSIVE LIMIT
LGAC	LIQUID PHASE CARBON
LT	LEVEL TRANSMITTER
M	MOTOR
MCP	MASTER CONTROL PANEL
MD	MANUAL DRAIN
NS	NAPL STORAGE
NT	NAPL TANK
OIT	OPERATOR INTERFACE TERMINAL
OWS	OIL WATER SEPARATOR
PDB	POSITIVE DISPLACEMENT BLOWER
PI	PRESSURE INDICATOR
PLC	PROGRAMMABLE LOGIC CONTROLLER
PS	PRESSURE SWITCH
PT	PRESSURE TRANSMITTER
PRV	PRESSURE RELIEF VALVE
QCV	QUICK CONNECT VALVE
SI	SILENCER
SP	SAMPLE PORT
ST	SITE TUBE
TI	TEMPERATURE INDICATOR
TIA	TEMPERATURE INDICATOR ANALOG
TOX	THERMAL OXIDIZER
TP	TRANSFER PUMP
TSH	TEMPERATURE SWITCH HIGH
VI	VACUUM INDICATOR
VIA	VACUUM INDICATOR ANALOG
VRV	VACUUM RELIEF VALVE
PS/PT	PRESSURE SWITCH / PRESSURE TRANSMITTER
	BALL VALVE
	BUTTERFLY VALVE
	CHECK VALVE
	GATE VALVE
	RELIEF VALVE
	VACUUM BREAKER
	MALE CAMLOCK
	FEMALE CAMLOCK
	PLUGGED TEE (MANUAL DRAIN)
	FLAME ARRESTER
	ALARM LIGHT
	WARNING LIGHT
	EMERGENCY STOP
	RUN LIGHT
	AIR LINE
	INTRINSICALLY SAFE ANALOG LINE
	INTRINSICALLY SAFE LINE
	CONTROL LINE
	WATER LINE
	BREAK

ALARMS

17. TRANSFER PUMP (TP-702) MOTOR OVERLOAD
18. INTEGRAL PRODUCT TANK HIGH LEVEL WARNING
19. INTEGRAL PRODUCT TANK HIGH HIGH LEVEL
20. OIL WATER SEPARATOR (OWS-701) HIGH HIGH LEVEL
21. TRANSFER PUMP (TP-701) MOTOR OVERLOAD
22. BAG FILTER (BPF-701) HIGH PRESSURE
30. HIGH LEL
31. FIRE/SMOKE ALARM (FUTURE)
32. BUILDING INTERIOR HIGH TEMPERATURE
33. VOLTAGE FAULT
34. EMERGENCY STOP

REV.	DESCRIPTION	DATE	APPR.
4	AS BUILT REVISION; LEL-701 ANALOG I.S. WAS I.S.	12/19/11	JAD
3	ADDED TIA-001 WITH ALARM PER CUSTOMER REQUEST	10/24/11	JAD
2	UPDATED COMMON DISCHARGE PIPING FROM 6" TO 8"	9/30/11	JAD
1	UPDATED PER 9/6/11 SUBMITTAL COMMENTS	9/22/11	JAD

REVISIONS

CONFIDENTIALITY NOTE:
The information contained in this drawing is intended for use only by BISCO Environmental and Solutia Inc. The information is confidential and any copying, distribution or dissemination without the consent of BISCO Environmental is STRICTLY PROHIBITED.

DRWN BY JAD DATE 8/18/11
CHK BY DATE
APPR BY DATE

BISCO Environmental
Soil & Groundwater Remediation Equipment
Taunton, Massachusetts 02780

TITLE
VAPOR EXTRACTION & AIR INJECTION SYSTEM
PROCESS & INSTRUMENTATION DIAGRAM

SOLUTIA INC.
W.G.KRUMMRICH FACILITY – SAUGET, IL

JOB NO. 12936

SCALE	SIZE	DWG NO.	SHEET	REV
N/A	D	12936RAP	2 OF 3	4

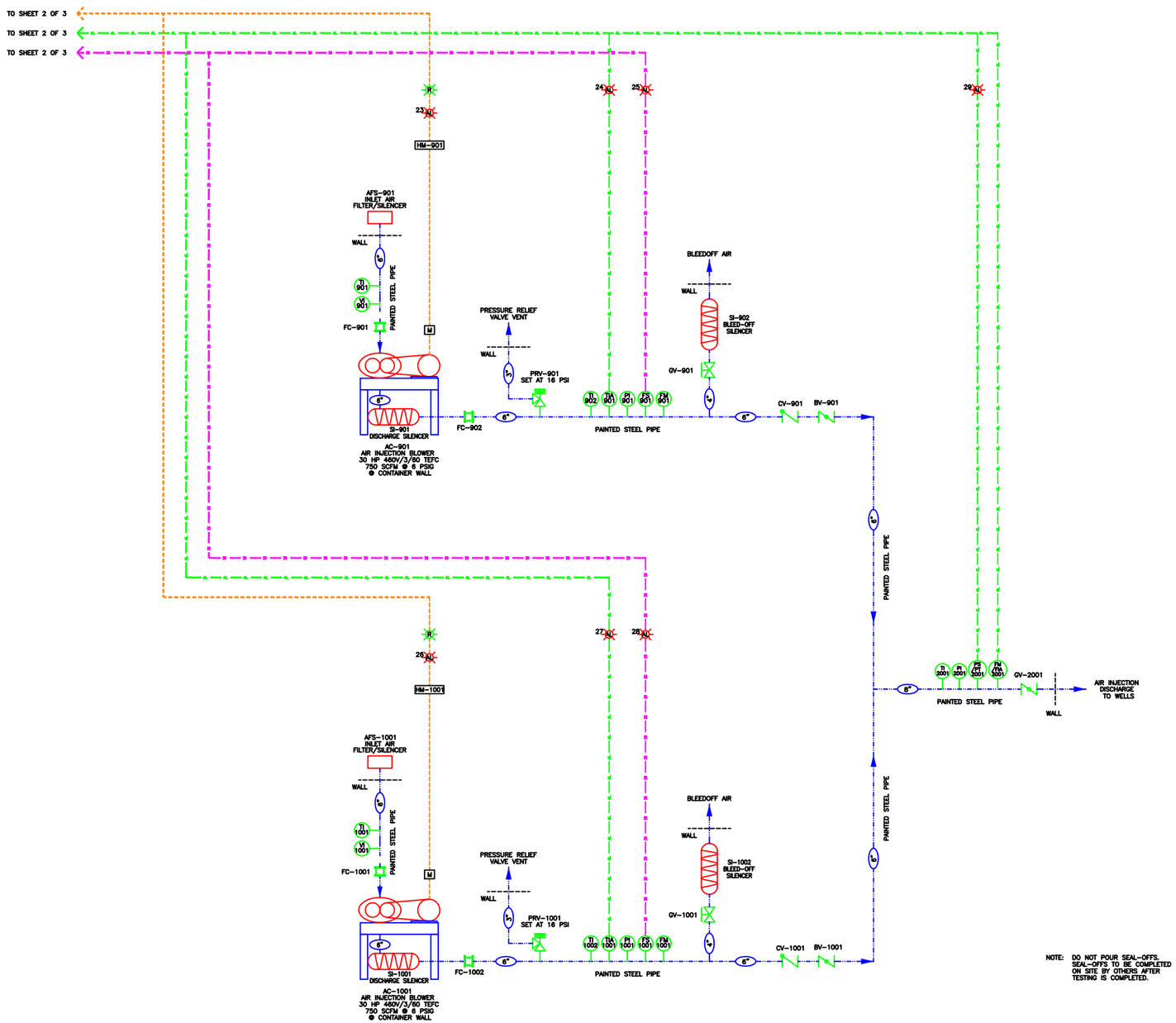

NOTE: DO NOT POUR SEAL-OFFS. SEAL-OFFS TO BE COMPLETED ON SITE BY OTHERS AFTER TESTING IS COMPLETED.

LEGEND

AC	AIR COMPRESSOR
AFS	AIR FILTER/SILENCER
AMS	AIR MOISTURE SEPARATOR
APF	AIR PARTICULATE FILTER
BFV	BUTTERFLY VALVE
BPF	BAG PARTICULATE FILTER
BV	BALL VALVE
CF	CARBON FILTER (VAPOR PHASE)
CO	CLEAN OUT
CV	CHECK VALVE
DD	DRY DISCONNECT
FA	FLAME ARRESTOR
FC	FLEX CONNECTOR
FH	FLEXIBLE HOSE
FIA	FLOW INDICATOR ANALOG
FM	FLOW METER
FS	FLOW SWITCH
FT	FLOW TRANSMITTER
GV	GATE VALVE
HM	HOUR METER
LEL	LOWER EXPLOSIVE LIMIT
LQAC	LIQUID PHASE CARBON
LT	LEVEL TRANSMITTER
M	MOTOR
MCP	MASTER CONTROL PANEL
MD	MANUAL DRAIN
NS	NAPL STORAGE
NT	NAPL TANK
OIT	OPERATOR INTERFACE TERMINAL
OWS	OIL WATER SEPARATOR
PDB	POSITIVE DISPLACEMENT BLOWER
PI	PRESSURE INDICATOR
PLC	PROGRAMMABLE LOGIC CONTROLLER
PS	PRESSURE SWITCH
PT	PRESSURE TRANSMITTER
PRV	PRESSURE RELIEF VALVE
QCV	QUICK CONNECT VALVE
SI	SILENCER
SP	SAMPLE PORT
ST	SITE TUBE
TI	TEMPERATURE INDICATOR
TIA	TEMPERATURE INDICATOR ANALOG
TOX	THERMAL OXIDIZER
TP	TRANSFER PUMP
TSH	TEMPERATURE SWITCH HIGH
VI	VACUUM INDICATOR
VIA	VACUUM INDICATOR ANALOG
VRV	VACUUM RELIEF VALVE
PS/PT	PRESSURE SWITCH / PRESSURE TRANSMITTER
	BALL VALVE
	BUTTERFLY VALVE
	CHECK VALVE
	GATE VALVE
	RELIEF VALVE
	VACUUM BREAKER
	MALE CAMLOCK
	FEMALE CAMLOCK
	PLUGGED TEE (MANUAL DRAIN)
	FLAME ARRESTER
	ALARM LIGHT
	WARNING LIGHT
	EMERGENCY STOP
	RUN LIGHT
	AIR LINE
	INTRINSICALLY SAFE ANALOG LINE
	INTRINSICALLY SAFE LINE
	CONTROL LINE
	WATER LINE
	BREAK

ALARMS

23. AIR INJECTION BLOWER (AC-901) MOTOR OVERLOAD
24. AIR INJECTION BLOWER (AC-901) HIGH TEMPERATURE
25. AIR INJECTION BLOWER (AC-901) LOW FLOW
26. AIR INJECTION BLOWER (AC-1001) MOTOR OVERLOAD
27. AIR INJECTION BLOWER (AC-1001) HIGH TEMPERATURE
28. AIR INJECTION BLOWER (AC-1001) LOW FLOW
29. COMBINED AIR INJECTION SYSTEM HIGH PRESSURE

REV.	DESCRIPTION	DATE	APPR.
4	AS BUILT REVISION; LEL-701 ANALOG I.S. WAS I.S.	12/19/11	JAD
3	ADDED TIA-001 WITH ALARM PER CUSTOMER REQUEST	10/24/11	JAD
2	UPDATED COMMON DISCHARGE PIPING FROM 6" TO 8"	9/30/11	JAD
1	UPDATED PER 9/6/11 SUBMITTAL COMMENTS	9/22/11	JAD

REVISIONS

CONFIDENTIALITY NOTE:
The information contained in this drawing is intended for use only by BISCO Environmental and Solutia Inc. The information is confidential and any copying, distribution or dissemination without the consent of BISCO Environmental is STRICTLY PROHIBITED.

DRWN BY JAD DATE 8/18/11
CHK BY DATE
APPR BY DATE

BISCO Environmental
Soil & Groundwater Remediation Equipment
Taunton, Massachusetts 02780

TITLE
VAPOR EXTRACTION & AIR INJECTION SYSTEM
PROCESS & INSTRUMENTATION DIAGRAM

SOLUTIA INC.
W.G.KRUMMRICH FACILITY – SAUGET, IL

JOB NO. 12936

SCALE	SIZE	DWG NO.	SHEET	REV
N/A	D	12936RAP	3 OF 3	4

REVISIONS			
REV.	DESCRIPTION	DATE	APPR.
1	UPDATED PER SHED CHANGE ORDER & PER 9/6/11 SUBMITTAL COMMENTS	9/22/11	JAD

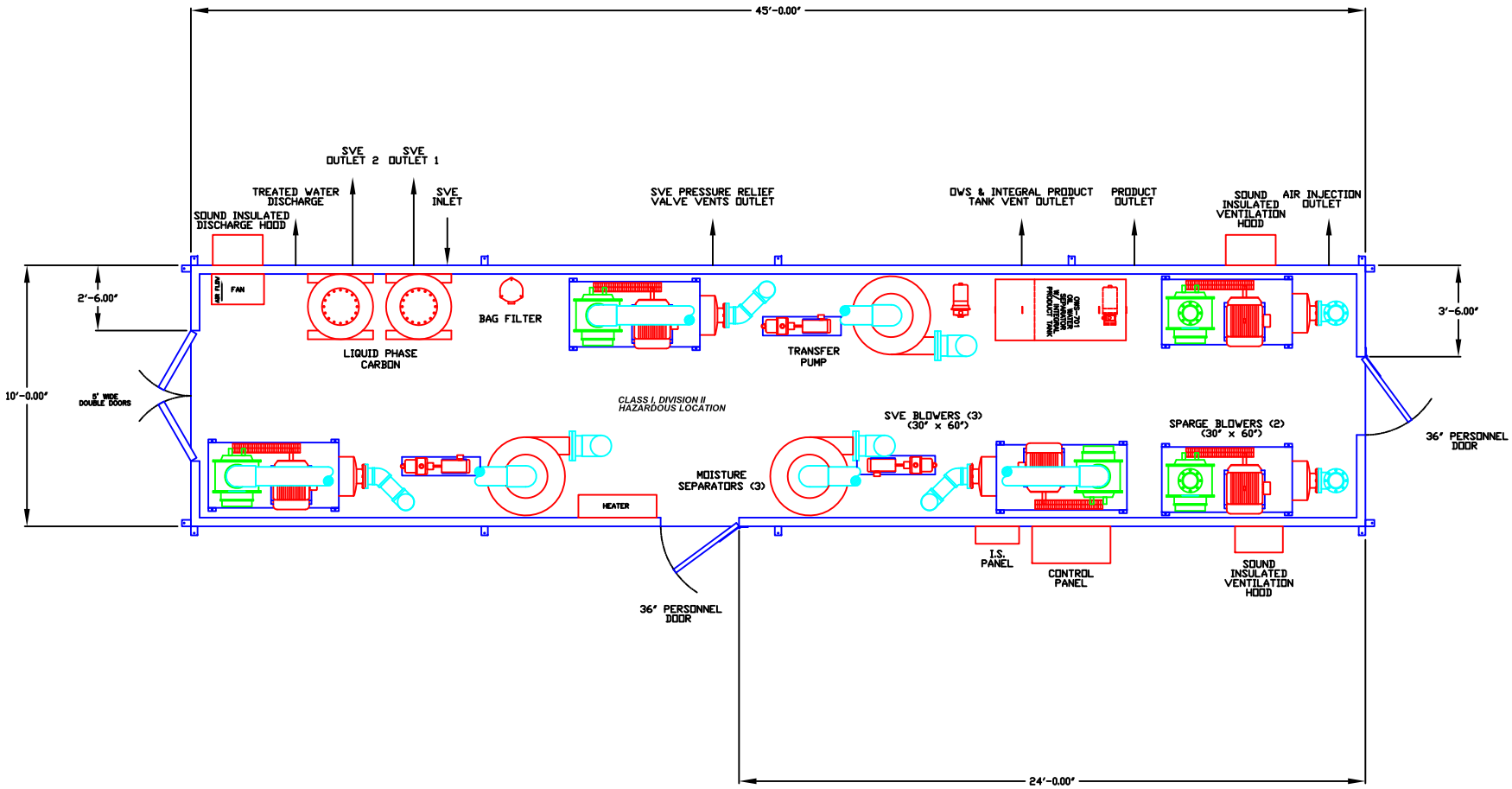

NOTES:

1. INTERIOR WALLS & CEILING COVERED WITH QUILTED SOUND BLANKETS.
2. ALL DOORS TO HAVE HOLD BACK LATCHES TO KEEP DOORS FROM SWINGING SHUT.
3. DO NOT POUR SEAL-OFFS. SEAL-OFFS TO BE COMPLETED ON SITE BY OTHERS AFTER TESTING IS COMPLETED.

CONFIDENTIALITY NOTE:
The information contained in this drawing is intended for use only by BISCO Environmental and Solutia Inc. The information is confidential and any copying, distribution or dissemination without the consent of BISCO Environmental is STRICTLY PROHIBITED.

BISCO Environmental
Soil & Groundwater Remediation Equipment
Taunton, Massachusetts 02780

DRWN BY JAD	DATE 6/24/11	TITLE SVE/AIR INJECTION SYSTEM SHED LAYOUT	
CHK BY	DATE	SOLUTIA INC. W.G. KRUMMRICH FACILITY – SAUGET, IL	JOB NO. 12936
APPR BY	DATE	SCALE 1"=40" / SIZE C / DWG NO. 12936RAL	SHEET 1 OF 1 / REV 1

Section 9 – Warranty

- Limitation of Warranty & Limitation of Remedy

Limitation of Warranty

&

Limitation of Remedy

All products not manufactured by BISCO Environmental carry the original manufacturer's warranty. Copies are available upon request.

BISCO Environmental warrants its packaged and manufactured equipment against any defect in material or workmanship, under normal use and storage, for a period of twelve (12) months from date of manufacture. In the event that products are found to be defective within the warranty period, BISCO Environmental's sole obligation and remedy shall be the furnishing of replacements for any defective parts, and such replacement shall be furnished but not installed by BISCO Environmental. BISCO Environmental will not be liable for special or consequential damages in any claim, suit or proceedings arising under this warranty, nor will BISCO Environmental accept any liability for claims for labor, loss of profit, repairs or other expenses incidental to replacement. The product warranty expressed above is our only warranty and may not be verbally changed or modified by any representative of BISCO Environmental. All freight costs incurred in shipping parts to or from BISCO Environmental or to the manufacturer if necessary, are at the expense of the customer.

BISCO Environmental expressly disclaims any warranties, expressed or implied, including any warranty of merchantability or fitness for a particular purpose or any warranty arising from a course of dealing or usage of trade. Except to the extent required by applicable law, BISCO Environmental shall not be liable, in tort, contract or otherwise, for any loss or damage, whether direct, consequential or incidental, of any person or entity arising in connection with the equipment.

APPENDIX D

ThermOx Operation and Maintenance Manuals

Operation & Maintenance Guide

(Rev 1)

INTELLISHARE ENVIRONMENTAL

CLEAN AIR SOLUTIONS

Client:
XDD

Project:
Solutia – W. R. Krummerich, Sauget, IL

Equipment:
2000 CFM Thermal Oxidizer with Heat Exchange & Catalyst Module
Unit Number N-11-1198
November 2011

1422 Indianhead dr. ◊ Menomonie, WI 54751 ◊ Phone: 715.233.6115 ◊ Fax: 715.232.0669 ◊ www.intellishare-env.com

Contents

INTRODUCTION 1-1
Purpose 1-1
Precautions 1-1
Lower Explosive Limit (LEL) 1-1
Site Considerations 1-2
Process Definition 1-3
Volatile Organic Compounds (VOCs) 1-3
Catalytic Reaction 1-3
Thermal Oxidizer Mode 1-3
Catalyst Mode 1-3
SYSTEM SPECIFICATION 2-1
Manufacturing Information 2-1
Operating Specification 2-1
Mechanical Specification 2-2
Burner and Associated Equipment 2-2
Instruments 2-2
Master Bill of Material 2-3
Component Data 2-7
MAINTENANCE & SAFETY 3-1
System Maintenance 3-1
Preventive Maintenance Evaluation Program 3-1
Preventive Maintenance Evaluation Initiation 3-2
Maintenance Checklist 3-3
Spare Parts 3-4
Oxidizer Mode Change Instructions 3-5
Catalytic Mode to Thermal Mode 3-5
Thermal Mode to Catalytic Mode 3-6
Safety Instructions for Equipment Operation and Maintenance 3-7
Hazardous Communication 3-7
General Information (WARNING) Chemical Reactions 3-8
Electrical (DANGER) Electrocution 3-8
Gas Train (DANGER) Fire or Explosion 3-8
High Temperature (CAUTION) Heat and Burns 3-9
Rotating Equipment (WARNING) Caught In or Struck By 3-9
Confined Space (DANGER) Suffocation or Asphyxiation 3-9
Slippery / Elevated Surfaces (CAUTION) Slips, Trips, or Falls 3-9
Safety Precautions 3-10
Potential Hazards 3-10
TERMS & WARRANTY 4-1
Standard Terms & Conditions 4-1
Prices 4-1
Cancellations 4-1
Shipping Schedules 4-1

Electrical Equipment and Installation 4-1
Acceptance and Testing of Equipment 4-1
Risk of Loss 4-1
Limitation of Liability 4-1
Security Interest 4-2
Attorney's Fees 4-2
Ordinances 4-2
Indemnification 4-2
Miscellaneous 4-2
Warranty 4-3
Scope and Duration 4-3
Warranty Exclusions 4-3
Catalyst Deactivation & Poisoning Agents 4-4
Oxidation Catalyst Warranty & Limitation of Remedy & Liability 4-5
MECHANICAL DRAWINGS 5-1
Process & Instrumentation Diagram (P&ID) 5-2
General Arrangement Drawing 5-3
Oxidizer Installation & Mode Change Drawings 5-4
LOGIC SEQUENCE 6-1
System Pre-Start – 6-1
System Start-Up 6-2
System Start-Up (Continued) 6-3
Putting the System On-Line 6-3
System Shut-Down 6-3
System Stand-by (Disabled) 6-4
System Run Time 6-4
Alarm History 6-5
ELECTRICAL DRAWINGS 7-1
CONTROLLER SET POINTS 8-1
Inlet Temperature Control 8-1
Outlet Temperature Control 8-4
High Limit Temp Control 8-7
ABB Chart Recorder Settings 8-9
ABB Software – Datamanager & Emulation 8-9
General Information 8-10
Programming SM500 using PC (Emulator) 8-11
Process Flow Sensor Calculation Information 8-13
Process Flow Sensor Conversion Table 8-13

INTRODUCTION

Purpose

Intellishare Environmental, Inc.' s 2000 CFM Thermal Oxidizer with Catalyst Module destroys organic vapor contaminants which are discharged from soil vapor extraction, ground water treatment systems, or other systems during site remediation.

Precautions

Lower Explosive Limit (LEL)

It is important to understand the meaning of the term Lower Explosive Limit (LEL), sometimes also referred to as Lower Flammability Limit (LFL).

Lower Explosive Limit: Gases or vapors which form flammable mixtures with air or oxygen have a minimum concentration of vapor in air or oxygen below which propagation of flame does not occur on contact with a source of ignition (LEL).

There is also a maximum proportion of vapor or gas in air above which propagation of flame does not occur (UFL). These boundary line mixtures of vapor or gas with air, which if ignited will just propagate flame, are known as the "lower and upper flammable or explosive limits", and are usually expressed in terms of percentage by volume of gas or vapor in air.

The LEL is based upon normal atmospheric temperatures and pressures and the general effect of increase of temperature or pressure is to decrease the lower limit and increase the upper limit.

Applicable codes require thermal solvent processing systems to operate no higher than 25% LEL without an LEL monitor and control. Insurance companies may require LEL systems if an oxidation system is added to existing machinery.

For further information concerning the maintenance of safe LEL levels, the operator should refer to NFPA Bulletin 86A and FM Loss Prevention Bulletin No. 14.15. These bulletins will delineate how safety interlocks can be implemented in the operator's system.

!! DANGER!

Never operate the catalytic or thermal oxidizer at a concentration of vapors greater than 25% of the LEL. Even low concentrations of extremely volatile vapors may cause an explosion within the reactor system with the possibility of serious personal injury and property damage.

!! DANGER!

It is the operator's responsibility to make certain that the concentration of vapors entering the catalytic or thermal oxidizer remains less than 25% of the LEL of the vapors.

Site Considerations

1. Sites being remediated may contain equipment using relatively large quantities of gas, oil, steam, and/or electricity. Any high energy equipment carries with it a potential danger to personnel and property, and must be treated accordingly.

2. All equipment must be installed and operated in accordance with OSHA regulations, all applicable electrical, plumbing, steam boiler and building codes, necessary permits secured, and meet the requirements of your insurance carrier. Unless specified in our proposal, these are areas of customer responsibility.

3. The area should be maintained free from any hazards that would prevent easy movement around the catalytic reactor and electrical control cabinet. No flammable or otherwise hazardous materials should be stored in the immediate vicinity of the catalytic reactor. No work materials, papers or other materials should be placed on the catalytic reactor.

4. Review the operation of the oxidizer with your site safety officer before starting the unit. Any suggestions and additions should be included with these instructions.

All those involved in the operation of the system should read and understand the complete operating instructions before starting the unit. Safety meetings of all those involved with the system should be held periodically in conjunction with implementing acceptable maintenance procedures.

5. Any change in process load, temperature, ventilation or other modification should be checked with Intellishare Environmental, Inc. in advance to determine equipment capabilities.

6. Determination of catalyst or thermal efficiency in hydrocarbon oxidation is made by gas analysis of samples drawn from the system prior to and immediately after the catalyst exit face or in a thermal oxidizer system prior to and immediately after the combustion chamber. A gas analysis should be performed in the event the operator suspects any loss of catalytic activity via visual inspection or by observing that the temperature rise across the catalyst has been reduced. Before attempting any corrective measures, contact Intellishare Environmental, Inc. We will assist in determining corrective action, and if applicable, will provide specific instructions.

7. It is our desire to provide the operator with the safest and most productive equipment possible. Revised national safety standards and technological improvements will require the user to periodically review this equipment, and may require upgrading for compliance.

Process Definition

Volatile Organic Compounds (VOCs)

Volatile Organic Compounds (VOCs) are hydrocarbons which, in a gaseous or vapor form, regulatory agencies have determined contribute to air pollution. Specifically, these are hydrocarbon compounds which can enter the atmosphere (become volatile) and which chemically react with each other and other elements in the air as a result of exposure to sunlight. Such chemical reaction due to sunlight is called "photo-chemical activity". This photo-chemical activity results in what we commonly call "smog".

Catalytic Reaction

With reference to chemistry, a catalyst is a material which allows or causes a chemical reaction to take place under certain conditions which would not ordinarily occur given those conditions. For example, given a compound such as gasoline, mixed with sufficient oxygen for burning, if it was desired to ignite the mixture by simply raising the air temperature (as opposed to ignition by exposure to a flame or spark), the air temperature would have to be raised to over 1,000°F.

However, in the presence of the proper catalyst, the gasoline would combust (oxidize) with the air temperature at only 500°F. Thus, the catalyst causes the reaction to occur, even though the temperature is such that the burning could not possibly take place without the presence of the catalyst.
A unique property of the catalyst is that it is not consumed in the reaction. When a hydrocarbon burns, it is converted to carbon dioxide and water.

Thermal Oxidizer Mode

During thermal operation, VOC-laden air is delivered from the SVE system, into the heat exchanger and into the system's combustion chamber. The treated air is then directed over the hot side of the heat exchanger and finally, the treated air is exhausted into the atmosphere.

Catalyst Mode

During catalytic operation, VOC-laden air is delivered from the SVE system, into the heat exchanger and into the system's combustion chamber. The pre-heated air is then directed through the catalyst module. When the VOC-laden air passes through the catalyst, an exothermic (heat producing) reaction takes place. The VOCs in the air stream are converted to carbon dioxide and water vapor and the air temperature is raised by the process. The treated air is then directed over the hot side of the heat exchanger and finally, the treated air is exhausted into the atmosphere.

SYSTEM SPECIFICATION

Manufacturing Information

Manufacturer:	Intellishare Environmental, Inc.
Model:	TO2000
Type:	Thermal Oxidizer with Heat Exchanger & Catalyst Module
Serial Number:	N-11-1198
Date of Manufacture:	November 2011

Operating Specification

All values established for required VOC destruction efficiency

Maximum VOC Content:	40% LEL
VOC Destruction Efficiency:	99%
Maximum Process Air Stream:	2000 SCFM
Temperature Control Method:	Firing rate of burner controlled via temperature PID loop controller
Thermal Up to Temperature:	1350˚ F
Thermal Operating Temperature:	1400˚ F
Thermal Mode High Limit Safety By-pass mode:	1600˚ F
Thermal Mode High Limit Safety HX-Mode	1550˚ F
Thermal Exit Dilution Control:	1450˚ F
Catalyst Ready Temperature:	550˚ F
Catalyst Inlet Temperature Control:	600˚ F
Catalyst Inlet High Temperature Safety:	900˚ F
Catalyst Exit Dilution Control:	950˚ F
Catalyst Temperature High Limit Safety:	1100˚ F
Flame Arrestor Exit High Limit:	250˚ F

(Operation specification continued)

Process Blower Air Flow Differential Pressure:	0.4” w.c.
Combustion Blower Air Flow Differential Pressure:	0.4” w.c.
Catalyst Differential Pressure:	6-8” w.c.
Low Gas Pressure:	12” w.c.
High Gas Pressure:	100” w.c.

Mechanical Specification

Inner Wetted Material:	High Temperature Refractory
Outer Skin Material:	Carbon Steel
Outer Skin Thickness:	7 Gauge
Temperature Sensors:	K-Type Thermocouples

Burner and Associated Equipment

Manufacturer:	Maxon
Model:	6” Kinemax Series G
Type:	Primary Air Burner
Maximum Fire Rating:	6,000,000 BTU/HR
Voltage Input:	480/3/60

Instruments

Inlet Temperature Control:	Honeywell
Outlet Temperature Control:	Honeywell
High Temperature Limit:	Honeywell
Chart Recorder:	ABB SM500
LEL:	MSA
Differential Pressure Transmitters:	Foxboro

Master Bill of Material

P&ID	Qty	P/N	Title	Detail	Cut Sheet
	1		BURNER		
Burner	1	KINEMAX 6" G	MAXON KINEMAX, 6" SERIES G	NATURAL GAS, 6,000,000 BTUH	Maxon Kinemax
IT-1	1	AO6SA6X	TRANSFORMER, IGNITION	120/6000V, #12178 EPOXY FILLED	Dongan A06SA6X
S/G	1	120054	PEEPSIGHT, 2/3 PIPE UNION, 2" NPT	ECLIPSE	N/A
IT-1	2	I1-02-2046	BOOT, PROTECTOR	#02-2046	N/A
IT-1	1	I1-SSN	TERMINAL, SPRING SNAP	#021958	N/A
IT-1	1	I1-RSN	TERMINAL, RING	HIGH VOLTAGE	N/A
IT-1	10	I1-734803	WIRE, IGNITION	STANDARD BLACK	N/A
	1		HEAT EXCHANGER		
HX-1	1	CUSTOM HX	TUBE & SHELL 2000 CFM	NOMINAL 50-60% efficient, 309 ss internals, internally insulated, 304 ss casing	N/A
Damp-1&2	2	FNW731B12	BUTTERFLY VALVE, 12" WAFER	CI BODY, SS. DISC	FNW 731 Butterfly Valve
	1	SB10A10A12000140	FLEX HOSE SS. 150# FLANGES	12" DIA., 14" OAL	N/A
	1		FAN/FAN ASSEMBLY		
M1	1	NYB-1910-20HP -	BLOWER, PRESSURE, NYB SIZE 1910, AL WHEEL, ARR 8	20 HP, 3600 RPM, TE, 254T 3-60-230/460 V	NYB PB IM, NYB PB
M2	1	NYB-2206-10HP	BLOWER, PRESSURE, NYB SIZE 2206, AL WHEEL, ARR 4	10 HP, 3500 RPM, TE, 215T, 3-60-230/460V	NYB PB IM, NYB PB
Dilution Filter	1	F72-8	FILTER, AIR INTAKE & FILTER SILENCER, 8"	8" FLANGE CONNECTION, FOAM ELEMENT	Stoddard F72 Series
M2 Filter	1	F72-6	FILTER, AIR INTAKE & FILTER SILENCER, 10"	6" FLANGE CONNECTION, FOAM ELEMENT	Stoddard F72 Series
PDI-1 PDI-2	2	A40-108	FILTER SERVICE INDICATOR	STODDARD	NA
M6 valve	1	8BWM-1153-N	VALVE, BUTTERFLY, 8", ANGLE SEAT	VALV-TECH, BARE STEM	Valv-tech BL-BW
M5 Valve	1	10BWM-1153-N	VALVE, BUTTERFLY, 10", ANGLE SEAT	VALV-TECH, BARE STEM, W/KEYWAY	Valv-tech BL-BW
HV-6	1	30-0600-11010-622	VALVE, BUTTERFLY, 6", CI, BUNA SEAT	BRAY SERIES 30 W/GEAR OPERATOR	BRAY SERIES 30

Master Bill of Material (continued)

P&ID	Qty	P/N	Title	Detail	Cut Sheet
	1		FUEL TRAIN		
PI-2	1	J7840P	GAUGE, LOW PRESSURE DIAPHRAGM, 0-15 PSIG	2.5 FACE, 1/4" LOWER MOUNT, LIQUID FILLED	Marsh Severe Service Gauge
PI-3	1	G22704	GAUGE, LOW PRESSURE DIAPHRAGM, 0-30" WC	2.5 FACE, 1/4" LOWER MOUNT, FLUTTER GUARD	Ashcroft Pressure Gauge 1490
Main Gas	2	701-1065	VALVE, BALL, 2" NPT	JOMAR FULL PORT BRASS	Jomar T-100
Pilot Gas	2	701-1040	VALVE, BALL, ½" NPT	JOMAR FULL PORT BRASS	Jomar T-100
Primary & Sec	2	D230475	PRESSURE REGULATORS, FRI 712/6	KARL DUNGS	Dungs Pressure Reg FRI-6
S1-S2	1	230-793 VP	DMV-D 703/622 DUAL MODULAR VALVE w/VENT VALVE ADAPT, 1-2" BODY SIZE, 120VAC	7 PSI, FAST OPEN/CLOSE, ADJ MAX FLOW, PROOF OF CLOSURE ON VALVE 2	Dungs DMVD Multivalve
S1-S2	2	D225047	ADAPTER ACCESSORIES, 1/4" NPT	FOR DMV & FRI - KDI FUEL TRAINS	N/A
ZI-2	1	46000-6	VISUAL INDICATOR FOR DMV	DUNGS FUEL TRAIN VALVE ASSEMBLY	N/A
PSH-1	1	46015-8	SWITCH, HIGH GAS PRESSURE, 40-200" WC, DIAL ADJ, MANUAL RESET	1/4" NPT PIPE MOUNT, NEMA4, UL/CSA/FM, GMH-A4-4-8, DUNGS FUEL TRAIN VALVE ASSY	Dungs Pressure Switch GAO, GMH
PSL-1	1	46016-6	SWITCH, LOW GAS PRESSURE, 12-60" WC, MANUAL RESET	1/4" NPT PIPE MOUNT, NEMA4, UL/CSA/FM, GML-A4-4-8 , DUNGS FUEL TRAIN VALVE ASSY	Dungs Pressure Switch GAO, GMH
S1-S2	1	D214975	ADAPTOR, FOR SIDE MT HIGH GAS SW ON DMV	DUNGS FUEL TRAIN VALVE ASSY, GAO, GML GMH A2	N/A
S1-S2	2	D219008	TEST NIPPLE	ACCESSORIES, G 1/8 FOR DMV	N/A
Primary Sec	2	D2221997	FLANGE 2" NPT, DMV 703	DUNGS FUEL TRAIN VALVE ASSY	N/A
S1-S2	1	D229846	SPRING #5, RED, 10 TO 22" WC	FOR FRI 710 & 712 PRESSURE REGULATORS	N/A
S1-S2	1	D229847	SPRING #6, YELLOW, 12-28" W.C.	FOR FRI 710 & 712 PRESSURE REGULATORS	N/A
S1-S2	1	D229849	SPRING #8, PINK, 40-60" W.C.	FOR FRI 710 & 712 PRESSURE REGULATORS	N/A

Master Bill of Material – Fuel Train (continued)

P&ID	Qty	P/N	Title	Detail	Cut Sheet
M3	1	100099	KIT, ACTUATOR MOUNTING, 0.5-4", V2	FOR ECLIPSE/DUNGS FUEL SYSTEMS	N/A
S3-S4	2	8214G20	VALVE, SOLENOID, ASCO, 1/2"	NORMALLY CLOSED, 120V, W/18" NPT TAPS	Asco Series 8214 V6676R5
S5	1	8214G023	VALVE SOLENOID, ASCO, ½" NPT, GAS VENT	ALUM BODY, NORMALLY OPEN, 120 VAC	ASCO 8214 V6675R3
S6	1	8214G054	VALVE SOLENOID, ASCO, 1" NPT, GAS VENT	ALUM BODY, NORMALLY OPEN, 120 VAC	ASCO 8124 V7466R2 & Sec (2)
Pilot - Primary	1	M1-325-3-1/2	REGULATOR, 1/2", NO LIMITER	PILOT GAS PRESSURE	Maxitrol MI2010, MS2055
Pilot - Primary	1	211-1125	SPRING, RED, 10-22" W.C.	FOR M1-325 PILOT REGULATOR	N/A
Main Gas	1	011-2035K	Y-STRAINER 2" NPT	100 MESH SS SCREEN	Mueller CI y-Strainer
Pilot	1	VA-3018	GAS COCK, 1/2", ADJUSTABLE		N/A
FI-3	1	5M175CTR	METER, ROOTS GAS, MECHANICAL TOTALIZER	FLANGED CONNECTION	Roots Meter B3_5M175
			CONTROLS		
M3-M6 ZSL-3 ZSH-6	2	M7284C-1000	ACTUATOR, HONEYWELL 120V, 4-20 mA INPUT W/AUX SWITCH	MODUTROL SERIES 72, 150 IN/LB ADJ STROKE	HW Series 72 Mod Motors
M5	1	RCEL-006-A120	ACTUATOR, NEMA 4, OPEN/CLOSE, 520 IN/LBS TORQUE, 120 VAC,	MANUAL OVERRIDE, POSITION INDICATOR, ROTORK RCEL SERIES	RCEL IM Manual RCEL Series
M6	1	Y20DAA-KIT-2	LINKAGE ASSEMBLY, VALLEY	FOR HONEYWELL DILUTION VALVE ACTUATOR	N/A
UV	1	C7061A1012	SCANNER, UV FLAME DETECTOR, SELF-CHECKING	HONEYWELL PURPLE PEEPER	HW C7061AUV Scanner
PDSH-2	1	46020-5	SWITCH, AIR PRESSURE, 2-20" WC	1/4" NPT, NEMA4, DIAL ADJ, UL/CSA/FM, AA-A2-6-5, DUNGS	Dungs Air Pressure AA A2
PDSL-1 PDSL-2	2	46020-3	SWITCH AIR PRESSURE, .4-4" WC	1/4" NPT, AA-A2-6-3, DUNGS	Dungs Air Pressure AA A2

Master Bill of Material (continued)

P&ID	Qty	P/N	Title	Detail	Cut Sheet
		MCC & MCP	CONTROL PANEL (S)	SEE SHEET N-11-1198-450 & 451 FOR COMPLETE LIST OF PANEL PARTS	
			CATALYST		
Cat	2	204803	CATALYST, 22-1/4"x 23-1/4", 3.5" DEPTH, 400CPSI	WHOLE BLOCK, NANO HYPERCAT ACP	N/A
Cat	2	204804	CATALYST, 11.13"x 23-1/4", 3.5" DEPTH, 400CPSI	HALF BLOCK, NANO, HYPERCAT ACP	N/A
Cat	2	TEST COUPON	TEST CORE, VOC, 200 CPSI	ATTACHED TO CATALYST	NA
			FLAME ARRESTOR		
Flame Arrestor	1	80019959	ARRESTOR, FLAME ELEMENT BANK 8"	GROTH, 6061 SCH 805 AL PIPE, 16" DIA	Groth FA 7618-7628
			INSTRUMENTATION		
TE-1,A,B TE-2,A,B TE-3,A,B TE-4,A,B	4	KKK48U-027-00-8HN34	THERMOCOUPLE, TRIPLE ELEMENT, ½" NPT PROCESS CONNECTION, CI HEAD, 316 SS PROBE	TYPE K, 27", PYROMATION	Pyromation Brochure & Tech
TE-5	1	KK48U-012-00-8HN34	THERMOCOUPLE, DUAL ELEMENT, ½" NPT PROCESS CONNECTION, CI HEAD, 316 SS PROBE	TYPE K, 12", PYROMATION	Pyromation Brochure & Tech
FE-2	1	VF-2-BV	FLOWMETER, VISI-FLOAT 0.2-2 SCFH	DWYER	Dwyer Visifloat Series VF
FE-1	1	DS300-10-LV	FLOW SENSOR, 10", LESS VALVES	DWYER	Dwyer Flow Sensor DS-300
FIT-1	1	IDP10-A22A01F-M1L1 0-5"WC	TRANSMITTER, DIFF. PRESS, FOXBORO, IDP10 4-20 mA OUTPUT, 316SS	CALBRATED 0-2" W.C., FM EXP CLASS I, DIV 1, GROUPS B, C, & D.	Foxboro IDP10 Data, O&M
FIT-3	1	IDP10-A22A01F-M1L1 0-20"WC	TRANSMITTER, DIFF. PRESS, FOXBORO, IDP10 4-20 mA OUTPUT, 316SS	CALBRATED 0-1" W.C., FM EXP CLASS I, DIV 1, GROUPS B, C, & D.	Foxboro IDP10 Data, O&M
PDI-3	1	MAG 2010	GAUGE, MAGNEHELIC 0-10"WC	DWYER	Dwyer Mag Gauge 2000 Ser
AIT-1 AE-1	1	ULTIMA-XPE32U3S20012100	LEL MONITOR, CAT BEAD TYPE, W/LCD DISPLAY	316 SS ENCLOSURE, CALBRATED ON BENZENE CURVE	Ultima X Series O&M, IR LEL

Component Data

Please refer to accompanying CD for component specification information.

MAINTENANCE & SAFETY

System Maintenance

Though relatively trouble-free in operation, the oxidizer is primarily a piece of combustion equipment with consequent mechanical rotating equipment in the form of fans and motors, temperature and fuel controls with safety interlocks, an electrical control system, loop controls to maintain temperature and flow rate parameters for maximum efficiency, and other components. Many elements of the oxidizer design are included in compliance with Factory Mutual (FM), Industrial Risk Insurers (IRI), and National Fire Protection Association (NFPA) requirements.

As such, like any piece of combustion equipment, the oxidizer must be regularly maintained and should be fully inspected and evaluated at least annually.

A checklist of maintenance items and recommendations is included as a separate entry in this manual. The maintenance items should be reviewed and carried out on an as needed basis and at least once per year.

Regular maintenance not only assures compliance with the appropriate clean air regulatory agency requirements, and the requirements of safety regulatory bodies and insurance carriers; it also helps maintain equipment efficiency for minimum operating costs.

Preventive Maintenance Evaluation Program

As an aid to maintaining oxidizer operation at peak efficiency, Intellishare Environmental, Inc. offers a Preventive Maintenance Evaluation which includes a complete inspection and evaluation of oxidizer components and performance along with tuning and adjustment, as needed.

It is recommended that the Preventive Maintenance Evaluation be performed at least once per year.

A check list and evaluation summary is provided with each inspection. The summary identifies maintenance requirements and recommendations for corrective action if any is required.

The preventive maintenance evaluation is custom tailored to the particular piece of equipment inspected, but includes:

1. Mechanical

An external and internal inspection of the oxidizer and mechanical components is performed. This includes fan and motor assemblies, burner (or heater on electric units), catalyst, reactor chamber, stack and observation ports, access doors, ductwork, dampers, and linkages.

2. *Electrical*

Electrical components are visually inspected and electrically tested for proper function. This includes switches, lights, relays, timers, controllers, recorders, motors, motor starters, motor drives, damper and/or valve actuators, disconnects, wiring, alarm detection and annunciation, and logic circuits.

3. Process Control Loops

The temperature and pressure control loops are inspected and tested to verify correct operation of sensors, loop controllers, and end control devices. This includes tests of the electric heater\burner firing rate, fan variable speed drive or vortex damper reaction, actuator performance, and loop tuning adjustment as needed.

4. Catalyst Evaluation and Oxidation Efficiency Test

An oxidation efficiency test is performed using a portable detector unit. Additionally, samples of the catalyst are sent for independent destruction efficiency evaluation. The catalyst evaluation and oxidation efficiency tests are valuable for detecting potential problems (should any exist) early, helping to avoid clean air compliance problems before they occur.

Preventive Maintenance Evaluation Initiation

For complete information on the Preventive Maintenance Evaluation Program contact the Technical Services Department of Intellishare Environmental, Inc.

Maintenance Checklist

Properly maintained equipment ensures maximum operating performance and minimum operating costs. Following is a schedule of suggested regular maintenance. Please refer to each individual manual for a more comprehensive maintenance list.

Main Components	**Test**	**Monthly**	**Quarterly**	**Semi-Annually**	**Annually**
Fan Mounting Bolts	Tightness	X			
Fan Bearings (Use a premium lithium NLGI #2 EP Grease such as Mobil XHP or Equivalent)	Lubrication	X			
Fan Motor Bearings (Use Polyurea Synthetic Grease only – Mobil Polyrex or Equiv, Do not over lubricate)	Lubrication	X			
Fan Motor Amperage	Windings	X			
Maxon Micro Ratio Valve (Use a premium lithium NLGI #2 EP Grease such as Mobil XHP or Equivalent)	Lubrication	X			
Gas Train	Leaks	X			
Burner/Flame Visual	Quality	X			
Flame Strength	Signal	X			
Dilution Valve Linkage	Moves Freely	X			
Instrumentation	Condensate	X			
Temperature Controller	Accuracy				X
Electrical Wiring Terminals	Tightness			X	X
Flame Arrestor	Pressure Drop				X
Catalyst	Signs of plugging or discoloration				X
Chart Recorder	Download Data	X			
Destruction Efficiency	Various				X
LEL Meter – Use 0.6 propane - display should read 37% for benzene curve.	Calibration		X		

Spare Parts

The following is a list of suggested spare parts to keep on hand for the oxidizer

Qty	Part Number	Description
2	XXXXXXX	Grease Gun(s)
1	Mobil POLYREX EM 14OZ (or Equivalent)	Polyurea synthetic grease for blower motors
1	MOBILGREASE XHP (or Equivalent)	NLGI #2 Lithium based premium grease
1	R7861 A1026	UV Amplifier, Honeywell for self checking sensor
1	C7061A1012	UV Sensor, Honeywell Self Check NEMA 4
1	KKK48U-027-008-NH34	Thermocouple, Triple, Type K, 27"
1	46020-3	Pressure Switch, Dungs .4-4” W.C.
1	34043	Spark Igniter for Maxon Kinemax #6 - G
1	I1-RSN	Ignition Terminal, Ring
1	I1-SSN	Ignition Terminal, Snap Spring
1	I1-02-2046	Ignition Boot Protector
1	DC2500-CE-1A00-200-00000-00-0	Temperature Controller, Honeywell
1	F8-122	Dilution Air Filter Element
1	F8-121	Combustion Air filter Element
1	M7284C1000	Modulating Motor, Honeywell w/limit switches
2	14264	Linkage Swivel for 5/16” Rod – HW Mod Motors
2	IEC-000-0103-8	Flame Arrestor Gasket
1	46015-8	High Gas Pressure Switch, Dungs 40-100” w.c.
1	46016-6	Low Gas Pressure Switch, Dungs 12-60” w.c.
1	Cal Gas – Zero Air	221L Cylinder of Zero Air–LEL Calibration
1	221L-176-0.6	221l Cylinder of 0.6% Propane in air –LEL Calibration
1	70-1.0 w/adaptor	Cal Gas Regulator, Fixed 1 LPM delivery
1	MSA 809086	Calibration Controller for MSA LEL Sensors

Oxidizer Mode Change Instructions

!! DANGER!

Improper set-up could result in personal injury or permanent equipment damage. It is strongly recommended that Intellishare Environmental, Inc. be contracted to perform system mode changes. It is extremely critical that all temperature settings, inserts, damper positions, airflow and gas settings are correct.

Catalytic Mode to Thermal Mode

	Temperature Controllers
1.	Main power to the oxidizer control panel is required to be on for controller adjustment.
2.	Adjust the **High Limit Temperature Controller**. Press the up arrow key until lower display reads 1500 degree F. (HX Mode) 1600 degree F. (By-pass Mode)
3.	On the **Inlet Temperature Controller**, press set up button until CONTRL is displayed. Press the function button until SP Hi is displayed. Use the up arrow display until 1600 is displayed.
4.	Press set up button until ALARMS is displayed. Press the function button until A1S1VA is displayed. Used the up arrow display button until 1500 degree F. (HX Mode) 1600 degree F. (By-pass Mode) is displayed.
5.	Press the set up button until ALARMS is displayed. Press the function button until A2S1VA appears. Use the up arrow display button until 1350 is displayed.
6.	Press the display button until SP appears in the lower display. Use the up arrow display key until 1400 is displayed. Press display again and the inlet temperature control set points are complete.
7.	On the **Outlet Temperature Controller**, press the set up button until CONTRL is displayed. Press the function button until SP Hi appears. Use the up arrow display button until 1600 is displayed.
8.	Press the display button until SP appears in the lower display. Use the up arrow display key until 1450 is displayed. Press display again and the outlet temperature control set points are complete.
9.	Adjust LEL if equipped to Alarm 3/40% – Hand Held Programmer Required
10.	Adjust or change primary and/or secondary regulator springs to achieve proper burner output. Micro Ratio valve may also need adjustment – consult Intellishare Environmental for specific information
11.	Press the Start button on the Operator Interface Panel to start the Oxidizer.
	Catalyst Mechanical Removal
	Note: When reinstalling components, make sure flange gaskets are in good condition and proper position. Replace gaskets where necessary. Once the catalyst is removed note any unusual wear and/or discoloration.
1.	Refer to Install Mode Change drawing - Thermal Mode Heat Exchange Enabled or Thermal Mode Heat exchanger Bypass depending upon whether or not HX use is desired.

Thermal Mode to Catalytic Mode

	Controllers
1.	Main power to the oxidizer control panel is required to be on for controller adjustment.
2.	Adjust the **High Limit Temperature Controller**. Press the up arrow key until lower display reads 1100 degree F. (HX Mode) 1100 degree F. (By-pass Mode)
3.	On the **Inlet Temperature Controller**, press set up button until CONTRL is displayed. Press the function button until SP Hi is displayed. Use the down arrow display until 1100 is displayed.
4.	Press set up button until ALARMS is displayed. Press the function button until A1S1VA is displayed. Use the down arrow display button until 900 is displayed.
5.	Press the set up button until ALARMS is displayed. Press the function button until A2S1VA appears. Use the down arrow display button until 550 is displayed.
6.	Press the display button until SP appears in the lower display. Use the down arrow display key until 600 is displayed. Press display again and the inlet temperature control settings are complete.
7.	On the **Outlet Temperature Controller**, press the set up button until CONTRL is displayed. Press the function button until SP Hi appears. Use the up arrow display button until 1100 is displayed.
8.	Press the display button until SP appears in the lower display. Use the down arrow display key until 950 is displayed. Press display again and the outlet temperature control set points are complete.
9.	Adjust LEL if equipped to Alarm 3/25% – Hand Held Programmer Required
10.	Adjust or change primary and/or secondary regulator springs to achieve proper burner output. Micro Ratio valve may also need adjustment – consult Intellishare Environmental for specific information
11.	Press the Start button on the Operator Interface Panel to start the Oxidizer.
	Catalyst Mechanical Installation
	Note: When reinstalling components, make sure flange gaskets are in good condition and proper position. Replace gaskets where necessary. Inspect the catalyst module and catalyst hold-down. The catalyst should be free of debris and the catalyst hold-down should be snug.
1.	Refer to Install Mode Change drawing - Catalytic Mode Heat Exchange Enabled

Safety Instructions for Equipment Operation and Maintenance

PLEASE READ THIS ENTIRE SECTION BEFORE ATTEMPTING TO OPERATE OR PERFORM WORK ON THIS EQUIPMENT. FOLLOW THE INSTRUCTIONS CAREFULLY AND COMPLETELY. SAFETY IS THE RESPONSIBILITY OF EVERYONE.

This section describes safety instructions and general precautions to be followed when operating this equipment. This section also contains precautionary information to be heeded when performing maintenance, repairs or testing on the equipment. The information is intended as a guide to safe operation and maintenance of your system. It does not supersede or replace either the provisions of a safety program or any specific safety procedures established by the equipment user. Intellishare Environmental, Inc. has endeavored to use reasonable care and good judgment in identifying the potential hazards associated with this equipment. It is not possible to anticipate and address every hazardous situation. Neither can it address specific situations that may be unique to the user of the equipment. *Planning, concern, common sense, maturity and the elimination of careless practices is necessary in any safety program.*

Only properly trained and authorized personnel should be allowed to work on or around this equipment. It is the responsibility of the equipment user to establish appropriate safety health practices and to determine the applicable or regulatory limitations prior to use. All personnel involved with or affected by this equipment should read and understand this document, and all pertaining user supplied safety documents. It is strongly recommended that a barrier be erected around the equipment to deter unauthorized entrance into the installation area.

At no time shall any of the equipment controls be modified, bypassed or rendered inoperative without prior authorization from an Intellishare Environmental representative. To do so may result in equipment damage, personal injury or death.

This equipment has been designed and manufactured for use in conjunction with specific user equipment. The operation of this equipment under conditions outside of the original design, or with equipment other than the original design may be extremely hazardous. At no time should this equipment be used for anything other than its original design specifications. This equipment has been designed to discontinue operation in the event of an unexpected malfunction. Do not attempt to re-start the equipment until the source of the malfunction has been identified and eliminated.

Hazardous Communication

Industry throughout the United States has established a uniform method for identifying the potential severity of a hazard. This method has also been further documented in various publications including those published by the American National Standards Institute. Intellishare Environmental, Inc. has used reasonable care to assure that the hazards included in this section conform to these established standards. The hazard levels are as follows:

(DANGER) An immediate hazard that will result in severe personal injury or death.

(WARNING) A hazard or unsafe practices which could result in severe personal injury or death.

(CAUTION) A hazard or unsafe practices which could result in minor personal injury, product damage, or property damage.

General Information (WARNING) Chemical Reactions

There are a number of hazards that inevitably occur due to the physical and chemical nature of the equipment. This equipment contains materials and chemical substances that may have adverse impact on the human body. Personnel responsible for the erection, maintenance and/or operation of this equipment should be knowledgeable and exercise care to provide protection against hazards to all affected personnel as well as equipment.

Electrical (DANGER) Electrocution

High voltage is present at many points of this equipment. Although every precaution has been taken to insure the safety of the operator, coming into contact with this voltage may result in serious injury or death. Only trained and qualified electricians should be allowed to work on the electrical components of this equipment. Observe all OSHA Lockout/Tagout requirements pertaining to this type of equipment to prevent accidental electrocution. The electrical power should be disconnected and locked out before entering into any electrical compartment. The equipment should be properly grounded and all interconnecting wiring should be installed in accordance with local, state and NEC codes.

Common system voltages include:

Ignition Circuits	6000+ Volts AC (Design Specific)
Electric Heater Circuits	208 / 240 / 480 Volts AC (Design Specific)
Motor Circuits	208 / 240 / 480 Volts AC (Design Specific)
Control Circuits	120 Volts AC (Design Specific)

Gas Train (DANGER) Fire or Explosion

Many of the equipment designs incorporate a natural gas or propane fuel train and burner to process contaminants. Unless authorized by a representative of Intellishare Environmental, do not attempt to modify or adjust components on the gas train. Personnel affected by this equipment should be trained on how to shut off the gas supply to the equipment in the event of a gas leak. Only trained and qualified personnel should be allowed to work on the gas train. Observe all OSHA Lockout/Tagout requirements pertaining to this type of equipment to prevent accidental releases of combustible gases. Observe all NFPA guidelines during installation, troubleshooting, and maintenance procedures performed on the equipment. Periodic inspection should be performed along with leak detection and indicator accuracy verification. System shutdown devices are incorporated into the gas train and these devices should be inspected periodically for proper operation. No open flame or spark emitting devices should be allowed in the area of the gas train.

High Temperature (CAUTION) Heat and Burns

Many of the equipment designs operate in a wide range of temperatures between 400° F and 1600° F. Although the equipment is insulated to reduce external surface temperatures, personnel should exercise caution when working on or around the equipment. Contact with hot surfaces may result in burn injuries. It is strongly recommended that the equipment be shut down and allowed to cool before any work is performed in this area.

Rotating Equipment (WARNING) Caught In or Struck By

Many of the equipment designs incorporate rotating components (i.e. motor drives, blowers, fans, etc...) into the design process. Use extreme caution when working on or around these components. Do not wear loose clothing or jewelry, and keep long hair protected. Observe all OSHA Lockout/Tagout requirements pertaining to this type of equipment to prevent accidental or automatic controlled starts. Remove all tools, electrical cords, and debris from the area before attempting to restart the equipment. Never attempt to repair or adjust rotating equipment while it is running. Always insure that all equipment guards are installed before attempting to start rotating equipment.

Confined Space (DANGER) Suffocation or Asphyxiation

The interior chambers of this equipment are confined space areas that may not contain enough oxygen to support human life. **Suffocation is possible.** According to OSHA guidelines, the minimum safe environment must contain at least 19.5 % oxygen for personnel to work in a confined space. The oxygen content in a normal environment is approximately 21%. In addition to the verification of oxygen content, it is extremely important to test the atmosphere within the confined space for hazardous chemical concentrations. **Asphyxiation is possible.** The atmosphere within the confined space must be checked for site-specific chemicals before entry is allowed. Observe all OSHA requirements pertaining to confined space before allowing personnel to enter these areas. **Do not enter into any confined space area until the atmosphere in that space has been tested by qualified personnel with the appropriate testing equipment.**

Slippery / Elevated Surfaces (CAUTION) Slips, Trips, or Falls

When working at elevations, observe the OSHA requirements for use of ladders, man-lifts, and safety restraint devices. Always be aware of slippery surfaces that may be caused by rain, snow, or ice. Do not climb on system piping or components as equipment damage or personal injury may occur.

Safety Precautions

The Intellishare Environmental, Inc. equipment and systems have been designed in such a manner as to present a minimum of safety hazards. It is, however, incumbent upon operating and maintenance personnel to follow safety procedures when in the area of the system and controls.

!! DANGER!

Never introduce concentrations exceeding 25% of the lower explosive limit (LEL) to a Catalytic Oxidizer.

Never introduce concentrations exceeding 50% of the LEL to a thermal oxidizer.

Operation >25% of the LEL must be accompanied by an LEL sensor alarm in accordance with NFPA Standards.

Potential Hazards

- Only competent, safety conscious personnel should have access to the area.
- Only qualified personnel should work on the electrical panel and controls. Follow all electrical and safety codes.
- Individuals working with this system must be familiar with the equipment and hazards involved and be fully trained in the operation of the equipment.
- All areas around the system must be restricted to authorized personnel only.
- Personnel in the area must wear safety equipment in compliance with plant and/or site safety standards.
- The system must be “shut down” and “locked out” before working on any part of the system. Possible injury to personnel could otherwise occur.
- All safety guards and devices must be correctly installed and in place before operating equipment.
- Do not touch the flame rod or spark ignitor, or ground the electrode while the oxidizer is operating. This is an electrical shock hazard.
- Check for gas leaks every week in the gas train and main gas line. A gas leak could produce a dangerous explosive condition. Repair all gas leaks immediately.
- Do not operate the oxidizer with the purge cycle shortened or bypassed. The purge cycle is factory-set for safe operation and must not be changed.
- Do not change damper or valve settings without first consulting Intellishare Environmental, Inc.

- Any fires that occur within the oxidizer and its related equipment should not be extinguished with water. Either a build-up of flammable substances or a faulty electrical circuit would most likely cause these fires. The proper fire fighting equipment must be available and operators must be trained in the use of the fire fighting equipment.

TERMS & WARRANTY

Standard Terms & Conditions

Prices

Prices are quoted in U.S. dollars and may be accepted only within 90 days from date of quotation by Intellishare Environmental, Inc. Quotations do not include taxes unless otherwise noted. Orders accepted prior to any price increase will be invoiced as quoted provided Intellishare Environmental is allowed to ship under its normal delivery schedule. Intellishare Environmental may adjust prices on any order changed by the Purchaser after acceptance of the order by Intellishare Environmental.

Cancellations

Orders cancelled by the Purchaser are subject to a cancellation charge which may include engineering service, work in progress, special purchased parts changes and other similar charges.

Shipping Schedules

Intellishare Environmental, Inc. will not be liable for any loss or damage from delays in shipping beyond Intellishare Environmental's reasonable control. Shipments delayed at Purchaser's request will be invoiced and dated on the day shipment is ready and a 1% per month service charge will be added. Intellishare Environmental reserves the right to make partial shipments and to invoice pro rata upon such shipments.

Electrical Equipment and Installation

Electrical equipment includes only those electrical components referred to in the quotation. Changes to electrical equipment to comply with any local, state, provincial or national regulations are the Purchaser's responsibility unless Intellishare Environmental specifically agrees to meet said regulations.

Acceptance and Testing of Equipment

Purchaser will upon delivery inspect and test the equipment and notify Intellishare Environmental in writing within 30 days of installation of all defects discovered, including failure of the equipment to meet quoted performance standards. Failure to give such notice constitutes irrevocable acceptance of the equipment, the equipment will be deemed to conform to the terms of this Agreement and Purchaser will be bound to pay for the equipment. Upon notification of a defect as above provided, Intellishare Environmental will repair the equipment and correct the system's performance.

Risk of Loss

Quotations are F.O.B., place of shipment, unless otherwise noted. The risk of loss of the equipment will pass to Purchaser upon Intellishare Environmental's delivery of the equipment to a carrier. Claims for damage in shipment must be filed by Purchaser with the carrier.

Limitation of Liability

In no event will Intellishare Environmental, its subcontractors or representatives, be held responsible, or liable for any claim, whether in warranty, contract, tort or strict liability for any special, indirect, incidental or consequential damages resulting from

the purchase of equipment (including but not limited to incidental or consequential damages for labor, lost profits, lost sales, injury to person or to property or any other incidental loss or damages).

Purchaser agrees that Purchaser's exclusive remedy and Intellishare Environmental's sole liability on any such claim will be limited to reimbursement from Intellishare Environmental of the purchase price actually received by Intellishare Environmental from Purchaser for the equipment in question.

Security Interest

Purchaser grants Intellishare Environmental a security interest in the equipment to secure payment of the balance due hereunder. Purchaser authorizes Intellishare Environmental to file this Agreement as a Financing Statement or to sign on behalf of Purchaser and file any other Financing Statements with respect to the equipment in any place Intellishare Environmental deems necessary.

Attorney's Fees

Purchaser will be liable for all reasonable expenses and attorney's fees incurred by Intellishare Environmental in enforcing its rights and remedies under this Agreement.

Ordinances

Any and all required licenses, certificates and operating permits will be the sole responsibility of the Purchaser unless otherwise specified by Intellishare Environmental, Inc.

Indemnification

Purchaser shall indemnify and save Intellishare Environmental, Inc. harmless against all losses or claims for bodily injury (including death) and property damage relating to the equipment or sustained by Seller while Seller or Seller's agents, employees or representatives are at a location selected by Purchaser except Purchaser shall not indemnify Seller if said damages are the result of Seller's willful and wanton acts.

Miscellaneous

The terms and conditions contained herein and any other terms and conditions stated in Intellishare Environmental's proposal or specifications attached hereto will constitute the entire agreement between Intellishare Environmental and Purchaser. The terms and conditions stated herein are applicable to all orders accepted by Intellishare Environmental, Inc. unless otherwise specifically agreed to by Intellishare Environmental in writing. Purchaser will be deemed to have assented to all such terms if any part of the described equipment is to be accepted. If Purchaser finds any terms not acceptable, Purchaser must so notify Intellishare Environmental within 10 days. Any additional or different terms contained in Purchaser's order to response hereto will be deemed objected to by Intellishare Environmental and will be of no effect. This proposal and its acceptance will be governed in all respects by the laws of Wisconsin. In the event of a breach, both parties agree that any suit will be brought in the jurisdiction of Wisconsin.

Warranty

Scope and Duration

Intellishare Environmental warrants to buyer that the products to be delivered will (a) be free from defects in material and manufacturing workmanship (b) conform to manufacturer's applicable product descriptions attached to Seller's quotation. If no product descriptions or specifications are attached to the quotation, manufacturer's specification in effect on the date of shipment will apply.

For oxidizers utilizing a catalyst, Intellishare Environmental guarantees the conversion efficiency of the system as long as the catalyst bed temperatures are kept within a specified range and certain neutralizers are kept out of the air stream. Please see accompanying list of catalyst poisons.

Purchaser is responsible to limit the introduction of hydrocarbon vapors, which exceed the LEL rating of the system as specified by the National Fire Protection Association (NFPA) & Intellishare Environmental. Detonation and damage as a result of LEL excess is solely the purchaser's responsibility.

Intellishare Environmental guarantees the conversion efficiency of the system or an outlet concentration of 20 ppmv as C1, whichever is less stringent.

The product warranties are for a period of 12 months from the date of shipment.

Intellishare Environmental shall rely on process and chemical information provided by Purchaser or its agents and shall not be liable for inaccurate data, undisclosed or unknown process or chemical materials.

Warranty Exclusions

Warranty coverage does not include (a) freight, labor, travel or living expenses associated with parts replacement (b) normal maintenance items such as lubrication, fan belts and cleaning of the equipment.

In the event the customer, or any installation contractor employed by the customer, contracts outside Intellishare Environmental for installation work or erection of quoted equipment, the customer will assume full responsibility for workmanship resulting from said contract.

Catalyst Deactivation & Poisoning Agents

The following partial list of poisoning agents and inhibitors has been found to have a detrimental effect on the activity of the noble metal catalyst. Catalyst exposure to these substances must be avoided. The catalyst manufacturer's warranty applies to all claims.

Substance	**Effect**	**Remedial Action**
Coating Agents - rust - dirt - inorganic oxide	Covers catalyst active site.	Non-phosphate detergent washing usually effective for removal. Factory reactivation or replacement usually required. Non-phosphate detergent washing may be effective.
Glass Forming Coating Agents - organic silicates (esters) - silicones - phosphorus containing materials	Covers catalyst active site.	Factory reactivation or replacement usually required. Non-phosphate detergent washing may be effective.
Poisons – Heavy Metal Complexes - Mercury - Lead - Zinc - Tin - Arsenic - Antimony, etc.	Permanent catalyst deactivation	Factory reactivation or replacement required.
Sulfides	Permanent catalyst deactivation	Depending on exposure and sulfide concentration, factory reactivation, non-phosphate detergent washing or replacement is required.
Halogens - fluorine - chlorine - bromine - iodine - halogenated hydrocarbons	Covers active site-resulting in temporary or permanent deactivation.	Activity usually returns if exposed to low concentrations and upon removal of halogen source. Prolonged exposure with water (or protons) can corrode, dissolve the catalyst substrate and require repair or replacement.
Note: Does not apply to HD or t-HD catalysts which have been specifically designed to be tolerant of and/or destroy halogenated hydrocarbons (excluding fluorine).		
Organic Droplets and Aerosols	Covers active site. Possible cause of catalyst hot spot.	Such materials may carburize on the catalyst forming a refractory material or become a hot spot source causing substrate deterioration. Factory reactivation or replacement is required.

Oxidation Catalyst Warranty & Limitation of Remedy & Liability

1. Johnson Matthey Environmental Products (JMEP), strictly for the period stated, warrants subject to all terms and conditions herein, that the catalyst furnished hereunder, when operated in accordance with the inlet conditions stated in attached TABLE I, shall provide minimum contaminant removal/destruction efficiency or not exceed maximum allowable unconverted contaminant concentration in the stack gas, as presented in TABLE I, whichever is less stringent. Any other performance curves submitted are for the Buyer's convenience and the performance indicated thereon is not offered by JMEP, nor to be construed by the Buyer as a proposal or contract obligation. The term "contaminant removal/destruction efficiency" shall be defined as that percentage of incoming hydrocarbon content oxidized to form carbon dioxide. Performance tests, if required, conducted at Purchaser's expense. Catalyst shall be considered accepted if tests show performance warranty has been fulfilled.

   - In the event the catalyst fails to perform as described in Paragraph 1 above, JMEP shall have the option of either; a) replacing FOB shipping point, the non-performing catalyst. B) providing FOB shipping point, additional catalyst. C) Make whatever repairs or modifications to the catalyst configuration it considers necessary to enable the catalyst to meet guarantees. The cost of providing such modifications, including materials, labor and engineering shall be borne by JMEP. Costs of installing modifications shall be borne by Buyer.

     In the event JMEP chooses to provide a replacement charge of catalyst, Buyer agrees to provide field installation for the new catalyst, return the original catalyst to JMEP and accept replacement catalyst as fulfillment of all obligations borne by JMEP and agrees to make no further demands.

     For the avoidance of doubt, the election by JMI of any of the above remedies shall not extend the warranty period.

3. The maximum liability of JMEP under this warranty shall not exceed the catalyst purchase price. JMEP, in no event shall be liable for production losses or indirect or consequential damages resulting from failure of catalyst to meet warranty.

4. The warranty period is Twelve (12) calendar months and shall commence from the date of initial start-up or from a date ninety (90) days after shipment, whichever date occurs first. Buyer agrees to promptly notify JMEP, in writing, as to the date of initial start-up.

5. a) The following contaminants are known catalyst deactivators and contribute to shortened catalyst life; heavy and base metals such as lead, mercury, arsenic, antimony, zinc, copper, tin, iron, nickel and chrome, sulfur and phosphorous. Hence the total content of these element(s) analyzed on the catalyst by quantitative methods must not exceed 10 grams/ft3 with the exceptions shown below in 5©. Contaminants in excess of these amounts shall void the warranty unless failure is due solely to defects in the equipment.

   b) Exposure to excessive temperatures significantly reduces catalyst life. Hence, at no time shall the catalyst outlet temperature be permitted to exceed 1250 F. Normal continuous operating temperature shall not exceed 1200 F for more than 15 minutes during any 24 hour period. Exposure to temperatures exceeding these values will automatically void the warranty. It is for this reason that the use of a high temperature alarm set for 1200 F and shutdown system set for 1250 F along with a temperature recorder is recommended.

   c) Chlorine containing compounds in the exhaust must not exceed 10 ppm. Silicon and fluorine containing compounds must be absent. Contaminants in excess of these amounts shall void the warranty.

   d) Periodic cleaning of particulates, etc., may be found necessary to maintain catalyst activity. If required, this shall not be construed as evidence of catalyst non-performance. Buyer shall conduct catalyst cleaning in strict accordance with JMEP procedure during warranty period.

6. Unit must be designed such that 1) no bypass around catalyst blocks or catalyst bed can occur, 2) blocks are oriented according to JM's recommendations, 3) flow is evenly distributed across catalyst bed. Failure to do so shall void the warranty.

7. Except as stated above, in the equipment warranty, and in the standard terms and conditions of sale, JMEP makes no other warranties, expressed or implied, including the implied warranties of merchantability and fitness for any particular purpose.

   - The foregoing is Seller's only obligation and Buyer's exclusive remedy for breach of warranty and, except for gross negligence, willful misconduct and remedies permitted under the performance, inspection and acceptance and the patent clauses hereof, the foregoing is Buyer's exclusive remedy against Seller for all claims arising hereunder or relating hereto whether such claims are based on breach of contract, (or) (including negligence and strict liability) or other theories.

     Buyer's failure to submit a claim as provided above shall specifically waive all claims based on latent defects. In no event shall Buyer be entitled to incidental or consequential damages. Any action arising hereunder or relating hereto whether based on breach of contract (or) (including negligence and strict liability) or other theories, must be commenced within one (1) year after the cause of action accrues or it shall be barred.

MECHANICAL DRAWINGS

Process & Instrumentation Diagram (P&ID)

General Arrangement Drawing

Oxidizer Installation & Mode Change Drawings

LOGIC SEQUENCE

System Pre-Start –			
Step	**Display**	**Operator Action**	**Remarks**
1	No Message	Select Mode	Position air flow dampers to desired mode of operation. Refer to page 2-1 for temperature control set points.
1	No Message	Turn On Main Power	Once main power voltage and phase has been verified, engage power disconnect.
2	System Off Check E-Stop (Only when enabled)	Turn On Control Power & Pull E-Stop Switch Out. Press Reset (F4) to clear any alarms.	120VAC control power is applied to PLC outputs and other external devices. The following pre-start safe conditions must be met prior to the "System Ready to Start" state is achieved. -E-Stop -Control Power -Temperature Control Valve TCV-1, closed -Gas Train Blocking Valve, closed -Gas Pressure Switches satisfied -No General Alarms **Warning:** Prior to starting the oxidizer close all SVE well valves and fully open the SVE dilution valve. Confirm the SVE inlet dilution valve is full open. Failure to close the SVE wells can result in damage to equipment and can cause injury to personnel. **Warning:** High concentrations of hydrocarbons can cause detonation and damage to the equipment or injury to personnel. Only trained operators should be allowed to operate and adjust the system.

System Start-Up

Step	Display	Operator Action	Remarks
1	System Ready to Start	Push START Button (F1).	Operator may abort the start-up sequence by pressing the stop or reset on the operator display or the emergency stop button located on the exterior of the control panel. Automatic startup sequence is initiated. With no alarm condition present and all safe limits proven, the oxidizer fans are started.
2	Burner Enabled Flame Not Established	None. Automatic operation.	System purges for 30 seconds, controlled by flame safety programmer. The controls check to assure that; -System fan running contacts close -System air flow is proven -Gas pressure switches are satisfied -Catalyst dp is satisfied -Main fuel valve is proven closed -Main fuel blocking valve is proven closed -Temperature limits are satisfied Once air flow is proven and the purge timer has expired, the burner pilot gas valve is enabled and fuel is introduced to the pilot flame port. The burner ignition transformer is turned on and the spark igniter attempts to light the pilot flame. Once the burner pilot flame is established the spark ignition is disabled. The flame controller assures the flame stability as viewed from the burner control display 0-5VDC with 5 being the highest. Once the pilot flame UV signal is >1.25V for 10 seconds the main gas valves are opened and main gas supply is opened to the burner. Note: Verify air flow to the oxidizer is within maximum air flow requirements as viewed from the Operator Interface Terminal (OIT).
3	Burner On. Heating to Setpoint	None. Automatic	The firing rate valve modulates to drive and hold the oxidizer temperature to a field adjustable set point on the inlet temperature control device.

System Start-Up (Continued)

Step	Display	Operator Action	Remarks
4	Burner On. Soaking at Set Point	None Automatic	Once the minimum operating temperature is achieved on the inlet temperature controller (1350F Thermal)(550F Catalytic) a 120 second PLC timer is activated to allow the oxidizer to reach a steady state.

Putting the System On-Line

Step	Display	Operator Action	Remarks
1	Burner On System Inlet Open	None Automatic	Once the oxidizer automatic inlet damper is opened the oxidizer ready contacts to the SVE equipment is enabled. The customer running contact is proven closed and the dilution air damper control is enabled after a 15 second delay. Always open the manual dilution valve on the SVE and them slowly close over time. **Warning:** Open the SVE wells slowly. High concentrations can cause detonation and damage to the equipment or injury to personnel. Only trained operators should be allowed to operate and adjust the system.
2	Burner On System Inlet Open	None. Automatic operation.	The process inlet valve is fully open. The oxidizer is on-line.

System Shut-Down

1	Manual System Shut-down	Push SYSTEM STOP button (F2).	The oxidizer enters into the cool down mode. The cool down period is displayed on the operator interface. The burner is disabled and the oxidizer ready contacts are disabled.

System Stand-by (Disabled)			
1	Standby	Push Standby Button (F3)	Pressing the Standby button opens the automatic dilution valve. The oxidizer to system ready continues to be enabled and the SVE/AS alarm from others panel is ignored. Push Stand-by mode again to return to "Burner on System inlet open"

System Run Time			
Display	None	Push > Button on the operator display.	Press > to display system operating hours and other process data. To scroll down the process data press the > button a second time. A 20 second timer automatically resets screen.

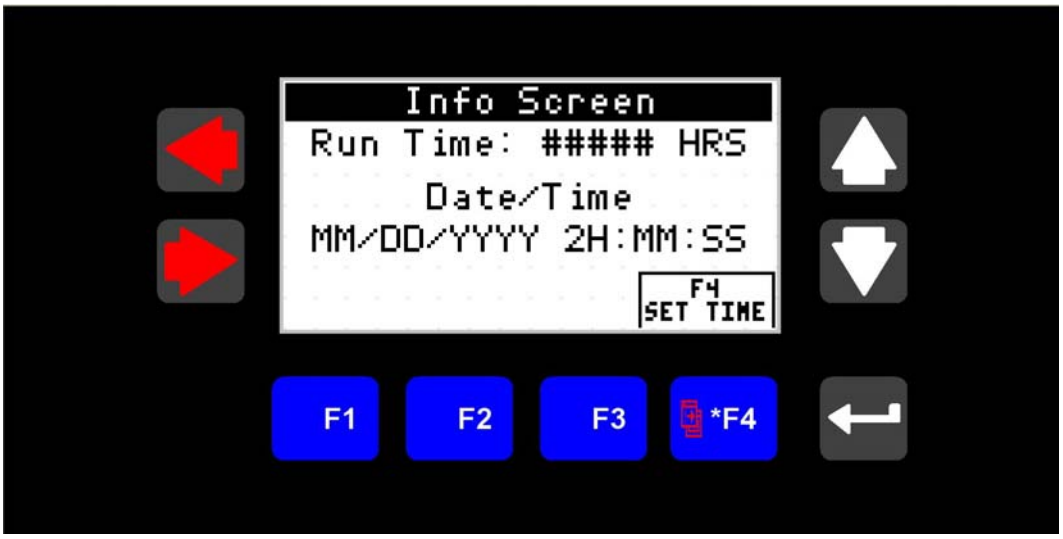

Alarm History			
Step	**Display**	**Operator Action**	**Remarks**
1	None.	Push Right Arrow button (>) Three times.	Press Right Arrow button to display system Alarm History(Figure 2) Screen display clears Alarm History after 10 seconds..

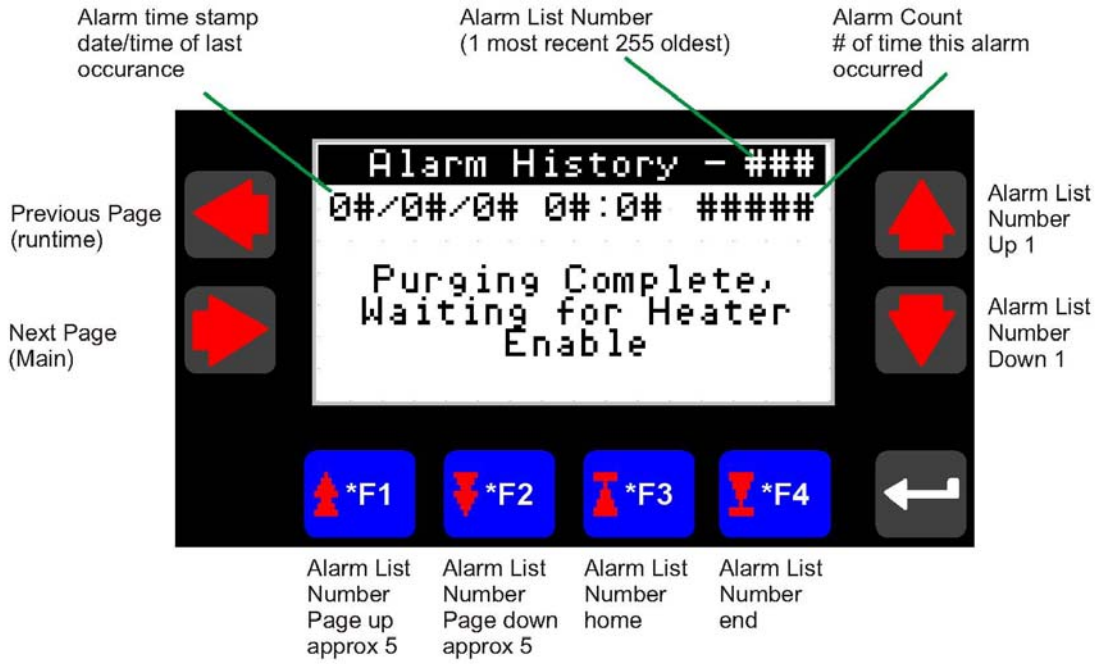

Alarm Conditions

Each of the following alarm conditions initiates 240 second cool-down. Exceptions are emergency stop and control power, which initiates a hard shutdown.

The alarm which first causes a shutdown is the one displayed. Subsequent faults are disregarded by the controls until the first alarm is cleared. Note: Some alarms may not be present in every system.

Display	Description	Operator Action
High L.E.L. After Correcting Fault, Press RESET.	The LEL monitor has detected an LEL in excess of setpoint in the process	Check for: -Proper calibration of LEL sensor -Proper dilution operation.
High Inlet Temperature After Correcting Fault, Press RESET.	The inlet temperature has risen above the alarm setpoint. Excess temperature can damage or destroy the catalyst. It can also damage the reactor or scrubber if equipped.	Check for: - Malfunctioning firing rate actuator, loose or broken linkage. - Proper setup, function of inlet temperature control loop. -Proper air flow rate
High Outlet Temperature After Correcting Fault, Press RESET.	The combustion chamber or catalyst outlet temperature has risen above the alarm setpoint. Excess temperature can damage or destroy the catalyst. It can also damage the reactor or scrubber.	Check for: - Malfunctioning dilution air actuator, loose or broken linkage. - Proper setup, function of outlet temperature control loop. - High solvent loading in process air stream.
System Operating Temperature Lost, Press RESET.	Once the system operating temperature is reached a 10 minute timer is enabled to allow the system to recover and reach operating temperature.	Check for: -Low inlet gas pressure. -Proper air flow rate. -Malfunctioning firing rate actuator, loose or broken linkage.
System Ready Temperature Not Reach, Press RESET.	Once the system is enabled it has 60 minutes to reach operating temperature.	Check for: Low inlet gas pressure. -Proper air flow rate. -Malfunctioning firing rate actuator or broken linkage.

Alarm Conditions (continued)

Display	**Description**	**Operator Action**
System or Combustion Air Blower is not in Automatic Position	Operator is required to place these switches in the (A) auto position prior to enabling the system.	Check for: -Proper switch position.
High Water Level. After Correcting Fault, Press RESET.	High water level in the knock-out pot.	Check for: -Drain the knock-out pot.
System Blower Motor Off. After Correcting Fault, Press RESET.	The oxidizer blower motor starter has failed to energize on startup or has opened while the motor was running.	Check for: - Contactor failure. -Motor overload. - Fan obstruction. - Seized fan or motor bearings.
System Air Pressure Switch Not Closed. After Correcting Fault, Press RESET.	The oxidizer air proving switch has failed to close on startup or has opened after airflow was proven.	Check for: - Airflow restriction, such as a closed damper or debris. - Plugged airflow sensing tubing. - System fan malfunction.
Combustion Blower Air Switch Not Closed. After Correcting Fault, Press RESET.	The combustion blower air proving switch has failed to close on startup or has opened after airflow was proven.	Check for: - Airflow restriction, such as a closed damper or debris. - Plugged airflow sensing tubing. - System fan malfunction.
Combustion Blower Motor Off After Correcting Fault, Press RESET.	The combustion blower motor starter/overload has failed to energize on startup or has opened while the motor was running.	Check for: - Contactor failure. -Motor overload. - Fan obstruction. - Seized fan or motor bearings
Catalyst Differential Pressure Switch not Closed. After Correcting Fault, Press RESET.	The differential pressure across the catalyst has risen above the set-point of the proving switch.	Check for: - Excess airflow through the oxidizer. - Catalyst fouling. - Plugged airflow sensing tubing.

Alarm Conditions (continued)

Display	Description	Operator Action
Flame Failure. After Correcting Fault, Press RESET.	The Honeywell flame safety programmer (FSG) has detected a fault condition. Requires manual reset of FSG located on control panel interior.	Check for: -UV Scanner operating properly. -Improper gas pressure -Malfunctioning spark igniter
Low Gas Pressure. After Correcting Fault, Press RESET.	Low inlet gas pressure has been detected.	Check for: -Gas supply valves closed. -Improper switch setting. -Faulty main gas regulator.
High Gas Pressure. After Correcting Fault, Press RESET.	High gas pressure has been detected.	Check for: -Gas supply valves closed. -Faulty main gas regulator. -Improper switch setting.
Dilution Valve Not Open. After Correcting Fault, Press RESET.	Dilution Valve has not been proven open.	Check for: -dilution valve limit switch adjustment.
System Inlet Valve Not Closed. After Correcting Fault, Press RESET.	Inlet Valve has not been proven closed.	Check for: -inlet damper limit switch adjustment.
Power Failure. After Correcting Fault, Press RESET.	Power supply has been interrupted	Check for: -Tripped breaker(s) -Main power switch turned off
System Ready Temperature not Reached After Correcting Fault, Press RESET.	System did not reach operating temperature in allotted time	Check for: -Burner output -Air flow is correct -Ready temp setting is correct
Main Gas Valve Open After Correcting Fault, Press RESET.	Burner firing rate valve is not proven closed	Check for: -Maxon Micro Ratio valve is in closed position -Valve/ actuator linkage is intact -HW limit switch is adjusted Properly
Chart Recorder No Data After Correcting Fault, Press RESET.	The Chart recorder SD card has been removed, or the recorder has lost power	Check for: -SD card is installed properly in recorder -verify recorder power supply

Alarm Conditions (continued)

Display	**Description**	**Operator Action**
SVE/AS Fault After Correcting Fault, Press RESET.	Once the oxidizer controls enable the SVE/AS system, a 60 min delay timer is started. This alarm will be enabled if the running contact from others system is not realized prior to timeout.	Check for: -Signal from SVE/AS or other control panel - Check SVE/AS control panel for indicated fault(s)
Aux Interrupt Fault After Correcting Fault, Press RESET.	Auxiliary interlock contacts are provided for customer use if desired.	Check for: -Panel faults on others panel -Jumper is in place if these contacts are not being used
Flame Arrestor Outlet High Temp. After Correcting Fault, Press RESET.	The flame arrestor outlet temperature has exceed the setpoint	Check for: -Proper setup, function of F.A. outlet temperature control loop. -SVE discharge is within limits
VFD Fault After Correcting Fault, Press RESET.	The System fan VFD has indicated a fault	Check for: -fault message on VFD - Fan obstruction. - Seized fan or motor bearings

ELECTRICAL DRAWINGS

CONTROLLER SET POINTS

Inlet Temperature Control

Group Prompt	Function Prompt	Value or Selection	Factory Setting
TUNING	PB or GAIN	PB 15	1.0
	RATE T	0.00	0.00
	I MIN or I RPM	1.0	1.0
	MANRST	Not Used	1.0
	PB2 or GAIN 2	Not Used	0.0
	RATE2T	Not Used	0.00
	I2 MIN or I2 RPM	Not Used	1.0
	CYCT1 or CT1	Not Used	20
	X3	Not Used	20
	CYC2T2 or CT2	Not Used	20
	X3	Not Used	20
	SECUR	Not Used	0
	LOCK	NONE	NONE
	AUTOMA	ENAB	ENAB
	A TUNE	ENAB	ENAB
	RN HLD	ENAB	ENAB
	SP SEL	ENAB	ENAB

Group Prompt	Function Prompt	Value or Selection	Factory Setting
SPRAMP	SPRAMP	DIS	DIS
	TI MIN	Not Used	3
	FINLSP	Not Used	1000
	SPRATE	ENAB	DIS
	EUHRUP	8400	0
	EUHRDN	0	0
	SPPROG	DIS	DIS

Group Prompt	Function Prompt	Value or Selection	Factory Setting
ATUNE	FUZZY	ENAB	DIS
	TUNE	DIS	TUNE
	DUPLEX	Not Used	MAN
	AT ERR	Not Used	---

Group Prompt	Function Prompt	Value or Selection	Factory Setting
OUTLAG	OUTLAG	CUR	(MOXL)
	4-20RG	Not Used	100
	CRANGE	4-20	4-20
	RLY TY	Not Used	MECH
	MTRT1	Not Used	5

Group Prompt	Function Prompt	Value or Selection	Factory Setting
INPUT1	IN1TYP	KH	KH
	XMITR1	Not Used	LIN
	IN1 HI	2400	2400
	IN1 LO	0	0
	RATIO1	1.0	1.00
	BIAS1	0.0	0.0
	FILTR1	5	1.0
	BRNOUT	UP	UP
	EMIS	Not Used	1.0

Group Prompt	Function Prompt	Value or Selection	Factory Setting
INPUT2	IN2TYP	Not Used	1-5V
	LIN	Not Used	LIN
	IN2 HI	Not Used	2400
	IN2 LO	Not Used	0
	RATIO2	Not Used	1.00
	BIAS 2	Not Used	0.0
	FILTR2	Not Used	1.0

Inlet Temperature Control (continued)

Group Prompt	Function Prompt	Value or Selection	Factory Setting
CONTRL	PIDSET	ONE	ONE
	SW VAL	Not Used	0.00
	LSP'S	TWO	ONE
	RSPSRC	NONE	NONE
	SP TRK	NONE	NONE
	PWR UP	ALSP	AUTO
	PWROUT	LAST	FSAF
	SP Hi	1600	2400
	SP Lo	0	0
	ACTION	REV	REV
	OUT Hi	100	100
	OUT Lo	0	0
	D BAND	2.0	2.0
	HYST	0.5	0.5
	FAILSF	0	0.0
	FSMODE	LATCH	NOL
	PBorGN	PB	GAIN
	MINRPM	RPM	MIN

Group Prompt	Function Prompt	Value or Selection	Factory Setting
OPTION	AUXOUT	IN1	DIS
	ARANGE	4-20	4-20
	0 PCT	0	0
	100 PCT	2000	100
	DIG IN 1	SP2	NONE
	DIG1 COM	DIS	DIS
	DIG IN 2	NONE	NONE
	DIG2 COM	DIS	DIS

Group Prompt	Function Prompt	Value or Selection	Factory Setting
COM	ComADR	Not Used	Disable
	COMSTA	Not Used	0
	IRENAB	Not Used	Enable
	BAUD	Not Used	9600
	TX_DLY	Not Used	30
	WS_FLT	Not Used	FP_B
	SDENAB	Not Used	Enable
	SHDTIM	Not Used	0
	SDMODE	Not Used	Last
	SHD_SP	Not Used	LSP
	UNITS	Not Used	PCT
	CSRATO	Not Used	1.0
	CSP_BI	Not Used	0
	LOOPBACK	Not Used	Disable

Group Prompt	Function Prompt	Value or Selection	Factory Setting
ALARMS	A1S1TY	IN1	NONE
	A1S1VA	1600	90
	A1S1HL	HIGH	HIGH
	A1S1EV	Not Used	BEGN
	A1S2TY	NONE	NONE
	A1S2VA	Not Used	90
	A1S2HL	Not Used	HIGH
	A1S2EV	Not Used	BEGN
	A2S1TY	IN1	NONE
	A2S1VA	1350	90
	A2S1HL	HIGH	HIGH
	A2S1EV	Not Used	BEGN
	A2S2TY	NONE	NONE
	A2S2VA	Not Used	90
	A2S2HL	Not Used	HIGH
	A2S2EV	Not Used	BEGN
	ALHYST	0.1	0.0
	ALARM1	NOL	NOL
	BLOCK	DIS	DIS
	DIAGL	DIS	DIS

Inlet Temperature Control (continued)

Group Prompt	Function Prompt	Value or Selection	Factory Setting
DISPLY	DECMAL	NONE	NONE
	UNITS	F	F
	FREQ	60	60
	LDSPLY	ENABLE	ENABLE
	DISPLY	1400	SP
	2nd SP	70	2L
	LNGUAG	ENGL	ENGL

Notes:

1) Controller should be set to the automatic position. To change between the manual and automatic position, depress the M-A/Reset Button and observe the M or A indicated on the right middle area of the screen.

2) Enter in the Set Point temperature by pushing the Lower Display button until SP appears in lower left corner. SP should read 1400. 2nd Set Point (2L) should read 70.

3) Read Status: Skip

4) Program control setup before tuning setup.

Outlet Temperature Control

Group Prompt	Function Prompt	Value or Selection	Factory Setting
TUNING	PB or GAIN	PB 15	1.0
	RATE T	0.00	0.00
	I MIN or I RPM	1.0	1.0
	MANRST	Not Used	1.0
	PB2 or GAIN 2	Not Used	0.0
	RATE2T	Not Used	0.00
	I2 MIN or I2 RPM	Not Used	1.0
	CYCT1 or CT1	Not Used	20
	X3	Not Used	20
	CYC2T2 or CT2	Not Used	20
	X3	Not Used	20
	SECUR	Not Used	0
	LOCK	NONE	NONE
	AUTOMA	ENAB	ENAB
	A TUNE	DIS	ENAB
	RN HLD	DIS	ENAB
	SP SEL	DIS	ENAB

Group Prompt	Function Prompt	Value or Selection	Factory Setting
SPRAMP	SPRAMP	DIS	DIS
	TI MIN	Not Used	3
	FINLSP	Not Used	1000
	SPRATE	DIS	DIS
	EUHRUP	Not Used	0
	EUHRDN	Not Used	0
	SPPROG	Not Used	DIS

Group Prompt	Function Prompt	Value or Selection	Factory Setting
ATUNE	FUZZY	ENAB	DIS
	TUNE	DIS	TUNE
	DUPLEX	Not Used	MAN
	AT ERR	Not Used	---

Group Prompt	Function Prompt	Value or Selection	Factory Setting
ALGOR	CTRALG	PIDA	PIDA
	TIMER	DIS	DIS
	PERIOD	Not Used	0:01
	START	Not Used	KEY
	L DISP	Not Used	TREM
	RESET	Not Used	KEY
	INCRMT	Not Used	MIN

Group Prompt	Function Prompt	Value or Selection	Factory Setting
OUTLAG	OUTLAG	CUR	(MOXL)
	4-20RG	Not Used	100
	CRANGE	4-20	4-20
	RLY TY	MECH	MECH
	MTRT1	5	5

Group Prompt	Function Prompt	Value or Selection	Factory Setting
INPUT1	IN1TYP	KH	KH
	XMITR1	Not Used	LIN
	IN1 HI	2400	2400
	IN1 LO	0	0
	RATIO1	1.0	1.00
	BIAS1	0.0	0.0
	FILTR1	5	1.0
	BRNOUT	UP	UP
	EMIS	1.0	1.0

Group Prompt	Function Prompt	Value or Selection	Factory Setting
INPUT2	IN2TYP	Not Used	1-5V
	LIN	Not Used	LIN
	IN2 HI	Not Used	2400
	IN2 LO	Not Used	0
	RATIO2	Not Used	1.00
	BIAS 2	Not Used	0.0
	FILTR2	Not Used	1.0

Outlet Temperature Control
(continued)

Group Prompt	Function Prompt	Value or Selection	Factory Setting
CONTRL	PIDSET	ONE	ONE
	SW VAL	Not Used	0.00
	LSP'S	ONE	ONE
	RSPSRC	NONE	NONE
	SP TRK	NONE	NONE
	PWR UP	ALSP	AUTO
	PWROUT	LAST	FSAF
	SP Hi	1600	2400
	SP Lo	0	0
	ACTION	REV	REV
	OUT Hi	100	100
	OUT Lo	0	0
	D BAND	2.0	2.0
	HYST	0.5	0.5
	FAILSF	0.0	0.0
	FSMODE	LATCH	NOL
	PBorGN	PB	GAIN
	MINRPM	RPM	MIN

Group Prompt	Function Prompt	Value or Selection	Factory Setting
OPTION	AUXOUT	IN1	DIS
	ARANGE	4-20	4-20
	0 PCT	0	0
	100 PCT	1600 or 2000	100
	DIG IN 1	NONE	NONE
	DIG1 COM	DIS	DIS
	DIG IN 2	NONE	NONE
	DIG2 COM	DIS	DIS

Group Prompt	Function Prompt	Value or Selection	Factory Setting
COM	ComADR	Not Used	Disable
	COMSTA	Not Used	0
	IRENAB	Not Used	Enable
	BAUD	Not Used	9600
	TX_DLY	Not Used	30
	WS_FLT	Not Used	FP_B
	SDENAB	Not Used	Enable
	SHDTIM	Not Used	0
	SDMODE	Not Used	Last
	SHD_SP	Not Used	LSP
	UNITS	Not Used	PCT
	CSRATO	Not Used	1.0
	CSP_BI	Not Used	0
	LOOPBACK	Not Used	Disable

Group Prompt	Function Prompt	Value or Selection	Factory Setting
ALARMS	A1S1TY	NONE	NONE
	A1S1VA	Not Used	90
	A1S1HL	Not Used	HIGH
	A1S1EV	Not Used	BEGN
	A1S2TY	NONE	NONE
	A1S2VA	Not Used	90
	A1S2HL	Not Used	HIGH
	A1S2EV	Not Used	BEGN
	A2S1TY	NONE	NONE
	A2S1VA	Not Used	90
	A2S1HL	Not Used	HIGH
	A2S1EV	Not Used	BEGN
	A2S2TY	NONE	NONE
	A2S2VA	Not Used	90
	A2S2HL	Not Used	HIGH
	A2S2EV	Not Used	BEGN
	ALHYST	0.1	0.0
	ALARM1	NOL	NOL
	BLOCK	DIS	DIS
	DIAGL	DIS	DIS

Outlet Temperature Control
(continued)

Group Prompt	Function Prompt	Value or Selection	Factory Setting
DISPLY	DECMAL	NONE	NONE
	UNITS	F	F
	FREQ	60	60
	NOLDSP	DIS	DIS
	DISPLY	1450	SP
	LNGUAG	ENGL	ENGL

Notes:

1) Controller should be set to the automatic position. To change between the manual and automatic position, depress the M-A/Reset Button and observe the M or A indicated on the right middle area of the screen.

2) Enter in the Set Point temperature by pushing the Lower Display button until SP appears in lower left corner. SP should read 1450.

3) Read Status: Skip

4) Program control setup before tuning setup.

High Limit Temp Control

Group Prompt	Function Prompt	Value or Selection	Factory Setting
LOCK	SECUR	0	DIS
	LOCK	NONE	CAL

Group Prompt	Function Prompt	Value or Selection	Factory Setting
LIMIT	LOW or HIGH	HIGH	HIGH
	POWRUP	NORM	NORM
	SP MAX	1750	1000
	SP MIN	0	0
	DISPLY	PROC	PROC

Group Prompt	Function Prompt	Value or Selection	Factory Setting
INPUT1	IN1TYP	KH	KH
	XMITR1	_	LIN
	IN1 HI	2000	2400
	IN LO	0	1.00
	BIAS1	0	0.0
	FILTR1	5	1.0
	BRNOUT	UP	UP

Group Prompt	Function Prompt	Value or Selection	Factory Setting
OPTIONS	AUXOUT	PROC	DIS
	0 PCT	0	0
	100 PCT	2000	100
	CRANGE	4-20	4-20
	DIGIN 1	ENAB	DIS

Group Prompt	Function Prompt	Value or Selection	Factory Setting
COM	ComADR	3	3
	ComSTA	DIS	DIS
	IRENAB	ENAB	ENAB
	BAUD	19.2K	19.2K
	TX DLY	1	30
	WS FLT	Not Used	FP_B
	UNITS	PCT	PCT
	LOOPBK	Not Used	DIS

Group Prompt	Function Prompt	Value or Selection	Factory Setting
ALARMS	A1S1TY	NONE	NONE
	A1S1VA	Not Used	90
	A1S1HL	Not Used	HIGH
	A1S2TY	NONE	NONE
	A1S2VA	Not Used	90
	A1S2HL	Not Used	HIGH
	A2S1TY	NONE	NONE
	A2S1VA	Not Used	90
	A2S1HL	Not Used	HIGH
	A2S2TY	NONE	NONE
	A2S2VA	Not Used	90
	A2S2HL	Not Used	HIGH
	ALHYST	0.1	0.0
	ALARM1	NOL	NOL
	BLOCK	DIS	DIS
	DIAGL	DIS	DIS

High Limit Temperature Control
(continued)

Group Prompt	Function Prompt	Value or Selection	Factory Setting
DISPLY	DECMAL	NONE	NONE
	UNITS	F	F
	FREQ	60	60
	LWRDSP	ENAB	DIS
	SP	1650	0
	LNGUAG	ENGL	ENGL

Notes:

1. Controller should be set to the automatic position. To change between the manual and automatic position, depress the M-A/Reset Button and observe the M or A indicated on the right middle area of the screen.

2. Enter in the Set Point temperature by pushing the Lower Display button until SP appears in lower left corner. SP should read 1650.

3. Read Status: Skip

ABB Chart Recorder Settings

The ABB Chart Recorder may be programmed manually, or by loading the program from the removable SD Card used to store logged information.

The SD Card supplied with the unit has a copy of the program settings for the chart recorder that may be used to restore settings, or to program an identical replacement controller. No documentation for manually programmed settings is currently available.

An additional copy of these settings is stored on the CD ROM that accompanies this manual. The program is a configuration file located in a folder labeled "VRD". The program must reside in a folder Labeled VRD to be recognized by the chart recorder.

Follow instructions within the ABB Chart recorder manual, or contact Intellishare Environmental for assistance, if reprogramming is necessary.

ABB Software – Datamanager & Emulation

To install ABB emulation Software and Data Manager software - Follow steps 1, 2, & 3. This software is furnished by ABB and is supplied on the CD ROM that accompanies this manual.

To install ABB Data Manager software only - Follow step 3. (Data Manager takes stored data from the chart recorder data files, verifies file integrity, and converts to Excel format)

Step 1) Install WINDOWS CE 5.0 Emulation software - Open CE 5.0 emulator file and double click (Setup.exe). Follow setup instructions and accept the license agreement.

Step 2) Install SM500 Emulation Software - Open ABB Software double click on DM.EXE A full screen window will pop up. Select SM500F. Follow setup instructions and accept the license agreement.

Step 3) Install Data Manager software - Open ABB Software double click on DM.EXE A full screen window will pop up. Select Install Data Manager Software. Follow setup instructions and accept the license agreement.

View Instruction Manuals in folder - SM500 Documentation

See an excerpt describing the chart recorder from the SM 500 Manual on the following page.

General Information

When power is first applied to the instrument, its processor carries out a number of self-tests and displays the start-up screen.

At the end of the start-up sequence, the instrument displays the Operator View that was being displayed
when the instrument was powered down.

The instrument is operated via the Operator Keys located below the screen.

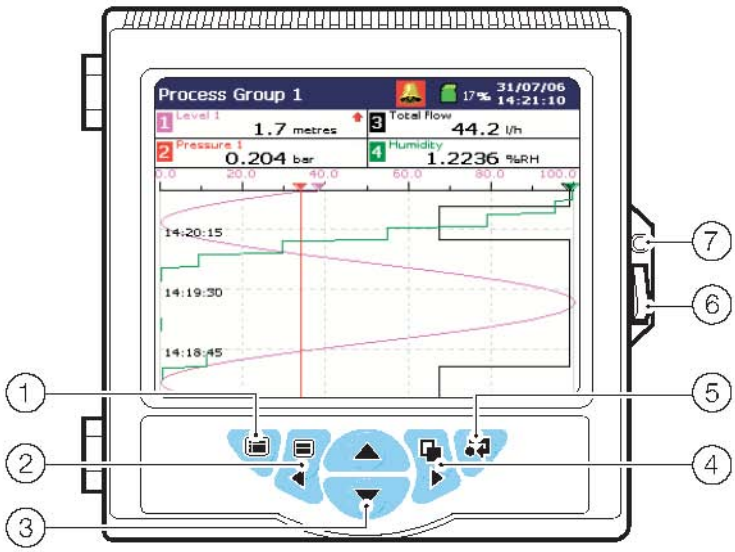

Fig. 4.1 Operator Keys and Door Features

Referring to Fig. 4.1, operator keys and door features are located as follows:

1. Menu Key – Displays or hides the context-sensitive operator menu associated with each view. Also cancels the menu without making a change or returns to the previous menu level.
2. Group Key – Selects a different process group or

   Left Key – Scroll left.
3. / Up/Down Keys – Highlights menu items and scrolls through previously recorded data.
4. View Key – Selects a different process view or log or

   Right Key – Scroll right.
5. Enter Key – Selects the highlighted menu item. If 'Screen Capture' is set to 'Enabled' during configuration and external archive media is inserted in the instrument, the operator can save a snapshot of any operator view to the external media if pressed when an operator menu is not displayed.
6. Door Release.
7. Door Lock (optional).

Programming SM500 using PC (Emulator)

This section details programming the instrument manually using the pc and copying the file to an SD card and loading into the instrument.

Start the SM500 Emulator from Windows/Start menu on the PC and perform the following steps on the menu:

Programming:

```
Emulator
MENU button
        Configuration
                Operator1
                        OK
                                Edit Current Config
                                        Menu button
                                                Common Config
                                                        Setup Tab
                                                        - number of groups = 1
                                                        - Instrument tag = Oxidizer
                                                        Screen Tab
                                                                screen saver wait  time = 2hrs
                                                        Time Tab
                                                                MM/DD/YY
                                                Group Configuration
                                                        Recording Tab
                                                                Tag = Oxidizer1
                                                        Chart Tab
                                                                Chart View Enable = horizontal
                                                                Screen interval = 25min
                                                        Archive Tab
                                                                Archive File enables: *.d, *.a
                                                                Filename Tag: Oxidizer Data
                                                                New file interval: monthly
                                                Channels 1.1-1.4
                                                        1.1
                                                                Analog I/P A1 Tab
                                                                Input type: T/C
                                                                Engineering Range: set to device
                                                                Tag: Inlet, Outlet, or LEL
                                                                Broken Sensor: upscale if T/C
                                                                Do the same for other channels
```

Menu out until it prompts to "Save Current Configuration".
* note where file is saved

You will be at the Emulator chart Screen (showing process values)

Menu Button
Logging
On-line (checked)
Recording Control
Primary

Copy File to SD Card

To copy the file to the SD card and move it to the instrument, perform the following:

Put the SD card into an SD slot on the PC or into and SD card reader attached to the PC

Navigate to the SD Card
- create folder "VRD"
- copy and paste .cfg file from the emulator to the SD card

Move file to the Chart Recorder

Place SD card in recorder
- go online or wait, it will automatically go online (Normal Operation)
- go to Logging and check offline (before dumping program off card onto Internal memory)
- go to MENU
  Configuration
  Operator
  OK
  Open a Configuration
  Choose External Storage
  Highlight desired program (on SD card) Press enter
  Press MENU button and select Save as Current Configuration

Retrieve Data from Recorder to Card

To retrieve data (stored on the SD card) from the instrument perform the following:

Menu button
Logging
Offline
-Verify the red light is of on the back of the recorder
Remove card

View Data Recorded to the SD Card

- Install SD card in computer
- start Microsoft Excel software (Datamanager software must be installed prior to this)
- select the "open CSV" file icon
- select "View Chart" icon

Process Flow Sensor Calculation Information

Pitot Tube Location:	Process Fan Outlet
Pitot Tube Model Number:	DS-300-10
DP Transmitter Scale:	0-5” w.c.
Duct Diameter:	10”
Flow Coefficient:	0.70
Site Elevation:	500 ft
Assumed Barometric Pressure:	14.45 PSIG
Assumed Temperature:	120˚ F.
Duct Pressure:	12” w.c.

Process Flow Sensor Conversion Table

Diff Press in. W.C.	SCFM	Diff Press in. W.C.	SCFM
0.1	475	1.6	1910
0.2	675	1.7	1968
0.3	827	1.8	2025
0.4	955	1.9	2080
0.5	1067	2.0	2134
0.6	1169	2.1	2187
0.7	1263	2.2	2240
0.8	1350	2.3	2289
0.9	1432	2.4	2338
1.0	1509	2.5	2386
1.1	1583	2.75	2503
1.2	1653	3.0	2614
1.3	1721	3.5	2824
1.4	1786	4.0	3020
1.5	1850	5.0	3400

Operation & Maintenance Guide

(Rev 1)

INTELLISHARE ENVIRONMENTAL

CLEAN AIR SOLUTIONS

Client:
XDD

Project:
Solutia – W. R. Krummerich, Sauget, IL

Equipment:
1000 CFM Thermal Oxidizer with Heat Exchange & Catalyst Module
Unit Number N-11-1199
November 2011

1422 Indianhead dr. ◊ Menomonie, WI 54751 ◊ Phone: 715.233.6115 ◊ Fax: 715.232.0669 ◊ www.intellishare-env.com

Contents

INTRODUCTION 1-1
Purpose 1-1
Precautions 1-1
Lower Explosive Limit (LEL) 1-1
Site Considerations 1-2
Process Definition 1-3
Volatile Organic Compounds (VOCs) 1-3
Catalytic Reaction 1-3
Thermal Oxidizer Mode 1-3
Catalyst Mode 1-3
SYSTEM SPECIFICATION 2-1
Manufacturing Information 2-1
Operating Specification 2-1
Mechanical Specification 2-2
Burner and Associated Equipment 2-2
Instruments 2-3
Master Bill of Material 2-4
Component Data 2-8
MAINTENANCE & SAFETY 3-1
System Maintenance 3-1
Preventive Maintenance Evaluation Program 3-1
Preventive Maintenance Evaluation Initiation 3-2
Maintenance Checklist 3-3
Spare Parts 3-4
Oxidizer Mode Change Instructions 3-5
Catalytic Mode to Thermal Mode 3-5
Thermal Mode to Catalytic Mode 3-6
Safety Instructions for Equipment Operation and Maintenance 3-7
Hazardous Communication 3-7
General Information (WARNING) Chemical Reactions 3-8
Electrical (DANGER) Electrocution 3-8
Gas Train (DANGER) Fire or Explosion 3-8
High Temperature (CAUTION) Heat and Burns 3-9
Rotating Equipment (WARNING) Caught In or Struck By 3-9
Confined Space (DANGER) Suffocation or Asphyxiation 3-9
Slippery / Elevated Surfaces (CAUTION) Slips, Trips, or Falls 3-9
Safety Precautions 3-10
Potential Hazards 3-10
TERMS & WARRANTY 4-1
Standard Terms & Conditions 4-1
Prices 4-1
Cancellations 4-1
Shipping Schedules 4-1

Electrical Equipment and Installation 4-1
Acceptance and Testing of Equipment 4-1
Risk of Loss 4-1
Limitation of Liability 4-1
Security Interest 4-2
Attorney's Fees 4-2
Ordinances 4-2
Indemnification 4-2
Miscellaneous 4-2
Warranty 4-3
Scope and Duration 4-3
Warranty Exclusions 4-3
Catalyst Deactivation & Poisoning Agents 4-4
Oxidation Catalyst Warranty & Limitation of Remedy & Liability 4-5
MECHANICAL DRAWINGS 5-1
Process & Instrumentation Diagram (P&ID) 5-2
General Arrangement Drawing 5-3
Oxidizer Installation & Mode Change Drawings 5-4
Catalyst Module Assembly Drawings & Instructions 5-5
LOGIC SEQUENCE 6-1
System Pre-Start – 6-1
System Start-Up 6-2
System Start-Up (Continued) 6-3
Putting the System On-Line 6-3
System Shut-Down 6-3
System Stand-by (Disabled) 6-4
System Run Time 6-4
Alarm History 6-5
ELECTRICAL DRAWINGS 7-1
CONTROLLER SET POINTS 8-1
Inlet Temperature Control (TIC-1) 8-1
Outlet Temperature Control (TIC-2) 8-4
HX Inlet Temp Control (TIC-6) 8-7
High Limit Temp Control 8-10
ABB Chart Recorder Settings 8-12
ABB Software – Datamanager & Emulation 8-12
General Information 8-13
Programming SM500 using PC (Emulator) 8-14
Process Flow Sensor Calculation Information 8-16
Process Flow Sensor Conversion Table 8-16
Heat Exchanger Air Sparge Flow Sensor Calculation Information 8-17
Heat Exchanger Flow Sensor Conversion Table 8-17

INTRODUCTION

Purpose

Intellishare Environmental, Inc.' s 1000 CFM Thermal Oxidizer with Catalyst Module destroys organic vapor contaminants which are discharged from soil vapor extraction, ground water treatment systems, or other systems during site remediation.

Precautions

Lower Explosive Limit (LEL)

It is important to understand the meaning of the term Lower Explosive Limit (LEL), sometimes also referred to as Lower Flammability Limit (LFL).

Lower Explosive Limit: Gases or vapors which form flammable mixtures with air or oxygen have a minimum concentration of vapor in air or oxygen below which propagation of flame does not occur on contact with a source of ignition (LEL).

There is also a maximum proportion of vapor or gas in air above which propagation of flame does not occur (UFL). These boundary line mixtures of vapor or gas with air, which if ignited will just propagate flame, are known as the "lower and upper flammable or explosive limits", and are usually expressed in terms of percentage by volume of gas or vapor in air.

The LEL is based upon normal atmospheric temperatures and pressures and the general effect of increase of temperature or pressure is to decrease the lower limit and increase the upper limit.

Applicable codes require thermal solvent processing systems to operate no higher than 25% LEL without an LEL monitor and control. Insurance companies may require LEL systems if an oxidation system is added to existing machinery.

For further information concerning the maintenance of safe LEL levels, the operator should refer to NFPA Bulletin 86A and FM Loss Prevention Bulletin No. 14.15. These bulletins will delineate how safety interlocks can be implemented in the operator's system.

!! DANGER!

Never operate the catalytic or thermal oxidizer at a concentration of vapors greater than 25% of the LEL. Even low concentrations of extremely volatile vapors may cause an explosion within the reactor system with the possibility of serious personal injury and property damage.

!! DANGER!

It is the operator's responsibility to make certain that the concentration of vapors entering the catalytic or thermal oxidizer remains less than 25% of the LEL of the vapors.

Site Considerations

1. Sites being remediated may contain equipment using relatively large quantities of gas, oil, steam, and/or electricity. Any high energy equipment carries with it a potential danger to personnel and property, and must be treated accordingly.

2. All equipment must be installed and operated in accordance with OSHA regulations, all applicable electrical, plumbing, steam boiler and building codes, necessary permits secured, and meet the requirements of your insurance carrier. Unless specified in our proposal, these are areas of customer responsibility.

3. The area should be maintained free from any hazards that would prevent easy movement around the catalytic reactor and electrical control cabinet. No flammable or otherwise hazardous materials should be stored in the immediate vicinity of the catalytic reactor. No work materials, papers or other materials should be placed on the catalytic reactor.

4. Review the operation of the oxidizer with your site safety officer before starting the unit. Any suggestions and additions should be included with these instructions.

All those involved in the operation of the system should read and understand the complete operating instructions before starting the unit. Safety meetings of all those involved with the system should be held periodically in conjunction with implementing acceptable maintenance procedures.

5. Any change in process load, temperature, ventilation or other modification should be checked with Intellishare Environmental, Inc. in advance to determine equipment capabilities.

6. Determination of catalyst or thermal efficiency in hydrocarbon oxidation is made by gas analysis of samples drawn from the system prior to and immediately after the catalyst exit face or in a thermal oxidizer system prior to and immediately after the combustion chamber. A gas analysis should be performed in the event the operator suspects any loss of catalytic activity via visual inspection or by observing that the temperature rise across the catalyst has been reduced. Before attempting any corrective measures, contact Intellishare Environmental, Inc. We will assist in determining corrective action, and if applicable, will provide specific instructions.

7. It is our desire to provide the operator with the safest and most productive equipment possible. Revised national safety standards and technological improvements will require the user to periodically review this equipment, and may require upgrading for compliance.

Process Definition

Volatile Organic Compounds (VOCs)

Volatile Organic Compounds (VOCs) are hydrocarbons which, in a gaseous or vapor form, regulatory agencies have determined contribute to air pollution. Specifically, these are hydrocarbon compounds which can enter the atmosphere (become volatile) and which chemically react with each other and other elements in the air as a result of exposure to sunlight. Such chemical reaction due to sunlight is called "photo-chemical activity". This photo-chemical activity results in what we commonly call "smog".

Catalytic Reaction

With reference to chemistry, a catalyst is a material which allows or causes a chemical reaction to take place under certain conditions which would not ordinarily occur given those conditions. For example, given a compound such as gasoline, mixed with sufficient oxygen for burning, if it was desired to ignite the mixture by simply raising the air temperature (as opposed to ignition by exposure to a flame or spark), the air temperature would have to be raised to over 1,000°F.

However, in the presence of the proper catalyst, the gasoline would combust (oxidize) with the air temperature at only 500°F. Thus, the catalyst causes the reaction to occur, even though the temperature is such that the burning could not possibly take place without the presence of the catalyst.
A unique property of the catalyst is that it is not consumed in the reaction. When a hydrocarbon burns, it is converted to carbon dioxide and water.

Thermal Oxidizer Mode

During thermal operation, VOC-laden air is delivered from the SVE system, into the heat exchanger and into the system's combustion chamber. The treated air is then directed over the hot side of the heat exchanger and finally, the treated air is exhausted into the atmosphere.

Catalyst Mode

During catalytic operation, VOC-laden air is delivered from the SVE system, into the heat exchanger and into the system's combustion chamber. The pre-heated air is then directed through the catalyst module. When the VOC-laden air passes through the catalyst, an exothermic (heat producing) reaction takes place. The VOCs in the air stream are converted to carbon dioxide and water vapor and the air temperature is raised by the process. The treated air is then directed over the hot side of the heat exchanger and finally, the treated air is exhausted into the atmosphere.

SYSTEM SPECIFICATION

Manufacturing Information

Manufacturer:	Intellishare Environmental, Inc.
Model:	TO1000
Type:	Thermal Oxidizer with Heat Exchanger & Catalyst Module
Serial Number:	N-11-1199
Date of Manufacture:	November 2011

Operating Specification

All values established for required VOC destruction efficiency

Maximum VOC Content:	40% LEL Thermal 25% Cat
VOC Destruction Efficiency:	99%
Maximum Process Air Stream:	1000 SCFM
Temperature Control Method:	Firing rate of burner controlled via temperature PID loop controller
Thermal Up to Temperature:	1350˚ F
Thermal Operating Temperature:	1400˚ F
Thermal Mode High Limit Safety By-pass mode:	1600˚ F
Thermal Mode High Limit Safety HX-Mode	1550˚ F
Thermal Exit Dilution Control:	1450˚ F
Catalyst Ready Temperature:	550˚ F
Catalyst Inlet Temperature Control:	600˚ F
Catalyst Inlet High Temperature Safety:	900˚ F
Catalyst Exit Dilution Control:	950˚ F
Catalyst Temperature High Limit Safety:	1100˚ F
Flame Arrestor Exit High Limit:	250˚ F

(Operation specification continued)

Heat Exchanger Inlet Temperature Control:	1450
Heat Exchanger Inlet High Temperature Safety:	1550
Process Blower Air Flow Differential Pressure:	0.4” w.c.
Combustion Blower Air Flow Differential Pressure:	0.4” w.c.
Catalyst Differential Pressure:	6-8” w.c.
Low Gas Pressure:	12” w.c.
High Gas Pressure:	52” w.c.

Mechanical Specification

Inner Wetted Material:	High Temperature Refractory
Outer Skin Material:	Carbon Steel
Outer Skin Thickness:	7 Gauge
Temperature Sensors:	K-Type Thermocouples

Burner and Associated Equipment

Manufacturer:	Maxon
Model:	4” Kinemax Series G
Type:	Primary Air Burner
Maximum Fire Rating:	3,200,000 BTU/HR
Voltage Input:	480/3/60

Instruments

Inlet Temperature Control:	Honeywell
Outlet Temperature Control:	Honeywell
Heat Exchanger Temperature Control:	Honeywell
High Temperature Limit:	Honeywell
Chart Recorder:	ABB SM500
LEL:	MSA
Differential Pressure Transmitters:	Foxboro

Master Bill of Material

P&ID	Qty	P/N	Title	Detail	Cut Sheet
	1		BURNER		
Burner	1	KINEMAX 4" G	MAXON KINEMAX, 4" SERIES G	NATURAL GAS, 3,200,000 BTUH	Maxon Kinemax
IT-1	1	AO6SA6X	TRANSFORMER, IGNITION	120/6000V, #12178 EPOXY FILLED	Dongan A06SA6X
S/G	1	120054	PEEPSIGHT, 2/3 PIPE UNION, 2" NPT	ECLIPSE	N/A
IT-1	2	I1-02-2046	BOOT, PROTECTOR	#02-2046	N/A
IT-1	1	I1-SSN	TERMINAL, SPRING SNAP	#021958	N/A
IT-1	1	I1-RSN	TERMINAL, RING	HIGH VOLTAGE	N/A
IT-1	10	I1-734803	WIRE, IGNITION	STANDARD BLACK	N/A
	1		HEAT EXCHANGER		
HX-1	1	CUSTOM HX	TUBE & SHELL 1000 CFM	NOMINAL 50-60% efficient, 316 SS INTERNALS, INSUALTED	N/A
Damper 1&2	2	FNW731B10	BUTTERFLY VALVE, 10" WAFER	CI BODY, SS. DISC	FNW 731 Butterfly Valve
	1	10X14FLG	FLEX HOSE 316SS. 150# FLANGES	10" DIA., 14" OAL	N/A
	1		FAN/FAN ASSEMBLY		
M1	1	NYB-1908-10HP-3PH	BLOWER, PRESSURE, NYB SIZE 1908, AL WHEEL, ARR 8	10 HP, 3600 RPM, TE, 215T,3-60-230/460V	NYB PB IM, NYB PB
M2	1	NYB-2104-5HP-3PH	BLOWER, PRESSURE, NYB SIZE 2104, AL WHEEL, ARR 4	5 HP, 3500 RPM, TE, 184T, 3-60-230/460V	NYB PB IM, NYB PB
M4	1	NYB-1504-3HP-3PH	BLOWER, PRESSURE, NYB SIZE 1504, AL WHEEL ARR4, CCW, UB	3HP, 3600 RPM, TE, 182T, 3-60-230/460,	NYB PB IM, NYB PB
Dilution, M2, M4	3	F72-6	FILTER, AIR INTAKE & FILTER SILENCER, 6"	6" FLANGE CONNECTION, FOAM ELEMENT	Stoddard F72 Series
PDI-1 PDI-2	2	A40-108	FILTER SERVICE INDICATOR	STODDARD	NA
M6 valve	1	6BWM-1153-N	VALVE, BUTTERFLY, 6", ANGLE SEAT	VALV-TECH, BARE STEM	Valv-tech BL-BW
M5 Valve	1	8BWM-1153-N	VALVE, BUTTERFLY, 8", ANGLE SEAT	VALV-TECH, BARE STEM, W/KEYWAY	Valv-tech BL-BW
HV-6	1	30-0400-11010-622	VALVE, BUTTERFLY, 4", BRAY SERIES 30-622, CI BODY, DI DISC, BUNA SEAT	BRAY SERIES 30, w/GEAR OPERATOR	Bray Series 30
Air Sparge	1	501230	VALVE, BUTTERFLY, AUTOMATIC, FULL PORT, 4" NPT	BEVELED SHUTTER 75 DEG ROTATION, ECLIPSE 16BV-AB	Eclipse BV
Air Sparge	1	501222	VALVE, BUTTERFLY, MANUAL, FULL PORT, 4" NPT	BEVELED SHUTTER 75 DEGREE ROTATION, ECLIPSE 116BV-B	Eclipse BV

Master Bill of Material (continued)

P&ID	Qty	P/N	Title	Detail	Cut Sheet
	1		FUEL TRAIN		
PI-2	1	J7840P	GAUGE, LOW PRESSURE DIAPHRAGM, 0-15 PSIG	2.5 FACE, 1/4" LOWER MOUNT, LIQUID FILLED	Marsh Severe Service Gauge
PI-3	1	G22704	GAUGE, LOW PRESSURE DIAPHRAGM, 0-30" WC	2.5 FACE, 1/4" LOWER MOUNT, FLUTTER GUARD	Ashcroft Pressure Gauge 1490
Main Gas	2	701-1060	VALVE, BALL, 1.5" NPT	JOMAR FULL PORT BRASS	Jomar T-100
Pilot Gas	2	701-1040	VALVE, BALL, ½" NPT	JOMAR FULL PORT BRASS	Jomar T-100
Primary & Sec	2	D230475	PRESSURE REGULATORS, FRI 712/6	KARL DUNGS	Dungs Pressure Reg FRI-6
S1-S2	1	230-793 VP	DMV-D 703/622 DUAL MODULAR VALVE w/VENT VALVE ADAPT, 1-2" BODY SIZE, 120VAC	7 PSI, FAST OPEN/CLOSE, ADJ MAX FLOW, PROOF OF CLOSURE ON VALVE 2	Dungs DMVD Multivalve
S1-S2	2	D225047	ADAPTER ACCESSORIES, 1/4" NPT	FOR DMV & FRI - KDI FUEL TRAINS	N/A
ZI-2	1	46000-6	VISUAL INDICATOR FOR DMV	DUNGS FUEL TRAIN VALVE ASSEMBLY	N/A
PSH-1	1	46015-6	SWITCH, HIGH GAS PRESSURE, 12-60" WC, DIAL ADJ, MANUAL RESET	1/4" NPT PIPE MOUNT, NEMA4, UL/CSA/FM, GMH-A4-4-6, DUNGS FUEL TRAIN VALVE ASSY	Dungs Pressure Switch GAO, GMH
PSL-1	1	46016-4	SWITCH, LOW GAS PRESSURE, 1-20" WC, MANUAL RESET	1/4" NPT PIPE MOUNT, NEMA4, UL/CSA/FM, GML-A4-4-4 , DUNGS FUEL TRAIN VALVE ASSY	Dungs Pressure Switch GAO, GMH
S1-S2	1	D214975	ADAPTOR, FOR SIDE MT HIGH GAS SW ON DMV	DUNGS FUEL TRAIN VALVE ASSY, GAO, GML GMH A2	N/A
S1-S2	2	D219008	TEST NIPPLE	ACCESSORIES, G 1/8 FOR DMV	N/A
Primary Sec	2	D2221996	FLANGE 1.5" NPT, DMV 703	DUNGS FUEL TRAIN VALVE ASSY	N/A
S1-S2	1	D229846	SPRING #5, RED, 10 TO 22" WC	FOR FRI 710 & 712 PRESSURE REGULATORS	N/A
S1-S2	1	D229847	SPRING #6, YELLOW, 12-28" W.C.	FOR FRI 710 & 712 PRESSURE REGULATORS	N/A

Master Bill of Material – Fuel Train (continued)

P&ID	Qty	P/N	Title	Detail	Cut Sheet
M3	1	100099	KIT, ACTUATOR MOUNTING, 0.5-4", V2	FOR ECLIPSE/DUNGS FUEL SYSTEMS	N/A
S3-S4	2	8214G20	VALVE, SOLENOID, ASCO, 1/2"	NORMALLY CLOSED, 120V, W/18" NPT TAPS	Asco Series 8214 V6676R5
S5	1	8214G023	VALVE SOLENOID, ASCO, ½" NPT, GAS VENT	ALUM BODY, NORMALLY OPEN, 120 VAC	ASCO 8214 V6675R3
S6	1	8214G054	VALVE SOLENOID, ASCO, 1" NPT, GAS VENT	ALUM BODY, NORMALLY OPEN, 120 VAC	ASCO 8124 V7466R2 & Sec (2)
Pilot - Primary	1	M1-325-3-1/2	REGULATOR, 1/2", NO LIMITER	PILOT GAS PRESSURE	Maxitrol MI2010, MS2055
Pilot - Primary	1	211-1125	SPRING, RED, 10-22" W.C.	FOR M1-325 PILOT REGULATOR	N/A
Main Gas	1	ST-11M-1.5	Y-STRAINER 1.5" NPT	100 MESH SS SCREEN	Mueller CI y-Strainer
Pilot	1	VA-3018	GAS COCK, 1/2", ADJUSTABLE		N/A
FI-3	1	5M175CTR	METER, ROOTS GAS, MECHANICAL TOTALIZER	FLANGED CONNECTION	Roots Meter B3_5M175
			CONTROLS		
M3, M6, M7, ZSL-3 ZSH-6	3	M7284C-1000	ACTUATOR, HONEYWELL 120V, 4-20 mA INPUT W/AUX SWITCH	MODUTROL SERIES 72, 150 IN/LB ADJ STROKE	HW Series 72 Mod Motors
M5	1	RCEL-006-A120	ACTUATOR, NEMA 4, OPEN/CLOSE, 520 IN/LBS TORQUE, 120 VAC,	MANUAL OVERRIDE, POSITION INDICATOR, ROTORK RCEL SERIES	RCEL IM Manual RCEL Series
M6, M7	1	Y20DAA-KIT-2	LINKAGE ASSEMBLY, VALLEY	FOR HONEYWELL DILUTION VALVE ACTUATOR	N/A
UV	1	C7061A1012	SCANNER, UV FLAME DETECTOR, SELF-CHECKING	HONEYWELL PURPLE PEEPER	HW C7061AUV Scanner
PDSH-2	1	46020-5	SWITCH, AIR PRESSURE, 2-20" WC	1/4" NPT, NEMA4, DIAL ADJ, UL/CSA/FM, AA-A2-6-5, DUNGS	Dungs Air Pressure AA A2
PDSL-1 PDSL-2	2	46020-3	SWITCH AIR PRESSURE, .4-4" WC	1/4" NPT, AA-A2-6-3, DUNGS	Dungs Air Pressure AA A2

Master Bill of Material (continued)

P&ID	Qty	P/N	Title	Detail	Cut Sheet
		MCC & MCP	CONTROL PANEL (S)	SEE SHEET N-11-1199-450 & 451 FOR COMPLETE LIST OF PANEL PARTS	
			CATALYST		
Cat	3	C-100 MODULE	CATALYST, JM CHLORINATED, 23.25" X 22.25" X 6.375"	JOHNSON MATHEY, 400 CPSI	N/A
Cat	3	C-50 MODULE	CATALYST, JM CHLORINATED, 23.25" X 11.125" X 6.375"	JOHNSON MATHEY, 400 CPSI	N/A
			FLAME ARRESTOR		
Flame Arrestor	1	KFB76180611	ARRESTOR, FLAME ELEMENT BANK 6"	GROTH, 6061 SCH 805 AL PIPE, 16" DIA	Groth FA 7618-7628
			INSTRUMENTATION		
TE-1,A,B TE-2,A,B TE-3,A,B TE-4,A,B TE-6	5	KKK48U-027-00-8HN34	THERMOCOUPLE, TRIPLE ELEMENT, ½" NPT PROCESS CONNECTION, CI HEAD, 316 SS PROBE	TYPE K, 27", PYROMATION	Pyromation Brochure & Tech
TE-5	1	KK48U-012-00-8HN34	THERMOCOUPLE, DUAL ELEMENT, ½" NPT PROCESS CONNECTION, CI HEAD, 316 SS PROBE	TYPE K, 12", PYROMATION	Pyromation Brochure & Tech
FE-2	1	VF-2-BV	FLOWMETER, VISI-FLOAT 0.2-2 SCFH	DWYER	Dwyer Visifloat Series VF
FE-1	1	DS300-8-LV	FLOW SENSOR, 8", LESS VALVES	DWYER	Dwyer Flow Sensor DS-300
FE-4	1	DS-300-4-LV	FLOW SENSOR, 4", LESS VALVES	DWYER	Dwyer Flow Sensor DS-300
FIT-4	1	IDP10-A22A01F-M1L1 0-3"WC	TRANSMITTER, DIFF. PRESS, FOXBORO, IDP10 4-20 mA OUTPUT, 316SS	CALBRATED 0-2" W.C., FM EXP CLASS I, DIV 1, GROUPS B, C, & D.	Foxboro IDP10 Data, O&M
FIT-1	1	IDP10-A22A01F-M1L1 0-5"WC	TRANSMITTER, DIFF. PRESS, FOXBORO, IDP10 4-20 mA OUTPUT, 316SS	CALBRATED 0-2" W.C., FM EXP CLASS I, DIV 1, GROUPS B, C, & D.	Foxboro IDP10 Data, O&M
FIT-3	1	IDP10-A22A01F-M1L1 0-20"WC	TRANSMITTER, DIFF. PRESS, FOXBORO, IDP10 4-20 mA OUTPUT, 316SS	CALBRATED 0-1" W.C., FM EXP CLASS I, DIV 1, GROUPS B, C, & D.	Foxboro IDP10 Data, O&M
PDI-3	1	MAG 2010	GAUGE, MAGNEHELIC 0-10"WC	DWYER	Dwyer Mag Gauge 2000 Series

AIT-1 AE-1	1	ULTIMA- XPE32U3S20012100	LEL MONITOR, CAT BEAD TYPE, W/LCD DISPLAY	316 SS ENCLOSURE, CALIBRATED ON CHLOROBENZENE CURVE	Ultima X Series O&M

Component Data

Please refer to accompanying CD for component specification information.

MAINTENANCE & SAFETY

System Maintenance

Though relatively trouble-free in operation, the oxidizer is primarily a piece of combustion equipment with consequent mechanical rotating equipment in the form of fans and motors, temperature and fuel controls with safety interlocks, an electrical control system, loop controls to maintain temperature and flow rate parameters for maximum efficiency, and other components. Many elements of the oxidizer design are included in compliance with Factory Mutual (FM), Industrial Risk Insurers (IRI), and National Fire Protection Association (NFPA) requirements.

As such, like any piece of combustion equipment, the oxidizer must be regularly maintained and should be fully inspected and evaluated at least annually.

A checklist of maintenance items and recommendations is included as a separate entry in this manual. The maintenance items should be reviewed and carried out on an as needed basis and at least once per year.

Regular maintenance not only assures compliance with the appropriate clean air regulatory agency requirements, and the requirements of safety regulatory bodies and insurance carriers; it also helps maintain equipment efficiency for minimum operating costs.

Preventive Maintenance Evaluation Program

As an aid to maintaining oxidizer operation at peak efficiency, Intellishare Environmental, Inc. offers a Preventive Maintenance Evaluation which includes a complete inspection and evaluation of oxidizer components and performance along with tuning and adjustment, as needed.

It is recommended that the Preventive Maintenance Evaluation be performed at least once per year.

A check list and evaluation summary is provided with each inspection. The summary identifies maintenance requirements and recommendations for corrective action if any is required.

The preventive maintenance evaluation is custom tailored to the particular piece of equipment inspected, but includes:

1. Mechanical

An external and internal inspection of the oxidizer and mechanical components is performed. This includes fan and motor assemblies, burner (or heater on electric units), catalyst, reactor chamber, stack and observation ports, access doors, ductwork, dampers, and linkages.

2. *Electrical*

Electrical components are visually inspected and electrically tested for proper function. This includes switches, lights, relays, timers, controllers, recorders, motors, motor starters, motor drives, damper and/or valve actuators, disconnects, wiring, alarm detection and annunciation, and logic circuits.

3. Process Control Loops

The temperature and pressure control loops are inspected and tested to verify correct operation of sensors, loop controllers, and end control devices. This includes tests of the electric heater\burner firing rate, fan variable speed drive or vortex damper reaction, actuator performance, and loop tuning adjustment as needed.

4. Catalyst Evaluation and Oxidation Efficiency Test

An oxidation efficiency test is performed using a portable detector unit. Additionally, samples of the catalyst are sent for independent destruction efficiency evaluation. The catalyst evaluation and oxidation efficiency tests are valuable for detecting potential problems (should any exist) early, helping to avoid clean air compliance problems before they occur.

Preventive Maintenance Evaluation Initiation

For complete information on the Preventive Maintenance Evaluation Program contact the Technical Services Department of Intellishare Environmental, Inc.

Maintenance Checklist

Properly maintained equipment ensures maximum operating performance and minimum operating costs. Following is a schedule of suggested regular maintenance. Please refer to each individual manual for a more comprehensive maintenance list.

Main Components	**Test**	**Monthly**	**Quarterly**	**Semi-Annually**	**Annually**
Fan Mounting Bolts	Tightness	X			
Fan Bearings (Use a premium lithium NLGI #2 EP Grease such as Mobil XHP or Equivalent)	Lubrication	X			
Fan Motor Bearings (Use Polyurea Synthetic Grease only – Mobil Polyrex or Equiv, Do not over lubricate)	Lubrication	X			
Fan Motor Amperage	Windings	X			
Maxon Micro Ratio Valve (Use a premium lithium NLGI #2 EP Grease such as Mobil XHP or Equivalent)	Lubrication	X			
Gas Train	Leaks	X			
Burner/Flame Visual	Quality	X			
Flame Strength	Signal	X			
Dilution Valve Linkage	Moves Freely	X			
Instrumentation	Condensate	X			
Temperature Controller	Accuracy				X
Electrical Wiring Terminals	Tightness			X	X
Flame Arrestor	Pressure Drop				X
Catalyst	Signs of plugging or discoloration				X
Chart Recorder	Download Data	X			
Destruction Efficiency	Various				X
LEL Meter – Use 0.6 propane – display should read 40% LEL on chlorobenzene curve	Calibration		X		

Spare Parts

The following is a list of suggested spare parts to keep on hand for the oxidizer

Qty	Part Number	Description
2	XXXXXXX	Grease Gun(s)
1	Mobil POLYREX EM 14OZ (or Equivalent)	Polyurea synthetic grease for blower motors
1	MOBILGREASE XHP (or Equivalent)	NLGI #2 Lithium based premium grease
1	R7861 A1026	UV Amplifier, Honeywell for self checking sensor
1	C7061A1012	UV Sensor, Honeywell Self Check NEMA 4
1	KKK48U-027-008-NH34	Thermocouple, Triple, Type K, 27"
1	46020-3	Pressure Switch, Dungs .4-4” W.C.
1	34043	Spark Igniter for Maxon Kinemax 4” - G
1	I1-RSN	Ignition Terminal, Ring
1	I1-SSN	Ignition Terminal, Snap Spring
1	I1-02-2046	Ignition Boot Protector
1	DC2500-CE-1A00-200-00000-00-0	Temperature Controller, Honeywell
2	F8-121	Combustion/Dilution/Sparge Air filter Element
1	M7284C1000	Modulating Motor, Honeywell w/limit switches
2	14264	Linkage Swivel for 5/16” Rod – HW Mod Motors
2	IEC-000-103-1	Flame Arrestor Gasket for 6” Groth Element
1	46015-6	High Gas Pressure Switch, Dungs 12-60” w.c.
1	46016-4	Low Gas Pressure Switch, Dungs 1-20” w.c.
1	Cal Gas – Zero Air	221L Cylinder of Zero Air–LEL Calibration
1	221L-176-0.6	221l Cylinder of 0.6% Propane in air –LEL Calibration
1	70-1.0 w/adaptor	Cal Gas Regulator, Fixed 1 LPM delivery
1	MSA 809086	Calibration Controller for MSA LEL Sensor

Oxidizer Mode Change Instructions

!! DANGER!

Improper set-up could result in personal injury or permanent equipment damage. It is strongly recommended that Intellishare Environmental, Inc. be contracted to perform system mode changes. It is extremely critical that all temperature settings, inserts, damper positions, airflow and gas settings are correct.

Catalytic Mode to Thermal Mode

	Temperature Controllers
1.	Main power to the oxidizer control panel is required to be on for controller adjustment.
2.	Adjust the **High Limit Temperature Controller**. Press the up arrow key until lower display reads 1500 degree F. (HX Mode) 1600 degree F. (By-pass Mode)
3.	On the **Inlet Temperature Controller**, press set up button until CONTRL is displayed. Press the function button until SP Hi is displayed. Use the up arrow display until 1600 is displayed.
4.	Press set up button until ALARMS is displayed. Press the function button until A1S1VA is displayed. Used the up arrow display button until 1500 degree F. (HX Mode) 1600 degree F. (By-pass Mode) is displayed.
5.	Press the set up button until ALARMS is displayed. Press the function button until A2S1VA appears. Use the up arrow display button until 1350 is displayed.
6.	Press the display button until SP appears in the lower display. Use the up arrow display key until 1400 is displayed. Press display again and the inlet temperature control set points are complete.
7.	On the **Outlet Temperature Controller**, press the set up button until CONTRL is displayed. Press the function button until SP Hi appears. Use the up arrow display button until 1600 is displayed.
8.	Press the display button until SP appears in the lower display. Use the up arrow display key until 1450 is displayed. Press display again and the outlet temperature control set points are complete.
9.	Adjust LEL if equipped to Alarm 3/40% – Hand Held Programmer Required
10.	Adjust or change primary and/or secondary regulator springs to achieve proper burner output. Micro Ratio valve may also need adjustment – consult Intellishare Environmental for specific information
11.	Press the Start button on the Operator Interface Panel to start the Oxidizer.
	Catalyst Mechanical Removal
	Note: When reinstalling components, make sure flange gaskets are in good condition and proper position. Replace gaskets where necessary. Once the catalyst is removed note any unusual wear and/or discoloration.
1.	Refer to Install Mode Change drawing - Thermal Mode Heat Exchange Enabled or Thermal Mode Heat exchanger Bypass depending upon whether or not HX use is desired.

Thermal Mode to Catalytic Mode

	Controllers
1.	Main power to the oxidizer control panel is required to be on for controller adjustment.
2.	Adjust the **High Limit Temperature Controller**. Press the up arrow key until lower display reads 1100 degree F. (HX Mode) 1100 degree F. (By-pass Mode)
3.	On the **Inlet Temperature Controller**, press set up button until CONTRL is displayed. Press the function button until SP Hi is displayed. Use the down arrow display until 1100 is displayed.
4.	Press set up button until ALARMS is displayed. Press the function button until A1S1VA is displayed. Use the down arrow display button until 900 is displayed.
5.	Press the set up button until ALARMS is displayed. Press the function button until A2S1VA appears. Use the down arrow display button until 550 is displayed.
6.	Press the display button until SP appears in the lower display. Use the down arrow display key until 600 is displayed. Press display again and the inlet temperature control settings are complete.
7.	On the **Outlet Temperature Controller**, press the set up button until CONTRL is displayed. Press the function button until SP Hi appears. Use the up arrow display button until 1100 is displayed.
8.	Press the display button until SP appears in the lower display. Use the down arrow display key until 950 is displayed. Press display again and the outlet temperature control set points are complete.
9.	Adjust LEL if equipped to Alarm 3/25% – Hand Held Programmer Required
10.	Adjust or change primary and/or secondary regulator springs to achieve proper burner output. Micro Ratio valve may also need adjustment – consult Intellishare Environmental for specific information
11.	Press the Start button on the Operator Interface Panel to start the Oxidizer.
	Catalyst Mechanical Installation
	Note: When reinstalling components, make sure flange gaskets are in good condition and proper position. Replace gaskets where necessary. Inspect the catalyst module and catalyst hold-down. The catalyst should be free of debris and the catalyst hold-down should be snug.
1.	Refer to Install Mode Change drawing - Catalytic Mode Heat Exchange Enabled

Safety Instructions for Equipment Operation and Maintenance

PLEASE READ THIS ENTIRE SECTION BEFORE ATTEMPTING TO OPERATE OR PERFORM WORK ON THIS EQUIPMENT. FOLLOW THE INSTRUCTIONS CAREFULLY AND COMPLETELY. SAFETY IS THE RESPONSIBILITY OF EVERYONE.

This section describes safety instructions and general precautions to be followed when operating this equipment. This section also contains precautionary information to be heeded when performing maintenance, repairs or testing on the equipment. The information is intended as a guide to safe operation and maintenance of your system. It does not supersede or replace either the provisions of a safety program or any specific safety procedures established by the equipment user. Intellishare Environmental, Inc. has endeavored to use reasonable care and good judgment in identifying the potential hazards associated with this equipment. It is not possible to anticipate and address every hazardous situation. Neither can it address specific situations that may be unique to the user of the equipment. *Planning, concern, common sense, maturity and the elimination of careless practices is necessary in any safety program.*

Only properly trained and authorized personnel should be allowed to work on or around this equipment. It is the responsibility of the equipment user to establish appropriate safety health practices and to determine the applicable or regulatory limitations prior to use. All personnel involved with or affected by this equipment should read and understand this document, and all pertaining user supplied safety documents. It is strongly recommended that a barrier be erected around the equipment to deter unauthorized entrance into the installation area.

At no time shall any of the equipment controls be modified, bypassed or rendered inoperative without prior authorization from an Intellishare Environmental representative. To do so may result in equipment damage, personal injury or death.

This equipment has been designed and manufactured for use in conjunction with specific user equipment. The operation of this equipment under conditions outside of the original design, or with equipment other than the original design may be extremely hazardous. At no time should this equipment be used for anything other than its original design specifications. This equipment has been designed to discontinue operation in the event of an unexpected malfunction. Do not attempt to re-start the equipment until the source of the malfunction has been identified and eliminated.

Hazardous Communication

Industry throughout the United States has established a uniform method for identifying the potential severity of a hazard. This method has also been further documented in various publications including those published by the American National Standards Institute. Intellishare Environmental, Inc. has used reasonable care to assure that the hazards included in this section conform to these established standards. The hazard levels are as follows:

(DANGER) An immediate hazard that will result in severe personal injury or death.

(WARNING) A hazard or unsafe practices which could result in severe personal injury or death.

(CAUTION) A hazard or unsafe practices which could result in minor personal injury, product damage, or property damage.

General Information (WARNING) Chemical Reactions

There are a number of hazards that inevitably occur due to the physical and chemical nature of the equipment. This equipment contains materials and chemical substances that may have adverse impact on the human body. Personnel responsible for the erection, maintenance and/or operation of this equipment should be knowledgeable and exercise care to provide protection against hazards to all affected personnel as well as equipment.

Electrical (DANGER) Electrocution

High voltage is present at many points of this equipment. Although every precaution has been taken to insure the safety of the operator, coming into contact with this voltage may result in serious injury or death. Only trained and qualified electricians should be allowed to work on the electrical components of this equipment. Observe all OSHA Lockout/Tagout requirements pertaining to this type of equipment to prevent accidental electrocution. The electrical power should be disconnected and locked out before entering into any electrical compartment. The equipment should be properly grounded and all interconnecting wiring should be installed in accordance with local, state and NEC codes.

Common system voltages include:

Ignition Circuits	6000+ Volts AC (Design Specific)
Electric Heater Circuits	208 / 240 / 480 Volts AC (Design Specific)
Motor Circuits	208 / 240 / 480 Volts AC (Design Specific)
Control Circuits	120 Volts AC (Design Specific)

Gas Train (DANGER) Fire or Explosion

Many of the equipment designs incorporate a natural gas or propane fuel train and burner to process contaminants. Unless authorized by a representative of Intellishare Environmental, do not attempt to modify or adjust components on the gas train. Personnel affected by this equipment should be trained on how to shut off the gas supply to the equipment in the event of a gas leak. Only trained and qualified personnel should be allowed to work on the gas train. Observe all OSHA Lockout/Tagout requirements pertaining to this type of equipment to prevent accidental releases of combustible gases. Observe all NFPA guidelines during installation, troubleshooting, and maintenance procedures performed on the equipment. Periodic inspection should be performed along with leak detection and indicator accuracy verification. System shutdown devices are incorporated into the gas train and these devices should be inspected periodically for proper operation. No open flame or spark emitting devices should be allowed in the area of the gas train.

High Temperature (CAUTION) Heat and Burns

Many of the equipment designs operate in a wide range of temperatures between 400° F and 1600° F. Although the equipment is insulated to reduce external surface temperatures, personnel should exercise caution when working on or around the equipment. Contact with hot surfaces may result in burn injuries. It is strongly recommended that the equipment be shut down and allowed to cool before any work is performed in this area.

Rotating Equipment (WARNING) Caught In or Struck By

Many of the equipment designs incorporate rotating components (i.e. motor drives, blowers, fans, etc...) into the design process. Use extreme caution when working on or around these components. Do not wear loose clothing or jewelry, and keep long hair protected. Observe all OSHA Lockout/Tagout requirements pertaining to this type of equipment to prevent accidental or automatic controlled starts. Remove all tools, electrical cords, and debris from the area before attempting to restart the equipment. Never attempt to repair or adjust rotating equipment while it is running. Always insure that all equipment guards are installed before attempting to start rotating equipment.

Confined Space (DANGER) Suffocation or Asphyxiation

The interior chambers of this equipment are confined space areas that may not contain enough oxygen to support human life. **Suffocation is possible.** According to OSHA guidelines, the minimum safe environment must contain at least 19.5 % oxygen for personnel to work in a confined space. The oxygen content in a normal environment is approximately 21%. In addition to the verification of oxygen content, it is extremely important to test the atmosphere within the confined space for hazardous chemical concentrations. **Asphyxiation is possible.** The atmosphere within the confined space must be checked for site-specific chemicals before entry is allowed. Observe all OSHA requirements pertaining to confined space before allowing personnel to enter these areas. **Do not enter into any confined space area until the atmosphere in that space has been tested by qualified personnel with the appropriate testing equipment.**

Slippery / Elevated Surfaces (CAUTION) Slips, Trips, or Falls

When working at elevations, observe the OSHA requirements for use of ladders, man-lifts, and safety restraint devices. Always be aware of slippery surfaces that may be caused by rain, snow, or ice. Do not climb on system piping or components as equipment damage or personal injury may occur.

Safety Precautions

The Intellishare Environmental, Inc. equipment and systems have been designed in such a manner as to present a minimum of safety hazards. It is, however, incumbent upon operating and maintenance personnel to follow safety procedures when in the area of the system and controls.

!! DANGER!

Never introduce concentrations exceeding 25% of the lower explosive limit (LEL) to a Catalytic Oxidizer.

Never introduce concentrations exceeding 50% of the LEL to a thermal oxidizer.

Operation >25% of the LEL must be accompanied by an LEL sensor alarm in accordance with NFPA Standards.

Potential Hazards

- Only competent, safety conscious personnel should have access to the area.
- Only qualified personnel should work on the electrical panel and controls. Follow all electrical and safety codes.
- Individuals working with this system must be familiar with the equipment and hazards involved and be fully trained in the operation of the equipment.
- All areas around the system must be restricted to authorized personnel only.
- Personnel in the area must wear safety equipment in compliance with plant and/or site safety standards.
- The system must be “shut down” and “locked out” before working on any part of the system. Possible injury to personnel could otherwise occur.
- All safety guards and devices must be correctly installed and in place before operating equipment.
- Do not touch the flame rod or spark ignitor, or ground the electrode while the oxidizer is operating. This is an electrical shock hazard.
- Check for gas leaks every week in the gas train and main gas line. A gas leak could produce a dangerous explosive condition. Repair all gas leaks immediately.
- Do not operate the oxidizer with the purge cycle shortened or bypassed. The purge cycle is factory-set for safe operation and must not be changed.
- Do not change damper or valve settings without first consulting Intellishare Environmental, Inc.

- Any fires that occur within the oxidizer and its related equipment should not be extinguished with water. Either a build-up of flammable substances or a faulty electrical circuit would most likely cause these fires. The proper fire fighting equipment must be available and operators must be trained in the use of the fire fighting equipment.

TERMS & WARRANTY

Standard Terms & Conditions

Prices

Prices are quoted in U.S. dollars and may be accepted only within 90 days from date of quotation by Intellishare Environmental, Inc. Quotations do not include taxes unless otherwise noted. Orders accepted prior to any price increase will be invoiced as quoted provided Intellishare Environmental is allowed to ship under its normal delivery schedule. Intellishare Environmental may adjust prices on any order changed by the Purchaser after acceptance of the order by Intellishare Environmental.

Cancellations

Orders cancelled by the Purchaser are subject to a cancellation charge which may include engineering service, work in progress, special purchased parts changes and other similar charges.

Shipping Schedules

Intellishare Environmental, Inc. will not be liable for any loss or damage from delays in shipping beyond Intellishare Environmental's reasonable control. Shipments delayed at Purchaser's request will be invoiced and dated on the day shipment is ready and a 1% per month service charge will be added. Intellishare Environmental reserves the right to make partial shipments and to invoice pro rata upon such shipments.

Electrical Equipment and Installation

Electrical equipment includes only those electrical components referred to in the quotation. Changes to electrical equipment to comply with any local, state, provincial or national regulations are the Purchaser's responsibility unless Intellishare Environmental specifically agrees to meet said regulations.

Acceptance and Testing of Equipment

Purchaser will upon delivery inspect and test the equipment and notify Intellishare Environmental in writing within 30 days of installation of all defects discovered, including failure of the equipment to meet quoted performance standards. Failure to give such notice constitutes irrevocable acceptance of the equipment, the equipment will be deemed to conform to the terms of this Agreement and Purchaser will be bound to pay for the equipment. Upon notification of a defect as above provided, Intellishare Environmental will repair the equipment and correct the system's performance.

Risk of Loss

Quotations are F.O.B., place of shipment, unless otherwise noted. The risk of loss of the equipment will pass to Purchaser upon Intellishare Environmental's delivery of the equipment to a carrier. Claims for damage in shipment must be filed by Purchaser with the carrier.

Limitation of Liability

In no event will Intellishare Environmental, its subcontractors or representatives, be held responsible, or liable for any claim, whether in warranty, contract, tort or strict liability for any special, indirect, incidental or consequential damages resulting from

the purchase of equipment (including but not limited to incidental or consequential damages for labor, lost profits, lost sales, injury to person or to property or any other incidental loss or damages).

Purchaser agrees that Purchaser's exclusive remedy and Intellishare Environmental's sole liability on any such claim will be limited to reimbursement from Intellishare Environmental of the purchase price actually received by Intellishare Environmental from Purchaser for the equipment in question.

Security Interest

Purchaser grants Intellishare Environmental a security interest in the equipment to secure payment of the balance due hereunder. Purchaser authorizes Intellishare Environmental to file this Agreement as a Financing Statement or to sign on behalf of Purchaser and file any other Financing Statements with respect to the equipment in any place Intellishare Environmental deems necessary.

Attorney's Fees

Purchaser will be liable for all reasonable expenses and attorney's fees incurred by Intellishare Environmental in enforcing its rights and remedies under this Agreement.

Ordinances

Any and all required licenses, certificates and operating permits will be the sole responsibility of the Purchaser unless otherwise specified by Intellishare Environmental, Inc.

Indemnification

Purchaser shall indemnify and save Intellishare Environmental, Inc. harmless against all losses or claims for bodily injury (including death) and property damage relating to the equipment or sustained by Seller while Seller or Seller's agents, employees or representatives are at a location selected by Purchaser except Purchaser shall not indemnify Seller if said damages are the result of Seller's willful and wanton acts.

Miscellaneous

The terms and conditions contained herein and any other terms and conditions stated in Intellishare Environmental's proposal or specifications attached hereto will constitute the entire agreement between Intellishare Environmental and Purchaser. The terms and conditions stated herein are applicable to all orders accepted by Intellishare Environmental, Inc. unless otherwise specifically agreed to by Intellishare Environmental in writing. Purchaser will be deemed to have assented to all such terms if any part of the described equipment is to be accepted. If Purchaser finds any terms not acceptable, Purchaser must so notify Intellishare Environmental within 10 days. Any additional or different terms contained in Purchaser's order to response hereto will be deemed objected to by Intellishare Environmental and will be of no effect. This proposal and its acceptance will be governed in all respects by the laws of Wisconsin. In the event of a breach, both parties agree that any suit will be brought in the jurisdiction of Wisconsin.

Warranty

Scope and Duration

Intellishare Environmental warrants to buyer that the products to be delivered will (a) be free from defects in material and manufacturing workmanship (b) conform to manufacturer's applicable product descriptions attached to Seller's quotation. If no product descriptions or specifications are attached to the quotation, manufacturer's specification in effect on the date of shipment will apply.

For oxidizers utilizing a catalyst, Intellishare Environmental guarantees the conversion efficiency of the system as long as the catalyst bed temperatures are kept within a specified range and certain neutralizers are kept out of the air stream. Please see accompanying list of catalyst poisons.

Purchaser is responsible to limit the introduction of hydrocarbon vapors, which exceed the LEL rating of the system as specified by the National Fire Protection Association (NFPA) & Intellishare Environmental. Detonation and damage as a result of LEL excess is solely the purchaser's responsibility.

Intellishare Environmental guarantees the conversion efficiency of the system or an outlet concentration of 20 ppmv as C1, whichever is less stringent.

The product warranties are for a period of 12 months from the date of shipment.

Intellishare Environmental shall rely on process and chemical information provided by Purchaser or its agents and shall not be liable for inaccurate data, undisclosed or unknown process or chemical materials.

Warranty Exclusions

Warranty coverage does not include (a) freight, labor, travel or living expenses associated with parts replacement (b) normal maintenance items such as lubrication, fan belts and cleaning of the equipment.

In the event the customer, or any installation contractor employed by the customer, contracts outside Intellishare Environmental for installation work or erection of quoted equipment, the customer will assume full responsibility for workmanship resulting from said contract.

Catalyst Deactivation & Poisoning Agents

The following partial list of poisoning agents and inhibitors has been found to have a detrimental effect on the activity of the noble metal catalyst. Catalyst exposure to these substances must be avoided. The catalyst manufacturer's warranty applies to all claims.

Substance	**Effect**	**Remedial Action**
Coating Agents - rust - dirt - inorganic oxide	Covers catalyst active site.	Non-phosphate detergent washing usually effective for removal. Factory reactivation or replacement usually required. Non-phosphate detergent washing may be effective.
Glass Forming Coating Agents - organic silicates (esters) - silicones - phosphorus containing materials	Covers catalyst active site.	Factory reactivation or replacement usually required. Non-phosphate detergent washing may be effective.
Poisons – Heavy Metal Complexes - Mercury - Lead - Zinc - Tin - Arsenic - Antimony, etc.	Permanent catalyst deactivation	Factory reactivation or replacement required.
Sulfides	Permanent catalyst deactivation	Depending on exposure and sulfide concentration, factory reactivation, non-phosphate detergent washing or replacement is required.
Halogens - fluorine - chlorine - bromine - iodine - halogenated hydrocarbons	Covers active site-resulting in temporary or permanent deactivation.	Activity usually returns if exposed to low concentrations and upon removal of halogen source. Prolonged exposure with water (or protons) can corrode, dissolve the catalyst substrate and require repair or replacement.
Note: Does not apply to HD or t-HD catalysts which have been specifically designed to be tolerant of and/or destroy halogenated hydrocarbons (excluding fluorine).		
Organic Droplets and Aerosols	Covers active site. Possible cause of catalyst hot spot.	Such materials may carburize on the catalyst forming a refractory material or become a hot spot source causing substrate deterioration. Factory reactivation or replacement is required.

Oxidation Catalyst Warranty & Limitation of Remedy & Liability

1. Johnson Matthey Environmental Products (JMEP), strictly for the period stated, warrants subject to all terms and conditions herein, that the catalyst furnished hereunder, when operated in accordance with the inlet conditions stated in attached TABLE I, shall provide minimum contaminant removal/destruction efficiency or not exceed maximum allowable unconverted contaminant concentration in the stack gas, as presented in TABLE I, whichever is less stringent. Any other performance curves submitted are for the Buyer's convenience and the performance indicated thereon is not offered by JMEP, nor to be construed by the Buyer as a proposal or contract obligation. The term "contaminant removal/destruction efficiency" shall be defined as that percentage of incoming hydrocarbon content oxidized to form carbon dioxide. Performance tests, if required, conducted at Purchaser's expense. Catalyst shall be considered accepted if tests show performance warranty has been fulfilled.

   - In the event the catalyst fails to perform as described in Paragraph 1 above, JMEP shall have the option of either; a) replacing FOB shipping point, the non-performing catalyst. B) providing FOB shipping point, additional catalyst. C) Make whatever repairs or modifications to the catalyst configuration it considers necessary to enable the catalyst to meet guarantees. The cost of providing such modifications, including materials, labor and engineering shall be borne by JMEP. Costs of installing modifications shall be borne by Buyer.

     In the event JMEP chooses to provide a replacement charge of catalyst, Buyer agrees to provide field installation for the new catalyst, return the original catalyst to JMEP and accept replacement catalyst as fulfillment of all obligations borne by JMEP and agrees to make no further demands.

     For the avoidance of doubt, the election by JMI of any of the above remedies shall not extend the warranty period.

3. The maximum liability of JMEP under this warranty shall not exceed the catalyst purchase price. JMEP, in no event shall be liable for production losses or indirect or consequential damages resulting from failure of catalyst to meet warranty.

4. The warranty period is Twelve (12) calendar months and shall commence from the date of initial start-up or from a date ninety (90) days after shipment, whichever date occurs first. Buyer agrees to promptly notify JMEP, in writing, as to the date of initial start-up.

5. a) The following contaminants are known catalyst deactivators and contribute to shortened catalyst life; heavy and base metals such as lead, mercury, arsenic, antimony, zinc, copper, tin, iron, nickel and chrome, sulfur and phosphorous. Hence the total content of these element(s) analyzed on the catalyst by quantitative methods must not exceed 10 grams/ft3 with the exceptions shown below in 5©. Contaminants in excess of these amounts shall void the warranty unless failure is due solely to defects in the equipment.

   b) Exposure to excessive temperatures significantly reduces catalyst life. Hence, at no time shall the catalyst outlet temperature be permitted to exceed 1250 F. Normal continuous operating temperature shall not exceed 1200 F for more than 15 minutes during any 24 hour period. Exposure to temperatures exceeding these values will automatically void the warranty. It is for this reason that the use of a high temperature alarm set for 1200 F and shutdown system set for 1250 F along with a temperature recorder is recommended.

   c) Chlorine containing compounds in the exhaust must not exceed 10 ppm. Silicon and fluorine containing compounds must be absent. Contaminants in excess of these amounts shall void the warranty.

   d) Periodic cleaning of particulates, etc., may be found necessary to maintain catalyst activity. If required, this shall not be construed as evidence of catalyst non-performance. Buyer shall conduct catalyst cleaning in strict accordance with JMEP procedure during warranty period.

6. Unit must be designed such that 1) no bypass around catalyst blocks or catalyst bed can occur, 2) blocks are oriented according to JM's recommendations, 3) flow is evenly distributed across catalyst bed. Failure to do so shall void the warranty.

7. Except as stated above, in the equipment warranty, and in the standard terms and conditions of sale, JMEP makes no other warranties, expressed or implied, including the implied warranties of merchantability and fitness for any particular purpose.

   - The foregoing is Seller's only obligation and Buyer's exclusive remedy for breach of warranty and, except for gross negligence, willful misconduct and remedies permitted under the performance, inspection and acceptance and the patent clauses hereof, the foregoing is Buyer's exclusive remedy against Seller for all claims arising hereunder or relating hereto whether such claims are based on breach of contract, (or) (including negligence and strict liability) or other theories.

     Buyer's failure to submit a claim as provided above shall specifically waive all claims based on latent defects. In no event shall Buyer be entitled to incidental or consequential damages. Any action arising hereunder or relating hereto whether based on breach of contract (or) (including negligence and strict liability) or other theories, must be commenced within one (1) year after the cause of action accrues or it shall be barred.

MECHANICAL DRAWINGS

Process & Instrumentation Diagram (P&ID)

General Arrangement Drawing

Oxidizer Installation & Mode Change Drawings

Catalyst Module Assembly Drawings & Instructions

LOGIC SEQUENCE

System Pre-Start –			
Step	**Display**	**Operator Action**	**Remarks**
1	No Message	Select Mode	Position air flow dampers to desired mode of operation. Refer to page 2-1 for temperature control set points.
1	No Message	Turn On Main Power	Once main power voltage and phase has been verified, engage power disconnect.
2	System Off Check E-Stop (Only when enabled)	Turn On Control Power & Pull E-Stop Switch Out. Press Reset (F4) to clear any alarms.	120VAC control power is applied to PLC outputs and other external devices. The following pre-start safe conditions must be met prior to the "System Ready to Start" state is achieved. -E-Stop -Control Power -Temperature Control Valve TCV-1, closed -Gas Train Blocking Valve, closed -Gas Pressure Switches satisfied -No General Alarms **Warning:** Prior to starting the oxidizer close all SVE well valves and fully open the SVE dilution valve. Confirm the SVE inlet dilution valve is full open. Failure to close the SVE wells can result in damage to equipment and can cause injury to personnel. **Warning:** High concentrations of hydrocarbons can cause detonation and damage to the equipment or injury to personnel. Only trained operators should be allowed to operate and adjust the system.

System Start-Up

Step	Display	Operator Action	Remarks
1	System Ready to Start	Push START Button (F1).	Operator may abort the start-up sequence by pressing the stop or reset on the operator display or the emergency stop button located on the exterior of the control panel. Automatic startup sequence is initiated. With no alarm condition present and all safe limits proven, the oxidizer fans are started.
2	Burner Enabled Flame Not Established	None. Automatic operation.	System purges for 30 seconds, controlled by flame safety programmer. The controls check to assure that; -System fan running contacts close -System air flow is proven -Gas pressure switches are satisfied -Catalyst dp is satisfied -Main fuel valve is proven closed -Main fuel blocking valve is proven closed -Temperature limits are satisfied Once air flow is proven and the purge timer has expired, the burner pilot gas valve is enabled and fuel is introduced to the pilot flame port. The burner ignition transformer is turned on and the spark igniter attempts to light the pilot flame. Once the burner pilot flame is established the spark ignition is disabled. The flame controller assures the flame stability as viewed from the burner control display 0-5VDC with 5 being the highest. Once the pilot flame UV signal is >1.25V for 10 seconds the main gas valves are opened and main gas supply is opened to the burner. Note: Verify air flow to the oxidizer is within maximum air flow requirements as viewed from the Operator Interface Terminal (OIT).
3	Burner On. Heating to Setpoint	None. Automatic	The firing rate valve modulates to drive and hold the oxidizer temperature to a field adjustable set point on the inlet temperature control device.

System Start-Up (Continued)

Step	Display	Operator Action	Remarks
4	Burner On. Soaking at Set Point	None Automatic	Once the minimum operating temperature is achieved on the inlet temperature controller (1350F Thermal)(550F Catalytic) a 120 second PLC timer is activated to allow the oxidizer to reach a steady state.

Putting the System On-Line

Step	Display	Operator Action	Remarks
1	Burner On System Inlet Open	None Automatic	Once the oxidizer automatic inlet damper is opened the oxidizer ready contacts to the SVE equipment is enabled. The customer running contact is proven closed and the dilution air damper control is enabled after a 15 second delay. Always open the manual dilution valve on the SVE and them slowly close over time. **Warning:** Open the SVE wells slowly. High concentrations can cause detonation and damage to the equipment or injury to personnel. Only trained operators should be allowed to operate and adjust the system.
2	Burner On System Inlet Open	None. Automatic operation.	The process inlet valve is fully open. The oxidizer is on-line.

System Shut-Down

1	Manual System Shut-down	Push SYSTEM STOP button (F2).	The oxidizer enters into the cool down mode. The cool down period is displayed on the operator interface. The burner is disabled and the oxidizer ready contacts are disabled.

System Stand-by (Disabled)			
1	Standby	Push Standby Button (F3)	Pressing the Standby button opens the automatic dilution valve. The oxidizer to system ready continues to be enabled and the SVE/AS alarm from others panel is ignored. Push Stand-by mode again to return to "Burner on System inlet open"

System Run Time			
Display	None	Push > Button on the operator display.	Press > to display system operating hours and other process data. To scroll down the process data press the > button a second time. A 20 second timer automatically resets screen.

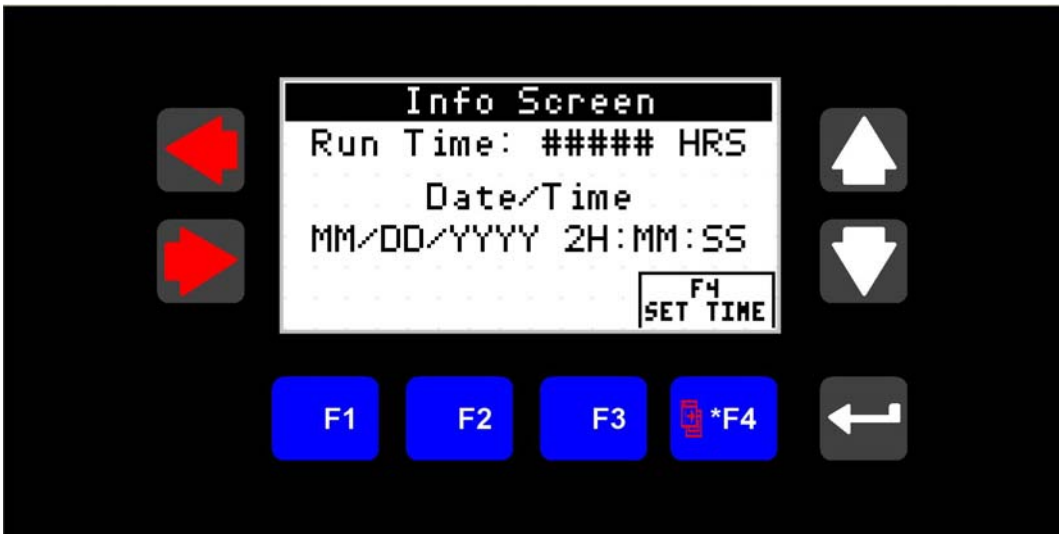

Alarm History			
Step	**Display**	**Operator Action**	**Remarks**
1	None.	Push Right Arrow button (>) Three times.	Press Right Arrow button to display system Alarm History(Figure 2) Screen display clears Alarm History after 10 seconds..

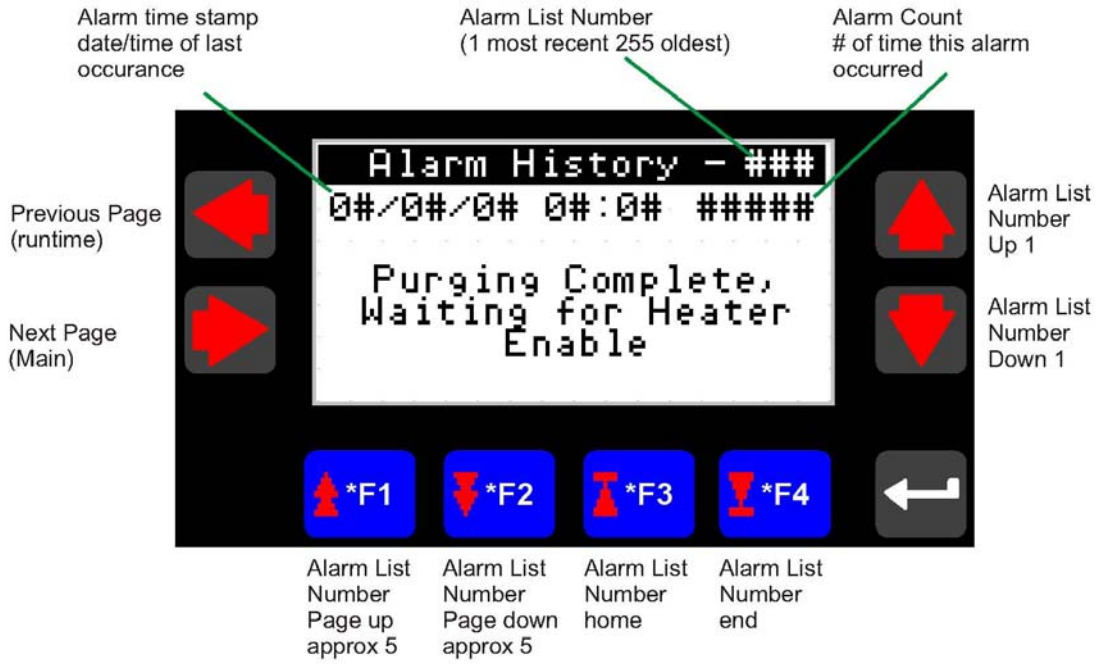

Alarm Conditions

Each of the following alarm conditions initiates 240 second cool-down. Exceptions are emergency stop and control power, which initiates a hard shutdown.

The alarm which first causes a shutdown is the one displayed. Subsequent faults are disregarded by the controls until the first alarm is cleared. Note: Some alarms may not be present in every system.

Display	Description	Operator Action
High L.E.L. After Correcting Fault, Press RESET.	The LEL monitor has detected an LEL in excess of setpoint in the process	Check for: -Proper calibration of LEL sensor -Proper dilution operation.
High Inlet Temperature After Correcting Fault, Press RESET.	The inlet temperature has risen above the alarm setpoint. Excess temperature can damage or destroy the catalyst. It can also damage the reactor or scrubber if equipped.	Check for: - Malfunctioning firing rate actuator, loose or broken linkage. - Proper setup, function of inlet temperature control loop. -Proper air flow rate
High Outlet Temperature After Correcting Fault, Press RESET.	The combustion chamber or catalyst outlet temperature has risen above the alarm setpoint. Excess temperature can damage or destroy the catalyst. It can also damage the reactor or scrubber.	Check for: - Malfunctioning dilution air actuator, loose or broken linkage. - Proper setup, function of outlet temperature control loop. - High solvent loading in process air stream.
System Operating Temperature Lost, Press RESET.	Once the system operating temperature is reached a 10 minute timer is enabled to allow the system to recover and reach operating temperature.	Check for: -Low inlet gas pressure. -Proper air flow rate. -Malfunctioning firing rate actuator, loose or broken linkage.
System Ready Temperature Not Reach, Press RESET.	Once the system is enabled it has 60 minutes to reach operating temperature.	Check for: Low inlet gas pressure. -Proper air flow rate. -Malfunctioning firing rate actuator or broken linkage.

Alarm Conditions (continued)

Display	**Description**	**Operator Action**
System or Combustion Air Blower is not in Automatic Position	Operator is required to place these switches in the (A) auto position prior to enabling the system.	Check for: -Proper switch position.
High Water Level. After Correcting Fault, Press RESET.	High water level in the knock-out pot.	Check for: -Drain the knock-out pot.
System Blower Motor Off. After Correcting Fault, Press RESET.	The oxidizer blower motor starter has failed to energize on startup or has opened while the motor was running.	Check for: - Contactor failure. -Motor overload. - Fan obstruction. - Seized fan or motor bearings.
System Air Pressure Switch Not Closed. After Correcting Fault, Press RESET.	The oxidizer air proving switch has failed to close on startup or has opened after airflow was proven.	Check for: - Airflow restriction, such as a closed damper or debris. - Plugged airflow sensing tubing. - System fan malfunction.
Combustion Blower Air Switch Not Closed. After Correcting Fault, Press RESET.	The combustion blower air proving switch has failed to close on startup or has opened after airflow was proven.	Check for: - Airflow restriction, such as a closed damper or debris. - Plugged airflow sensing tubing. - System fan malfunction.
Combustion Blower Motor Off After Correcting Fault, Press RESET.	The combustion blower motor starter/overload has failed to energize on startup or has opened while the motor was running.	Check for: - Contactor failure. -Motor overload. - Fan obstruction. - Seized fan or motor bearings
Catalyst Differential Pressure Switch not Closed. After Correcting Fault, Press RESET.	The differential pressure across the catalyst has risen above the set-point of the proving switch.	Check for: - Excess airflow through the oxidizer. - Catalyst fouling. - Plugged airflow sensing tubing.

Alarm Conditions (continued)

Display	Description	Operator Action
Flame Failure. After Correcting Fault, Press RESET.	The Honeywell flame safety programmer (FSG) has detected a fault condition. Requires manual reset of FSG located on control panel interior.	Check for: -UV Scanner operating properly. -Improper gas pressure -Malfunctioning spark igniter
Low Gas Pressure. After Correcting Fault, Press RESET.	Low inlet gas pressure has been detected.	Check for: -Gas supply valves closed. -Improper switch setting. -Faulty main gas regulator.
High Gas Pressure. After Correcting Fault, Press RESET.	High gas pressure has been detected.	Check for: -Gas supply valves closed. -Faulty main gas regulator. -Improper switch setting.
Dilution Valve Not Open. After Correcting Fault, Press RESET.	Dilution Valve has not been proven open.	Check for: -dilution valve limit switch adjustment.
System Inlet Valve Not Closed. After Correcting Fault, Press RESET.	Inlet Valve has not been proven closed.	Check for: -inlet damper limit switch adjustment.
Power Failure. After Correcting Fault, Press RESET.	Power supply has been interrupted	Check for: -Tripped breaker(s) -Main power switch turned off
System Ready Temperature not Reached After Correcting Fault, Press RESET.	System did not reach operating temperature in allotted time	Check for: -Burner output -Air flow is correct -Ready temp setting is correct
Main Gas Valve Open After Correcting Fault, Press RESET.	Burner firing rate valve is not proven closed	Check for: -Maxon Micro Ratio valve is in closed position -Valve/ actuator linkage is intact -HW limit switch is adjusted properly
Chart Recorder No Data After Correcting Fault, Press RESET.	The Chart recorder SD card has been removed, or the recorder has lost power	Check for: -SD card is installed properly in recorder -verify recorder power supply

Alarm Conditions (continued)

Display	Description	Operator Action
SVE/AS Fault After Correcting Fault, Press RESET.	Once the oxidizer controls enable the SVE/AS system, a 60 min delay timer is started. This alarm will be enabled if the running contact from others system is not realized prior to timeout.	Check for: -Signal from SVE/AS or other control panel - Check SVE/AS control panel for indicated fault(s)
Aux Interrupt Fault After Correcting Fault, Press RESET.	Auxiliary interlock contacts are provided for customer use if desired.	Check for: -Panel faults on others panel -Jumper is in place if these contacts are not being used
Flame Arrestor Outlet High Temp. After Correcting Fault, Press RESET.	The flame arrestor outlet temperature has exceed the setpoint	Check for: -Proper setup, function of F.A. outlet temperature control loop. -SVE discharge is within limits
VFD Fault After Correcting Fault, Press RESET.	The System fan VFD has indicated a fault	Check for: -fault message on VFD - Fan obstruction. - Seized fan or motor bearings
Heat Exchanger Sparge Switch not in Auto After Correcting Fault, Press RESET.	Operator is required to place the Heat Exchanger HOA switch in the (A) auto position prior to enabling the system.	Check for: -Proper switch position.
Heat Exchanger Sparge Air High Temperature After Correcting Fault, Press RESET.	The heat exchange inlet temperature has risen above the alarm setpoint. Excessive temperature can damage the HX	Check for: - Malfunctioning sparge air actuator, loose or broken linkage. - Proper setup, function of HX inlet temperature control loop. -Proper air flow rate
Heat Exchanger Blower Motor Off After Correcting Fault, Press RESET.	The HX sparge blower motor starter has failed to energize on startup or has opened while the motor was running.	Check for: - Contactor failure. -Motor overload. - Fan obstruction. - Seized fan or motor bearings.

ELECTRICAL DRAWINGS

CONTROLLER SET POINTS

Inlet Temperature Control (TIC-1)

Group Prompt	Function Prompt	Value or Selection	Factory Setting
TUNING	PB or GAIN	PB 15	1.0
	RATE T	0.00	0.00
	I MIN or I RPM	1.0	1.0
	MANRST	Not Used	1.0
	PB2 or GAIN 2	Not Used	0.0
	RATE2T	Not Used	0.00
	I2 MIN or I2 RPM	Not Used	1.0
	CYCT1 or CT1	Not Used	20
	X3	Not Used	20
	CYC2T2 or CT2	Not Used	20
	X3	Not Used	20
	SECUR	Not Used	0
	LOCK	NONE	NONE
	AUTOMA	ENAB	ENAB
	A TUNE	ENAB	ENAB
	RN HLD	ENAB	ENAB
	SP SEL	ENAB	ENAB

Group Prompt	Function Prompt	Value or Selection	Factory Setting
SPRAMP	SPRAMP	DIS	DIS
	TI MIN	Not Used	3
	FINLSP	Not Used	1000
	SPRATE	ENAB	DIS
	EUHRUP	8400	0
	EUHRDN	0	0
	SPPROG	DIS	DIS

Group Prompt	Function Prompt	Value or Selection	Factory Setting
ATUNE	FUZZY	ENAB	DIS
	TUNE	DIS	TUNE
	DUPLEX	Not Used	MAN
	AT ERR	Not Used	---

Group Prompt	Function Prompt	Value or Selection	Factory Setting
OUTLAG	OUTLAG	CUR	(MOXL)
	4-20RG	Not Used	100
	CRANGE	4-20	4-20
	RLY TY	Not Used	MECH
	MTRT1	Not Used	5

Group Prompt	Function Prompt	Value or Selection	Factory Setting
INPUT1	IN1TYP	KH	KH
	XMITR1	Not Used	LIN
	IN1 HI	2400	2400
	IN1 LO	0	0
	RATIO1	1.0	1.00
	BIAS1	0.0	0.0
	FILTR1	5	1.0
	BRNOUT	UP	UP
	EMIS	Not Used	1.0

Group Prompt	Function Prompt	Value or Selection	Factory Setting
INPUT2	IN2TYP	Not Used	1-5V
	LIN	Not Used	LIN
	IN2 HI	Not Used	2400
	IN2 LO	Not Used	0
	RATIO2	Not Used	1.00
	BIAS 2	Not Used	0.0
	FILTR2	Not Used	1.0

Inlet Temperature Control (continued)

Group Prompt	Function Prompt	Value or Selection	Factory Setting
CONTRL	PIDSET	ONE	ONE
	SW VAL	Not Used	0.00
	LSP'S	TWO	ONE
	RSPSRC	NONE	NONE
	SP TRK	NONE	NONE
	PWR UP	ALSP	AUTO
	PWROUT	LAST	FSAF
	SP Hi	1600	2400
	SP Lo	0	0
	ACTION	REV	REV
	OUT Hi	100	100
	OUT Lo	0	0
	D BAND	2.0	2.0
	HYST	0.5	0.5
	FAILSF	0	0.0
	FSMODE	LATCH	NOL
	PBorGN	PB	GAIN
	MINRPM	RPM	MIN

Group Prompt	Function Prompt	Value or Selection	Factory Setting
OPTION	AUXOUT	IN1	DIS
	ARANGE	4-20	4-20
	0 PCT	0	0
	100 PCT	2000	100
	DIG IN 1	SP2	NONE
	DIG1 COM	DIS	DIS
	DIG IN 2	NONE	NONE
	DIG2 COM	DIS	DIS

Group Prompt	Function Prompt	Value or Selection	Factory Setting
COM	ComADR	Not Used	Disable
	COMSTA	Not Used	0
	IRENAB	Not Used	Enable
	BAUD	Not Used	9600
	TX_DLY	Not Used	30
	WS_FLT	Not Used	FP_B
	SDENAB	Not Used	Enable
	SHDTIM	Not Used	0
	SDMODE	Not Used	Last
	SHD_SP	Not Used	LSP
	UNITS	Not Used	PCT
	CSRATO	Not Used	1.0
	CSP_BI	Not Used	0
	LOOPBACK	Not Used	Disable

Group Prompt	Function Prompt	Value or Selection	Factory Setting
ALARMS	A1S1TY	IN1	NONE
	A1S1VA	1600	90
	A1S1HL	HIGH	HIGH
	A1S1EV	Not Used	BEGN
	A1S2TY	NONE	NONE
	A1S2VA	Not Used	90
	A1S2HL	Not Used	HIGH
	A1S2EV	Not Used	BEGN
	A2S1TY	IN1	NONE
	A2S1VA	1350	90
	A2S1HL	HIGH	HIGH
	A2S1EV	Not Used	BEGN
	A2S2TY	NONE	NONE
	A2S2VA	Not Used	90
	A2S2HL	Not Used	HIGH
	A2S2EV	Not Used	BEGN
	ALHYST	0.1	0.0
	ALARM1	NOL	NOL
	BLOCK	DIS	DIS
	DIAGL	DIS	DIS

Inlet Temperature Control (continued)

Group Prompt	Function Prompt	Value or Selection	Factory Setting
DISPLY	DECMAL	NONE	NONE
	UNITS	F	F
	FREQ	60	60
	LDSPLY	ENABLE	ENABLE
	DISPLY	1400	SP
	2nd SP	70	2L
	LNGUAG	ENGL	ENGL

Notes:

1) Controller should be set to the automatic position. To change between the manual and automatic position, depress the M-A/Reset Button and observe the M or A indicated on the right middle area of the screen.

2) Enter in the Set Point temperature by pushing the Lower Display button until SP appears in lower left corner. SP should read 1400. 2nd Set Point (2L) should read 70.

3) Read Status: Skip

4) Program control setup before tuning setup.

Outlet Temperature Control (TIC-2)

Group Prompt	Function Prompt	Value or Selection	Factory Setting
TUNING	PB or GAIN	PB 15	1.0
	RATE T	0.00	0.00
	I MIN or I RPM	1.0	1.0
	MANRST	Not Used	1.0
	PB2 or GAIN 2	Not Used	0.0
	RATE2T	Not Used	0.00
	I2 MIN or I2 RPM	Not Used	1.0
	CYCT1 or CT1	Not Used	20
	X3	Not Used	20
	CYC2T2 or CT2	Not Used	20
	X3	Not Used	20
	SECUR	Not Used	0
	LOCK	NONE	NONE
	AUTOMA	ENAB	ENAB
	A TUNE	DIS	ENAB
	RN HLD	DIS	ENAB
	SP SEL	DIS	ENAB

Group Prompt	Function Prompt	Value or Selection	Factory Setting
SPRAMP	SPRAMP	DIS	DIS
	TI MIN	Not Used	3
	FINLSP	Not Used	1000
	SPRATE	DIS	DIS
	EUHRUP	Not Used	0
	EUHRDN	Not Used	0
	SPPROG	Not Used	DIS

Group Prompt	Function Prompt	Value or Selection	Factory Setting
ATUNE	FUZZY	ENAB	DIS
	TUNE	DIS	TUNE
	DUPLEX	Not Used	MAN
	AT ERR	Not Used	---

Group Prompt	Function Prompt	Value or Selection	Factory Setting
ALGOR	CTRALG	PIDA	PIDA
	TIMER	DIS	DIS
	PERIOD	Not Used	0:01
	START	Not Used	KEY
	L DISP	Not Used	TREM
	RESET	Not Used	KEY
	INCRMT	Not Used	MIN

Group Prompt	Function Prompt	Value or Selection	Factory Setting
OUTLAG	OUTLAG	CUR	(MOXL)
	4-20RG	Not Used	100
	CRANGE	4-20	4-20
	RLY TY	MECH	MECH
	MTRT1	5	5

Group Prompt	Function Prompt	Value or Selection	Factory Setting
INPUT1	IN1TYP	KH	KH
	XMITR1	Not Used	LIN
	IN1 HI	2400	2400
	IN1 LO	0	0
	RATIO1	1.0	1.00
	BIAS1	0.0	0.0
	FILTR1	5	1.0
	BRNOUT	UP	UP
	EMIS	1.0	1.0

Group Prompt	Function Prompt	Value or Selection	Factory Setting
INPUT2	IN2TYP	Not Used	1-5V
	LIN	Not Used	LIN
	IN2 HI	Not Used	2400
	IN2 LO	Not Used	0
	RATIO2	Not Used	1.00
	BIAS 2	Not Used	0.0
	FILTR2	Not Used	1.0

Outlet Temperature Control
(continued)

Group Prompt	Function Prompt	Value or Selection	Factory Setting
CONTRL	PIDSET	ONE	ONE
	SW VAL	Not Used	0.00
	LSP'S	ONE	ONE
	RSPSRC	NONE	NONE
	SP TRK	NONE	NONE
	PWR UP	ALSP	AUTO
	PWROUT	LAST	FSAF
	SP Hi	1600	2400
	SP Lo	0	0
	ACTION	REV	REV
	OUT Hi	100	100
	OUT Lo	0	0
	D BAND	2.0	2.0
	HYST	0.5	0.5
	FAILSF	0.0	0.0
	FSMODE	LATCH	NOL
	PBorGN	PB	GAIN
	MINRPM	RPM	MIN

Group Prompt	Function Prompt	Value or Selection	Factory Setting
OPTION	AUXOUT	IN1	DIS
	ARANGE	4-20	4-20
	0 PCT	0	0
	100 PCT	1600 or 2000	100
	DIG IN 1	NONE	NONE
	DIG1 COM	DIS	DIS
	DIG IN 2	NONE	NONE
	DIG2 COM	DIS	DIS

Group Prompt	Function Prompt	Value or Selection	Factory Setting
COM	ComADR	Not Used	Disable
	COMSTA	Not Used	0
	IRENAB	Not Used	Enable
	BAUD	Not Used	9600
	TX_DLY	Not Used	30
	WS_FLT	Not Used	FP_B
	SDENAB	Not Used	Enable
	SHDTIM	Not Used	0
	SDMODE	Not Used	Last
	SHD_SP	Not Used	LSP
	UNITS	Not Used	PCT
	CSRATO	Not Used	1.0
	CSP_BI	Not Used	0
	LOOPBACK	Not Used	Disable

Group Prompt	Function Prompt	Value or Selection	Factory Setting
ALARMS	A1S1TY	NONE	NONE
	A1S1VA	Not Used	90
	A1S1HL	Not Used	HIGH
	A1S1EV	Not Used	BEGN
	A1S2TY	NONE	NONE
	A1S2VA	Not Used	90
	A1S2HL	Not Used	HIGH
	A1S2EV	Not Used	BEGN
	A2S1TY	NONE	NONE
	A2S1VA	Not Used	90
	A2S1HL	Not Used	HIGH
	A2S1EV	Not Used	BEGN
	A2S2TY	NONE	NONE
	A2S2VA	Not Used	90
	A2S2HL	Not Used	HIGH
	A2S2EV	Not Used	BEGN
	ALHYST	0.1	0.0
	ALARM1	NOL	NOL
	BLOCK	DIS	DIS
	DIAGL	DIS	DIS

Outlet Temperature Control
(continued)

Group Prompt	Function Prompt	Value or Selection	Factory Setting
DISPLY	DECMAL	NONE	NONE
	UNITS	F	F
	FREQ	60	60
	NOLDSP	DIS	DIS
	DISPLY	1450	SP
	LNGUAG	ENGL	ENGL

Notes:

1) Controller should be set to the automatic position. To change between the manual and automatic position, depress the M-A/Reset Button and observe the M or A indicated on the right middle area of the screen.

2) Enter in the Set Point temperature by pushing the Lower Display button until SP appears in lower left corner. SP should read 1450.

3) Read Status: Skip

4) Program control setup before tuning setup.

HX Inlet Temp Control (TIC-6)

Group Prompt	Function Prompt	Value or Selection	Factory Setting
TUNING	PB or GAIN	PB 15	1.0
	RATE T	0.00	0.00
	I MIN or I RPM	1.0	1.0
	MANRST	Not Used	1.0
	PB2 or GAIN 2	Not Used	0.0
	RATE2T	Not Used	0.00
	I2 MIN or I2 RPM	Not Used	1.0
	CYCT1 or CT1	Not Used	20
	X3	Not Used	20
	CYC2T2 or CT2	Not Used	20
	X3	Not Used	20
	SECUR	Not Used	0
	LOCK	NONE	NONE
	AUTOMA	ENAB	ENAB
	A TUNE	ENAB	ENAB
	RN HLD	ENAB	ENAB
	SP SEL	ENAB	ENAB

Group Prompt	Function Prompt	Value or Selection	Factory Setting
SPRAMP	SPRAMP	DIS	DIS
	TI MIN	Not Used	3
	FINLSP	Not Used	1000
	SPRATE	DIS	DIS
	EUHRUP	0	0
	EUHRDN	0	0
	SPPROG	DIS	DIS

Group Prompt	Function Prompt	Value or Selection	Factory Setting
ATUNE	FUZZY	ENAB	DIS
	TUNE	DIS	TUNE
	DUPLEX	Not Used	MAN
	AT ERR	Not Used	---

Group Prompt	Function Prompt	Value or Selection	Factory Setting
ALGOR	CTRALG	PIDA	PIDA
	TIMER	DIS	DIS
	PERIOD	Not Used	0:01
	START	Not Used	KEY
	L DISP	Not Used	TREM
	RESET	Not Used	KEY
	INCRMT	Not Used	MIN

Group Prompt	Function Prompt	Value or Selection	Factory Setting
OUTLAG	OUTLAG	CUR	(MOXL)
	4-20RG	Not Used	100
	CRANGE	4-20	4-20
	RLY TY	Not Used	MECH
	MTRT1	Not Used	5

Group Prompt	Function Prompt	Value or Selection	Factory Setting
INPUT1	IN1TYP	KH	KH
	XMITR1	Not Used	LIN
	IN1 HI	2400	2400
	IN1 LO	0	0
	RATIO1	1.0	1.00
	BIAS1	0.0	0.0
	FILTR1	5	1.0
	BRNOUT	UP	UP
	EMIS	1.0	1.0

Group Prompt	Function Prompt	Value or Selection	Factory Setting
INPUT2	IN2TYP	Not Used	1-5V
	LIN	Not Used	LIN
	IN2 HI	Not Used	2400
	IN2 LO	Not Used	0
	RATIO2	Not Used	1.00
	BIAS 2	Not Used	0.0

HX Inlet Temp Control (continued)

Group Prompt	Function Prompt	Value or Selection	Factory Setting
CONTRL	PIDSET	ONE	ONE
	SW VAL	Not Used	0.00
	LSP'S	ONE	ONE
	RSPSRC	NONE	NONE
	SP TRK	NONE	NONE
	PWR UP	ALSP	AUTO
	PWROUT	LAST	FSAF
	SP Hi	1600	2400
	SP Lo	0	0
	ACTION	DIR	REV
	OUT Hi	100	100
	OUT Lo	0	0
	D BAND	2.0	2.0
	HYST	0.5	0.5
	FAILSF	0	0.0
	FSMODE	LATCH	NOL
	PBorGN	PB	GAIN
	MINRPM	RPM	MIN

Group Prompt	Function Prompt	Value or Selection	Factory Setting
OPTION	AUXOUT	IN1	DIS
	ARANGE	4-20	4-20
	0 PCT	0	0
	100 PCT	2000	100
	DIG IN 1	NONE	NONE
	DIG1 COM	DIS	DIS
	DIG IN 2	NONE	NONE
	DIG2 COM	DIS	DIS

Group Prompt	Function Prompt	Value or Selection	Factory Setting
COM	ComADR	Not Used	Disable
	COMSTA	Not Used	0
	IRENAB	Not Used	Enable
	BAUD	Not Used	9600
	TX_DLY	Not Used	30
	WS_FLT	Not Used	FP_B
	SDENAB	Not Used	Enable
	SHDTIM	Not Used	0
	SDMODE	Not Used	Last
	SHD_SP	Not Used	LSP
	UNITS	Not Used	PCT
	CSRATO	Not Used	1.0
	CSP_BI	Not Used	0
	LOOPBACK	Not Used	Disable

Group Prompt	Function Prompt	Value or Selection	Factory Setting
ALARMS	A1S1TY	NONE	NONE
	A1S1VA	Not Used	90
	A1S1HL	Not Used	HIGH
	A1S1EV	NotUsed	BEGN
	A1S2TY	NONE	NONE
	A1S2VA	Not Used	90
	A1S2HL	Not Used	HIGH
	A1S2EV	Not Used	BEGN
	A2S1TY	IN 1	NONE
	A2S1VA	1550	90
	A2S1HL	HIGH	HIGH
	A2S1EV	Not Used	BEGN
	A2S2TY	NONE	NONE
	A2S2VA	Not Used	90
	A2S2HL	Not Used	HIGH
	A2S2EV	Not Used	BEGN
	ALHYST	0.1	0.0
	ALARM1	NOL	NOL
	BLOCK	DIS	DIS
	DIAGL	DIS	DIS

HX Inlet Temp Control (continued)

Group Prompt	Function Prompt	Value or Selection	Factory Setting
DISPLY	DECMAL	NONE	NONE
	UNITS	F	F
	FREQ	60	60
	NOLDSP	DIS	DIS
	DISPLY	1450	SP
	LNGUAG	ENGL	ENGL

Notes:

5) Controller should be set to the automatic position. To change between the manual and automatic position, depress the M-A/Reset Button and observe the M or A indicated on the right middle area of the screen.

6) Enter in the Set Point temperature by pushing the Lower Display button until SP appears in lower left corner. SP should read 1450.

7) Read Status: Skip

8) Program control setup before tuning setup.

High Limit Temp Control

Group Prompt	Function Prompt	Value or Selection	Factory Setting
LOCK	SECUR	0	DIS
	LOCK	NONE	CAL

Group Prompt	Function Prompt	Value or Selection	Factory Setting
LIMIT	LOW or HIGH	HIGH	HIGH
	POWRUP	NORM	NORM
	SP MAX	1750	1000
	SP MIN	0	0
	DISPLY	PROC	PROC

Group Prompt	Function Prompt	Value or Selection	Factory Setting
INPUT1	IN1TYP	KH	KH
	XMITR1	_	LIN
	IN1 HI	2000	2400
	IN LO	0	1.00
	BIAS1	0	0.0
	FILTR1	5	1.0
	BRNOUT	UP	UP

Group Prompt	Function Prompt	Value or Selection	Factory Setting
OPTIONS	AUXOUT	PROC	DIS
	0 PCT	0	0
	100 PCT	2000	100
	CRANGE	4-20	4-20
	DIGIN 1	ENAB	DIS

Group Prompt	Function Prompt	Value or Selection	Factory Setting
COM	ComADR	3	3
	ComSTA	DIS	DIS
	IRENAB	ENAB	ENAB
	BAUD	19.2K	19.2K
	TX DLY	1	30
	WS FLT	Not Used	FP_B
	UNITS	PCT	PCT
	LOOPBK	Not Used	DIS

Group Prompt	Function Prompt	Value or Selection	Factory Setting
ALARMS	A1S1TY	NONE	NONE
	A1S1VA	Not Used	90
	A1S1HL	Not Used	HIGH
	A1S2TY	NONE	NONE
	A1S2VA	Not Used	90
	A1S2HL	Not Used	HIGH
	A2S1TY	NONE	NONE
	A2S1VA	Not Used	90
	A2S1HL	Not Used	HIGH
	A2S2TY	NONE	NONE
	A2S2VA	Not Used	90
	A2S2HL	Not Used	HIGH
	ALHYST	0.1	0.0
	ALARM1	NOL	NOL
	BLOCK	DIS	DIS
	DIAGL	DIS	DIS

High Limit Temperature Control
(continued)

Group Prompt	Function Prompt	Value or Selection	Factory Setting
DISPLY	DECMAL	NONE	NONE
	UNITS	F	F
	FREQ	60	60
	LWRDSP	ENAB	DIS
	SP	1650	0
	LNGUAG	ENGL	ENGL

Notes:

1. Controller should be set to the automatic position. To change between the manual and automatic position, depress the M-A/Reset Button and observe the M or A indicated on the right middle area of the screen.

2. Enter in the Set Point temperature by pushing the Lower Display button until SP appears in lower left corner. SP should read 1650.

3. Read Status: Skip

ABB Chart Recorder Settings

The ABB Chart Recorder may be programmed manually, or by loading the program from the removable SD Card used to store logged information.

The SD Card supplied with the unit has a copy of the program settings for the chart recorder that may be used to restore settings, or to program an identical replacement controller. No documentation for manually programmed settings is currently available.

An additional copy of these settings is stored on the CD ROM that accompanies this manual. The program is a configuration file located in a folder labeled "VRD". The program must reside in a folder Labeled VRD to be recognized by the chart recorder.

Follow instructions within the ABB Chart recorder manual, or contact Intellishare Environmental for assistance, if reprogramming is necessary.

ABB Software – Datamanager & Emulation

To install ABB emulation Software and Data Manager software - Follow steps 1, 2, & 3. This software is furnished by ABB and is supplied on the CD ROM that accompanies this manual.

To install ABB Data Manager software only - Follow step 3. (Data Manager takes stored data from the chart recorder data files, verifies file integrity, and converts to Excel format)

Step 1) Install WINDOWS CE 5.0 Emulation software - Open CE 5.0 emulator file and double click (Setup.exe). Follow setup instructions and accept the license agreement.

Step 2) Install SM500 Emulation Software - Open ABB Software double click on DM.EXE A full screen window will pop up. Select SM500F. Follow setup instructions and accept the license agreement.

Step 3) Install Data Manager software - Open ABB Software double click on DM.EXE A full screen window will pop up. Select Install Data Manager Software. Follow setup instructions and accept the license agreement.

View Instruction Manuals in folder - SM500 Documentation

See an excerpt describing the chart recorder from the SM 500 Manual on the following page.

General Information

When power is first applied to the instrument, its processor carries out a number of self-tests and displays the start-up screen.

At the end of the start-up sequence, the instrument displays the Operator View that was being displayed
when the instrument was powered down.

The instrument is operated via the Operator Keys located below the screen.

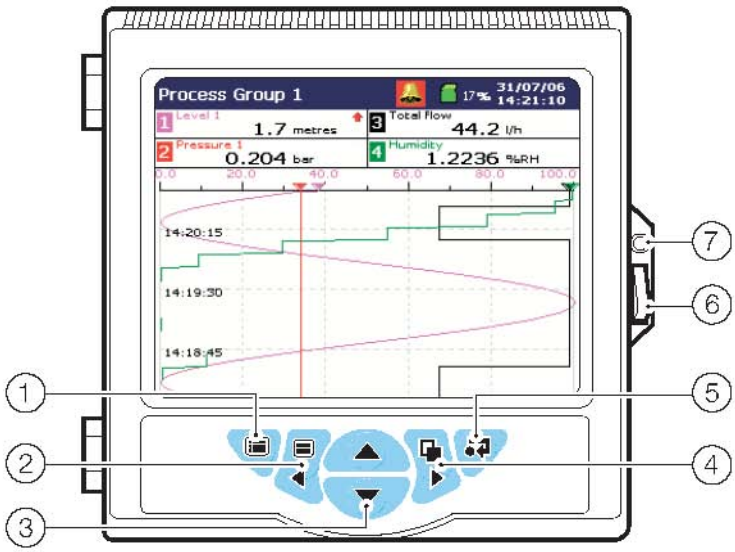

Fig. 4.1 Operator Keys and Door Features

Referring to Fig. 4.1, operator keys and door features are located as follows:

1. Menu Key – Displays or hides the context-sensitive operator menu associated with each view. Also cancels the menu without making a change or returns to the previous menu level.
2. Group Key – Selects a different process group or

   Left Key – Scroll left.
3. / Up/Down Keys – Highlights menu items and scrolls through previously recorded data.
4. View Key – Selects a different process view or log or

   Right Key – Scroll right.
5. Enter Key – Selects the highlighted menu item. If 'Screen Capture' is set to 'Enabled' during configuration and external archive media is inserted in the instrument, the operator can save a snapshot of any operator view to the external media if pressed when an operator menu is not displayed.
6. Door Release.
7. Door Lock (optional).

Programming SM500 using PC (Emulator)

This section details programming the instrument manually using the pc and copying the file to an SD card and loading into the instrument.

Start the SM500 Emulator from Windows/Start menu on the PC and perform the following steps on the menu:

Programming:

Emulator
MENU button
    Configuration
        Operator1
            OK
                Edit Current Config
                    Menu button
                        Common Config
                            Setup Tab
                            - number of groups = 1
                            - Instrument tag = Oxidizer
                            Screen Tab
                                screen saver wait time = 2hrs
                            Time Tab
                                MM/DD/YY
                        Group Configuration
                            Recording Tab
                                Tag = Oxidizer1
                            Chart Tab
                                Chart View Enable = horizontal
                                Screen interval = 25min
                            Archive Tab
                                Archive File enables: *.d, *.a
                                Filename Tag: Oxidizer Data
                                New file interval: monthly
                        Channels 1.1-1.4
                            1.1
                                Analog I/P A1 Tab
                                Input type: T/C
                                Engineering Range: set to device
                                Tag: Inlet, Outlet, or LEL
                                Broken Sensor: upscale if T/C
                                Do the same for other channels

Menu out until it prompts to "Save Current Configuration".
    * note where file is saved

You will be at the Emulator chart Screen (showing process values)

Menu Button
Logging
On-line (checked)
Recording Control
Primary

Copy File to SD Card

To copy the file to the SD card and move it to the instrument, perform the following:

Put the SD card into an SD slot on the PC or into and SD card reader attached to the PC

Navigate to the SD Card
- create folder "VRD"
- copy and paste .cfg file from the emulator to the SD card

Move file to the Chart Recorder

Place SD card in recorder
- go online or wait, it will automatically go online (Normal Operation)
- go to Logging and check offline (before dumping program off card onto Internal memory)
- go to MENU
  Configuration
  Operator
  OK
  Open a Configuration
  Choose External Storage
  Highlight desired program (on SD card) Press enter
  Press MENU button and select Save as Current Configuration

Retrieve Data from Recorder to Card

To retrieve data (stored on the SD card) from the instrument perform the following:

Menu button
Logging
Offline
-Verify the red light is of on the back of the recorder
Remove card

View Data Recorded to the SD Card

- Install SD card in computer
- start Microsoft Excel software (Datamanager software must be installed prior to this)
- select the "open CSV" file icon
- select "View Chart" icon

Process Flow Sensor Calculation Information

Pitot Tube Location:	Process Fan Outlet
Pitot Tube Model Number:	DS-300-10
DP Transmitter Scale:	0-5” w.c.
Duct Diameter:	10”
Flow Coefficient:	0.70
Site Elevation:	500 ft
Assumed Barometric Pressure:	14.45 PSIG
Assumed Temperature:	120˚ F.
Duct Pressure:	12” w.c.

Process Flow Sensor Conversion Table

Diff Press in. W.C.	SCFM	Diff Press in. W.C.	SCFM
0.1	475	1.6	1910
0.2	675	1.7	1968
0.3	827	1.8	2025
0.4	955	1.9	2080
0.5	1067	2.0	2134
0.6	1169	2.1	2187
0.7	1263	2.2	2240
0.8	1350	2.3	2289
0.9	1432	2.4	2338
1.0	1509	2.5	2386
1.1	1583	2.75	2503
1.2	1653	3.0	2614
1.3	1721	3.5	2824
1.4	1786	4.0	3020
1.5	1850	5.0	3400

Heat Exchanger Air Sparge Flow Sensor Calculation Information

Pitot Tube Location:	Fan Exhaust
Pitot Tube Model Number:	DS-300-4
Magnehelic Gauge Scale:	0-3” w.c.
Duct Diameter:	4”
Flow Coefficient:	0.665
Site Elevation:	500’
Assumed Barometric Pressure:	14.45 PSIG
Assumed Temperature:	70˚ F.
Duct Static Pressure:	8” w.c.

Heat Exchanger Flow Sensor Conversion Table

Differential Pressure	**SCFM**
.1	73
.2	103
.3	125
.4	145
.5	165
.75	204
1	235
1.25	264
1.5	290
1.75	312
2	335
2.5	373
2.75	390
3	410

APPENDIX E

Graphical User Interface Manuals

Hardware User Manual

EA-USER-M

WARNING

Thank you for purchasing automation equipment from **Automationdirect.com®**, doing business as, **AutomationDirect**. We want your new automation equipment to operate safely. Anyone who installs or uses this equipment should read this publication (and any other relevant publications) before installing or operating the equipment.

To minimize the risk of potential safety problems, you should follow all applicable local and national codes that regulate the installation and operation of your equipment. These codes vary from area to area and usually change with time. It is your responsibility to determine which codes should be followed, and to verify that the equipment, installation, and operation is in compliance with the latest revision of these codes.

At a minimum, you should follow all applicable sections of the National Fire Code, National Electrical Code, and the codes of the National Electrical Manufacturer's Association (NEMA). There may be local regulatory or government offices that can also help determine which codes and standards are necessary for safe installation and operation.

Equipment damage or serious injury to personnel can result from the failure to follow all applicable codes and standards. We do not guarantee the products described in this publication are suitable for your particular application, nor do we assume any responsibility for your product design, installation, or operation.

Our products are not fault-tolerant and are not designed, manufactured or intended for use or resale as on-line control equipment in hazardous environments requiring fail-safe performance, such as in the operation of nuclear facilities, aircraft navigation or communication systems, air traffic control, direct life support machines, or weapons systems, in which the failure of the product could lead directly to death, personal injury, or severe physical or environmental damage ("High Risk Activities"). **AutomationDirect** specifically disclaims any expressed or implied warranty of fitness for High Risk Activities.

For additional warranty and safety information, see the Terms and Conditions section of our catalog. If you have any questions concerning the installation or operation of this equipment, or if you need additional information, please call us at 770-844-4200.

This publication is based on information that was available at the time it was printed. At **AutomationDirect** we constantly strive to improve our products and services, so we reserve the right to make changes to the products and/or publications at any time without notice and without any obligation. This publication may also discuss features that may not be available in certain revisions of the product.

Trademarks

This publication may contain references to products produced and/or offered by other companies. The product and company names may be trademarked and are the sole property of their respective owners. **AutomationDirect** disclaims any proprietary interest in the marks and names of others.

Copyright 2005-2009, Automationdirect.com® Incorporated
All Rights Reserved

No part of this manual shall be copied, reproduced, or transmitted in any way without the prior, written consent of **Automationdirect.com® Incorporated**. **AutomationDirect** retains the exclusive rights to all information included in this document.

ADVERTENCIA

Gracias por comprar equipo de automatización de **Automationdirect.com®**. Deseamos que su nuevo equipo de automatización opere de manera segura. Cualquier persona que instale o use este equipo debe leer esta publicación (y cualquier otra publicación pertinente) antes de instalar u operar el equipo.

Para reducir al mínimo el riesgo debido a problemas de seguridad, debe seguir todos los códigos de seguridad locales o nacionales aplicables que regulan la instalación y operación de su equipo. Estos códigos varian de área en área y usualmente cambian con el tiempo. Es su responsabilidad determinar cuales códigos deben ser seguidos y verificar que el equipo, instalación y operación estén en cumplimiento con la revisión mas reciente de estos códigos.

Como mínimo, debe seguir las secciones aplicables del Código Nacional de Incendio, Código Nacional Eléctrico, y los códigos de (NEMA) la Asociación Nacional de Fabricantes Eléctricos de USA. Puede haber oficinas de normas locales o del gobierno que pueden ayudar a determinar cuales códigos y normas son necesarios para una instalación y operación segura.

Si no se siguen todos los códigos y normas aplicables, puede resultar en daños al equipo o lesiones serias a personas. No garantizamos los productos descritos en esta publicación para ser adecuados para su aplicación en particular, ni asumimos ninguna responsabilidad por el diseño de su producto, la instalación u operación.

Nuestros productos no son tolerantes a fallas y no han sido diseñados, fabricados o intencionados para uso o reventa como equipo de control en línea en ambientes peligrosos que requieren una ejecución sin fallas, tales como operación en instalaciones nucleares, sistemas de navegación aérea, o de comunicación, control de tráfico aéreo, máquinas de soporte de vida o sistemas de armamentos en las cuales la falla del producto puede resultar directamente en muerte, heridas personales, o daños físicos o ambientales severos ("Actividades de Alto Riesgo"). **Automationdirect.com** específicamente rechaza cualquier garantía ya sea expresada o implicada para actividades de alto riesgo.
Para información adicional acerca de garantía e información de seguridad, vea la sección de Términos y Condiciones de nuestro catálogo. Si tiene alguna pregunta sobre instalación u operación de este equipo, o si necesita información adicional, por favor llámenos al número 770-844-4200 en Estados Unidos.
Esta publicación está basada en la información disponible al momento de impresión. En **Automationdirect.com** nos esforzamos constantemente para mejorar nuestros productos y servicios, así que nos reservamos el derecho de hacer cambios al producto y/o a las publicaciones en cualquier momento sin notificación y sin ninguna obligación. Esta publicación también puede discutir características que no estén disponibles en ciertas revisiones del producto.

Marcas Registradas

Esta publicación puede contener referencias a productos producidos y/u ofrecidos por otras compañías. Los nombres de las compañías y productos pueden tener marcas registradas y son propiedad única de sus respectivos dueños. Automationdirect.com, renuncia cualquier interés propietario en las marcas y nombres de otros.

PROPIEDAD LITERARIA 2005-2009, AUTOMATIONDIRECT.COM® INCORPORATED
Todos los derechos reservados

No se permite copiar, reproducir, o transmitir de ninguna forma ninguna parte de este manual sin previo consentimiento por escrito de **Automationdirect.com® Incorprated**. **Automationdirect.com** retiene los derechos exclusivos a toda la información incluida en este documento. Los usuarios de este equipo pueden copiar este documento solamente para instalar, configurar y mantener el equipo correspondiente. También las instituciones de enseñanza pueden usar este manual para propósitos educativos.

AVERTISSEMENT

Nous vous remercions d'avoir acheté l'équipement d'automatisation de **Automationdirect.com®**, en faisant des affaires comme, **AutomationDirect**. Nous tenons à ce que votre nouvel équipement d'automatisation fonctionne en toute sécurité. Toute personne qui installe ou utilise cet équipement doit lire la présente publication (et toutes les autres publications pertinentes) avant de l'installer ou de l'utiliser.

Afin de réduire au minimum le risque d'éventuels problèmes de sécurité, vous devez respecter tous les codes locaux et nationaux applicables régissant l'installation et le fonctionnement de votre équipement. Ces codes diffèrent d'une région à l'autre et, habituellement, évoluent au fil du temps. Il vous incombe de déterminer les codes à respecter et de vous assurer que l'équipement, l'installation et le fonctionnement sont conformes aux exigences de la version la plus récente de ces codes.

Vous devez, à tout le moins, respecter toutes les sections applicables du Code national de prévention des incendies, du Code national de l'électricité et des codes de la National Electrical Manufacturer's Association (NEMA). Des organismes de réglementation ou des services gouvernementaux locaux peuvent également vous aider à déterminer les codes ainsi que les normes à respecter pour assurer une installation et un fonctionnement sûrs.

L'omission de respecter la totalité des codes et des normes applicables peut entraîner des dommages à l'équipement ou causer de graves blessures au personnel. Nous ne garantissons pas que les produits décrits dans cette publication conviennent à votre application particulière et nous n'assumons aucune responsabilité à l'égard de la conception, de l'installation ou du fonctionnement de votre produit.

Nos produits ne sont pas insensibles aux défaillances et ne sont ni conçus ni fabriqués pour l'utilisation ou la revente en tant qu'équipement de commande en ligne dans des environnements dangereux nécessitant une sécurité absolue, par exemple, l'exploitation d'installations nucléaires, les systèmes de navigation aérienne ou de communication, le contrôle de la circulation aérienne, les équipements de survie ou les systèmes d'armes, pour lesquels la défaillance du produit peut provoquer la mort, des blessures corporelles ou de graves dommages matériels ou environnementaux («activités à risque élevé»). La société **AutomationDirect** nie toute garantie expresse ou implicite d'aptitude à l'emploi en ce qui a trait aux activités à risque élevé.

Pour des renseignements additionnels touchant la garantie et la sécurité, veuillez consulter la section Modalités et conditions de notre documentation. Si vous avez des questions au sujet de l'installation ou du fonctionnement de cet équipement, ou encore si vous avez besoin de renseignements supplémentaires, n'hésitez pas à nous téléphoner au 770-844-4200.

Cette publication s'appuie sur l'information qui était disponible au moment de l'impression. À la société **AutomationDirect**, nous nous efforçons constamment d'améliorer nos produits et services. C'est pourquoi nous nous réservons le droit d'apporter des modifications aux produits ou aux publications en tout temps, sans préavis ni quelque obligation que ce soit. La présente publication peut aussi porter sur des caractéristiques susceptibles de ne pas être offertes dans certaines versions révisées du produit.

Marques de commerce

La présente publication peut contenir des références à des produits fabriqués ou offerts par d'autres entreprises. Les désignations des produits et des entreprises peuvent être des marques de commerce et appartiennent exclusivement à leurs propriétaires respectifs. **AutomationDirect** nie tout intérêt dans les autres marques et désignations.

Copyright 2005-2009, Automationdirect.com® Incorporated
Tous droits réservés

Nulle partie de ce manuel ne doit être copiée, reproduite ou transmise de quelque façon que ce soit sans le consentement préalable écrit de la société **Automationdirect.com® Incorporated**. **AutomationDirect** conserve les droits exclusifs à l'égard de tous les renseignements contenus dans le présent document.

HARDWARE USER MANUAL

Please include the Manual Number and the Manual Issue, both shown below, when communicating with Technical Support regarding this publication.

Manual Number: EA-USER-M
Issue: 2nd Edition Rev. D
Issue Date: 10/09

Publication History		
Issue	**Date**	**Description of Changes**
First Edition	11/05	Original
Rev. A	01/06	Added chapters and content.
Rev. B	04/06	Added chapters 7-9 and appendix B.
Rev. C	08/07	Added AB EtherNet/IP, minor corrections, and content added.
Second Edition	02/08	Added Recipe backup/restore, Omron Ethernet & Siemens
Rev. A	07/08	Added Mitsubishi drivers, minor corrections.
Rev. B	10/08	Added CLICK and Siemens S7-200 Ethernet drivers.
Rev. C	04/09	Added tightening torque, battery note, enclosure and environment specs. Added Remote Access feature. Added EA-CF-CARD.
Rev. D	10/09	Added EA7-T6CL-R and EA7-T6CL

TABLE OF CONTENTS

Chapter 1: Getting Started 1–1

Introduction 1–2

Conventions Used 1–3

Mounting Clips – New Style 1–3

Product Overview 1–4

Part Number Key – Touch Panels 1–5

EZTouch Conversion and Mounting 1–6

EZTouch Touch Panel Cross Reference to C-more 1–7

Quick Start Steps 1–9

Step 1 – Unpack and Inspect 1–9
Step 2 – Assemble Temporary Support Stand 1–10
Step 3 – Install Optional Hardware Accessories 1–11
Step 4 – Become Familiar with Available Communication Ports 1–12
Step 5 – Install the Programming Software and Develop a Project 1–13
Step 6 – Connect Touch Panel to Computer 1–14
Step 7 – Provide Power to the Touch Panel 1–15
Step 8 – Access the Touch Panel Setup Screens 1–16
Step 9 – Choose Touch Panel to PLC Protocol & Cables 1–17
Step 10 – Connect Touch Panel to PLC 1–20

Chapter 2: Specifications 2–1

Available Models 2–2

Model Specifications 2–3

6″ Base Feature Models 2–4
6″ Full Feature Models 2–5
6″ Obsolete Models 2–6

8" and 10" Full Feature Models 2–8
12" and 15" Full Feature Models 2–9

EA7-S6M-R, S6C-R, T6CL-R, S6M, S6C, T6C, T6CL (Dimensions and Ports & Memory Exp.) 2–10

EA7-T8C (Dimensions and Ports & Memory Exp.) 2–12

EA7-T10C (Dimensions and Ports & Memory Exp.) 2–14

EA7-T12C (Dimensions and Ports & Memory Exp.) 2–16

EA7-T15C (Dimensions and Ports & Memory Exp.) 2–18

Mounting Clearances 2–20

Communications Ports 2–21

Audio WAV File Specifications 2–23

Memory Organization 2–24

Handling External Memory Devices 2–25

Power Loss Detection and Power Retention Period 2–26

Data Logging Function and Logging Media 2–26

Data Logging - Memory Device Full 2–26

Chemical Compatibility 2–27

Chapter 3: Accessories 3–1

Accessories 3–2

Accessories Overview 3–3

Accessories at a Glance 3–4

AC/DC Power Adapter – EA-AC 3–5

Expansion Assembly – EA-EXP-OPT 3–9

CF Card Interface Module – EA-CF-IF 3–12

CompactFlash Memory – EA-CF-CARD 3–14

6" Adapter Plate – EA-6-ADPTR 3–17

D-SUB 15-pin 90 degree Comm Port Adapter – EA-ADPTR-4 3–19

D-SUB 15-pin to Terminal Block Adapter – EA-COMCON-3 3–20
Non-glare Screen Covers – EA-xx-COV2, xx = 6, 8, 10, 12 or 15 3–22
USB Pen Drive – SDCZ4-2048-A10 3–24

Chapter 4: Installation and Wiring 4–1
Safety Guidelines 4–2
Introduction 4–3
EA7-S6M-R, S6C-R, T6CL-R, S6M, S6C, T6C, T6CL – Cutout Dimensions 4–4
EA7-T8C – Cutout Dimensions 4–5
EA7-T10C – Cutout Dimensions 4–6
EA7-T12C – Cutout Dimensions 4–7
EA7-T15C – Cutout Dimensions 4–8
6″ Adapter Plate – EA-6-ADPTR 4–9
Mounting Clearances 4–11
Wiring Guidelines 4–12
Agency Approvals 4–12
Marine Use 4–12
Providing Power to the Touch Panel 4–13
DC Wiring Diagram 4–13
AC Wiring Diagram (EA-AC) 4–14

Chapter 5: System Setup Screens 5–1
Introduction 5–2
Chapter Organization 5–3
Accessing the System Setup Screens (no project loaded) 5–4
Accessing the System Setup Screens (with project loaded) 5–5
System Setup Screens – Enable Password in Software 5–7
System Setup Screens Flowchart 5–13
Main Menu 5–14
Information Menu 5–15
Setting Menu 5–19

Test Menu 5–25

Memory Menu 5–35

Chapter 6: PLC Communications 6–1

Introduction 6–2

DirectLOGIC PLCs Password Protection 6–2

PLC Communication Cables & Wiring Diagrams 6–5

PLC Communication Cables & Wiring Diagrams 6–6

AutomationDirect PLCs RS-232C Serial: 6–7
Direct LOGIC PLCs RS-422A/RS-485A: 6–10
Direct LOGIC Universal Isolated Network Adapter, p/n FA-ISOCON: 6–14
Direct LOGIC Universal Converter, p/n F2-UNICON: 6–15
RS-422A/RS-485A Multi-Drop Wiring Diagram Examples 6–16
Allen-Bradley: 6–20
GE: 6–24
GE VersaMax Micro: 6–24
Mitsubishi: 6–24
Omron: 6–26
Modicon ModBus RS-232: 6–27
Modicon Micro Series: 6–27
Modicon ModBus with RJ45: 6–27
Siemens: 6–28

Chapter 7: Maintenance 7–1

Project Backup 7–2

Check Operating Environment 7–2

Check Operating Voltage 7–2

Check Status Indicators 7–2

Check Physical Conditions 7–3

Run Tests under System Setup Screens 7–3

Check Memory Usage via System Setup Screens 7–4

Check/Adjust Display Brightness or Contrast 7–4

Check Error Log via System Setup Screens 7–4
Adjust Touch Panel via System Setup Screens 7–4
Replace Battery Periodically 7–5
Cleaning the Display Screen 7–5
Check Project Functionality 7–6
Checks from *C-more* Programming Software 7–6

Chapter 8: Troubleshooting 8–1
Common Problems 8–2
Toubleshooting Flow Chart 8–3
Touch Panel does not Power up 8–4
Display is Blank 8–5
Display is Dim 8–6
No User Program 8–7
No Communications between Panel and PC (Personal Computer) 8–8
No Communications between Panel and PLC 8–13
IP Address in System Setup Screens displays 0.0.0.0 8–16
Difficulty Connecting to the Panel over the Internet (Web server and Remote Access features) 8–17
PLC Protocol Error Codes 8–18
Touch Panel Runtime Errors 8–19
Panel Constantly Displays “Initializing” when Powering up 8–20
Data not Logging Problems 8–20
Loss of Date/Time and Retentive Data 8–21
Electrical Noise Problems 8–21

Chapter 9: Replacement Parts 9–1
Replacement Parts Overview 9–2
Replacement Parts at a Glance 9–2
Battery Replacement & Installation Instructions 9–3

6″ Panel Mounting Clip Replacements & Installation 9–5
8-15″ Panel Mounting Clip Replacements & Installation 9–6
DC Panel Power Connector Replacement 9–7
AC Power Adapter Connector Replacement 9–7
8-15″ Panel Backlight Bulb Replacements & Installation 9–8
6-15″ Panel Gasket Replacement & Installation 9–11
8-15″ Panel Bezel Replacement & Installation 9–12
6″ Adapter Plate Gasket Replacement & Installation 9–14

Appendix A: PLC Protocol Error Codes A–1
Introduction A-2
C-more Touch Panel Error Code Table A-3
DirectLOGIC – Panel Error Code PLC-499 Explanation A-5
DirectLOGIC K-Sequence Protocol – PLC Error Code Table A-5
DirectLOGIC DirectNET Protocol – PLC Error Codes A-5
Modbus Protocols Error Code P499 Explanation A-6
AutomationDirect CLICK A-6
AutomationDirect DirectLOGIC - Modbus (Koyo) A-6
Modicon Modbus RTU A-6
Entivity Modbus RTU A-6
DirectLOGIC ECOM Protocol – PLC Error Codes A-6
Allen-Bradley – Panel Error Code PLC-499 Explanation A-7
Allen-Bradley DF1 & DH485 Protocols – PLC Error Code Tables A-8
Allen-Bradley EtherNet/IP Protocol –Panel Error Code PLC-496, 497 and 498 Explanation A-10
Allen-Bradley – EtherNet/IP Protocol – PLC Error Code TablesControlLogix, CompactLogix, & FlexLogix A-11
Allen-Bradley – EtherNet/IP Protocol – PLC Error Code TablesMicroLogix 1100, 1400 & SLC 5/05, both via native Etherne-9t port;MicroLogix 1000, 1100, 1200, 1400, 1500, SLC 5/03/04/05, all via ENI Adapter A-15
Generic EtherNet IP Protocol – PLC Error Codes A-20

GE 90-30 – Panel Error Code PLC-499 Explanation A-21
GE 90-30 SNPX Protocol – PLC Error Code Tables A-22
Mitsubishi FX Protocol – PLC Error Codes A-31
Omron – Panel Error Code PLC-499 Explanation A-31
Omron Host Link Protocol – PLC Error Code Table A-32
Omron FINS Protocol – PLC Error Code Table A-33
Omron – Panel Error Code P495 Explanation A-36
Omron CS/CJ FINS Ethernet Protocol – PLC Error Code Table A-37
Siemens – Panel Error Code P499 Explanation A-38
Siemens PPI Protocol – PLC Error Code Table A-39
Siemens ISO over TCP Protocol – PLC Error Code Table A-40

Appendix B: Touch Panel Runtime Errors B–1
Introduction B–2
Runtime Errors B–3

Appendix C: Mounting Clips Prior April 2006 . . . . . .C–1
Introduction C–2
EA7-S6M-R, S6C-R, S6M, S6C & T6C C–3
EA7-T8C C–5
EA7-T10C C–7
EA7-T12C C–9
EA7-T15C C–11

Index

GETTING STARTED

CHAPTER 1

In This Chapter...

Introduction 1–2

Conventions Used 1–3

Mounting Clips – New Style 1–3

Product Overview 1–4

Part Number Key – Touch Panels 1–5

EZTouch Conversion and Mounting 1–6

EZTouch Touch Panel Cross Reference to C-more 1–7

Quick Start Steps 1–9

Step 1 – Unpack and Inspect 1–9

Step 2 – Assemble Temporary Support Stand 1–10

Step 3 – Install Optional Hardware Accessories 1–11

Step 4 – Become Familiar with Available Communication Ports 1–12

Step 5 – Install the Programming Software and Develop a Project 1–13

Step 6 – Connect Touch Panel to Computer 1–14

Step 7 – Provide Power to the Touch Panel 1–15

Step 8 – Access the Touch Panel Setup Screens 1–16

Step 9 – Choose Touch Panel to PLC Protocol & Cables 1–17

Step 10 – Connect Touch Panel to PLC 1–20

1

Introduction

The Purpose of this Manual

Thank you for purchasing our *C-more*® Touch Panel family of products. This manual describes AutomationDirect.com's *C-more* Touch Panels, their specifications, included components, available accessories and provides you with important information for installation, connectivity and setup. The manual shows you how install, wire and use the products. It also helps you understand how to interface the panels to other devices in a control system.

This user manual contains important information for personnel who will install the touch panels and accessories, and for the personnel who will be programming the panel. If you understand control systems that make use of operating interfaces such as the *C-more* touch panels, our user manuals will provide all the information you need to get, and keep your system up and running.

Supplemental Manuals

If you are familiar with industrial control type devices, you may be able to get up and running with just the aide of the Quick Start Guide that is included with each touch panel. You can also refer to the On-line help that is available in the *C-more* programming software for more information about programming the panel. The accessories include data sheets that will help with installing the accessories.

Technical Support

We strive to make our manuals the best in the industry. We rely on your feedback to let us know if we are reaching our goal. If you cannot find the solution to your particular application, or, if for any reason you need technical assistance, please call us at:

770–844–4200

Our technical support group will work with you to answer your questions. They are available Monday through Friday from 9:00 A.M. to 6:00 P.M. Eastern Time. We also encourage you to visit our web site where you can find technical and non-technical information about our products and our company.

http://cmore.automationdirect.com

If you have a comment, question or suggestion about any of our products, services, or manuals, please fill out and return the 'Suggestions' card that was included with this manual.

Conventions Used

*When you see the "notepad" icon in the left-hand margin, the paragraph to its immediate right will be a special note. The word **NOTE:** in boldface will mark the beginning of the text.*

When you see the "exclamation mark" icon in the left-hand margin, the paragraph to its immediate right will be a warning. This information could prevent injury, loss of property, or even death (in extreme cases). The word WARNING: in boldface will mark the beginning of the text.

Key Topics for Each Chapter

The beginning of each chapter will list the key topics that can be found in that chapter.

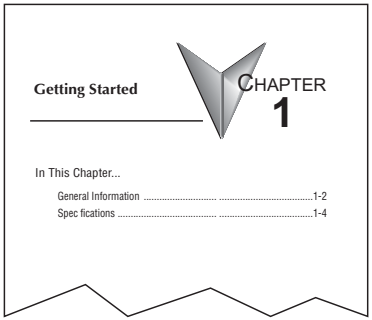

Mounting Clips – New Style

***NOTE: C-more** touch panels shipped prior to approximately **April 2006** had a slightly different mounting clip design. All of the drawings and illustrations in this issue of the Hardware User Manual are shown with the newer design. **Appendix C: Mounting Clips Prior April 2006** contains drawings and illustrations of the original designed mounting clips for your reference.*

Product Overview

Some of the features designed into the product to provide excellent hardware and software are listed below.

- Analog touch screen (no touch cell boundaries)
- Plenty of memory and methods to get data in/out of the panel
- Overlapping active devices on the touch screen
- 65,536 colors for enhanced graphics
- Screen resolutions up to 1024 X 768 pixels
- Built-in project simulation; test on PC while developing
- Serial RS232, RS422/485 and Ethernet 10/100Base-T communications (Ethernet available on full feature units only.)
- Programming via USB or Ethernet (Ethernet available on full feature units only.)
- Optional AC/DC power adapter (EA-AC)
- User replaceable bulbs and bezels on 8”, 10”, 12” and 15” panels
- Animation of bitmaps and objects
- 4,000 built-in symbols, classic fonts: 6x8, 8x16, 8x32, 8x64, 16x16, 16x32, 16x64, 32x16, 32x32, 32x64, and Windows fonts
- PID face plate, trending, alarming and a recipe database
- Event Manager to trigger actions based on assigned state changes, schedules, PLC tag names, etc. setup in a database environment. The event can also trigger a sound byte, initiate a screen capture, send a data file (FTP), send an E-mail, etc.
- Select unique background screens for each created screen
- Trend Data logging
- Internet Remote Access
- Built-in FTP client/server, E-mail client, and Web server
- Audio output port - stereo, requires amplifier and speaker(s)

Part Number Key – Touch Panels

The *C-more* touch panel part numbers consist of the following key:

Screen Size:
- 6: 5.7”
- 8: 8.4”
- 10: 10.4”
- 12: 12.1”
- 15: 15.0”

Features:
- L: LED

Features:
- blank: Full
- R: Base

EA7-xxxx-x

LCD Type:
- S: STN
- T: TFT

Color:
- C: Color
- M: Grayscale

Product label examples:

EA7-T6CL-R

EA7-T15C

Serial Number and Date Code formats:

Serial Number = [Part Number]+[**YYMDDFNNN**]

Date Code = **YYMF**

- **YY:** Year (05–99 --- e.g. 05 = 2005)
- **M:** Month (1–9, X, Y, Z --- e.g. X = Oct.)
- **DD:** Day (1–31)
- **F:** Manufacturing Site (0–9, A–Z)
- **NNN:** Sequence number for the date listed (000–999)

EZTouch Conversion and Mounting

C-more panels are a drop-in replacement for **EZTouch** panels from ***AutomationDirect***. They fit the same panel cutout*. The ***C-more*** software will convert your legacy **EZTouch** project (created with EZTouch Edit ver. 3.1a) automatically with no changes to the project required.** Just open your old **EZTouch** project in the new ***C-more*** Programming Software, connect the USB cable, and click "Send to Panel". The conversion is automatic and you will benefit immediately from:

- A better looking display
- A brighter screen
- Longer backlight bulb life
- Wider temperature tolerance
- A two year warranty

Note: *EZTouch projects most have been created with EZTouch Edit software version 3.1a to assure proper project conversion.*

Now, there are hundreds of new features you may want to take advantage of, but it's nice to know that you can be up and running your existing **EZTouch** project in just a few minutes.

C-more accepts the same PLC communications and networking cables that you are using with **EZTouch**. The 24 VDC power connections accept the same DC wiring that you used for **EZTouch**, and now there is a removable terminal block connector. Only the programming cable is different - you no longer have to buy a proprietary serial cable to program your touch panel. *C-more* uses a standard USB cable or an Ethernet (CAT5) connection for programming.

* If you have an old 6" non-slim bezel **EZTouch** panel you will need our 6" Adapter Plate, part number EA-6-ADPTR, see the chapter on accessories.

** The project conversion utility is a great feature. However the user must take full responsibility in ensuring the conversion works to their satisfaction.

Example of a C-more 6" touch panel mounted into an existing EZTouch non-slim bezel cutout using the C-more 6" adapter plate.

EZTouch Touch Panel Cross Reference to *C-more*

EZTouch			*C-more**
EZTouch 6”, grayscale STN (0–45 °C)		*C-more* 6” Adapter	*C-more* 6”, grayscale STN (0–50 °C)
EZ-S6M-R	Requires:	EA-6-ADPTR	EA7-S6M-R
EZ-S6M-RS			
EZ-S6M-F	Requires:	EA-6-ADPTR	EA7-S6M (includes Ethernet)
EZ-S6M-FS			

EZTouch			*C-more**
EZTouch 6”, 128 Color STN (0–45 °C)		*C-more* 6” Adapter	*C-more* 6”, 65,536 Color TFT (0–50 °C)
EZ-S6C-K	Requires:	EA-6-ADPTR	EA7-T6CL-R
EZ-S6C-KS			
EZ-S6C-F	Requires:	EA-6-ADPTR	EA7-T6CL (includes Ethernet)
EZ-S6C-FS			
EZ-S6C-FST			

EZTouch	*C-more**
EZTouch 8”, 128 Color STN (0–40 °C)	*C-more* 8”, 65,536 Color TFT (0–50 °C)
EZ-S8C-F	EA7-T8C (includes Ethernet)
EZ-S8C-FS	
EZ-S8C-FST	

***Note**: All **C-more** touch panels meet UL type 4X when mounted on a flat surface of a type 4X indoor use only enclosure. Non-FDA*

EZTouch Touch Panel Cross Reference to *C-more* (cont'd)

EZTouch	*C-more**
EZTouch 10", 128 Color TFT (0–50 °C)	*C-more* 10", 65,536 Color TFT (0–50 °C)
EZ-S10C-F	EA7-T10C (includes Ethernet)
EZ-T10C-FS	
EZ-T10C-FST	
EZ-T10C-FSE	

EZTouch	*C-more**
No 12" EZTouch available	*C-more* 12", 65,536 Color TFT (0–50 °C)
	EA7-T12C (includes Ethernet)

EZTouch	*C-more**
EZTouch 15", 128 Color TFT (0–45 °C)	*C-more* 15", 65,536 Color TFT (0–50 °C)
EZ-T15C-FS	EA7-T15C (includes Ethernet)
EZ-T15C-FST	
EZ-T15C-FSE	

***Note**: All **C-more** touch panels meet UL type 4X when mounted on a flat surface of a type 4X indoor use only enclosure. Non-FDA*

Quick Start Steps

Step 1 – Unpack and Inspect

a.) Unpack the *C-more* Touch Panel from its shipping carton. Included in the carton are the following:

- *C-more* Touch Panel
- cutout template
- mounting clips
- temporary support stand
- DC power connector
- gasket
- Quick Start Guide, p/n EA-QSG

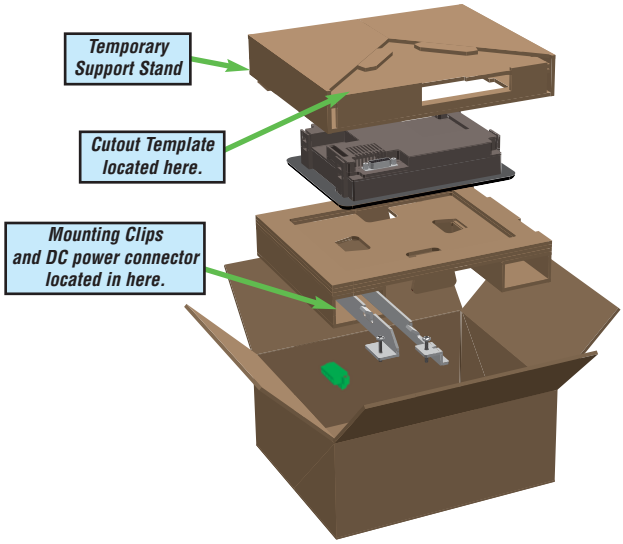

b.) Unpack any accessories that have been ordered, such as: AC/DC Power Adapter, Expansion Assembly, CompactFlash memory, programming cable, communications cable, etc.

c.) Inspect all equipment for completeness. If anything is missing or damaged, immediately call the *AutomationDirect*® returns department @ 1-800-633-0405.

Shipping Carton Contents

Optional Accessories

AC Power Adapter
EA-AC

Expansion Assembly
EA-EXP-OPT

Compact Flash Card
EA-CF-CARD

2gb USB Pen Drive
SDCZ4-2048-A10

Step 2 – Assemble Temporary Support Stand

6“ & 8” Touch Panel – Temporary Stand

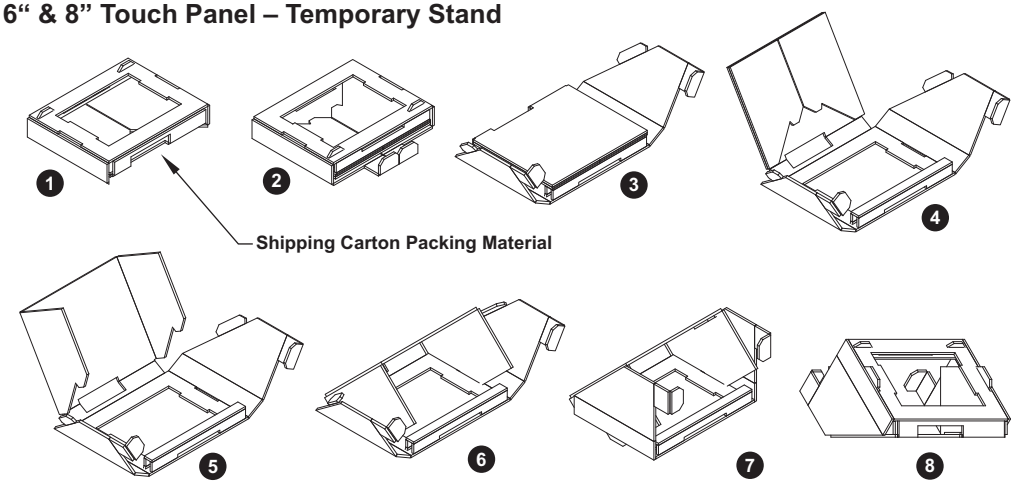

10”, 12“ & 15” Touch Panel – Temporary Stand

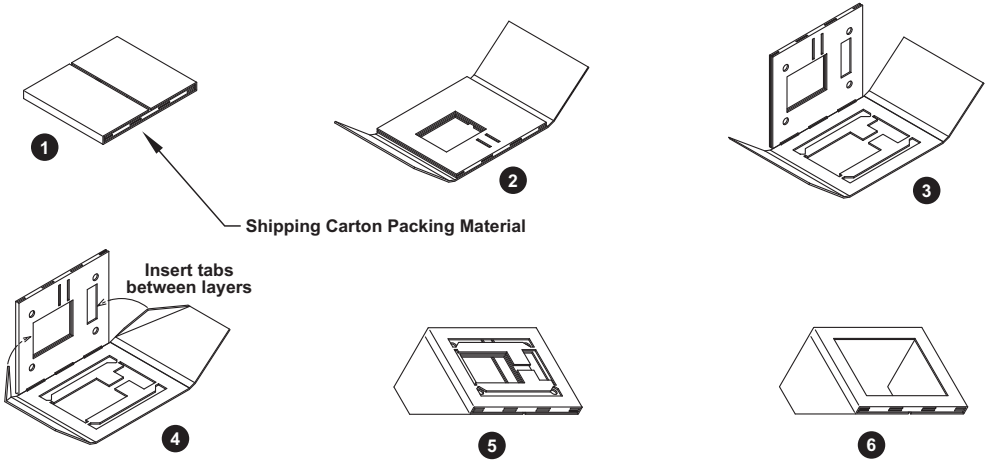

***NOTE**: See **Chapter 4: Installation and Wiring** for **C-more** touch panel installtion information including cutout dimensions and mounting clearances.*

Step 3 – Install Optional Hardware Accessories

***NOTE**: CompactFlash memory card designations – **CF Slot #1** is at the top of the panel and **CF Slot #2** is the CF Card Interface Module, p/n EA-CF-IF.*

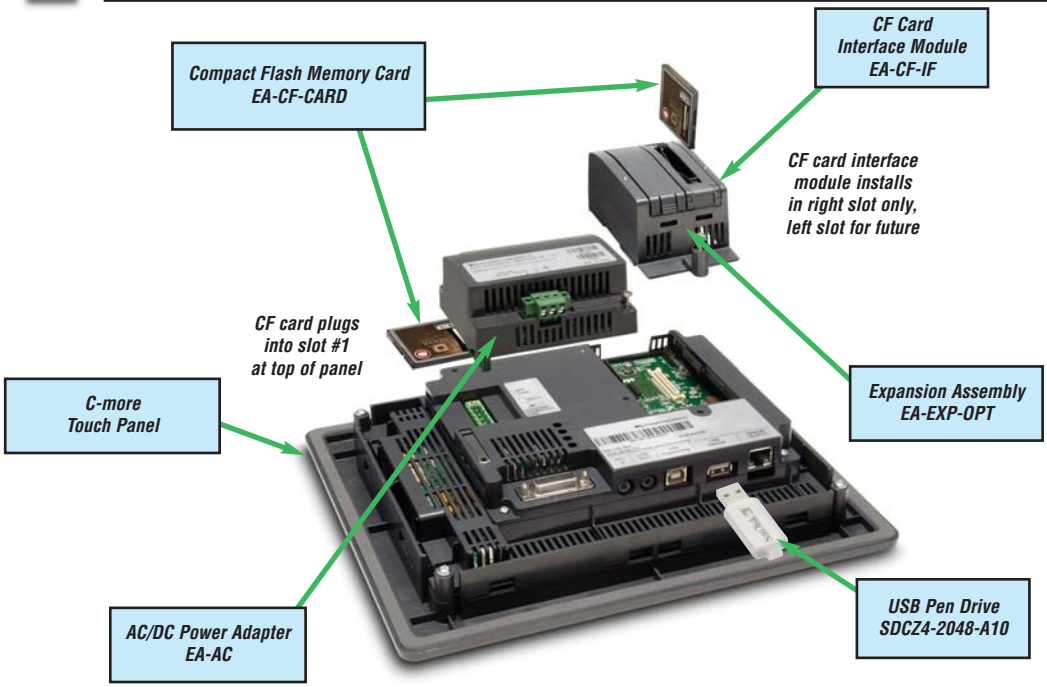

***NOTE**: The **C-more** 6" touch panels will fit into the existing cutout of any **EZTouch** 6" slim bezel panel. Use the **C-more** 6" Adapter Plate, p/n EA-6-ADPTR, to install **C-more** 6" panels into existing cutouts of **EZTouch** 6" non-slim (rounded bezel) panels.*

Optional Accessories

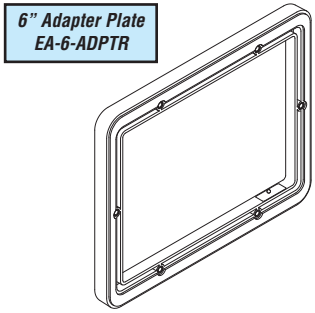

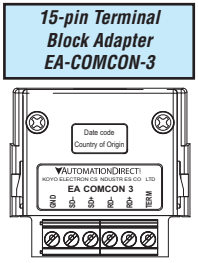

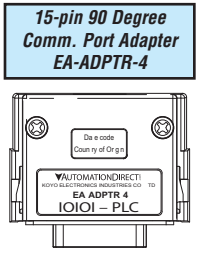

Step 4 – Become Familiar with Available Communication Ports

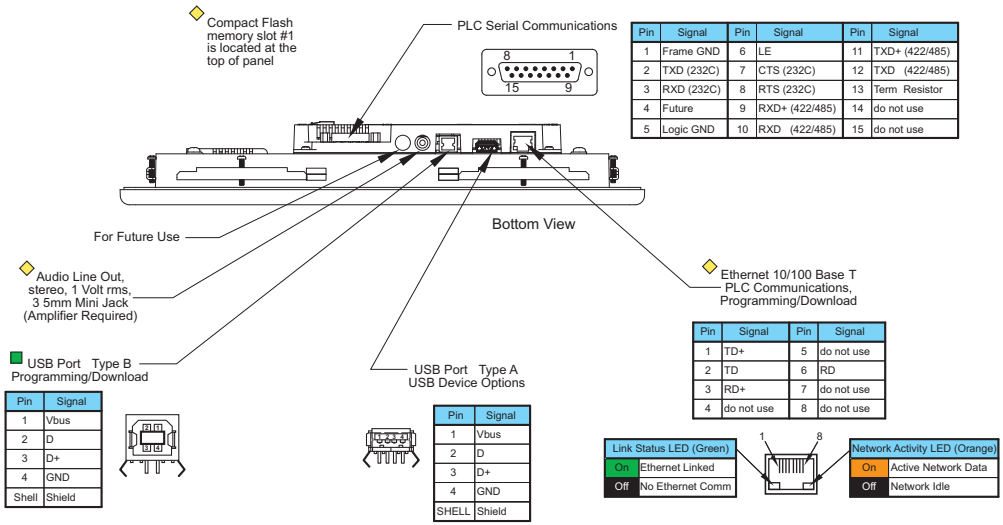

Pin	Signal	Pin	Signal	Pin	Signal
1	Frame GND	6	LE	11	TXD+ (422/485)
2	TXD (232C)	7	CTS (232C)	12	TXD (422/485)
3	RXD (232C)	8	RTS (232C)	13	Term Resistor
4	Future	9	RXD+ (422/485)	14	do not use
5	Logic GND	10	RXD (422/485)	15	do not use

Pin	Signal
1	Vbus
2	D
3	D+
4	GND
Shell	Shield

Pin	Signal
1	Vbus
2	D
3	D+
4	GND
SHELL	Shield

Pin	Signal	Pin	Signal
1	TD+	5	do not use
2	TD	6	RD
3	RD+	7	do not use
4	do not use	8	do not use

Link Status LED (Green)	
On	Ethernet Linked
Off	No Ethernet Comm

Network Activity LED (Orange)	
On	Active Network Data
Off	Network Idle

Note Device is not available on Base Feature touch panels, part numbers EA7 S6M R and EA7 T6CL R

Note Use USB Programming Cable, for example p/n USB CBL AB15

***Note**: See **Chapter 2: Specifications** and **Chapter 6: PLC Communications** for additional details on the available communication ports, protocols and cables.*

Step 5 – Install the Programming Software and Develop a Project

Following are the minimum system requirements for running *C-more* Programming Software, p/n EA-PGMSW, on a PC:

- Personal Computer with a 333 MHz or higher processor (CPU) clock speed recommended; Intel® Pentium/Celeron family, or AMD® K6/Athlon/Duron family, or compatible processor recommended
- Keyboard and Mouse or compatible pointing device
- Super VGA color video adapter and monitor with at least 800 x 600 pixels resolution (1024 x 768 pixels recommended)
  64K color minimum
- 300 MB free hard-disk space
- 128 MB free RAM (512 MB recommended); 512 MB free RAM (1 GB recommended) for Vista
- CD-ROM or DVD drive for installing software from the CD
- USB port or Ethernet 10/100 Mbps port for project transfer from software to touch panel (Ethernet port not available on -R models)
- Operating System - Windows® XP Home / Professional Edition Service Pack 2 , Windows® 2000 with Service Pack 4 or Vista® (32 bit)

Insert the supplied CD-ROM into the PC's CD-ROM drive and follow the instructions. If you need assistance during the software installation, please refer to the supplied Software Installation Guide or call the AutomationDirect Technical Support team @ 770-844-4200.

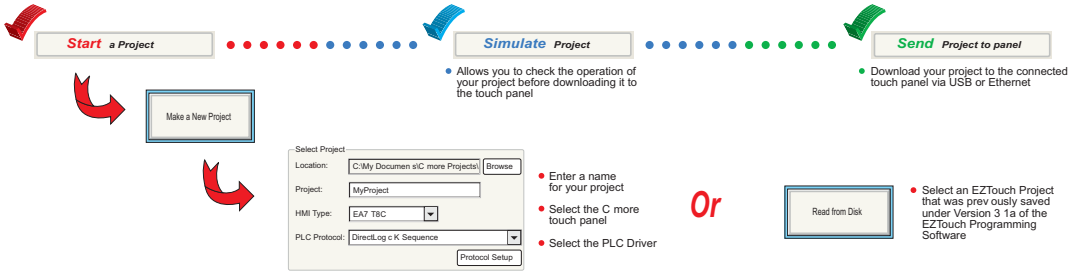

Step 6 – Connect Touch Panel to Computer

- **Connect** a USB Programming Cable, such as p/n USB-CBL-AB15, from an USB type A port on the PC to the USB type B programming port on the *C-more* touch panel
- **or** connect the *C-more* touch panel and PC together via an Ethernet hub or switch, and CAT5 Ethernet cables (full feature panels only)
- **or** use an Ethernet crossover cable directly between the *C-more* touch panel Ethernet port and the PC Ethernet port (full feature panels only)

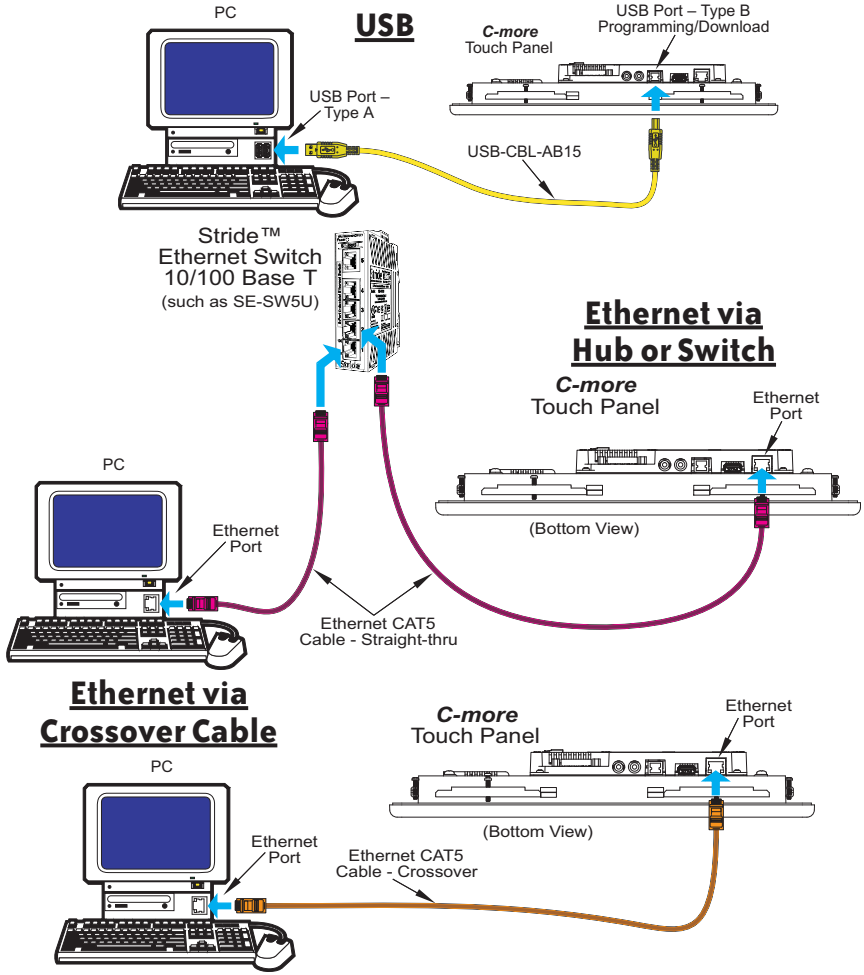

NOTE: On power up, the touch panel will either copy the project from its internal Flash memory to its internal SDRAM memory and run the project, or if a CompactFlash memory card is plugged into the CF1 slot, then any project contained on the CF memory card will be copied to the panel's internal SDRAM memory and be run. The memory of a CompactFlash card on CF1 will override the panel's internal Flash memory on power up or reboot, even if the CompactFlash memory card does not contain a project.

Step 7 – Provide Power to the Touch Panel

- **Connect** a **dedicated** 24 VDC (20.4 - 28.8 VDC) switching power supply rated at a minimum of 1.5 A to the DC connector on the rear of the *C-more* touch panel, include wiring the ground terminal to a proper equipment ground
- **or** install a *C-more* AC/DC Power Adapter, EA-AC, to the rear of the touch panel and connect an AC voltage source of 100-240 VAC, 50/60Hertz, to its AC connector (see note below)
- **then** turn on the power source and check the LED status indicators on the rear of the *C-more* touch panel for proper indication

NOTE: The AC/DC Power Adapter, EA-AC, is for *C-more* touch panels only. The adapter is powered from a 100-240 VAC, 50/60 Hertz power source. The adapter provides 24 VDC @ 1.5 A. Power Fault features help protect data being logged to CompactFlash during power failures. The *C-more* panel must have firmware version 1.21 Build 6.18E or higher for proper operation.

DC Wiring

Recommended DC Supply Fuse		
Panel Size	Rating	ADC p/n
6" – 10"	2.5 A	MDL2-5
12" & 15"	4.0 A	MDL4

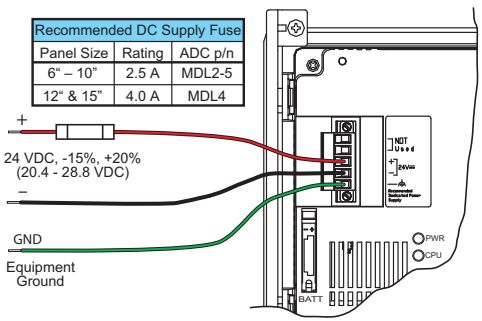

WARNING: The AC/DC Power Adapter is not recommended for use with the EA7-T15C touch panel when operating temperatures are expected to exceed 40 °C [104 °F].

AC Wiring

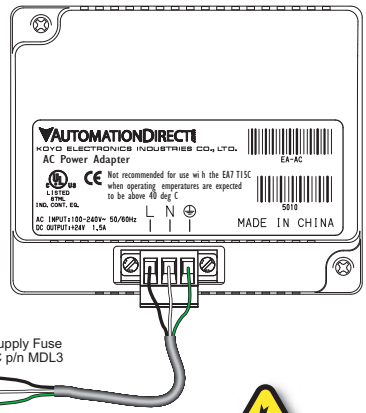

Tightening Torque	
Power supply cable torque	71 - 85 oz-in (0.5 - 0.6 Nm)
Power connector mounting torque	71 - 85 oz-in (0.5 - 0.6 Nm)
Mounting flange screw torque	57 - 71 oz-in (0.4 - 0.5 Nm)

NOTE: Use 60 / 75 °C copper conductors only.

C-more LED Status Indicators

CPU Status LED (Green, Orange & Red)	
Off	Power Off
Green	Normal – CPU Run State
Red	Memory Error
Blinking Red	Operating System not found
Blinking Orange	LCD Backlight Failure
Blinking Green	Power Loss Detection

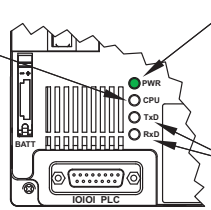

Rear View

Power LED (Green)	
On	Power On
Off	Power Off

Serial TxD/RxD LED (Green)	
On	Comm. is active
Off	No communication

Step 8 – Access the Touch Panel Setup Screens

- Access the Main Menu of the touch panel System Setup Screens by pressing the extreme upper left corner of the panel display area for three (3) seconds as shown below.
- Adjust the time and date for the panel by pressing the Setting button on the Main Menu, then press the Adjust Clock button on the Setting screen.
- Use the right pointing arrows for the time or date display to select the unit to change. Use the up and down arrows to increment or decrement the value for the selected unit.
- Press OK when done to accept the changes to the time and date that is retained in the touch panel's battery backed memory, or press Cancel to exit the Adjust Clock setup screen without making any changes.
- Press the Main Menu button on the Setting screen and then the Exit button on the Main Menu screen to return to the application screen.

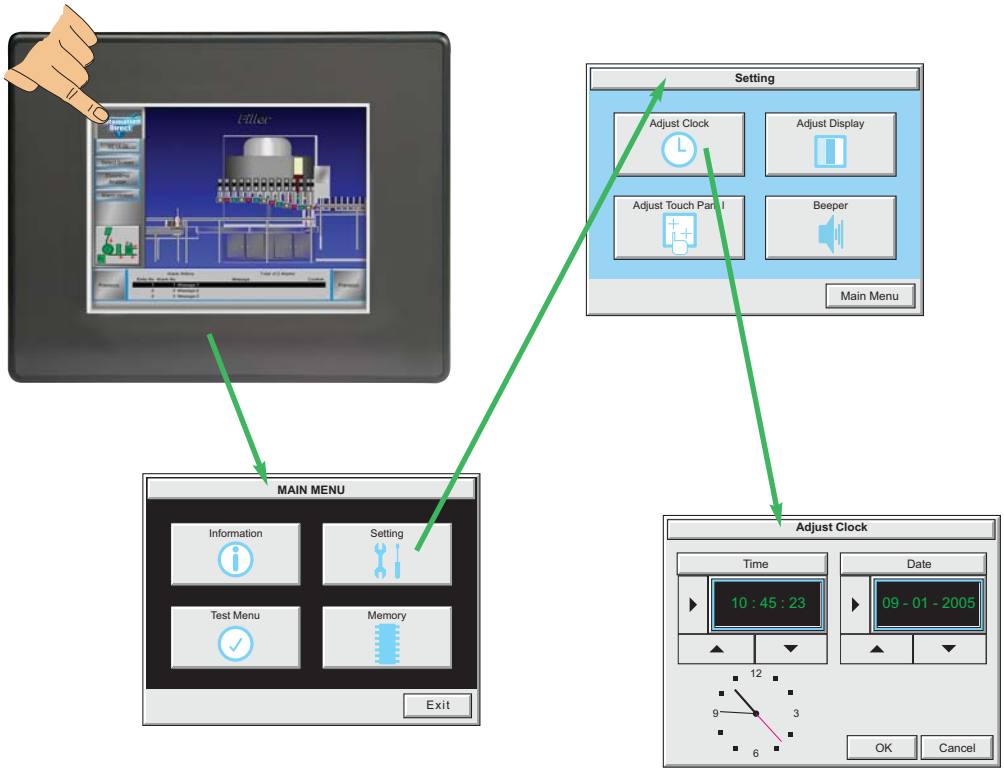

***Note**: When using an Ethernet connection, by default the panel is set for DHCP IP addressing. If it can not find a DHCP server, the panel will automatically assign an IP address. The IP address can be changed by the user from the programming software or by accessing the IP address setting screen as shown on page 5-19 and detailed on page 5-24. See **Chapter 5 - System Setup Screens** for details on other setup screen settings and functions.*

Step 9 – Choose Touch Panel to PLC Protocol & Cables

PLC Compatibility Table			
PLC Family	**Model**		**Protocols**
CLICK	all		AutomationDirect Modbus (CLICK)
AutomationDirect *Direct*LOGIC	DL05/DL06	all	K-Sequence
			*Direct*NET
			Modbus (Koyo addressing)
		H0-ECOM/H0-ECOM100	*Direct*LOGIC Ethernet
	DL105	all	K-Sequence
	DL205	D2-230	K-Sequence
		D2-240	K-Sequence
			*Direct*NET
		D2-250/D2-250-1/D2-260	K-Sequence
			*Direct*NET
			Modbus (Koyo addressing)
		D2-240/D2-250-1/D2-260 Using DCM	*Direct*NET
			Modbus (Koyo addressing)
		H2-ECOM/H2-ECOM100	*Direct*LOGIC Ethernet
	DL305	D3-330/330P (Requires the use of a Data Communications Unit)	*Direct*NET
		D3-340	*Direct*NET
		D3-350	K-Sequence
			*Direct*NET
			Modbus (Koyo addressing)
		D3-350 DCM	*Direct*NET
			Modbus (Koyo addressing)
	DL405	D4-430	K-Sequence
			*Direct*NET
		D4-440	K-Sequence
			*Direct*NET
		D4-450	K-Sequence
			*Direct*NET
			Modbus (Koyo addressing)
		All with DCM	*Direct*NET
			Modbus (Koyo addressing)
		H4-ECOM/H4-ECOM100	*Direct*LOGIC Ethernet
	H2-WinPLC (Think & Do) Live V5.2 or later and Studio any version		Think & Do Modbus RTU (serial port)
	H2-WinPLC (Think & Do) Live V5.5.1 or later and Studio V7.2.1 or later		Think & Do Modbus TCP/IP (Ethernet port)

PLC Compatibility Table continued on the next page.

Step 9 – Choose Touch Panel to PLC Protocol & Cables (cont'd)

PLC Compatibility Table (cont'd)		
PLC Family	**Model**	**Protocols**
Allen-Bradley	MicroLogix 1000, 1100, 1200, 1400, 1500, SLC 5-01/02/03, PLC5	DH485/AIC/AIC+
	MicroLogix 1000, 1100, 1200, 1400, 1500	DF1 Half Duplex; DF1 Full Duplex
	SLC 5-03/04/05	
	ControlLogix™, CompactLogix™, FlexLogix™	
	PLC-5	DF1 Full Duplex
	ControlLogix, CompactLogix, FlexLogix - Tag Based	DF1 Half Duplex; DF1 Full Duplex
	ControlLogix, CompactLogix, FlexLogix - Generic I/O Messaging	EtherNet/IP Server
	ControlLogix, CompactLogix, FlexLogix - Tag Based	EtherNet/IP Client
	MicroLogix 1100, 1400, SLC 5/05, both via native Ethernet port	
	MicroLogix 1000, 1100, 1200, 1400, 1500, SLC 5-03/04/05, all via ENI adapter	
Modbus TCP/IP	Modbus TCP/IP devices	Modbus TCP/IP
GE	90/30, 90/70. Micro 90, VersaMax Micro	SNPX
Mitsubishi	FX Series	FX Direct
	Q02, Q02H, Q06H, Q12H, Q25H	Q CPU
	Q, QnA Serial	QnA Serial
	Q, Qna Ethernet	QnA Ethernet
Omron	C200 Adapter, C500	Host Link
	CJ1/CS1 Serial	FINS
	CJ1/CS1 Ethernet	
Modicon	984 CPU, Quantum 113 CPU, AEG Modicon Micro Series 110 CPU: 311-xx, 411-xx, 512-xx, 612-xx	Modbus RTU
Siemens	S7-200 CPU, RS-485 Serial	PPI
	S7-200 CPU, S7-300 CPU; Ethernet	Ethernet ISO over TCP

Step 9 – Choose Cables continued on next page.

Step 9 – Choose Touch Panel to PLC Protocol & Cables (cont'd)

Purchased Cable Description	Cable Part Number
AutomationDirect CLICK, *Direct*LOGIC PLC RJ-12 port, DL05, DL06, DL105, DL205, D3-350, D4-450 & H2-WINPLC (RS-232C)	**EA-2CBL**
*Direct*LOGIC (VGA Style) 15-pin port DL06, D2-250 (250-1), D2-260 (RS-232C)	**EA-2CBL-1**
*Direct*LOGIC PLC RJ-11 port, D3-340 (RS-232C)	**EA-3CBL**
*Direct*LOGIC DL405 PLC 15-pin D-sub port, DL405 (RS-232C)	**EA-4CBL-1**
*Direct*LOGIC PLC 25-pin D-sub port, DL405, D3-350, DL305 DCU and all DCM's (RS-232C)	**EA-4CBL-2**
Allen-Bradley MicroLogix 1000, 1100, 1200, 1400, 1500 (RS-232C)	**EA-MLOGIX-CBL**
Allen-Bradley SLC 5-03/04/05, ControlLogix, CompactLogix, FlexLogix DF1 port (RS-232C)	**EA-SLC-232-CBL**
Allen-Bradley PLC-5 DF1 port (RS-232C)	**EA-PLC5-232-CBL**
Allen-Bradley MicroLogix, SLC 5-01/02/03, PLC5 DH485 port (RS-232C)	**EA-DH485-CBL**
GE 90/30, 90/70, Micro 90, VersaMax Micro 15-pin D-sub port (RS-422A)	**EA-90-30-CBL**
MITSUBISHI FX Series 25-pin port (RS-422A)	**EA-MITSU-CBL**
MITSUBISHI FX Series 8-pin mini-DIN (RS-422A)	**EA-MITSU-CBL-1**
OMRON Host Link (C200 Adapter, C500) (RS-232C)	**EA-OMRON-CBL**

NOTE 1: *The above list of pre-made communications cables may be purchased. See* ***Chapter 6: PLC Communications*** *for wiring diagrams of additonal* ***user constructed cables****. Chapter 6 also includes wiring diagrams for the pre-made cables.*

NOTE 2: *EZTouch serial PLC communication cables are compatible with* ***C-more*** *touch panels.*

Pre-made cable examples

EA-2CBL

EA-2CBL-1

Step 10 – Connect Touch Panel to PLC

- Connect the serial communications cable between the *C-more* touch panel and the PLC
- or connect the *C-more* touch panel and PLC together via an Ethernet hub or switch, and CAT5 Ethernet cables (full feature panels only)
- or use an Ethernet crossover cable directly between the *C-more* Ethernet port and the PLC Ethernet port (full feature panels only)

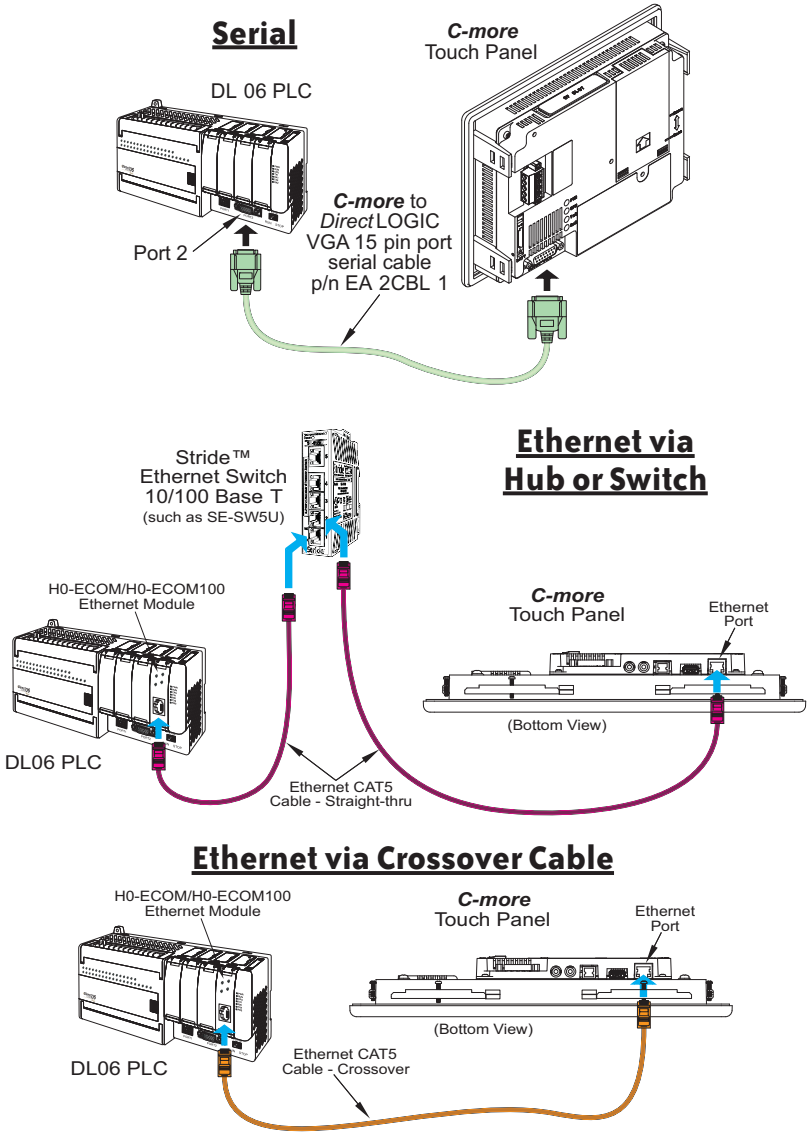

SPECIFICATIONS

CHAPTER 2

In This Chapter...

Available Models 2–2

Model Specifications 2–3

6″ Base Feature Models 2–4

6″ Full Feature Models 2–5

6″ Obsolete Models 2–6

8″ and 10″ Full Feature Models 2–8

12″ and 15″ Full Feature Models 2–9

EA7-S6M-R, S6C-R, T6CL-R, S6M, S6C, T6C, T6CL (Dimensions and Ports & Memory Exp.) 2–10

EA7-T8C (Dimensions and Ports & Memory Exp.) 2–12

EA7-T10C (Dimensions and Ports & Memory Exp.) 2–14

EA7-T12C (Dimensions and Ports & Memory Exp.) 2–16

EA7-T15C (Dimensions and Ports & Memory Exp.) 2–18

Mounting Clearances 2–20

Communications Ports 2–21

Audio WAV File Specifications 2–23

Memory Organization 2–24

Handling External Memory Devices 2–25

Power Loss Detection and Power Retention Period 2–26

Data Logging Function and Logging Media 2–26

Data Logging - Memory Device Full 2–26

Chemical Compatibility 2–27

Available Models

The *C-more*® Operator Interface is the next generation of touch panel brought to you by *AutomationDirect*. It has been designed to display and interchange graphical data from a PLC by merely viewing or touching the screen.

The *C-more* Touch Panel is available in a variety of models to suit your application. Refer to the following tables for a list of part numbers, descriptions and options available.

Part Number	Description	User Memory	CF Card Option	USB Device	Ethernet
EA7-S6M-R	6-inch ***C-more*** grayscale STN touch panel (5.7 inch viewable screen), 15 shades of gray, 320 x 240 pixel QVGA screen resolution, 333 MHz CPU, 24 VDC (20.4-28.8 VDC operating range), NEMA 4/4X, IP65 (when mounted correctly; for indoor use only), non-replaceable backlight, 50,000 hour half-life. *Base Model: Built-in USB only, no Ethernet or CompactFlash support.	10 MB	No	Yes	No
EA7-T6CL-R	6-inch ***C-more*** color TFT touch panel (5.7 inch viewable screen), 64K colors, 320 x 240 pixel QVGA screen resolution, 333 MHz CPU, 24 VDC (20.4-28.8 VDC operating range), NEMA 4/4X, IP65 (when mounted correctly; for indoor use only), non-replaceable LED backlight, 50,000 hour half-life. *Base Model: Built-in USB only, no Ethernet or CompactFlash support.	10 MB	No	Yes	No
EA7-S6M	6-inch ***C-more*** grayscale STN touch panel (5.7 inch viewable screen), 15 shades of gray, 320 x 240 pixel QVGA screen resolution, 333 MHz CPU, 24 VDC (20.4-28.8 VDC operating range), NEMA 4/4X, IP65 (when mounted correctly; for indoor use only), non-replaceable backlight, 50,000 hour half-life. Built-in Ethernet and USB; supports CompactFlash.	10MB	Yes	Yes	Yes
EA7-T6CL	6-inch ***C-more*** color TFT touch panel (5.7 inch viewable screen), 64K colors, 320 x 240 pixel QVGA screen resolution, 333 MHz CPU, 24 VDC (20.4-28.8 VDC operating range), NEMA 4/4X, IP65 (when mounted correctly; for indoor use only), non-replaceable LED backlight, 50,000 hour half-life. Built-in Ethernet and USB; supports Compact Flash.	10 MB	Yes	Yes	Yes

Table continued on the next page.

Available Models (cont'd)

Part Number	Description	User Memory	CF Card Option	USB Device	Ethernet
EA7-T8C	8-inch ***C-more*** color TFT touch panel (8.4 inch viewable screen), 64K colors, 640 x 480 pixel VGA screen resolution, 400 MHz CPU, 24 VDC (20.4-28.8 VDC operating range), NEMA 4/4X, IP65 (when mounted correctly; for indoor use only), user replaceable backlight, 50,000 hour half-life. Built-in Ethernet and USB; supports CompactFlash.	10 MB	Yes	Yes	Yes
EA7-T10C	10-inch ***C-more*** color TFT touch panel (10.4 inch viewable screen), 64K colors, 640 x 480 pixel VGA screen resolution, 400 MHz CPU, 24 VDC (20.4-28.8 VDC operating range), NEMA 4/4X, IP65 (when mounted correctly; for indoor use only), user replaceable backlight, 50,000 hour half-life. Built-in Ethernet and USB; supports CompactFlash.	10 MB	Yes	Yes	Yes
EA7-T12C	12-inch ***C-more*** color TFT touch panel (12.1 inch viewable screen), 64K colors, 800 x 600 pixel SVGA screen resolution, 400 MHz CPU, 24 VDC (20.4-28.8 VDC operating range), NEMA 4/4X, IP65 (when mounted correctly; for indoor use only), user replaceable backlight, 50,000 hour half-life. Built-in Ethernet and USB; supports CompactFlash.	40 MB	Yes	Yes	Yes
EA7-T15C	15-inch ***C-more*** color TFT touch panel (15.0 inch viewable screen), 64K colors, 1024 x 768 XGA screen resolution, 400 MHz CPU, 24V DC (20.4-28.8 VDC operating range), NEMA 4/4X, IP65 (when mounted correctly; for indoor use only), user replaceable backlight, 50,000 hour half- life. Built-in Ethernet and USB; supports CompactFlash.	40 MB	Yes	Yes	Yes

Model Specifications

The following tables on the next four pages provide details to the Specifications of all C-more models. The specification tables are separated into the following groups:

- 6" Base Feature Models, EA7-S6M-R and EA7-T6CL-R; obsolete model EA7-S6C-R
- 6" Full Feature Models, EA7-S6M, and EA7-T6CL; obsolete models EA7-S6C and EA7-T6C
- 8" & 10" Full Feature Models, EA7-T8C and EA7-T10C
- 12" & 15" Full Feature Models, EA7-T12C & EA7-T15C

The following note applies to the Backlight Average Lifetime of 50,000 hours shown in the following tables:

***Note**: The backlight average lifetime is defined as the average usage time it takes before the brightness becomes 50% of the initial brightness. The lifetime of the backlight depends on the ambient temperature. The lifetime will decrease under low or high temperature usage.*

The following note applies to the Touch Panel Type specification shown in the following tables:

***Note**: The Touchscreen is designed to respond to a single touch. If it is touched at multiple points at the same time, an unexpected object may be activated.*

6” Base Feature Models

Specification \ Model	6” STN grayscale w/ base features	6” TFT color w/ base features
Part Number	**EA7-S6M-R**	**EA7-T6CL-R**
Display Actual Size and Type	5.7" STN grayscale	5.7" TFT color
Color Scale	15 shades of gray	65,536 colors
Display Viewing Area	4.54" x 3.4" [115.2 mm x 86.4 mm]	
Screen Pixels	320 x 240 (QVGA)	
Display Brightness	150 cd/m² (NITS)	270 cd/m² (NITS)
LCD Panel Dot Pitch	0.36 mm x 0.36 mm	
Backlight Average Lifetime	Approximately 50,000 hours (See note at bottom of page 2-3.)	
Backlight User Replaceable	No	
Touch Panel Type	Analog resistive (10-bit resolution, 1024 x 1024 touch area) (See note at bottom of page 2-3.)	
CPU Type	32-Bit RISC CPU (333 MHz)	
Battery	Replaceable battery – ADC Part # D2-BAT-1 (Manufacturer Part # CR2354)	
System Memory	SDRAM 32 MBytes	
System Flash Memory	FLASH 32 MBytes	
Backup Memory (SRAM)	Control data backup memory (SRAM) 256 KBytes	
Logging Data Memory	USB Pen Drive p/n SDCZ4-2048-A10 (Optional)	
Number of Screens	Up to 9999 with ver. 2.40 and later – limited by project memory (10 MBytes)	
Realtime Clock	Built into panel (PLC clock is still accessible if available)	
Calendar – Month/Day/Year	Yes - battery backup	
Screen Saver	Yes, backlight turns off after a 30–1500 minute adjustable time, or can be disabled	
Serial PLC Interface	Serial PLC Port: RS-232C/422/485 15-Pin D-sub (female)	
USB Port – Type B	Download/Program – USB Port – type B	
USB Port – Type A	Port for USB device options – type A	
Ethernet Port	not available	
Audio Line Out	not available	
CF Card – Slot #1	not available	
Expansion Assembly (p/n EA-EXP-OPT)	not available	
Supply Power	24 VDC, -15%, +20% (20.4–28.8 VDC operating range, minimum of 1.5 A) (Use the AC/DC Power Adapter, EA-AC, to power the touch panel from a 100-240 VAC, 50/60 Hz. power source.)	
Power Consumption	9 W @ 24 VDC	
Recommended DC Supply Fuse	2.5 A time delay, ADC p/n MDL2-5	
Operating Temperature	0 to 50 °C (32 to 122 °F); Maximum surrounding air temperature rating: 50 °C (122 °F)	
Storage Temperature	–20 to +60 °C (–4 to +140 °F)	
Humidity	10–85% RH (non-condensing)	
Noise Immunity	Noise voltage: 1000 Vp-p, Pulse width: 1 µs, Rise time: 1 ns	
Withstand Voltage	1000 VDC for 1 minute, between DC power supply input terminal and safety ground	
Insulation Resistance	Over 20 MΩ between DC power supply input terminal and safety ground	
Vibration	IEC61131-2 compliant, 10–57 Hz: 0.075 mm amplitude, 57–150 Hz 1.0 G: 10 sweep cycles per axis on each of 3 mutually perpendicular axes	
Shock	15 G peak, 11 ms duration, 2 shocks per axis, on 3 mutually perpendicular axes	
Environment	For use in Pollution Degree 2 environment	
Enclosure	Meets UL Type 4X, when mounted correctly. For indoor use only.	
Agency Approvals	UL, cUL, CE	
Dimensions	6.140" x 8.047" x 1.697" [156.0 mm x 204.4 mm x 43.1 mm]	
Weight	1.46 lb. [660 g]	1.43 lb. [650 g]

6” Full Feature Models

Specification / Model	6” STN grayscale w/ full features	6” TFT color w/ full features
Part Number	**EA7-S6M**	**EA7-T6CL**
Display Actual Size and Type	5.7" STN grayscale	5.7" TFT color
Color Scale	15 shades of gray	65,536 colors
Display Viewing Area	4.54" x 3.4" [115.2 mm x 86.4 mm]	
Screen Pixels	320 x 240 (QVGA)	
Display Brightness	150 cd/m² (NITS)	270 cd/m² (NITS)
LCD Panel Dot Pitch	0.36 mm x 0.36 mm	
Backlight Average Lifetime	Approximately 50,000 hours (See note at bottom of page 2-3.)	
Backlight User Replaceable	No	
Touch Panel Type	Analog resistive (10-bit resolution, 1024 x 1024 touch area) (See note at bottom of page 2-3.)	
CPU Type	32-Bit RISC CPU (333 MHz)	
Battery	Replaceable battery – ADC Part # D2-BAT-1 (Manufacturer Part # CR2354)	
System Memory	SDRAM 32 MBytes	
System Flash Memory	FLASH 32 MBytes	
Backup Memory (SRAM)	Control data backup memory (SRAM) 256 KBytes	
Logging Data Memory	CompactFlash Memory Card p/n EA-CF-CARD, industrial grade, high speed (Optional) or USB Pen Drive p/n SDCZ4-2048-A10 (Optional)	
Number of Screens	Up to 9999 with ver. 2.40 and later – limited by project memory (10 MBytes)	
Realtime Clock	Built into panel (PLC clock is still accessible if available)	
Calendar – Month/Day/Year	Yes - battery backup	
Screen Saver	Yes, backlight turns off after a 30–1500 minute adjustable time, or can be disabled	
Serial PLC Interface	Serial PLC Port: RS-232C/422/485 15-Pin D-sub (female)	
USB Port – Type B	Download/Program – USB Port – type B	
USB Port – Type A	Port for USB device options – type A	
Ethernet Port	Ethernet 10/100 Base-T	
Audio Line Out	Audio Line Out, 1 volt rms, stereo – requires amplifier and speaker(s)	
CF Card – Slot #1	Optional: CompactFlash Card p/n EA-CF-CARD, slot #1 located on top side of touch panel.	
Expansion Assembly (p/n EA-EXP-OPT)	Optional: Use the CF Card Adapter p/n EA-CF-IF in the right slot of the expansion assembly for installing CF card - Slot #2. The left slot of the expansion assembly is for future options.	
Supply Power	24 VDC, -15%, +20% (20.4–28.8 VDC operating range, minimum of 1.5 A) (Use the AC/DC Power Adapter, EA-AC, to power the touch panel from a 100-240 VAC, 50/60 Hz. power source.)	
Power Consumption	10 W @ 24 VDC	11 W @ 24 VDC
Recommended DC Supply Fuse	2.5 A time delay, ADC p/n MDL2-5	
Operating Temperature	0 to 50 °C (32 to 122 °F); Maximum surrounding air temperature rating: 50 °C (122 °F)	
Storage Temperature	–20 to +60 °C (–4 to +140 °F)	
Humidity	10–85% RH (non-condensing)	
Noise Immunity	Noise voltage: 1000 Vp-p, Pulse width: 1 µs, Rise time: 1 ns	
Withstand Voltage	1000 VDC for 1 minute, between DC power supply input terminal and safety ground	
Insulation Resistance	Over 20 MΩ between DC power supply input terminal and safety ground	
Vibration	IEC61131-2 compliant, 10–57 Hz: 0.075 mm amplitude, 57–150 Hz 1.0 G: 10 sweep cycles per axis on each of 3 mutually perpendicular axes	
Shock	15 G peak, 11 ms duration, 2 shocks per axis, on 3 mutually perpendicular axes	
Environment	For use in Pollution Degree 2 environment	
Enclosure	Meets UL Type 4X when mounted correctly. For indoor use only.	
Agency Approvals	UL, cUL, CE	
Dimensions	6.140" x 8.047" x 1.697" [156.0 mm x 204.4 mm x 43.1 mm]	
Weight	1.50 lb. [680 g]	1.48 lb. [670 g]

6” Obsolete Models

Specification / Model	6” STN color w/ base features
Part Number	**EA7-S6C-R**
Display Actual Size and Type	5.7" STN color
Color Scale	256 colors
Display Viewing Area	4.54" x 3.4" [115 2 mm x 86.4 mm]
Screen Pixels	320 x 240 (QVGA)
Display Brightness	200 cd/m² (NITS)
LCD Panel Dot Pitch	0.36 mm x 0.36 mm
Backlight Average Lifetime	Approximately 50,000 hours (See note at bottom of page 2-3.)
Backlight User Replaceable	No
Touch Panel Type	Analog resistive (10-bit resolution, 1024 x 1024 touch area) (See note at bottom of page 2-3.)
CPU Type	32-Bit RISC CPU (333 MHz)
Battery	Replaceable battery – ADC Part # D2-BAT-1 (Manufacturer Part # CR2354)
System Memory	SDRAM 32 MBytes
System Flash Memory	FLASH 32 MBytes
Backup Memory (SRAM)	Control data backup memory (SRAM) 256 KBytes
Logging Data Memory	USB Pen Drive p/n SDCZ4-2048-A10 (Optional)
Number of Screens	Up to 9999 with ver. 2.40 and later – limited by project memory (10Mbytes)
Realtime Clock	Built into panel (PLC clock is still accessible if available)
Calendar – Month/Day/Year	Yes - battery backup
Screen Saver	Yes, backlight turns off after a 30–1500 minute adjustable time, or can be disabled
Serial PLC Interface	Serial PLC Port: RS-232C/422/485 15-Pin D-sub (female)
USB Port – Type B	Download/Program – USB Port – type B
USB Port – Type A	Port for USB device options – type A
Ethernet Port	not available
Audio Line Out	not available
CF Card – Slot #1	not available
Expansion Assembly (p/n EA-EXP-OPT)	not available
Supply Power	24 VDC, -15%, +20% (20.4–28.8 VDC operating range, minimum of 1.5 A) (Use the AC/DC Power Adapter, EA-AC, to power the touch panel from a 100-240 VAC, 50/60 Hz. power source.)
Power Consumption	10 W @ 24 VDC
Recommended DC Supply Fuse	2.5 A time delay, ADC p/n MDL2-5
Operating Temperature	0 to 50 °C (32 to 122 °F); Maximum surrounding air temperature rating: 50 °C (122 °F)
Storage Temperature	–20 to +60 °C (–4 to +140 °F)
Humidity	10–85% RH (non-condensing)
Noise Immunity	Noise voltage: 1000 Vp-p, Pulse width: 1 µs, Rise time: 1 ns
Withstand Voltage	1000 VDC for 1 minute, between DC power supply input terminal and safety ground
Insulation Resistance	Over 20 MΩ between DC power supply input terminal and safety ground
Vibration	IEC61131-2 compliant, 10–57 Hz: 0.075 mm amplitude, 57–150 Hz 1.0 G: 10 sweep cycles per axis on each of 3 mutually perpendicular axes
Shock	15 G peak, 11 ms duration, 2 shocks per axis, on 3 mutually perpendicular axes
Environment	For use in Pollution Degree 2 environment
Enclosure	Meets UL Type 4X, when mounted correctly. For indoor use only.
Agency Approvals	UL, cUL, CE
Dimensions	6.140" x 8.047" x 1.697" [156.0 mm x 204.4 mm x 43.1 mm]
Weight	1.39 lb. [630 g]

6” Obsolete Models (cont’d)

Specification / Model	6” STN color w/ full features	6” TFT color w/ full features
Part Number	**EA7-S6C**	**EA7-T6C**
Display Actual Size and Type	5.7" STN color	5.7" TFT color
Color Scale	256 colors	65,536 colors
Display Viewing Area	4.54" x 3.4" [115 2 mm x 86.4 mm]	
Screen Pixels	320 x 240 (QVGA)	
Display Brightness	200 cd/m² (NITS)	270 cd/m² (NITS)
LCD Panel Dot Pitch	0.36 mm x 0.36 mm	
Backlight Average Lifetime	Approximately 50,000 hours (See note at bottom of page 2-3.)	
Backlight User Replaceable	No	
Touch Panel Type	Analog resistive (10-bit resolution, 1024 x 1024 touch area) (See note at bottom of page 2-3.)	
CPU Type	32-Bit RISC CPU (333 MHz)	
Battery	Replaceable battery – ADC Part # D2-BAT-1 (Manufacturer Part # CR2354)	
System Memory	SDRAM 32 MBytes	
System Flash Memory	FLASH 32 MBytes	
Backup Memory (SRAM)	Control data backup memory (SRAM) 256 KBytes	
Logging Data Memory	CompactFlash Memory Card p/n EA-CF-CARD, industrial grade, high speed (Optional) or USB Pen Drive p/n SDCZ4-2048-A10 (Optional)	
Number of Screens	Up to 9999 with ver. 2.40 and later – limited by project memory (10Mbytes)	
Realtime Clock	Built into panel (PLC clock is still accessible if available)	
Calendar – Month/Day/Year	Yes - battery backup	
Screen Saver	Yes, backlight turns off after a 30–1500 minute adjustable time, or can be disabled	
Serial PLC Interface	Serial PLC Port: RS-232C/422/485 15-Pin D-sub (female)	
USB Port – Type B	Download/Program – USB Port – type B	
USB Port – Type A	Port for USB device options – type A	
Ethernet Port	Ethernet 10/100 Base-T	
Audio Line Out	Audio Line Out, 1 volt rms, stereo – requires amplifier and speaker(s)	
CF Card – Slot #1	Optional: CompactFlash Card p/n EA-CF-CARD, slot #1 located on top side of touch panel.	
Expansion Assembly (p/n EA-EXP-OPT)	Adapter p/n EA-CF-IF in the right slot of the expansion assembly for installing CF card - Slot #2. The left slot of the expansion assembly is for future options.	
Supply Power	24 VDC, -15%, +20% (20.4–28.8 VDC operating range, minimum of 1.5 A) (Use the AC/DC Power Adapter, EA-AC, to power the touch panel from a 100-240 VAC, 50/60 Hz. power source.)	
Power Consumption	11 W @ 24 VDC	13 W @ 24 VDC
Recommended DC Supply Fuse	2.5 A time delay, ADC p/n MDL2-5	
Operating Temperature	0 to 50 °C (32 to 122 °F); Maximum surrounding air temperature rating: 50 °C (122 °F)	
Storage Temperature	–20 to +60 °C (–4 to +140 °F)	
Humidity	10–85% RH (non-condensing)	
Noise Immunity	Noise voltage: 1000 Vp-p, Pulse width: 1 µs, Rise time: 1 ns	
Withstand Voltage	1000 VDC for 1 minute, between DC power supply input terminal and safety ground	
Insulation Resistance	Over 20 MΩ between DC power supply input terminal and safety ground	
Vibration	IEC61131-2 compliant, 10–57 Hz: 0.075 mm amplitude, 57–150 Hz 1.0 G: 10 sweep cycles per axis on each of 3 mutually perpendicular axes	
Shock	15 G peak, 11 ms duration, 2 shocks per axis, on 3 mutually perpendicular axes	
Environment	For use in Pollution Degree 2 environment	
Enclosure	Meets UL Type 4X when mounted correctly. For indoor use only.	
Agency Approvals	UL, cUL, CE	
Dimensions	6.140" x 8.047" x 1.697" [156.0 mm x 204.4 mm x 43.1 mm]	
Weight	1.43 lb. [650 g]	1.52 lb. [690 g]

8” and 10” Full Feature Models

Specifications / Model	8” TFT color w/ full features	10” TFT color w/ full features
Part Number	**EA7-T8C**	**EA7-T10C**
Display Actual Size and Type	8.4" TFT color	10.4" TFT color
Color Scale	65,536 colors	
Display Viewing Area	6.73" x 5.05" [170 9 mm x 128.2 mm]	8.31" x 6.24" [211.2 mm x 158.4 mm]
Screen Pixels	640 x 480 (VGA)	
Display Brightness	300 cd/m² (NITS)	270 cd/m² (NITS)
LCD Panel Dot Pitch	0.267 mm x 0.267 mm	0.33 mm x 0.33 mm
Backlight Average Lifetime	Approximately 50,000 hours (See note at bottom of page 2-3.)	
Backlight User Replaceable	Yes - Part No. EA-xx-BULB, xx = panel size	
Touch Panel Type	Analog resistive (10-bit resolution, 1024 x 1024 touch area) (See note at bottom of page 2-3.)	
CPU Type	32-Bit RISC CPU (400 MHz)	
Battery	Replaceable battery – ADC Part # D2-BAT-1 (Manufacturer Part # CR2354)	
System Memory	SDRAM 32 MBytes	
System Flash Memory	FLASH 32 MBytes	
Backup Memory (SRAM)	Control data backup memory (SRAM) 256 KBytes	
Logging Data Memory	CompactFlash Memory Card p/n EA-CF-CARD, industrial grade, high speed (Optional) or USB Pen Drive p/n SDCZ4-2048-A10 (Optional)	
Number of Screens	Up to 9999 with ver. 2.40 and later – limited by project memory (10 MBytes)	
Realtime Clock	Built into panel (PLC clock is still accessible if available)	
Calendar – Month/Day/Year	Yes - battery backup	
Screen Saver	Yes, backlight turns off after a 30–1500 minute adjustable time, or can be disabled	
Serial PLC Interface	Serial PLC Port: RS-232C/422/485 15-Pin D-sub (female)	
USB Port – Type B	Download/Program – USB Port – type B	
USB Port – Type A	Port for USB device options – type A	
Ethernet Port	Ethernet 10/100 Base-T	
Audio Line Out	Audio Line Out, 1 volt rms, stereo – requires amplifier and speaker(s)	
CF Card – Slot #1	Optional: CompactFlash Card p/n EA-CF-CARD, slot #1 located on top side of touch panel.	
Expansion Assembly (p/n EA-EXP-OPT)	Optional: Use the CF Card Adapter p/n EA-CF-IF in the right slot of the expansion assembly for installing CF card - Slot #2. The left slot of the expansion assembly is for future options.	
Supply Power	24 VDC, -15%, +20% (20.4–28.8 VDC operating range, minimum of 1.5 A) (Use the AC/DC Power Adapter, EA-AC, to power the touch panel from a 100-240 VAC, 50/60 Hz. power source.)	
Power Consumption	15 W @ 24 VDC	17 W @ 24 VDC
Recommended DC Supply Fuse	2.5 A time delay, ADC p/n MDL2-5	
Operating Temperature	0 to 50 °C (32 to 122 °F); Maximum surrounding air temperature rating: 50 °C (122 °F)	
Storage Temperature	–20 to +60 °C (–4 to +140 °F)	
Humidity	10–85% RH (non-condensing)	
Noise Immunity	Noise voltage: 1000 Vp-p, Pulse width: 1 µs, Rise time: 1 ns	
Withstand Voltage	1000 VDC for 1 minute, between DC power supply input terminal and safety ground	
Insulation Resistance	Over 20 MΩ between DC power supply input terminal and safety ground	
Vibration	IEC61131-2 compliant, 10–57 Hz: 0.075 mm amplitude, 57–150 Hz 1.0 G: 10 sweep cycles per axis on each of 3 mutually perpendicular axes	
Shock	15 G peak, 11 ms duration, 2 shocks per axis, on 3 mutually perpendicular axes	
Environment	For use in Pollution Degree 2 environment	
Enclosure	Meets UL Type 4X when mounted correctly. For indoor use only.	
Agency Approvals	UL, cUL, CE	
Dimensions	8.748" x 10.894" x 2.053" [222.2 mm x 276.7 mm x 52.1 mm]	10.669" x 13.661" x 2.079" [271.0 x 347.0 x 52.8 mm]
Weight	2.60 lb. [1,180 g]	3.55 lb. [1,610 g]

12” and 15” Full Feature Models

Specifications / Model	12” TFT color w/ full features	15” TFT color w/ full features
Part Number	**EA7-T12C**	**EA7-T15C**
Display Actual Size and Type	12.1" TFT color	15.0" TFT color
Color Scale	65,536 Colors	
Display Viewing Area	9.47" x 7.62" [240.6 mm x 184.5 mm]	11.97" x 8.98" [304.1 mm x 228.1 mm]
Screen Pixels	800 x 600 (SVGA)	1024 x 768 (XGA)
Display Brightness	260 cd/m² (NITS)	220 cd/m² (NITS)
LCD Panel Dot Pitch	0.267 mm x 0.267 mm	0.297 mm x 0.297 mm
Backlight Average Lifetime	Approximately 50,000 hours (See note at bottom of page 2-3.)	
Backlight User Replaceable	Yes - Part No. EA-xx-BULB, xx = panel size	
Touch Panel Type	Analog resistive (12-bit resolution, 4096 x 4096 touch area) (See note at bottom of page 2-3.)	
CPU Type	32-Bit RISC CPU (400 MHz) Plus Graphic Accelerator Chip	
Battery	Replaceable battery – ADC Part # D2-BAT-1 (Manufacturer Part # CR2354)	
System Memory	SDRAM 64 MBytes	
System Flash Memory	FLASH 64 MBytes	
Backup Memory (SRAM)	Control data backup memory (SRAM) 256 KBytes	
Logging Data Memory	CompactFlash Memory Card p/n EA-CF-CARD, industrial grade, high speed (Optional) or USB Pen Drive p/n SDCZ4-2048-A10 (Optional)	
Number of Screens	Up to 9999 with ver. 2.40 and later – limited by project memory (10 MBytes))	
Realtime Clock	Built into panel (PLC clock is still accessible if available)	
Calendar – Month/Day/Year	Yes - battery backup	
Screen Saver	Yes, backlight turns off after a 30–1500 minute adjustable time, or can be disabled	
Serial PLC Interface	Serial PLC Port: RS-232C/422/485 15-Pin D-sub (female)	
USB Port – Type B	Download/Program – USB Port – type B	
USB Port – Type A	Port for USB device options – type A	
Ethernet Port	Ethernet 10/100 Base-T	
Audio Line Out	Audio Line Out, 1 volt rms, stereo – requires amplifier and speaker(s)	
CF Card – Slot #1	Optional: CompactFlash Card p/n EA-CF-CARD, slot #1 located on top side of touch panel.	
Expansion Assembly (p/n EA-EXP-OPT)	Optional: Use the CF Card Adapter p/n EA-CF-IF in the right slot of the expansion assembly for installing CF card - Slot #2. The left slot of the expansion assembly is for future options.	
Supply Power	24 VDC, -15%, +20% (20.4–28.8 VDC operating range, minimum of 1.5 A) (Use the AC/DC Power Adapter, EA-AC, to power the touch panel from a 100-240 VAC, 50/60 Hz. power source.)	
Power Consumption	20 W @ 24 VDC	33 W @ 24 VDC
Recommended DC Supply Fuse	4.0 A time delay, ADC MDL4	
Operating Temperature	0 to 50 °C (32 to 122 °F); Maximum surrounding air temperature rating: 50 °C (122 °F)	
Storage Temperature	–20 to +60 °C (–4 to +140 °F)	
Humidity	10–85% RH (non-condensing)	
Noise Immunity	Noise voltage: 1000 Vp-p, Pulse width: 1 µs, Rise time: 1 ns	
Withstand Voltage	1000 VDC for 1 minute, between DC power supply input terminal and safety ground	
Insulation Resistance	Over 20 MΩ between DC power supply input terminal and safety ground	
Vibration	IEC61131-2 compliant, 10–57 Hz: 0.075 mm amplitude, 57–150 Hz 1.0 G: 10 sweep cycles per axis on each of 3 mutually perpendicular axes	
Shock	15 G peak, 11 ms duration, 2 shocks per axis, on 3 mutually perpendicular axes	
Environment	For use in Pollution Degree 2 environment	
Enclosure	Meets UL Type 4X when mounted correctly. For indoor use only.	
Agency Approvals	UL, cUL, CE	
Dimensions	11.024" x 13.336" x 2.075" [280.0 x 339.5 x 52.7 mm]	13.000" x 16.748" x 1.0481" [330.2 x 425.4 x 54.0 mm]
Weight	4.59 lb. [2,080 g]	7.01 lb. [3,180 g]

EA7-S6M-R, S6C-R, T6CL-R, S6M, S6C, T6C, T6CL

Dimensions:

All the necessary mounting hardware is provided with the touch panel. Use the two (2) mounting clips and screws to secure the touch panel to the cabinet or enclosure surface. A template is provided for marking the cutout dimensions on the mounting surface.

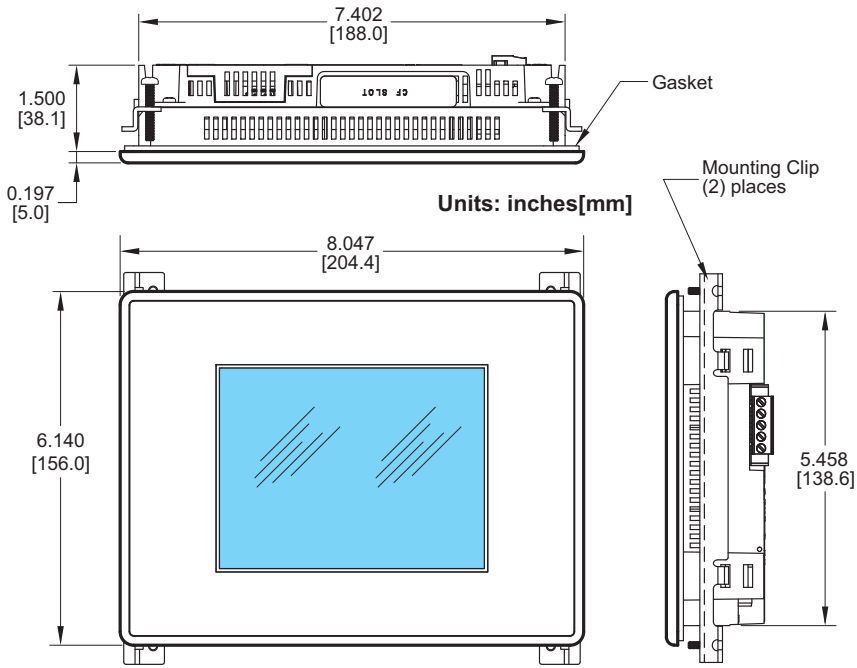

Enclosure Mounting Thickness Ranges and Mounting Clip Screw Torque

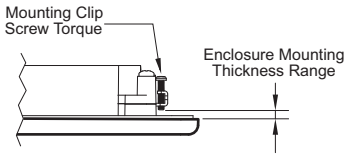

Touch Panel Size	Enclosure Thickness Range	Mounting Clip Screw Torque
6" – lower mounting clip position	0.039 - 0.24 inch [1 – 6 mm]	35 ~ 50 oz-in [0.25 ~ 0.35 Nm]
6" – upper mounting clip position	0.20 - 0.63 inch [5 – 16 mm]	35 ~ 50 oz-in [0.25 ~ 0.35 Nm]

EA7-S6M-R, S6C-R, T6CL-R, S6M, S6C, T6C, T6CL

Ports & Memory Expansion:

Base Feature Model
EA7-S6M-R and EA7-T6CL-R

Also obsolete model
EA7-S6C-R

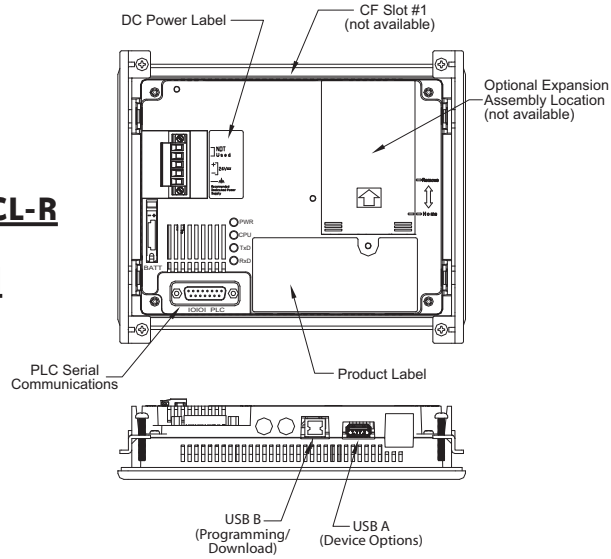

Full Feature Model
EA7-S6M and EA7-T6CL

Also obsolete models
EA7-S6C and EA7-T6C

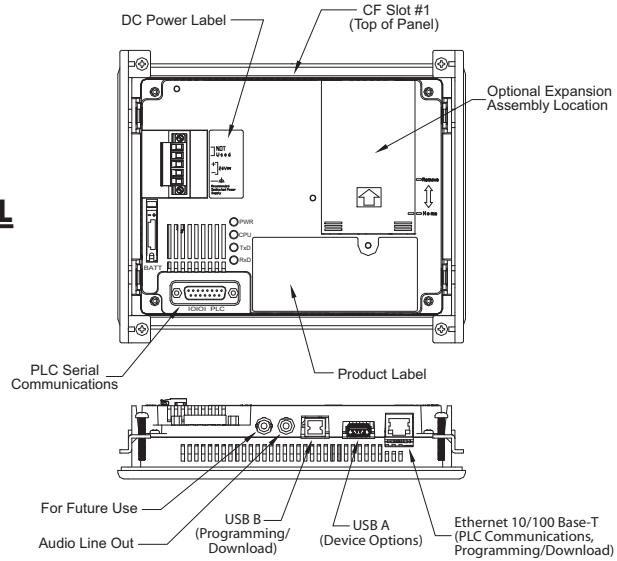

EA7-T8C

Dimensions:

All the necessary mounting hardware is provided with the touch panel. Use the six (6) mounting clips and screws to secure the touch panel to the cabinet or enclosure surface. A template is provided for marking the cutout dimensions on the mounting surface.

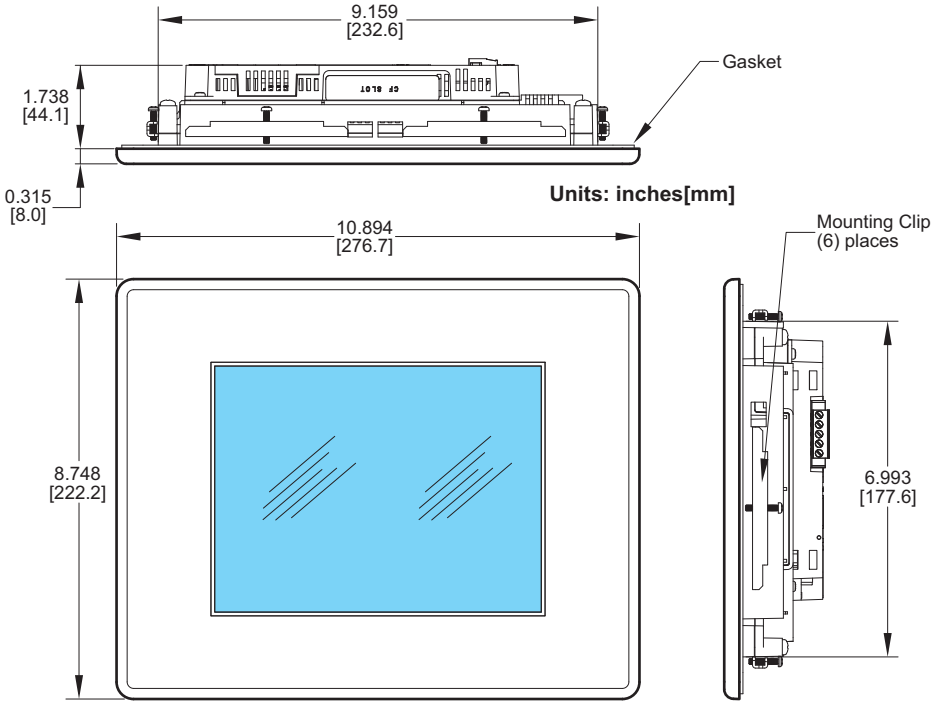

Enclosure Mounting Thickness Ranges and Mounting Clip Screw Torque

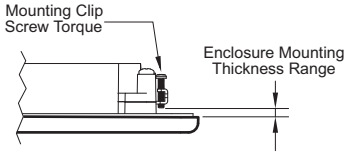

Touch Panel Size	Enclosure Thickness Range	Mounting Clip Screw Torque
8”, 10”, 12” & 15”	0.039 - 0.20 inch [1 – 5 mm]	42 ~ 57 oz-in [0.3 ~ 0.4 Nm]

EA7-T8C

Ports & Memory Expansion:

Full Feature Model
EA7-T8C

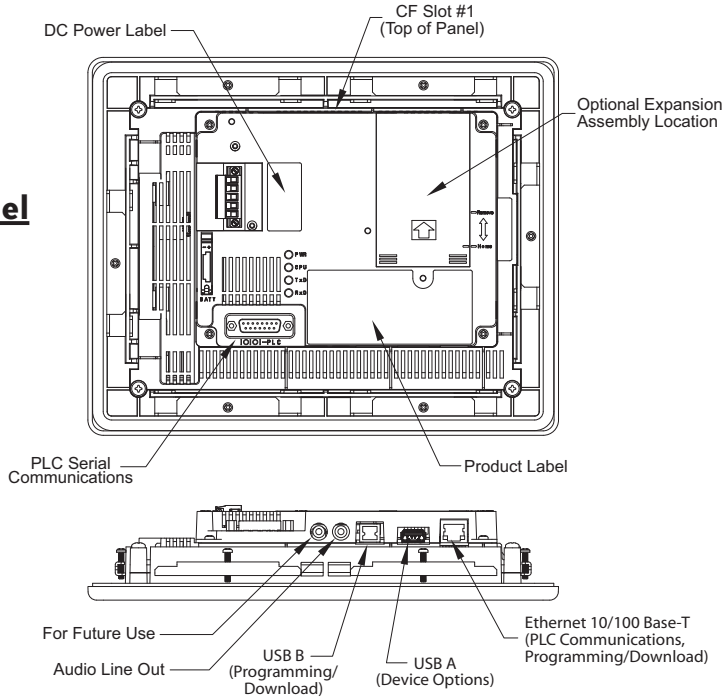

EA7-T10C

Dimensions:

All the necessary mounting hardware is provided with the touch panel. Use the six (6) mounting clips and screws to secure the touch panel to the cabinet or enclosure surface. A template is provided for marking the cutout dimensions on the mounting surface.

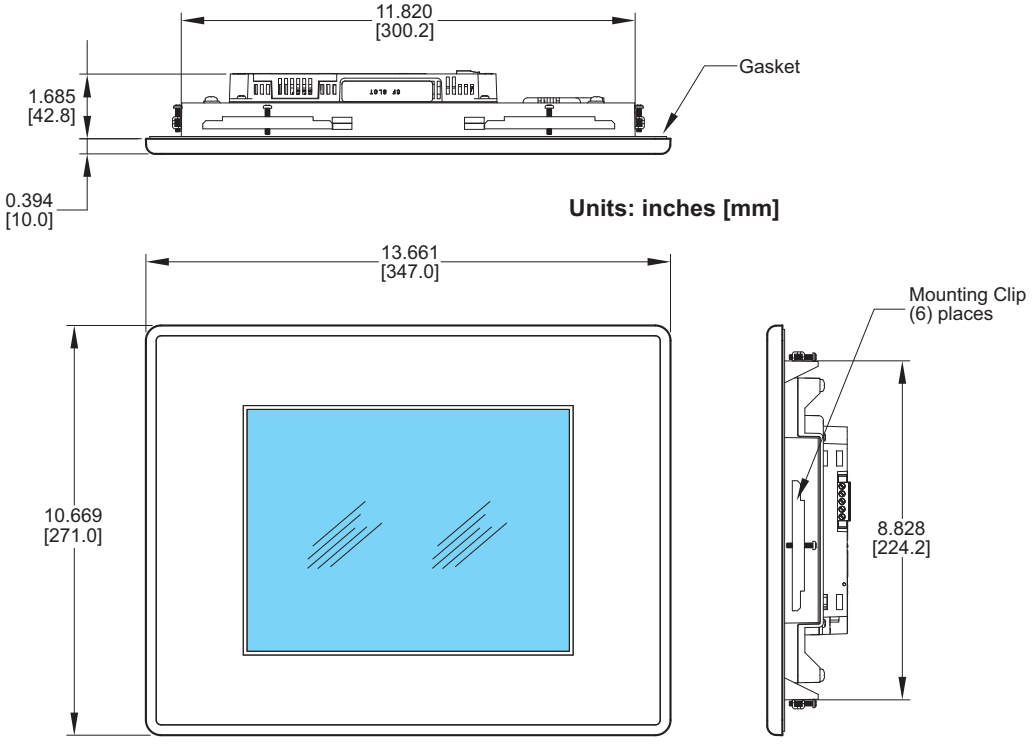

Enclosure Mounting Thickness Ranges and Mounting Clip Screw Torque

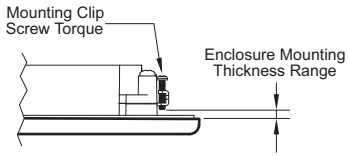

Touch Panel Size	Enclosure Thickness Range	Mounting Clip Screw Torque
8”, 10”, 12” & 15”	0.039 - 0.20 inch [1 – 5 mm]	42 ~ 57 oz-in [0.3 ~ 0.4 Nm]

EA7-T10C

Ports & Memory Expansion:

Full Feature Model
EA7-T10C

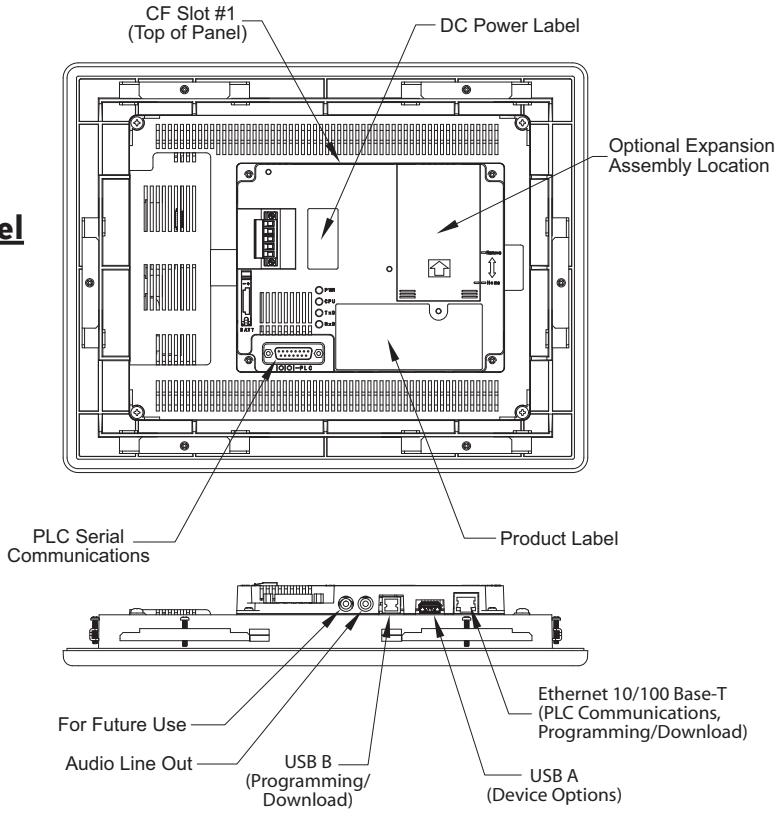

EA7-T12C

Dimensions:

All the necessary mounting hardware is provided with the touch panel. Use the six (6) mounting clips and screws to secure the touch panel to the cabinet or enclosure surface. A template is provided for marking the cutout dimensions on the mounting surface.

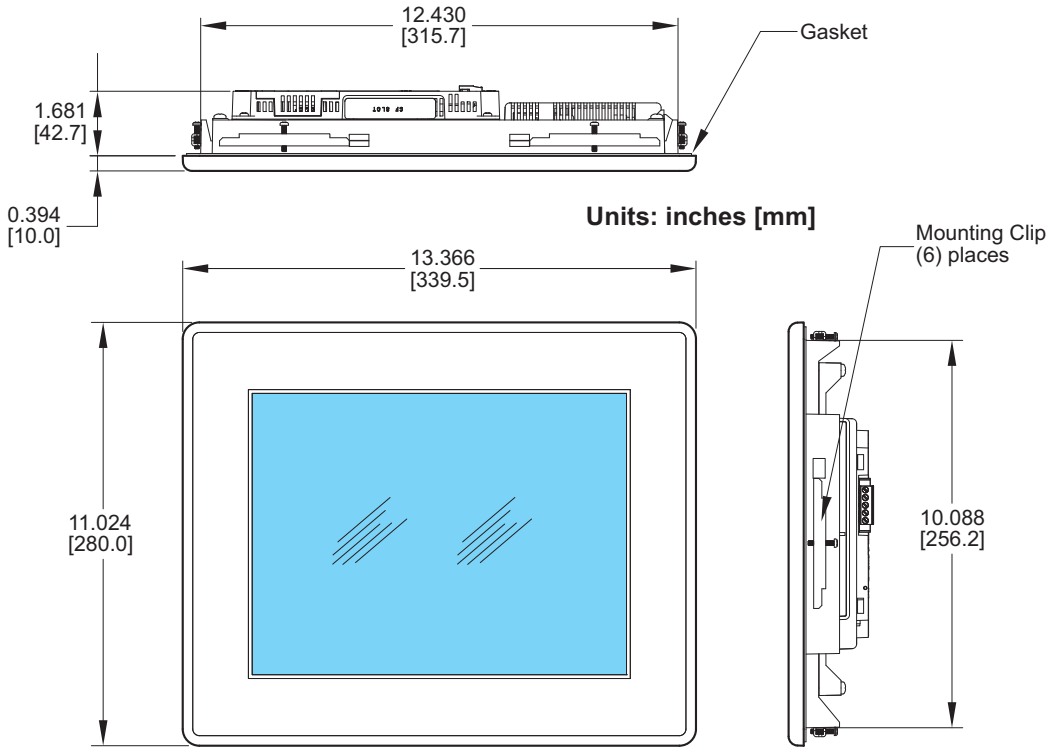

Enclosure Mounting Thickness Ranges and Mounting Clip Screw Torque

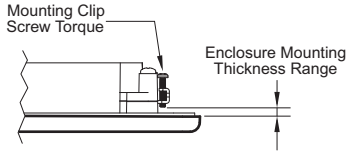

Touch Panel Size	Enclosure Thickness Range	Mounting Clip Screw Torque
8”, 10”, 12” & 15”	0.039 - 0.20 inch [1 – 5 mm]	42 ~ 57 oz-in [0.3 ~ 0.4 Nm]

EA7-T12C

Ports & Memory Expansion:

Full Feature Model
EA7-T12C

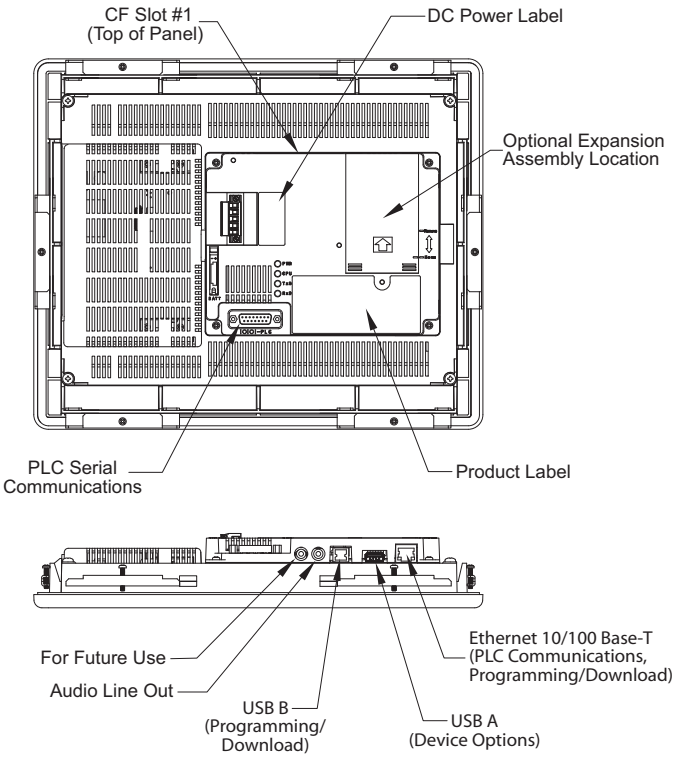

EA7-T15C

Dimensions:

All the necessary mounting hardware is provided with the touch panel. Use the eight (8) mounting clips and screws to secure the touch panel to the cabinet or enclosure surface. A template is provided for marking the cutout dimensions on the mounting surface.

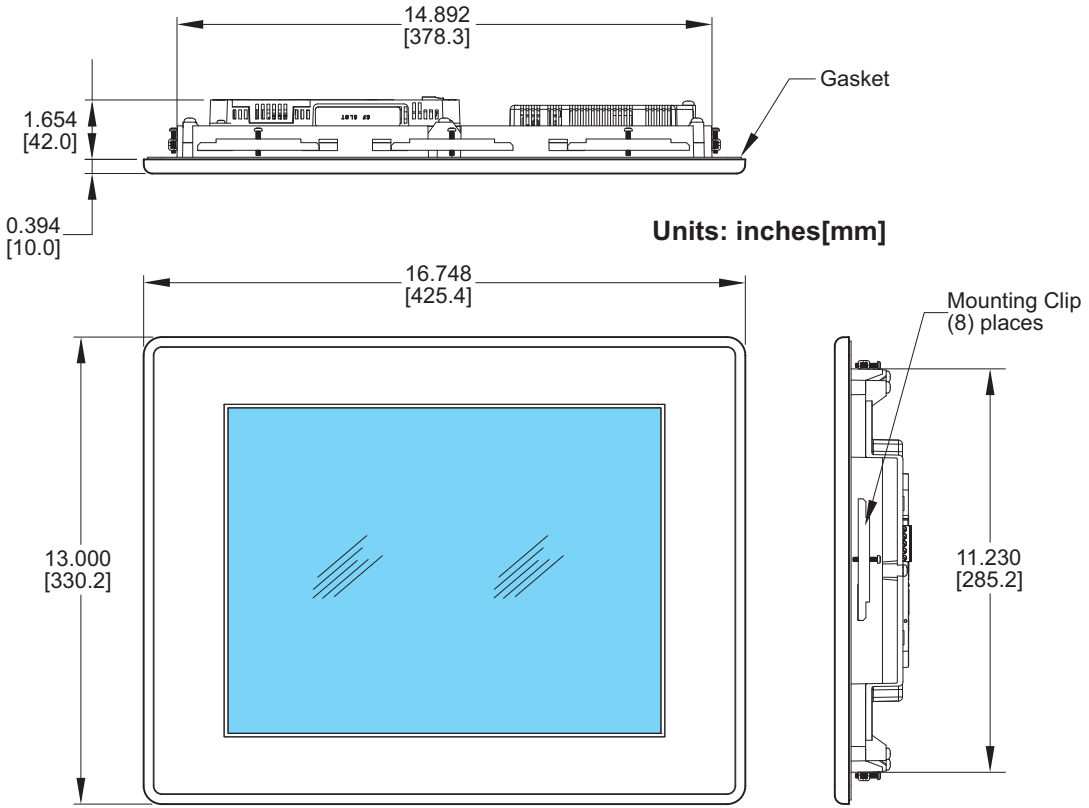

Enclosure Mounting Thickness Ranges and Mounting Clip Screw Torque

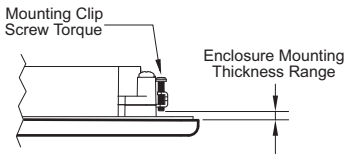

Touch Panel Size	Enclosure Thickness Range	Mounting Clip Screw Torque
8”, 10”, 12” & 15”	0.039 - 0.20 inch [1 – 5 mm]	42 ~ 57 oz-in [0.3 ~ 0.4 Nm]

EA7-T15C

Ports & Memory Expansion:

Full Feature Model
EA7-T15C

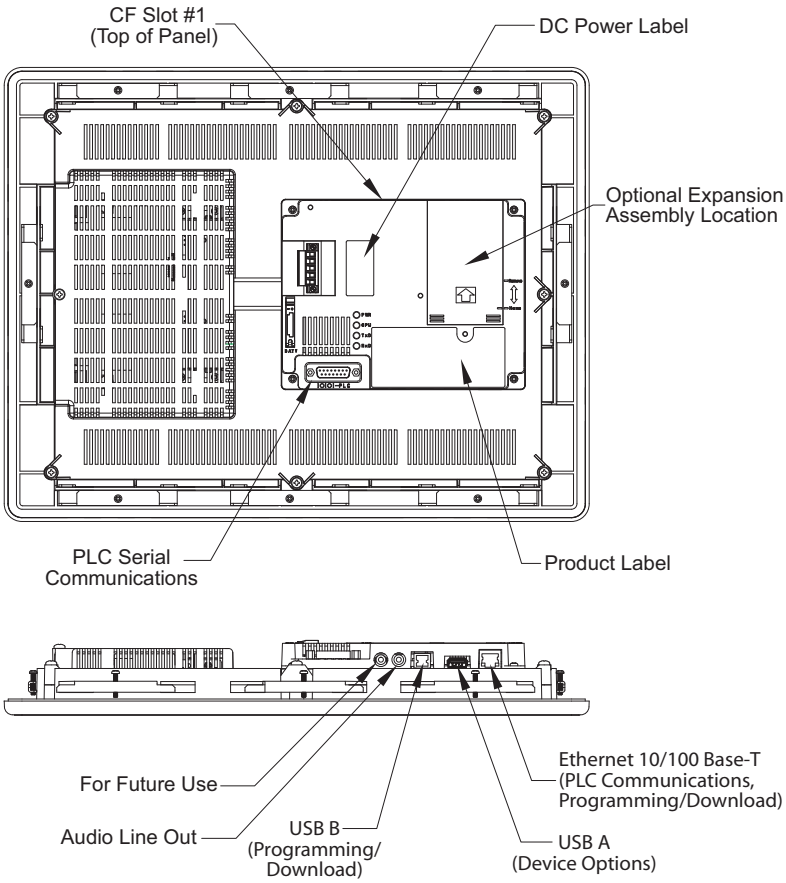

Mounting Clearances

The following drawing shows the mounting clearances for the ***C-more*** touch panel. There should be a minimum of 4 inches of space between all sides of the panel and the nearest object or obstruction and at least 2 inches between the rear of the panel and the nearest object or obstruction.

Note: *Make sure the touch panel is mounted on a vertical surface to allow convection air flow for proper cooling.*

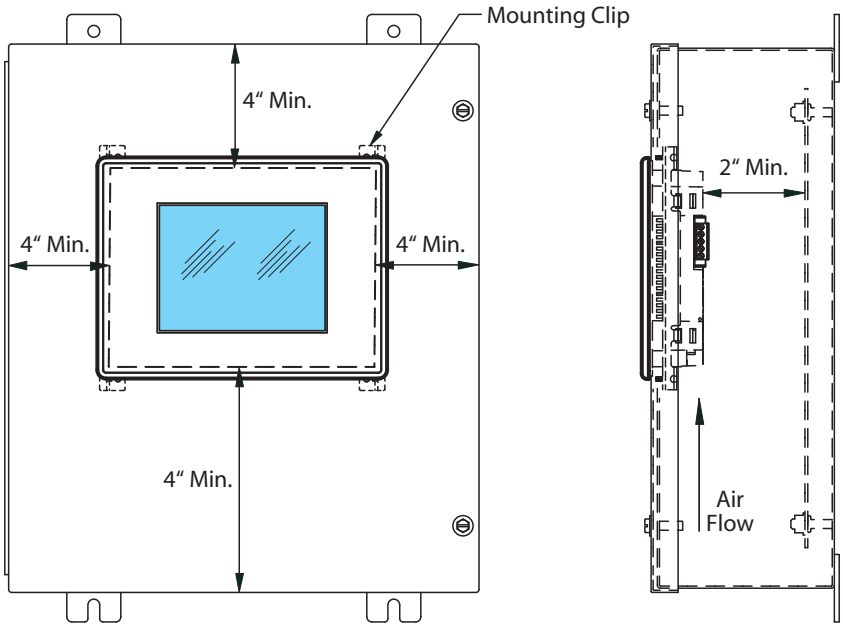

Front View

Side View

Communications Ports

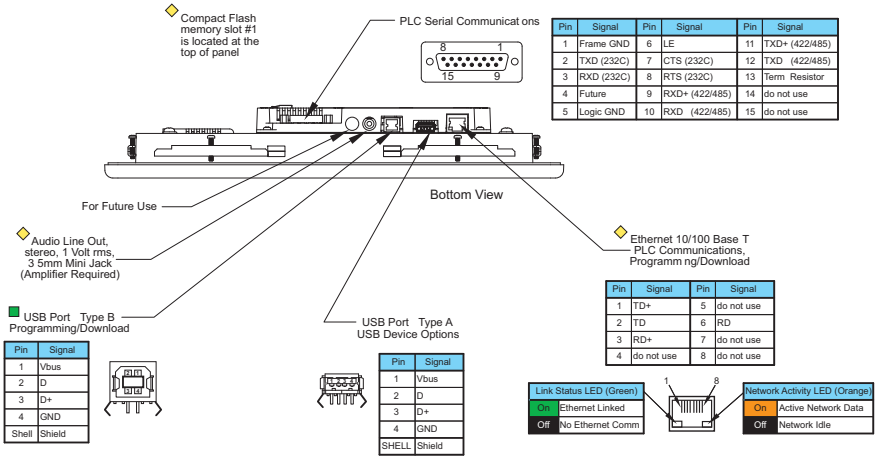

Pin	Signal	Pin	Signal	Pin	Signal
1	Frame GND	6	LE	11	TXD+ (422/485)
2	TXD (232C)	7	CTS (232C)	12	TXD (422/485)
3	RXD (232C)	8	RTS (232C)	13	Term Resistor
4	Future	9	RXD+ (422/485)	14	do not use
5	Logic GND	10	RXD (422/485)	15	do not use

Pin	Signal	Pin	Signal
1	TD+	5	do not use
2	TD	6	RD
3	RD+	7	do not use
4	do not use	8	do not use

Pin	Signal
1	Vbus
2	D
3	D+
4	GND
Shell	Shield

Pin	Signal
1	Vbus
2	D
3	D+
4	GND
SHELL	Shield

Note Device is not available on Base Feature touch panels, part numbers EA7 S6M R and EA7 T6CL R

Note Use USB Programming Cable, for example p/n USB CBL AB15

Ethernet Port

The Ethernet port can be used several ways: for programming the panel (downloading a project), for PLC communication, and for the advanced features, such as sending e-mail, web server, FTP access, and allowing users to access and control the panel remotely.

The Ethernet connector is an RJ-45 Module jack type. It has a green and an orange LED.

- The orange LED indicates the Ethernet communication status. It illuminates when there is data activity on the network.
- The green LED indicates link status and illuminates when a link is established.

Ethernet connections to devices:

- *Direct*LOGIC Ethernet
- Modbus TCP/IP
- Allen-Bradley EtherNet/IP™ Server - Generic I/O Messaging (ControlLogix™, CompactLogix™, and FlexLogix™)
- Allen-Bradley EtherNet/IP Client - Tag Based (ControlLogix, CompactLogix, and FlexLogix)
- Allen-Bradley EtherNet/IP Client - (MicroLogix and SLC5)
- Entivity Modbus TCP/IP
- Mitsubishi Q/QnA Ethernet
- Omron Ethernet FINS
- Siemens Ethernet ISO over TCP

Note: *The base panels (-R part numbers) do not include an Ethernet port, and do not have these capabilities.*

Refer to http://cmore.automationdirect.com for the latest driver information.

Communications Ports (cont'd)

USB Port B

Program *C-more* via the USB programming port. It's fast and easy, with no baud rate settings, parity, or stop bits to worry about. We stock standard USB cables for your convenience, such as part no. USB-CBL-AB15. USB Port B can be used to upload or download projects to and from a PC (personnel computer).

USB Port A

The Universal Serial Bus (USB) type A port is a standard feature for all models and can be used to connect various USB HID (Human Input Device) devices to the panel, such as:

- USB pen drives, (ADC p/n SDCZ4-2048-A10)
- USB keyboards
- USB barcode scanners
- USB card scanners

C-more can log data to the USB pen drive as well as load projects to the panel from the pen drive. You can also back up project files and panel firmware.

Sound Interface (Audio Line Out)

When attached to an amplifier and speaker(s), *C-more* can play warning sounds, or pre-recorded messages such as: "conveyor is jammed". *C-more* supports WAV type files. The output is stereo. See the next page for the WAV file specifications. Various "Objects" in the *C-more* programming software support sounds. Sound files are stored in the sound library. See the *C-more* programming software help support for additional details.

PLC Port

The PLC port is an RS-232C, RS-422A or RS-485A female 15-pin D-sub connector. Use this port for serial connections to PLCs. The port supports the following PLC protocols:

- All *AutomationDirect.com* PLCs:
  - CLICK
  - *Direct*LOGIC K-sequence
  - *Direct*NET
  - Modbus (Koyo Addressing)
- Allen Bradley:
  - DF1 Full & Half Duplex
  - DF1 Full & Half Duplex - Tag Based
  - PLC5 DF1
  - DH485
- Modbus RTU
- Entivity Modbus RTU
- GE SNPX (90/30, 90/70, Micro 90, VersaMax Micro)
- Omron:
  - Host Link (C200 Adapter, C500)
  - FINS (CJ1, CS1)
- Mitsubishi
  - Melsec FX
  - QnA
- Siemens PPI (S7-200 CPU)

Audio WAV File Specifications

The *C-more* Audio Line Out port supports the following WAV file specifications:

Audio Format (codec): PCM

Audio Sample Rate: 11 kHz, 22 kHz or 44 kHz

Channels: 1 (mono) or 2 (stereo)

Audio Sample Size: 8-bit or 16-bit

Memory Organization

The following diagram outlines the relationships between the internal memory of the panel and any external memory device. It also shows how the various memory areas can be used for different functions. The 6”, 8” and 10” panels have a project area of **10 MB**, while the 12” and 15” panels have a **40 MB** project area.

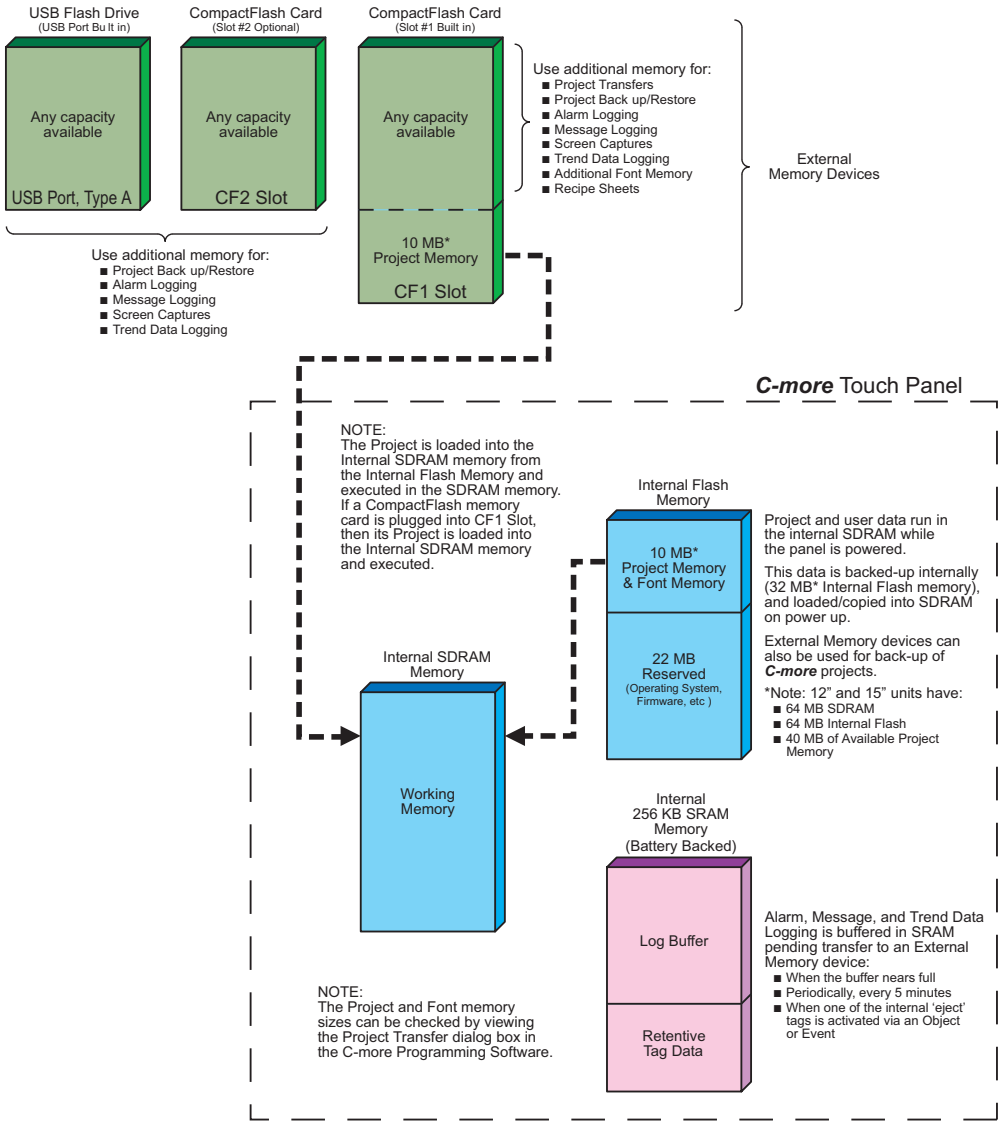

Handling External Memory Devices

Consider the following to prevent data error risk when utilizing data logging.

- Do not turn off power to the *C-more* touch panel at any time the external memory device is being accessed.
- Do not remove any external memory device when the device is being accessed by the touch panel.

Note: *A system tag, such as* ***SYS %device% WriteStatus*** *can be used to detect when the external memory device is being accessed. See the* ***C-more*** *programming software on-line help for additional information on* ***System Tag Names****.*

- If a CompactFlash memory card is plugged into the CF1 slot while the panel is running, the project will continue to run from the project that is currently in the internal SDRAM. If power is cycled and there is a good project stored on the CompactFlash, then that project will be loaded into the internal SDRAM and ran.
- Be sure to backup the memory device at regular intervals.
- A CompactFlash memory card plugged into the CF1 slot that includes a project that is being run cannot be used for backup.
- If you suspect the memory device is bad, you may want to use a PC to re-format the device, or use a known good memory device.

Note: *The* ***C-more*** *touch panel requires that all external memory devices be formatted with a* ***FAT*** *or* ***FAT32*** *file system. The* ***FAT*** *file system is recommended for better performance.*

- The number of times the memory device can be written to is limited, approximately 300,000 times. Consequently, frequent writing at short intervals may shorten the service life of the memory device. Try to use as long as possible sampling times for logging data to reduce the amount of times the memory device is accessed.

Power Loss Detection and Power Retention Period

It is important to have an understanding of how the touch panel handles power loss as it applies to data logging and retentive name tag data. The C-more touch panel system CPU will receive a power loss interrupt signal when the incoming DC voltage level drops below 19.2 VDC. If using the optional AC/DC Power Adapter, EA-AC, then an interrupt signal will occur when the incoming AC voltage level drops below 58 VAC (+/- 5%). When power loss is detected, the backlight will turn off immediately to allow extending the power retention period. Any logging to either CompactFlash memory or an USB pen drive will also stop. This will allow time to complete writing any data to the internal 256 KB SRAM. The 256 KB SRAM along with CPU Date/Time registers are battery backed.

Because the 24 VDC power retention time period is very short, only data backup to the internal 256 KB SRAM memory buffer can occur. When power is restored, the contents of the SRAM will be written to the selected memory storage device.

Data Logging Function and Logging Media

Considering the power retention period and the CF card write performance, the EA-CF-CARD memory card is recommended to minimize data loss. It is also recommended to further reduce the risk of losing data, a uninterruptible power supply (UPS) should be used to provide power to the touch panel.

Data Logging - Memory Device Full

The following explains what occurs when logging data from an object, such as Line Trending, and the memory device becomes full. The memory device can be a USB pen drive plugged into the USB port, or a CompactFlash memory card plugged into location CF1 or CF2.

The answer is when the memory device that is being used for logging is full, the panel will stop writing to the log and a RTE-001 Runtime Error will be displayed on the screen. The displayed error message will read "Log Failed. Not enough Memory Space in %Device%". (%Device% can be USB, CF1, or CF2.) The data logging object will continue to execute.

The user can monitor the System Tag "SYS %DEVICE% FreeMemory" with the Event Manager, and display a message to the operator to warn when the memory device is close to full.

The user can also use a Pushbutton object with the tag "SYS Copy Log to %Device%" to copy ALL logs on ALL other devices to %Device% and therefore save the current data.

For example, if the application is logging to CF1 and CF2, the user can monitor "SYS CF1 FreeMemory" and "SYS CF2 FreeMemory" in the Event Manager. When the value of either gets below a set value in the Event Manager, then the Event Manger can issue an Alarm, send an email, etc. The operator can then insert a USB pen drive into the panel's USB port, and press a pushbutton that is configured with System Tag "SYS Copy Log to USB". This action will copy all of the logged data to the USB pen drive from both CF1 and CF2. The operator can then use the System Setup Screen's Memory selection to clear both CompactFlash CF1 and CF2.

This example can work with different combinations of the memory devices, but the preferred method is using a USB pen drive because it is the easiest device to insert and remove.

Chemical Compatibility

The C-more touch panels comprise three different materials that may be exposed to outside elements: a gasket, a screen sheet and a bezel.

The C-more panel serial number can be found on the label on the back of the panel. It has the format MODEL NUMBER + yymddBsss. The characters yym represent the year and month of manufacture. These are the characters that determine the materials used in construction of your panel as follows:

All panel gaskets are Silicone

Panel Size	Date Code	Screen Sheet Material	Bezel Frame Material
6 inch	05m through 077	PET	ABS
	078 through current	PC	
8 inch	05m through 077	PET	
	078 through 082	PC	
	083 through current		PPE/PS
10 inch	05m through 077	PET	ABS
	078 through 081	PC	
	082 through current		PPE/PS
12 and 15 inch	05m through 077	PET	ABS
	078 through 081	PC	
	082 through 097		PPE/PS
	098 through current	PET	

Chemical compatibility tables begin on the next page.

Chemical Compatibility (cont'd)

The following tables are provided to make you aware of the general compatibility between chemicals that may be present in your work environment and the various materials used in the manufacture of the panel. Use the table to determine those chemicals that are safe to use around your *C-more* touch panel and those that may harm it. The tables are made up of specifications provided by the manufacturer of the listed material. The tables rate these chemicals as either Excellent, Good, Not Recommended, or Not Usable. Because the ratings are for ideal conditions at room temperature, consider all factors when evaluating your application. Areas left blank have not been tested by the manufacturer and therefore information of compatibility is not available.

The values in [**brackets**] represent the chemical's density at room temperature, 20 °C.

Chemicals	Screen Sheet – PET [Density %, Temperature °C]	Screen Sheet – PC [Density %, Temperature °C]	6" Bezel – ABS [Density %, Temperature °C]	8"-15" Bezel – PPE / PS [Density %, Temperature °C]	Gasket – Silicone [Density %, Temperature °C]
Acetaldehyde			Not Recommended	Not Usable	
Acetic Acid			[10, 20 °C] Excellent		
			[10, 20 °C] Excellent		
	[Glacial] Excellent		[50, 20 °C] Not Usable		
			[50-70, 20 °C] Not Usable		
			[100, 20 °C] Not Usable		
Acetic anhydride			Not Recommended		
Acetone	Excellent	Not Usable	Not Usable	Not Usable	
Acetophenone			Not Usable	Not Usable	
Acetylene			Excellent		
Acrylonitrile			Not Recommended	Not Usable	
Alcohol - Butyl Ether					Excellent
Alcohol - Ethanol					Excellent
Alcohol - Isopropyl					Excellent
Alums NH3, Cr, K			Excellent		
Aluminum acetate			Excellent		
Aluminum bromide			Good		
Aluminum chloride			Good		
Aluminum nitrate			Excellent		
Aluminum sulfate			Excellent		
Ammonia [anhydrous] (10%)			Good	Good	Good
Ammonia gas [cold]			Good		
Ammonia liquid			Good		

Table continued at top of next page.

Chemical Compatibility (cont'd)

Chemicals	Screen Sheet – PET [Density %, Temperature °C]	Screen Sheet – PC [Density %, Temperature °C]	6" Bezel – ABS [Density %, Temperature °C]	8"-15" Bezel – ABS [Density %, Temperature °C]	Gasket – Silicone [Density %, Temperature °C]
Ammonia water	[12%] Not Usable		[12%] Not Usable		
	[28%] Not Usable		[28%] Not Usable		
Ammonium carbonate			Excellent		
Ammonium chloride			Excellent		
Ammonium hydroxide [ammonia water]			Excellent		
Ammonium nitrate			Excellent		
Ammonium nitrite			Excellent		
Ammonium persulfate			Excellent		
Ammonium phosphate			Excellent		
Ammonium sulfate			Excellent		
Amyl acetate			Not Usable		
Amyl alcohol			Good		
Aniline dyes			Not Recommended		
Animal oil [lard]			Good		
Aqua regia			Not Usable		
Arsenic acid			Not Recommended		
Asphalt			Excellent		
Barium chloride			Excellent		
Barium hydroxide			Excellent		
Barium sulfate			Excellent		
Barium sulfide			Excellent		
Beer			Excellent	Good	
Beet sugar liquors			Excellent		
Benzaldehyde			Not Recommended	Not Usable	
Benzene [Benzol]			Not Recommended	Not Usable	
Benzene	Excellent			Not Usable	Not Usable
Benzine			Not Usable	Not Usable	
Benzyl alcohol			Not Recommended	Not Usable	
Benzyl benzoate			Not Usable	Not Usable	
Benzyl chloride			Not Usable	Not Usable	
Borax			Excellent		
Boric acid			Good		
Bromine			Not Usable		
Butane			Excellent		

Table continued at top of next page.

Chemical Compatibility (cont'd)

Chemicals	Screen Sheet – PET [Density %, Temperature °C]	Screen Sheet – PC [Density %, Temperature °C]	6" Bezel – ABS [Density %, Temperature °C]	8"-15" Bezel – ABS [Density %, Temperature °C]	Gasket – Silicone [Density %, Temperature °C]
Butter			Good		
Butyl acetate			Not Usable	Not Usable	
Butyl acrylate			Not Usable	Not Usable	
Butyl alcohol [Butanol]			Good	Good	
Butyl Cellosolve		Not Usable			
Calcium actetate			Excellent		
Calcium bisulfite			Good		
Calcium chloride			Excellent		
Calcium hydroxide			Excellent		
Calcium hypochlorite			[20,RT] Excellent		
Calcium nitrate			Excellent		
Calcium sulfide			Excellent		
Cane sugar liquors			Excellent	Good	
Carbon dioxide			Excellent		
Carbon disulfide			Not Usable		
Carbonic acid			Good		
Carbon tetrachloride	Excellent		Not Usable	Not Usable	
Castor oil			Not Recommended	Not Usable	
China wood [tung] oil			Excellent	Not Usable	
Chlorine gas [dry]			Not Usable		
Chlorine gas [wet]			Not Usable		
Chlorine liquid			Not Usable		
Chlorinated solvents			Not Usable	Not Usable	
Chloroacetic acid			Not Usable	Not Usable	
Chloroacetone			Not Usable	Not Usable	
Chloroform	Excellent		Not Usable	Not Usable	
Chlorophenol	Not Usable			Not Usable	
Chlorosulfonic acid			Not Usable	Not Usable	
Chlorotoluene			Not Usable	Not Usable	
Chromic acid			[2, 70 °C] Not Usable	[2, 70 °C] Not Usable	
			[5, 70 °C] Not Usable	[5, 70 °C] Not Usable	
			[10, 70 °C] Not Usable	[10, 70 °C] Not Usable	
			[25, 70 °C] Not Usable	[25, 70 °C] Not Usable	
Citric acid			Good		

Table continued at top of next page.

Chemical Compatibility (cont'd)

Chemicals	Screen Sheet – PET [Density %, Temperature °C]	Screen Sheet – PC [Density %, Temperature °C]	6" Bezel – ABS [Density %, Temperature °C]	8"-15" Bezel – ABS [Density %, Temperature °C]	Gasket – Silicone [Density %, Temperature °C]
Cocoanut oil			Good	Not Usable	
Copper chloride			Excellent		
Copper cyanide			Excellent		
Copper sulfate			Excellent		
Corn oil			Good	Not Usable	
Cottonseed oil			Good	Not Usable	
Creosol			Not Usable	Not Usable	
Cyclohexane			Good	Not Usable	
Cyclohexanol			Good	Not Usable	
Cyclohexanone		Not Usable	Not Usable	Not Usable	
Developing solutions [Hypos]			Excellent		
Dibutyl phthalate [DBP]			Not Usable	Not Usable	
Dichlorobenzene			Not Usable	Not Usable	
Diethylene glycol			Good	Not Usable	
Diethyl ether			Not Usable	Not Usable	
Disopropyl ketone			Not Usable	Not Usable	
Dimethyl aniline			Not Usable	Not Usable	
Dimethyl formamide			Not Usable	Not Usable	
Dioxane			Not Usable	Not Usable	
Dipentene			Not Usable	Not Usable	
Epichlorohydrine			Not Usable	Not Usable	
Ethyl acetate	Excellent		Not Usable	Not Usable	
Ethyl acetoacetate			Not Usable	Not Usable	
Ethyl acrylate			Not Usable	Not Usable	
Ethyl alcohol			Not Recommended	Good	
Ethyl benzene			Not Usable	Not Usable	
Ethyl chloride			Not Usable	Not Usable	
Ethylene chlorohydrin			Not Usable	Not Usable	
Ethylene diamine			Not Usable	Not Usable	
Ethylene dichloride			Not Usable	Not Usable	
Ethylene glycol			Excellent	Good	
Ethylene oxide			Not Usable	Not Usable	
Fatty acid			Good	Not Usable	
Ferric chloride			Excellent		

Table continued at top of next page.

Chemical Compatibility (cont'd)

Chemicals	Screen Sheet – PET [Density %, Temperature °C]	Screen Sheet – PC [Density %, Temperature °C]	6" Bezel – ABS [Density %, Temperature °C]	8"-15" Bezel – ABS [Density %, Temperature °C]	Gasket – Silicone [Density %, Temperature °C]
Ferric nitrate			Excellent		
Ferric sulfate			Excellent		
Fluorboric acid			Not Recommended		
Fluorobenzene			Not Usable	Not Usable	
Fluosilicic acid			Not Recommended		
Formaldehyde			[40, 20 °C] Good	[40, 20 °C] Not Usable	
Formic acid			[25, 20 °C] Excellent		
			[50, 20 °C] Good		
			[90, 20 °C] Not Recommended		
Freon	[45°C] Excellent				
Freon 11			Not Recommended		
Freon 12			Good		
Freon 113			Not Usable		
Freon 114			Not Recommended		
Fuel oil			Good		
Gasoline (Leaded)		Good	Not Recommended	Not Usable	Not Usable
Gasoline (Unleaded)		Good	Not Recommended	Not Usable	Not Usable
Gelatin			Excellent		
Glauber's salt			Excellent		
Glucose			Excellent		
Glue			Excellent		
Glycerin			Excellent	Good	
Grease			Excellent	Good	
Hexane			Not Recommended	Not Usable	
Hexyl alcohol			Good	Not Usable	
Hydrobromic acid			[20, 20 °C] Not Usable		
			[20-70, 20 °C] Not Usable		
			[37, 20 °C] Not Usable		
Hydrochloric acid	[18%] Excellent		[10, 20 °C] Excellent	[10, 20 °C] Good	Good
			[20, 20 °C] Good		
	[35%] Good	[35%] Good	[20-80, 20 °C] Not Recommended		
			[38,20 °C] Not Recommended		

Table continued at top of next page.

Chemical Compatibility (cont'd)

Chemicals	Screen Sheet – PET [Density %, Temperature °C]	Screen Sheet – PC [Density %, Temperature °C]	6" Bezel – ABS [Density %, Temperature °C]	8"-15" Bezel – ABS [Density %, Temperature °C]	Gasket – Silicone [Density %, Temperature °C]
Hydrocyanic acid			Excellent		
Hydrofluoric acid			[10, 20 °C] Excellent		
			[20, 20 °C] Excellent		
			[40, 20 °C] Good		
Hydrofluoric acid anhydrous			Not Usable		
Hydrogen			Excellent		
Hydrogen peroxide			[5, 20 °C] Not Recommended		
			[5-50, 20 °C] Not Recommended		
			[30, 20 °C] Not Usable		
Hydrogen sulfide			Excellent		
Hydorquinone			Not Recommended		
Hypochlorous acid			Not Recommended		
Isobutyl alcohol		Good	Good	Good	
Isopropyl acetate			Not Usable	Not Usable	
Isopropyl alcohol			Good	Good	
JP fuels (1-6)			Good	Not Usable	
Kerosene			Good	Not Usable	
Lacquer			Not Usable		
Lactic acid			Excellent		
Lard			Excellent		
Lead acetate			Excellent		
Lead nitrate			Good		
Lead sulfamate			Good		
Linoleic acid			Excellent		
Linseed oil			Excellent	Not Usable	
Liquified petroleum gas [LPG]			Excellent		
Lubricating oil			Excellent		
Lye solution			Excellent		
Magnesium chloride			Excellent		
Magnesium hydroxide			Excellent		
Magnesium sulfate			Excellent		
Maleic acid			Excellent		

Table continued at top of next page.

Chemical Compatibility (cont'd)

Chemicals	Screen Sheet – PET [Density %, Temperature °C]	Screen Sheet – PC [Density %, Temperature °C]	6" Bezel – ABS [Density %, Temperature °C]	8"-15" Bezel – ABS [Density %, Temperature °C]	Gasket – Silicone [Density %, Temperature °C]
Marcuric chloride			Excellent		
MEK		Not Usable	Not Usable	Not Usable	
Mercury			Excellent		
Metacresol	Not Usable				
Methylene Chloride		Not Usable			
Methyl acetate			Not Usable	Not Usable	
Methyl alcohol	Excellent		Not Recommended	Not Usable	
Methyl Benzoate	Not Usable				
Methyl chloride			Not Usable	Not Usable	
Methyl ethyl ketone [MEK]		Not Usable	Not Usable	Not Usable	
Methyl isobutyl ketone [MIBK]			Not Usable	Not Usable	
Methyl methacrylate			Not Usable	Not Usable	
Methyl dichloride			Not Usable	Not Usable	
Methyl Salicylate	Not Usable				
Milk			Excellent		
Mineral oil			Excellent		Excellent
Monochlorobenzene	Not Usable		Not Usable	Not Usable	
Naptha			Good		
Napthalene			Excellent		
Napthenic acid			Good		
Natural gas			Excellent		
Natural oil					Excellent
Nickel acetate			Excellent		
Nickel chloride			Excellent		
Nickel sulfate			Excellent		
Nitric acid	[35%] Good		[10, 20 °C] Good	[10, 20 °C] Not Usable	
			[10-70, 20 °C] Not Usable	[10-70, 20 °C] Not Usable	
			[30, 20 °C] Not Usable	[30, 20 °C] Not Usable	
	[60%] Not Usable		[30-70, 20 °C] Not Usable	[30-70, 20 °C] Not Usable	
			[61.3, 20 °C] Not Usable	[61.3, 20 °C] Not Usable	
			[Vapor, 20 °C] Not Usable	[Vapor, 20 °C] Not Usable	

Table continued at top of next page.

Chemical Compatibility (cont'd)

Chemicals	Screen Sheet – PET [Density %, Temperature °C]		6" Bezel – ABS [Density %, Temperature °C]	8"-15" Bezel – ABS [Density %, Temperature °C]	Gasket – Silicone [Density %, Temperature °C]
Nitrobenzene	Not Usable		Not Usable	Not Usable	
Nitroethane			Not Usable	Not Usable	
Nitromethane			Not Usable	Not Usable	
Nitropropane			Not Usable	Not Usable	
Nitrogen			Excellent	Good	
Octyl alcohol			Good		
Oleic acid			Excellent	Not Usable	
Olive oil			Excellent	Not Usable	
Oxalic acid			Excellent		
Oxygen			Excellent		
Ozone			Not Recommended		
Palmitic acid			Excellent		
Perchloroethylene			Not Usable	Not Usable	
Petroleum			Excellent	Not Usable	
Phenol	Not Usable		Not Usable	Not Usable	
Phospheric acid			[50, 20 °C] Good		
			[50-70, 20 °C] Not Usable		
			[75, 20 °C] Not Usable		
Pickling solution			[Sulfuric acid 20% + nitric acid 4%] Good		
			[Sulfuric acid 40% + nitric acid 15%] Not Recommended		
Pine oil			Good		
Potassium chloride			Excellent		
Potassium cyanide			Excellent		
Potassium dichromate			[10, 20 °C] Excellent		
Potassium hydroxide	[10%] Not Usable		Excellent		
Potassium nitrate			Excellent		
Potassium permangante			[5, 20 °C] Excellent		
Potassium sulfate			Excellent		
Propane			Excellent		
Propyl acetate			Not Usable	Not Usable	
Propyl alcohol			Good	Good	
Salt water			Excellent	Good	

Table continued at top of next page.

Chemical Compatibility (cont'd)

Chemicals	Screen Sheet – PET [Density %, Temperature °C]	Screen Sheet – PC [Density %, Temperature °C]	6" Bezel – ABS [Density %, Temperature °C]	8"-15" Bezel – ABS [Density %, Temperature °C]	Gasket – Silicone [Density %, Temperature °C]
Silicone oils			Good	Good	
Silver nitrate			Excellent		
Skydrol 500			Not Usable		
Skydrol 7000			Not Usable		Not Usable
Soap solutions			Excellent		
Soda ash			Excellent		
Sodium bicarbonate			Excellent		
Sodium bisulfate			Good		
Sodium borate			Excellent		
Sodium carbonate	[10%] Excellent				
Sodium chloride			Excellent	Good	
Sodium cyanide			Excellent		
Sodium hydroxide	[40%] Not Usable	[40%] Not Usable	[10, 20 °C] Excellent		Good
			[30, 20 °C] Excellent		
			[30-70, 20 °C] Not Usable		
Sodium hypochlorite			[5, 20 °C] Excellent		
			[5-70, 20 °C] Not Usable		
Sodium metaphosphate			Excellent		
Sodium nitrate			Excellent		
Sodium perborate			Excellent		
Sodium peroxide			Not Usable		
Sodium phosphate			Excellent		
Sodium thiosulfate			Excellent		
Sodium sulfate [Glauber's salt]			Good		
Sodium sulfite			Excellent		
Soybean oil			Excellent		
Stannic chloride			Good		
Steam			[below 150 degrees] Not Usable		
			[above 150 degrees] Not Usable		
Stearic acid			Excellent		
Styrene			Not Recommended	Not Usable	
Sucrose solutions			Excellent	Good	

Table continued at top of next page.

Chemical Compatibility (cont'd)

Chemicals	Screen Sheet – PET [Density %, Temperature °C]	Screen Sheet – PC [Density %, Temperature °C]	6" Bezel – ABS [Density %, Temperature °C]	8"-15" Bezel – ABS [Density %, Temperature °C]	Gasket – Silicone [Density %, Temperature °C]
Sulfur			Excellent		
Sulfur dioxide			Good		
Sulfuric acid	[40%] Excellent		[10, 20 °C] Excellent	[10, 20 °C] Good	Not Usable
			[10-70, 20 °C] Not Usable		
	[60%] Excellent		[30, 20 °C] Excellent		
			[30-70, 20 °C] Not Recommended		
	[70%] Excellent		[98, 20 °C] Not Usable		
			[Vapor, 20 °C] Not Usable		
	[80%] Not Usable				
Sulpherous acid			[10, 20 °C] Good		
Tannic acid			Good		
Tar			Not Recommended		
Tartaric acid			Excellent		
Terpineol			Not Recommended		
Tetrachloroethane	Excellent		Not Usable		
Tetraethyl lead			Good	Not Usable	
Tetralin	Not Usable				
Tetrahydrofuran			Not Usable	Not Usable	Not Usable
Thionyl chloride			Not Usable	Not Usable	
Toluene		Not Usable	Not Usable	Not Usable	Not Usable
Trichloroethylene [Trichlene]			Not Usable	Not Usable	
Triethanol amine			Good	Not Usable	
Turpentine oil			Good	Not Usable	
Vegetable oil			Good	Not Usable	
Vinegar			Excellent	Good	
Water			Excellent	Good	
Whiskey			Excellent		
Xylene	Excellent	Not Usable	Not Usable	Not Usable	
Zeolites			Excellent		
Zinc acetate			Excellent		
Zinc chloride			Excellent		
Zinc sulfate			Excellent		

Accessories

Chapter 3

In This Chapter...

Accessories 3–2
Accessories Overview 3–3
Accessories at a Glance 3–4
AC/DC Power Adapter – EA-AC 3–5
Expansion Assembly – EA-EXP-OPT 3–9
CF Card Interface Module – EA-CF-IF 3–12
CompactFlash Memory – EA-CF-CARD 3–14
6″ Adapter Plate – EA-6-ADPTR 3–17
D-SUB 15-pin 90 degree Comm Port Adapter – EA-ADPTR-4 3–19
D-SUB 15-pin to Terminal Block Adapter – EA-COMCON-3 3–20
Non-glare Screen Covers – EA-xx-COV2, xx = 6, 8, 10, 12 or 15 3–22
USB Pen Drive – SDCZ4-2048-A10 3–24

Accessories

Part Number	Description	Part Number	Description
EA-AC	The AC/DC Power Adapter, EA-AC, is for ***C-more*** touch panels only, and is powered from a 100-240 VAC, 50/60 Hertz power source. The adapter provides 24 VDC @ 1.5 A. Power Fault features help protect data being logged to CompactFlash during power failures. The ***C-more*** panel must have firmware version 1.21 Build 6.18E or higher for proper operation.	**EA-6-COV2**	Non Glare 6 Inch Screen Cover, protective overlay used to protect the touch screen while helping to reduce the glare from external light sources. (pk of 3)
EA-EXP-OPT	Expansion Assembly, is used to allow installation of the optional CF Card Interface Module for CF card use and also provides a slot for future option modules.	**EA-8-COV2**	Non Glare 8 Inch Screen Cover, protective overlay used to protect the touch screen while helping to reduce the glare from external light sources. (pk of 3)
EA-CF-IF	CF Card Interface Module, is used with the Expansion Assembly to allow use of CF cards, such as the CompactFlash Memory, p/n EA-CF-CARD.	**EA-10-COV2**	Non Glare 10-Inch Screen Cover, protective overlay used to protect the touch screen while helping to reduce the glare from external light sources. (pk of 3)
EA-CF-CARD	CompactFlash Memory Card Option, industrial grade, high speed memory for non-volatile storage.	**EA-12-COV2**	Non Glare 12-Inch Screen Cover, protective overlay used to protect the touch screen while helping to reduce the glare from external light sources. (pk of 3)
EA-6-ADPTR	6 Inch Adapter Plate, allows C-more 6" touch panels to be mounted into EZTouch 6" non-slim bezel cutouts without having to make alterations. NEMA 4/4X.	**EA-15-COV2**	Non Glare 15-Inch Screen Cover, protective overlay used to protect the touch screen while helping to reduce the glare from external light sources. (pk of 3)
EA-ADPTR-4	D-SUB 15-pin 90 degree PLC serial communication port adapter to allow a PLC communication cable to be plugged in at a 90 degree angle to reduce panel depth requirements.	**SDCZ4-2048-A10**	USB Pen Drive, 2GB, SanDisk Cruzer micro Pen Drive. Compatible with Windows 98SE, ME, 2000, XP and Mac OS 9.1.x+, OS X 10.1.2+ Certified Windows XP and Mac OS X. Recommended for use with the ***C-more*** Operator Touch Panels.
EA-COMCON-3	D-SUB 15-pin to 6-terminal PLC serial communication port adapter to allow wire terminal connections for RS-422/485 PLC communication cable.		

WARNING: Do NOT use EZTouch RAM or Flash memory cards with the *C-more* touch panels.

Accessories Overview

***NOTE**: CompactFlash memory card designations – CF Slot #1 is at the top of the panel and CF Slot #2 is the CF Card Interface Module, EA-CF-IF.*

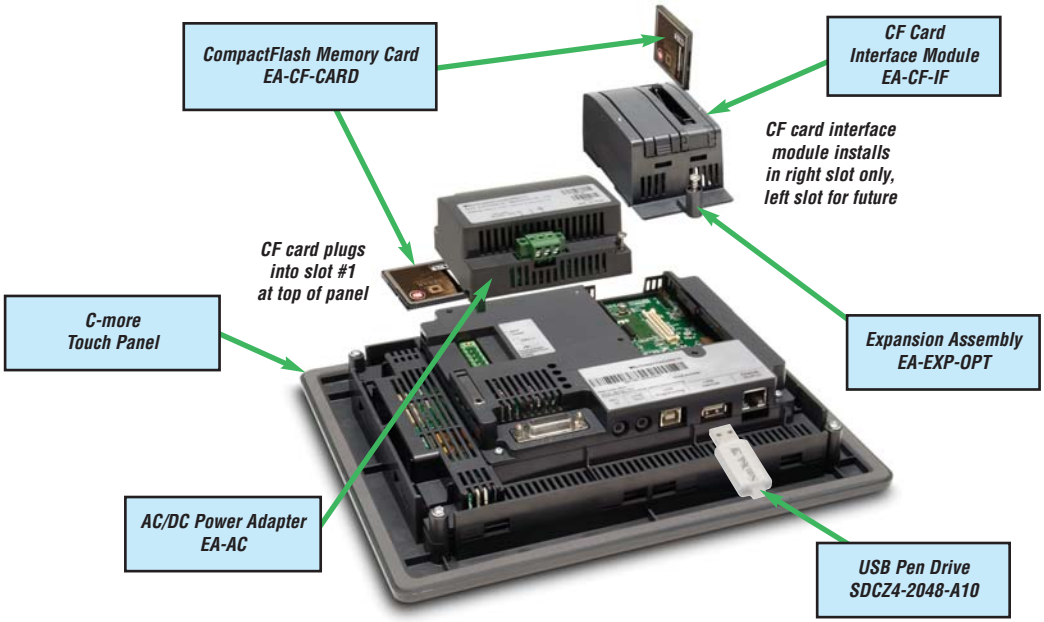

***NOTE**: Refer to the individual product data sheets that are included with the accessories for additional information.*

Accessories at a glance:

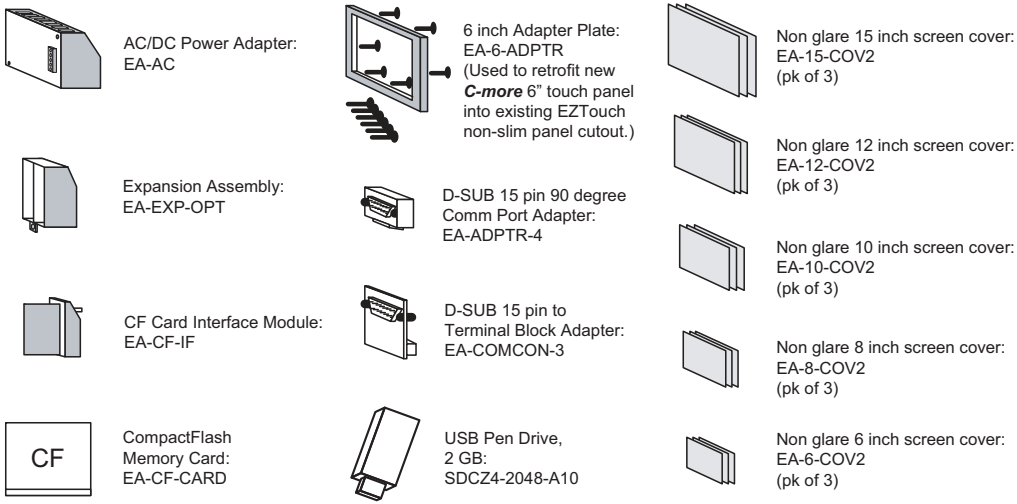

WARNING

To minimize the risk of potential safety problems, you should follow all applicable local and national codes that regulate the installation and operation of your equipment. These codes vary from area to area and it is your responsibility to determine which codes should be followed, and to verify that the equipment, installation, and operation are in compliance with the latest revision of these codes.

Equipment damage or serious injury to personnel can result from the failure to follow all applicable codes and standards. We do not guarantee the products described in this publication are suitable for your particular application, nor do we assume any responsibility for your product design, installation, or operation.

If you have any questions concerning the installation or operation of this equipment, or if you need additional information, please call us at 770-844-4200.

This publication is based on information that was available at the time it was printed. At ***Automationdirect.com***® we constantly strive to improve our products and services, so we reserve the right to make changes to the products and/or publications at any time without notice and without obligation. This publication may also discuss features that may not be available in certain revisions of the product.

AC/DC Power Adapter

The optional ***C-more*** AC/DC Power Adapter can be used to power the ***C-more*** touch panels from a 100-240 VAC, 50/60 Hertz, voltage source. The adapter provides 24 VDC @ 1.5 A to the touch panel's DC power connector and can be conveniently secured to the touch panel with two captive screws. The adapter provides a power loss signal to the touch panel that can be used to track power outages. This signal also allows the touch panel by way of a timed sequence to stop writing data to CompactFlash memory devices providing a controlled shutdown for increased data logging reliability.

WARNING: The AC/DC Power Adapter is not recommended for use with the EA7-T15C touch panel when operating temperatures are expected to exceed 40 °C [104 °F].

NOTE: *1.)The AC/DC Power Adapter, EA-AC, is for* ***C-more*** *touch panels only, and is powered from a 100-240 VAC, 50/60 Hertz power source. The adapter provides 24 VDC @ 1.5 A.*
2.) Power Fault features help protect data being logged to CompactFlash during power failures. The ***C-more*** *panel must have firmware version 1.21 Build 6.18E or higher for proper operation.*

Part No. EA-AC

AC/DC Power Adapter Wiring

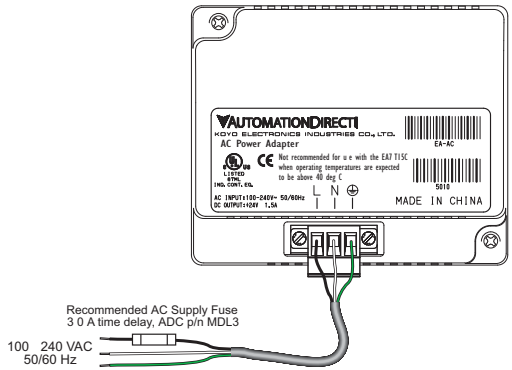

Tightening Torque	
Power supply cable torque	71 - 85 oz-in (0.5 - 0.6 Nm)
Power connector mounting torque	71 - 85 oz-in (0.5 - 0.6 Nm)
Mounting flange screw torque	57 - 71 oz-in (0.4 - 0.5 Nm)

NOTE: Use 60 / 75 °C copper conductors only.

AC/DC Power Adapter Specifications

AC/DC Power Adapter Specifications	
Part Number	**EA-AC**
Input Voltage & frequency	100-240 VAC; 50/60 Hertz
Voltage Range	85-264 VAC w/ Under Voltage and Over Voltage Shutdown
Permissible Momentary Power Failure	Within 40 ms, see explanation in the Note below.
Input Power	68 VA or less
Operating Temperature Range	0 °C to 50 °C [32 to 122 °F] (For the EA7-T15C touch panel, maximum temperature is 40° C, [104 °F] when using the AC/DC Power Adapter.)
Storage Temperature Range	-20 to 60 °C [-4 to 140 °F]
Operating & Storage Humidity	10-85% RH (non-condensing)
Noise Immunity	1000 VAC p-p (Pulse width 1 µs, rise time: 1 ns) With proper ground connection on AC terminal block.
Hi-pot	1000 VAC, 1 minute With proper ground connection on AC terminal block.
Insulation Resistance	500 VDC, 10 M ohm or above With proper ground connection on AC terminal block.
Vibration	Compliant with IEC61131-2
Shock	Pulse shape: Sine half wave, Peak acceleration: 147 m/s2 (15 G), X, Y, Z: 3 directions, 2 times each
Thermal Protection	140 °C [284 °F], with autorecovery
Short Circuit Protection	85 VAC: 2.6 A, 100 VAC: 2.8 A, 264 VAC: 3.9 A
Static Electricity Discharge Resistance	Compliant with IEC61000-4-2, Contact: 4 kV, Air: 8 kV
Agency Approvals	UL508, cUL, CE, EMC EN61132-2
Environment	No corrosive gas or conductive dust
Grounding	Ground resistance: less than 100 ohm
Diemnsions - inches [mm]	3.00” (H) x 3.66” (W) x 1.42” (D) [76.2 mm x 93.0 mm x 36.1 mm] (Excluding DC Power Connector.)
Weight	6.13 oz. [175 g]
Cooling Method	Natural convection when installed on vertically mounted touch panel.
Included Parts	AC Power Connector, Data Sheet Insert
Removable AC Power Connector	EA-AC-CON or DECA Switchlab MC101-508-03G Secure with (2) captive M2.5 screws, torque to 70 oz-in [0.5 Nm]
Output Voltage and Ripple	21.6 - 26.4 VDC, Ripple < 100 mV p-p
Output Current	Maximum 1.5 A
Inrush Current	For 100 VAC: 15 A, 3 ms or less For 240 VAC: 20 A, 3 ms or less
Power Fail Detection Voltage	58 VAC ±5%
Recommended AC Supply Fuse	3.0 A time delay, ADC p/n MDL3
Power Supply Cable Torque	71 - 85 oz-in (0.5 - 0.6 Nm)
Mounting to Touch Panel	Secure with (2) spring loaded captive M3-20 screws, torque to 50 oz-in [0.35 Nm]

***NOTE**: Permissible momentary power failure: The **C-more** touch panel will turn off the LCD backlight instantly when the power failure is detected (less than 58 VAC +/- 5%) for extending the Power Retention Period that enables the CPU to run longer. The backlight turns on automatically when the power returns to the **C-more** operating voltage.*

AC/DC Power Adapter Dimensions

Dimensions

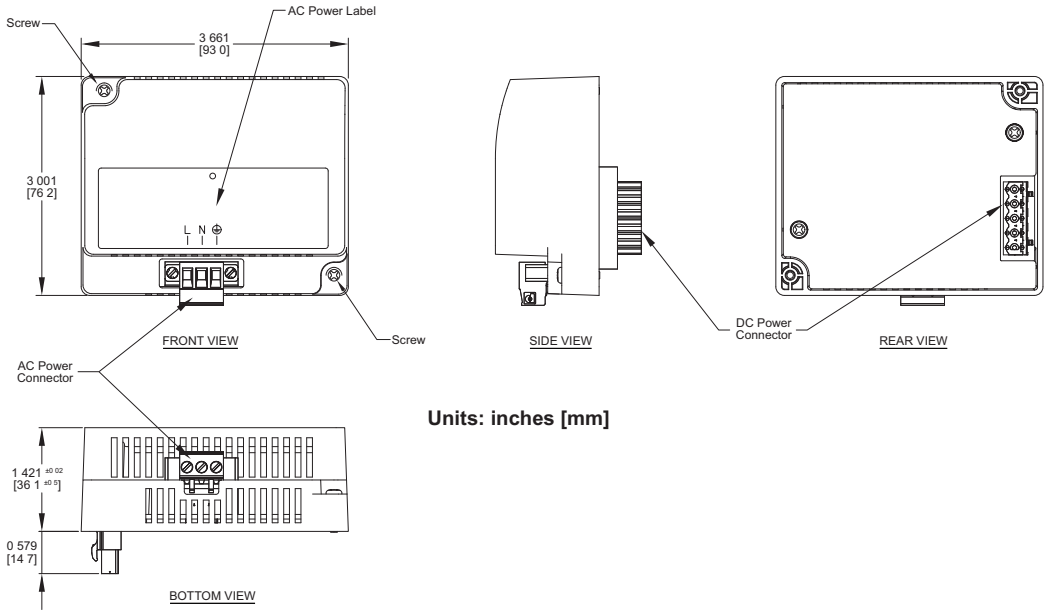

Units: inches [mm]

Panel Depth with AC/DC Power Adapter Installed

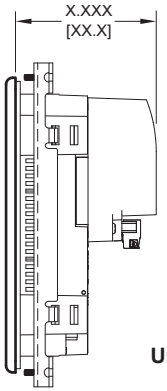

EA7-S6M-R = 2.921 [74.2]
EA7-T6CL-R = 2.921 [74.2]
EA7-S6C-R = 2.921 [74.2]
EA7-S6M = 2.921 [74.2]
EA7-S6C = 2.921 [74.2]
EA7-T6C = 2.921 [74.2]
EA7-T6CL = 2.921 [74.2]
EA7-T8C = 3.157 [80.2]
EA7-T10C = 3.106 [78.9]
EA7-T12C = 3.102 [78.8]
EA7-T15C = 3.075 [78.1]

Units: inches[mm]

AC/DC Power Adapter Installation

WARNING: This procedure should only be performed by qualified personnel who are experienced in working with electronic equipment. Take the necessary steps to prevent damage that may be caused by static electricity discharge. Disconnect input power to the touch panel before proceeding.

Preparation: Place the touch panel face down on a lint-free soft surface to prevent scratching the display screen if not already installed in a control cabinet. Remove the DC power connector if it is installed.

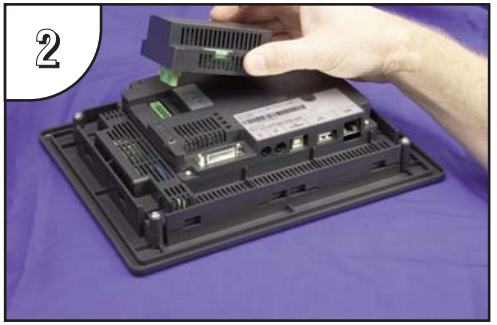

Insert the AC/DC Power Adapter into the touch panel's 5-position DC power connector.

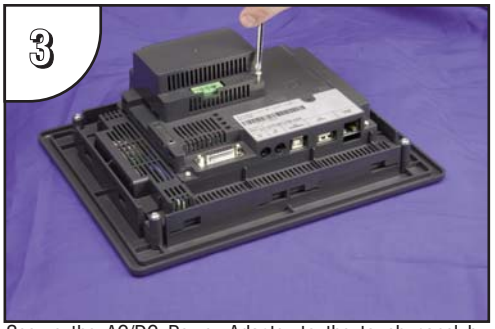

Secure the AC/DC Power Adapter to the touch panel by tightening the two (2) spring loaded captive M3-20 screws to a torque of 50 oz-in [0.35 Nm].

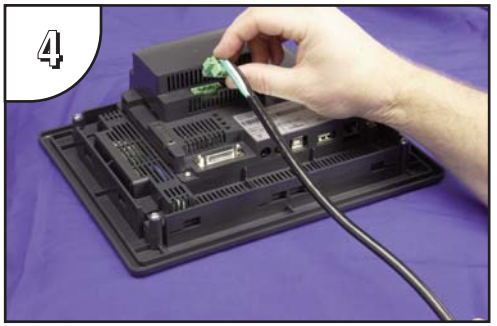

Plug the wired 3-pin AC Power Connector into its mating connector on the adapter and secure in place by tightening the two (2) captive M2.5 screws to a torque of 70 oz-in [0.5 Nm]. (Wiring details shown on page 3-5.)

Expansion Assembly

The *C-more* Expansion Assembly is used to allow installation of the optional CF Card Interface Module for CF card use and also provides a slot for future option modules.

Part No. EA-EXP-OPT

Expansion Assembly Dimensions

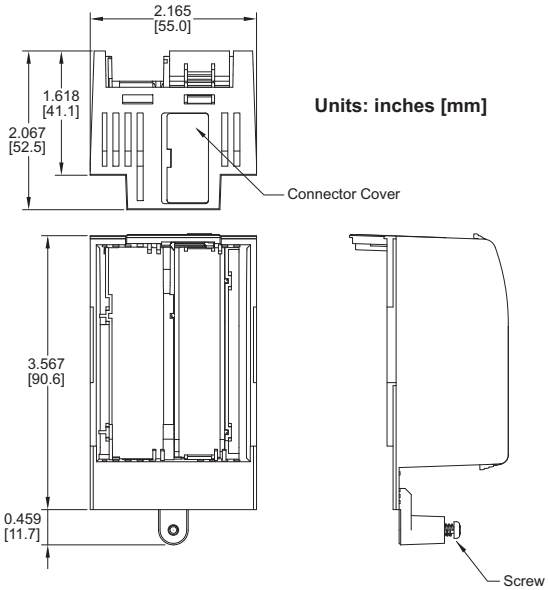

Panel Depth with Expansion Assembly Installed

EA7-S6M = 2.921 [74.2]
EA7-S6C = 2.921 [74.2]
EA7-T6C = 2.921 [74.2]
EA7-T6CL = 2.921 [74.2]
EA7-T8C = 3.157 [80.2]
EA7-T10C = 3.106 [78.9]
EA7-T12C = 3.102 [78.8]
EA7-T15C = 3.075 [78.1]

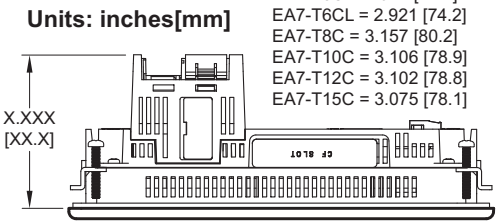

Expansion Assembly Details

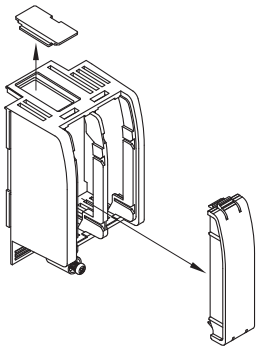

Expansion Assembly Installation

WARNING: This procedure should only be performed by qualified personnel who are experienced in working with electronic equipment. Disconnect input power to the touch panel before proceeding.

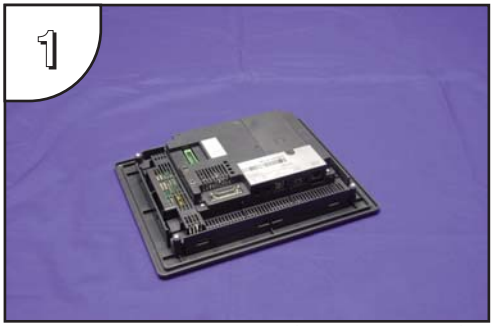

Preparation: Place the touch panel face down on a lint-free soft surface to prevent scratching the display screen if not already installed in a control cabinet.

Remove expansion area cover by pressing down on the left and right line markings and at the same time, slide the cover in the direction of the embossed arrow.

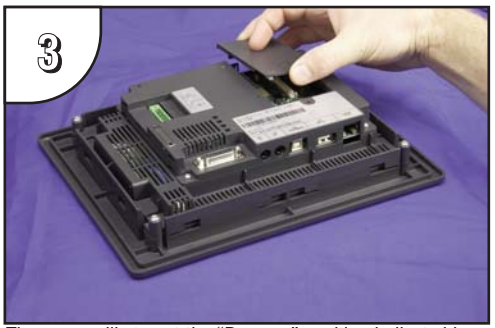

The cover will stop at the “Remove” position indicated by a tic mark on the cover lining up with the “Remove” tic mark on the panel. At this position, lift the cover up.

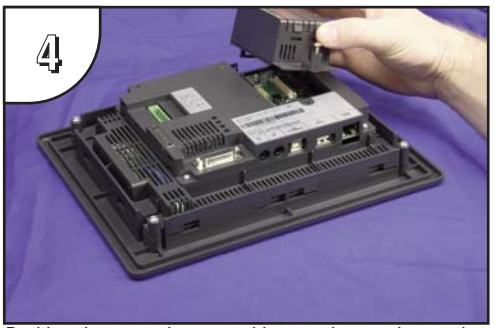

Position the expansion assembly over the opening so that the tic mark to the right of the fastening screw lines up with the “Remove” tic mark.

Expansion Assembly Installation (cont'd)

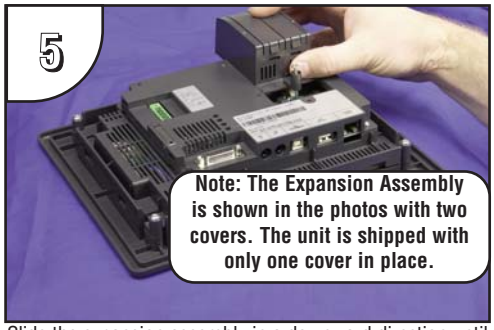

Slide the expansion assembly in a downward direction until the tic marks at the home position line up.

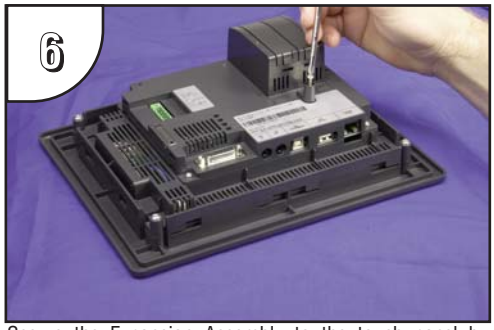

Secure the Expansion Assembly to the touch panel by tightening the spring loaded captive M3-20 screw to a torque of 50 oz-in [0.35 Nm].

CF Card Interface Module

The *C-more* CF Card Interface Module is used with the Expansion Assembly to allow use of CompactFlash™ cards, such as the CompactFlash Memory, EA-CF-CARD.

Part No. EA-CF-IF

CF Card Interface Module Dimensions

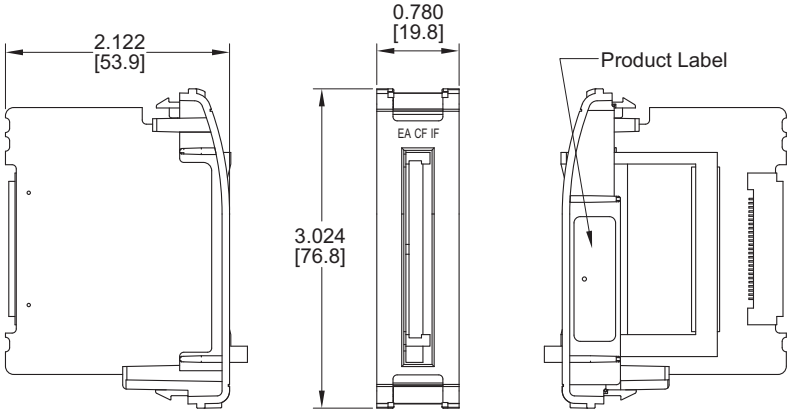

Units: inches [mm]

CF Card Interface Module Installation

WARNING: The CF Card Interface Module is designed to be installed in the right hand side slot of the Expansion Assembly only. This procedure should only be performed by qualified personnel who are experienced in working with electronic equipment. Take the necessary steps to prevent damage that may be caused by static electricity discharge. Disconnect input power to the touch panel before proceeding.

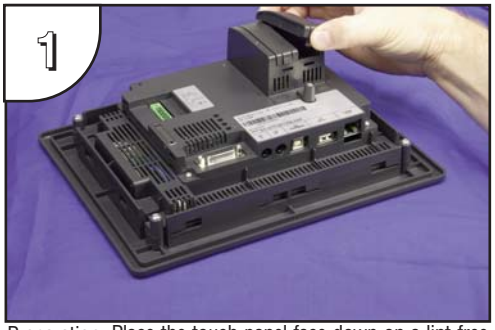

Preparation: Place the touch panel face down on a lint-free soft surface to prevent scratching the display screen if not already installed in a control cabinet. Again, make sure the input power is disconnected. Remove the right hand side protective slot cover, if it is installed, by squeezing the pinch tabs and lifting the cover off.

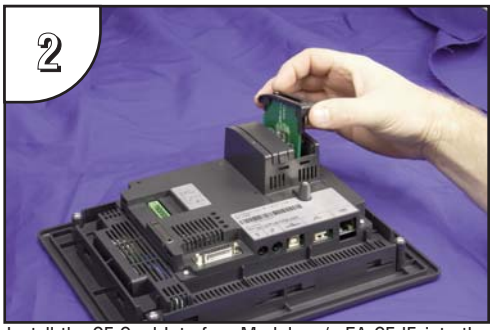

Install the CF Card Interface Module, p/n EA-CF-IF, into the right hand side slot by carefully aligning the female connector of the interface module with the male connector on the touch panel. There are PCB guides at the top and bottom of the slot to accept the edge of the Interface Module's printed circuit board. It is also helpful to preset the locking tabs of the Interface Module so they are swung inward, top and bottom.

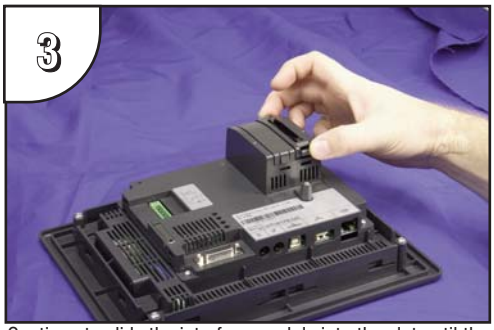

Continue to slide the interface module into the slot until the front of the module is flush with the front of the Expansion Assembly. Press on the front of the Interface Module until the locking tabs snap into place.

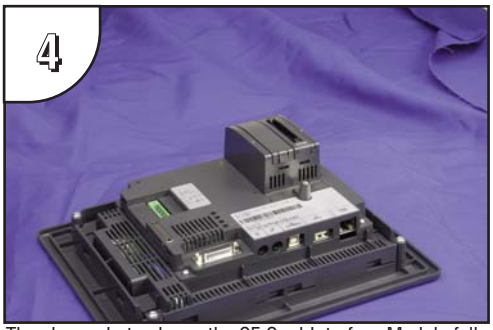

The above photo shows the CF Card Interface Module fully installed. To remove the Interface Module in the future, pry out on the top and bottom locking tabs at the same time and the module will release from the connector. Lift the module from the slot. The Interface Module should only be removed from the slot with input power disconnected.

CompactFlash Memory

EA-CF-CARD is a high speed industrial grade CompactFlash™ memory card for non-volatile storage. Its 85 °C operating temperature makes it perfect for data logging in industrial applications (recommended for ***C-more*** touch panels).

Part No. EA-CF-CARD

Specifications/Features:

- CompactFlash™ Compatibility
- W/E Endurance: 100,000 cycles
- Data transfer rate: 16MB/second
- Operating Temp: -13° to 185° F (-25° to 85° C)
- Operating Humity: 85% max, non-condensing
- Storage Temp: -13° to 194° F (-25° to 90° C)
- Storage Humity: 95% max, non-condensing

CF Slot #1 Location

CF Slot #2 Location

CompactFlash Memory Card Installation

WARNING: Take the necessary steps to prevent damage that may be caused by static electricity discharge. Disconnect input power to the touch panel before proceeding.

CF Card Installed in CF Slot #1:

Preparation: If the touch panel is not already installed into a control cabinet, then in a clean environment, place the panel face down on a lint-free soft surface to prevent scratching the front of the panel.

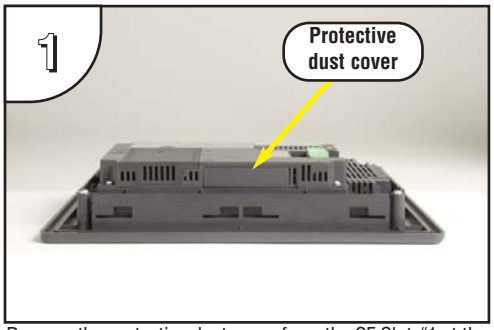

Remove the protective dust cover from the CF Slot #1 at the top of the touch panel by prying up on one edge. Discard the dust cover or store it for future use when a CF card is not being used.

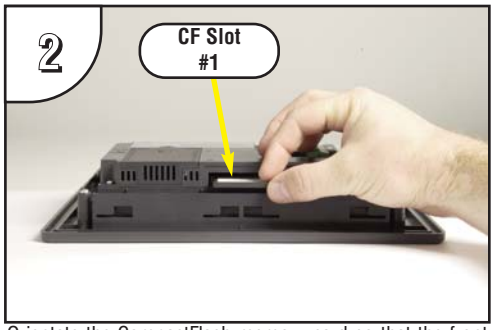

Orientate the CompactFlash memory card so that the front label is facing the back of the panel and the CF card connector faces into the slot. There are guides on each side of the slot that will match the guides on the CF card. The CF card can only be inserted one way.

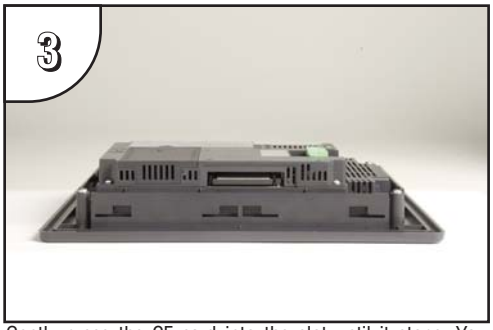

Gently press the CF card into the slot until it stops. You should feel a slight resistance as the CF card connector mates with the slot's connector. The CF card should be flush with the slot's opening. The dust cover can then be re-installed.

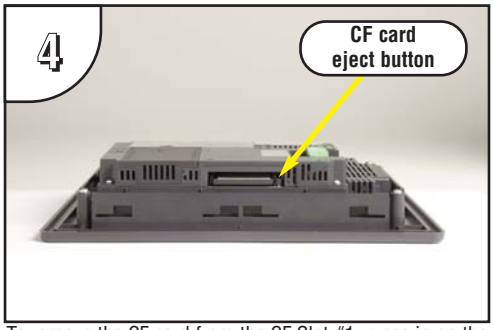

To remove the CF card from the CF Slot #1, press in on the eject button to the right of the CF card. This will cause the CF card to be partially ejected from the slot allowing removal.

WARNING: Do NOT use EZTouch RAM or Flash memory cards with the *C-more* touch panels.

CompactFlash Memory Card Installation (cont'd)

CF Card Installed in CF Slot #2:

Preparation: **Disconnect input power and all other connections, then remove the touch panel from the control cabinet. In a clean environment, place the panel face down on a lint-free soft surface to prevent scratching the front of the panel.**

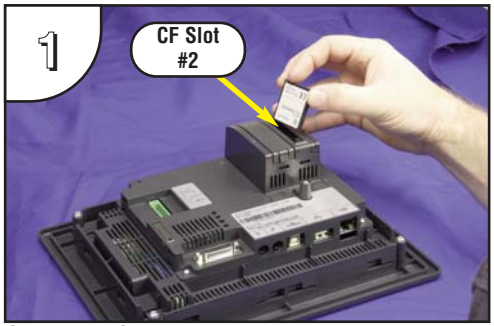

Orientate the CompactFlash memory card so that the front label is facing the power supply connector and the CF card connector faces into the slot. There are guides on each side of the slot that will match the guides on the CF card. The CF card can only be inserted one way.

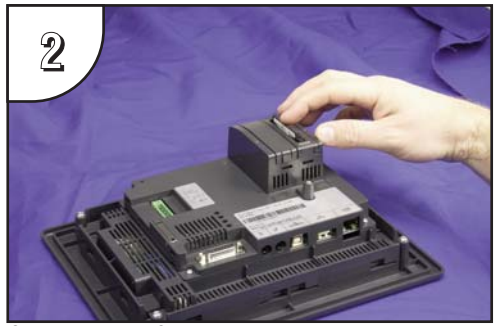

Gently press the CF card into the slot until it stops. You should feel a slight resistance as the CF card connector mates with the slot's connector. The CF card should be flush with the slot's opening.

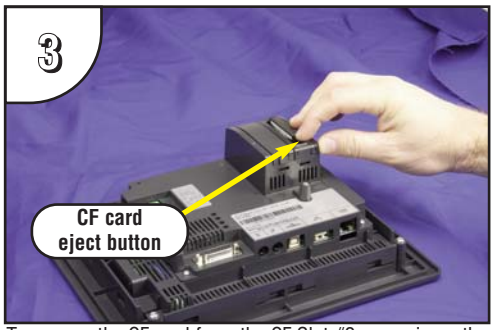

To remove the CF card from the CF Slot #2, press in on the eject button at the bottom of the CF card. This will cause the CF card to be partially ejected from the slot allowing removal.

WARNING: Do NOT use EZTouch RAM or Flash memory cards with the *C-more* touch panels.

6” Adapter Plate

The adapter plate has been designed to simplify the retrofit of a new ***C-more*** 6” touch panel into an existing cabinet cutout for an **EZTouch** 6” non-slim touch panel, such as ***AutomationDirect*** part number EZ-S6C-K, EZ-S6C-F, EZ-S6M-R or EZ-S6M-F. The new ***C-more*** 6” touch panel will directly mount into the existing cutout opening for any **EZTouch** 6” slim touch panel.

Part No. EA-6-ADPTR

6” Adapter Plate Cutout Dimensions

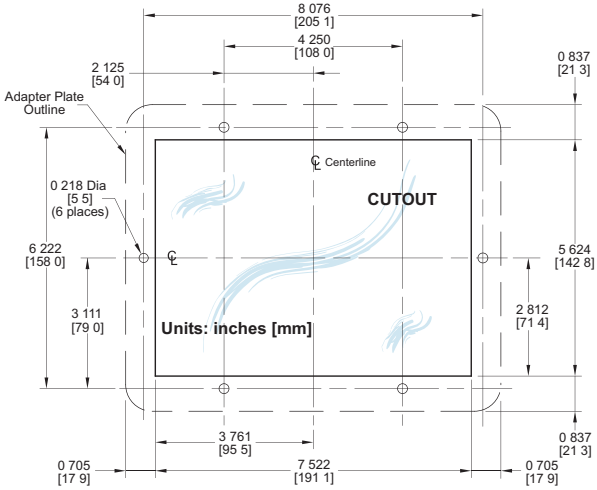

6” Adapter Plate Dimensions

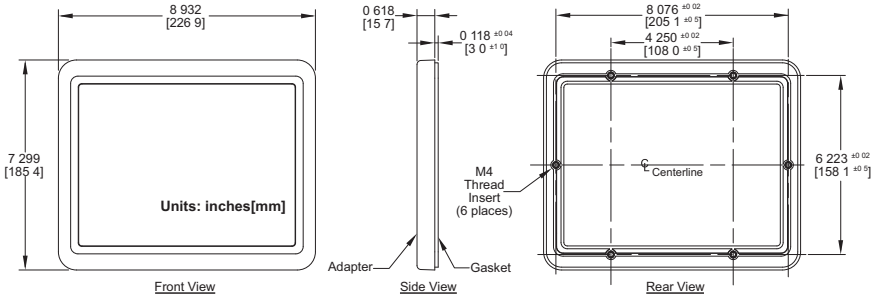

6” Adapter Plate Installation

The adapter plate has been designed to simplify the retrofit of a new ***C-more*** 6” touch panel into an existing cabinet cutout for an **EZTouch** 6” non-slim touch panel, such as our part number EZ-S6C-K, EZ-S6C-F, EZ-S6M-R or EZ-S6M-F. The new ***C-more*** 6” touch panel will directly mount into the existing cutout opening for any **EZTouch** 6” slim touch panel.

Two sets of mounting screws are provided with the adapter plate. Set A contains six M4 metric screws by 8mm in length for a control cabinet thickness range of 0.02-0.118” [0.5-3mm]. Set B contains six M4 metric screws by 10mm in length for a control cabinet thickness range of 0.118-0.197” [3-5mm]. Mounting screw torque: 100 oz-in [0.7 Nm].

The two DIN mounting clips that secure the ***C-more*** 6” touch panel to the adapter plate are provided with the touch panel. The adapter plate has an integral sealing gasket and the touch panel includes a gasket to seal the panel to the adapter.

Use of the adapter plate will maintain the NEMA 4/4X (indoor) rating of the ***C-more*** touch panel.

Dimensions for the cutout with mounting hole locations and an assembly diagram are shown in this chapter.

Preparation: Confirm the existing cutout with the dimensions shown on the previous page when using the adapter plate to replace an existing **EZTouch** 6” non-slim touch panel with a new ***C-more*** 6” touch panel.

WARNING: Mount the adapter plate and touch panel on a vertical surface to allow proper cooling.

6” Adapter Plate Assembly

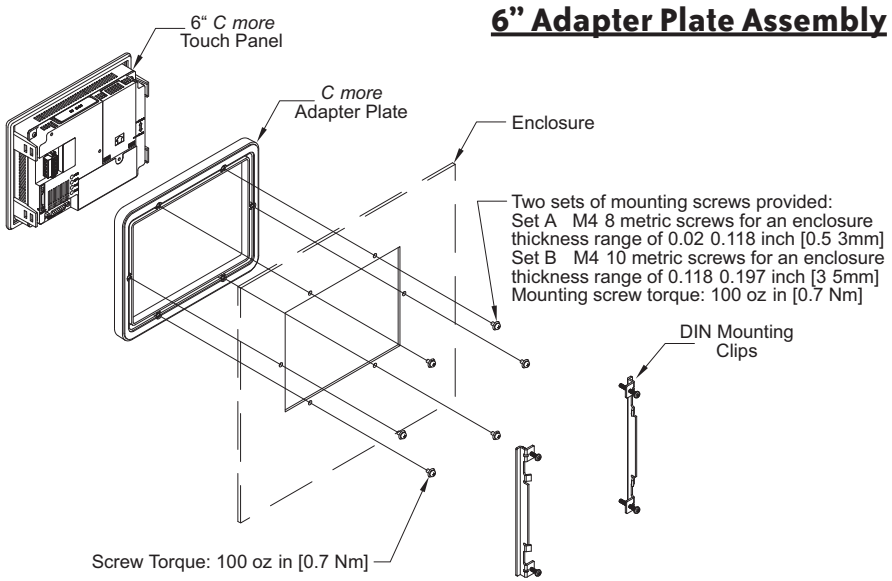

D-SUB 15-pin 90 degree Comm Port Adapter

The EA-ADPTR-4 adapter is plugged into the 15-pin serial port on the rear of the panel to allow a PLC communication cable to be plugged in at a 90 degree angle to reduce panel depth requirements. UL Recognized.

Part No. EA-ADPTR-4

Panel Dimensions with Connector Installed

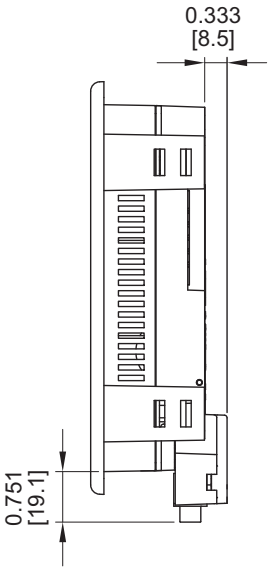

Comm Port Adapter Dimensions

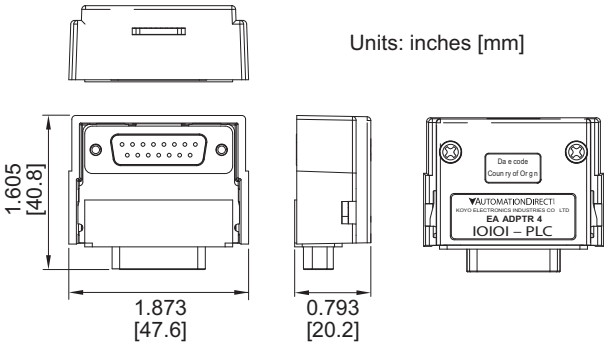

Installation

D-SUB 15-pin to Terminal Block Adapter

The EA-COMCON-3 adapter is plugged into the 15-pin serial port on the rear of the panel to allow wire terminal connections for RS-422/485 PLC communication cable. UL Recognized.

Part No. EA-COMCON-3

3

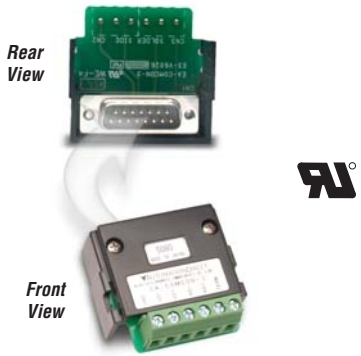

Panel Dimensions with Connector Installed

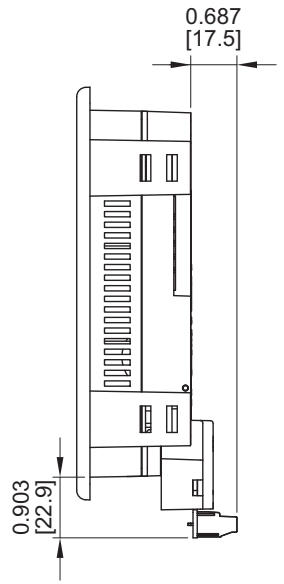

Terminal Block Adapter Dimensions

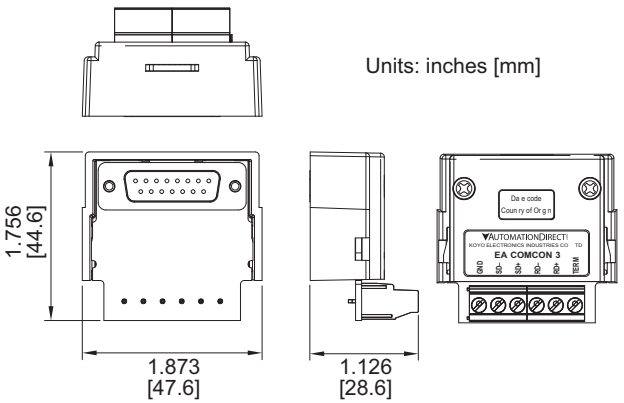

Installation

D-SUB 15-pin to Terminal Block Adapter (cont'd)

Terminal Block Adapter Wiring Diagram

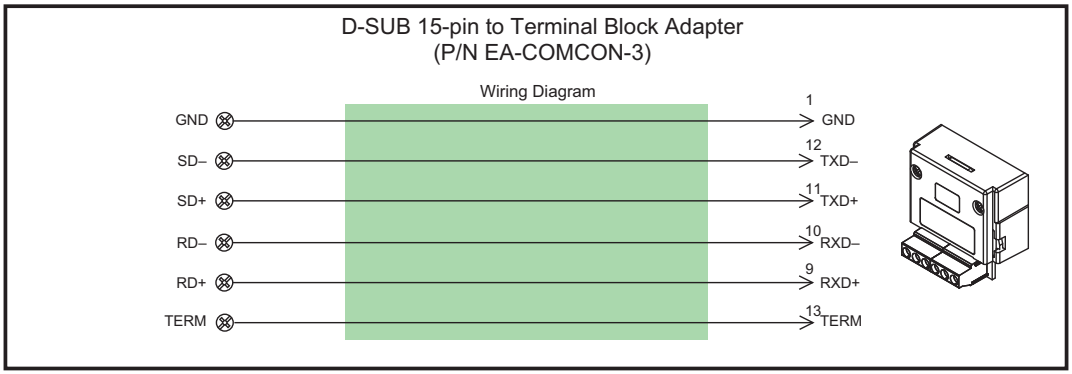

Terminal Block Adapter Terminal Designations

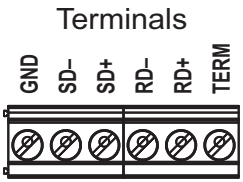

Non-glare Screen Covers

Non Glare 6 Inch Screen Cover, protective overlay used to protect the touch screen while helping to reduce the glare from external light sources. (pk of 3)

Part No. EA-6-COV2, EA-8-COV2, EA-10-COV2, EA-12-COV2 & EA-15-COV2

3

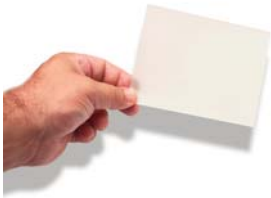

Screen Cover Dimensions

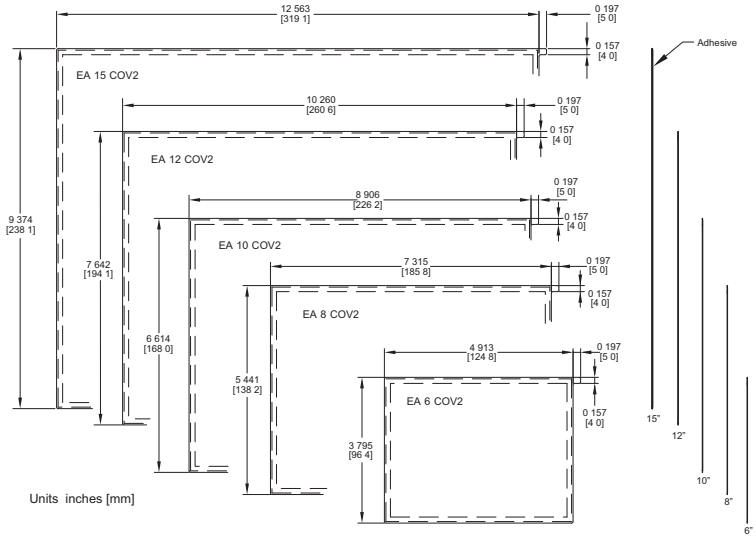

Non-glare Screen Covers (cont'd)

Clear Screen Overlay Installation

Step 1

Check to be sure that the proper size non-glare screen cover is being used on the subject touch panel. Notice that the outer perimeter of the screen cover has an adhesive band. The adhesive band will be located on the outside edge of the touch panel's white frame bordering the touch area when installed.

Step 2

Start in one corner and peel the screen cover from the backing.

Step 3

Align the screen cover over the touch panel's white frame, then start on one side and gently lay the cover over the entire touch area.

Step 4

Smooth out the screen cover and press all around the outside perimeter to secure the cover in place. The screen cover can be removed by lifting up on the small tab and gently pulling the cover away form the touch panel's surface.

Step 5

Remove the protective sheet.

***NOTE**: The protective cover ships with a thin protective sheet on the face of the cover that needs to be carefully removed. If your panel is not clear, the protective sheet may not have been removed.*

USB Pen Drive

The SanDisk Cruzer Micro is an extremely small 2 GB USB Flash Drive (UFD) that connects to a USB port. Users can easily store their logging data, project data, key documents and images on a Cruzer Micro and transfer them to another computer with a USB port.

SDCZ4-2048-A10 sold by AutomationDirect has been tested with ***C-more*** panels.

Part No. SDCZ4-2048-A10

Specifications/Features:

- Dimensions: 7.9mm x 18.95mm x 52.2mm (H x W x L)
- Hi-Speed USB 2.0 certified (backwards compatible with all USB 1.1 ports)
- Compatible with Windows 98SE, ME, 2000, XP, Vista and Mac OS 9.1.x+, OS X v10.1.2+
- Certified Windows XP and Mac OS X

Installation & Wiring

Chapter 4

In This Chapter...

Safety Guidelines 4–2

Introduction 4–3

EA7-S6M-R, S6C-R, T6CL-R, S6M, S6C, T6C, T6CL – Cutout Dimensions 4–4

EA7-T8C – Cutout Dimensions 4–5

EA7-T10C – Cutout Dimensions 4–6

EA7-T12C – Cutout Dimensions 4–7

EA7-T15C – Cutout Dimensions 4–8

6″ Adapter Plate – EA-6-ADPTR 4–9

Mounting Clearances 4–11

Wiring Guidelines 4–12

Agency Approvals 4–12

Marine Use 4–12

Providing Power to the Touch Panel 4–13

DC Wiring Diagram 4–13

AC Wiring Diagram (EA-AC) 4–14

Safety Guidelines

NOTE: Products with CE marks *perform their required functions safely and adhere to relevant standards as specified by CE directives provided they are used according to their intended purpose and that the instructions in this manual are adhered to. The protection provided by the equipment may be impaired if this equipment is used in a manner not specified in this manual. A listing of our international affiliates is available on our Web site: http://www.automationdirect.com*

WARNING: Providing a safe operating environment for personnel and equipment is your responsibility and should be your primary goal during system planning and installation. Automation systems can fail and may result in situations that can cause serious injury to personnel or damage to equipment. Do not rely on the automation system alone to provide a safe operating environment. You should use external electromechanical devices, such as relays or limit switches, that are independent of the PLC application to provide protection for any part of the system that may cause personal injury or damage. Every automation application is different, so there may be special requirements for your particular application. Make sure you follow all national, state, and local government requirements for the proper installation and use of your equipment.

Plan for Safety

The best way to provide a safe operating environment is to make personnel and equipment safety part of the planning process. You should examine *every* aspect of the system to determine which areas are critical to operator or machine safety. If you are not familiar with control system installation practices, or your company does not have established installation guidelines, you should obtain additional information from the following sources.

- NEMA — The National Electrical Manufacturers Association, located in Washington, D.C. publishes many different documents that discuss standards for industrial control systems. You can order these publications directly from NEMA. Some of these include:

  ICS 1, General Standards for Industrial Control and Systems

  ICS 3, Industrial Systems

  ICS 6, Enclosures for Industrial Control Systems

- NEC — The National Electrical Code provides regulations concerning the installation and use of various types of electrical equipment. Copies of the NEC Handbook can often be obtained from your local electrical equipment distributor or your local library.
- Local and State Agencies — many local governments and state governments have additional requirements above and beyond those described in the NEC Handbook. Check with your local Electrical Inspector or Fire Marshall office for information.

Introduction

The installation and wiring of the *C-more*® touch panels requires selecting an appropriate location for the touch panel, laying out the cutout dimensions on the surface of the control cabinet that the panel will be mounted through, securing the touch panel with the provided mounting clips, tightening the screws to the appropriate torque rating to assure the gasket is sealing correctly, and finally connecting the appropriate power source to the touch panel.

WARNING: *C-more* touch panels need to be mounted on a vertical surface to ensure proper cooling of the panel and its components.

***Note**: Each **C-more** touch panel is provided with a cutout template to make marking the proper cutout size on the surface of the control cabinet that the panel will be mounted through a simple task.*

The *C-more* 6" touch panels include two mounting clips. The clips can be viewed as a long metal bracket with two screws in each clip. The 6" panel clips can be fitted to the touch panel at two different depth locations that allow the 6" panel to be mounted through a wide range of enclosure thicknesses. The 8" through 12" touch panels include six mounting clips while the 15" touch panel includes eight. The 8" through 15" panel mounting clips are all the same. They are fitted to the touch panel by inserting two tabs into mating wide slots around th panel and then sliding the clip into a narrower slot to secure it in place. There is one screw on each clip that needs tightening to secure the panel in place.

Any *C-more* touch panel can be mounted directly through the existing cutout of a same size **EZTouch** slim touch panel. There is a simple solution for the need to replace an EZTouch 6" non-slim (rounded bezel) touch panel as explained in the following note.

***NOTE**: The **C-more** 6" touch panels will fit into the existing cutout of any **EZTouch** 6" slim bezel panel. Use the **C-more** 6" Adapter Plate, EA-6-ADPTR, to install **C-more** 6" panels into existing cutouts of **EZTouch** 6" non-slim (rounded bezel) panels. The adapter plate gasket is included.*

This chapter only covers the proper mounting of the touch panel and connecting power. Once power is applied to the touch panel, the user will want to read Chapter 5 on the System Setup Screens in order to set the internal time and date for the panel, check the information menu to make sure the panel is the correct unit for the application and is the latest version, set communication port parameters that may be required, become familiar with the touch panel test features, and check memory options.

The next step will be to select the appropriate PLC protocol and communications cable as described in Chapter 6.

6" Mounting Clips

8-15" Mounting Clip

EA7-S6M-R, S6C-R, T6CL-R, S6M, S6C, T6C, T6CL – Cutout Dimensions

The *C-more* 6" touch panels are mounted into a cutout through the control cabinet and secured with two (2) mounting clips. The mounting clips are provided with the touch panel. There is a set of four (4) rectangular holes (slots) on each side of the touch panel's short dimension that the two tabs on each mounting clip will match. You will need to select either the upper or lower set of holes depending on your control cabinet's material thickness. The table below shows the different thickness ranges. The mounting clips are held in place, and pull the front bezel of the panel tight to the mounting surface, by tightening the screws into the rear of the control cabinet. The screws need to be tightened to the torque rating shown in the table below so that the gasket is compressed to form the proper seal between the panel and cabinet surface.

Note: *Mount the touch panel on a vertical surface to allow convection air flow for proper cooling.*

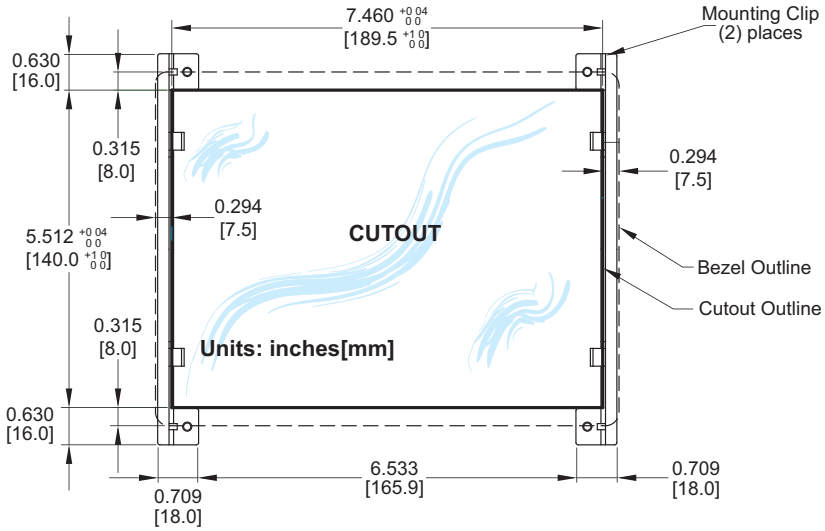

Enclosure Mounting Thickness Ranges and Mounting Clip Screw Torque

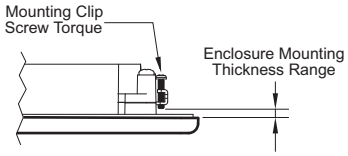

Touch Panel Size	Enclosure Thickness Range	Mounting Clip Screw Torque
6" – lower mounting clip position	0.039 - 0.24 inch [1 – 6 mm]	35 ~ 50 oz-in [0.25 ~ 0.35 Nm]
6" – upper mounting clip position	0.20 - 0.63 inch [5 – 16 mm]	35 ~ 50 oz-in [0.25 ~ 0.35 Nm]

EA7-T8C – Cutout Dimensions

The *C-more* 8" touch panels are mounted into a cutout through the control cabinet and secured with six (6) mounting clips. The mounting clips are provided with the touch panel. The mounting clips will insert into a series of slots around the rear perimeter of the touch panel. Each clip has two tabs that will mate to two slots, using the larger rectangular holes. The mounting clips are held in place by sliding the clip toward the smaller rectangular holes. The screw of each mounting clip needs to be tightened to the torque rating shown in the table below so that the gasket is compressed to form the proper seal between the panel and cabinet surface.

Note: *Mount the touch panel on a vertical surface to allow convection air flow for proper cooling.*

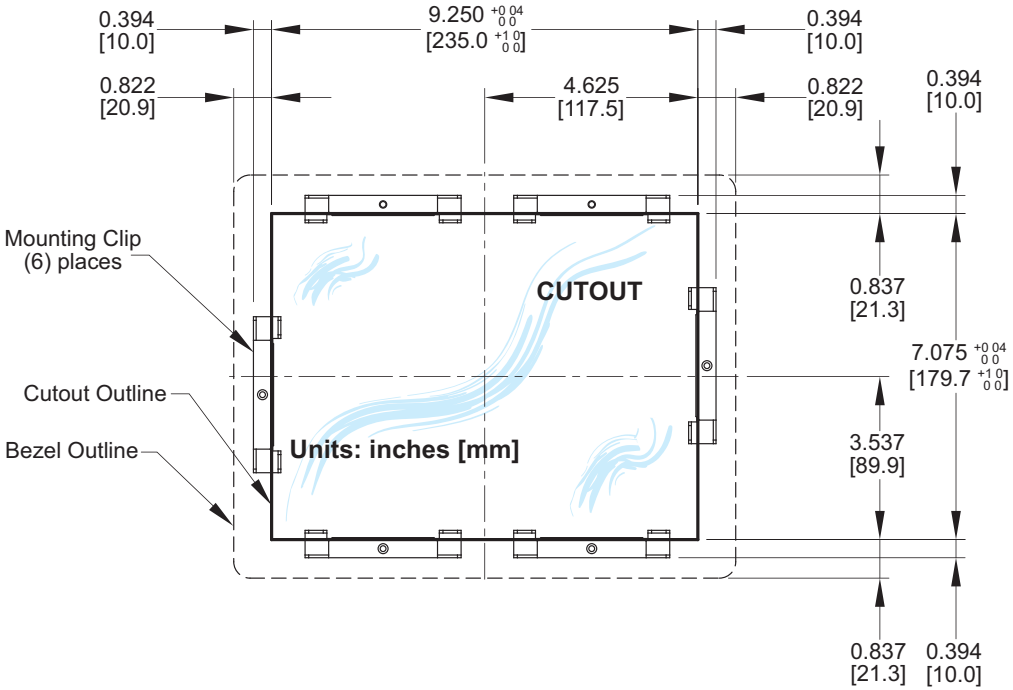

Enclosure Mounting Thickness Ranges and Mounting Clip Screw Torque

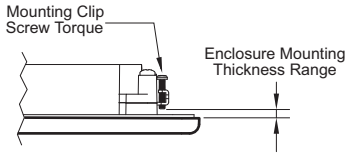

Touch Panel Size	Enclosure Thickness Range	Mounting Clip Screw Torque
8", 10", 12" & 15"	0.039 - 0.20 inch [1 – 5 mm]	42 ~ 57 oz-in [0.3 ~ 0.4 Nm]

EA7-T10C – Cutout Dimensions

The *C-more* 10" touch panels are mounted into a cutout through the control cabinet and secured with six (6) mounting clips. The mounting clips are provided with the touch panel. The mounting clips will insert into a series of slots around the rear perimeter of the touch panel. Each clip has two tabs that will mate to two slots, using the larger rectangular holes. The mounting clips are held in place by sliding the clip toward the smaller rectangular holes. The screw of each mounting clip needs to be tightened to the torque rating shown in the table below so that the gasket is compressed to form the proper seal between the panel and cabinet surface.

Note: *Mount the touch panel on a vertical surface to allow convection air flow for proper cooling.*

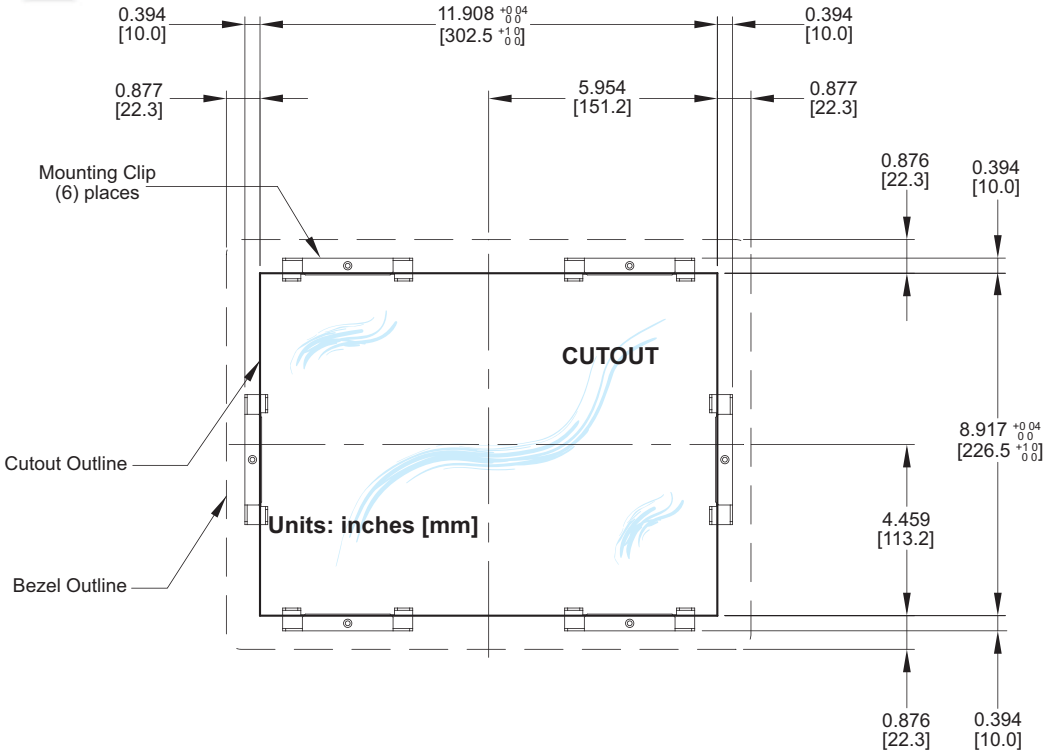

Enclosure Mounting Thickness Ranges and Mounting Clip Screw Torque

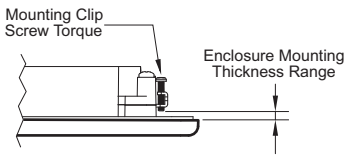

Touch Panel Size	Enclosure Thickness Range	Mounting Clip Screw Torque
8", 10", 12" & 15"	0.039 - 0.20 inch [1 – 5 mm]	42 ~ 57 oz-in [0.3 ~ 0.4 Nm]

EA7-T12C – Cutout Dimensions

The *C-more* 12" touch panels are mounted into a cutout through the control cabinet and secured with six (6) mounting clips. The mounting clips are provided with the touch panel. The mounting clips will insert into a series of slots around the rear perimeter of the touch panel. Each clip has two tabs that will mate to two slots, using the larger rectangular holes. The mounting clips are held in place by sliding the clip toward the smaller rectangular holes. The screw of each mounting clip needs to be tightened to the torque rating shown in the table below so that the gasket is compressed to form the proper seal between the panel and cabinet surface.

Note: *Mount the touch panel on a vertical surface to allow convection air flow for proper cooling.*

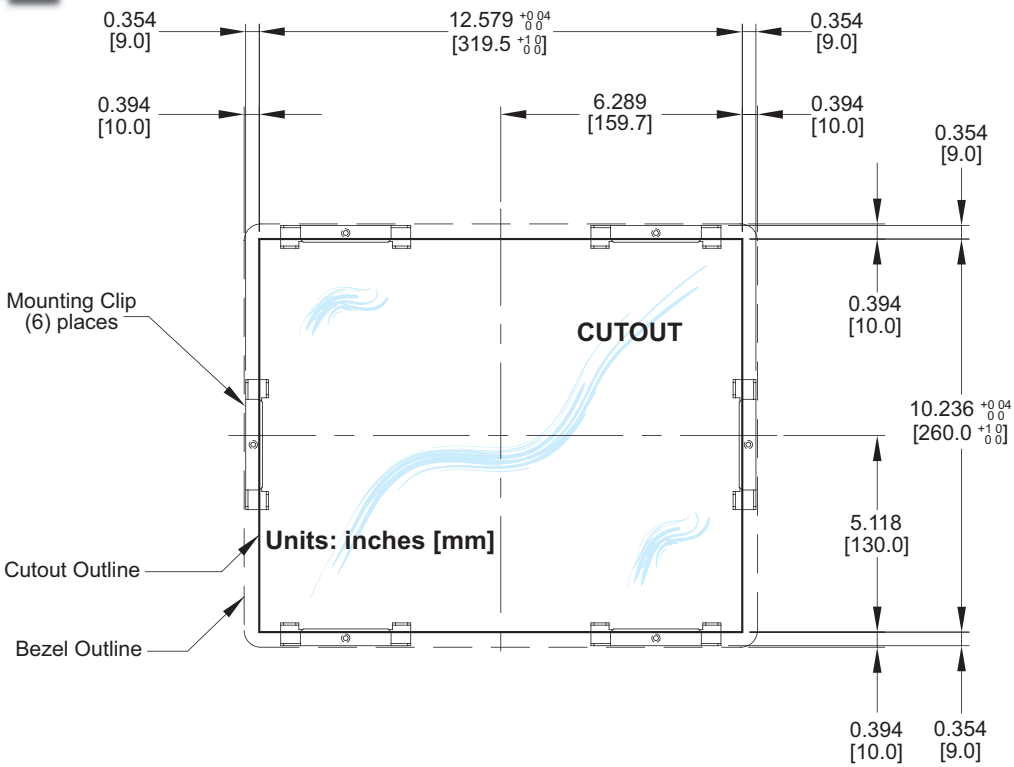

Enclosure Mounting Thickness Ranges and Mounting Clip Screw Torque

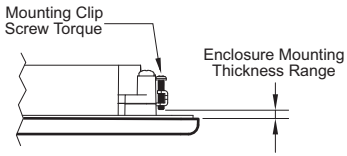

Touch Panel Size	Enclosure Thickness Range	Mounting Clip Screw Torque
8", 10", 12" & 15"	0.039 - 0.20 inch [1 – 5 mm]	42 ~ 57 oz-in [0.3 ~ 0.4 Nm]

EA7-T15C – Cutout Dimensions

The *C-more* 15" touch panels are mounted into a cutout through the control cabinet and secured with eight (8) mounting clips. The mounting clips are provided with the touch panel. The mounting clips will insert into a series of slots around the rear perimeter of the touch panel. Each clip has two tabs that will mate to two slots, using the larger rectangular holes. The mounting clips are held in place by sliding the clip toward the smaller rectangular holes. The screw of each mounting clip needs to be tightened to the torque rating shown in the table below so that the gasket is compressed to form the proper seal between the panel and cabinet surface.

Note: *Mount the touch panel on a vertical surface to allow convection air flow for proper cooling.*

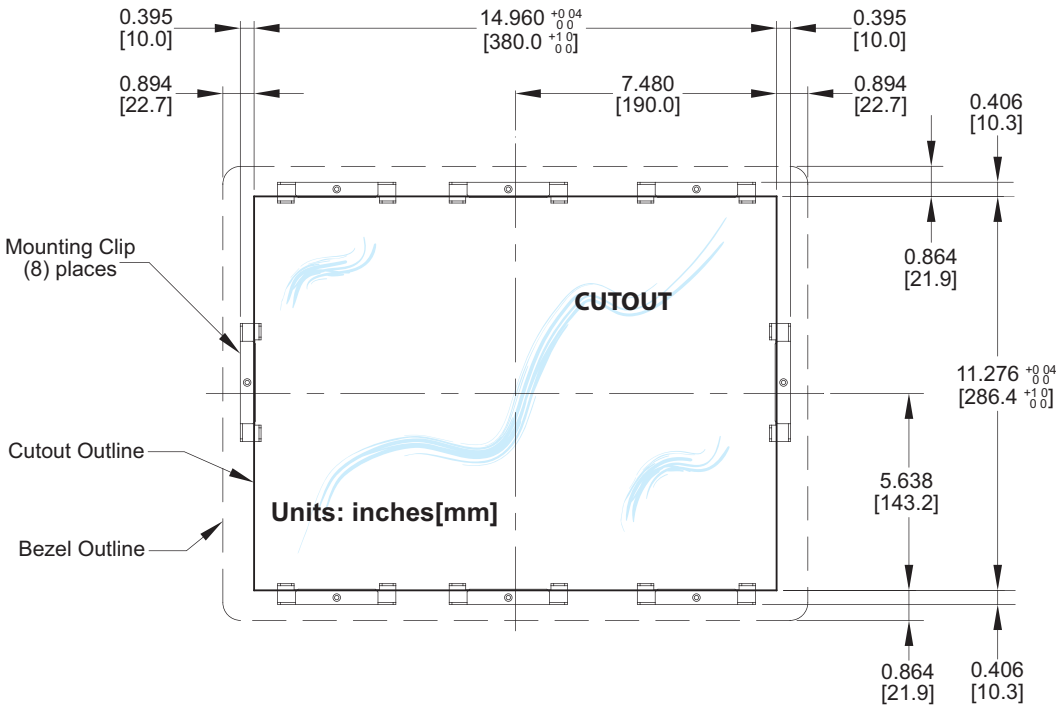

Enclosure Mounting Thickness Ranges and Mounting Clip Screw Torque

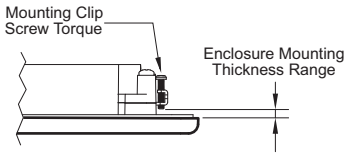

Touch Panel Size	Enclosure Thickness Range	Mounting Clip Screw Torque
8", 10", 12" & 15"	0.039 - 0.20 inch [1 – 5 mm]	42 ~ 57 oz-in [0.3 ~ 0.4 Nm]

6” Adapter Plate

Use the ***C-more*** 6” Adapter Plate, p/n EA-6-ADPTR, to install a ***C-more*** 6” touch panel into the existing cutout of an **EZTouch** 6” non-slim (rounded bezel) touch panel. Gasket and mounting hardware is included.

Part No. EA-6-ADPTR

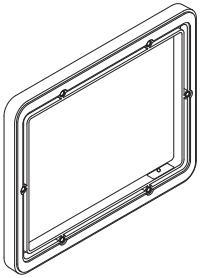

6” Adapter Plate Assembly

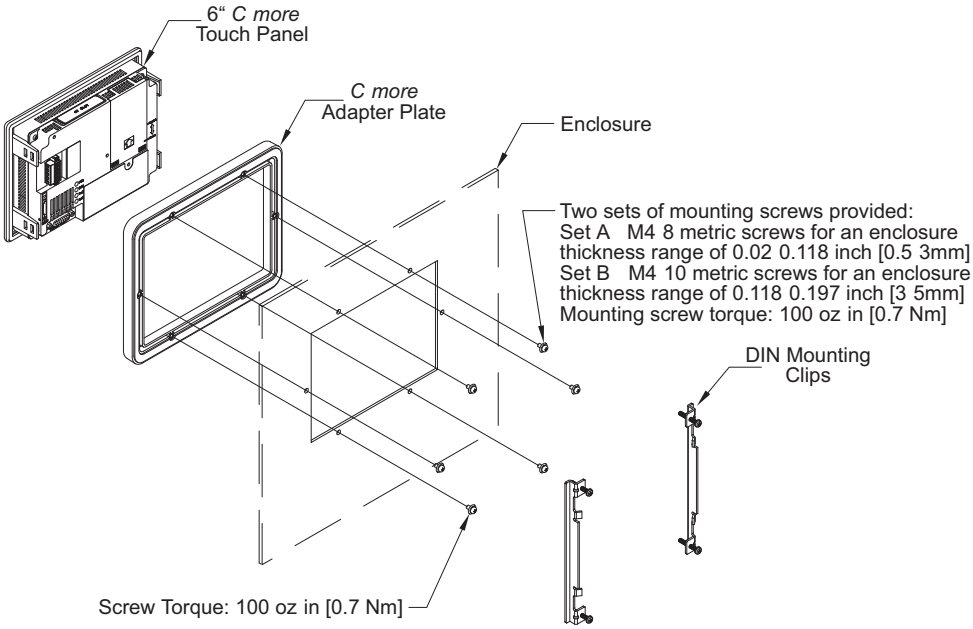

6” Adapter Plate (cont’d)

6” Adapter Plate Dimensions

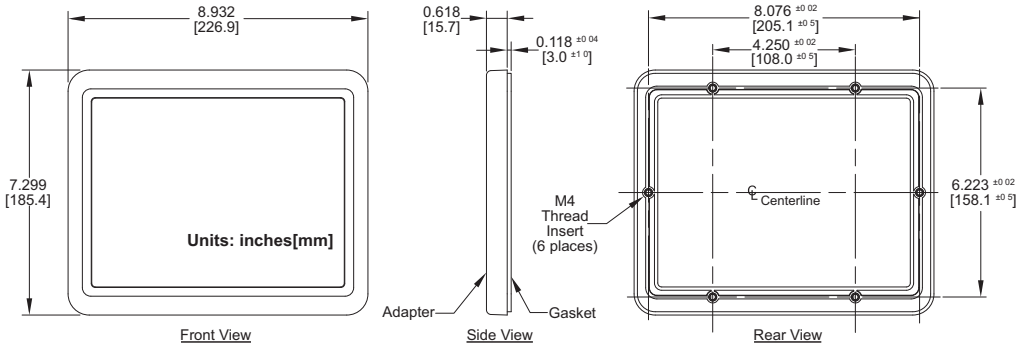

6” Adapter Plate Cutout Dimensions

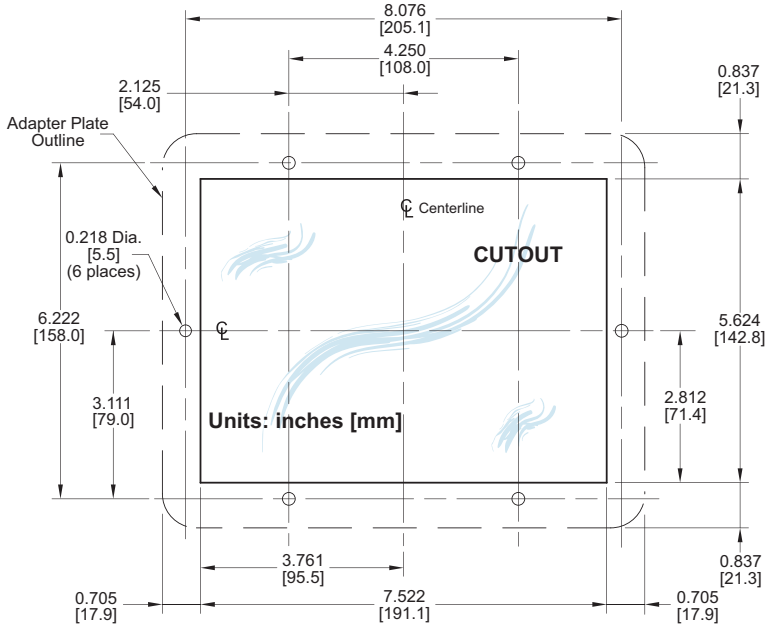

Mounting Clearances

The following drawing shows the mounting clearances for the *C-more* touch panel. There should be a minimum of 4 inches of space between all sides of the panel and the nearest object or obstruction and at least 2 inches between the rear of the panel and the nearest object or obstruction.

Note: *Make sure the touch panel is mounted on a vertical surface to allow convection air flow for proper cooling.*

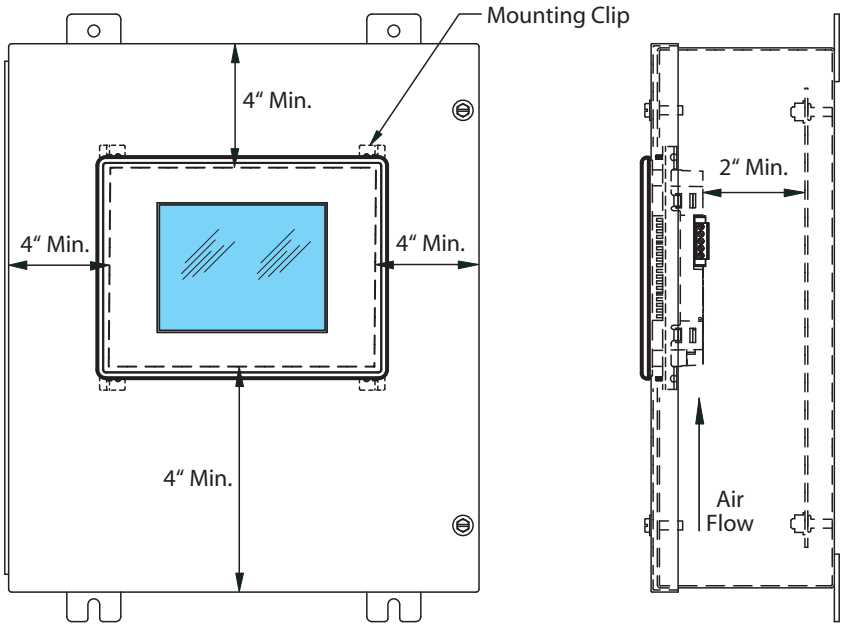

Front View

Side View

Wiring Guidelines

WARNING: To minimize the risk of potential safety problems, you should follow all applicable local and national codes that regulate the installation and operation of your equipment. These codes vary from area to area and it is your responsibility to determine which codes should be followed, and to verify that the equipment, installation, and operation are in compliance with the latest revision of these codes.
Equipment damage or serious injury to personnel can result from the failure to follow all applicable codes and standards. We do not guarantee the products described in this publication are suitable for your particular application, nor do we assume any responsibility for your product design, installation, or operation.
If you have any questions concerning the installation or operation of this equipment, or if you need additional information, please call us at 1-800-633-0405 or 770-844-4200.
This publication is based on information that was available at the time it was printed. At Automationdirect.com® we constantly strive to improve our products and services, so we reserve the right to make changes to the products and/or publications at any time without notice and without obligation. This publication may also discuss features that may not be available in certain revisions of the product.

Agency Approvals

Some applications require agency approvals for particular components. The *C-more* touch panel agency approvals are listed below:

- UL (Underwriters' Laboratories, Inc.)
- CUL (Canadian Underwriters' Laboratories, Inc.)
- CE (European Economic Union)

Marine Use

American Bureau of Shipping (ABS) certification requires flame-retarding insulation as per 4-8-3/5.3.6(a). ABS will accept Navy low smoke cables, cable qualified to NEC "Plenum rated" (fire resistant level 4), or other similar flammability resistant rated cables. Use cable specifications for your system that meet a recognized flame retardant standard (i.e. UL, IEEE, etc.), including evidence of cable test certification (i.e. tests certificate, UL file number, etc.).

NOTE: *Wiring needs to be "low smoke" per the above paragraph. Teflon coated wire is also recommended.*

Wiring Guidelines (cont'd)

Providing Power to the Touch Panel

- **Connect** a **dedicated** 24 VDC (20.4 - 28.8 VDC) switching power supply rated for a minimum of 1.5 A to the DC connector on the rear of the ***C-more*** touch panel. Connect the ground terminal to a proper equipment ground.
- **or** install a ***C-more*** AC/DC Power Adapter (EA-AC) to the rear of the touch panel and connect an AC voltage source of 100-240 VAC, 50/60Hertz, to its AC connector.
- **then** turn on the power source and check the LED status indicators on the rear of the ***C-more*** touch panel for proper operation. See the LED Status Indicator diagram on the next page for reference.

DC Wiring Diagram

DC Wiring

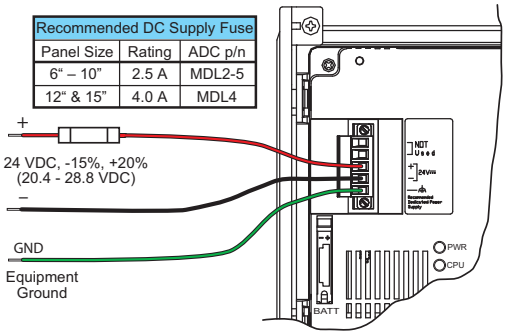

Recommended DC Supply Fuse		
Panel Size	Rating	ADC p/n
6" – 10"	2.5 A	MDL2-5
12" & 15"	4.0 A	MDL4

Recommended DC Power Supply:
***AutomationDirect* Part No. PS24-050D**

Wiring Guidelines (cont'd)

AC Wiring Diagram

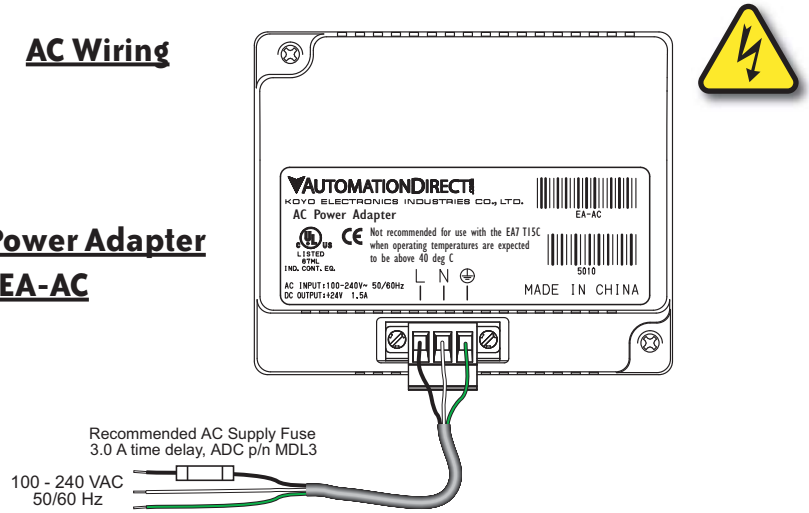

WARNING: The AC/DC Power Adapter is not recommended for use with the EA7-T15C touch panel when operating temperatures are expected to exceed 40 °C [104 °F].

Note: *Power Fault features help protect data being logged to CompactFlash during power failures. The* ***C-more*** *panel must have firmware version 1.21 Build 6.18E or higher for proper operation.*

C-more LED Status Indicators

CPU Status LED (Green, Orange & Red)	
Off	Power Off
Green	Normal CPU Run State
Red	Memory Error
Blinking Red	Operating System not found
Blinking Orange	LCD Backlight Failure
Blinking Green	Power Loss Detection

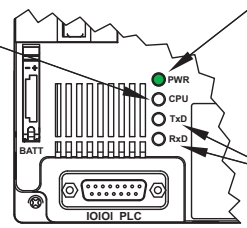

Rear View

Power LED (Green)	
On	Power On
Off	Power Off

Serial TxD/RxD LED (Green)	
On	Comm. is active
Off	No communication

System Setup Screens

Chapter 5

In This Chapter...

Introduction 5–2
Chapter Organization 5–3
Accessing the System Setup Screens (no project loaded) 5–4
Accessing the System Setup Screens (with project loaded) 5–5
System Setup Screens – Enable Password in Software 5–7
System Setup Screens Flowchart 5–13
Main Menu 5–14
Information Menu 5–15
Setting Menu 5–19
Test Menu 5–25
Memory Menu 5–35

Introduction

The *C-more* touch panels include a series of built-in **System Setup Screens** that allow the user to view detailed information about the panel, adjust certain features, configure communications, test various functions of the touch panel, backup & restore system, recipe, log and project memory, clear memory, and reset all values and conditions back to the original factory defaults.

The following is presented to give the user a detailed step by step look at 1.) how to access the System Setup Screens, 2.) what adjustments and features are available, 3.) when and why the feature may need to be adjusted or used, and 4.) how to adjust and/or interrupt the features.

The System Setup Screens from the Main Menu are split into four different categories to make it simple for the user to select the area for viewing information, making adjustments, testing the touch panel or working with the internal and/or external memory options. The four Main Menu selections are:

Information

Here you will find detailed information in regards to the touch panel model, the panel's name, version information for the hardware, boot loader and firmware, clock source, battery status and beeper status. Also available are details on the panel's internal memory and the status of any external memory devices, such as CompactFlash memory and USB pen drives. Communication port details are also available in this area, as well as an error log to help in trouble-shooting the system.

Setting

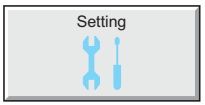

This is the area for 1.) making adjustments to the internal clock, 2.) adjusting the brightness (color panels) and contrast (grayscale panels) of the display, 3.) adjusting (calibrating) the touch panel, 4.) enabling or disabling the internal beeper, and 5.) the IP Address of the touch panel can also be configured from this menu area. Access to the IP Address Setting screen is covered later in this chapter.

Test Menu

From this sub menu, the user can 1.) test the touch panel, 2.) test the display, 3.) test the communication ports, and 4.) test both the internal beeper or the audio line output, if a speaker with an amplifier is connected. A WAV sound file is system provided for the audio line output test.

Memory

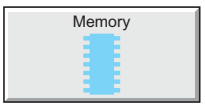

Select the Memory menu item to either backup or restore your project, log data, recipe data and/or system memory. Selections can be made to backup to optional CompactFlash memory or USB pen drive memory. The menu selections also give the user the ability to clear the memory, and there is also a selection to reset all of the touch panel settings back to the original factory defaults.

Chapter Organization

The **System Setup Screens** chapter is organized in the following order:

1.) Accessing the system setup screens with **no project loaded** will take the user directly to the **Main Menu** – page 5-4.

2.) Accessing the system setup screens with a **project loaded** will first take the user to a dialog box **warning** the user that the panel will stop running and waits for an acknowledgement – page 5-5.
a.) If a **password is not enabled**, the user is taken directly to the **Main Menu** after the warning message is acknowledged – page 5-6.
b.) If a **password is enabled**, then the **Enter Security Code** keypad is presented after the warning message is acknowledged – page 5-6.

3.) How to **enable a password** in the ***C-more*** Programming software is explained – page 5-7.

4.) **System Setup Screens** organized as shown in the following flowchart:

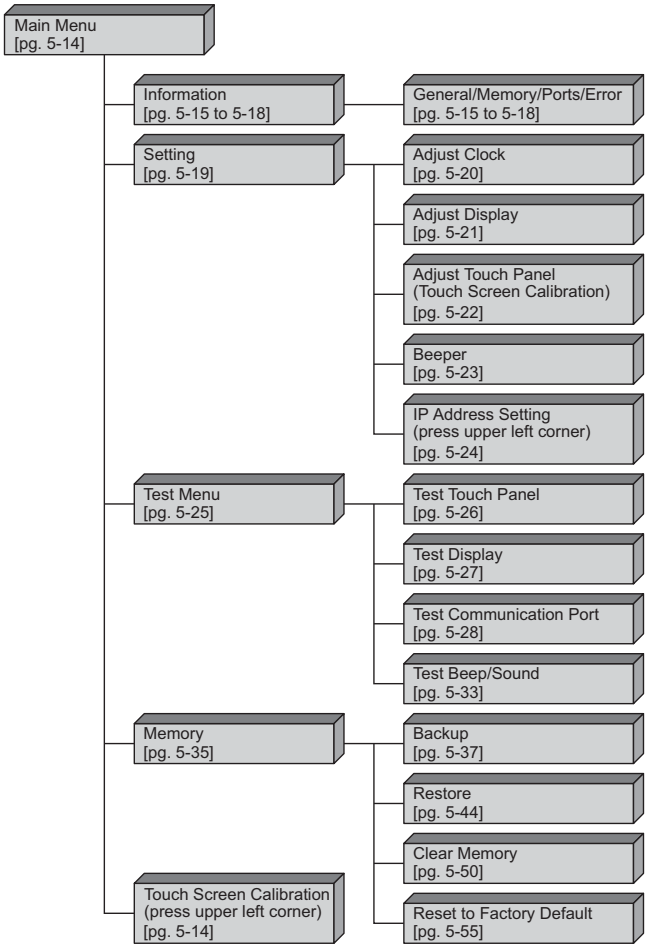

Accessing the System Setup Screens (no project loaded)

To access the **Main Menu** of the touch panel **System Setup Screens** prior to downloading a project, press the extreme upper left corner of the panel display area for 3 seconds as shown below. The **Main Menu** will then be displayed as shown below.

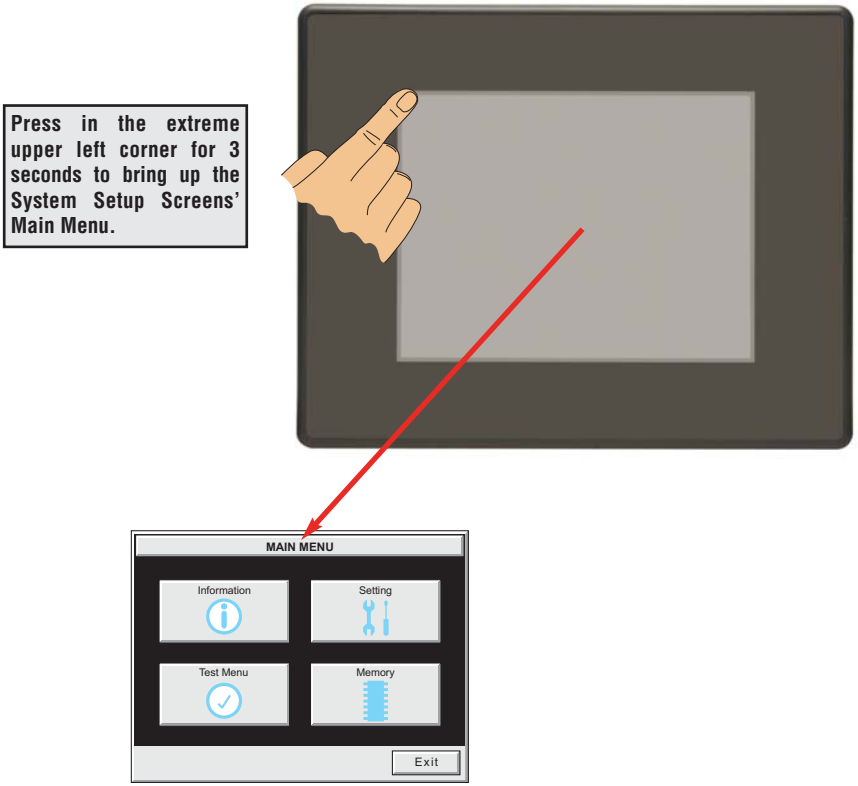

NOTE: *The ability to directly activate the* ***Main Menu*** *of the* ***System Setup Screens*** *by pressing the upper left corner of the touch panel for 3 seconds will only occur when there is no project loaded into the memory of the panel. Refer to the next section on accessing the* ***System Setup Screens*** *with a project loaded for procedure details and recommendations.*

Accessing the System Setup Screens (with project loaded)

To access the **Main Menu** of the touch panel **System Setup Screens** with a project loaded into memory, press the upper left corner of the panel display area for 3 seconds as shown below.

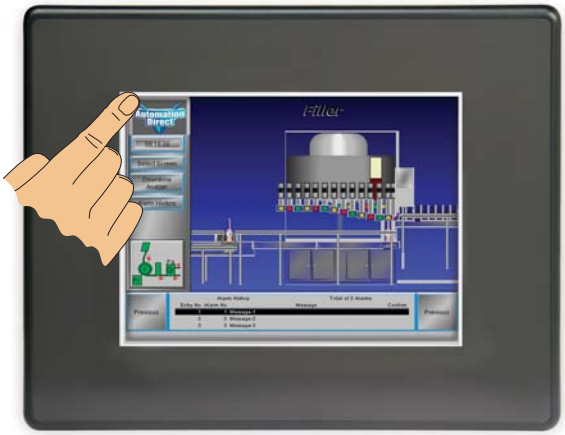

The following **WARNING** dialog box will appear on the the touch screen.

Dialog Box Actions:

- Pressing OK will display the system setup screen. See the WARNING below!
- Pressing Cancel will take you back to the project screen.
- Communications with the PLC is active while the Warning is displayed.
- The dialog box will close if no action is taken for 60 seconds.
- The dialog box will not display if the touch panel does not have a project loaded.
- The dialog box will not display if the System Screen password is enabled.

WARNING: Pressing OK at this point will STOP the PLC driver and therefore all communications between the touch panel and PLC will cease. It is strongly recommended that the password system tag "SYS SYSTEMSCREENPW" be enabled to add a safeguard step in accessing the system setup screens. See the next section for a quick overview for setting the System Tags in the Event Manager Database.

System Setup Screens (no password enabled)

If no password is enabled for the system setup screens, then pressing the **OK** button in the Warning dialog box will bring up the **Main Menu** as shown below. You can then proceed to the other system setup screens.

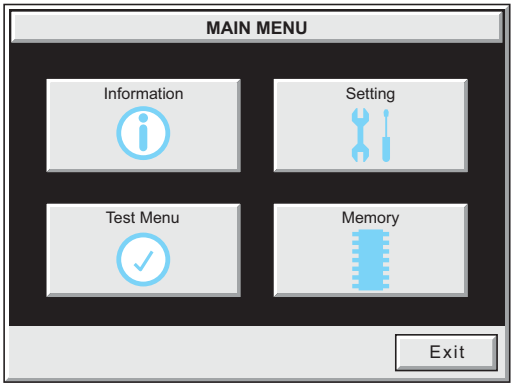

System Setup Screens (password enabled)

NOTE: *If the password system tag* ***SYS SYSTEMSCREENPW*** *is enabled, procedure described on the next page, then the* ***Enter Security Code*** *keypad shown below will be displayed. Entering the correct password code will then bring up the* ***Main Menu*** *system setup screen. If the wrong password code is entered, the keypad clear from its display the value entered and will stay present until the correct value is entered or the* ***Cancel*** *key is pressed.*

System Setup Screens – Enable Password in Software

Under the C-more Programming Software's **Navigation** window, select the **Function** tab, then select the Event Manager's **Database** function to display the **Event Manager Database** shown below:

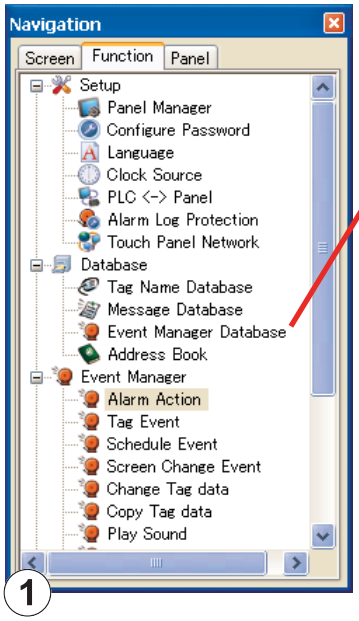

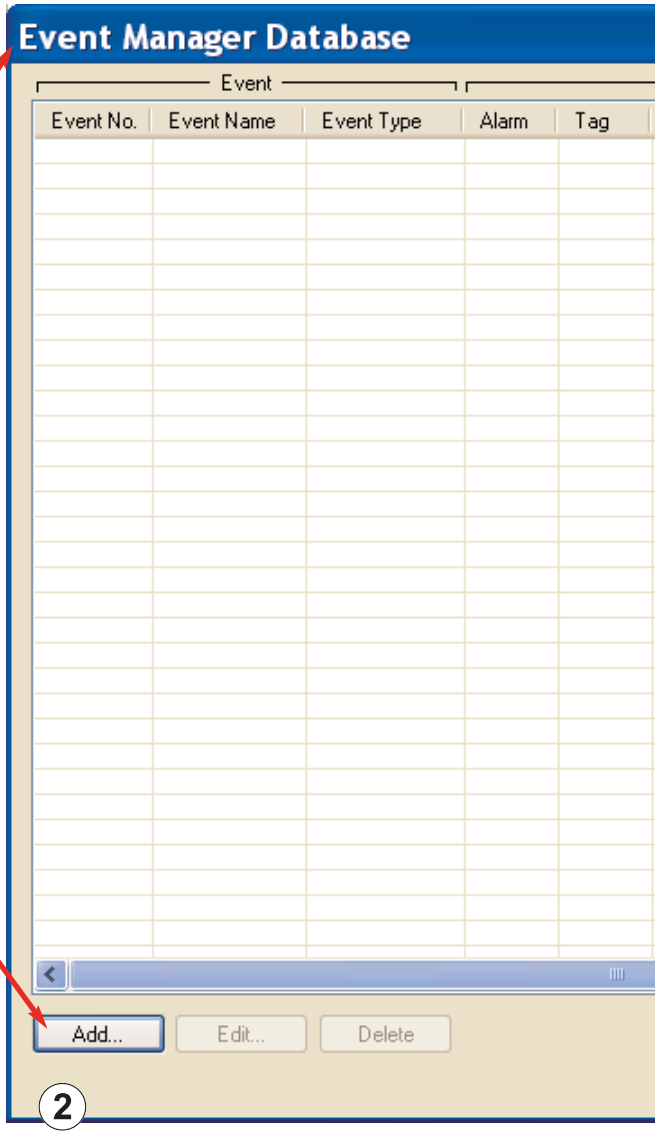

Click on the **Add** button to add an event to the database that will be used to enable the System Screen Password.

System Setup Screens – Enable Password (cont'd)

The **Event Add** dialog box will be displayed as shown next:

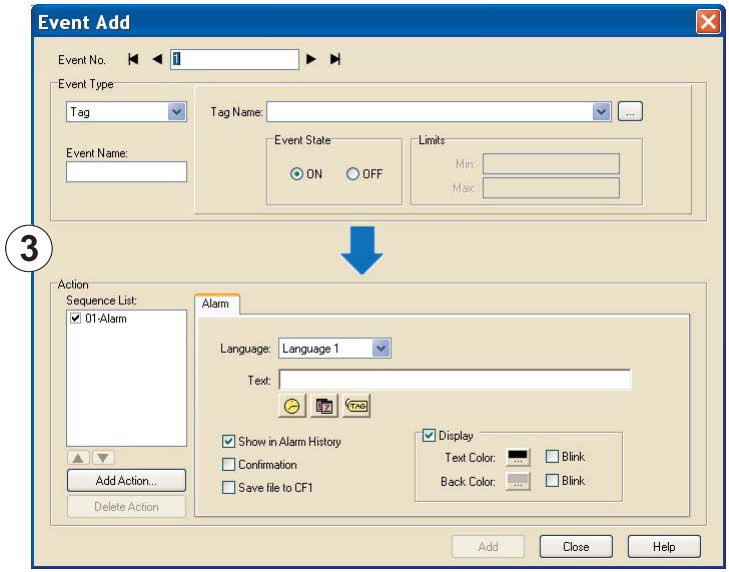

Click on the **Tag Name:** pull down menu and select the internal **System Bit On** (**SYS BIT ON**) tag as shown. This will force the tag event type to be continuously active.

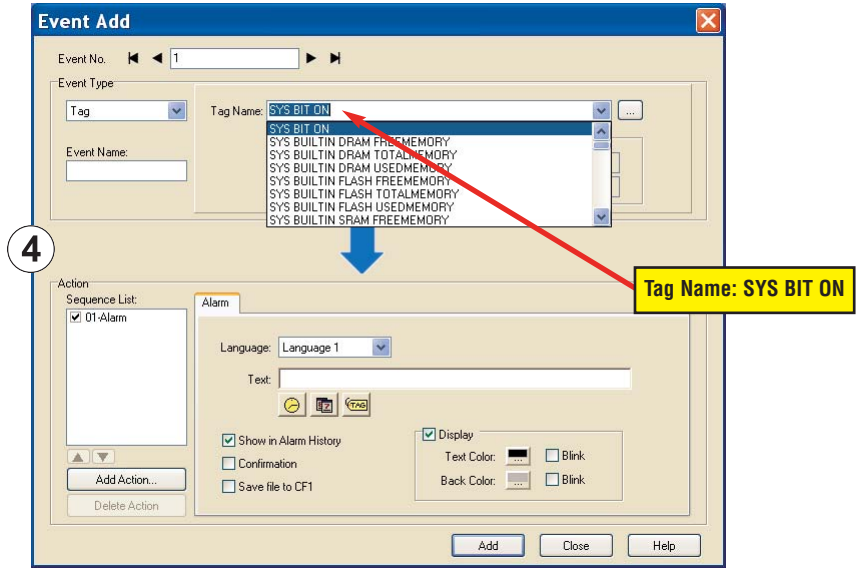

System Setup Screens – Enable Password (cont'd)

Use the **Event Name:** text box to document the event as "System Screen PW" for record keeping This is optional.

In the **Action** box, click once on the displayed **01-Alarm** under the **Sequence List:** so that **01-Alarm** is highlighted. Then click the **Delete Action** button to remove the **01-Alarm**.

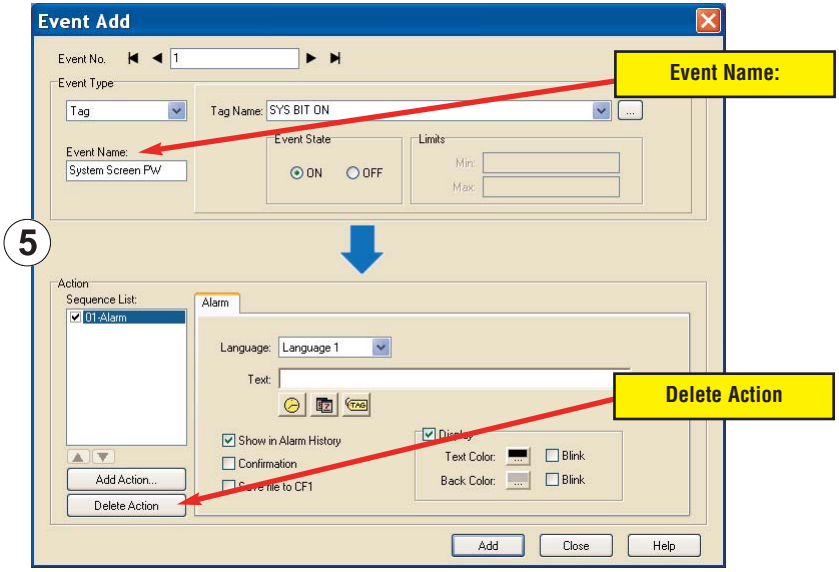

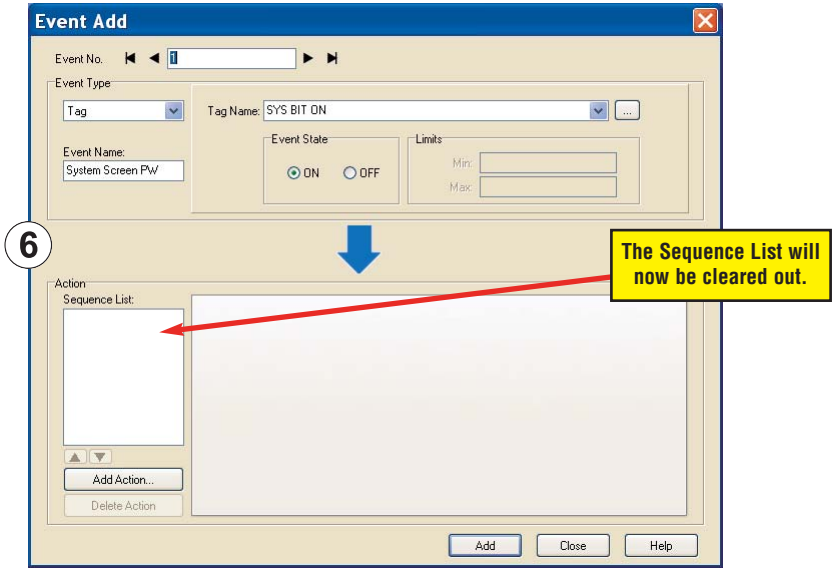

System Setup Screens – Enable Password (cont'd)

In the **Action** box, click on the **Add Action...** button. This will bring up the **Add Action** dialog box as shown below:

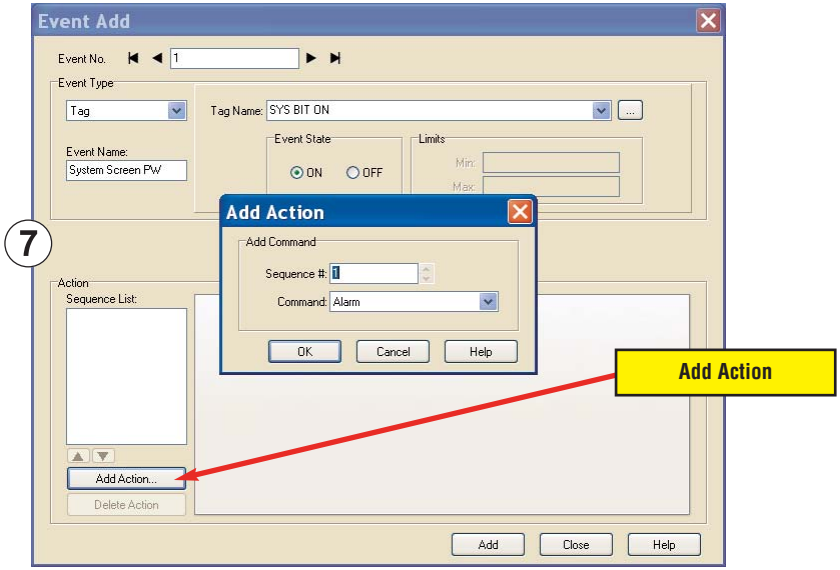

Click on the **Command:** pull down list in the **Add Command** box, select **Tag** from the list, then click **OK**.

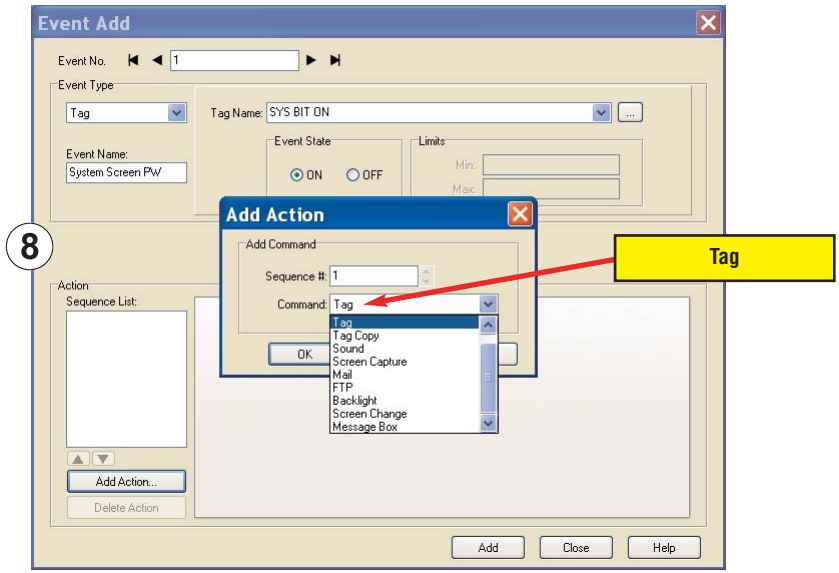

System Setup Screens – Enable Password (cont'd)

A **01-Tag** action item will then be added to the **Sequence List**.

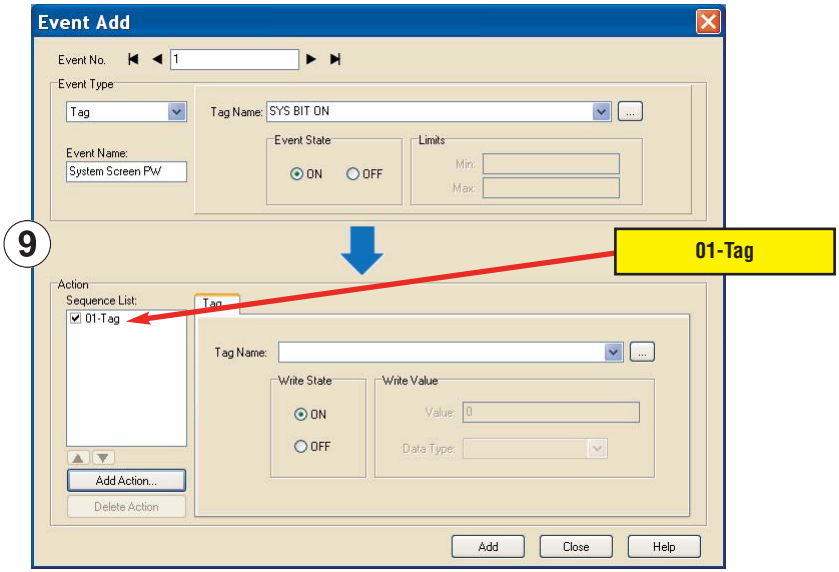

Click on the **Tag Name:** pull down list down arrow in the **Action** box's **Tag** tab, select **SYS SYSTEMSCREENPW** from the list, and click **OK**.

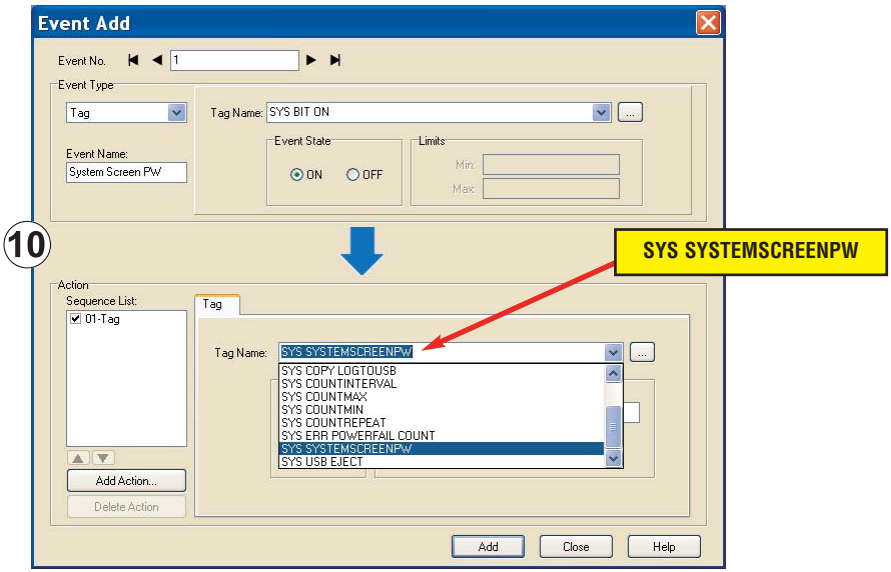

System Setup Screens – Enable Password (cont'd)

Enter a numeric value into the **Value:** box, such as "777". This value becomes the **Password** code to access the **System Setup Screen's Main Menu**.

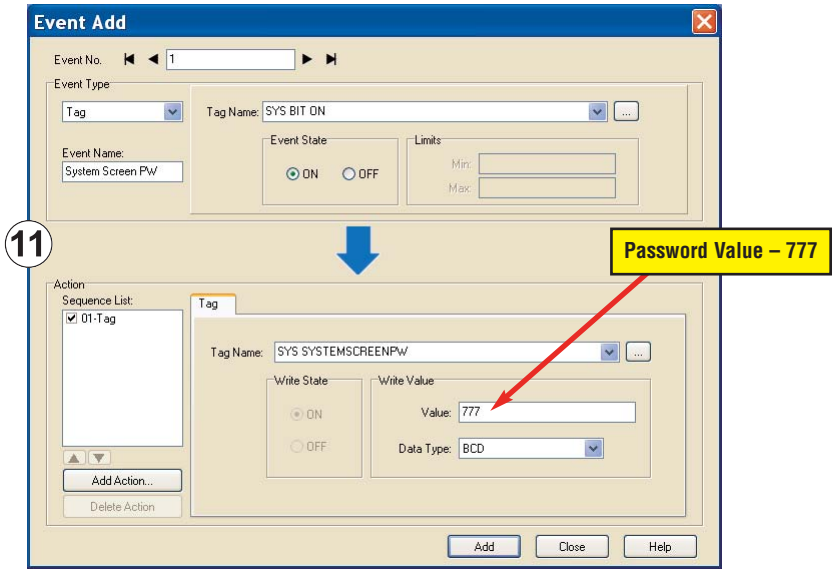

Click the **Add** button in the Event Add dialog box and then the **Close** button to return to the **Event Manager Database**. You now will see that the first event in the database is for the **System Screen Password** and it is enabled.

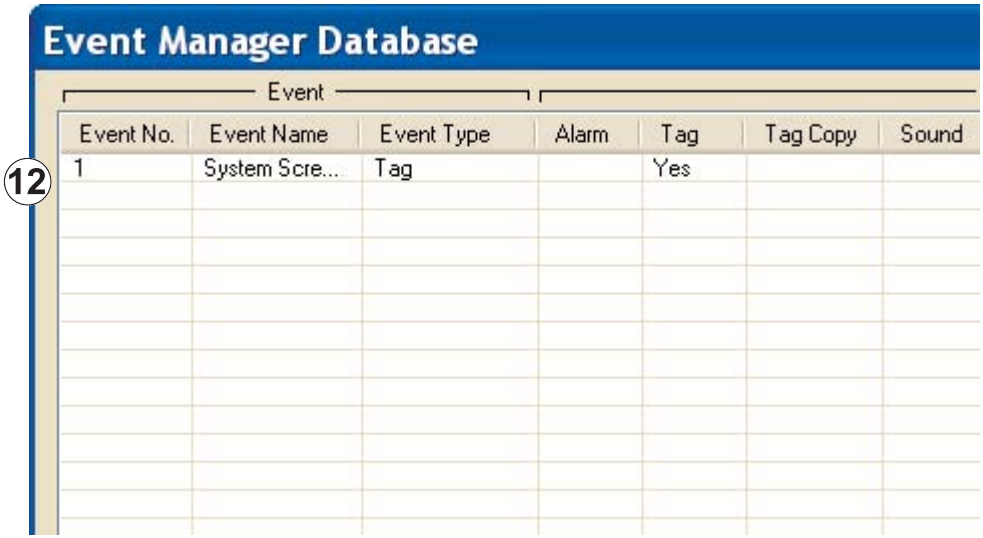

System Setup Screens Flowchart

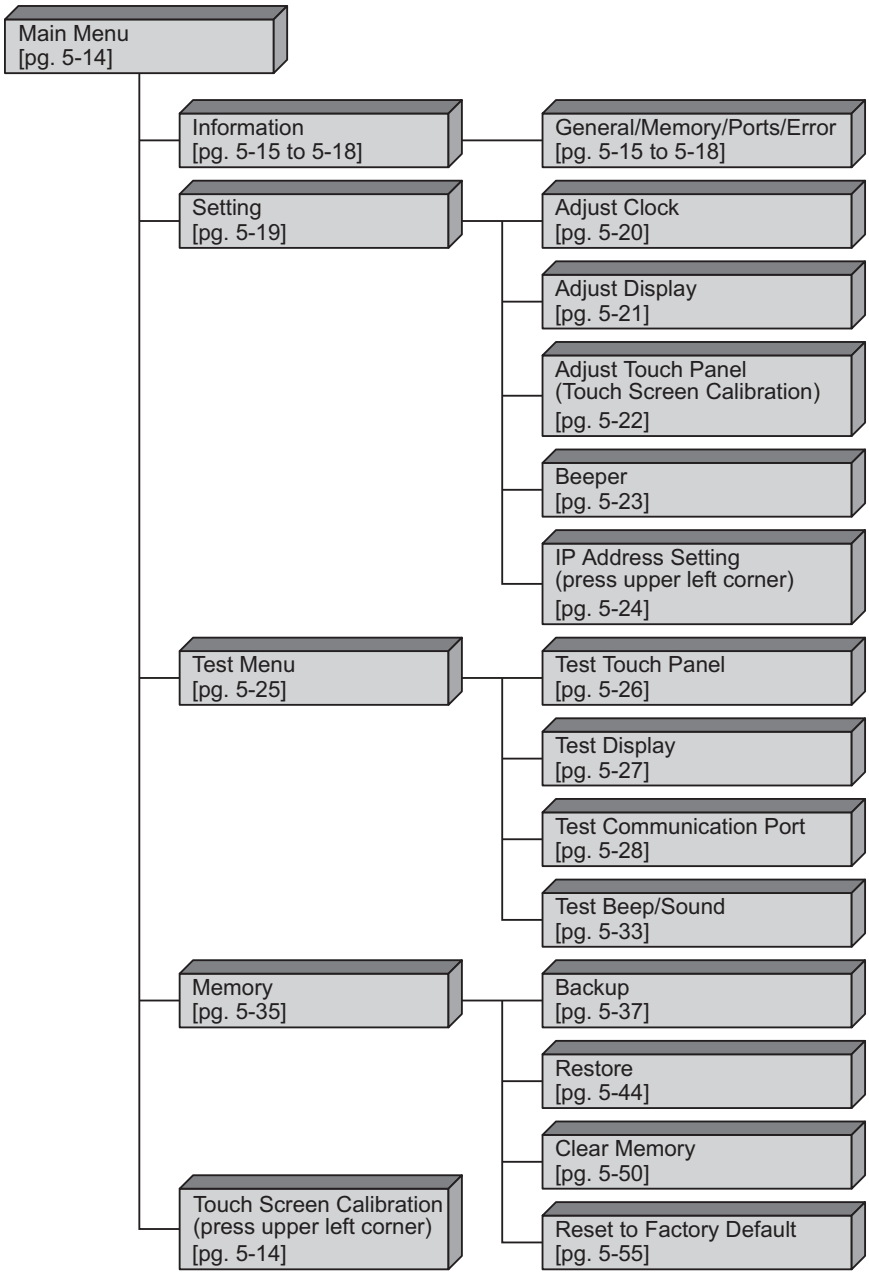

Main Menu

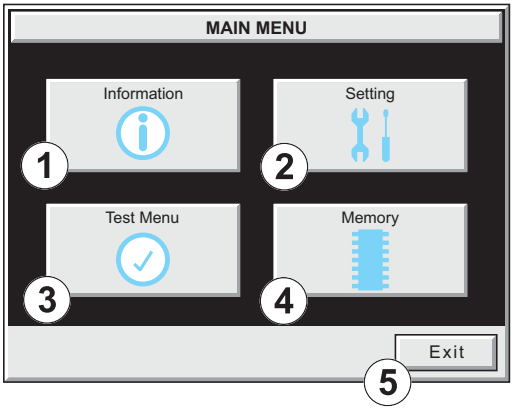

The **Main Menu** system setup screen is the top layer in the menu structure.

The menu is displayed at full screen on the 6 inch touch panel models. It is displayed in the center on the 8, 10, 12, or 15 inch models.

Item No.	Function	Description	Comment
1	**Information**	Press to go to the **Information Menu**.	
2	**Setting**	Press to go to the **Setting Menu**.	
3	**Test Menu**	Press to go to the **Test Menu**.	
4	**Memory**	Press to go to the **Memory Menu**.	
5	**Exit**	Press to return to the user screen.	
6	**Touch Screen Calibration**	While the **Main Menu** system setup screen is being displayed, the extreme upper left corner of the touch panel can be pressed for 3 seconds to access the **Touch Screen Calibration** display.	This feature is only used if the touch panel data becomes corrupted and touching the **Main Menu** buttons does not work. It allows a shortcut to the touch panel calibration screen.

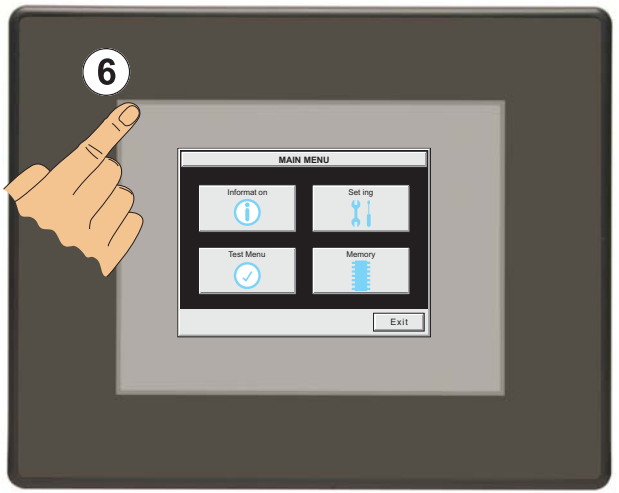

Information Menu – General tab

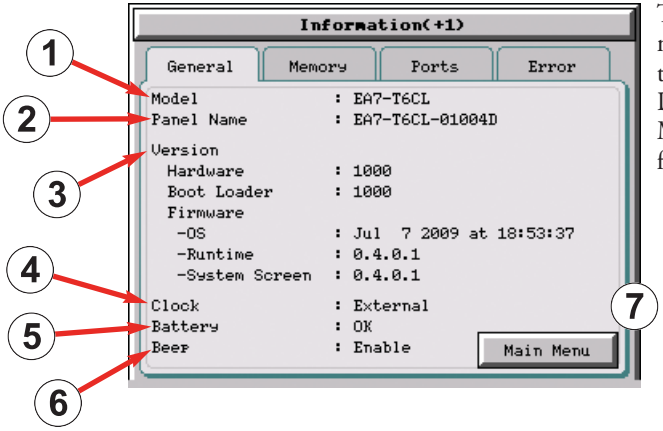

The **General** tab under the Information menu provides detailed information of the *C-more* Touch Panels model, Panel Default Name based on Model type and MAC address, hardware, boot loader and firmware versions, etc.

5

Item No.	Function	Description	Comments
1	**Model**	EA7-S6M-R, EA7-T6CL-R, EA7-S6C-R, EA7-S6M, EA7-T6CL, EA7-S6C, EA7-T6C EA7-T8C, EA7-T10C, EA7-T12C, EA7-T15C	
2	**Panel Default Name**	[Model Name]-01XXXX "01 XXXX" is the lower 3 bytes of the Mac Address MAX: 15 characters (15 bytes)	e.g. EA7-S6M-01004D This is the default name. The name can be changed in the ***C-more*** Programming Software.
3	**Version**	1.)Hardware: XXXX 2.)Boot loader: XXXX 3.)Firmware a) OS:Timestamp of NK.BIN file b) Runtime: X.X.X.X (Version of Runtime.EXE file) c) System Screen: X.X.X.X (Version of Panel.exe file)	Files reside in the ***C-more*** touch panel's memory.
4	**Clock**	Internal/External clock selection.	Configured in the ***C-more*** Programming Software.
5	**Battery**	Battery status, either **OK** or **Battery Low**.	
6	**Beep**	Enable/Disable the internal beeper.	Configurable in the **Setting Menu – Beeper** shown on page 5-23 or in the ***C-more*** Programming Software.
7	**Main Menu**	Press to return to the **Main Menu** screen.	**Main Menu** shown on page 5-14.

Information Menu – Memory tab

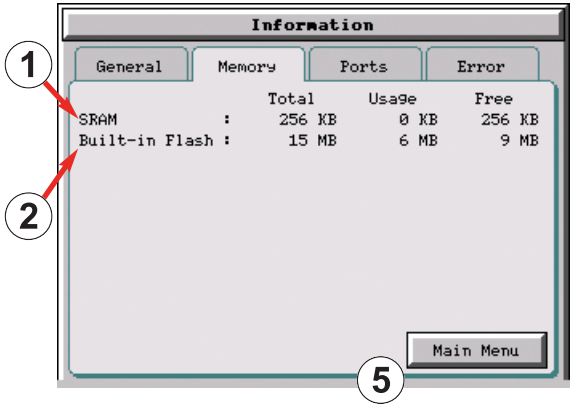

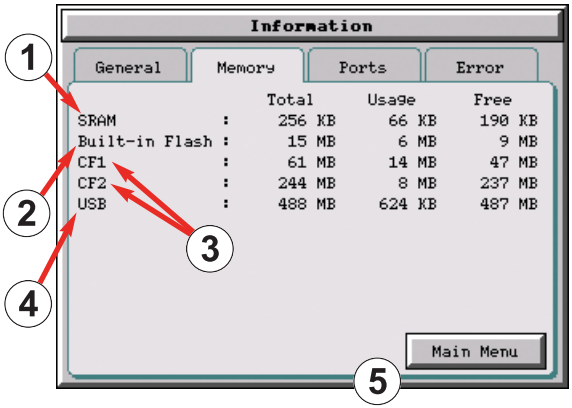

C-more Memory Organization

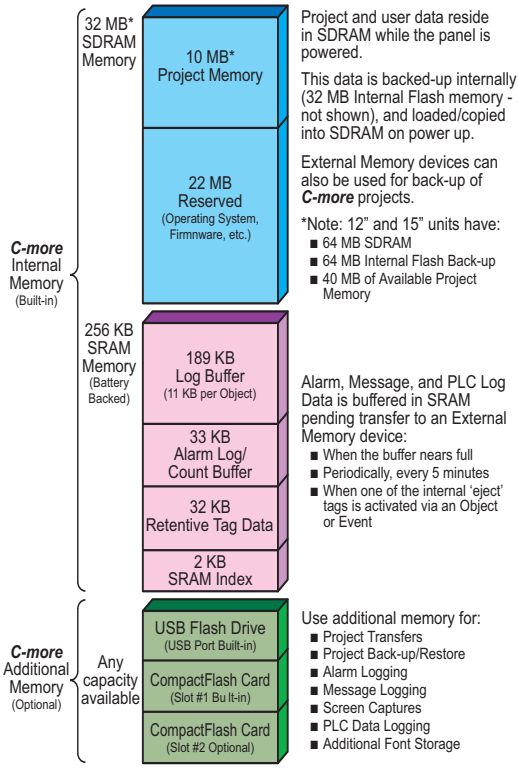

Item	Function	Description	Comment
1	**SRAM System Memory**	1.) Total: 2.) Usage: 3.) Free:	Size of unit displayed: 1.) KB When size is 1 to 999 bytes. It will be shown as 1KB. 2.) KB or MB 3.) MB or GB
2	**Built-in Flash Memory**	1.) Total: 2.) Usage: 3.) Free:	
3	**Expansion Memory 1.) CF1: 2.) CF2: (only visible when present)**	1.) Total: 2.) Usage: 3.) Free: Note: N/A - not available on base featured models (–R)	
4	**Expansion Memory 3.) USB: (only visible when present)**	1.) Total: 2.) Usage: 3.) Free:	
5	**Main Menu**	Press to return to the **Main Menu** screen.	

Information Menu – Ports tab

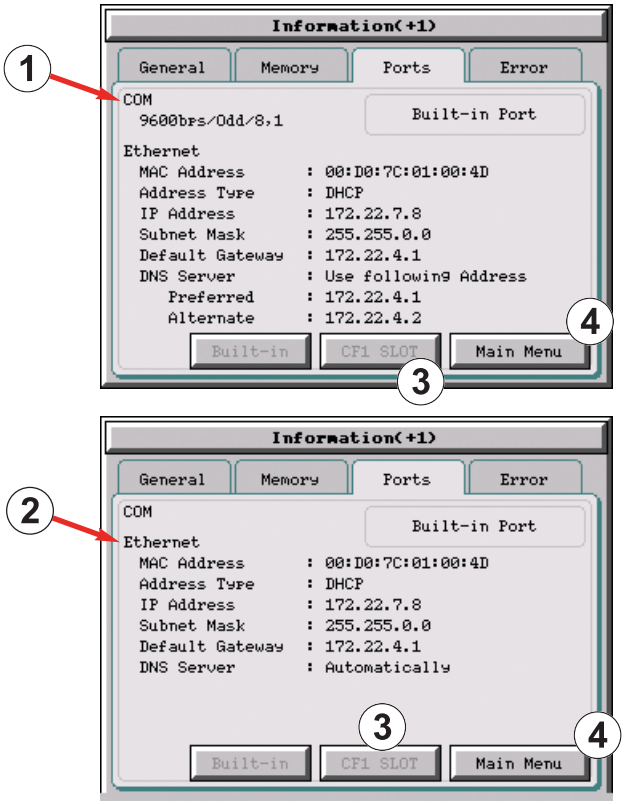

Item No.	Function	Description	Comment
1	**COM (Built-in Ports)**	PLC Serial Communications Port Settings: baud rate/party/data bit, stop bit	Configured in the ***C-more*** Programming Software.
2	**Ethernet (Built-in Ports)**	Ethernet Settings: MAC Address: 00 D0 7C 01 XX XX Address Type: DHCP/Static IP Address: Subnet Mask: Default Gateway: DNS: 1.) Automatically 2.) Use Designated Address Note: N/A - not available on base featured models (–R)	Configurable in the **Setting Menu – IP Address Setting** shown on page 5-24 or in the ***C-more*** Programming Software.
3	**Ethernet (CF1 Slot)**	Future	Future
4	**Main Menu**	Press to return to the **Main Menu** screen.	

Information Menu – Error tab

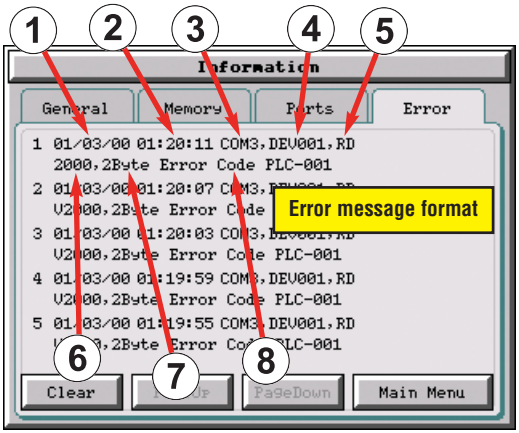

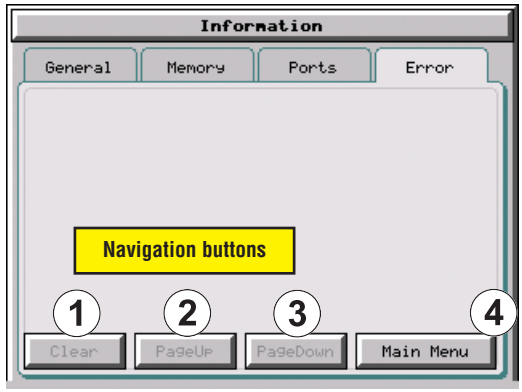

Error message format:

Item No.	Function	Description	Comment
Order of error message functions: **Error Number, Date, Time, Error Port, Device Name, Error Type, PLC Device, Access Bytes, Error Message**			
1	**Date**	Format: MM/DD/YY	Date error occurred.
2	**Time**	Format: HH/MM/SS	Time error occurred.
3	**Error Port**	PLC Serial Communications Port: Ethernet:	
4	**Device Name**	The assigned device name in the programming software.	Configurable in the ***C-more*** Programming Software Panel Manager
5	**Error Type**	RD: Read WT: Write	
6	**PLC Address**	The assigned address of the PLC that caused the error.	
7	**Access Bytes**	The number of access bytes.	
8	**Error Message**	The error message is the same as the message displayed in the upper left of the ***C-more*** touch panel's display.	A list of Error Massages is shown in Appendix A

Error message navigation buttons:

Item No.	Function	Description	Comment
1	**Clear**	Press to clear all error messages. This button is grayed out when there are no error messages to display.	
2	**Page Down**	Press to go to to the next page. This button is grayed out when there is no error messages on the next page.	
3	**Page Up**	Press to go to the previous page. This button is grayed out when there is no error messages on the previous page.	
4	**Main Menu**	Press to return to the **Main Menu** screen.	

Setting Menu

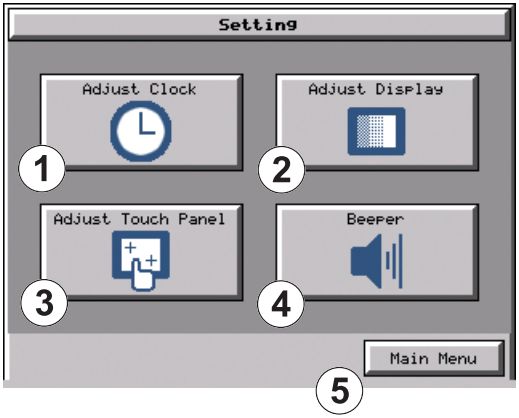

The **Setting Menu** is used to adjust the time & date, adjust the contrast or brightness of the display depending on which model is being used, adjust (calibrate) the touch screen, and enable or disable the internal beeper.

Item No.	Function	Description	Comments
1	**Adjust Clock**	Press to go to the **Adjust Clock** screen.	
2	**Adjust Display**	Press to go to the **Adjust Display** screen.	
3	**Adjust Touch Panel**	Press to go to the **Adjust Touch Panel** screen.	
4	**Beeper**	Press to go to the **Adjust Beeper** screen.	
5	**Main Menu**	Press to return to the **Main Menu** screen.	
6	**IP Address setting**	While the **Setting Menu** system setup screen is being displayed, the extreme upper left corner of the touch panel can be pressed for 3 seconds to access the IP Address setting screen.	The IP Address setting screen is only accessible form the **Setting Menu** screen as described. There is no direct button to call it from any of the setup screens. The IP Address can also be assigned in the ***C-more*** Programming Software.

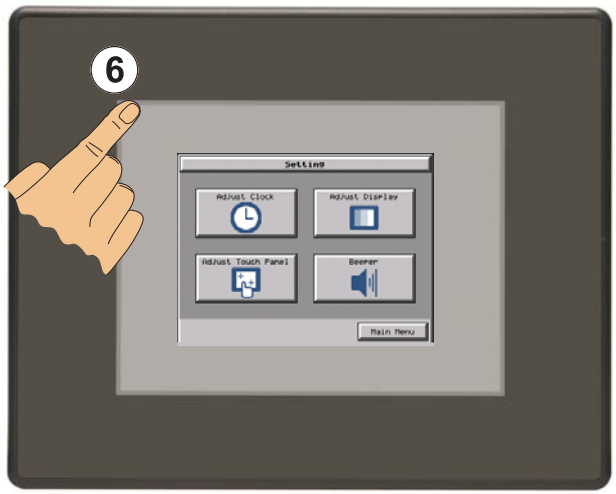

Setting – Adjust Clock

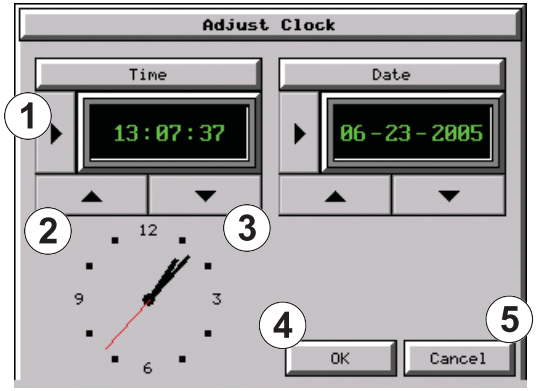

Color Touch Panel

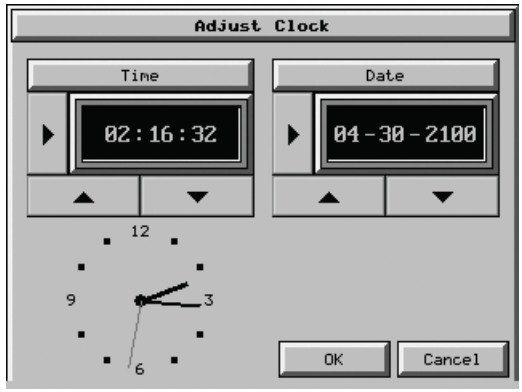

Grayscale Touch Panel

Item No.	Function	Description	Comments
1	**Select** ▶	**Time:** Each press of the **Select** button will cycle thru the following settings. 1.) No Selection to Hours 2.) Hours to Minutes 3.) Minutes to Seconds 4.) Seconds back to Hours **Date:** Each press of the **Select** button will cycle thru the following settings. 1.) Month to Day 2.) Day to Year 3.) Year back to Month	
2	**Up** ▲	Press to increment the value by "1" with each press.	
3	**Down** ▼	Press to decrement the value by "1" with each press.	
4	**OK**	Press to accept the changes.	
5	**Cancel**	Press to return to the **Setting Menu** screen without accepting the changes.	

NOTE: *The function buttons used to adjust the clock settings on the panel's setup screen are* ***disabled*** *if an* ***External*** *clock source is selected in the* ***C-more*** *programming software. The choice of an internal or external clock source is available by selecting* ***Clock Source*** *in the* ***C-more*** *programming software under the* ***Main Menu*** *drop down function* ***Setup.***

NOTE: *The panel's clock can also be adjusted from the* ***C-more*** *programming software. The* ***Adjust Clock*** *function can be accessed in the software by selecting* ***Adjust Clock*** *under the* ***Main Menu*** *drop down function* ***Panel*** *or selecting* ***Adjust Clock*** *under the* ***Panel*** *tab in the software's* ***Navigation*** *window.*

Setting – Adjust Display

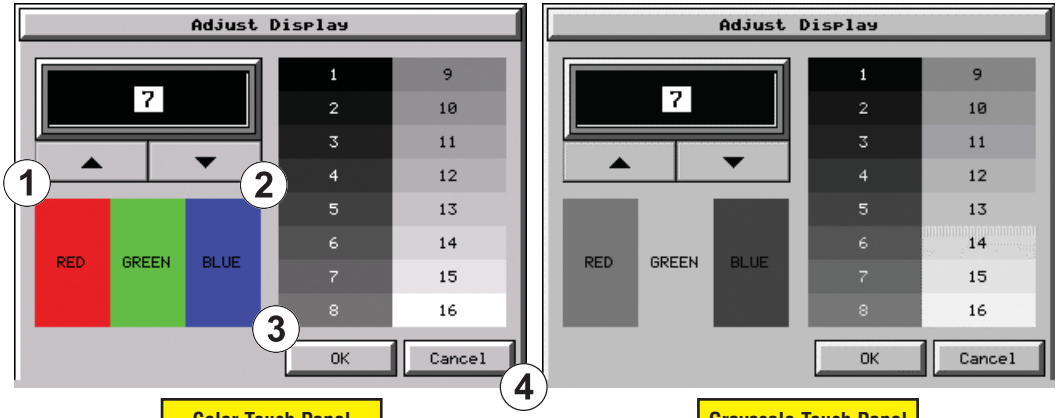

Color Touch Panel

Grayscale Touch Panel

Item No.	Function	Description	Comments
The STN type display models can have the contrast adjusted. The TFT type display models can have the brightness adjusted. See the table below.			
1	Up ▲	Press to increment the value by "1" with each press.	
2	Down ▼	Press to decrement the value by "1" with each press.	
3	OK	Press to accept the changes.	
4	Cancel	Press to return to the **Setting Menu** screen without accepting the changes.	

Model	Selection Range		Default	
	Brightness	Contrast	Brightness	Contrast
TFT Models: EA7-T6CL-R, EA7-T6CL, EA7-T6C EA7-T8C, EA7-T10C, EA7-T12C & EA7-T15C	1 to 7	N/A	7	N/A
STN Grayscale: EA7-S6M-R & EA7-S6M STN Color: EA7-S6C-R EA7-S6C	N/A	1 to 7	N/A	6

Setting – Touch Screen Calibration

This procedure is used to calibrate the touch screen to ensure accuracy of the touch areas. There are five points on the touch screen that the calibration is based around. The adjustment relies on very narrow areas for the calibration points.

NOTE: *The panel will display the Touch Screen Calibration window on power up until the calibration procedure is completed and saved.*

Item No.	Function	Description	Comment
1	**Points 1a thru 1e**	The touch screen calibration crosshairs will appear individually in the order of point 1a thru 1e respectively as each proceeding crosshair is pressed.	If the touched co-ordinate point is too far off from normal, then the procedure will return to Point 1a.
2	**Cancel**	Press to return to the **Setting Menu** screen without accepting the changes.	
3	**Press here to save & quit.**	Press to accept the changes and return to the **Setting Menu** screen.	If you do not save, you will have to calibrate the panel again after the next power cycle.
4	**Press here to retry.**	The current adjustment data is canceled and the procedure is returned to point 1a.	

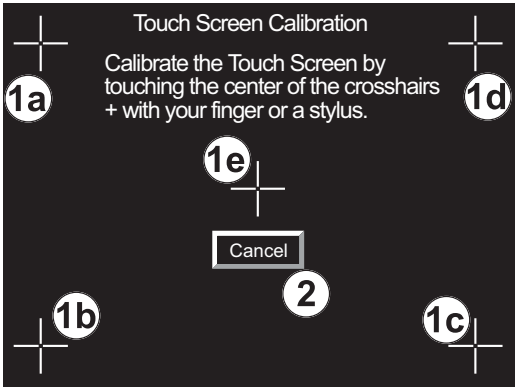

Points 1a thru 1e

Final

Setting – Beeper

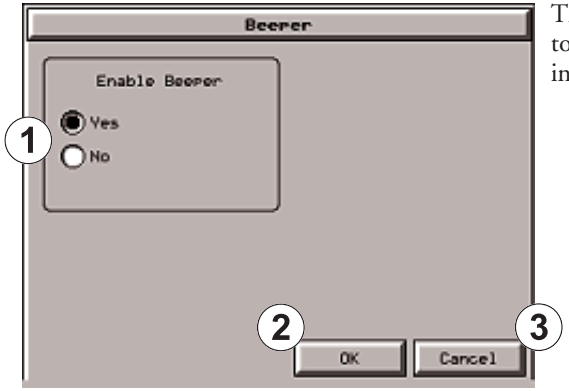

This system setup screen function is used to enable or disable the touch panel's internal beeper.

Item No.	Function	Description	Comments
1	**Yes**	Change Enable to Beeper.	
2	**No**	Change Disable to Beeper.	
3	**OK**	Press to accept the changes and return to the **Setting Menu** screen.	
4	**Cancel**	Press to return to the **Setting Menu** screen without accepting the changes.	

NOTE: *The project settings in the* ***C-more*** *programming software* ***Panel Manager*** *will override the touch panel's internal setting upon initial download.*

Setting – IP Address Setting

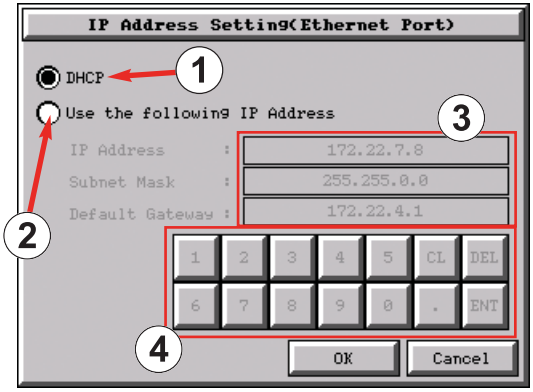

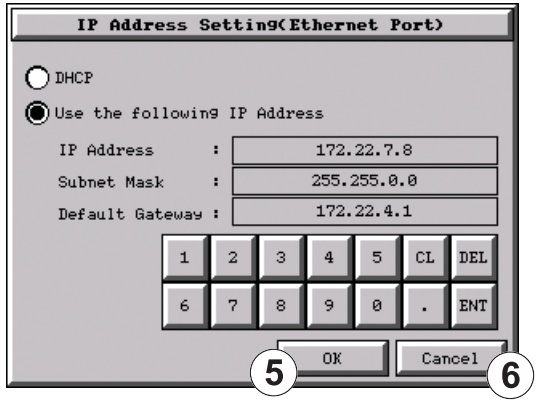

Item No.	Function	Description	Comment
1	**DHCP**	"DHCP" is enabled as the default when this system setup screen is first selected. All of the other selections on this screen are dimmed when "DHCP" is selected and are not available.	
2	**IP Address**	The "Use the following IP Address" setting is selected when its radio button is pressed. An IP Address can be assigned as follows: 1.) Select the address type: a.) IP Address b.) Subnet Mask c.) Default Gateway 2.) Use the numerical keypad to input the address. Use the decimal key to enter the dot separator. 3.) Press the **"ENT"** key when finished with each field.	Note: If an Ethernet cable is not connected to the touch panel from an active Ethernet device, then the IP Address will show as 0.0.0.0.
3	**IP Address** **Subnet Mask** **Default Gateway**	Select the field that needs to be assigned by touching the entry value and use the keypad to enter the desired address.	Each field can be independently assigned.
4	**Keypad**	The keypad is used to enter the Address: Use the numeric keys and the **"dot"** key to enter the address, e.g: 192.168.10.1 **"ENT"** = Enter key sets value **"CL"** = Clear value entered **"DEL"** = Delete 1 character with each press	The **"ENT"** key must be pressed to accept the entry. If the **"ENT"** key is not pressed, then the previous value will remain when another area is selected or the **"Cancel"** key is pressed.
5	**OK**	Press to accept the changes and return to the **Setting Menu** screen.	
6	**Cancel**	Press to return to the **Setting Menu** screen without accepting the changes.	

Test Menu

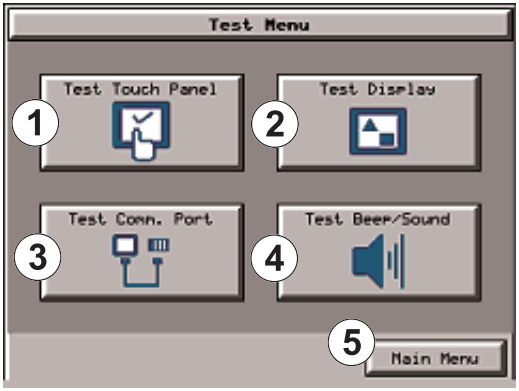

The **Test Menu** gives the user the ability to test the operation of the touch screen, test the LCD display, test the various communication ports, and also test the internal beeper and the audio line out through an user supplied amplified (stereo) speaker(s).

Item No.	Function	Description	Comments
1	**Test Touch Panel**	Press to go to the **Test Touch Panel** screen.	
2	**Test Display**	Press to go to the **Test Display** screen.	
3	**Test Communication Port**	Press to go to the **Test Communication Port** screen.	
4	**Test Beep/Sound**	Press to go to the **Test Beep/Sound** screen.	
5	**Main Menu**	Press to return to the **Main Menu** screen.	

Test Menu – Test Touch Panel

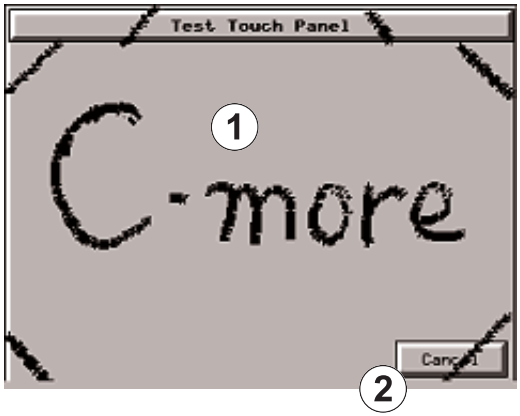

Using this test, normal or unusual operation of the analog touch panel can be determined.

Testing:

If an area of the touch screen is suspected to be inoperable, touch that area of the screen while in the **Test Touch Panel** screen mode. The screen pixels should turn black in that area. If the screen pixels do not turn black when touched, then the touch screen is defective or needs to be calibrated. See **Setting - Adjust Touch Screen** on page 5-22.

Item No.	Function	Description	Comments
1	**Touch area**	Display Size / Touch Area 6 Inch / 320 X 240 8/10 Inch / 640 X 480 12 Inch / 800 X 600 15 Inch / 1024 X 768	Both the title bar (Test Touch Panel) and **Cancel** button can be drawn across to test the touch operation.
2	**Cancel**	Press to return to the **Test Menu** screen.	

Test Menu – Test Display

There are two different test patterns that may be run on the LCD display to allow the user to check for display screen defects. If the screen is **not** touched within 3 seconds of **Test Pattern 1** being displayed, then **Test Pattern 2** will be displayed until the screen is touched, otherwise **Test Pattern 1** will remain until cancelled.

Test Pattern 1 displays a test pattern of 16 grayscale graduations and RGB colors.

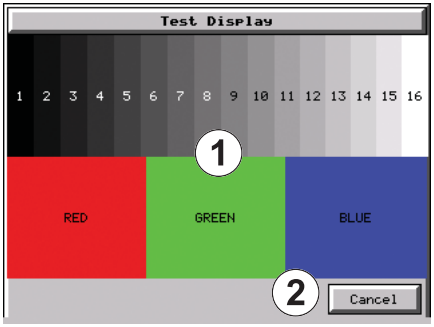

Test Pattern 2 will follow the pattern as shown in the following chart with the color wiping across the screen in the direction indicated by the arrows, then repeats:

3

Color	1st Time	2nd Time	3rd Time	4th Time
RED	→	↑	↓	←
GREEN	←	→	↑	↓
BLUE	↓	←	→	↑

Item No.	Function	Description	Comments
1	**Touch the Test Display screen.**	Press the screen anywhere except the **Cancel** button and the shown **Test Pattern 1** remains.	If the **Test Display** screen is not touched, then in three seconds the display will move to **Test Pattern 2**.
2	**Cancel (Test Pattern 1)**	Press to return to the **Test Menu** screen.	
3	**Touch Anywhere (Test Pattern 2)**	Touch the sceen anywhere during **Test Pattern 2** and return to the **Test Menu** screen.	

Test Results: If any pixels on the screen do not appear the same color as the surrounding pixels, the LCD screen may be defective. A single pixel gone bad is relatively common. Surrounding pixels going bad over time is another indication the LCD screen may be defective.

Test Menu – Test Communication Ports: Serial

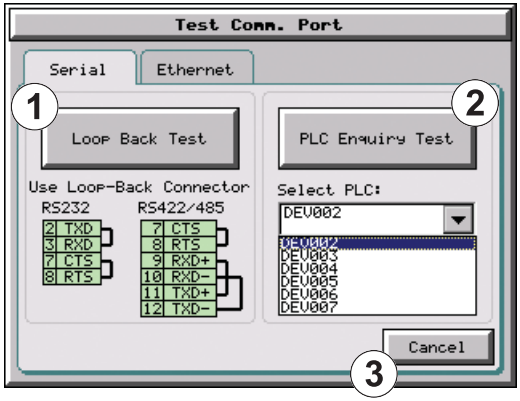

The following test can be used to check the operation of the serial communication port, with the use of a loop back connector and can also check the status of the serial communications to any connected and configured PLC.

Continued on the next two pages.

Item No.	Function	Description	Comments
1	**Loop Back Test**	This function checks the serial comm port for proper operation with a loop back connector.	
2	**PLC Enquiry Test**	This function allows the ability to select any PLC that that may be connected to the touch panel via a serial connection and checks to see if the communications are working correctly.	Note: The PLC serial communications port settings must be configured in the ***C-more*** programming software.
3	**Cancel**	Press to return to the **Test Menu** screen.	

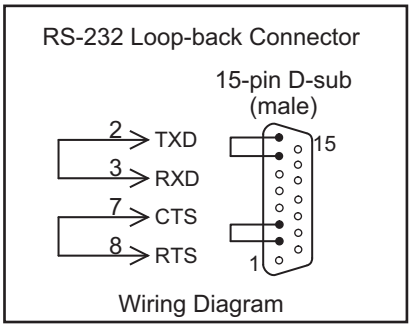

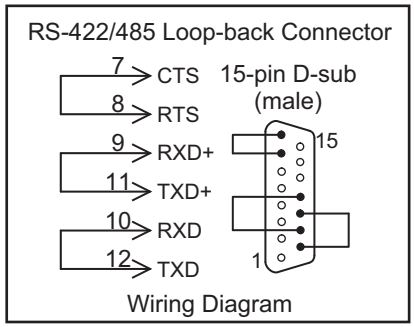

Test Menu – Serial Port Test

PLC Serial Comm Port – Loop Back Test

Item No.	Function	Description	Comments
1	**Determine Loop Back Connector**	1.) When testing an RS-232C serial connection, connect pin 2 to 3 and pin 7 to 8 on an appropriate D-SUB 15-pin male connector and plug it into the serial PLC comm port on the rear of the touch panel. 2.) When testing an RS-422 or RS-485 serial connection, connect pin 9 to 11, pin 10 to 12 and pin 7 to 8 on an appropriate D-SUB 15-pin male connector and plug it into the serial PLC comm port on the rear of the touch panel.	
2	**Start Test**	Press the **Loop Back Test** button to start the serial comm port test.	
3	**Test Results**	1.) Bytes Sent: The number of bytes sent after a test is started. 2.) Receive Counts: The number of bytes which are received after the test is started. 3.) Error Counts: The number of bytes which have not been received after the test is started. 4.) RTS/CTS Test: Pass/Fail RTS is turned on and if CTS receives the signal then the test shows “Pass”, otherwise the test shows “Fail”.	Note: The test will continue to run until the **Cancel** button is pressed. If there are any error counts, check the loop back connector. If it is OK, call Tech Support.
4	**Cancel**	Press to return to the **Test Comm. Port** screen.	

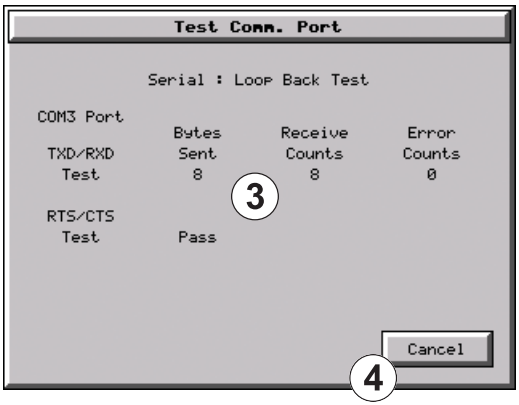

Test Menu – PLC Enquiry Test: Serial Connection

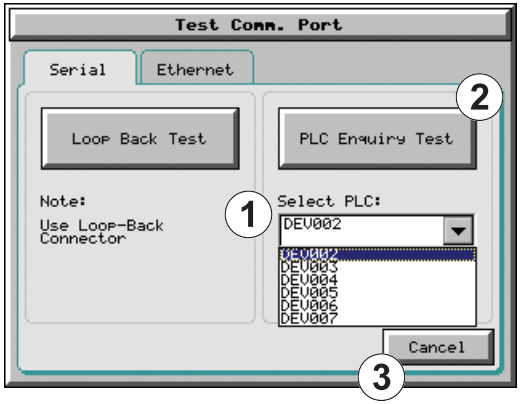

This function allows the ability to select any PLC that may be connected to the touch panel through a serial comm. port connection and checks to see if the communications are working correctly.

Note: *The communications protocol for the PLC being selected must be configured the same as the* ***C-more*** *touch panel. The touch panel's PLC serial communications are configured using the* ***C-more*** *Programming Software's Panel Manager.*

Item No.	Function	Description	Comments
1	**Select PLC**	Select any PLC that is shown in the drop down menu. The PLC selected will connect to the touch panel at the time of a test.	Only PLC's that have been configured in the ***C-more*** Programming Software will appear in the **Select PLC:** list.
2	**PLC Enquiry Test**	Four test read packets are sent to the selected PLC. Test result will be either Pass or Fail.	
3	**Cancel**	Press to return to the **Test Menu** screen.	

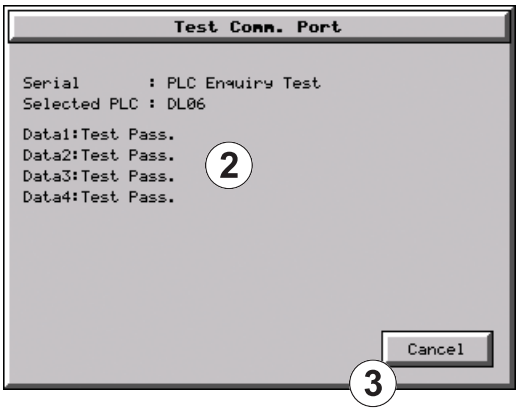

Test Menu – Test Communication Ports: Ethernet

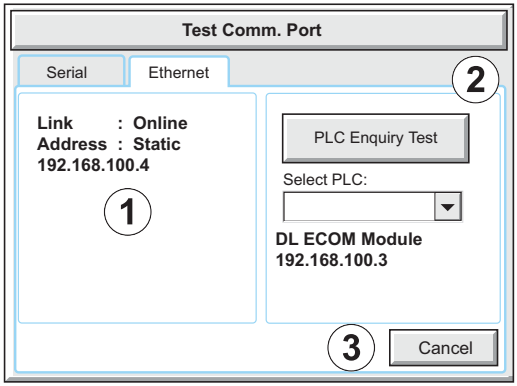

The following test feature can be used to check the operation of the Ethernet communication port by indicating if an Ethernet link has been established or not, and can also check the status of the Ethernet communications to any connected PLC.

Base featured models (-R) do not include an Ethernet port, therefore this check is not displayed.

Note: *The communications protocol for the PLC being selected must be configured the same as the* ***C-more*** *touch panel. The touch panel's PLC Ethernet communications are configured using the* ***C-more*** *Programming Software's Panel Manager.*

5

Item No.	Function	Description	Comments
1	**Ethernet Connected**	This area displays information to whether an Ethernet link has been established for the touch panel's Ethernet comm port or not. Displays panel's IP address and shows whether it is static or assigned by a DHCP server.	
2	**PLC Enquiry Test**	This function allows the ability to select any PLC configured in the project that may be connected to the touch panel via an Ethernet connection and checks to see if the communications are working correctly.	
3	**Cancel**	Press to return to the **Test Menu** screen.	

Example of displayed message when the touch panel's Ethernet port is not connected.

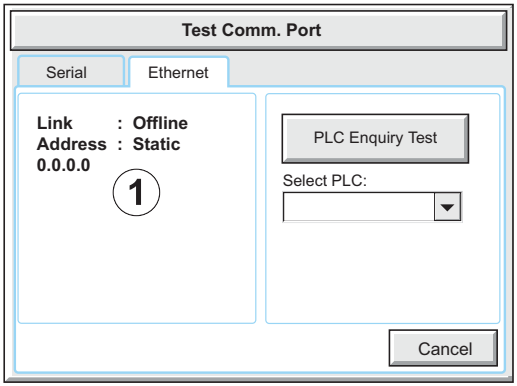

Typical Ethernet connection with Ethernet switch.

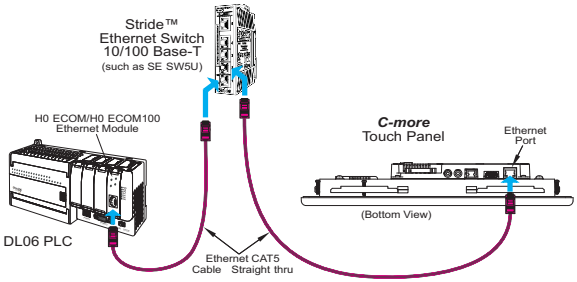

Test Menu – PLC Enquiry Test: Ethernet Connection

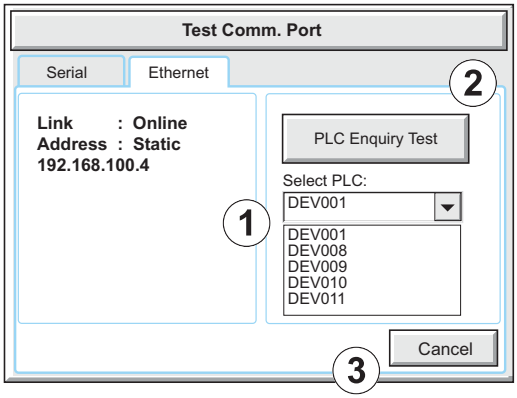

This function allows the ability to select any PLC configured in the project that may be connected to the touch panel through an Ethernet port connection and checks to see if the communications are working correctly.

Note: *The communications protocol for the PLC being selected must be configured the same as the* ***C-more*** *touch panel. The touch panel's PLC Ethernet communications are configured using the* ***C-more*** *Programming Software's Panel Manager.*

Item No.	Function	Description	Comments
1	**Select PLC**	Select any PLC that is shown in the drop down menu.	
2	**PLC Enquiry Test**	The following are the steps that the **Ethernet PLC Enquiry Test** performs: 1.) Ping the network 4 times for the PLC selected. 2.) Four of the test read packets are sent to the selected PLC. Test result will be either Pass or Fail. However, if the result of pinging the network shows an error, the test is stopped.	
3	**Cancel**	Press to return to the **Test Menu** screen.	

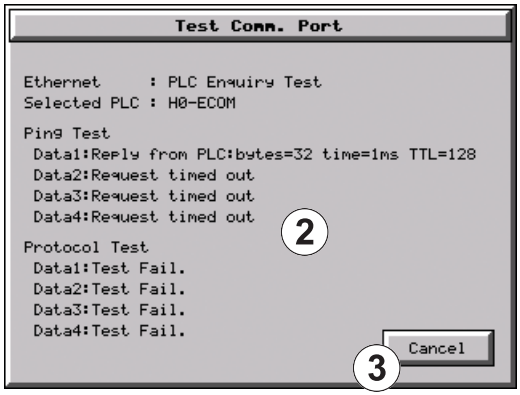

Test Menu – Test Beep/Sound

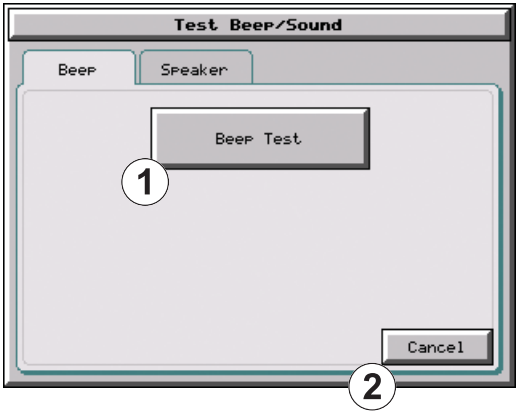

Item No.	Function	Description	Comments
1	**Beep Test**	The internal Beeper can be tested from this system setup screen whether the Beeper is enabled or disabled. After the **Beep Test** button is pressed then released, the Beeper will sound for 500 msec.	
2	**Cancel**	Press to return to the **Test Menu** screen.	

Test Menu – Test Beep/Sound (cont'd)

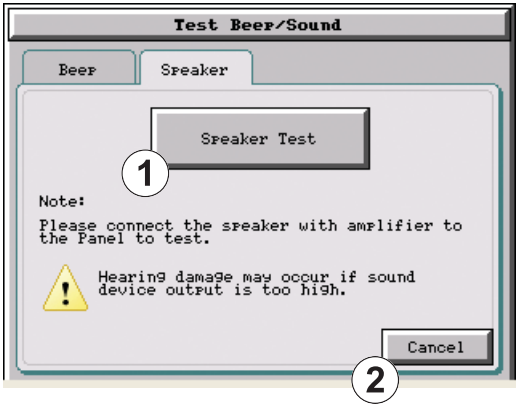

WARNING: Hearing damage may occur if the volume on the user supplied external amplified speaker is set too high.

Item No.	Function	Description	Comments
1	**Speaker Test**	The **Speaker Test** function requires that a speaker(s) with an amplifier (can be stereo) be connected to the Audio Line Out stereo jack on the rear of the touch panel. After the **Speaker Test** button is pressed then released, a system provided Test.WAV file will play once.	
2	**Cancel**	Press to return to the **Test Menu** screen.	

Memory Menu

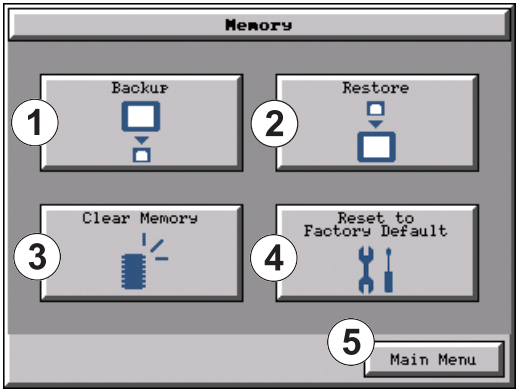

The user's project, system, log and recipes files can be backed up and restored to either a CompactFlash memory card (CF1 or CF2), or a USB memory device. From this menu the user can also clear the project log files. The user also has the ability to clear the memory within the *C-more* touch panel.

Base featured models (-R) do not include CF1 or CF2.

5

Item No.	Function	Description	Comments
1	**Backup**	Backup project, system, log & recipe files to the following memory devices: USB port - Type A: USB pen drive CF Slot #1 (standard port): CompactFlash CF Slot #2 (optional port): CompactFlash See page 5-37 for details.	Any USB pen drive or CompactFlash memory device capacity available is supported. The backup data files are created and copied to a folder on the memory device named "EA_Memory Copy." The project file is named StartupStorage.eas "Log" and "Recipe" folders with the appropriate data files are also created on the memory device.
2	**Restore**	Restore project, system, log & recipe files to the internal memory from one of the following memory devices: USB port - Type A: USB pen drive CF Slot #1 (standard port): CompactFlash CF Slot #2 (optional port): CompactFlash See page 5-44 for details.	A folder on the memory device named "EA_Memory Copy" must exist containing a file named "StartupStorage.eas". The project data file is stored in this file, and if the system data file was backed up, it also will be stored in this file. Any backed up log or recipe data files will be located under the appropriate "Log" or "Recipe" folders.
3	**Clear Memory**	Clear selected data files from the memory of the following internal memory or external memory devices: Built-in FLASH Memory USB port - Type A: USB pen drive CF Slot #1 (standard port): CompactFlash CF Slot #2 (optional port): CompactFlash See page 5-50 for details.	Can only clear project, log and recipe data files of the Built-in FLASH memory. Can clear entire contents or individual data files of external memory devices.
4	**Reset to Factory Default**	The touch panel's internal memory is set to the original factory defaults.	Clears all project memory.
5	**Main Menu**	Press to return to the **Main Menu** screen.	

Project Executed from CompactFlash (CF Slot #1)

If a CompactFlash card is located in the CF1 slot at the time a project is transferred to the panel, the project will be stored on the CompactFlash card, not in the internal Built-in FLASH memory.

If CF1 slot contains a CompactFlash with a project and:

1.) The touch panel's power is cycled, then

2.) The project file stored on the CompactFlash is loaded into the touch panel's internal DRAM memory and executed. Please note that the project stored in the panel's internal FLASH memory is NOT loaded into the internal DRAM memory when a CompactFlash memory card is present. Any project in the internal FLASH memory is cleared.

WARNING: During power up with a CompactFlash plugged into the CF1 Slot, please do not remove the memory card from the slot. Damage to the CompactFlash and possibly the touch panel may result.

WARNING: After a firmware update, the project files which are located in either the touch panel's internal FLASH memory or the CompactFlash plugged into CF1 Slot are cleared. The programming software will need to be used to Transfer the project file back into the panel. If you wish to retain the project on the CompactFlash, power down the panel and remove the CompactFlash before performing a firmware upgrade.

Increasing Project Memory Size using a CompactFlash in CF1 Slot:

If a project is transferred to the panel with a CompactFlash card in CF1 Slot, the Font and Recipe data files are not included in the 10MB (40MB for 12" and 15" models) project size. Therefore using CF1 can allow a project to be loaded that is larger than 10MB if the excessive size is caused by Fonts and/or Recipe Sheets.

Memory – Backup

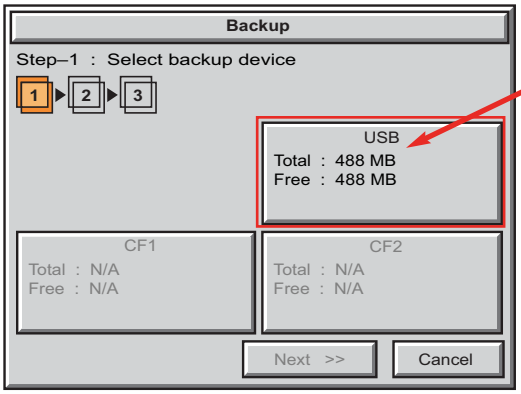

The **Memory - Backup** selection allows you to backup the panel's **Project**, **Log** files, **Recipe** files or even the **System** (firmware & OS) files to either a CompactFlash (**CF**) or **USB** pen drive. The available memory devices will be displayed showing the total and free available memory for that device. If the device is not available, it will be grayed out. The **Next** button is grayed out until a device is selected.

The **Cancel** button can be pressed at any time to return to the **Memory Menu** screen.

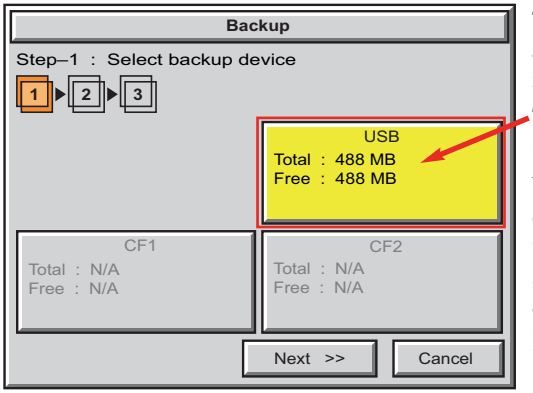

This is an example of a USB memory device selected to be used for backing up the panel's data file(s).

The selected device is highlighted. Pressing again un-selects it.

When there are more than two available backup devices, the one selected will be highlighted. If there is only one available memory device, it still needs to be highlighted in order to go to the next step.

Press the **Next** button to continue to Step 2.

Note: *If you have a memory device inserted into the proper port on the touch panel, but it doesn't show up as highlighted in Step 1 of the* ***Backup*** *setup screen, then try a different device to determine if the memory device is defective or if there is a possible problem with the memory device connection. It may not be compatible with the panel. This rarely happens with CF memory, but some USB pen drives are not USB 1.1 compatible and will not work with* ***C-more*** *touch panels. Also, some USB pen drives may take several minutes before they are recognized by the panel.*

Please read the explanation for the availability of CF1 under different conditions as shown on the next two pages.

Memory – Backup (cont'd)

CF1 Availability Explanation:

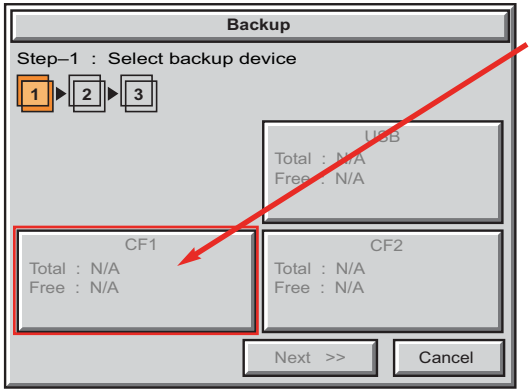

If there is no CompactFlash inserted into CF1 Slot, then the CF1 button's Total and Free memory will show as N/A and be grayed out.

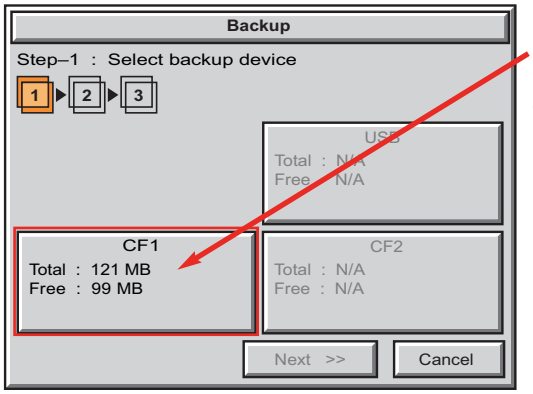

If the panel is powered up or rebooted with a CompactFlash inserted into CF1 Slot, then the CF1 button's Total and Free memory will be displayed.

Memory – Backup (cont'd)

CF1 Availability Explanation (cont'd):

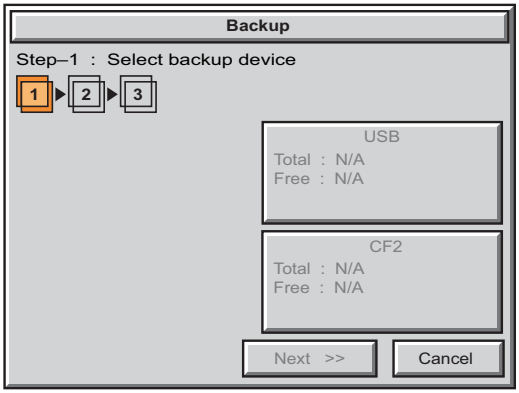

If a CompactFlash is inserted into CF1 Slot and a project is transferred using the *C-more* Programming Software's **Project Transfer** utility **Panel > Transfer**, then the CF1 will not show up in the **Memory - Backup** Step 1 device choices. The CompactFlash will have the runtime files stored on it that get loaded into the touch panel's internal DRAM memory when powered up or rebooted.

5

Below is an example of the folder and file structure that is stored on the CompactFlash in the CF1 Slot for a project that was directly transferred from the *C-more* **Programming Software's Project Transfer** function when viewed in Windows® Explorer on a PC.

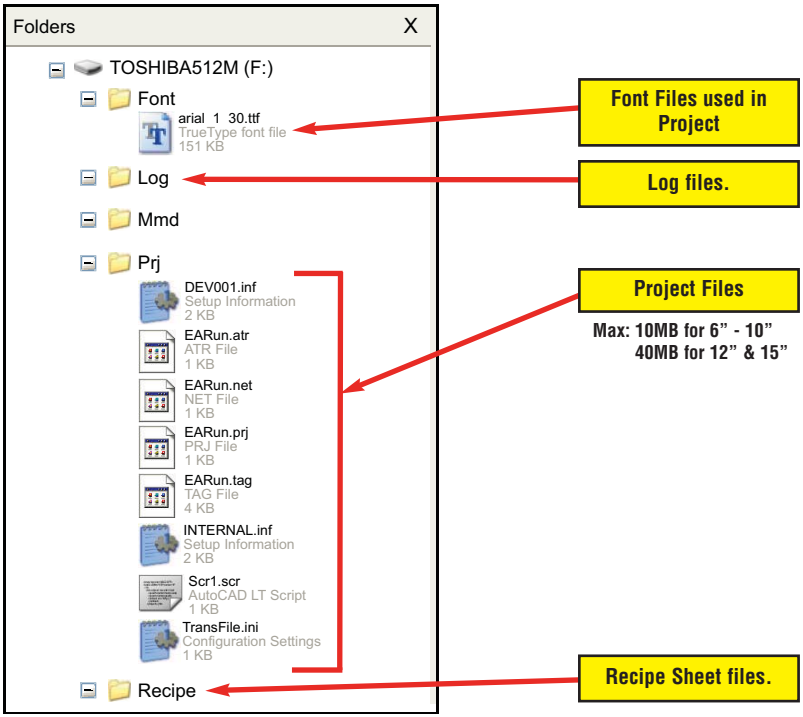

Memory – Backup (cont'd)

Note: *The following definitions are for the various file types that can be backed up:*
Project data *– consists of the actual developed project data that is created in the* ***C-more*** *programming software and includes all functionality, objects, screens, tag names, labels, comments, graphics, etc. Included in backup file name StartupStorage.eas.*
Recipe data – *consists of all the data values and labels that have been created for the various recipe sheets. Includes all recipe sheets loaded to the panel. Only recipe sheets used in the project are loaded to the panel.*
System data *– consists of the operating system, firmware and run time files. Included in backup file name StartupStorage.eas.*
Log data *– consists of the Alarm Log, Message Log and Trend Data Logging files.*

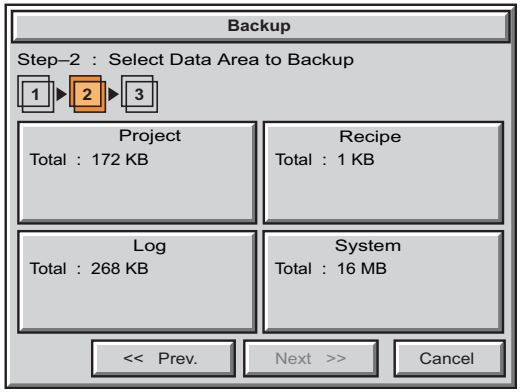

Select the data file(s) to be backed up by pressing the appropriate data file button. The selection will be highlighted.

Pressing the highlighted data file button again will turn it off.

The **Next >>** button will stay grayed out until at least one data file is selected.

Any file type not available will be grayed out.

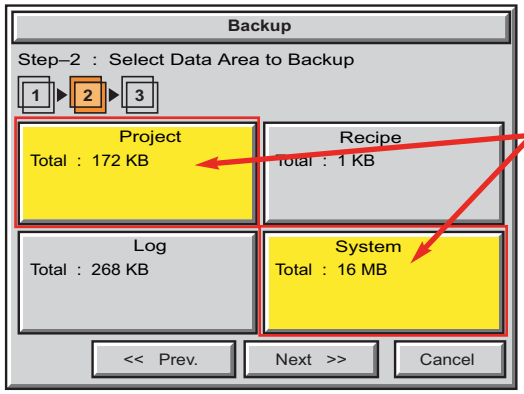

This is an example of data files selected for backing up.

The selected data files are highlighted.

The **Next >>** button is now enabled.

Pressing **Cancel** will return to the previous menu.

Press the **Next** button to continue.

Note: *In the case of the* ***Project*** *and* ***System*** *files, these can be* ***Restored*** *later to another panel.*
In the case of the ***Recipe*** *files, they can be edited externally from the panel and then* ***Restored*** *to the panel.*
The ***Log*** *files are for viewing purposes only.*
See Page 5-44 for instructions on Restoring the Project, System and or Recipe files to a Panel.

Memory – Backup (cont'd)

Backup Data Files Naming and Organization

The following graphic shows how the various data files are organized on the memory device when doing a **Backup** and also the file naming convention that is used when viewed in Windows® Explorer on a PC.

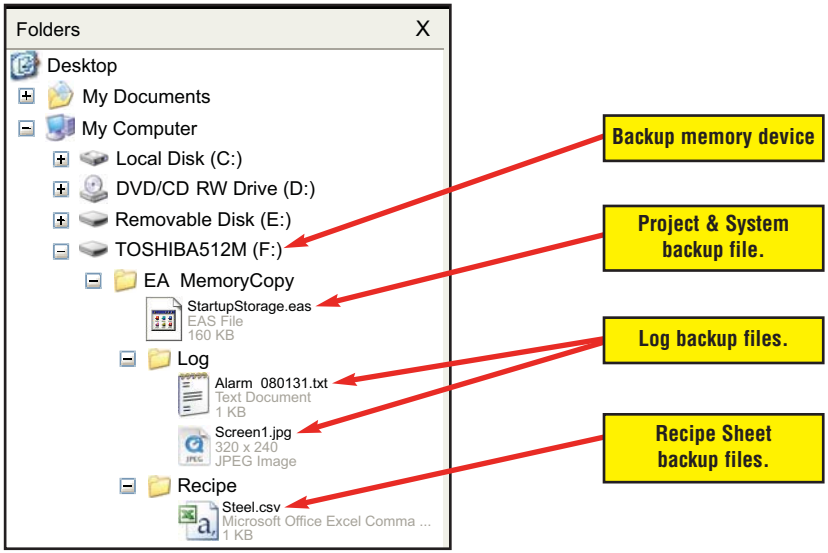

Memory – Backup (cont'd)

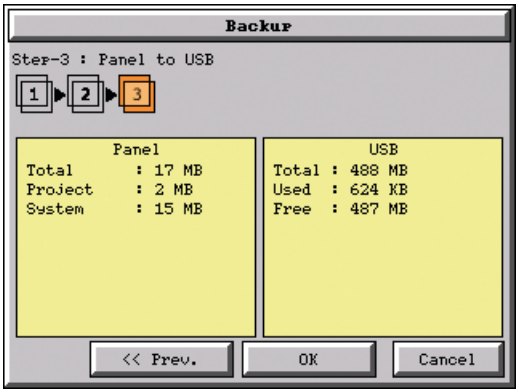

The next system setup screen allows the verification of the data file selections. When the **OK** button is pressed, the backup begins.

The user can return to the previous screen by pressing the **<< Prev** button.

This message is displayed during the **Backup** copying process. Press the **Cancel** button to abort the backup.

The following text is shown in the copying progress message box:

Copy to USB Memory:
"Please do not Power Off or Remove USB"

Copy to CF1 or CF2:
"Please do not Power Off or Remove CF"

WARNING: During the copying process, Do not power off the touch panel or remove the memory device.

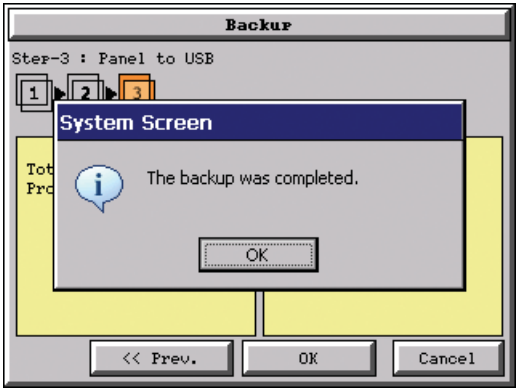

This message is displayed to indicate the **Backup** is complete. Press the **OK** button to return to the previous menu selection.

Memory – Backup (cont'd)

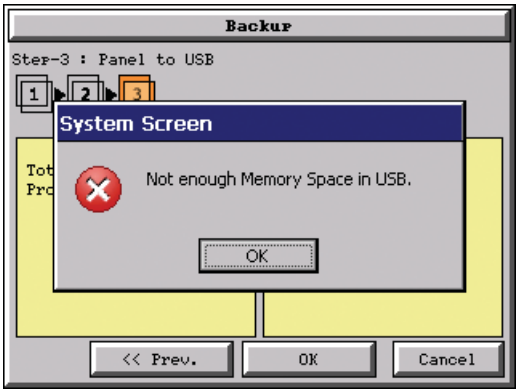

Warning Messages

If the destination does not have enough space to store the selected memory size, then the message shown here will be displayed. Press the **OK** button to clear the warning message.

The warning message will read "Not enough Memory Space in %Device%".

%Device% will show either "CF1", "CF2", or "USB".

This warning message will be displayed if the backup Memory device fails or is removed during the backup. Press the **OK** button to clear the warning message.

The warning message will read "Backup Failed. "%Device% cannot be found".

%Device% will show either "CF1", "CF2", or "USB".

Refer to **Chapter 8: Troubleshooting** for additional help.

For any other reason the backup fails, then this warning message will be displayed. Press the **OK** button to clear the warning message.

The warning message will read "Backup Failed".

Refer to **Chapter 8: Troubleshooting** for additional help.

Memory – Restore

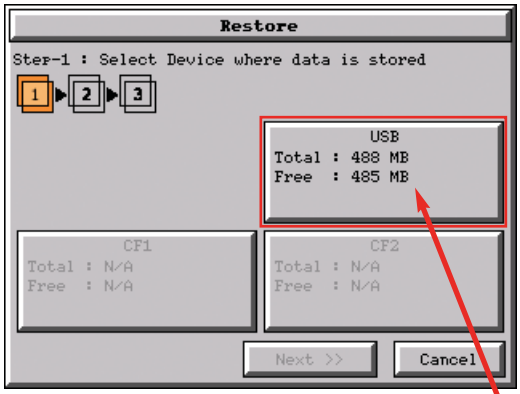

The **Memory - Restore** function is used to:

1.) **Restore** a project previously backed up on a CompactFlash card or USB pen drive memory device to the same panel. See **Memory - Backup** on page 5-37.

2.) Copy a project from one panel to another panel using a memory device to physically transport the data files.

3.) **Restore** a project into the panel that was transfered to an "External Memory Device" using the C-more Programming Software.

4.) **Restore Recipe Sheet(s)** previously backed up to a memory device or copied to the memory device using a PC.

The available memory devices will be displayed showing the total and free available memory for that device. If the device is not available, it will be grayed out. The **Next** button is grayed out until a device is selected.

The **Cancel** button can be pressed at any time to return to the **Memory Menu** screen.

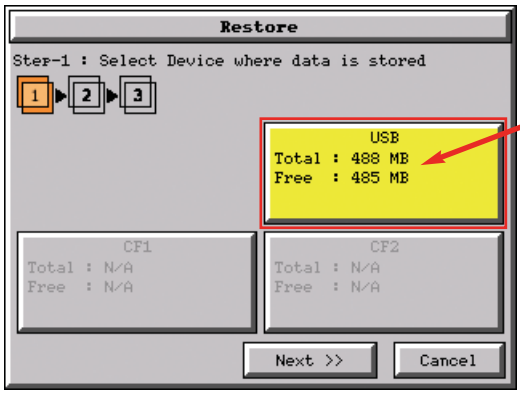

This is an example of a USB memory device selected to be used for restoring the data file(s).

The selected device is highlighted. Pressing again unselects it.

When there are more than two available restore devices, the one selected will be highlighted. If there is only one available memory device, it needs to be highlighted in order to go to the next step.

Press the **Next** button to continue to continue to Step 2.

Note: *If you have a memory device inserted into the proper port on the touch panel, but it doesn't show up as highlighted in Step 1 of the* ***Restore*** *setup screen, then try a different device to determine if the memory device is defective or if there is a possible problem with the memory device connection. It may not be compatible with the panel. This rarely happens with CF mamory, but some USB pen drives are not USB 1.1 compatible and will not work with* ***C-more*** *touch panels. Also, some USB pen drives may take several minutes before they are recognized by the panel.*

Memory – Restore (cont'd)

Please read the explanation for the availability of CF1 under different conditions as shown on this page and the next.

CF1 Availability Explanation:

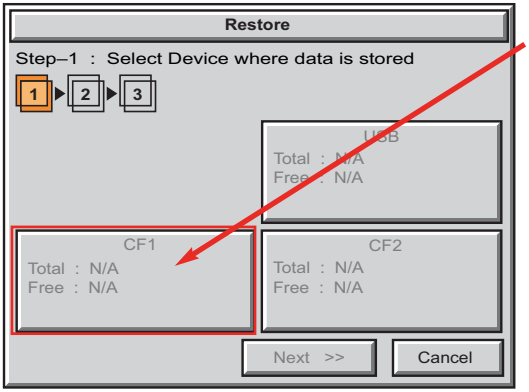

If there is no CompactFlash inserted into CF1 Slot, then the CF1 button's Total and Free memory will show as N/A and be grayed out.

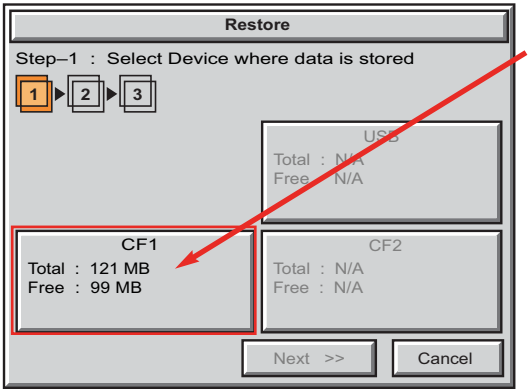

If the panel is powered up or rebooted with a CompactFlash inserted into CF1 Slot, then the CF1 button's Total and Free memory will be displayed.

Memory – Restore (cont'd)

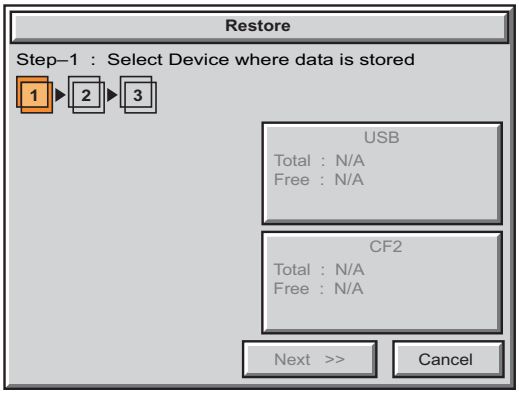

CF1 Availability Explanation (cont'd):

If a CompactFlash is inserted into CF1 Slot and a project is transferred using the *C-more* Programming Software's **Project Transfer** utility **Panel > Transfer**, then the CF1 will not show up in the **Memory - Backup** Step 1 device choices. The CompactFlash will have the runtime files stored on it that get loaded into the touch panel's internal DRAM memory when powered up or rebooted.

See page 5-39 for an example of the folder and file structure that is stored on CF1.

Note: *The following definitions are for the various file types that can be backed up:*
Project data *– consists of the actual developed project data that is created in the* ***C-more*** *programming software and includes all functionality, objects, screens, tag names, labels, comments, graphics, etc. Included in backup file name StartupStorage.eas.*
Recipe data – *consists of all the data values and labels that have been created for the various recipe sheets. Includes all recipe sheets loaded to the panel. Only recipe sheets used in the project are loaded to the panel.*
System data *– consists of the operating system, firmware and run time files. Included in backup file name StartupStorage.eas.*
Log data *– consists of the Alarm Log, Message Log and Trend Data Logging files.*

Memory – Restore (cont'd)

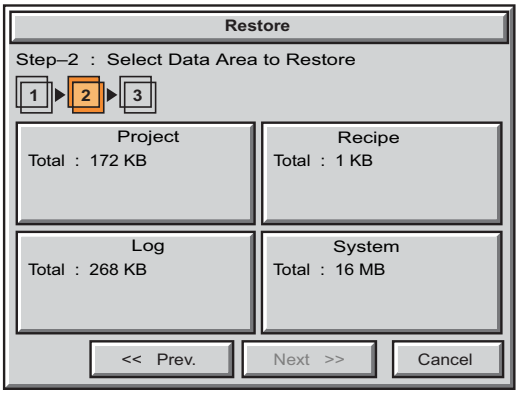

Select the data file(s) to be restored by pressing the appropriate data file button. The selection will be highlighted. The data file can be either the **Project**, **System** and/or **Recipe** files. The selected data is restored to the internal built-in FLASH memory if there is no CompactFlash memory card inserted into the CF1 slot.

Pressing the highlighted data file again will turn it off.

The **Next >>** button will stay grayed out until at least one data file is selected.

Any file type not available will be grayed out.

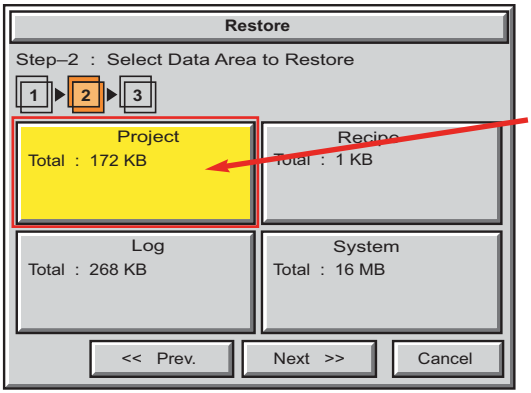

This is an example of a file selected to restore.

The selected file is highlighted.

The **Next >>** button is now enabled.

Pressing **Cancel** will return to the previous menu.

Press the **Next** button to continue.

Note: *The following definitions are for the various file types that can be backed up:*
Project data *– consists of the actual developed project data that is created in the* ***C-more*** *programming software and includes all functionality, objects, screens, tag names, labels, comments, graphics, etc. Included in backup file name StartupStorage.eas.*
Recipe data – *consists of all the data values and labels that have been created for the various recipe sheets. Includes all recipe sheets loaded to the panel. Only recipe sheets used in the project are loaded to the panel.*
System data *– consists of the operating system, firmware and run time files. Included in backup file name StartupStorage.eas.*
Log data *– consists of the Alarm Log, Message Log and Trend Data Logging files.*

Memory – Restore (cont'd)

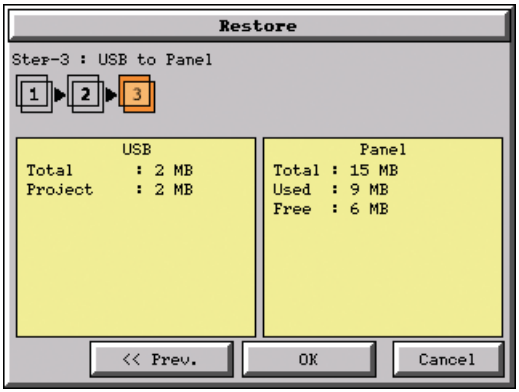

The data selected to restore is checked. If the data is good, then the **OK** button can be pressed to start the restore.

If there is a problem with the data, the **OK** button will remain grayed out and the user can return to the previous screen by pressing the << Prev button.

The problem could be caused by a corrupted data file. See **Chapter 8: Troubleshooting** for additional help.

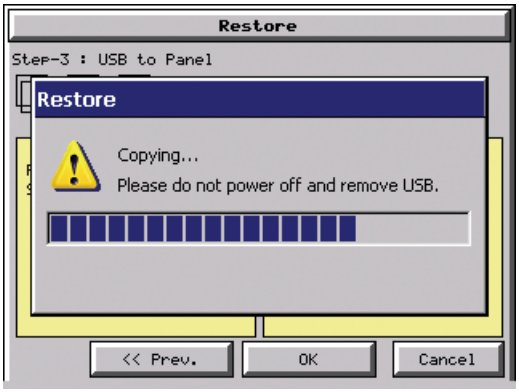

This message is displayed during the **Restore** process. Press the **Cancel** button to abort the backup.

The following text is shown in the copying progress message box:

Copy to USB Memory:
"Please do not Power Off or Remove USB"

Copy to CF1 or CF2:
"Please do not Power Off or Remove CF"

WARNING: During the copying process, Do not power off the touch panel or remove the memory device.

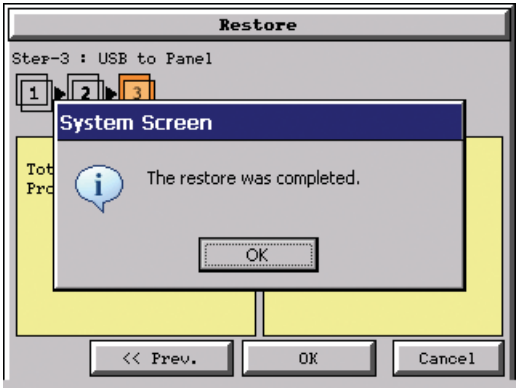

This message is displayed to indicate the **Restore** is complete. Press the **OK** button to return to the previous menu selection.

Memory – Restore (cont'd)

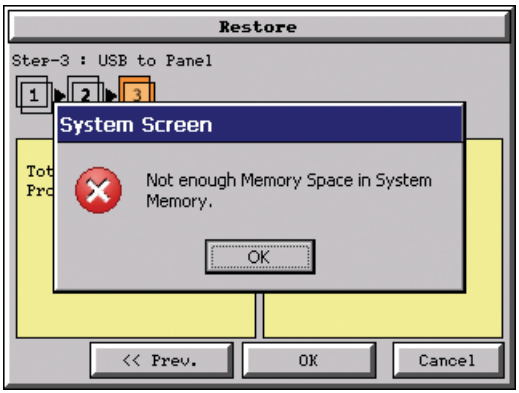

Warning Messages:

If the system memory does not have enough space to restore the selected memory size, then the message shown here will be displayed. Press the **OK** button to clear the warning message.

The warning message will read "Not enough Memory Space in System Memory".

The Project size must be less than 10 MByte for 6"-10" panels and less than 40 MByte for 12" & 15" panels.

This warning message will be displayed if the restore Memory device fails or is removed during the backup. Press the **OK** button to clear the warning message.

The warning message will read "Restore Failed. "%Device% cannot be found".

%Device% will show show "CF1", "CF2", or "USB".

Try using a different device with known good data in the same connector or using the device that is causing the error in a different connector.

For any other reason the restore fails, then this warning message will be displayed. Press the **OK** button to clear the warning message.

Memory – Clear Memory

This function is used to clear individually selected data files, or all data files, within the panel's **Built-in Memory**, or any installed memory device such as a USB pen drive, CompactFlash (CF1 or CF2).

Select the memory device to clear. If the device is not available, it will be grayed out.

The **Next** button is grayed out until a device is selected.

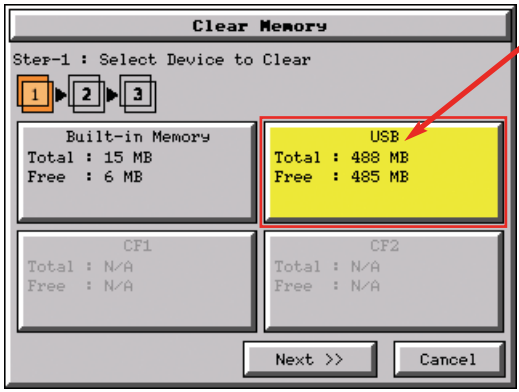

The selected device is highlighted. Pressing again un-selects it.

When there are more than two available backup devices, the one selected will be highlighted. If another is selected, then the highlight will change to the last one pressed. Only one device can be selected at a time.

Press the **Next** button to continue.

Memory – Clear Memory (cont'd)

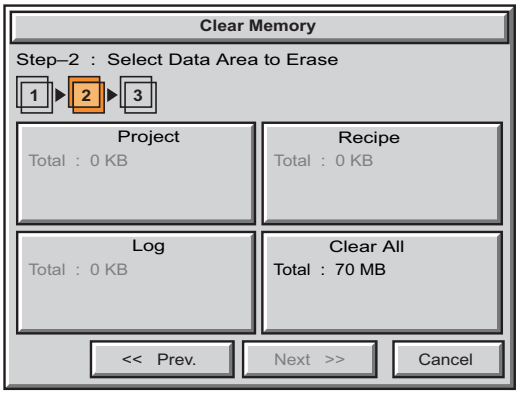

Select the data file(s) to be cleared.

This is an example of CF1, CF2 or USB memory that was selected in **Clear Memory - Step-1**.

The selected file will be highlighted. Pressing again un-selects it.

The **Next >>** button will stay grayed out until file(s) are selected.

Selecting **Clear All** will erase all files located on the memory device.

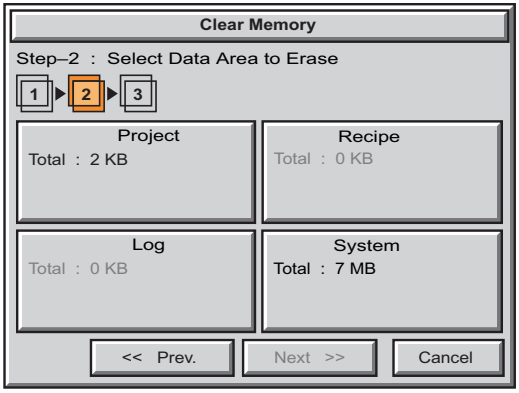

This is an example of **Built-in Memory** that was selected in **Clear Memory - Step-1**.

Notice the ability to select either the **Project** file, **Log** files, **Recipe** files, or the **System** files.

Note: *System files can not be cleared from the internal memory.*

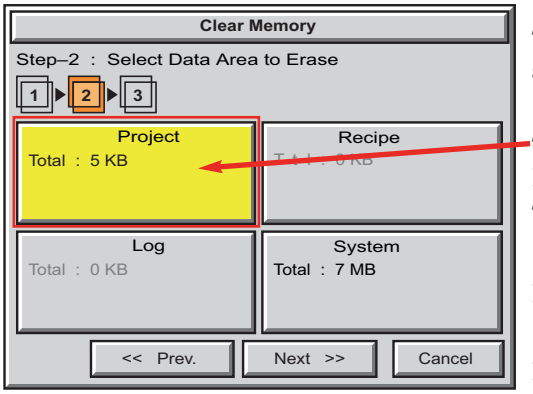

This is an example of the **Project** data file being selected for clearing.

The selected memory area is highlighted. Pressing again un-selects it.

The **Next >>** button is now enabled.

Pressing **Cancel** will un-select the file(s).

Press the **Next** button to continue.

Memory – Clear Memory (cont'd)

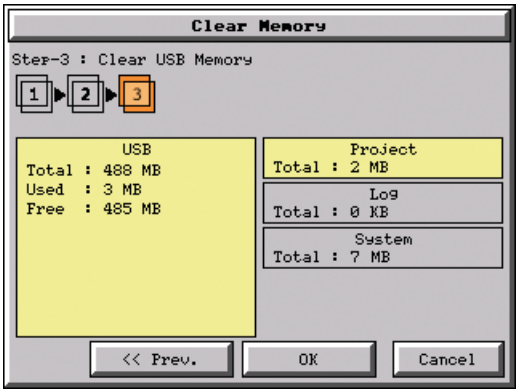

The data file(s)selected to clear are checked. If the data file is good, then the **OK** button can be pressed to start the clear procedure.

If there is a problem with the data file, the **OK** button will remain grayed out and the user can return to the previous screen by pressing the **<< Prev** button.

Press the **OK** button to continue.

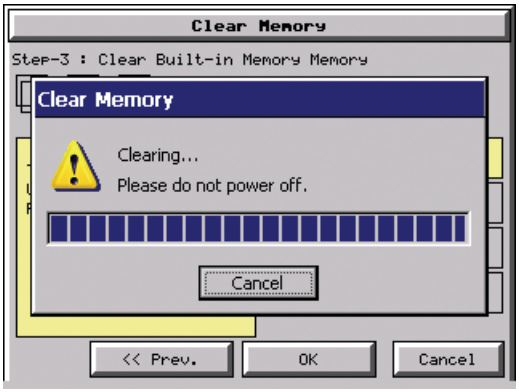

This message is displayed during the clearing process. Press the **Cancel** button to abort the clearing.

The following text is shown in the clearing progress message box:

Clearing Built-in Memory:
"Please do not Power Off"

Clearing USB Memory:
"Please do not Power Off or Remove USB"

Clearing CF1 or CF2

"Please do not Power Off or Remove CF"

WARNING: During the clearing process, do not power off the touch panel or remove the memory device.

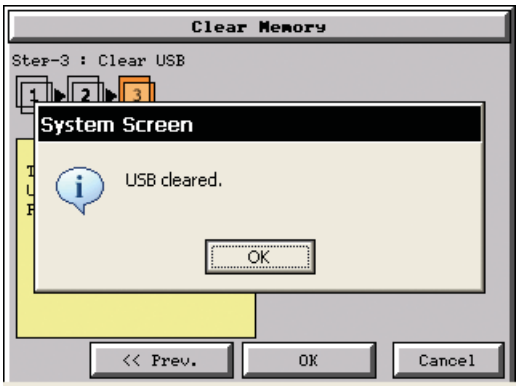

The following message is displayed when the clearing process is complete:

"%Device% cleared"

%Device% will show either "CF1", "CF2", or "USB".

Press the **OK** button to return to the **Memory Menu** screen.

Memory – Clear Memory (cont'd)

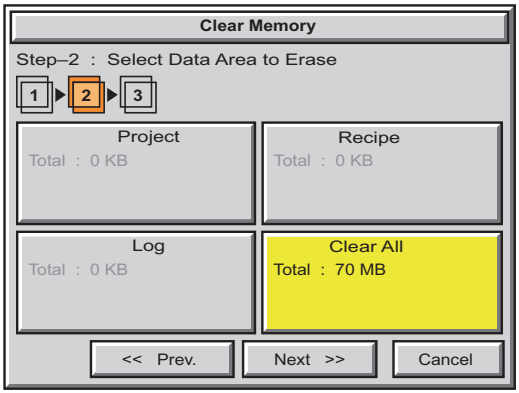

The following is an example of **Clear All** selected for clearing.

The selected device is highlighted.

The **Next >>** button is now enabled.

Pressing **Cancel** will un-select the **Clear All**.

5

Note: *If **Clear All** is selected, all files will be erased from the memory device, even those not related to the **C-more** touch panel.*

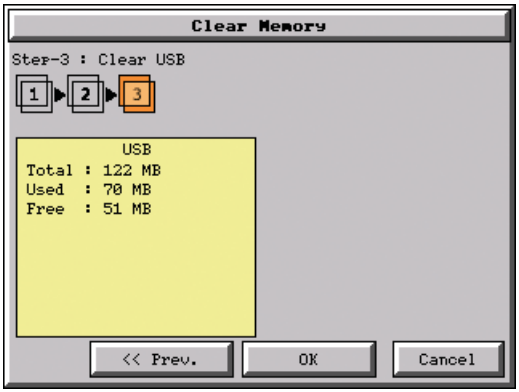

The data file(s)selected to clear are checked. If the data file is good, then the **OK** button can be pressed to start the clear procedure.

If there is a problem with the data file, the **OK** button will remain grayed out and the user can return to the previous screen by pressing the **<< Prev** button.

Press the **OK** button to continue.

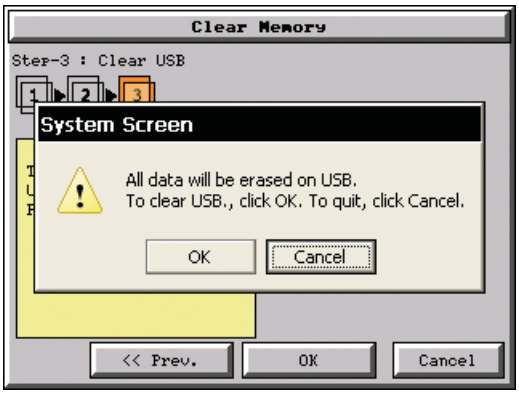

The warning message shown here will be displayed to give the user the opportunity to decide if they want to proceed or not.

Press the **OK** button to continue.

The **Clear All** process will start with a warning message as seen in the first example and continue until a message saying the device is cleared or a warning message as shown on the next page will appear.

Memory – Clear Memory (cont'd)

The warning message shown here will be displayed if the clearing process fails.

"Clear Failed".

Press the **OK** button to return to the **Clear Memory** screen and try again.

If the selected memory still fails to clear, then refer to **Chapter 8: Troubleshooting** for additional help.

Memory – Reset to Factory Default

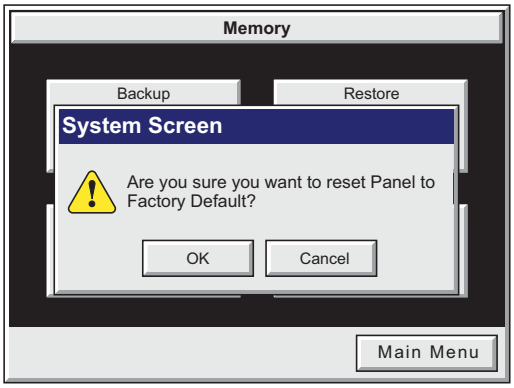

After pressing the **Reset to Factory Default** button from the **Memory Menu**, the message box shown will be displayed.

Resetting to the Factory Defaults produces the following actions:

1.) The touch screen calibration is reset to the Factory Defaults.

2.) The project file is cleared.

3.) The log, recipe & WAV files are cleared.

4.) The IP address is set to DHCP.

5

WARNING: Please make a backup file to either a CF or USB memory device using the Memory Backup function before resetting to the Factory Defaults as a precautionary measure.

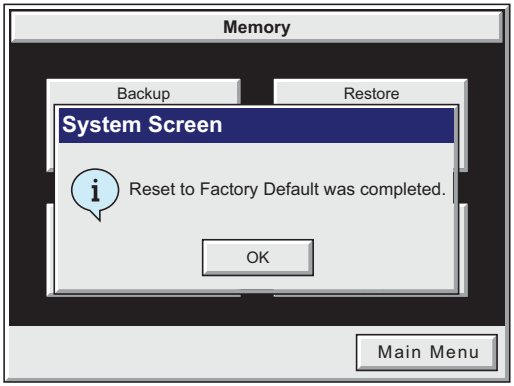

The message shown here is displayed once the **Factory Default** values have been stored into the system memory.

Press **OK** to continue.

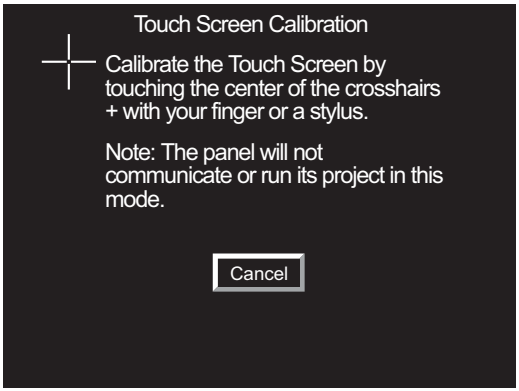

After pressing **OK**, the touch panel will reboot and startup on the **Touch Screen Calibration** procedure as shown here.

The following **note** is also shown on the calibration screens to remind the user that the **Project File** has been cleared, there's no communications with the PLC, and the calibration procedure most be performed in order to ready the panel to download a project:

Note: The panel will not communicate or run its project in this mode.

Also, the ***C-more* Programming Software** will not connect to the panel in this situation.

PLC Communications

Chapter 6

In This Chapter...

Introduction **6–2**

DirectLOGIC PLCs Password Protection **6–2**

PLC Communication Cables & Wiring Diagrams **6–5**

PLC Communication Cables & Wiring Diagrams **6–6**

AutomationDirect PLCs RS-232C Serial: 6–7

Direct LOGIC PLCs RS-422A/RS-485A: 6–10

Direct LOGIC Universal Isolated Network Adapter, p/n FA-ISOCON: 6–14

Direct LOGIC Universal Converter, p/n F2-UNICON: 6–15

RS-422A/RS-485A Multi-Drop Wiring Diagram Examples 6–16

Allen-Bradley: 6–20

GE: 6–24

GE VersaMax Micro: 6–24

Mitsubishi: 6–24

Omron: 6–26

Modicon ModBus RS-232: 6–27

Modicon Micro Series: 6–27

Modicon ModBus with RJ45: 6–27

Siemens: 6–28

Introduction

The *C-more* family of touch panels is capable of communicating with a wide variety of Programmable Logic Controllers. *C-more* is capable of communicating over RS232, RS422 and RS485 serial networks as well as Ethernet networks. It communicates with all AutomationDirect PLC's utilizing various protocols. *C-more* also communicates with other brands of PLCs by their different protocols. The table on the next page lists all of the various PLCs and protocols that can be configured. The page after the protocol table lists the various serial communication cables that are available to purchase. The rest of this chapter is devoted to show the pin to pin connections of all the available cables plus wiring diagrams that the user can refer to in order to construct their own cables, along with wiring diagrams of cables that are not available for purchase. To simplify RS422/RS485 wiring schemes, we have included wiring diagrams showing connections for available terminal connectors such as our ZIPLink Communication Adapter Module, p/n ZL-CMA15, used for example with our DL-06 and D2-260 PLCs and *C-more* D-Sub 15-pin to Terminal Block Adapter p/n EA-COMCON-3.

If you have difficulty determining whether the particular PLC and/or protocol you are using will work with the *C-more* series of touch panels, please contact our technical support group at 770-844-4200

*Direct*LOGIC PLCs Password Protection

NOTE: *Many **Direct**Logic PLCs support multi-level password protection of the ladder program. This allows password protection while not locking the communication port to an operator interface. The multilevel password can be invoked by creating a password with an upper case "A" followed by seven numeric characters (e.g. A1234567). Please refer to the specific PLC user manual for further details.*

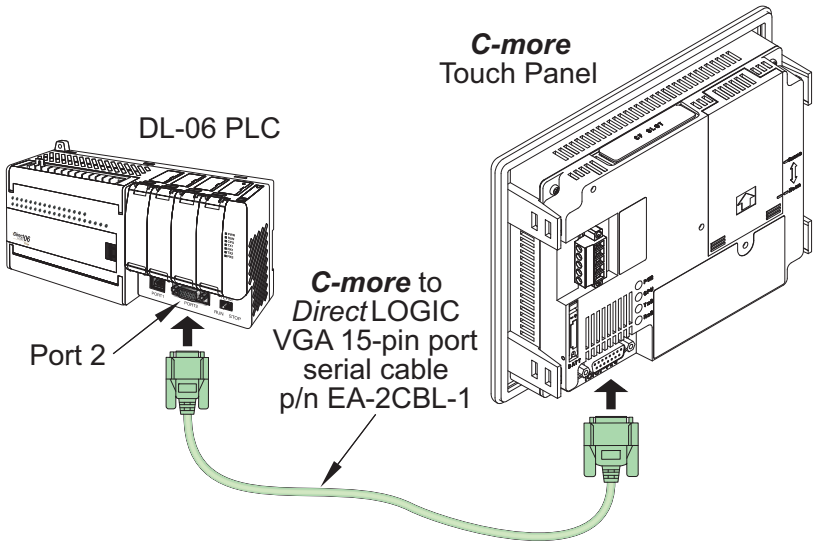

PLC Protocol & Cables

PLC Compatibility Table			
PLC Family	**Model**		**Protocols**
CLICK	all		AutomationDirect Modbus (CLICK)
AutomationDirect *Direct*LOGIC	DL05/DL06	all	K-Sequence
			*Direct*NET
			Modbus (Koyo addressing)
		H0-ECOM/H0-ECOM100	*Direct*LOGIC Ethernet
	DL105	all	K-Sequence
	DL205	D2-230	K-Sequence
		D2-240	K-Sequence
			*Direct*NET
		D2-250/D2-250-1/D2-260	K-Sequence
			*Direct*NET
			Modbus (Koyo addressing)
		D2-240/D2-250-1/D2-260 Using DCM	*Direct*NET
			Modbus (Koyo addressing)
		H2-ECOM/H2-ECOM100	*Direct*LOGIC Ethernet
	DL305	D3-330/330P (Requires the use of a Data Communications Unit)	*Direct*NET
		D3-340	*Direct*NET
		D3-350	K-Sequence
			*Direct*NET
			Modbus (Koyo addressing)
		D3-350 DCM	*Direct*NET
			Modbus (Koyo addressing)
	DL405	D4-430	K-Sequence
			*Direct*NET
		D4-440	K-Sequence
			*Direct*NET
		D4-450	K-Sequence
			*Direct*NET
			Modbus (Koyo addressing)
		All with DCM	*Direct*NET
			Modbus (Koyo addressing)
		H4-ECOM/H4-ECOM100	*Direct*LOGIC Ethernet
	H2-WinPLC (Think & Do) Live V5.2 or later and Studio any version		Think & Do Modbus RTU (serial port)
	H2-WinPLC (Think & Do) Live V5.5.1 or later and Studio V7.2.1 or later		Think & Do Modbus TCP/IP (Ethernet port)

PLC Compatibility Table continued on the next page.

PLC Protocol & Cables (cont'd)

PLC Compatibility Table (cont'd)		
PLC Family	**Model**	**Protocols**
Allen-Bradley	MicroLogix 1000, 1100, 1200, 1400, 1500, SLC 5-01/02/03, PLC5	DH485/AIC/AIC+
	MicroLogix 1000, 1100, 1200, 1400, 1500	DF1 Half Duplex; DF1 Full Duplex
	SLC 5-03/04/05	
	ControlLogix™, CompactLogix™, FlexLogix™	
	PLC-5	DF1 Full Duplex
	ControlLogix, CompactLogix, FlexLogix - Tag Based	DF1 Half Duplex; DF1 Full Duplex
	ControlLogix, CompactLogix, FlexLogix - Generic I/O Messaging	EtherNet/IP Server
	ControlLogix, CompactLogix, FlexLogix - Tag Based	EtherNet/IP Client
	MicroLogix 1100, 1400, SLC 5/05, both via native Ethernet port	
	MicroLogix 1000, 1100, 1200, 1400, 1500, SLC 5-03/04/05, all via ENI adapter	
Modbus TCP/IP	Modbus TCP/IP devices	Modbus TCP/IP
GE	90/30, 90/70. Micro 90, VersaMax Micro	SNPX
Mitsubishi	FX Series	FX Direct
	Q02, Q02H, Q06H, Q12H, Q25H	Q CPU
	Q, QnA Serial	QnA Serial
	Q, QnA Ethernet	QnA Ethernet
Omron	C200 Adapter, C500	Host Link
	CJ1/CS1 Serial	FINS
	CJ1/CS1 Ethernet	
Modicon	984 CPU, Quantum 113 CPU, AEG Modicon Micro Series 110 CPU: 311-xx, 411-xx, 512-xx, 612-xx	Modbus RTU
Siemens	S7-200 CPU, RS-485 Serial	PPI
	S7-200 CPU, S7-300 CPU; Ethernet	Ethernet ISO over TCP

PLC Communication Cables & Wiring Diagrams

Purchased Cable Description	Cable Part Number
AutomationDirect CLICK, *Direct*LOGIC PLC RJ-12 port, DL05, DL06, DL105, DL205, D3-350, D4-450 & H2-WINPLC (RS-232C)	**EA-2CBL**
*Direct*LOGIC (VGA Style) 15-pin port DL06, D2-250 (250-1), D2-260 (RS-232C)	**EA-2CBL-1**
*Direct*LOGIC PLC RJ-11 port, D3-340 (RS-232C)	**EA-3CBL**
*Direct*LOGIC DL405 PLC 15-pin D-sub port, DL405 (RS-232C)	**EA-4CBL-1**
*Direct*LOGIC PLC 25-pin D-sub port, DL405, D3-350, DL305 DCU and all DCM's (RS-232C)	**EA-4CBL-2**
Allen-Bradley MicroLogix 1000, 1100, 1200, 1400, 1500 (RS-232C)	**EA-MLOGIX-CBL**
Allen-Bradley SLC 5-03/04/05, ControlLogix, CompactLogix, FlexLogix DF1 port (RS-232C)	**EA-SLC-232-CBL**
Allen-Bradley PLC-5 DF1 port (RS-232C)	**EA-PLC5-232-CBL**
Allen-Bradley MicroLogix, SLC 5-01/02/03, PLC5 DH485 port (RS-232C)	**EA-DH485-CBL**
GE 90/30, 90/70, Micro 90, VersaMax Micro 15-pin D-sub port (RS-422A)	**EA-90-30-CBL**
MITSUBISHI FX Series 25-pin port (RS-422A)	**EA-MITSU-CBL**
MITSUBISHI FX Series 8-pin mini-DIN (RS-422A)	**EA-MITSU-CBL-1**
OMRON Host Link C200 Adapter, C500 (RS-232C)	**EA-OMRON-CBL**

Part No. EA-2CBL

Part No. EA-2CBL-1

Part No. EA-3CBL

6

NOTE 1: *The above list of pre-made communications cables may be purchased. See further in this chapter for wiring diagrams of additonal* ***user constructed cables****. This chapter also includes wiring diagrams for the pre-made cables.*

NOTE 2: *EZTouch serial PLC communication cables are compatible with* ***C-more*** *touch panels.*

C-more PLC Serial Communications Port

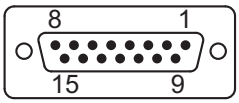

D-Sub 15-pin female on rear of touch panel

PLC Communication Cables & Wiring Diagrams

Part No. EA-4CBL-1

Part No. EA-4CBL-1

Part No. EA-MLOGIX-CBL

Part No. EA-SLC-232-CBL

Part No. EA-PLC5-232-CBL

Part No. EA-DH485-CBL

Part No. EA-90-30-CBL

Part No. EA-MITSU-CBL

Part No. EA-MITSU-CBL-1

Part No. EA-OMRON-CBL

PLC Communication Cables & Wiring Diagrams (cont'd)

The following series of wiring diagrams show the connectors and wiring details for the communication cables that are used between the *C-more* touch panels and various PLC controllers. Part numbers are included with the **pre-made cables** that can be purchased from *AutomationDirect*. The information presented will allow the user to construct their own cables if so desired.

AutomationDirect PLCs RS-232C Serial: *EA-2CBL*

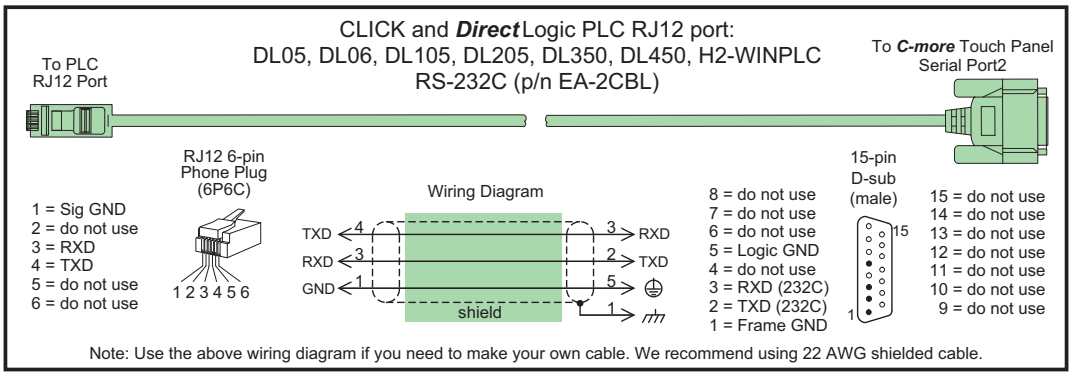

EA-2CBL-1

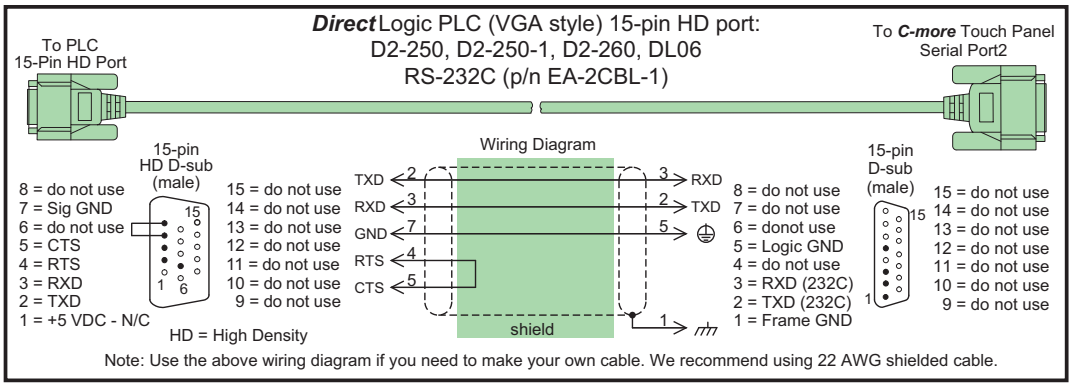

AutomationDirect PLCs RS-232C Serial (cont'd):

EA-3CBL

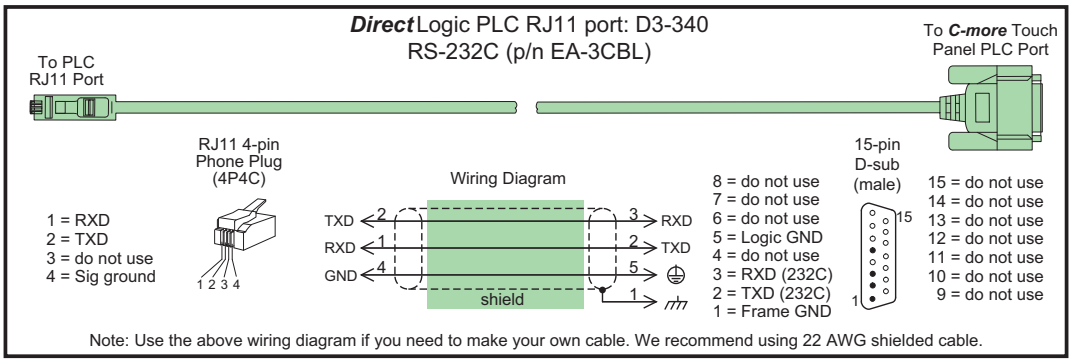

Note: Use the above wiring diagram if you need to make your own cable. We recommend using 22 AWG shielded cable.

6

AutomationDirect PLCs RS-232C Serial (cont'd):

EA-4CBL-1

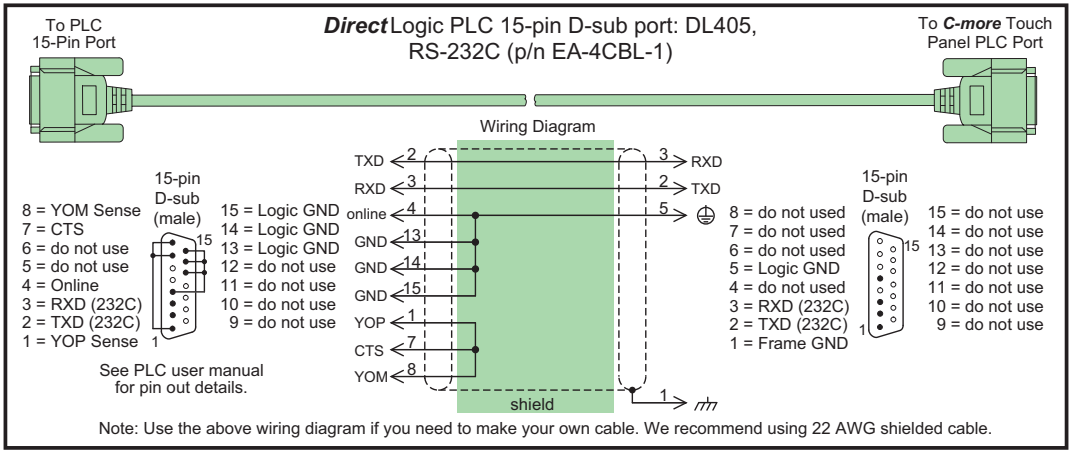

Note: Use the above wiring diagram if you need to make your own cable. We recommend using 22 AWG shielded cable.

EA-4CBL-2

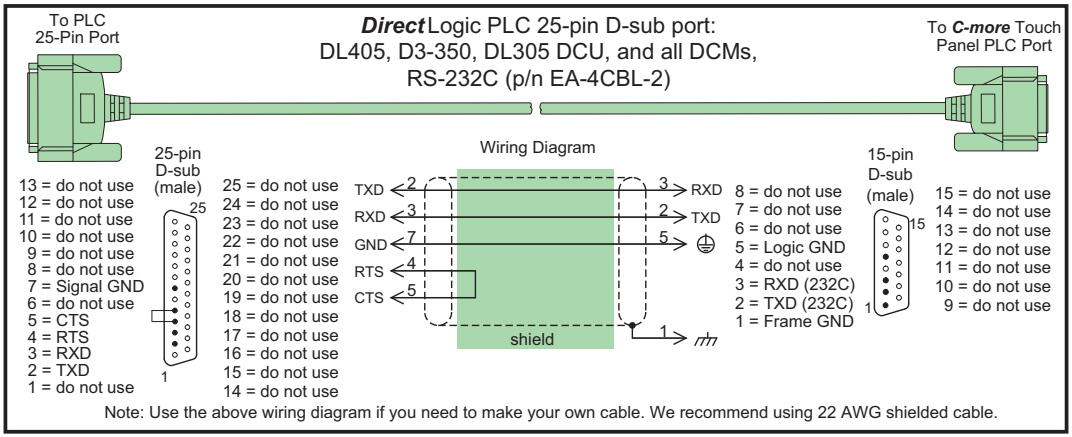

Note: Use the above wiring diagram if you need to make your own cable. We recommend using 22 AWG shielded cable.

Direct LOGIC PLCs RS-422A/RS-485A:

When using the RS-422A/RS-485A capabilities of the *C-more* PLC communications port, the termination resistor is placed between the **RXD–** and **RXD+** terminals on the PLC side of the connection between the touch panel and PLC. The Termination Resistor value is based on the characteristic impedance of the cable being used. To enable the built-in 120 Ohm Termination Resistor, jumper pin **13** to pin **9** (**RXD+**) on the *C-more* 15-pin PLC communications port.

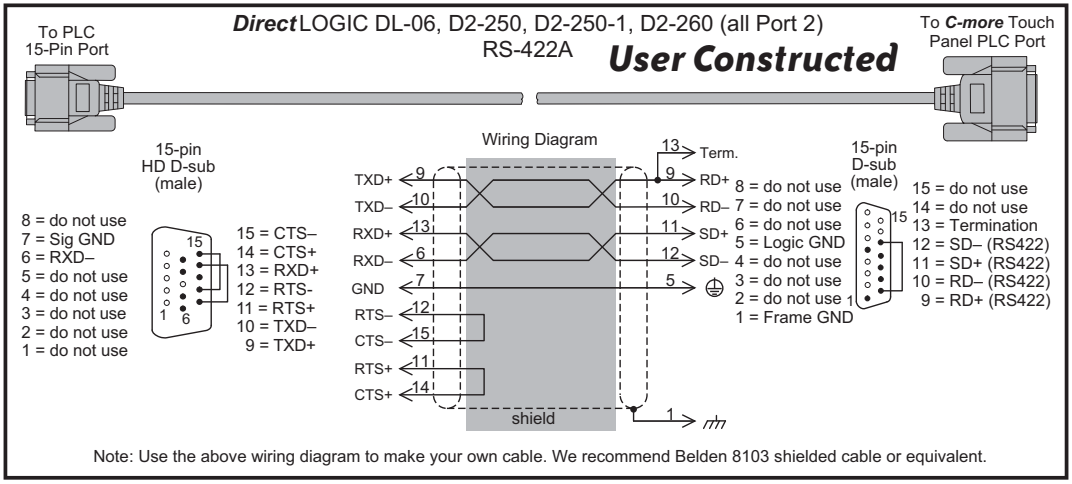

Note: Use the above wiring diagram to make your own cable. We recommend Belden 8103 shielded cable or equivalent.

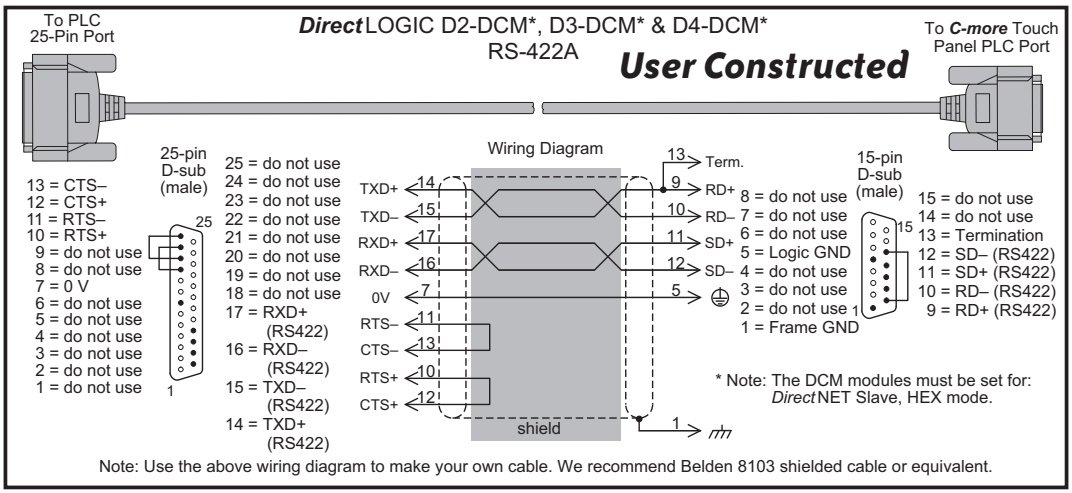

Note: Use the above wiring diagram to make your own cable. We recommend Belden 8103 shielded cable or equivalent.

NOTE: *The RS-422 wiring diagrams shown above are not for multi-drop networks involving connecting more than one PLC to a panel. Refer to the wiring diagram example on page 6-16 if more than one PLC will be connected to a panel.*

Direct LOGIC PLCs RS-422A/RS-485A (cont'd):

User Constructed

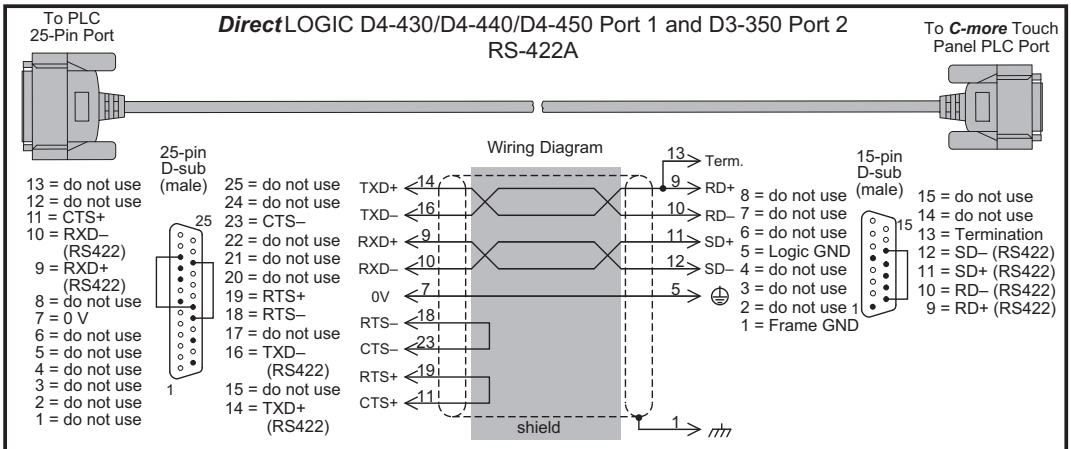

Note: Use the above wiring diagram to make your own cable. We recommend Belden 8103 shielded cable or equivalent.

User Constructed

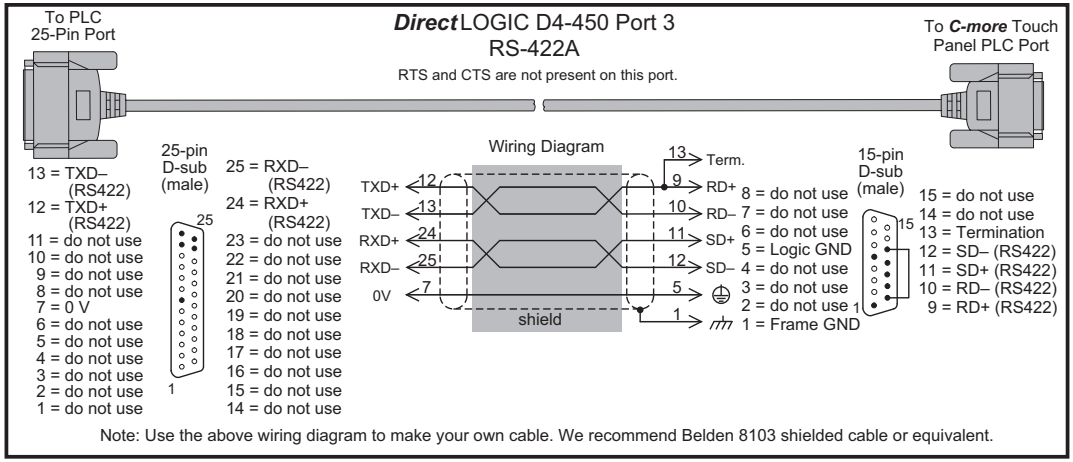

Note: Use the above wiring diagram to make your own cable. We recommend Belden 8103 shielded cable or equivalent.

NOTE: *The RS-422 wiring diagrams shown above are not for multi-drop networks involving connecting more than one PLC to a panel. Refer to the wiring diagram example on page 6-16 if more than one PLC will be connected to a panel.*

Direct LOGIC PLCs RS-422A/RS-485A (cont'd):

User Constructed

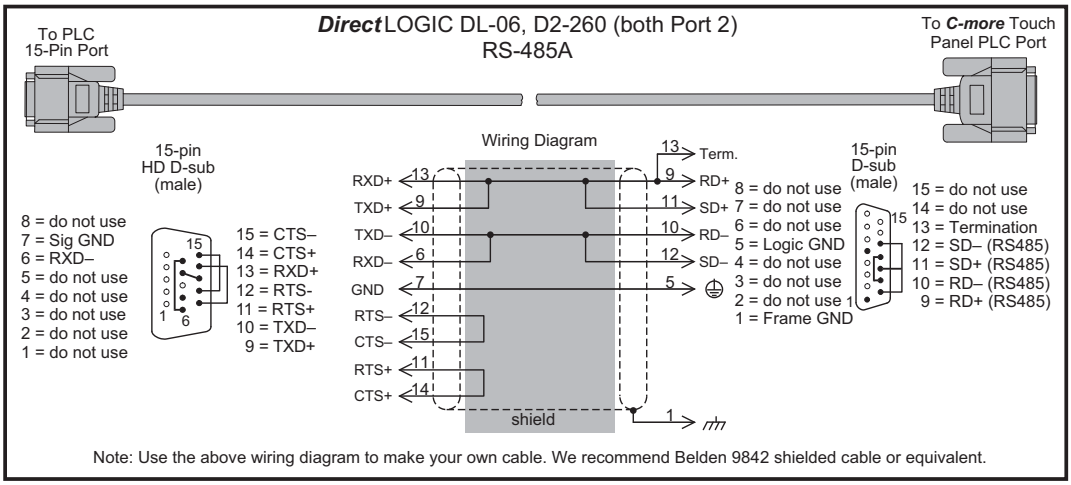

Note: Use the above wiring diagram to make your own cable. We recommend Belden 9842 shielded cable or equivalent.

NOTE: *The RS-485 wiring diagram shown above is not for multi-drop networks involving connecting more than one PLC to a panel. Refer to the wiring diagram example on page 6-16 if more than one PLC will be connected to a panel.*

Direct LOGIC PLCs RS-422A/RS-485A (cont'd):

***Direct* LOGIC** ZIPLink ZL-CMA15L Adapter Module to EA-COMCON-3 Terminal Block Adapter
RS-485A PLC D2-260 or DL06 only Port 2

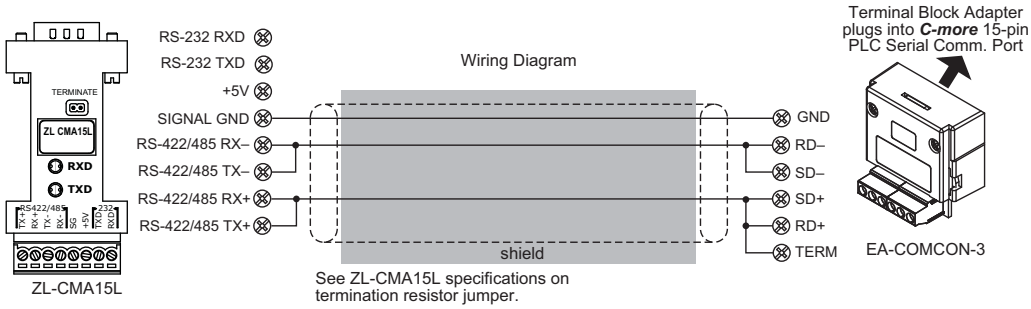

Note: Use the above wiring diagram to make your own cable. We recommend Belden 8103 shielded cable or equivalent.

***Direct* LOGIC** ZIPLink ZL-CMA15L Adapter Module to EA-COMCON-3 Terminal Block Adapter
RS-422A PLC D2-250 (-1), D2-260 or DL06 Port 2

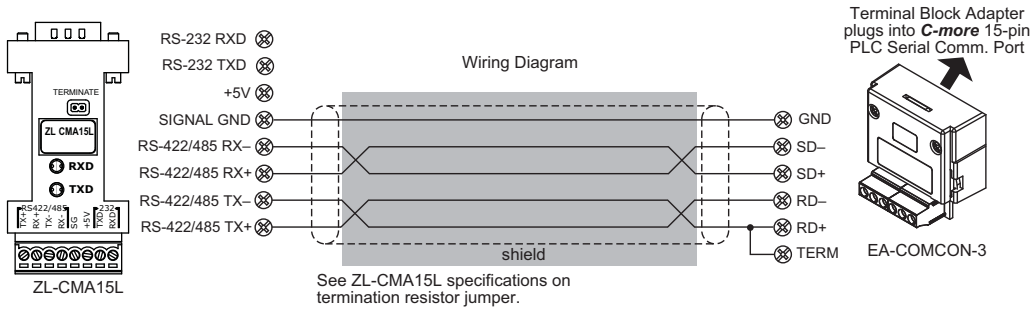

Note: Use the above wiring diagram to make your own cable. We recommend Belden 9842 shielded cable or equivalent.

NOTE: *The RS-422 and RS-485 wiring diagrams shown above are not for multi-drop networks involving connecting more than one PLC to a panel. Refer to the wiring diagram examples starting on page 6-14 if more than one PLC will be connected to a panel.*

Direct LOGIC Universal Isolated Network Adapter, p/n FA-ISOCON:

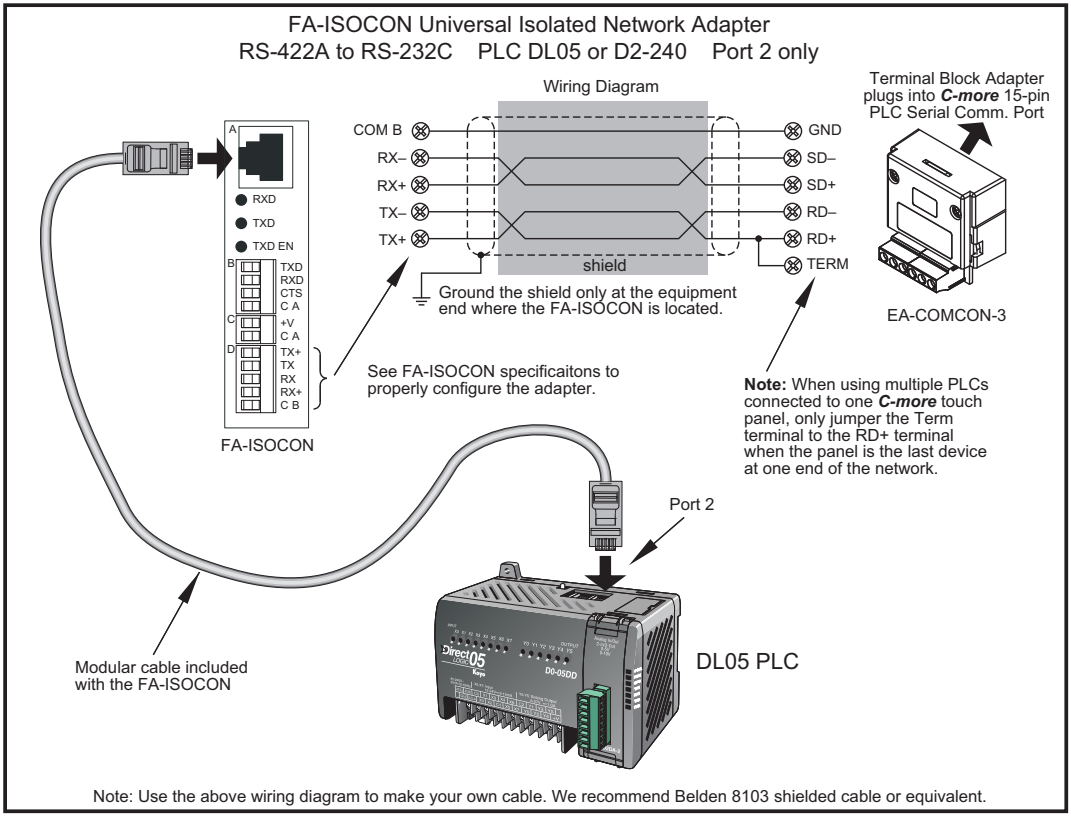

Note: Use the above wiring diagram to make your own cable. We recommend Belden 8103 shielded cable or equivalent.

Direct LOGIC Universal Converter, p/n F2-UNICON:

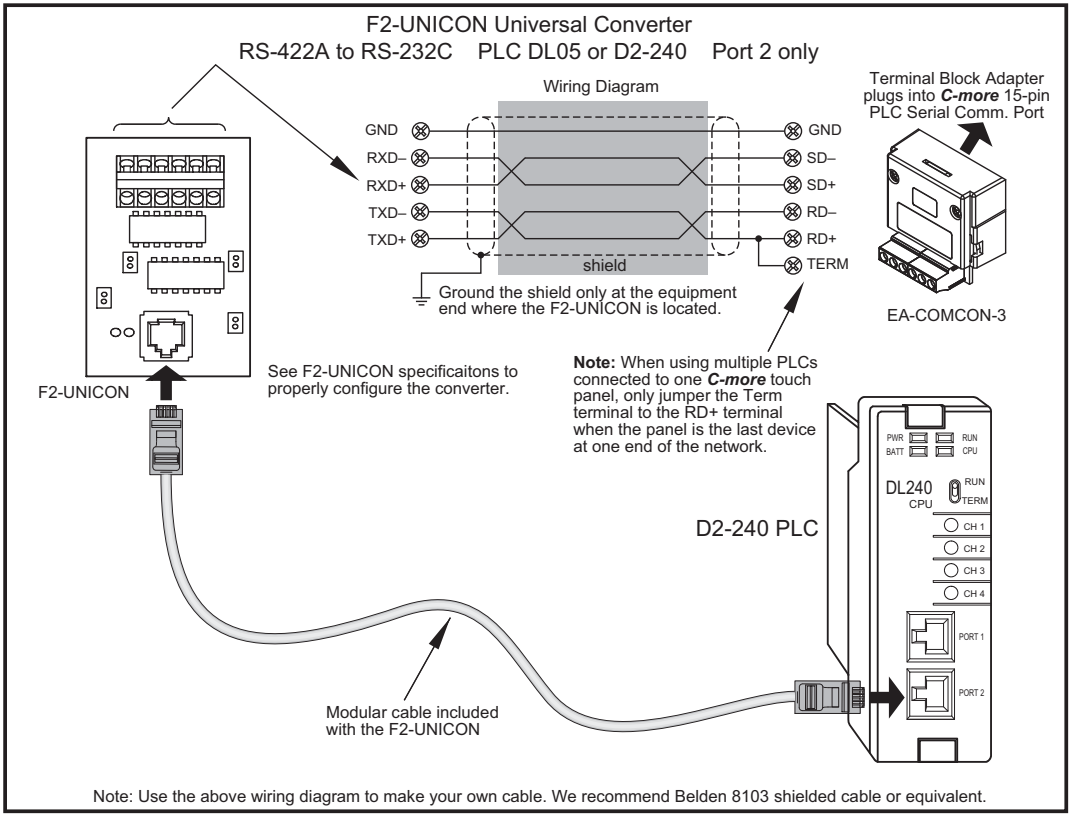

Note: Use the above wiring diagram to make your own cable. We recommend Belden 8103 shielded cable or equivalent.

6

RS-422A/RS-485A Multi-Drop Wiring Diagram Examples

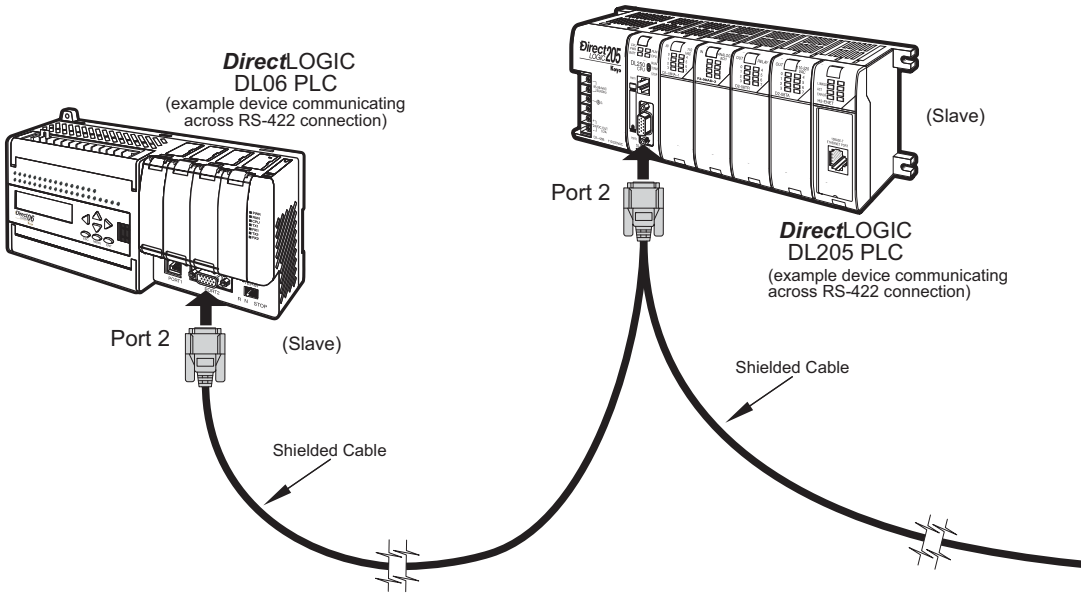

Note: We recommend Belden 8103 shielded cable or equivalent.

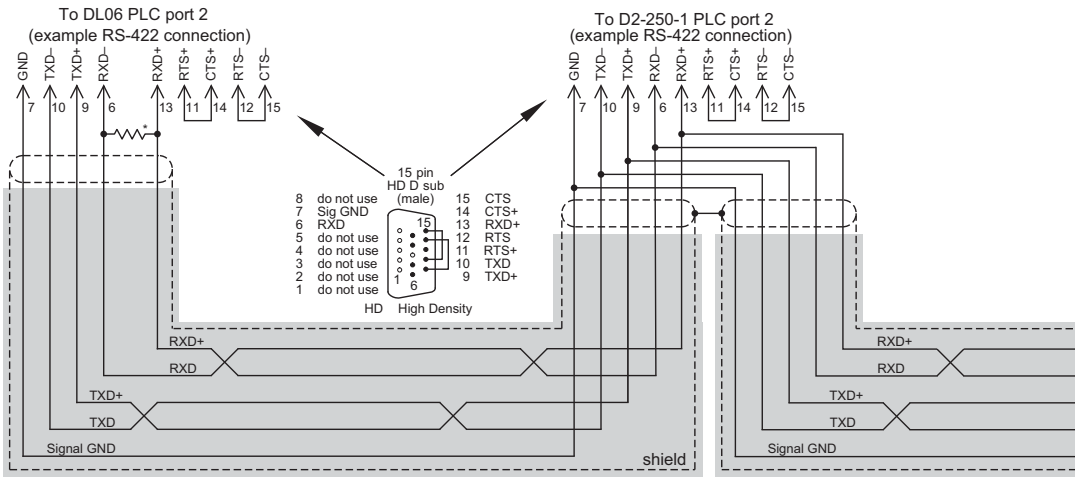

* Termination resistors required at both ends of the network receive data signals to match the impedance of the cable (between 100 and 500 ohms)

Typical RS-422 Multi-Drop Wiring Diagram

RS-422A/RS-485A Multi-Drop Wiring Diagram Examples (cont'd)

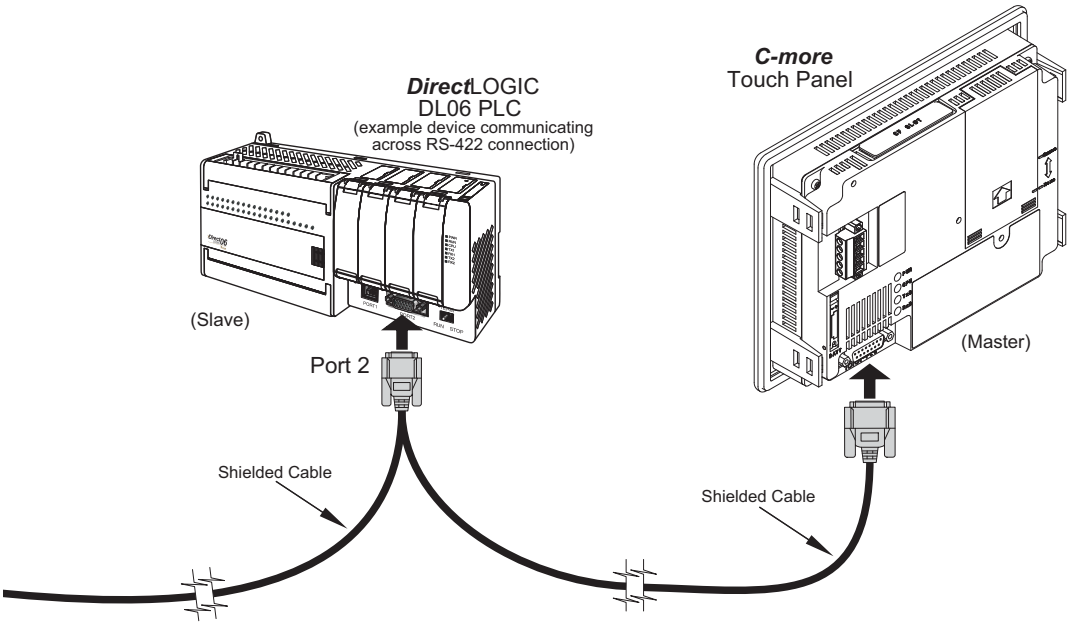

Note: We recommend Belden 8103 shielded cable or equivalent.

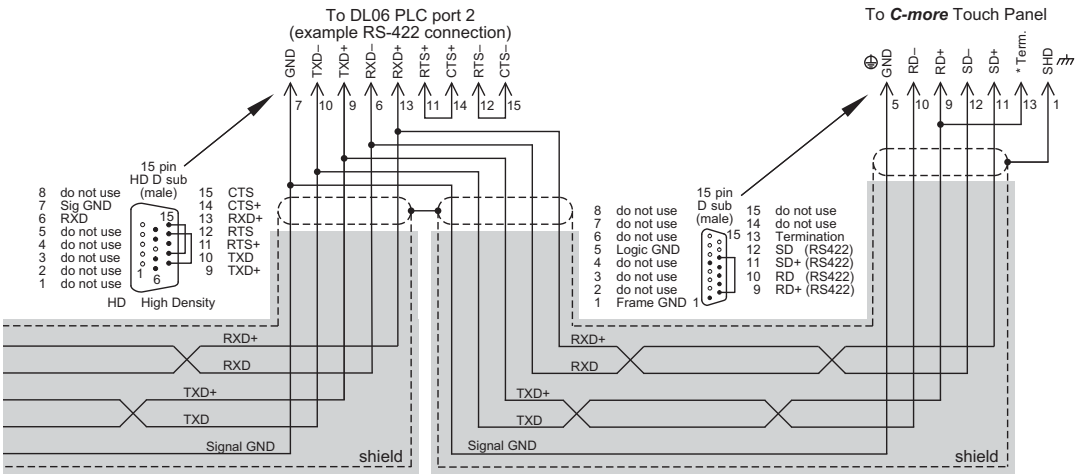

Typical RS-422 Multi-Drop Wiring Diagram (cont'd)

* Termination resistors required at both ends of the network receive data signals to match the impedance of the cable (between 100 and 500 ohms) Jumper pin 13 to 9 on the ***C-more*** Touch Panel 15 pin connector to place the 120Ω internal resistor into the network If the cable impedance is different, then use an external resistor matched to the cable impedance

RS-422A/RS-485A Multi-Drop Wiring Diagram Examples (cont'd)

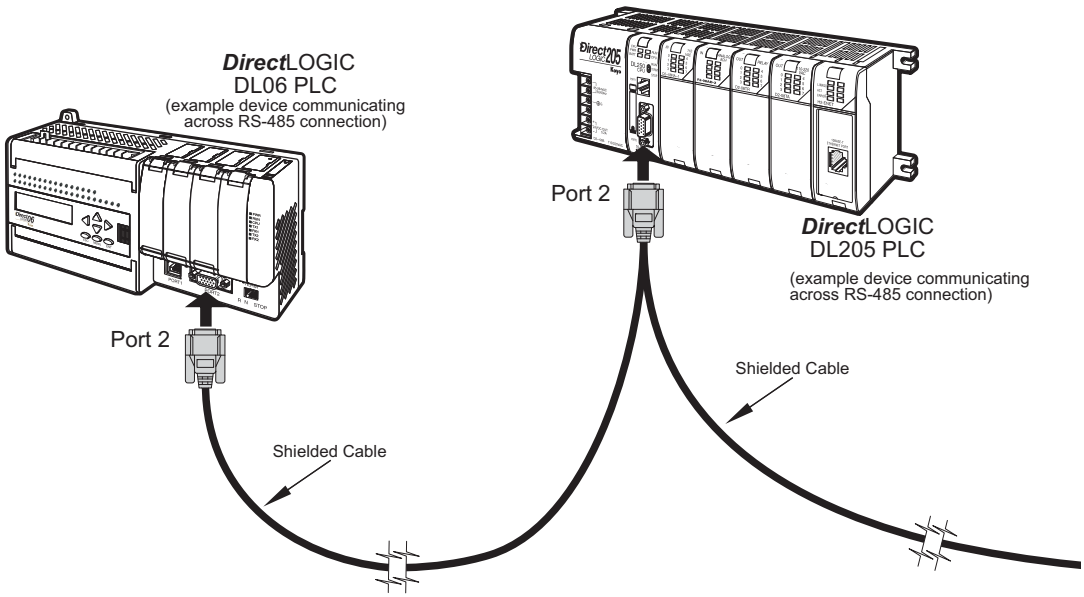

Note: We recommend Belden 88102 shielded cable or equivalent.

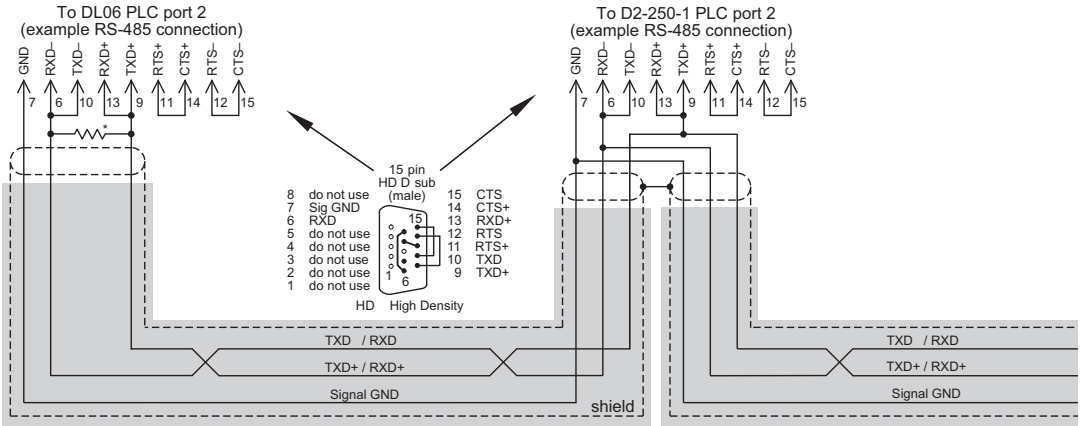

* Termination resistors required at both ends of the network to match the impedance of the cable (between 100 and 500 ohms)

Typical RS-485 Multi-Drop Wiring Diagram

RS-422A/RS-485A Multi-Drop Wiring Diagram Examples (cont'd)

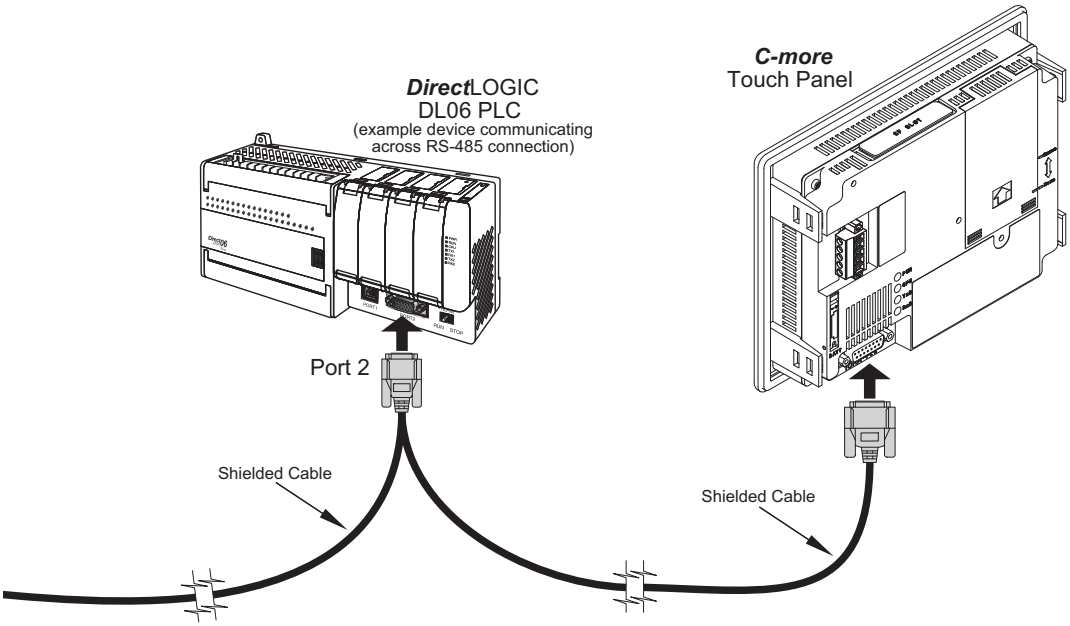

Note: We recommend Belden 88102 shielded cable or equivalent.

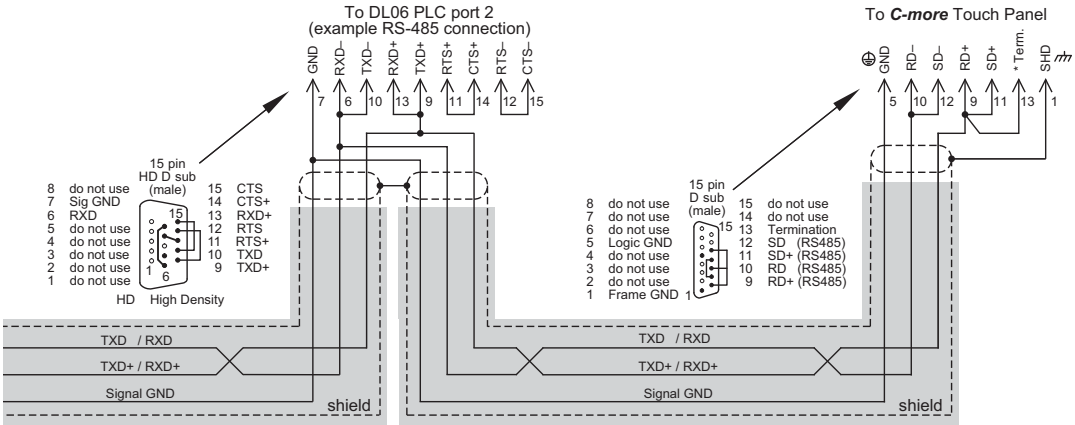

Typical RS-485 Multi-Drop Wiring Diagram (cont'd)

* Termination resistors required at both ends of the network receive data signals to match the impedance of the cable (between 100 and 500 ohms) Jumper pin 13 to 9 on the ***C-more*** touch panel 15 pin connector to place the 120Ω internal resistor into the network If the cable impedance is different, then use an external resistor matched to the cable impedance

Allen-Bradley:

EA-MLOGIX-CBL

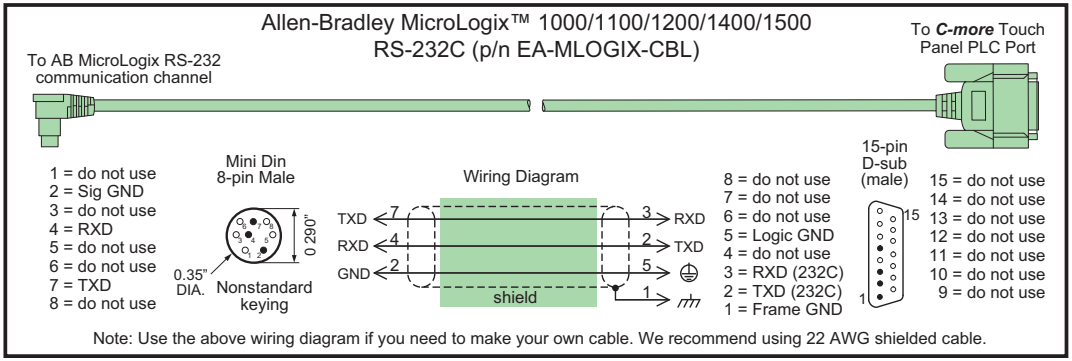

Note: Use the above wiring diagram if you need to make your own cable. We recommend using 22 AWG shielded cable.

EA-SLC-232-CBL

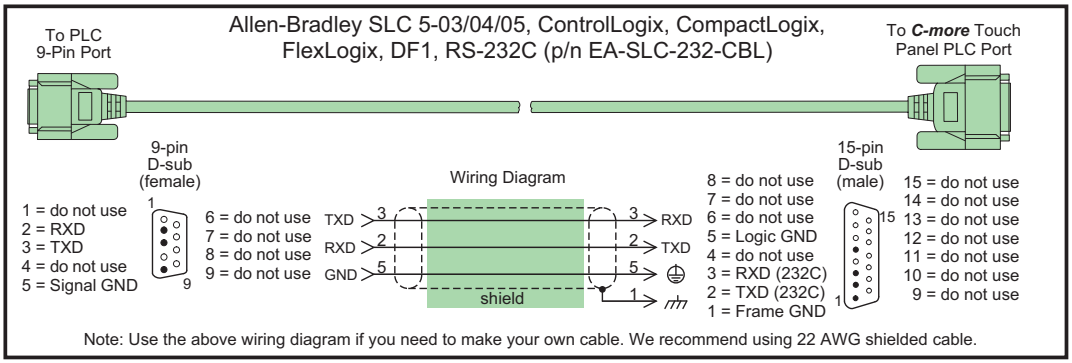

Note: Use the above wiring diagram if you need to make your own cable. We recommend using 22 AWG shielded cable.

EA-PLC5-232-CBL

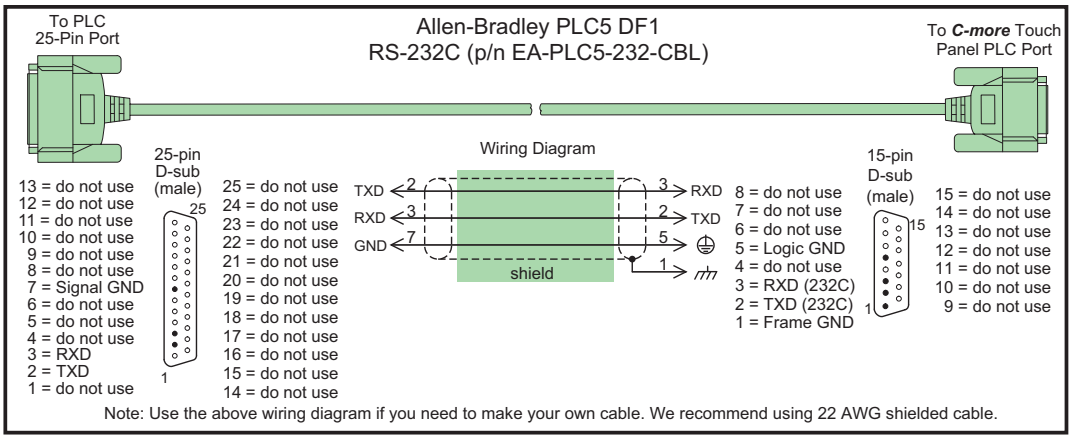

Note: Use the above wiring diagram if you need to make your own cable. We recommend using 22 AWG shielded cable.

Allen-Bradley (cont'd): EA-DH485-CBL

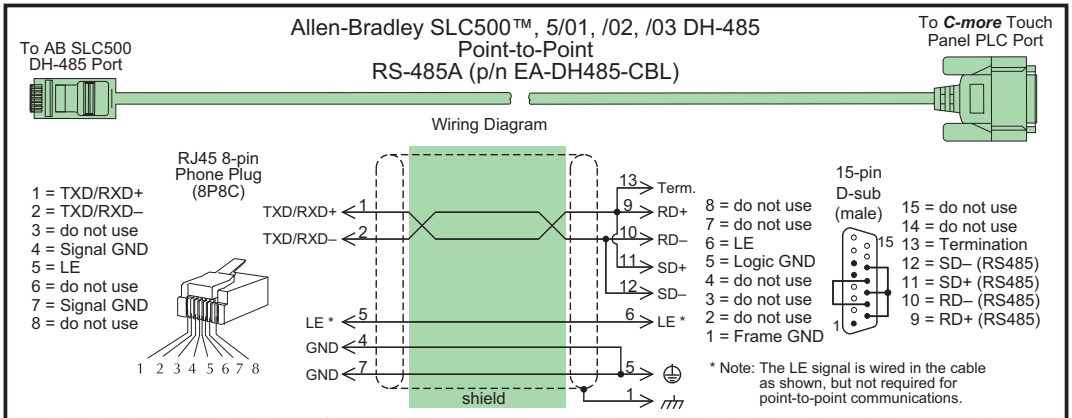

Note: Use the above wiring diagram if you need to make your own cable. We recommend Belden 9842 shielded cable or equivalent.

Allen Bradley SLC500™, 5/01, /02, /03 DH 485/AIC to Multiple ***C-more*** Touch Panels
RS 485A (using ***C-more*** cable p/n EA DH485 CBL)

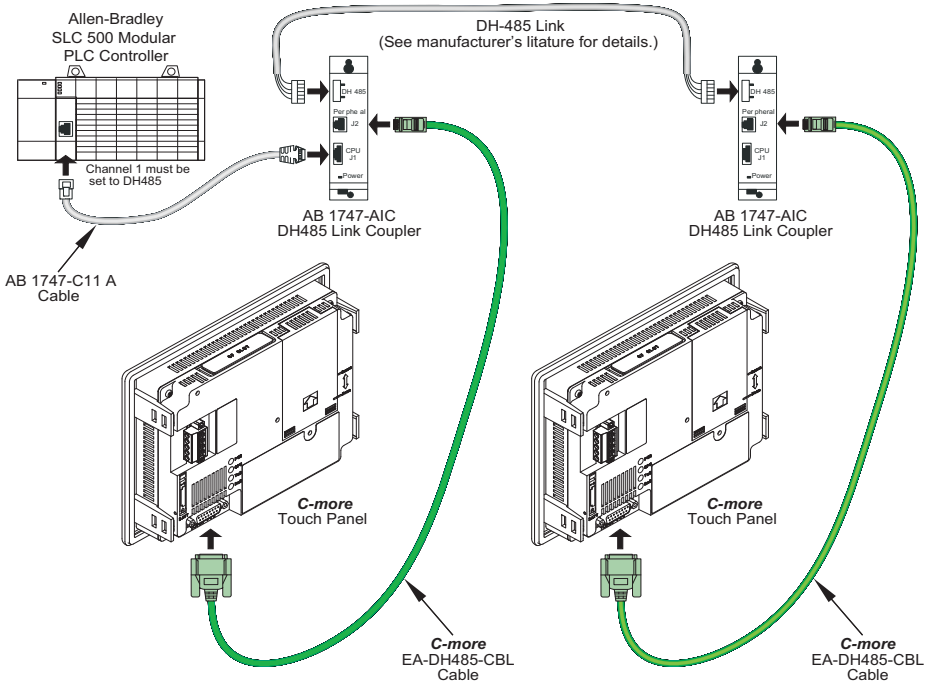

Note: The above diagram shows connecting multiple ***C-more*** touch panels to an Allen-Bradley DH485/AIC network using the AB DH485 Link Coupler, p/n 1747-AIC. Select the "Allen-Bradly DH485/AIC SLC500 MircroLogix" driver in the ***C-more*** Programming Software when starting the project. Also, set the AB channel configuration for DH485.

Allen-Bradley (cont'd):

Allen Bradley SLC500™ 5/03 DH 485/AIC to Multiple ***C-more*** Touch Panels
(using ***C-more*** cables p/n EA MLOGIX CBL, EA SLC 232 CBL)

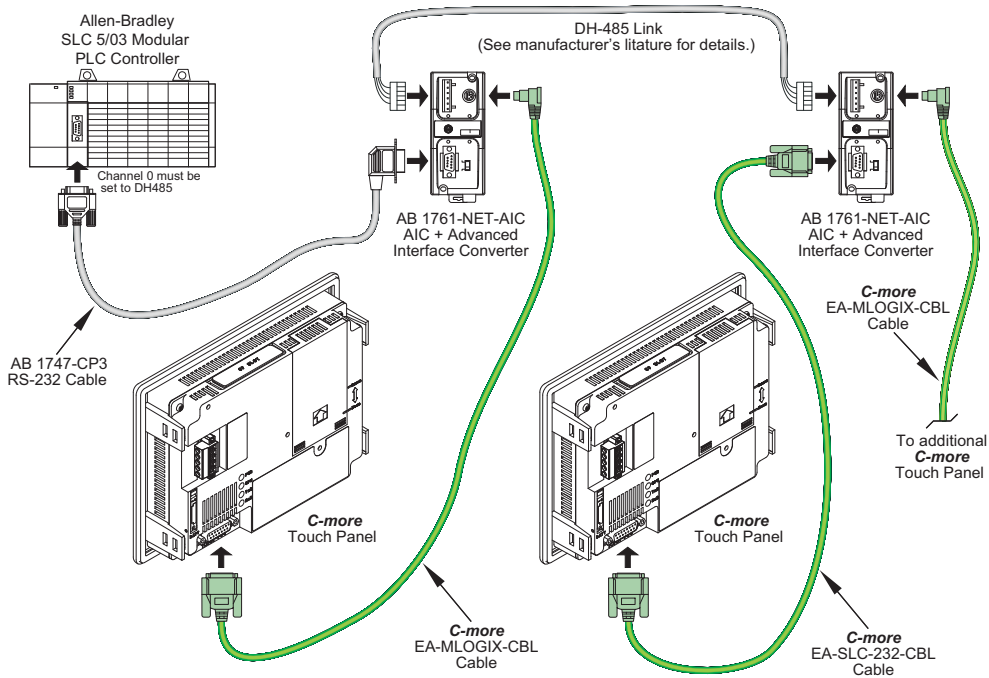

Note: The above diagram shows connecting multiple ***C-more*** touch panels to an Allen-Bradley DH485/AIC network using the AB AIC+ Advanced Interface Converter, p/n 1761-NET-AIC. Select the "Allen-Bradly DH485/AIC SLC500 MircroLogix" driver in the ***C-more*** Programming Software when starting the project. Also, set the AB channel configuration for DH485.

Allen-Bradley (cont'd):

Multiple Allen Bradley PLCs connected to multiple ***C-more*** Touch Panels
(using AB Ethernet Network Interface p/n 761 NET ENI with EtherNet/IP protocol)

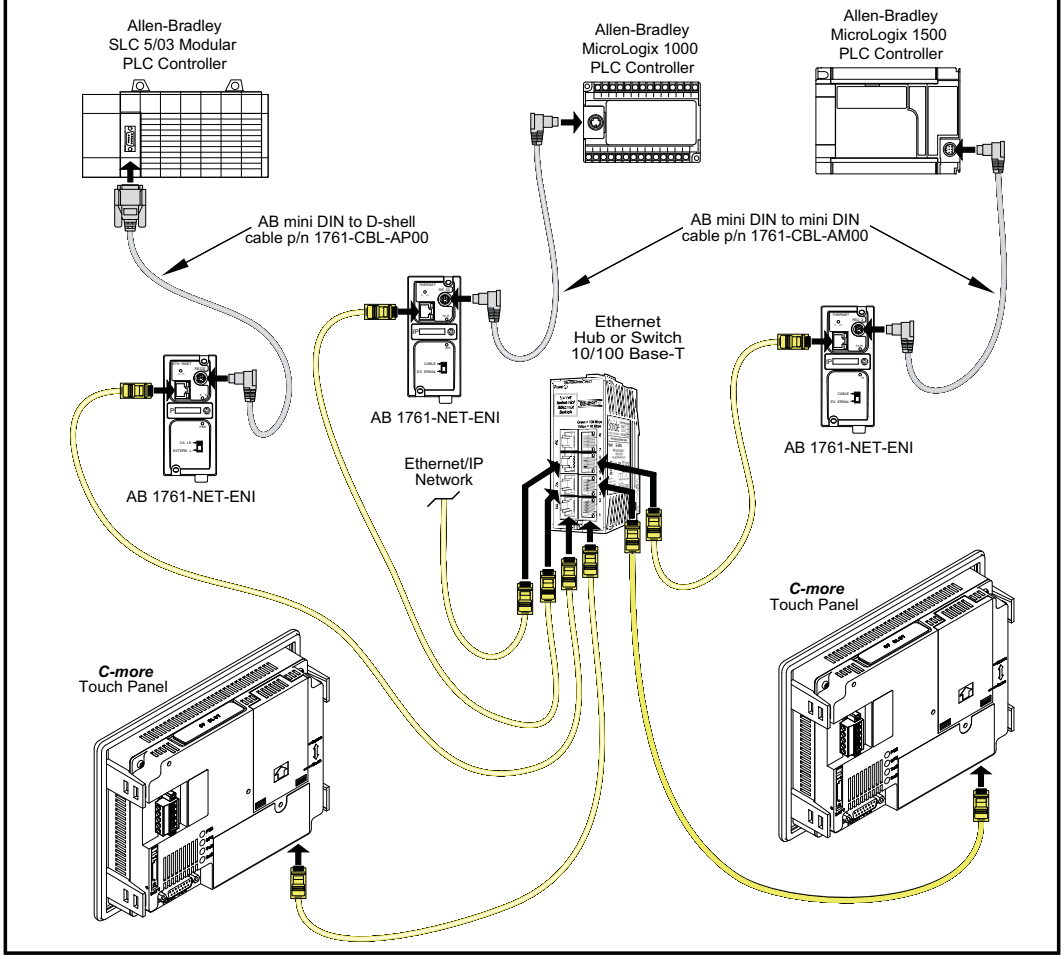

6

GE: EA-90-30-CBL

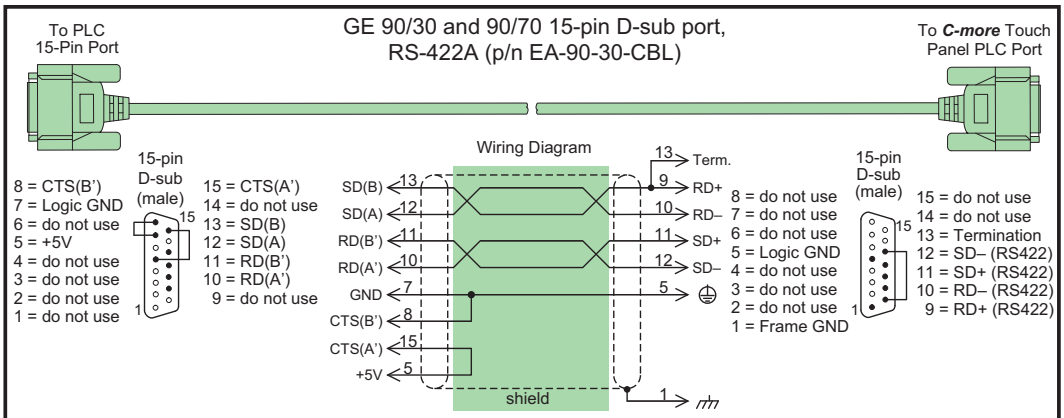

Note: Use the above wiring diagram if you need to make your own cable. We recommend Belden 8103 shielded cable or equivalent.

GE VersaMax Micro: User Constructed

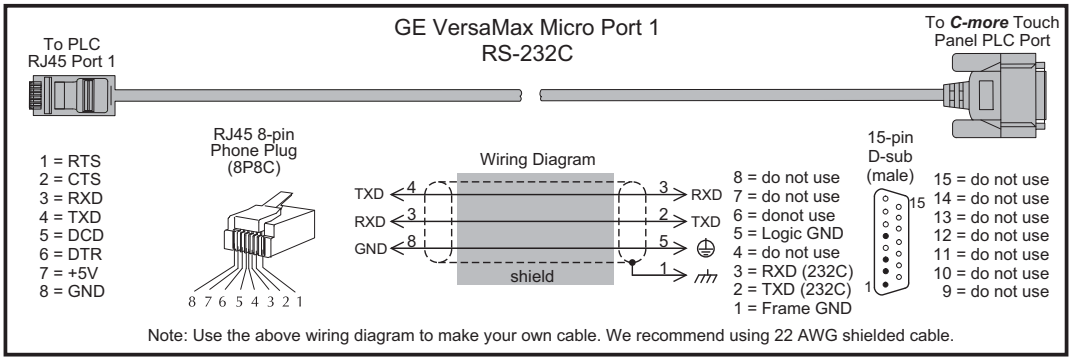

Note: Use the above wiring diagram to make your own cable. We recommend using 22 AWG shielded cable.

Mitsubishi: EA-MITSU-CBL

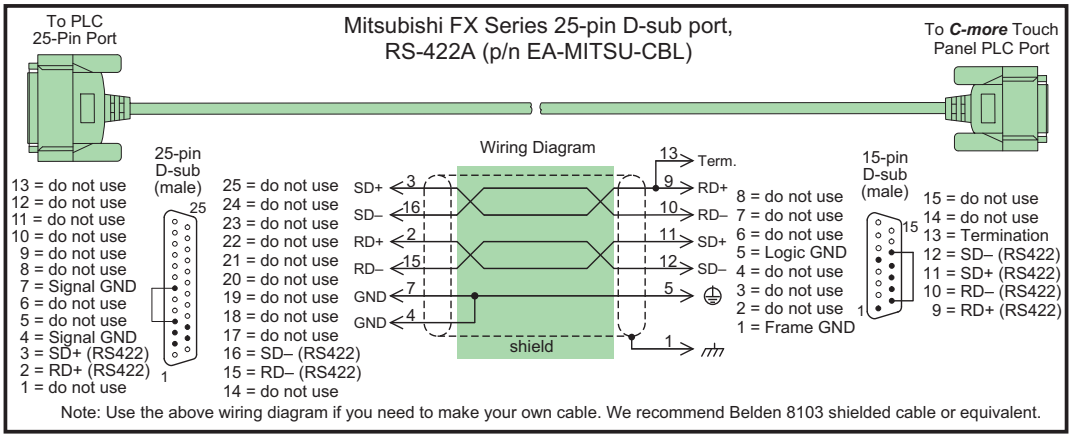

Note: Use the above wiring diagram if you need to make your own cable. We recommend Belden 8103 shielded cable or equivalent.

Mitsubishi(cont'd):

EA-MITSU-CBL-1

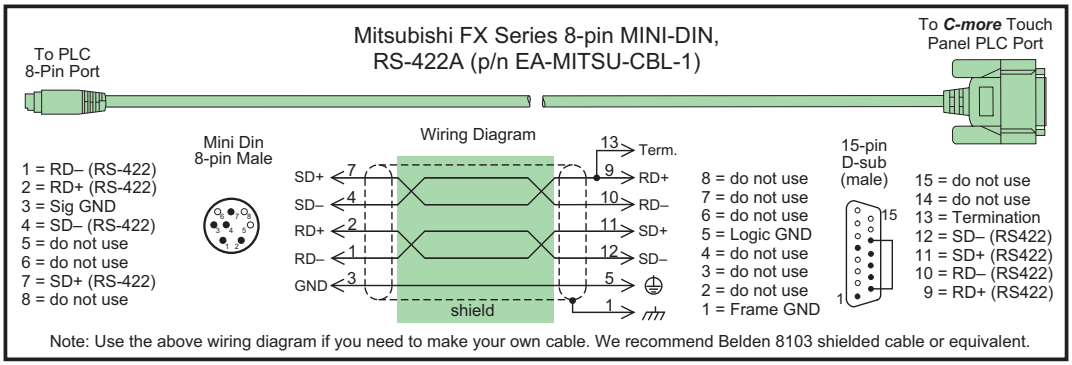

Note: Use the above wiring diagram if you need to make your own cable. We recommend Belden 8103 shielded cable or equivalent.

User Constructed

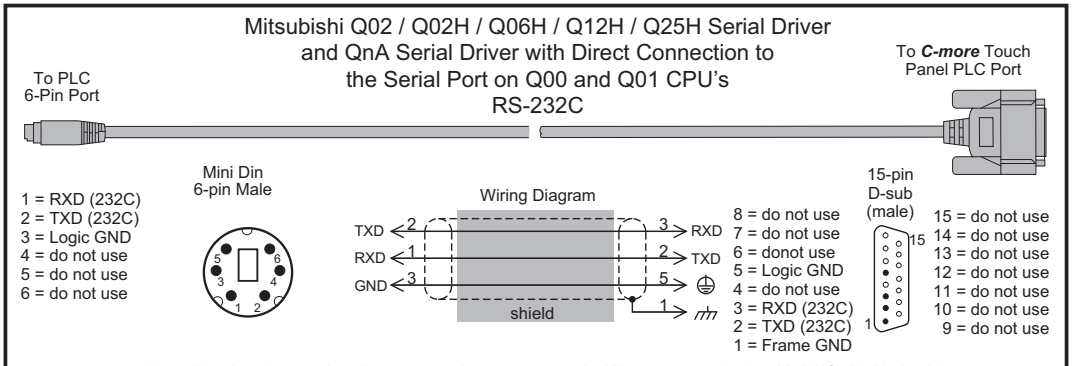

Note: Use the above wiring diagram to make your own cable. We recommend using 22 AWG shielded cable.

User Constructed

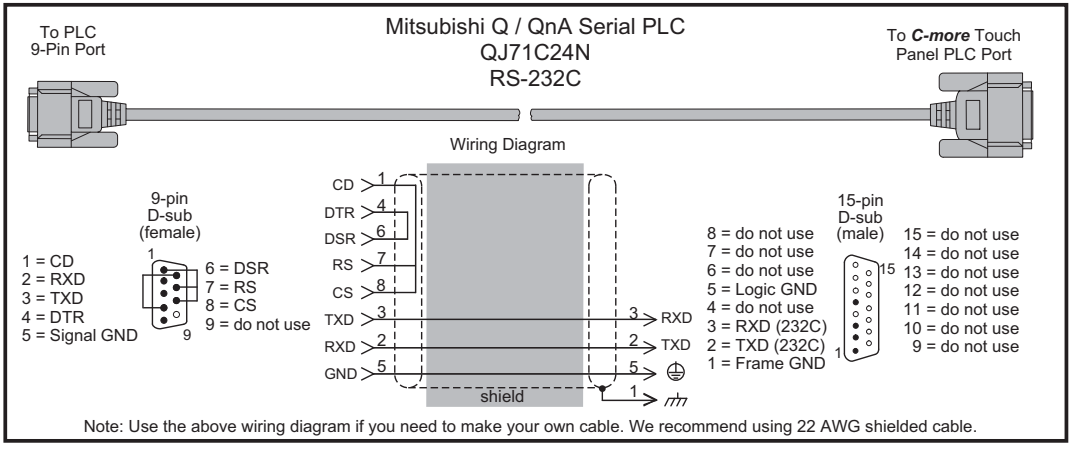

Note: Use the above wiring diagram if you need to make your own cable. We recommend using 22 AWG shielded cable.

Omron:

EA-OMRON-CBL

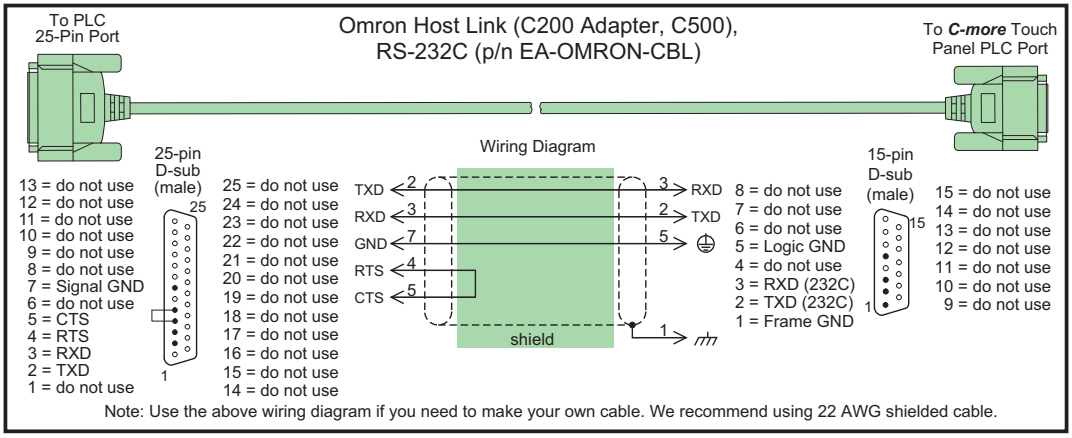

Note: Use the above wiring diagram if you need to make your own cable. We recommend using 22 AWG shielded cable.

User Constructed

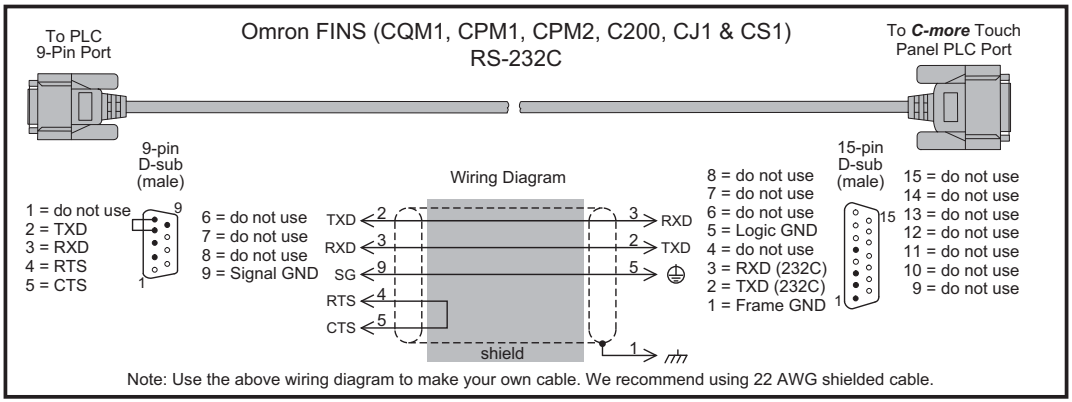

Note: Use the above wiring diagram to make your own cable. We recommend using 22 AWG shielded cable.

User Constructed

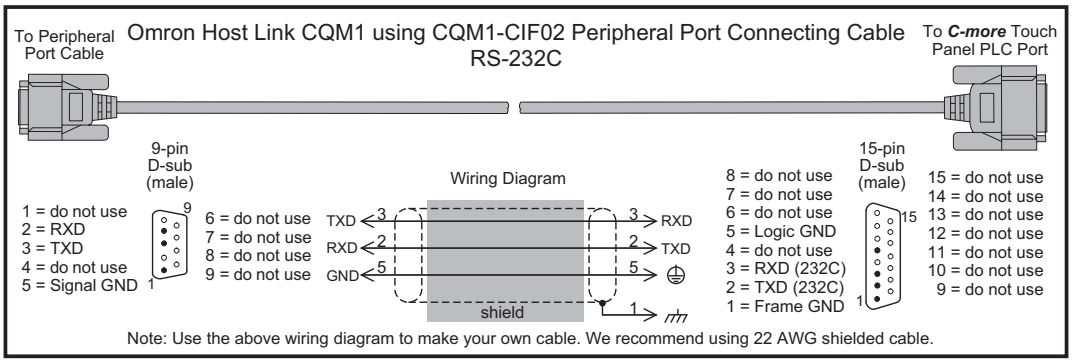

Note: Use the above wiring diagram to make your own cable. We recommend using 22 AWG shielded cable.

Modicon ModBus RS-232:

User Constructed

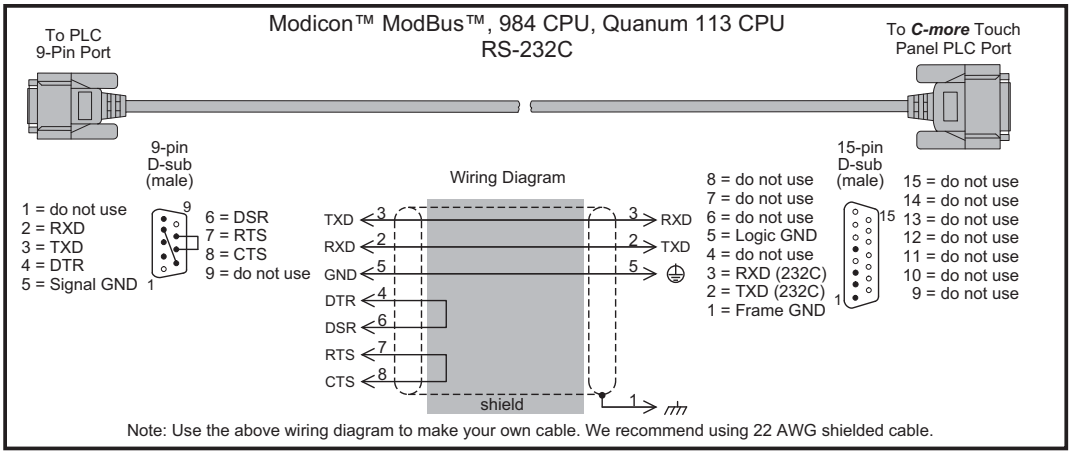

Note: Use the above wiring diagram to make your own cable. We recommend using 22 AWG shielded cable.

Modicon Micro Series:

User Constructed

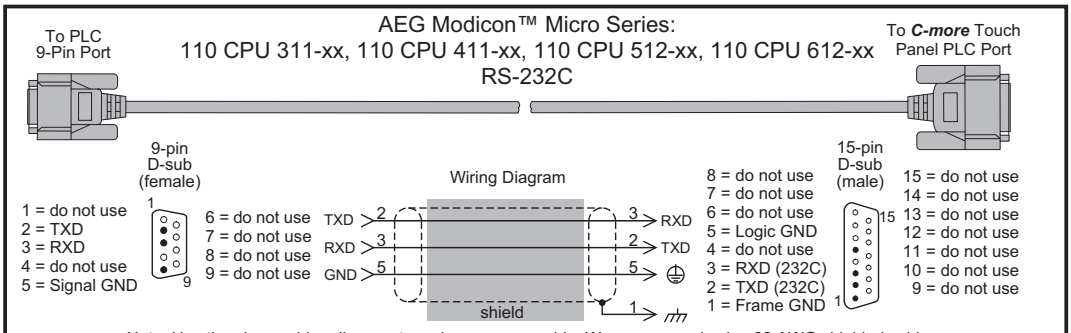

Note: Use the above wiring diagram to make your own cable. We recommend using 22 AWG shielded cable.

Modicon ModBus with RJ45:

User Constructed

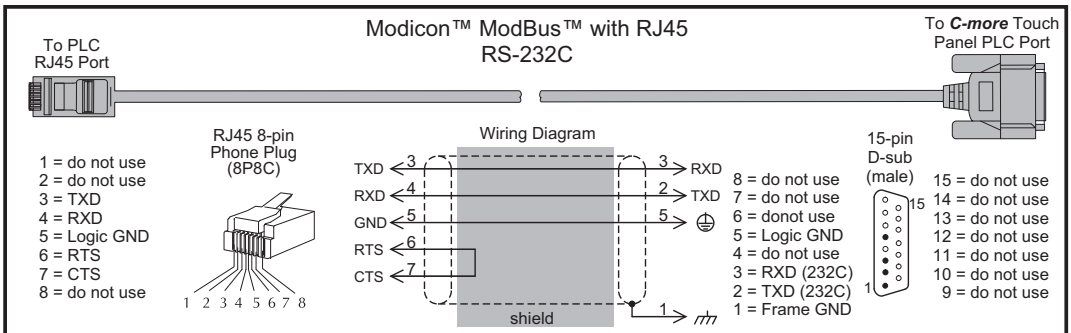

Note: Use the above wiring diagram to make your own cable. We recommend using 22 AWG shielded cable.

Siemens:

User Constructed

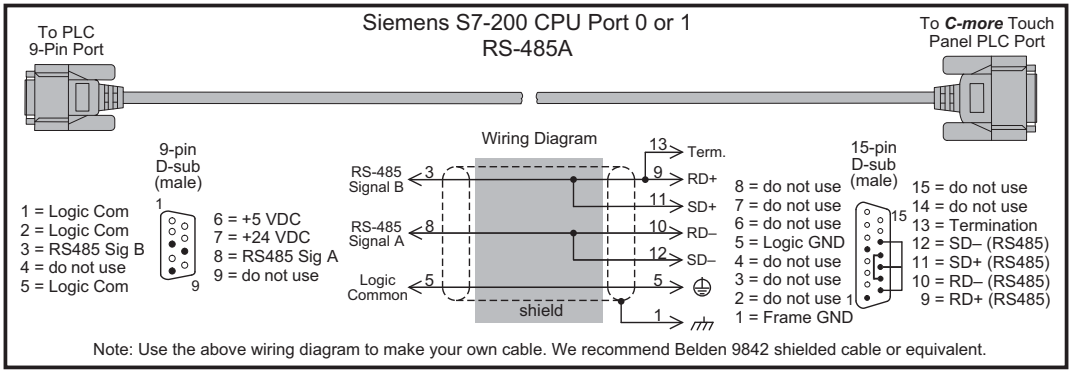

Note: Use the above wiring diagram to make your own cable. We recommend Belden 9842 shielded cable or equivalent.

6

Maintenance

Chapter 7

In This Chapter...

Project Backup 7–2
Check Operating Environment 7–2
Check Operating Voltage 7–2
Check Status Indicators 7–2
Check Physical Conditions 7–3
Run Tests under System Setup Screens 7–3
Check Memory Usage via System Setup Screens 7–4
Check/Adjust Display Brightness or Contrast 7–4
Check Error Log via System Setup Screens 7–4
Adjust Touch Panel via System Setup Screens 7–4
Replace Battery Periodically 7–5
Cleaning the Display Screen 7–5
Check Project Functionality 7–6
Checks from *C-more* Programming Software 7–6

Maintenance

Although the *C-more* touch panels require very little maintenance, setting up a routine maintenance schedule will insure the longevity of the product in your application.

The following are some suggestions of items to include in a preventive maintenance list or schedule. Most of these items should be scheduled quarterly or bi-annually.

Project Backup

- During a routine preventive maintenance schedule is a good time to make sure that there is an up-to-date backup of the application project. Although the *C-more* touch panel with its programming software has the ability to upload the complete project from a panel through the programming software, insurance is warranted just in case the worse case scenario happens and the entire touch panel is destroyed.

Check Operating Environment

- Make sure the touch panel is operating in the proper temperature range: (0 to 50 °C (32 to 122 °F)).
- Make sure the touch panel is operating within the specified humidity range: (10–85% RH, non-condensing).
- Make sure the operating environment is free of corrosive gasses.

Check Operating Voltage

- Check the input voltage that is powering the touch panel to make sure it is within the appropriate range.

DC: If the panel is being powered with a DC power source, then the acceptable range is 20.4 to 28.8 VDC. (24 VDC, -15%, +20%, minimum of 1.5 A)

AC: If the panel is being powered from an AC/DC Power Adapter, EA-AC, then the acceptable input voltage range to the adapter is 100-240 VAC, 50/60 Hertz.

Check Status Indicators

- During a routine maintenance check is a good time to take a quick look at the status indicators on the rear of the touch panel. The Power LED (PWR) indicator should be on and there should be activity on the TxD and RxD LED indicators when connected serially to a PLC or control device. Check the status of the CPU LED and compare it to the chart shown in the illustration below. Any indication of the CPU LED other than a solid green shows there is a possible problem, and the condition needs to be corrected.

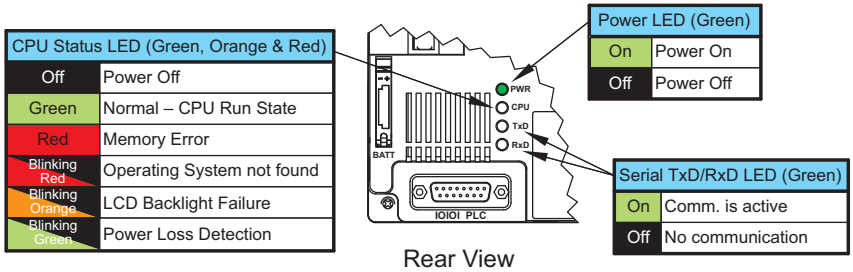

Check Physical Conditions

- Make sure that harmful chemicals are not being used around the panel. Look for any deterioration of the touch panel's bezel and front display area. See **Chapter 2: Specifications** for a chemical compatibility list.
- Check the mounting gasket to make sure it is sealing properly and has not deteriorated. Replace the mounting gasket if there are any signs of deterioration, or if there is any evidence that moisture/liquids have penetrated to the inside of the enclosure where the panel is mounted. Information on a replacement gaskets can be found in **Chapter 9: Replacement Parts**.

- Check to make sure that none of the cooling vents around the inside section of the touch panel are clogged with dust or debris. Also make sure that there is clearance around the touch panel as shown in **Chapter 4: Installation and Wiring**.

Run Tests under System Setup Screens

- Use the touch panel's System Setup Screens to test the touch screen, display, communication ports, beeper and audio output (only with external amplifier and speaker(s) connected). See **Chapter 5: System Setup Screens** for additional details for the **Test Menu**.

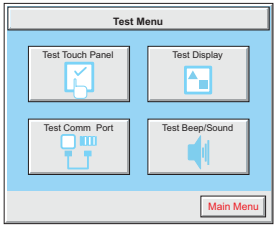

Test Touch Panel - allows the user to check the analog touch function of the screen by drawing free hand lines and shapes across the entire touch area. The display will retain the lines where the screen has been touched until the **Cancel** button is pressed.

Test Display - used to test the display and color rendition. A test pattern will first show both the primary colors (if applicable) and a gray scale. If the touch screen is not pressed within a few seconds, the display will go into alternating color sweeps across the screen until the panel is pressed again. If the screen is pressed when the test pattern first appears, it will stay in this mode until the **Cancel** button is pressed.

Test Comm. Port - used to test the functionality of both the 15-pin PLC communication serial port and the Ethernet port (non -R models only). A loop-back connector can be fabricated and used on the 15-pin serial port to test both the RS-232 and RS-422/485 communications for the TxD and RxD signals and also the RTS and CTS signals if applicable. The **Test Comm. Port** setup screen and **Chapter 5** show pin-outs for the both the RS-232 and RS-422/485 loop-back connectors. The Ethernet connection can also be tested for communications if it is at least connected to an Ethernet hub or switch. If the touch panel is connected to a PLC, then an inquiry test can also be done to test the communications between the panel and the PLC. Press the **Cancel** button when finished to return to the **Test Menu** screen.

Test Beeper/Sound - used to test the touch panel's internal beeper and also test the audio line output port with an external amplifier and speaker(s) connected. Testing the audio output is done by playing an included internal WAV file. Press the **Cancel** button when finished to return to the **Test Menu** screen.

Check Memory Usage via System Setup Screens

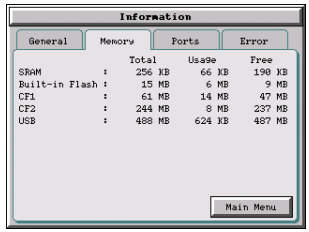

- A good time to check and record the touch panel's memory usage for future reference is during a routine maintenance schedule. The various memory devices being used by the panel are listed under the tab. This includes the SRAM, Built-in Flash and any external memory device such as a USB pen drive or CompactFlash memory. If no external memory device is inserted, it will not show up on the list. The amount of total, used and free memory is shown. The memory usage can be viewed by use of the panel's **System Setup Screen's Main Menu**, and then selecting the **Information** button. Look under the **Memory** tab. See **Chapter 5: System Setup Screens** for additional details on using the **Memory** tab.

Check/Adjust Display Brightness or Contrast

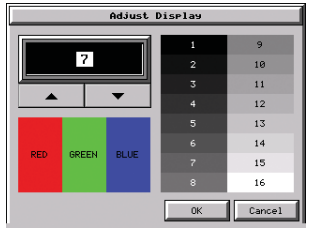

- Is is good practice to occasionally check the display brightness or contrast and adjust as required. This is done by using the **Setting Menu** in the **System Setup Screens**. Keep in mind that only the **contrast** can be adjusted on the STN type display models and only the **brightness** can be adjusted on the TFT type display models. See **Chapter 5: System Setup Screens** for additional details.

Check Error Log via System Setup Screens

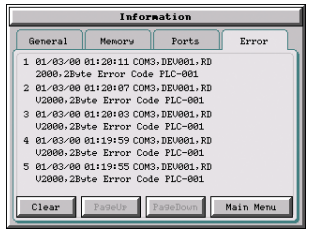

- Another good practice is to review the touch panel's **Error Log**. The log can be viewed by use of the panel's **System Setup Screen's Main Menu**, and then selecting the **Information** button. Look under the **Error** tab. See **Chapter 5: System Setup Screens** for additional details on using the **Error** tab, **Appendix A: PLC Protocol Error Codes** for a list of the error codes as they relate to the specific PLC that is being used with a description of the error, and **Appendix B:Touch Panel Runtime Errors** for a list of errors that may occur when the panel is in operation.

Adjust Touch Panel via System Setup Screens

- It is recommended that a regularly scheduled maintenance program include **adjusting** the touch panel. The adjustment can be looked at as "calibrating" the touch area of the panel. The procedure should also be done anytime that it seems the touch area being pressed for an object is out of position by a small amount. The procedure is done by using the **Setting Menu** in the **System Setup Screens** and then selecting the **Adjust Touch Panel** button. See **Chapter 5: System Setup Screens** for additional details.

Replace Battery Periodically

- The lithium battery in the touch panel is used to maintain the system SRAM retentive memory and the CPU date/time registers when the unit is without external power. Before replacing the battery, back-up the data in your SRAM retentive memory as a precaution. **Input power needs to be maintained to the panel during battery replacement or the SRAM retentive memory and date/time registers will be cleared.** Typical battery life is five years, which includes panel runtime and normal shutdown periods. The battery's status can be checked under the **General** tab of the **Information** screen of the **System Setup Screens**, see **Chapter 5**. However, consider installing a fresh battery if your battery has not been replaced recently and the unit will be without power for a period of more than ten days. A replacement battery can be purchased from ***AutomationDirect*** as part number D2-BAT-1 (#CR2354).

D2-BAT-1

CAUTION - The battery used in this device may present a risk of fire or chemical burn if mistreated. Do not recharge, disassemble, heat above 100 °C (212 °F) or incinerate. Replace battery with AutomationDirect part number D2-BAT-1 or CR2354 only. Use of another battery may present a risk of fire or explosion. Dispose of used battery properly. Keep away from children.

Perchlorate Material, special disposal handling may apply

Cleaning the Display Screen

- The display screen should be cleaned periodically by wiping it with a lint free damp cloth using a mild soap solution. Dry the surface when finished with a lint free cloth. Do not clean with ammonia based products. The ABS material the bezel is made from is reactive with ammonia.
- The longevity of the display can be increased by the use of a non-glare screen protector, p/n **EA-XX-COV2**, where XX = touch panel screen size, 6, 8, 10, 12, or 15. See **Chapter 3: Accessories** for additional information on the screen protectors.

EA-6-COV2

- To prevent damage to the display screen, avoid touching the screen with sharp objects, striking the screen with a hard object, the use of abrasives near the screen, or using excessive force when pressing the touch screen. In the event that the touch screen membrane becomes damaged or scratched, the bezel, which includes the clear membrane window, can be replaced on the 8", 10", 12" and 15" touch panels. See **Chapter 9: Replacement Parts** for additional information on the replacement bezels. The bezel with clear membrane window can be replaced on the 6" touch panels by calling our technical support department at 770-844-4200 to make arrangements for returning the unit for repair.

Check Project Functionality

- During a routine maintenance schedule is a good time to check the functionality of your application, making sure that various areas on different screens do what they were designed to do. An outline or specification for the application is a useful tool for testing the various aspects of your application. As a starting point, you may want to run through all the screens to make sure they are accessible.
- If there are any trouble-shooting procedures built into the touch panel application, now is a good time to also check these aids.

Checks from *C-more* Programming Software

- If you have a PC available with the *C-more* programming software, EA-PGMSW, installed, and the PC is connected to the touch panel, there are checks you can make to the status of the touch panel by using the **Panel Information...** feature located under the **Main Menu** heading **Panel**. This includes the following:
  - Connect Panel Information
  - Memory availability and usage
  - Power Voltage
  - Battery Voltage:
  - Revisions

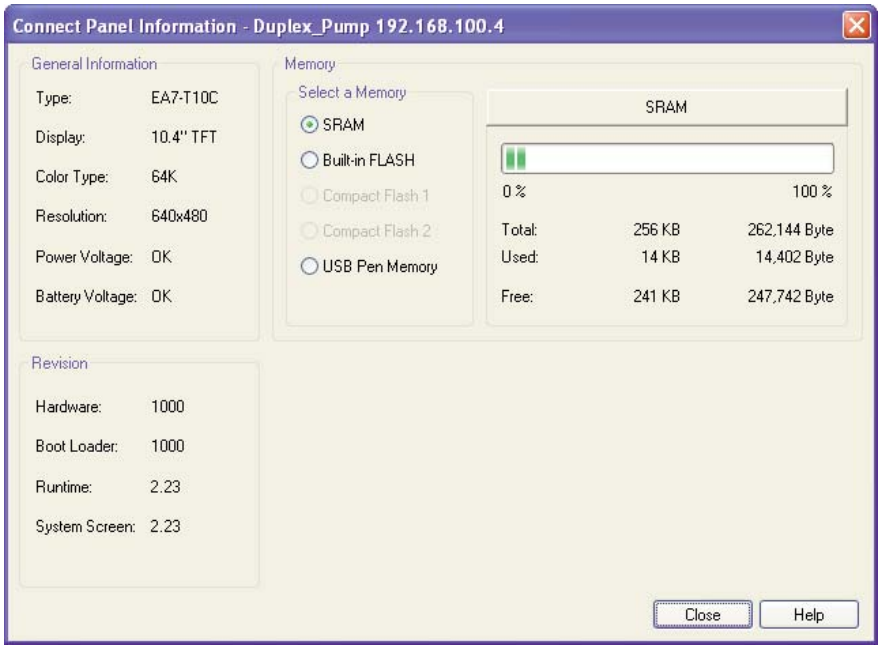

- Other functions that can be accessed from the programming software directly to the touch panel include: **Display Screen**, **Reboot**, **Adjust Clock**, **Memory Clear**, and **Update Firmware**. Additional information for these functions can be found in the *C-more* programming software on-line help.

Notes:

TROUBLESHOOTING

CHAPTER 8

In This Chapter...

Common Problems 8–2
Toubleshooting Flow Chart 8–3
Touch Panel does not Power up 8–4
Display is Blank 8–5
Display is Dim 8–6
No User Program 8–7
No Communications between Panel and PC (Personal Computer) 8–8
No Communications between Panel and PLC 8–13
IP Address in System Setup Screens displays 0.0.0.0 8–16
Difficulty Connecting to the Panel over the Internet (Web server and Remote Access features) 8–17
PLC Protocol Error Codes 8–18
Touch Panel Runtime Errors 8–19
Panel Constantly Displays “Initializing” when Powering up 8–20
Data not Logging Problems 8–20
Loss of Date/Time and Retentive Data 8–21
Electrical Noise Problems 8–21

The following topics are some of the more likely problems that may be encountered during the installation and operation of your *C-more* touch panel. We have made some suggestions on what to check in order to correct the problem. Please start with the troubleshooting flow chart that covers the more common problems encountered by other users.

Common Problems

The troubleshooting flow chart shown on the following page is based on the more common problems fielded by our technical support team. If you are having problems, please start with the flow chart, follow the suggestions listed, and if you still need help, call our tech support team @ 770-844-4200. In addition to having ready the information suggested in the flow chart, please have the following available:

1) *C-more* touch panel part number including serial number with date code. See page 1-5 in this hardware user manual for an explanation of the part number, serial number, and date code breakdown. Why is this information important? The various sizes of the touch panel use different processors and memory sizes, and therefore can have different types of problems within the particular panel size.

2) Programming software version that you are currently using. For example: Version 2.20 (Please note that software versions 2.0.7.35 and before will also have a build number such as 2.0 Build 07.35). Having the software version number will allow our tech support team member to assess whether there are similar problems that have been reported when using the same version of the software. The programming software version can be found by clicking on "**About C-more Programming Software...**" selection under the **Help** pull down menu in the software. Also, it is always a good practice to visit the **Software/Firmware Downloads** area under the Tech Support section of the ***AutomationDirect*** website and check to see if you are using the latest version of the programming software. If you aren't using the latest software version, we suggest that you upgrade to see if this resolves your problem.

Note: *The* ***"About C-more Programming Software..."*** *dialog box will show a Firmware version on the newer releases of the programming software. This is the current firmware version that is included with the programming software and does not reflect what firmware is actually loaded on your* ***C-more*** *touch panel. See the following for details on how to check the firmware version.*

3) Firmware version of the *C-more* touch panel. For example: 2.0 Build 07.32 or 2.0.07.32. The firmware version can be checked by using the **System Setup Screens**, going to the **Information** menu under the **Main Menu**, and looking under the **General** tab for **Firmware: -Runtime**. The firmware version can also be checked by using the programming software, while connected to the panel, and clicking on the **Panel Information** selection under the Panel pull down menu. As with the programming software version, it is important for our tech support associates to know which firmware version you are using so they can check on any known problems. As with the programming software, we strongly suggest that the firmware be updated to the latest version. Check for the latest version and downlaod from the **Software/Firmware Downloads** area of the ***AutomationDirect*** website.

It is also helpful to have a copy of your project file for our tech support associates to use in troubleshooting a problem, so please be prepared to forward a copy of your project if it is requested.

Toubleshooting Flow Chart

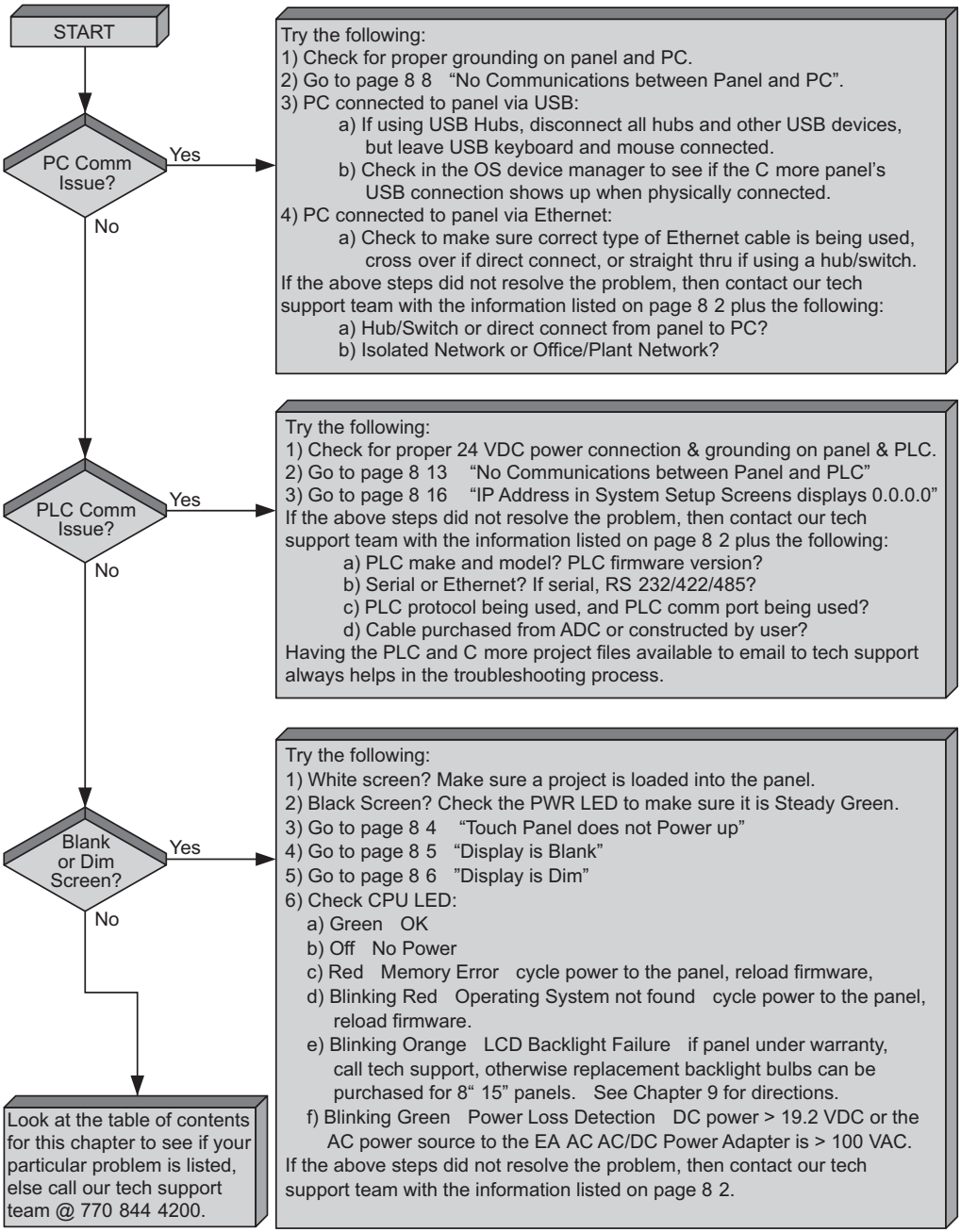

Touch Panel does not Power up

1.) Check the status indicators on the rear of the panel to see if the **Power LED (Green)** indicator is on. Reference the diagram shown below. If the **Power LED (Green)** indicator is on and the panel was observed showing "Initializing..." during power up, but the display is now blank, go to the next troubleshooting tip, **Display is Blank**.

2.) If the **Power LED (Green)** indicator is off and the panel is being powered with a 24 VDC power source, use a voltmeter to check the incoming DC voltage level. The DC voltage level should be in the range of 20.4 to 28.8 VDC. If the incoming DC voltage is zero, check any fusing that may be in the circuit. If the fuse is open, determine cause and replace. If the DC voltage level is out of range, the DC power source needs to be corrected or replaced.

3.) If the **Power LED (Green)** indicator is off and the panel is being powered with an AC/DC Power Adapter, EA-AC, use a voltmeter to check the incoming AC power. The AC voltage to the AC/DC Power Adapter should be in the range of 100 to 240 VAC, 50/60 Hertz. If the incoming AC voltage is zero, check any fusing that may be in the circuit. If the fuse is open, determine cause and replace. If proper AC voltage is present on the AC/DC Power Adapter, but the **Power LED (Green)** indicator is off, replace the AC/DC Power Adapter, EA-AC.

8

C-more LED Status Indicators

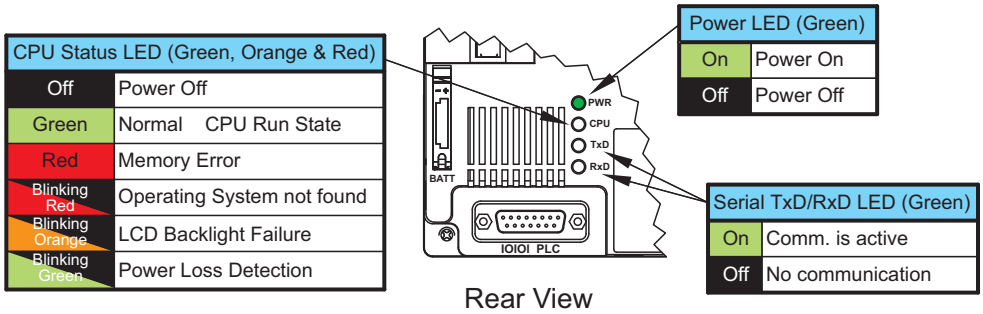

Display is Blank

1.) Touch the screen to make sure the panel is not in the **Screen Saver** mode.

2.) If the panel is not in **Screen Saver** mode, check the status indicators on the rear of the panel.

C-more LED Status Indicators

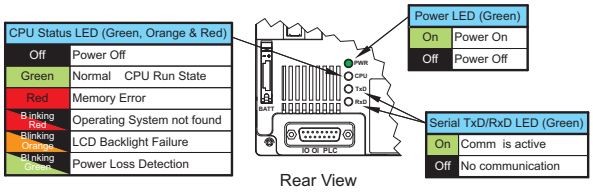

- The **Power LED (Green)** should be on. If not, check the incoming power as explained in the "Touch Panel does not Power Up" section.
- Make sure the **CPU** status **LED (Green, Orange, Red)** is a **steady Green**.
- A **blinking Orange** colored **CPU** status **LED** indicates a failed LCD display backlight. The backlights are user replaceable on the 8", 10", 12" and 15" C-more touch panels. See **Chapter 9: Replacement Parts** for additional information on the replacement backlights.
- If the **CPU** status **LED** is **blinking Green**, then the supply voltage is below 19.2 VDC, or below 100 VAC when using the optional ***C-more*** AC/DC Power Adapter, EA-AC. The backlight will turn off immediately to extend the power retention period. The panel will continue to run and the LCD display will be slightly visible. This may be seen as the display being dim, so it is advisable to check the incoming voltage. The panel does not turn off until the DC voltage drops below 5 VDC or below 58 VAC when using the AC/DC Power Adapter, EA-AC.
- A **blinking Red CPU** status **LED** indicates that the operating system could not be found. Reload the firmware to the touch panel. If this does not resolve the problem, contact the ***AutomationDirect*** returns department @ 1-800-633-0405 to make arrangements for returning the unit for repair.

3.) There is always the remote possibility that a project has been transferred to the touch panel that includes a screen that uses a black background and has no objects placed on the screen. To check for this possibility, access the **Main Menu** of the touch panel **System Setup Screens** by pressing the extreme upper left corner of the panel display area for three (3) seconds as shown below. If the **System Setup Screen's Main Menu** is displayed, then most likely an empty black background screen is being displayed.

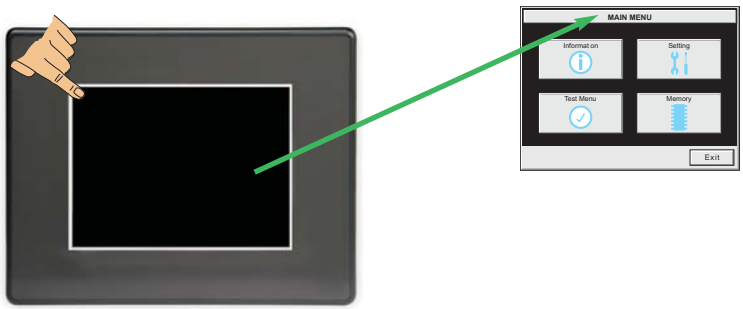

Display is Dim

1.) Check either the contrast or brightness setting found under the System Setup Screens. Keep in mind that the STN type display models can have the contrast adjusted. The TFT type display models can have the brightness adjusted. See **Chapter 5: System Setup Screens** for additional information.

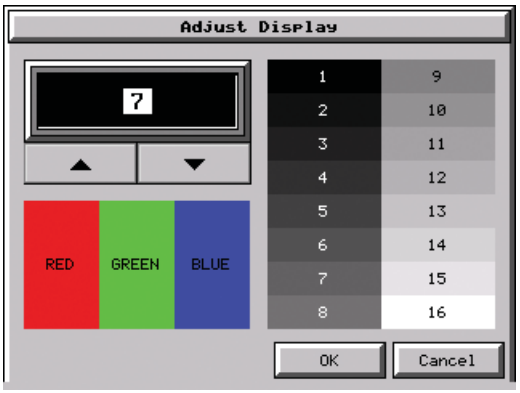

2.) Backlights will slowly lose some luminance causing the display to slightly dim. The backlight average lifetime is rated at 50,000 hours and is defined as the average usage time it takes before the brightness becomes 50% of the initial brightness. The lifetime of the backlight depends on the ambient temperature; the lifetime decreases in low or high temperatures. To improve the backlight life, use the **Start Screen Saver** function that is available in the ***C-more*** Programming Software in the Panel Manager dialog box. The backlights are user replaceable on the 8", 10", 12" and 15" ***C-more*** touch panels. See **Chapter 9: Replacement Parts** for additional information on the replacement backlights.

3.) Another condition that may make the display appear dim is to view the touch panel in direct sunlight or in a location where direct light is reflected onto the display. The ***C-more*** touch panel displays have **Display Brightness** ratings of 150 to 300 cd/m^2 (NITS), depending on the particular model. The higher the cd/m^2 (NITS) rating, the more visible the display will be under bright lighting conditions.

No User Program

If the touch screen is displaying the message “No User Program” after it has powered up, then either:

– the built-in Flash memory does not contain a recognized project, or

– a CompactFlash memory card is plugged into the CF1 slot and there is no project on the CompactFlash memory card. Turn the power off, remove the CompactFlash memory card and turn the power back on.

Keep in mind that on power up, the touch panel will either copy the project from its internal Flash memory to its internal SDRAM memory and run the project, or if a CompactFlash memory card is plugged into the CF1 slot, then any project contained on the CF memory card will be copied to the panel’s internal SDRAM memory and be run. In other words, the memory of a CompactFlash card on CF1 will override the panel’s internal Flash memory on power up or reboot, even if the CompactFlash memory card does not contain a project.

No Communications between Panel and PC (Personal Computer)

The *C-more* touch panel is programmed using the *C-more* Programming Software, EA-PGMSW. The developed project is transferred from the PC to the touch panel by either a USB or an Ethernet connection between the two. (Ethernet available on full feature units only.)

1.) If using USB, then a USB type AB programming cable, such as p/n USB-CBL-AB15, should be used to make a connection between the panel's USB Port, Type B and a USB port on the PC. The *C-more* Programming Software will install a USB driver on the PC during the software installation.

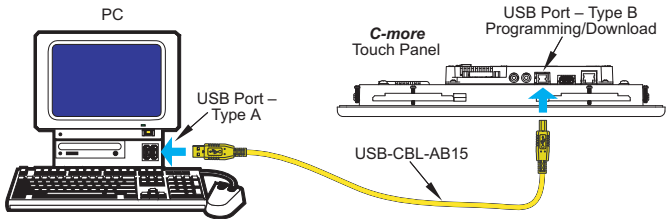

Use the programming software to check the status of the USB communications. From the **Navigation** window, select the **Panel** tab. At the bottom of the **Panel** tab is the **Communication Config** dialog box. If the USB communications to the panel is working, then the USB radio button should be checked and there should be a "green" indicator next to the USB selection. For reference, if the USB driver is working and you open the **Device Manager** in **Windows**, you should see a **"C-more HMI"** USB connection under **Universal Serial Bus controllers** selection. You can also make sure the *C-more* USB driver has been installed by looking for the following file: **C:\WINDOWS\System32\Drivers\kyceusb.sys** If the indicator is "red", then try using a different cable. If replacing the cable does not fix the communications, you may need to try a different USB port on the PC. If there are any USB hubs or other USB devices being used, you may need to temporarily eliminate them to see if this solves the problem.

Note: *When transferring a project to the panel using the* ***Send Project to Panel*** *function, there is a possibility even with a USB programming cable properly connected between the touch panel and PC, and having a green indicator displayed next to the USB radio button in the* ***Step 3 - Project Transfer*** *dialog box, that the* ***Transfer*** *button in the dialog box will still be dim. The green indicator means that the very lowest level of USB communications is connected, but it does not necessarily mean the panel and PC are communicating. If the* ***Transfer*** *button is dim, then the panel and PC are not communicating. If a PLC is connected to the serial port of the panel, try disconnecting it. If this corrects the problem, then check your grounding for the PLC and the panel. If this does not correct the problem, see the* ***C-more*** *Programming Software Installation Guide for reinstalling the USB driver.*

2.) When using an **Ethernet** connection to communicate between the touch panel and the PC and the communications does not seem to be working, the first area to check is the Ethernet status indicators located next to the **10/100 Base-T Ethernet Port** on the rear of the panel. The **Link Status LED** must be displaying a **Steady Green**.

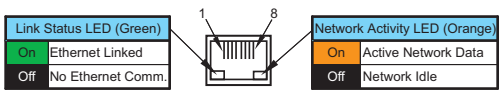

No Communications between Panel and PC (Personal Computer) (cont'd)

If using an **Ethernet** connection to program the touch panel, there are two basic ways to make the connection. You can use a "crossover" **Ethernet** cable to make a direct connection between

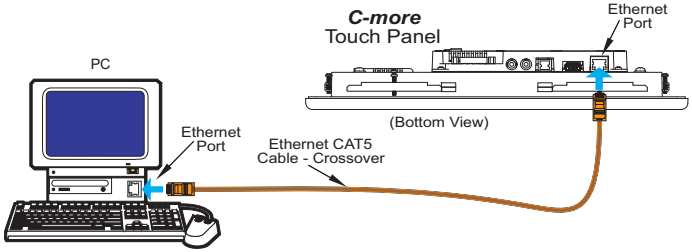

the touch panel and the PC or a "straight-thru" **Ethernet** cable from the touch panel to a hub, switch, etc. that is also connected to the PC.

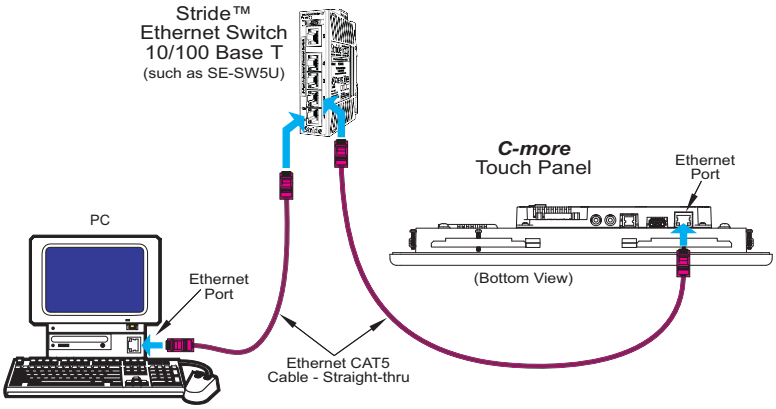

Use the *C-more* programming software to check the status of the **Ethernet** communications. From the **Navigation** window, select the **Panel** tab. At the bottom of the **Panel** tab is the **Communication Config** dialog box. Select the **Browse** button. If the connection is working the panel will be listed in the online link list. Select the panel and then select OK. If the **Ethernet** communications to the panel is working, then the **Ethernet** radio button should be checked and there should be a "green" indicator next to the **Ethernet** selection. There should also be an **IP Address** shown in the browse box below the **Ethernet** selection. If the **Ethernet** radio button is "red", then you will need to check your **Ethernet** cables and connections or **Browse** for the panel. There can also be a conflict with another Ethernet connection that may be using the same **IP Address**. You may want to check the setup both in the touch panel and also in your PC. As a starting point, it is best to start with an assigned IP Address and Subnet mask, mainly to eliminate IP addressing conflicts. Use the *C-more* programming software and open the **Touch Panel Network** dialog box under the **Main Menu's Setup** drop down menu. Click on the **Ethernet Port** tab to display the dialog box used to set up the touch panel's **Ethernet** port.

Another cause of an Ethernet communications problem that may be encountered, is the touch panel doesn't show up in the node list, which can be caused by the PC having a firewall.

No Communications between Panel and PC (Personal Computer) (cont'd)

The figure below shows the **Touch Panel Network** dialog box with the **Ethernet** port tab opened. The **Save settings to Project** check box is checked and we are using the **Use the following IP Address** selection by checking its radio button. **The subnet (192.168.X.X) and the subnet mask (255.255.0.0) must be the same for both the panel and the PC.** See the *C-more* programming software on-line help for additional details regarding the **Touch Panel Network**.

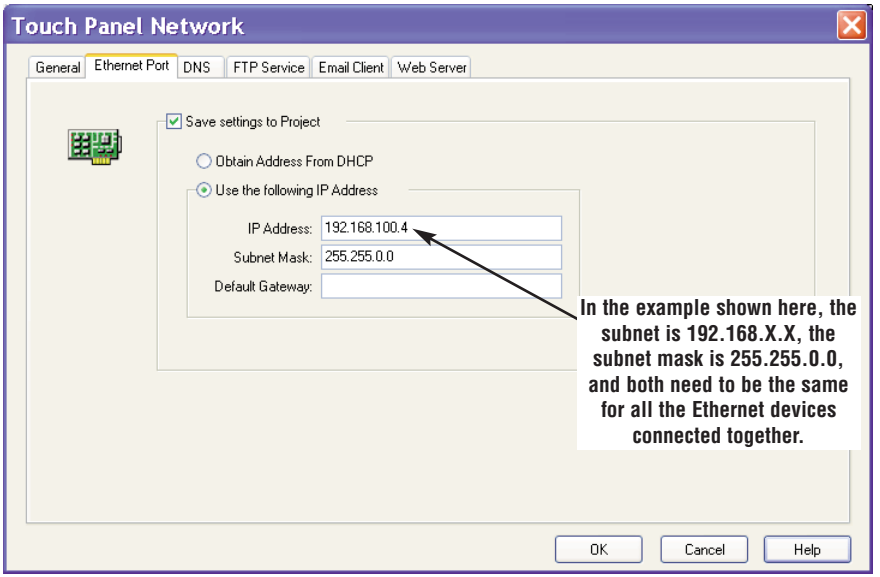

The **IP Address** assigned to the touch panel can also be checked or edited by using the system setup screens built into the touch panel. See **Chapter 5: System Setup Screens** for additional information.

The figure below shows a different example of the panel's **System Setup Screens' Ethernet Port** dialog box for configuring the **Ethernet** port. Again, make sure the subnet (172.22.X.X) and subnet mask (255.255.0.0) is the same for both the panel and the PC.

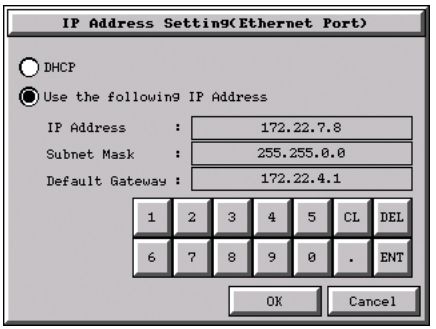

No Communications between Panel and PC (Personal Computer) (cont'd)

Another option for accessing the **IP Address** assigned to the touch panel is to use the ***C-more*** Programming Software. Open the **Navigation** window's **Panel** tab and click on the **Browse** button under the **Communication** window at the bottom. This will open the **Ethernet Connection Setup** window. The **Online Link List** tab will show all of the connected panels. If none are shown, try clicking the **Browse Network** button to search for attached devices. Double click on the **Panel Name** you want to access and this will bring up the **Change IP Address** window. In this window changes can be made to the panel's name, IP address, subnet mask, and default gateway.

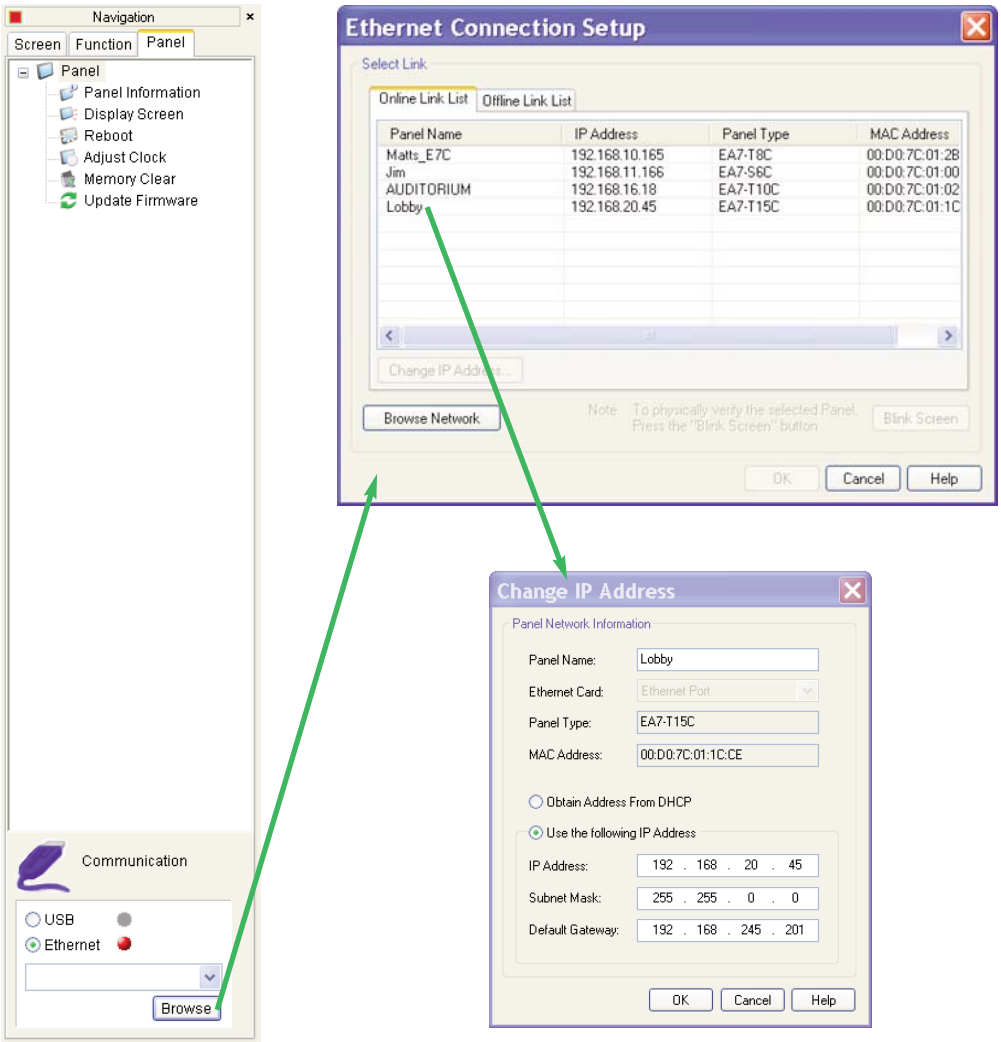

No Communications between Panel and PC (Personal Computer) (cont'd)

Check the **IP Address** setting of the PC by opening the Windows operating system's **Control Panel** and then selecting the **Network Connections** utility. Click on **Properties**, scroll down to **Internet Protocol** (TCP/IP) and click **Properties**. The **Internet Protocol** (TCP/IP) **Properties** dialog box will open. Again, make sure the **Subnet Mask** is set the same for both the panel and the PC and also make sure that the **IP Addresses** do not conflict.

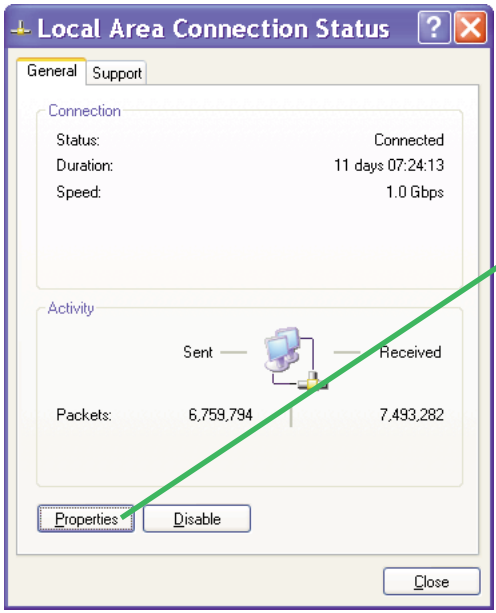

Note: *If a* ***DHCP*** *Server is being used to obtain the* ***IP Address*** *for the PC, there are ways to identify the* ***IP Address****. For example, if using* ***Windows XP****, open a* ***Command Prompt (Run > CMD)*** *and type* ***IPCONFIG /ALL****. A list of all Ethernet assignments for the PC will be shown.*

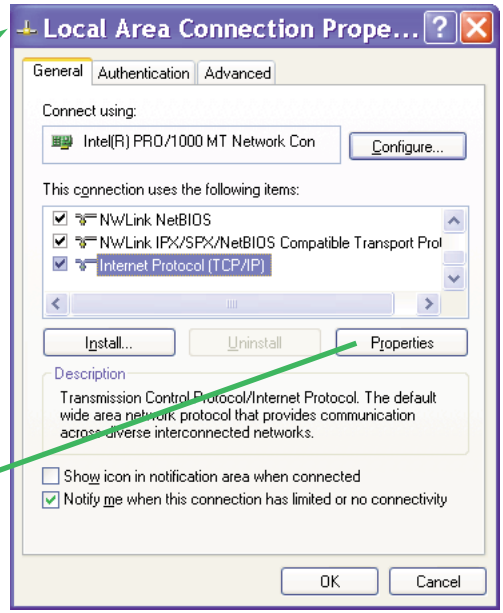

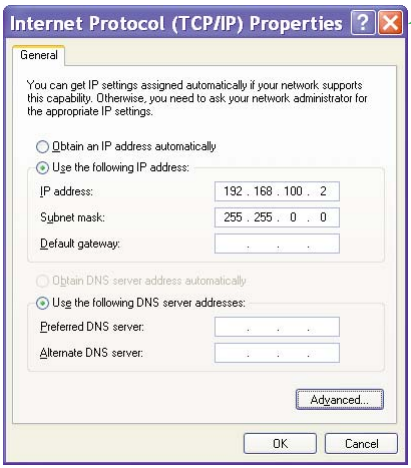

No Communications between Panel and PLC

The communications between the ***C-more*** touch panel and designated PLC or controlling device can be accomplished by either a serial connection to the panel's **15-pin PLC Communications Port** or by an **Ethernet** connection to the panel's **10/100 Base-T Ethernet Port**. (Ethernet available on full feature units only.)

1.) If the touch panel and PLC are connected serially and the communications have seemed to stop working, then first check the **TxD** and **RxD** status indicators on the rear of the panel for activity.

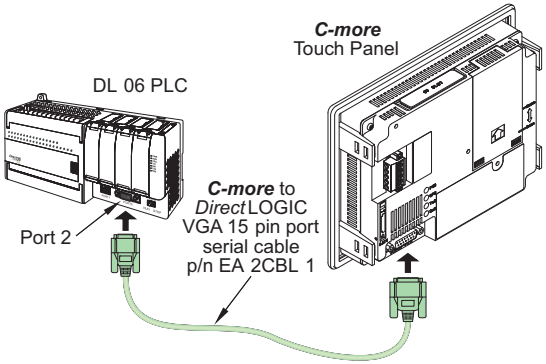

If there is no activity on one or both the **TxD** and **RxD** status indicators, then it should be suspected that either:

- serial comm port settings are incorrect
- the cable is bad and needs to be replaced
- the serial port on the panel is defective
- the PLC serial port is bad

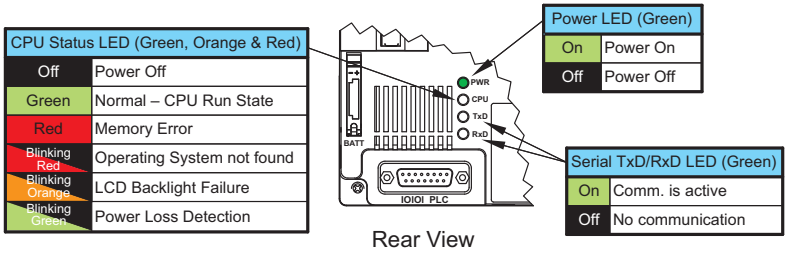

The status indicators will show activity whether the serial communications is wired for RS-232 or RS-422/485.

Electrical noise, pulse generating wiring and/or improper grounding can also cause problems with communications. Refer to the **Electrical Noise Problems** section on page 8-17 for additional help.

(**Serial** connections between the touch panel and PLC continued on next page.)

No Communications between Panel and PLC (cont'd)

The serial port on the *C-more* touch panel can be tested using the panel's system setup screens. Access the **Main Menu** of the panel's system setup screens, press the **Test Menu** button and then press the **Test Comm. Port** button. You will need to fabricate a **Loop Back Connector** for the type of serial connection that is being used in your application, either RS-232 or RS-422/485, per the wiring diagrams shown below. Plug the loop back connector into the panel's 15-pin PLC serial communications port and then press the **Loop Back Test** button to run the test. See **Chapter 5: System Setup Screens** for additional information.

Loop back connector wiring diagrams:

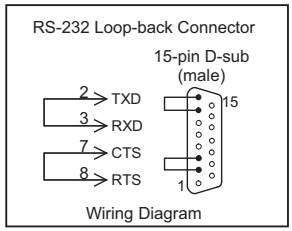

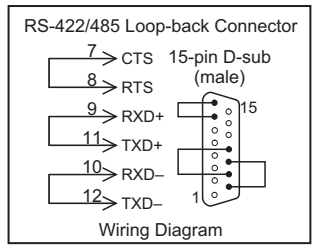

System setup screens **Test Comm. Port** dialog boxes:

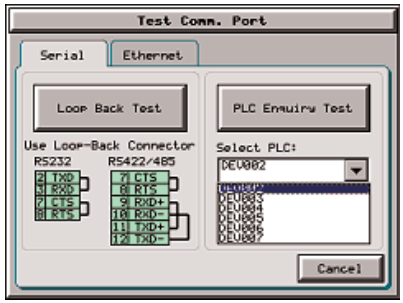

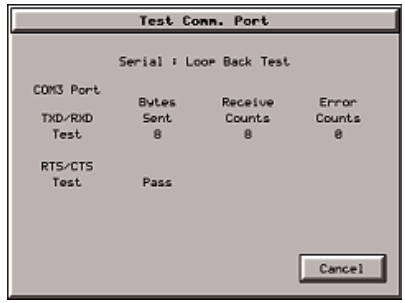

The **PLC Enquiry Test** can also be performed to determine if the **Ethernet** communication is working correctly between the panel and designated PLC .

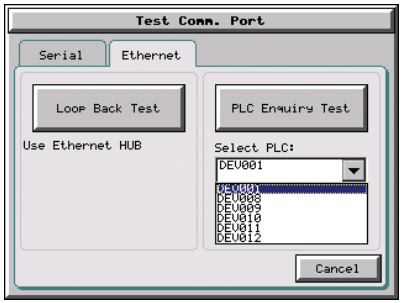

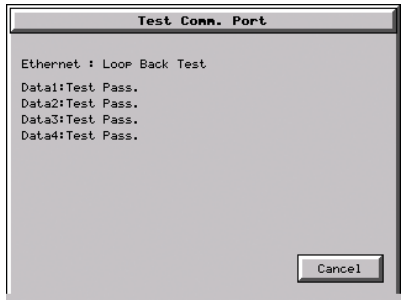

(**Ethernet** connections between the touch panel and PLC continued on next page.)

No Communications between Panel and PLC (cont'd)

2.) If using an **Ethernet** connection between the touch panel and the PLC, and there is a problem with the communications, the first area to check is the **Ethernet** status indicators located next to the **10/100 Base-T Ethernet Port** (shown below) on the rear of the panel.

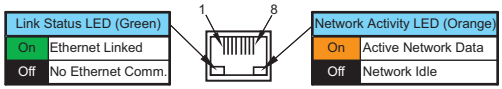

There are two basic ways to make the connection. You can use a crossover **Ethernet** cable (shown below) to make a direct connection between the touch panel and the PLC or a

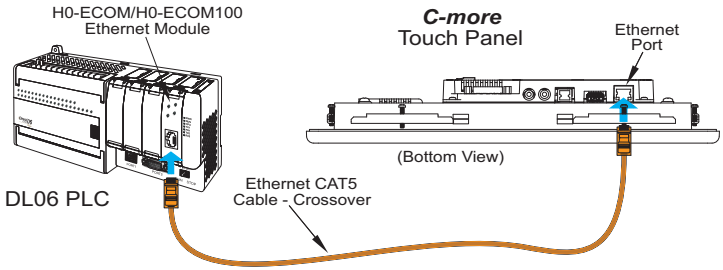

regular **Ethernet** cable (shown below) from the touch panel to a hub, switch, etc. that is also connected to the PLC.

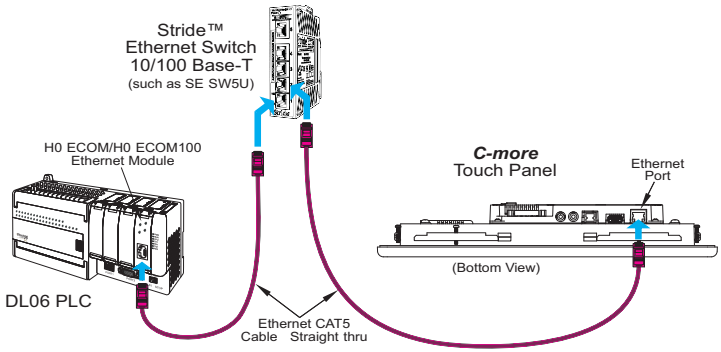

Check the status indicators that may be included with the **Ethernet** communications module or device that is part of the PLC. Refer to the PLC's Ethernet user manual for further troubleshooting information.

(**Ethernet** connections between the touch panel and PLC continued next page.)

No Communications between Panel and PLC (cont'd)

The **Ethernet** port on the *C-more* touch panel can be tested by using the panel's system setup screens. Access the **Main Menu** of the panel's system setup screens, press the **Test Menu** button and then press the **Test Comm. Port** button. Select the Ethernet tab in the Test Comm. Port dialog box, make sure the Ethernet port is connected to an Ethernet hub or other Ethernet communications device, and then press the **Loop Back Test** button to run the test. See **Chapter 5: System Setup Screens** for additional information.

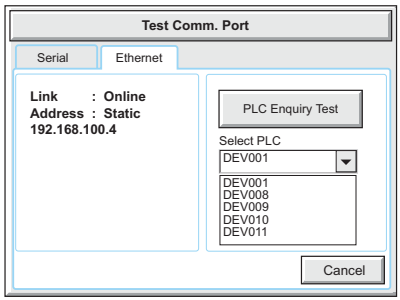

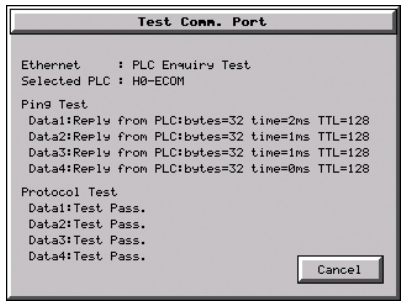

8

If a PC running the *C-more* programming software is connected to the **Ethernet** network that is also connected to both the touch panel and PLC, then certain functions in the software, such as the **Main Menu's Setup** drop down selection for **Panel Manager** or **Touch Panel Network** and the **Main Menu's Panel** drop down selection for **Panel Information**, can be used to help troubleshoot problems with the touch panel's communications and operation. See the *C-more* programming software's on-line help for additional information.

IP Address in System Setup Screens displays 0.0.0.0

Note: *If entering an* ***IP Address*** *for the* ***C-more*** *touch panel using the* ***System Setup Screens****, and the IP Address keeps displaying 0.0.0.0, even after entering an IP address, the panel is not functionally connected to an active network. Either the cable, hub, or switch is bad. The entered* ***IP Address*** *is stored in the panel's memory, but won't show up until a good connection is established. Keep in mind that if in the* ***C-more*** *programming software's* ***Touch Panel Network*** *dialog box, under the* ***Ethernet Port*** *tab, you have checked the* ***Save settings to Project*** *check box and have entered an* ***IP Address*** *of 0.0.0.0, then anytime the project is transferred to the panel, the panel's* ***IP Address*** *will be overwritten with the entered address.*

Difficulty Connecting to the Panel over the Internet (Web server and Remote Access features)

1) Refer to the software help file topics **Tough Panel Network** and **Remote Access Setup** for information on configuring the Remote Access accounts, the Web Server Function and the panel IP Attributes.
2) In the Ethernet Port tab if DHCP is selected for assigning the IP address, verify the currect address of the panel. The IP address assigned by DHCP may change over time.
3) Note that the Web Server Function must be enabled on the Web Server tab before the Remote Access Server Function can be accessed on the panel.
4) Verify that the correct TCP ports have been opened on the router controlling access to the network where the C-more panel resides.
5) If two C-more panels are on a network behind a firewall and they have the same **Remote Access port number**, the router will use the first entry in the Port Forwarding setup that it encounters. The same C-more panel will always come up even if the two panels have two different Web Server Port numbers.
6) When entering the URL in Internet Explorer to connect the C-more web server using a port number other than the default (80), be sure to use the full URL text including the prefix "http://". The URL should be http://xxx.xxx.xxx.xxx:aaaaa where xxx.xxx.xxx.xxx is the IP address of the panel and aaaaa is the port number configured in the Web Server tab of the Touch Panel Network setting.

PLC Protocol Error Codes

The *C-more* touch panel includes built-in PLC communication protocol diagnostics that monitor the exchange of data between the panel and the PLC. The diagnostics look for the proper exchange of data, correct handshaking signals, addressing errors, incorrect data bytes, wrong packet format, etc. The diagnostics also monitor and report any of the errors that the designated PLC would normally generate if there is a problem with the PLC's communications. Each brand of PLC has its own unique set of diagnostic errors that are typically communicated over the PLC's communications port. The PLC generated errors are interpreted by the *C-more* software. See the PLC manufacturer's user manuals for additional details on the designated PLC's errors.

If a *C-more* communications error does occur, the error message will be displayed in the upper left of the *C-more* screen and the **Error Code** is recorded in the panel's error log. If a PLC error occurs, the PLC error code number will appear across the top of the screen, the PLC error message may not be included in some cases. The error log can be viewed using the system setup screens. See **Chapter 5: System Setup Screens** under the **Information** window to bring up the **Error** tab which includes a description of the logged data.

A detailed list and description of the various PLC protocol errors can be found in **Appendix A: PLC Protocol Error Codes**.

PLC Protocol Error Codes example:

Error Codes for *Direct*LOGIC – K-Sequence		
Error Code	**Error Message**	**Description**
PLC-001	PLC Communication Timeout (for single PLC) %Device% PLC Communication Timeout (for multiple PLCs, such as RS-422/485)	A timeout occurred after sending a request to the PLC %Device%. %Device% indicates the device name, such as DEV001. Example error message for multiple PLCs: DEV001 PLC Communication Timeout
PLC-002	NAK received from PLC	A negative acknowledgement (NAK) control code has been generated during a read/write request.
PLC-004	STX is not found	A Start of Text (STX) control code was not found in the data packet received from the PLC.

Touch Panel Runtime Errors

The *C-more* touch panel includes built-in diagnostics that check for proper operation of the panel when it is running a project that has been transferred to its memory. Faults detected while the panel is running will produce a "Runtime" error. These errors are displayed in the upper left of the panel's display and are also recorded in the panel's error log. The error log can be viewed using the system setup screens. See **Chapter 5: System Setup Screens** under the **Information** window to bring up the **Error** tab which includes a description of the logged data.

A detailed list and description of the various touch panel runtime errors can be found in **Appendix B: Touch Panel Runtime Errors**.

Touch Panel Runtime Errors example:

No.	Error Log Code	Error Message Located at upper left of screen	Error Message Tag	Tag Error Code Value	System Screen Info > Error	Cause
Log Error						
1	RTE-001	Log Failed. Not enough Memory Space in %Device%	SYS ERR ERRORCODE	2001	MM/DD/YY HH/MM/SS Error Code RTE-001	The size of the destination memory is not large enough to store the data.
2	RTE-002	Log Failed. %Device% cannot be found	SYS ERR ERRORCODE	2002	MM/DD/YY HH/MM/SS Error Code RTE-002	No device available or the device is defective.
Battery						
1	RTE-031	Low Battery	SYS ERR ERRORCODE	2031	MM/DD/YY HH/MM/SS Error Code RTE-031	The panel's backup battery voltage level has fallen below 1.8 VDC and should be replaced.

Panel Constantly Displays "Initializing" when Powering up

If the touch panel constantly displays a message reading "Initializing" while powering up, then check the following possible causes.

1.) The project that is loaded into the panel's internal SDRAM memory is corrupted. Either use the ***C-more*** programming software to clear the panel's memory and re-transfer the project to the touch panel, or press the upper left corner of the touch panel screen while powering up to bypass the project and go directly to the **System Setup Screen** menu. Select the **Memory** menu, and use either the **Clear Memory** or **Set to Factory Default** utility to clear the panel's memory and re-transfer the project to the touch panel.

2.) A CompactFlash memory card has been plugged into the CF1 slot and the CompactFlash either has no project stored on it or the project is corrupted. Remove the CompactFlash memory card form the CF1 slot and either load the project to the panel's internal Flash memory, or use a CF card reader connected to a PC to clear and re-format the CompactFlash card, or try a different CompactFlash memory card.

Note: *In the Error Log you may find the error RTE-500 - Check Sum Error, which is defined as "Memory in the panel has been corrupted by power loss, etc." If this is the case, try cycling power to the panel, re-transfer the project to the panel, and re-transfer the firmware, etc. in sequential steps to try to correct the problem.*

Data not Logging Problems

If the data log is missing entries, or a Runtime Error for the Log Errors as shown in **Appendix B: Touch Panel Runtime Errors** is seen, then check the following possible causes.

1.) Check that the memory devices, that were selected for **Data Storage** under the ***C-more*** programming software's **Main Menu - Setup** drop down - **Panel Manager** dialog box, are plugged into their proper location. Alarms, messages and screen captures can be independently selected to be saved to either a USB pen drive plugged into the USB Port - Type A, or a CompactFlash memory card plugged into CF1 or CF2. (Full feature units only.)

2.) The memory device could be bad. If possible, check it by plugging it into a PC that has the ability to access the memory device. Also, not all USB devices are compatible with the ***C-more*** touch panels. Try using the ***AutomationDirect*** USB Pen Drive, p/n SDCZ4-2048-A10. Check **System Screen**, **Memory** for the presence of the USB device inserted.

Loss of Date/Time and Retentive Data

If power is cycled to the *C-more* touch panel and it is then noticed that either the **Date/Time** of the panel is no longer correct, or any data that has been setup to be retentive is inaccurate, most likely the backup battery is exhausted and needs to be replaced. See **Chapter 9: Replacement Parts** for additional information on replacing the panel's battery.

D2-BAT-1

CAUTION - The battery used in this device may present a risk of fire or chemical burn if mistreated. Do not recharge, disassemble, heat above 100 °C (212 °F) or incinerate. Replace battery with AutomationDirect part number D2-BAT-1 or CR2354 only. Use of another battery may present a risk of fire or explosion. Dispose of used battery properly. Keep away from children.

Perchlorate Material, special disposal handling may apply

Electrical Noise Problems

Noise is one of the most difficult problems to diagnose. Electrical noise can enter a system in many different ways which fall into one of two categories, conducted or radiated. It may be difficult to determine how the noise is entering the system but the corrective actions for either of the types of noise problems are similar.

- Conducted noise is when the electrical interference is introduced into the system by way of an attached wire, panel connection, etc. It may enter through a power supply connection, the communication ground connection, or the chassis ground connection.
- Radiated noise is when the electrical interference is introduced into the system without a direct electrical connection, much in the same manner as radio waves.

While electrical noise cannot be eliminated, it can be reduced to a level that will not affect the system.

- Most noise problems result from improper grounding of the system. A good earth ground can be the single most effective way to correct noise problems. If a ground is not available, install a ground rod as close to the system as possible. Ensure all ground wires are single point grounds and are not daisy chained from one device to another. Ground metal enclosures around the system. A loose wire can act as a large antenna, introducing noise into the system. Therefore, tighten all connections in your system. Loose ground wires are more susceptible to noise than the other wires in your system. Review **Chapter 4: Installation & Wiring** if you have questions regarding how to ground the touch panel.
- Electrical noise can enter the system through the power source for the touch panel. Installing a properly wired isolation transformer (neutral grounded) for all AC sources can help the problem, but only if wired correctly. DC sources should be well-grounded good quality supplies.
- Never run communication cables or low-voltage power wiring close to high voltage wiring or pulse generating wiring that controls such devices as solenoids, servos, VFOs, etc.

Replacement Parts

Chapter 9

In This Chapter...

Replacement Parts Overview 9–2
Replacement Parts at a Glance 9–2
Battery Replacement & Installation Instructions 9–3
6″ Panel Mounting Clip Replacements & Installation 9–5
8-15″ Panel Mounting Clip Replacements & Installation 9–6
DC Panel Power Connector Replacement 9–7
AC Power Adapter Connector Replacement 9–7
8-15″ Panel Backlight Bulb Replacements & Installation 9–8
6-15″ Panel Gasket Replacement & Installation 9–11
8-15″ Panel Bezel Replacement & Installation 9–12
6″ Adapter Plate Gasket Replacement & Installation 9–14

Replacement Parts Overview

Part Number	Description	Part Number	Description
D2-BAT-1	Battery Replacement	EA-12-GSK	12" Panel Gasket Replacement
EA-BRK-1	6" Panel Mounting Clip Replacements (2 per pk.)	EA-10-GSK	10" Panel Gasket Replacement
EA-BRK-2	8-15" Panel Mounting Clip Replacements (8 per pk.)	EA-8-GSK	8" Panel Gasket Replacement
EA-DC-CON	DC Panel Power Connector Replacement	EA-6-GSK	6" Panel Gasket Replacement
EA-AC-CON	AC Power Adapter Connector Replacement	EA-15-BEZEL	15" Panel Bezel Replacement
EA-15-BULB	15" Panel Backlight Bulb Replacement	EA-12-BEZEL	12" Panel Bezel Replacement
EA-12-BULB	12" Panel Backlight Bulb Replacement	EA-10-BEZEL	10" Panel Bezel Replacement
EA-10-BULB	10" Panel Backlight Bulb Replacement	EA-8-BEZEL	8" Panel Bezel Replacement
EA-8-BULB	8" Panel Backlight Bulb Replacement	EA-6-ADPTR-GSK	6" Adapter Plate Gasket Replacement
EA-15-GSK	15" Panel Gasket Replacement		

Replacement Parts at a Glance:

9

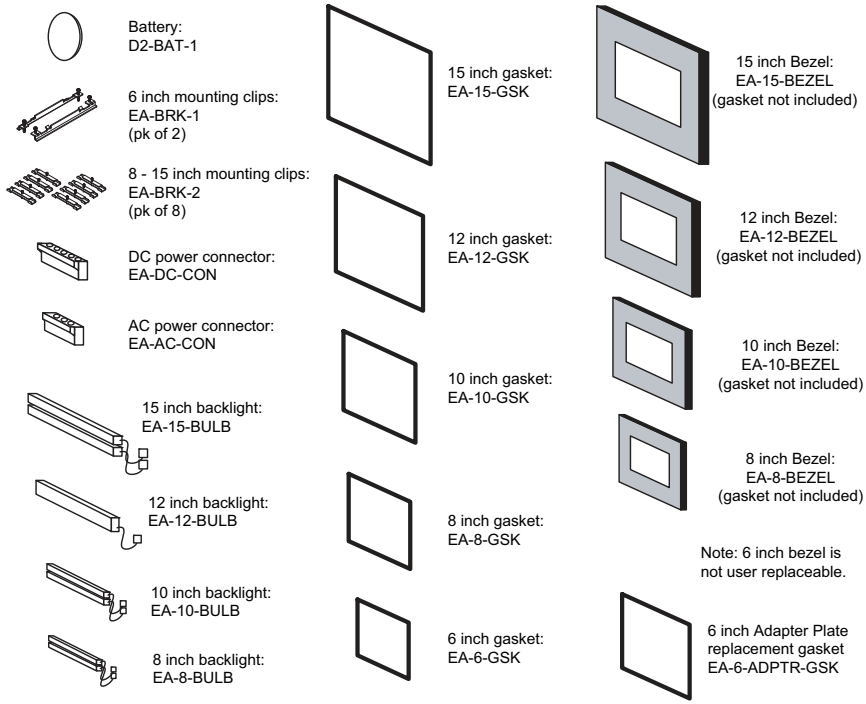

Battery Replacement – D2-BAT-1

CAUTION - The battery used in this device may present a risk of fire or chemical burn if mistreated. Do not recharge, disassemble, heat above 100 °C (212 °F) or incinerate. Replace battery with AutomationDirect part number D2-BAT-1 or CR2354 only. Use of another battery may present a risk of fire or explosion. Dispose of used battery properly. Keep away from children.

Perchlorate Material, special disposal handling may apply

The ***C-more*** touch panels are supplied with a SRAM retentive memory backup battery that also is used to backup the internal CPU date/time registers. The battery should be replaced every 5 years or during any routine maintenance to the touch panel. As a note, the battery used in the ***C-more*** touch panels is the same battery that is used for backup in ***AutomationDirect's*** DL06, D2-250(-1), D2-260 and D3-350 PLCs.

Battery Replacement Instructions:

NOTE: *The lithium battery in your panel is used to maintain the system* ***SRAM*** *retentive memory and the CPU date/time registers when the unit is without external power. Before replacing the battery, back-up the data in your* ***SRAM*** *retentive memory as a precaution. Input power needs to be maintained to the panel during battery replacement. Typical battery life is five years, which includes panel runtime and normal shutdown periods. However, consider installing a fresh battery if your battery has not been replaced recently and the unit will be without power for a period of more than ten days.*

9

Preparation: If the touch panel is not mounted in or has been removed from a control cabinet, then it is recommended the panel be placed face down on a lint-free soft surface to prevent scratching the front of the panel. The battery door is located on the rear just below and to the left of the DC Power Connector.

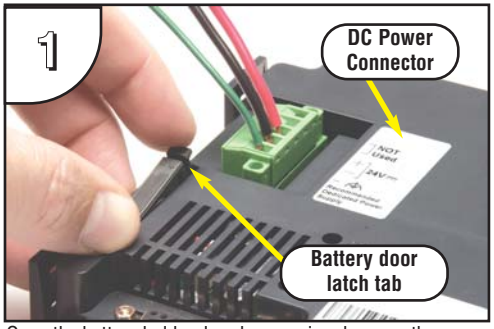

Open the battery holder door by pressing down on the upper latch tab while lifting upward and rotating the door in a downward motion. The battery door will pivot toward its bottom hinge point.

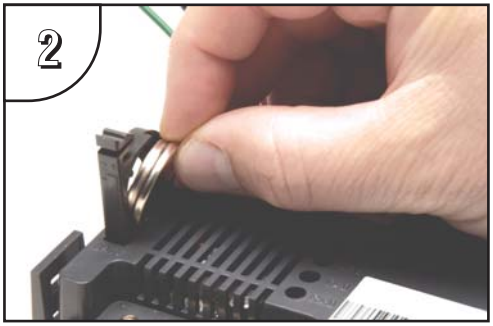

The coin cell style battery is located in the battery holder. To remove the battery, use the slot in the top of the holder to pry the battery away from the holder and while grasping the battery, lift it upward.

Continued on next page.

Battery Replacement Instructions (cont'd):

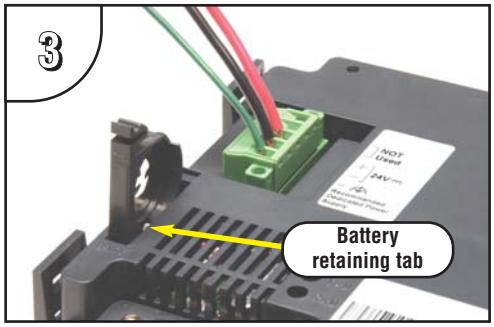

Above shows the empty battery holder and also points out the location of the battery retaining tab for reference in the next step.

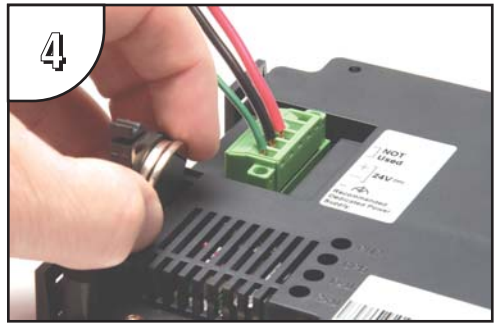

To install the battery, hold the battery so that the larger diameter (+ symbol) is outward. Set the battery to the inside of the retaining tab and then press the upper top of the battery into the holder.

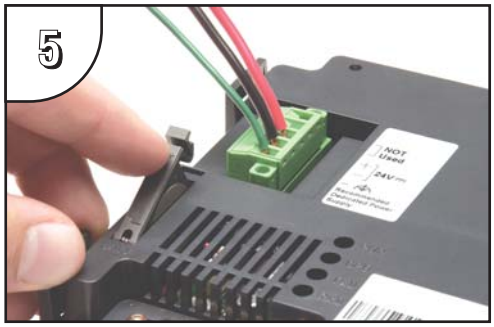

Press the battery holder door downward until the upper latch tab locks into place. Make a note of the date the battery was installed.

CAUTION - The battery used in this device may present a risk of fire or chemical burn if mistreated. Do not recharge, disassemble, heat above 100 °C (212 °F) or incinerate. Replace battery with AutomationDirect part number D2-BAT-1 or CR2354 only. Use of another battery may present a risk of fire or explosion. Dispose of used battery properly. Keep away from children.

Additional precautions:
- **Do not short circuit the battery and be sure to make the correct polarity connections.**
- **Avoid extremely high or low temperatures and high humidity when storing.**
- **Do not dismantle the battery.**

Perchlorate Material, special disposal handling may apply

6” Panel Mounting Clip Replacements – EA-BRK-1

Spare panel mounting clips for 6 inch *C-more* touch panels. Package of 2 clips with 4 screws.

Installation Instructions

Position the touch panel through the cutout in the control cabinet door and hold in place. The mounting clips can be positioned into one of two different set of slots for different cabinet thicknesses. See table below.

The above photo shows one mounting clip in place. The example is using the lower mounting clip slots that accommodates an enclosure thickness of 0.039 – 0.24 inches [1 – 6 mm]. The upper slots can be used for an enclosure thickness of 0.20 – 0.63 inches [5 – 16 mm].

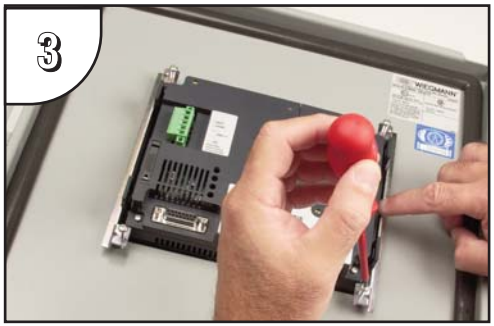

Tighten the mounting screws in an alternating fashion while observing the front of the touch panel. The goal is to make sure the front bezel is pulled up against the enclosure sheet metal uniformly, and the touch panel gasket is fully compressed all the way around its perimeter. Tighten the screws to a torque rating shown in the table below. Avoid over-tightening the screws to the point that they start to deform or bend the mounting clip.

The above photo shows both mounting clips in place and the touch panel secured.

Touch Panel Size	Enclosure Thickness Range	Mounting Clip Screw Torque
6” lower mounting clip position	0.039 - 0.24 inch [1 – 6 mm]	35 ~ 50 oz-in [0.25 ~ 0.35 Nm]
6” upper mounting clip position	0.20 - 0.63 inch [5 – 16 mm]	35 ~ 50 oz-in [0.25 ~ 0.35 Nm]

8–15” Panel Mounting Clip Replacements– EA-BRK-2

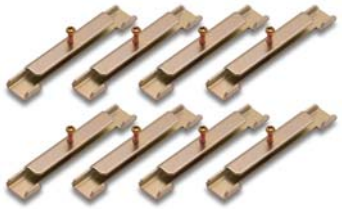

Spare panel mounting clips for the 8 inch through 15 inch *C-more* touch panels. Package of 8 clips with 8 screws.

Installation Instructions

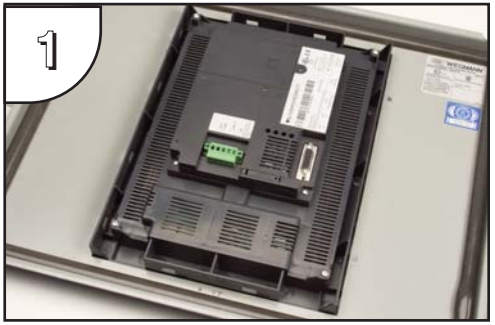

Position the touch panel through the cutout in the control cabinet door and hold in place. The mounting clips are positioned into the slots around the outside edge of the touch panel rear.

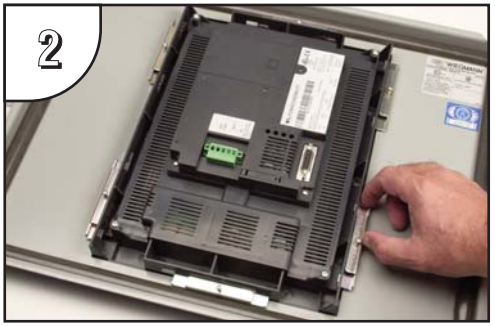

The mounting clips are positioned into the larger portion of the slot at two locations, and then slid toward the smaller portion of the slots to lock them in place. Some slots are arranged to slide to the left and others to the right.

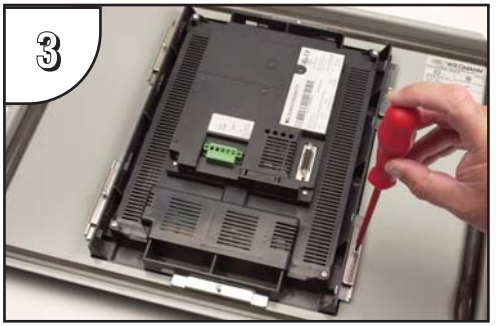

Tighten the mounting screw for each mounting clip in an alternating fashion at all clips while observing the front of the touch panel. The goal is to make sure the front bezel is pulled up against the enclosure sheet metal uniformly, and the touch panel gasket is fully compressed all the way around its perimeter. Tighten the screws to a torque rating shown in the table below. Avoid over-tightening the screws to the point that they start to deform or bend the mounting clip.

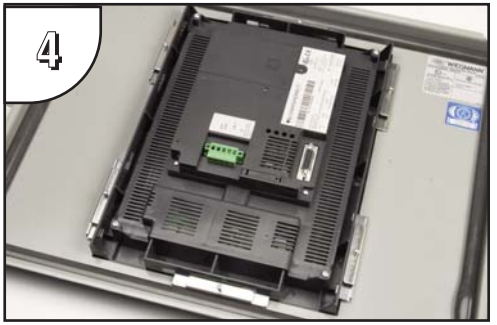

The above photo shows all mounting clips in place and the touch panel secured. The 8”, 10” and 12” touch panels require 6 mounting clips and the 15” touch panel requires 8 mounting clips.

Touch Panel Size	Enclosure Thickness Range	Mounting Clip Screw Torque
6” upper mounting clip position	0.20 - 0.63 inch [5 – 16 mm]	35 ~ 50 oz-in [0.25 ~ 0.35 Nm]

DC Panel Power Connector Replacement – EA-DC-CON

C-more touch panel 5-position DC power connector terminal block replacement. One (1) DC Power Connector is supplied with each touch panel.

Tightening Torque	
Power supply cable torque	71 - 85 oz-in (0.5 - 0.6 Nm)

NOTE: Use 60 / 75 °C copper conductors only.

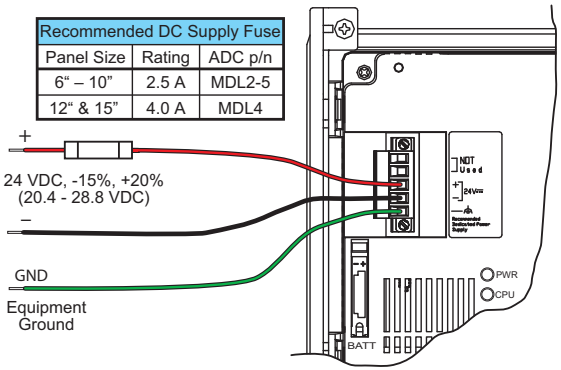

Recommended DC Supply Fuse		
Panel Size	Rating	ADC p/n
6“ – 10”	2.5 A	MDL2-5
12“ & 15”	4.0 A	MDL4

AC Power Adapter Connector Replacement– EA-AC-CON

C-more AC power adapter 3-position AC power connector terminal block replacement. One (1) AC Power Connector is supplied with each AC/DC Power Adapter, EA-AC.

Tightening Torque	
Power supply cable torque	71 - 85 oz-in (0.5 - 0.6 Nm)
Mounting flange screw torque	57 - 71 oz-in (0.4 - 0.5 Nm)

NOTE: Use 60 / 75 °C copper conductors only.

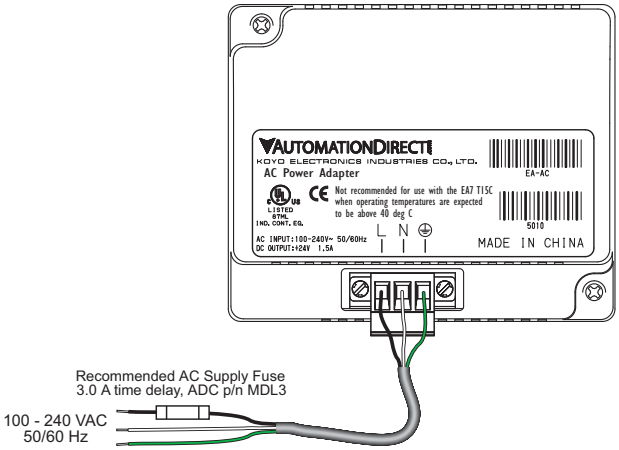

8-15” Panel Backlight Bulb Replacements – EA-xx-BULB

Backlight assembly, customer replaceable, for *C-more* 8”, 10”, 12” and 15” touch panels. The 8”, 10” and 15” touch panels use two bulbs per panel and the 12” touch panels use one bulb per panel. The bulbs are packaged two per box for the 8”, 10” and 15” touch panels and one per box for the 12” touch panels.

(The part number is completed by substituting the panel size, 08, 10, 12 or 15, for the xx shown above.)

Backlight Bulb Installation Instructions Example:

(See the Data Sheet insert for the specific backlight bulb that is being replaced for more detailed information.)

WARNING: This procedure should only be performed by qualified personnel who are experienced in working with electronic equipment. Take the necessary steps to prevent damage from static electricity discharge. Disconnect input power to the touch panel before proceeding. Be careful not to pinch the ribbon cable between the housing and bezel when re-assembling the panel.

9

Preparation: Disconnect input power and all other connections, then remove the touch panel from the control cabinet. In a clean environment, place the panel face down on a lint-free soft surface to prevent scratching the front of the panel.

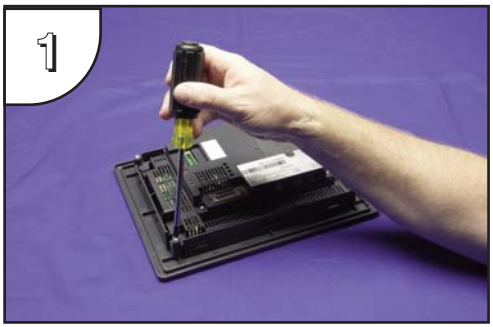

With power disconnected, use a #2 Phillips screwdriver to remove the four outer screws holding the touch panel’s main electronics housing to the front bezel.

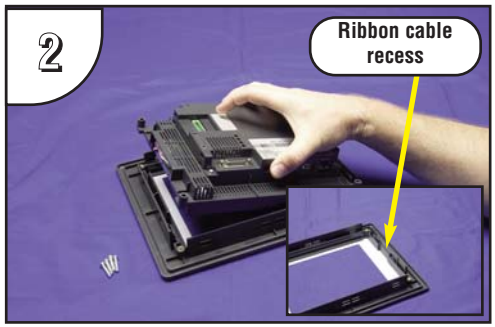

Lift the touch panel’s main electronics housing from the front bezel. Set the front bezel and four screws to the side. Observe the ribbon cable recess on the front bezel (see detail) for use in re-assembling the panel.

Continued on next page.

Backlight Bulb Installation Instructions Example (cont'd):

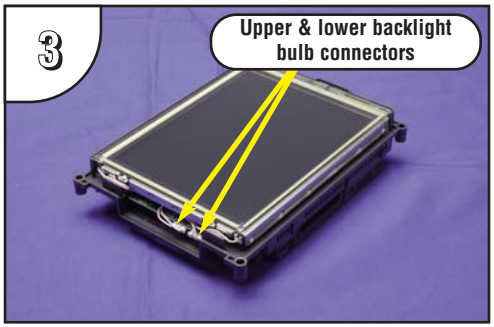

Place the touch panel's main electronics housing facing up on a lint-free soft surface. Position the housing so that the backlight bulb connectors are in plain view.

Carefully lift the bulb's wires out of the wire guides so they are free from obstructions. Do this for both the upper and lower backlight bulbs.

Unplug the backlight bulb's power cable connector from the circuit board connector. Again, do this for both the upper and lower backlight bulbs.

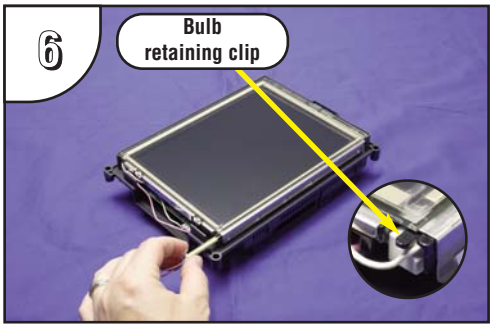

Push up on the bulb retaining clip (see detail) while grasping the plastic end of the bulb assembly and gently slide the bulb from its guide. Do this for both bulbs. The bulb is glass and fragile, so handle with care.

This photo shows the backlight bulb completely removed from its guide in the panel's main electronics housing. (Only one bulb shown.)

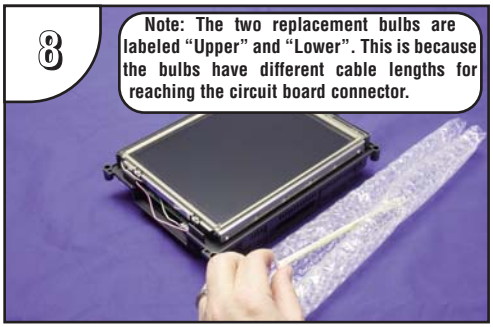

Remove the replacement bulb from its shipping tube and the protective bubble wrap. Note: The replacement bulbs come in pairs and should be replaced in pairs for longevity and maintenance convenience.

Continued on next page.

Backlight Bulb Installation Instructions Example (cont'd):

Position the replacement bulb so that the opening in its three-sided gold colored reflector faces toward the LCD touch screen. Using gentle pressure, slide the bulb into the guide until the retaining clip locks.

Plug each backlight bulb's power cable connector back into its respective circuit board connector.

Gently position each backlight bulb's wires back into their respective wire guides to help clear any obstructions when inserting the panel's main electronics housing back into the front bezel. Position any excess wire length in between the printed circuit board and the LCD to prevent it from becoming pinched between the housing and bezel.

Position the touch panel's main electronics housing into the front bezel so that the flat ribbon cable on the housing aligns with the recess in the front bezel. Insert the four screws and tighten to a maximum of 70 oz-in [0.5 Nm].

6-15” Panel Gasket Replacements – EA-xx-GSK

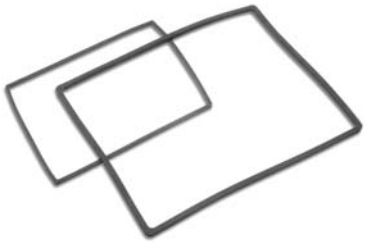

Replacement NEMA 4/4X touch panel gaskets for ***C-more*** 6”, 8”, 10”, 12” and 15” touch panels.

(The part number is completed by substituting the panel size, 06, 08, 10, 12 or 15, for the xx shown above.)

Gasket Replacement Installation Instructions:

Preparation: Disconnect input power and all other connections, then remove the touch panel from the control cabinet. In a clean environment, place the panel face down on a lint-free soft surface to prevent scratching the front of the panel.

Start at one corner and pull the old gasket out of the channel that holds the gasket in place. Pull the gasket up as you work around the entire perimeter of the touch panel. Discard the old gasket.

Lay the new gasket over the channel so that the long and short sides of the gasket match up to the long and short sides of the touch panel. Start at one corner and match the gasket’s corner to the channel’s corner. Press the gasket into the channel and work all away around the perimeter of the touch panel. Re-install the touch panel.

8-15” Panel Bezel Replacement – EA-xx-BEZEL

The NEMA 4/4X bezels used on the *C-more* 8”, 10”, 12” and 15” touch panels can be easily replaced. The replacement bezel includes the clear membrane element that protects the touch sensitive area. A gasket is not included. The bezel and membrane element do not require replacement under normal use. In the event that the clear membrane is scratched from the use of sharp objects or abrasive materials, follow the procedure outlined below to replace the front bezel.

(The part number is completed by substituting the panel size, 08, 10, 12 or 15, for the xx shown above.)

Note: *The bezel on the 6” **C-more** touch panels is not user replaceable and can only be replaced by **AutomationDirect**. Contact the **AutomationDirect** returns department @ 1-800-633-0405 to make arrangements for returning the unit for repair.*

Bezel Replacement Instructions Example:

9

WARNING: This procedure should only be performed by qualified personnel who are experienced in working with electronic equipment. Take the necessary steps to prevent damage from static electricity discharge. Disconnect input power to the touch panel before proceeding. Be careful not to pinch the ribbon cable between the housing and bezel when re-assembling the panel.

Preparation: Disconnect input power and all other connections, then remove the touch panel from the control cabinet. In a clean environment, place the panel face down on a lint-free soft surface to prevent scratching the front of the panel.

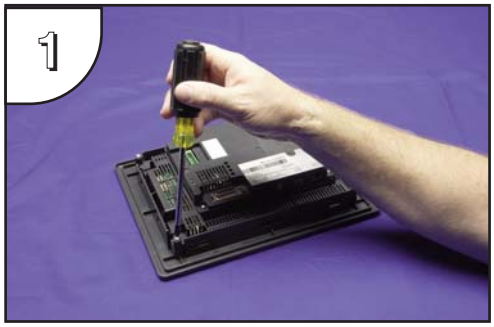

With power disconnected, use a #2 Phillips screwdriver to remove the four outer screws holding the touch panel’s main electronics housing to the front bezel.

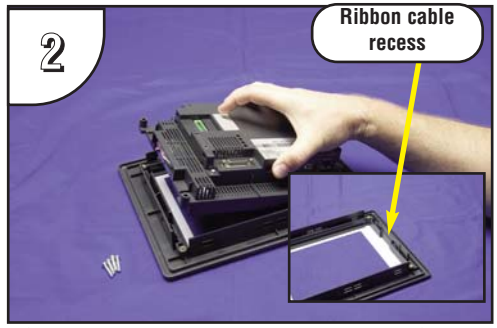

Lift the touch panel’s main electronics housing from the front bezel. Set the four screws to the side and discard the original bezel. Observe the ribbon cable recess on the front bezel (see detail) for use in re-assembling the panel.

Continued on next page.

Bezel Replacement Instructions Example (cont'd):

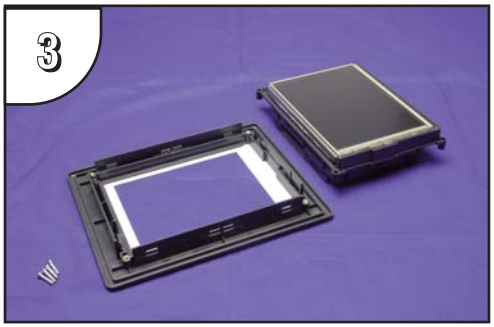

Place the new bezel facing down on the lint-free soft surface along with main electronics and four screws.

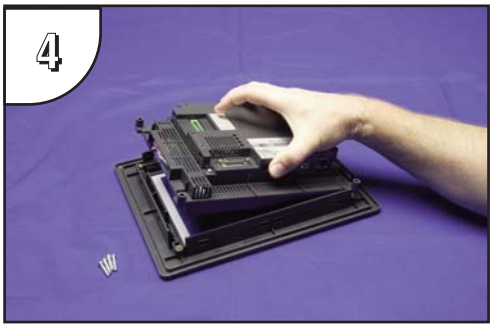

Position the touch panel's main electronics housing into the new bezel so that the flat ribbon cable on the housing matches up with the recess in the front bezel. Insert the four screws and tighten to a maximum of 70 oz-in [0.5 Nm].

6” Adapter Plate Gasket Replacement – EA-6-ADPTR-GSK

6-inch replacement NEMA 4/4X gasket for the *C-more* touch panel adapter plate.

6” Adapter Plate Gasket Replacement Instructions:

Preparation: Disconnect input power and all other connections, remove the touch panel from the 6” adapter plate, and then remove the adapter plate from the control cabinet by removing the six (6) screws that secure the adapter to the control cabinet. In a clean environment, place the adapter plate face down on a lint-free soft surface to prevent scratching the adapter plate.

Start at one corner and pull the old gasket out of the channel that holds the gasket in place. Pull the gasket up as you work around the entire perimeter of the adapter plate. Discard the old gasket.

Lay the new gasket over the channel so that the long and short sides of the gasket match up to the long and short sides of the adapter plate. Start at one corner and match the gasket’s corner to the channel’s corner. Press the gasket into the channel and work all away around the perimeter of the adapter plate. Re-install the adapter plate and then the touch panel.

Panel & PLC Error Code Tables

Appendix A

In This Appendix...

Introduction A-2

C-more Touch Panel Error Code Table A-3

DirectLOGIC – Panel Error Code PLC-499 Explanation A-5

DirectLOGIC K-Sequence Protocol – PLC Error Code Table A-5

DirectLOGIC DirectNET Protocol – PLC Error Codes A-5

Modbus Protocols Error Code P499 Explanation A-6

AutomationDirect CLICK A-6

AutomationDirect DirectLOGIC - Modbus (Koyo) A-6

Modicon Modbus RTU A-6

Entivity Modbus RTU A-6

DirectLOGIC ECOM Protocol – PLC Error Codes A-6

Allen-Bradley – Panel Error Code PLC-499 Explanation A-7

Allen-Bradley DF1 & DH485 Protocols – PLC Error Code Tables A-8

Allen-Bradley EtherNet/IP Protocol –Panel Error Code PLC-496, 497 and 498 Explanation A-10

Allen-Bradley – EtherNet/IP Protocol – PLC Error Code TablesControlLogix, CompactLogix, & FlexLogix A-11

Allen-Bradley – EtherNet/IP Protocol – PLC Error Code TablesMicroLogix 1100, 1400 & SLC 5/05, both via native Ethernet port;MicroLogix 1000, 1100, 1200, 1400, 1500, SLC 5/03/04/05, all via ENI Adapter A-15

Generic EtherNet IP Protocol – PLC Error Codes A-20

GE 90-30 – Panel Error Code PLC-499 Explanation A-21

GE 90-30 SNPX Protocol – PLC Error Code Tables A-22

Mitsubishi FX Protocol – PLC Error Codes A-31

Panel & PLC Error Code Tables

Appendix A

Omron – Panel Error Code PLC-499 Explanation A-31
Omron Host Link Protocol – PLC Error Code Table A-32
Omron FINS Protocol – PLC Error Code Table A-33
Omron – Panel Error Code P495 Explanation A-36
Omron CS/CJ FINS Ethernet Protocol – PLC Error Code Table A-37
Siemens – Panel Error Code P499 Explanation A-38
Siemens PPI Protocol – PLC Error Code Table A-39
Siemens ISO over TCP Protocol – PLC Error Code Table A-40

This page intentionally left blank

Introduction

The *C-more* family of touch panels is capable of communicating with a wide variety of Programmable Logic Controllers. *C-more* is capable of communicating over RS232, RS422 and RS485 serial networks as well as Ethernet networks. It communicates with all AutomationDirect PLCs utilizing various protocols. *C-more* also communicates with other brands of PLCs by their different protocols. For a complete list of PLCs and protocols, see the table on page 16 of **Chapter 1: Getting Started**.

As with any network communications, errors will occur. To make it more simple for the user to identify the cause of the possible error, we have provided a error code table for all of the possible errors that *C-more* can detect.

If a *C-more* communications error does occur, the error message will appear across the top of the screen. The *C-more* touch panel also monitors any errors that are generated by the various PLCs that are connected to it. If any of the PLC generated errors are detected, they are displayed across the top of the panel's display embedded as a hexadecimal value in error code P499's message. An explanation of how the specific PLC error is identified in the panel error code P499 is shown proceeding the specific manufacturer's PLC error tables. How the hexadecimal error code value is interrupted is slightly different between manufacturers, so it is important to check the explanation at the beginning of each manufacturer's tables.

8

Note: *These PLC error codes are provided by the manufacturer of the related PLC and are subject to change by the PLC manufacturer. Please refer to the manufacturers documentation for a more complete and up-to-date list of error codes.*

All errors are also logged into the panel's **Error** log under the **Information** tab in the panel's **System Setup Screens** and are identified by the error code number. See **Chapter 5: System Setup Screens** for additional details.

If you have difficulty determining the cause of the error, please refer to **Chapter 8: Troubleshooting** for some troubleshooting tips or contact our technical support group at 770-844-4200 or the 3rd party PLC manufacturer.

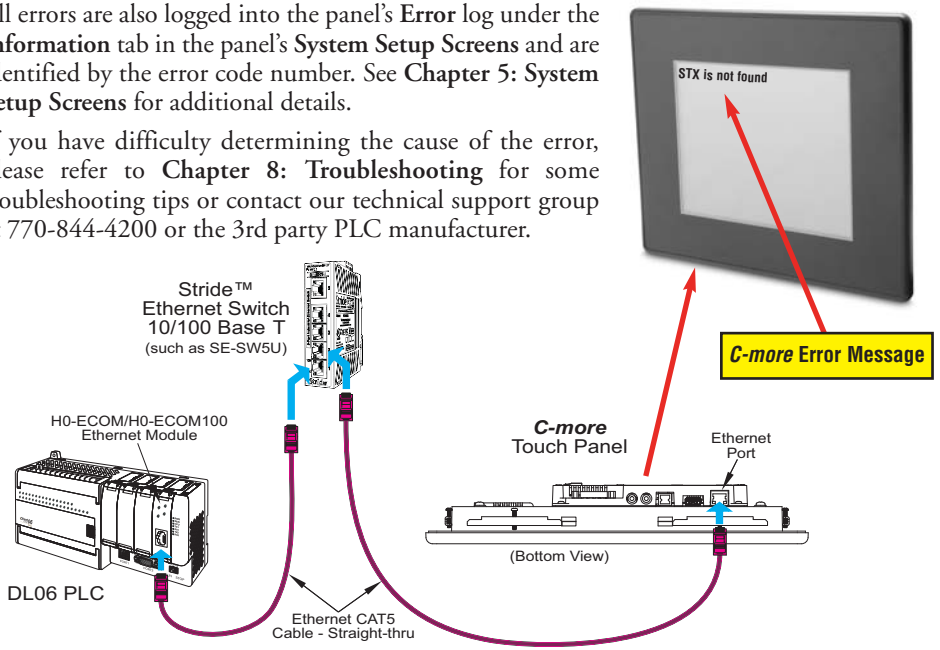

C-more Touch Panel Error Code Table

The following table includes all of the error codes and error messages that the panel will display if the listed cause is detected. All of these errors involve problems that could result with the panel communicating with the connected PLC. Be aware that not all of the panel errors are used with each type of PLC that can be connected to the panel.

C-more Touch Panel Error Code Table		
Error Code	**Error Message**	**Cause**
PLC-001	PLC Communication Timeout (for single PLC) %Device% PLC Communication Timeout (for multiple PLCs, such as RS-422/485)	A timeout occurred after sending a request to the PLC %Device%. %Device% indicates the device name, such as DEV001. Example error message for multiple PLCs: DEV001 PLC Communication Timeout.
PLC-002	NAK received from PLC	A negative acknowledgement (NAK) control code has been generated during a read/write request.
PLC-003	EOT received from PLC	An End of Transmission (EOT) control code is sent by the PLC in response to a Read/Write/SetBit request..
PLC-004	STX is not found	A Start of Text (STX) control code was not found in the data packet received from the PLC.
PLC-005	ETX or ETB is not found	Neither an End of Text (ETX) nor an End of Transmission Block (ETB) control code was found in the data packet received from the PLC.
PLC-006	LRC does not match	There was an incorrect Longitudinal Redundancy Check (LRC) control code in the communications packet received from the PLC. This is an indication that the data in the packet is corrupted.
PLC-007	CRC does not match	There was an incorrect Cyclic Redundancy Check (CRC) control code in the communications packet received from the PLC. This is an indication that the data in the packet is corrupted.
PLC-008	Address does not match	The address value returned in the data packet from the PLC is incorrect.
PLC-009	Different function code received from PLC	The function code returned in the data packet from the PLC is incorrect.
PLC-010	Data size does not match	There are an incorrect number of bytes found in the data packet returned from the PLC.
PLC-011	Invalid value in function code	There is an invalid value in the function code.
PLC-012	Invalid command sent to PLC	There was an invalid command sent to the PLC that wasn't recognized by the PLC.
PLC-013	ENQ received from PLC	If the data packet does not include a negative acknowledgement (NAK - 0x15 value) in the defined packet field, then an enquiry (ENQ) control code error will be displayed.
PLC-014	Transaction ID does not match	This error will be displayed if after checking the Transaction ID Bytes in the data packet, there is no match to what was requested.
PLC-015	%Device% No device found	A PLC device designated as %Device% could not be found.
PLC-016	Data byte communication error	0 byte of data is recieved
PLC-017	Out of address range	The touch panel requested a file number larger than 255.
PLC-018	Panel communication timeout	The server panel did not respond when using the Panel Pass Through.
PLC-019	Found in parity error by hardware	An error detected in the PLC memory.
PLC-020	Can't open serial port	Cannot open the Serial Port. If this error shows on the panel, it indicates a hardware problem.
PLC-021	PLC number does not match	The PLC number does not match the PLC number configured.
PLC-022	Can't reset DCB	Unable to reset the data communication bit.
PLC-023	Cable not connected properly	Communication cable incorrectly installed.

C-more Touch Panel Error Code Table continued on the next page.

C-more Touch Panel Error Code Table (cont'd)

C-more Touch Panel Error Code Table (cont'd)		
Error Code	**Error Message**	**Cause**
PLC-024	Cannot detect other devices on network	The panel is not communicating with other devices on the network.
PLC-025	Panel not in polling list	
PLC-026	PLC connection timeout	A timeout occured after sending a request to the PLC.
PLC-027	Memory type incorrect	
PLC-028	PLC failed to respond	The PLC failed to respond after sending a request to the PLC.
PLC-495	**Omron Ethernet Error**	**An error code specific to Omron Ethernet with a Value of XXXX has been returned from the PLC. See the explanation for error code PLC-495 proceeding the Omron CS/CJ FINS Ethernet error code tables.**
PLC-496	**Error code 0xaaaaaaaa returned from PLC**	**Allen-Bradley EtherNET/IP specific. Encapsulation Error. See the explanation for error code PLC-496 proceeding the Allen-Bradley EtherNet/IP error code tables.**
PLC-497	**Error code 0xaaaaaaaa returned from PLC**	**Allen-Bradley EtherNET/IP specific. CIP Error. See the explanation for error code PLC-497 proceeding the Allen-Bradley EtherNet/IP error code tables.**
PLC-498	**Error code 0xaaaaaaaa returned from PLC**	**Allen-Bradley EtherNET/IP specific. Service Packet Error. See the explanation for error code PLC-498 proceeding the Allen-Bradley EtherNet/IP error code tables.**
PLC-499	**Error code XXXX returned from PLC**	**An error code with a value of XXXX has been returned from the PLC. See the explanation for error code PLC-499 below for *Direct*LOGIC and proceeding each set of PLC error code tables that use this error code.**
PLC-500	Cannot write to Serial Port	Data cannot write to the Serial port. Data was sent to the PLC via the Serial Port. If this error shows on the Panel, it indicates a Hardware Problem.
PLC-700	Not enough buffer memory	There was an error while allocating memory for the read buffer. When this error is displayed, a memory leak may have occurred.
PLC-701	Access to inaccessible PLC memory	Request to inaccessible memory from the HMI layer to the PLC protocol layer. This error is an indication that there is a problem in the HMI layer.
PLC-702	Cannot access by different function code	A Read/Write/SetBit request has been sent to an invalid memory area. This error is an indication that there is a problem in the HMI layer.
PLC-703	Write request to PLC Read Only Memory	A PLC Write request was made to the PLC's Read-Only memory area.This error is an indication that there is a problem in the HMI layer or the PLC protocol layer.
PLC-704	Bad device-access	No device (PLC) exists in the server panel or the device name does not match between the server and client when using the Panel Pass Through.
PLC-705	Protocol does not match	The protocol for the device does Not match between the server and client when using the panel pass through.

*Direct*LOGIC – Panel Error Code PLC-499 Explanation

The PLC-499 error code is used to show any errors that are generated by the connected PLC. The PLC-499 error message includes a four digit hexadecimal value embedded in the message. This value can be looked up in the specific PLC's error tables to determine the cause of the error. The possible PLC generated error codes for the *Direct*LOGIC communication protocol are represented by a hexadecimal value as shown in the following message example.

*Direct*LOGIC Error Code PLC-499 Message Example:

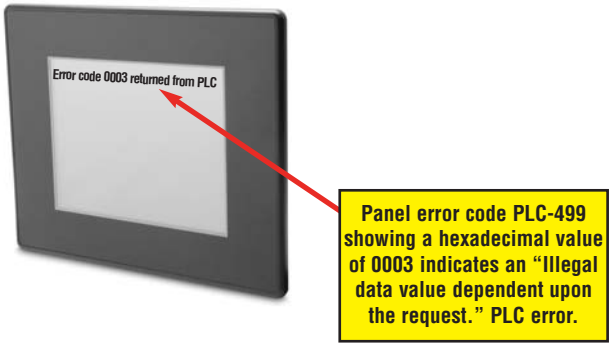

8

*Direct*LOGIC K-Sequence Protocol – PLC Error Code Table

The following table lists the errors that can be generated by the *Direct*LOGIC PLC when using the K-Sequence protocol.

PLC Error Codes for *Direct*LOGIC – K-Sequence	
Panel Error Code PLC-499 Hex Value	**Description**
01F8	Error setting value.
020D	Error in key mode.
021C	Password protected.

Note: *The following errors can be generated from the designated PLC, are monitored by the* ***C-more*** *touch panel, and displayed on the touch panel's screen as a hexadecimal value in panel error code PLC-499 message, if active. Please refer to the PLC manufacturer's documentation for additional information.*

*Direct*LOGIC *Direct*NET Protocol – PLC Error Codes

Only errors as listed in the Touch Panel Error Code Table shown on page A-3 can occur when using the *Direct*LOGIC *Direct*NET protocol, there are no PLC generated errors.

*Direct*LOGIC error code tables continued on the next page.

Modbus Protocols Error Code P499 Explanation

The following table lists the errors that can be generated by the Modbus protocols:

AutomationDirect CLICK

AutomationDirect DirectLOGIC - Modbus (Koyo)

Modicon Modbus RTU

Entivity Modbus RTU

Note: *The following errors can be generated from the designated PLC, are monitored by the* ***C-more*** *touch panel, and displayed on the touch panel's screen as a hexadecimal value in panel error code PLC-499 message, if active. Please refer to the PLC manufacturer's documentation for additional information.*

PLC Error Codes Modbus Protocols		
Panel Error Code P499 Hex Value	**Name**	**Meaning**
0x0001	ILLEGAL FUNCTION	The function code received in the query is not an allowable action for the server (or slave). This may be because the function code is only applicable to newer devices and was not implemented in the unit selected. It could also indicate that the server (or slave) is in the wrong state to process a request of this type, for example because it is unconfigured and is being asked to return registered values.
0x0002	ILLEGAL DATA ADDRESS	The data address received in the query is not an allowable address for the server (or slave). More specifically, the combination of reference number and transfer length is invalid. For a controller with 100 registers, the PDU addresses the first register as 0, and the last one as 99. If a request is submitted with a starting register address of 96 and a quantity of registers of 4, then the request will successfully operate (address-wise at least) on registers 96, 97, 98, 99. If a request is submitted with a starting register of 96 and a quantity of registers of 5, then the request will fail with Exception code 0x02 "Illegal Data Address" since it attempts to operate on registers 96, 97, 98, 99 and 100, and there is no register with address 100.
0x0003	ILLEGAL DATA VALUE	A value contained in the query data field is not an allowable value for server (or slave). This indicates a fault in the structure of the remainder of a complex request, such as that the implied length is incorrect. It specifically does NOT mean that a data item submitted for storage in a register has a value outside the expectation of the application program, since the Modbus protocol is unaware of the significance of any particular value of any particular register.
0x0004	SLAVE DEVICE FAILURE	An unrecoverable error occurred while the server (or slave) was attempting to perform the requested action.

*Direct*LOGIC ECOM Protocol – PLC Error Codes

Only errors as listed in the Touch Panel Error Code Table shown on page A-3 can occur when using the *Direct*LOGIC ECOM protocol, there are no PLC generated errors.

Allen-Bradley – Panel Error Code PLC-499 Explanation

The PLC-499 error code is used to show any errors that are generated by the connected PLC. The PLC-499 error message includes a four digit hexadecimal value embedded in the message. This value can be looked up in the specific PLC's error tables to determine the cause of the error. The possible PLC generated error codes for the Allen-Bradley DF1 and DH485 communication protocols are represented by a hexadecimal value as shown in the following diagram. Please note that the error code is broken down into three sections. It is possible for more than one type of PLC error to be displayed in this value.

Allen-Bradley Error Code PLC-499 Message Example:

AB DF1 and DH485 Protocol Error Code PLC-499 Breakdown

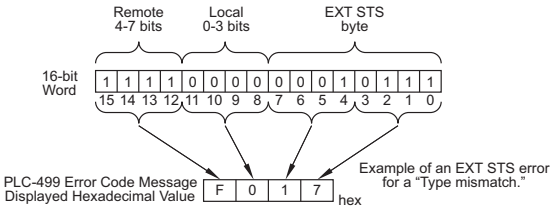

AB DF1 and DH485 Protocol – Multiple Error Code Examples

	Example 1	Example 2	Example 3
Remote 4-7 bits	F x x x	1 x x x	F x x x
+			
Local 0-3 bits	x 0 x x	x 1 x x	x 1 x x
+			
EXT STS byte	x x 0 9	x x 0 0	x x 0 9
=			
Error PLC-499 Value Displayed	F 0 0 9	1 1 0 0	F 1 0 9

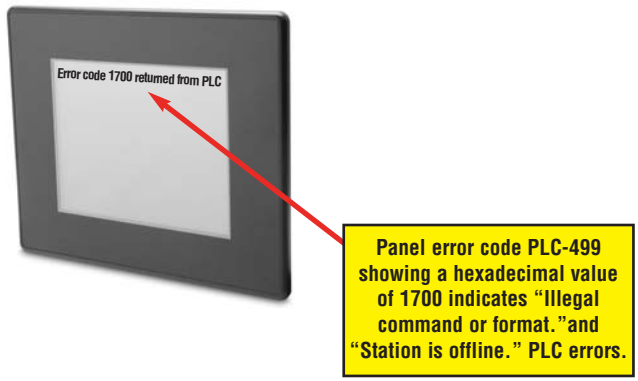

Allen-Bradley DF1 & DH485 Protocols – PLC Error Code Tables

The following PLC error code tables cover possible errors that are detected by the panel from Allen-Bradley PLCs using the DF1 and DH485 protocols. DF1 includes full and half duplex communications for the MicroLogix 1000, 1100. 1200, 1400, 1500, SLC 5/03, /04, /05, ControlLogix, CompactLogix and FlexLogix, and full duplex communications for the PLC5. DH485 includes all MicroLogix and SLC500 PLC's and any communication connection using an Allen-Bradley AIC device using the DH485 protocol.

Note: *The following errors can be generated from the designated PLC, are monitored by the* ***C-more*** *touch panel, and displayed on the touch panel's screen as a hexadecimal value in panel error code PLC-499 message, if active. Please refer to the PLC manufacturer's documentation for additional information.*

PLC Errors for Allen-Bradley DF1 and DH485 Protocols, Local STS Errors (0-3 bits)	
Panel Error Code PLC-499 Hex Value	**Description**
0x0	Success; no error.
0x1	DST node is out of buffer space.
0x2	Cannot guarantee delivery; link layer. (The remote node specified does not ACK command.)
0x3	Duplicate token holder detected.
0x4	Local port is disconnected.
0x5	Application layer timed out waiting for response.
0x6	Duplicate node detected.
0x7	Station is offline.
0x8	Hardware fault.

PLC Errors for Allen-Bradley DF1 and DH485 Protocols, Remote STS Errors (4-7 bits)	
Panel Error Code PLC-499 Hex Value	**Description**
0x0	Success; no error.
0x10	Illegal command or format.
0x20	Host has a problem and will not communicate.
0x30	Remote node host is missing, disconnected, or shut down.
0x40	Host could not complete function due to hardware fault.
0x50	Addressing problem or memory protect rungs.
0x60	Function not allowed due to command protection selection.
0x70	Processor is in Program Mode.
0x80	Compatibility mode file missing or communication zone problem.
0x90	Remote node cannot buffer command.
0xA0	Wait ACK (1775 KA buffer full).
0xB0	Remote node problem due to download.
0xC0	Wait ACK (1775 KA buffer full).
0xD0	not used
0xE0	not used
0xF0	**Error code in the EXT STS byte. See the error code table on the next page.**

(PLC generated error codes for the Allen-Bradley DF1 protocol continued on the next page.)

Allen-Bradley DF1 & DH485 Protocols – PLC Error Code Tables

PLC Errors for Allen-Bradley DF1 and DH485 Protocols, EXT STS Command Code for F0 Command	
Panel Error Code PLC-499 Hex Value	**Description**
0x0	not used
0x1	A field has an illegal value.
0x2	Fewer levels specified in address than minimum for any address.
0x3	More levels specified in address than system supports.
0x4	Symbol not found.
0x5	Symbol is of improper format.
0x6	Address does not point to something usable.
0x7	File is wrong size.
0x8	Cannot complete request; situation has changed since start of the command.
0x9	Data or file size is too large.
0xA	Transaction size plus word address is too large.
0xB	Access denied; improper privilege.
0xC	Condition cannot be generated; resource is not available.
0xD	Condition already exists; resource is readily available.
0xE	Command cannot be executed.
0xF	Histogram overflow.
0x10	No access.
0x11	Illegal data type.
0x12	Invalid parameter or invalid data.
0x13	Address reference exists to deleted area.
0x14	Command execution failure for unknown reason; possible PLC 3 histogram overflow.
0x15	Data conversion error.
0x16	Scanner not able to communicate with 1771 rack adapter.
0x17	Type mismatch.
0x18	1771 module response was not valid.
0x19	Duplicated label.
0x22	Remote rack fault.
0x23	Timeout.
0x24	Unknown error.
0x1A	File is open; another node owns it.
0x1B	Another node is the program owner.
0x1C	Disk File is write protectid or otherwise unavailable
0x1D	Disk File is being used by another application. Update not performed (offline only).
0x1E	Data table element protection violation.
0x1F	Temporary internal problem.

Allen-Bradley EtherNet/IP Protocol – Panel Error Code PLC-496, 497 and 498 Explanation

The PLC-496, PLC-497, and PLC-498 error codes are used to show any errors that are generated by the connected PLC. These error messages include an eight digit hexadecimal value displayed embedded in the message. This value can be looked up in the specific PLC's error tables to determine the cause of the error. The possible PLC generated error codes for the Allen-Bradley EtherNet/IP communication protocol is represented by a hexadecimal value as shown in the following message example.

Allen-Bradley Error Code PLC-496, 497, 498 Message Example:

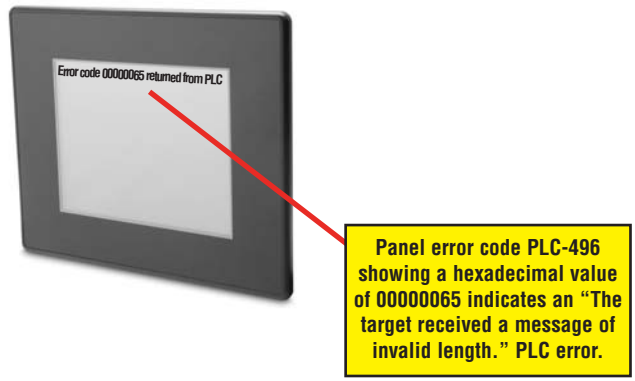

Allen-Bradley – EtherNet/IP Protocol – PLC Error Code Tables ControlLogix, CompactLogix, & FlexLogix

The following PLC error code tables cover possible errors that are detected by the panel from Allen-Bradley PLCs using the EtherNet/IP protocol. This includes all ControlLogix, CompactLogix and FlexLogix PLCs.

Note: *The following errors can be generated from the designated PLC, are monitored by the* ***C-more*** *touch panel, and displayed on the touch panel's screen as a hexadecimal value in panel error code PLC-496 message, if active. Please refer to the PLC manufacturer's documentation for additional information.*

PLC Errors for Allen-Bradley EtherNet/IP Protocol –Encapsulation Errors (Error code 0xaaaaaaaa returned from the PLC.)	
Panel Error Code PLC-496 Hex Value	**Description**
0x00000001	The sender issued an invalid or unsupported encapsulation command.
0x00000002	Insufficient memory resources in the receiver to handle the command. You can get this error if the 1761-NET-ENI cannot connect to the PLC serially.
0x00000003	Poorly formed or incorrect data in the data portion of the encapsulation message.
0x00000004 - 0x00000063	Reserved for legacy (Rockwell Automation).
0x00000064	An orginator used an invalid session handle when sending an encapsulation message to the target.
0x00000065	The target received a message of invalid length.
0x00000066 - 0x00000068	Reserved for legacy (Rockwell Automation).
0x00000069	Unsupported encapsulation protocol revision.
0x0000006a - 0x0000ffff	Reserved for future expansion.

PLC Errors for Allen-Bradley EtherNet/IP Protocol – CIP Errors (Error code 0xaaaaaaaa returned from the PLC.)	
Panel Error Code PLC-497 Hex Value	**Description**
0x010100	Connection Manager: Connection in Use or Duplicate Forward Open.
0x010103	Connection Manager: Transport Class and Trigger combination not supported.
0x010106	Connection Manager: Ownership Conflict.
0x010107	Connection Manager: Connection not found at target application.
0x010108	Connection Manager: Invalid connection type (problem with type or priority).
0x010109	Connection Manager: Invalid connection size.
0x010110	Connection Manager: Device not configured.
0x010111	Connection Manager: RPI not supported. Could also be problem with inactivity timeout.
0x010113	Connection Manager: Connection Manager cannot support any more connections.
0x010114	Connection Manager: Either the vendor ID or the Product Code in the key segment did not match the device.
0x010115	Connection Manager: Product Type in the key segment did not match the device.
0x010116	Connection Manager: Major or minor revision information in the key segment did not match the device.

(PLC generated error codes for the Allen-Bradley EtherNet/IP protocol for ControlLogix, CompactLogix, and FlexLogix continued on the next page.)

Allen-Bradley – EtherNet/IP Protocol – PLC Error Code Tables ControlLogix, CompactLogix, & FlexLogix (cont'd)

PLC Errors for Allen-Bradley EtherNet/IP Protocol – CIP Errors (Error code 0xaaaaaaaa returned from the PLC.)	
Panel Error Code PLC-497 Hex Value	**Description**
0x010117	Connection Manager: Invalid connection point.
0x010118	Connection Manager: Invalid configuration format.
0x010119	Connection Manager: Connection request fails since there is no controlling connection currently open.
0x01011a	Connection Manager: Target application cannot support any more connections.
0x01011b	Connection Manager: RPI is smaller than the Production Inhibit Time.
0x010203	Connection Manager: Connection cannot be closed since the connection has timed out.
0x010204	Connection Manager: Unconnected Send timed out waiting for a response.
0x010205	Connection Manager: Parameter error in Unconnected send service.
0x010206	Connection Manager: Message too large for Unconnected message service.
0x010207	Connection Manager: Unconnected acknowledge without reply.
0x010301	Connection Manager: No buffer memory available.
0x010302	Connection Manager: Network Bandwidth not available for data.
0x010303	Connection Manager: No Tag filters available.
0x010304	Connection Manager: Not configured to send real-time data.
0x010311	Connection Manager: Port specified in Port segment not available.
0x010312	Connection Manager: Link address specified in port segment not available.
0x010315	Connection Manager: invalid segment type or segment value in path.
0x010316	Connection Manager: Path and Connection not equal in close.
0x010317	Connection Manager: Ether Segment not present or Encoded Value in Network Segment is invalid.
0x010318	Connection Manager: Link address to self invalid.
0x010319	Connection Manager: Resources on Secondary unavailable.
0x01031a	Connection Manager: Connection already established.
0x01031b	Connection Manager: Direct connection already established.
0x01031c	Connection Manager: Miscellaneous.
0x01031d	Connection Manager: Redundant connection mismatch.
0x01031e	Connection Manager: No more consumer resources available in the producing module.
0x01031f	Connection Manager: No connection resources exist for target path.
0x010320 - 0x0107ff	Connection Manager: Vendor specific.
0x020000	Resource unavailable: Connection Manager resources are unavailable to handle service request.
0x030000	Invalid parameter value.
0x040000	Path segment error: The path segment identifier or the segment syntax was not understood by the processing node.
0x050000	Path destination unknown: The path is referencing an object class, instance or structure element that is not known or is not contained in the processing node.
0x060000	Partial transfer: Only part of the expected data was transferred.
0x070000	Connection lost: The messaging connection was lost.

(PLC generated error codes for the Allen-Bradley EtherNet/IP protocol for ControlLogix, CompactLogix, and FlexLogix continued on the next page.)

Allen-Bradley – EtherNet/IP Protocol – PLC Error Code Tables ControlLogix, CompactLogix, & FlexLogix (cont'd)

PLC Errors for Allen-Bradley EtherNet/IP Protocol – CIP Errors (Error code 0xaaaaaaaa returned from the PLC.)	
Panel Error Code PLC-497 Hex Value	**Description**
0x080000	Service not supported: The requested service was not implemented or was not defined for this Object Class/Instance.
0x090000	Invalid attribute value: Invalid attribute data detected.
0x0a0000	Attribute list error: An attribute in the Get_Attribute_List or Set_Attribute_List response has a non-zero status.
0x0b0000	Already in requested mode/state: The object is already in the mode/state being requested by the service.
0x0c0000	Object state conflict: The object cannot perform the requested service in its current mode/state.
0x0d0000	Object already exists: The requested instance of object to be created already exists.
0x0e0000	Attribute not settable: A request to modify non-modifiable attribute was received.
0x0f0000	Privilege violation: A permission/privilege check failed.
0x100000	Device state conflict: The device's current mode/state prohibits the execution of the requested service.
0x110000	Reply data too large: The data to be transmitted in the response buffer is larger than the allocated response buffer.
0x120000	Fragmentation of a primitive value: The service specified an operation that is going to fragment a primitive data value. For example, trying to send a 2 byte value to a REAL data type (4 byte).
0x130000	Not enough data: The service did not supply enough data to perform the specified operation.
0x140000	Attribute not supported: The attribute specified in the request is not supported.
0x150000	Too much data: The service supplied more data than was expected.
0x160000	Object does not exist: The object specified does not exist in the device.
0x170000	Service fragmentation sequence not in progress: The fragmentation sequence for this service is not currently active for this data.
0x180000	No stored attribute data: The attribute data of this object was no saved prior to the requested service.
0x190000	Store operation failure: The attribute data of this object was not saved due to a failure during the attempt.
0x1a0000	Routing failure, request packet too large: The service request packet was too large for transmission on a network in the path to the destination.
0x1b0000	Routing failure, response packet too large: The service reponse packet was too large for transmission on a network in the path from the destination.
0x1c0000	Missing attribute list entry data: The service did not supply an attribute in a list of attributes that was needed by the service to perform the requested behavior.
0x1d0000	Invalid attribute value list: The service is returning the list of attributes supplied with status information for those attributes that were invalid.
0x1e0000	Embedded service error: See Service Packet error list (PLC-498 Error codes) below:
0x1f0000	Vendor specific error: A vendor specific error has been encountered. This occurs when none of the specified errors relate to the error in the device.
0x200000	Invalid parameter: A parameter associated with the request was invalid. This code is used when a parameter does meet the requirements defined in an Application Object specification.
0x210000	Write-once value or medium already written: An attempt was made to write to a write-once-medium that has already been written or to modify a value that cannot be change once established.
0x220000	Invalid Reply Received: An invalid reply is received (example: service code sent doesn't match service code received.).

(PLC generated error codes for the Allen-Bradley EtherNet/IP protocol for ControlLogix, CompactLogix and FlexLogix continued on the next page.)

Allen-Bradley – EtherNet/IP Protocol – PLC Error Code Tables ControlLogix, CompactLogix, & FlexLogix (cont'd)

PLC Errors for Allen-Bradley EtherNet/IP Protocol – CIP Errors (Error code 0xaaaaaaaa returned from the PLC.)	
Panel Error Code PLC-497 Hex Value	**Description**
0x230000	Reserved by CIP for future extensions.
0x240000	Reserved by CIP for future extensions.
0x250000	Key failure in path: The key segment was included as the first segment in the path does not match the destination module. The object specific status shall indicate which part of the key check failed.
0x260000	Path Size Invalid: The size of the path which was sent with the Service Request is either not large enough to allow the Request to be routed to an object or too much routing data was included.
0x270000	Unexpected attribute in list: An attempt was made to set an attribute that is not able to be set at this time.
0x280000	Invalid Member ID: The Member ID specified in the request does not exist in the specified Class/Instance/Attribute.
0x290000	Member not settable: A request to modify a non-modifiable member was received.
0x2a0000	Group 2 only server general failure: This error code may only be reported by DeviceNet group 2 only servers with 4K or less code space and only in place of Service not supported, Attribute not supported and Attribute not settable.
0x2b0000 - 0xcf0000	Reserved by CIP for future extensions.
0xd00000 - 0xff0000	Reserved for Object Class and service errors: This range of error codes is to be used to indicate Object Class specific errors. Use of this range should only be used when errors in this table don't accurately reflect the error encountered.

PLC Errors for Allen-Bradley EtherNet/IP Protocol – Service Packet Errors (Error code 0xaaaaaaaa returned from the PLC.)	
Panel Error Code PLC-498 Hex Value	**Description**
0x040000	This general status codes that the tag name could not be deciphered. This could mean that the tag name was entered incorrectly or does not exist in the PLC.
0x050000	The particular item referenced (usually instance) could not be found.
0x060000	The amount of data requested would not fit into the response buffer. Partial data transfer has occurred.
0x0a0000	An error has occurred trying to process one of the attributes.
0x130000	Not enough command data/parameters were supplied in the command to execute the service requested.
0x1c0000	An insufficient number of attributes were provided compared to the attribute count.
0x260000	The tag name length specified did not match what was in the message.
0xff0521	You have tried to access beyond the end of the data object.
0xff0721	The abbreviated type does not match the data type of the data object.
0xff0421	The beginning offset was beyond the end of the template.

Allen-Bradley – EtherNet/IP Protocol – PLC Error Code Tables MicroLogix 1100, 1400 & SLC 5/05, both via native Ethernet port; MicroLogix 1000, 1100, 1200, 1400, 1500, SLC 5/03/04/05, all via ENI Adapter

The following PLC error code tables cover possible errors that are detected by the panel from Allen-Bradley PLCs using the EtherNet/IP protocol. This includes MicroLogix 1100, 1400 & SLC 5/05, both using their native Ethernet port, and MicroLogix 1000, 1100, 1200, 1400, 1500, SLC 5/03, 5/04 and 5/05 using an Allen-Bradly ENI Adapter.

Note: *The following errors can be generated from the designated PLC, are monitored by the* ***C-more*** *touch panel, and displayed on the touch panel's screen as a hexadecimal value in panel error code PLC-496 message, if active. Please refer to the PLC manufacturer's documentation for additional information.*

PLC Errors for Allen-Bradley EtherNet/IP Protocol –Encapsulation Errors (Error code 0xaaaaaaaa returned from the PLC.)	
Panel Error Code PLC-496 Hex Value	**Description**
0x00000001	The sender issued an invalid or unsupported encapsulation command.
0x00000002	Insufficient memory resources in the receiver to handle the command. You can get this error if the 1761-NET-ENI cannot connect to the PLC serially.
0x00000003	Poorly formed or incorrect data in the data portion of the encapsulation message.
0x00000004 - 0x00000063	Reserved for legacy (Rockwell Automation).
0x00000064	An orginator used an invalid session handle when sending an encapsulation message to the target.
0x00000065	The target received a message of invalid length.
0x00000066 - 0x00000068	Reserved for legacy (Rockwell Automation).
0x00000069	Unsupported encapsulation protocol revision.
0x0000006a - 0x0000ffff	Reserved for future expansion.

PLC Errors for Allen-Bradley EtherNet/IP Protocol – CIP Errors (Error code 0xaabbbb returned from the PLC.)	
Panel Error Code PLC-497 Hex Value	**Description**
0x010100	Connection Manager: Connection in Use or Duplicate Forward Open.
0x010103	Connection Manager: Transport Class and Trigger combination not supported.
0x010106	Connection Manager: Ownership Conflict.
0x010107	Connection Manager: Connection not found at target application.
0x010108	Connection Manager: Invalid connection type (problem with type or priority).
0x010109	Connection Manager: Invalid connection size.
0x010110	Connection Manager: Device not configured.
0x010111	Connection Manager: RPI not supported. Could also be problem with inactivity timeout.

(PLC generated error codes for the Allen-Bradley EtherNet/IP protocol for MicroLogix 1100, 1400, SLC 5/05, or ENI Adapter continued on the next page.)

Allen-Bradley – EtherNet/IP Protocol – PLC Error Code Tables MicroLogix 1100, 1400 & SLC 5/05, both via native Ethernet port; MicroLogix 1000, 1100, 1200, 1400, 1500, SLC 5/03/04/05, all via ENI Adapter

PLC Errors for Allen-Bradley EtherNet/IP Protocol – CIP Errors (Error code 0xaabbbb returned from the PLC.)	
Panel Error Code PLC-497 Hex Value	**Description**
0x010113	Connection Manager: Connection Manager cannot support any more connections.
0x010114	Connection Manager: Either the vendor ID or the Product Code in the key segment did not match the device.
0x010115	Connection Manager: Product Type in the key segment did not match the device.
0x010116	Connection Manager: Major or minor revision information in the key segment did not match the device.
0x010117	Connection Manager: Invalid connection point.
0x010118	Connection Manager: Invalid configuration format.
0x010119	Connection Manager: Connection request fails since there is no controlling connection currently open.
0x01011a	Connection Manager: Target application cannot support any more connections.
0x01011b	Connection Manager: RPI is smaller than the Production Inhibit Time.
0x010203	Connection Manager: Connection cannot be closed since the connection has timed out.
0x010204	Connection Manager: Unconnected Send timed out waiting for a response.
0x010205	Connection Manager: Parameter error in Unconnected send service.
0x010206	Connection Manager: Message too large for Unconnected message service.
0x010207	Connection Manager: Unconnected acknowledge without reply.
0x010301	Connection Manager: No buffer memory available.
0x010302	Connection Manager: Network Bandwidth not available for data.
0x010303	Connection Manager: No Tag filters available.
0x010304	Connection Manager: Not configured to send real-time data.
0x010311	Connection Manager: Port specified in Port segment not available.
0x010312	Connection Manager: Link address specified in port segment not available.
0x010315	Connection Manager: invalid segment type or segment value in path.
0x010316	Connection Manager: Path and Connection not equal in close.
0x010317	Connection Manager: Ether Segment not present or Encoded Value in Network Segment is invalid.
0x010318	Connection Manager: Link address to self invalid.
0x010319	Connection Manager: Resources on Secondary unavailable.
0x01031a	Connection Manager: Connection already established.
0x01031b	Connection Manager: Direct connection already established.
0x01031c	Connection Manager: Miscellaneous.
0x01031d	Connection Manager: Redundant connection mismatch.
0x01031e	Connection Manager: No more consumer resources available in the producing module.
0x01031f	Connection Manager: No connection resources exist for target path.
0x010320 - 0x0107ff	Connection Manager: Vendor specific.

(PLC generated error codes for the Allen-Bradley EtherNet/IP protocol for MicroLogix 1100, 1400, SLC 5/05, or ENI Adapter continued on the next page.)

Allen-Bradley – EtherNet/IP Protocol – PLC Error Code Tables MicroLogix 1100, 1400 & SLC 5/05, both via native Ethernet port; MicroLogix 1000, 1100, 1200, 1400, 1500, SLC 5/03/04/05, all via ENI Adapter

PLC Errors for Allen-Bradley EtherNet/IP Protocol – CIP Errors (Error code 0xaabbbb returned from the PLC.)	
Panel Error Code PLC-497 Hex Value	**Description**
0x020000	Resource unavailable: Connection Manager resources are unavailable to handle service request.
0x030000	Invalid parameter value.
0x040000	Path segment error: The path segment identifier or the segment syntax was not understood by the processing node.
0x050000	Path destination unknown: The path is referencing an object class, instance or structure element that is not known or is not contained in the processing node.
0x060000	Partial transfer: Only part of the expected data was transferred.
0x070000	Connection lost: The messaging connection was lost.
0x080000	Service not supported: The requested service was not implemented or was not defined for this Object Class/Instance.
0x090000	Invalid attribute value: Invalid attribute data detected.
0x0a0000	Attribute list error: An attribute in the Get_Attribute_List or Set_Attribute_List response has a non-zero status.
0x0b0000	Already in requested mode/state: The object is already in the mode/state being requested by the service.
0x0c0000	Object state conflict: The object cannot perform the requested service in its current mode/state.
0x0d0000	Object already exists: The requested instance of object to be created already exists.
0x0e0000	Attribute not settable: A request to modify non-modifiable attribute was received.
0x0f0000	Privilege violation: A permission/privilege check failed.
0x100000	Device state conflict: The device's current mode/state prohibits the execution of the requested service.
0x110000	Reply data too large: The data to be transmitted in the response buffer is larger than the allocated response buffer.
0x120000	Fragmentation of a primitive value: The service specified an operation that is going to fragment a primitive data value. For example, trying to send a 2 byte value to a REAL data type (4 byte).
0x130000	Not enough data: The service did not supply enough data to perform the specified operation.
0x140000	Attribute not supported: The attribute specified in the request is not supported.
0x150000	Too much data: The service supplied more data than was expected.
0x160000	Object does not exist: The object specified does not exist in the device.
0x170000	Service fragmentation sequence not in progress: The fragmentation sequence for this service is not currently active for this data.
0x180000	No stored attribute data: The attribute data of this object was no saved prior to the requested service.
0x190000	Store operation failure: The attribute data of this object was not saved due to a failure during the attempt.
0x1a0000	Routing failure, request packet too large: The service request packet was too large for transmission on a network in the path to the destination.
0x1b0000	Routing failure, response packet too large: The service reponse packet was too large for transmission on a network in the path from the destination.
0x1c0000	Missing attribute list entry data: The service did not supply an attribute in a list of attributes that was needed by the service to perform the requested behavior.

(PLC generated error codes for the Allen-Bradley EtherNet/IP protocol for MicroLogix 1100, 1400, SLC 5/05, or ENI Adapter continued on the next page.)

Allen-Bradley – EtherNet/IP Protocol – PLC Error Code Tables MicroLogix 1100, 1400 & SLC 5/05, both via native Ethernet port; MicroLogix 1000, 1100, 1200, 1400, 1500, SLC 5/03/04/05, all via ENI Adapter

PLC Errors for Allen-Bradley EtherNet/IP Protocol – CIP Errors (Error code 0xaabbbb returned from the PLC.)	
Panel Error Code PLC-497 Hex Value	**Description**
0x1d0000	Invalid attribute value list: The service is returning the list of attributes supplied with status information for those attributes that were invalid.
0x1e0000	Embedded service error: See Service Packet error list (PLC-498 Error codes) below:
0x1f0000	Vendor specific error: A vendor specific error has been encountered. This occurs when none of the specified errors relate to the error in the device.
0x200000	Invalid parameter: A parameter associated with the request was invalid. This code is used when a parameter does meet the requirements defined in an Application Object specification.
0x210000	Write-once value or medium already written: An attempt was made to write to a write-once-medium that has already been written or to modify a value that cannot be change once established.
0x220000	Invalid Reply Received: An invalid reply is received (example: service code sent doesn't match service code received.).
0x230000	Reserved by CIP for future extensions.
0x240000	Reserved by CIP for future extensions.
0x250000	Key failure in path: The key segment was included as the first segment in the path does not match the destination module. The object specific status shall indicate which part of the key check failed.
0x260000	Path Size Invalid: The size of the path which was sent with the Service Request is either not large enough to allow the Request to be routed to an object or too much routing data was included.
0x270000	Unexpected attribute in list: An attempt was made to set an attribute that is not able to be set at this time.
0x280000	Invalid Member ID: The Member ID specified in the request does not exist in the specified Class/Instance/Attribute.
0x290000	Member not settable: A request to modify a non-modifiable member was received.
0x2a0000	Group 2 only server general failure: This error code may only be reported by DeviceNet group 2 only servers with 4K or less code space and only in place of Service not supported, Attribute not supported and Attribute not settable.
0x2b0000 - 0xcf0000	Reserved by CIP for future extensions.
0xd00000 - 0xff0000	Reserved for Object Class and service errors: This range of error codes is to be used to indicate Object Class specific errors. Use of this range should only be used when errors in this table don't accurately reflect the error encountered.

(PLC generated error codes for the Allen-Bradley EtherNet/IP protocol for MicroLogix 1100, SLC 5/05, or ENI Adapter continued on the next page.)

Allen-Bradley – EtherNet/IP Protocol – PLC Error Code Tables MicroLogix 1100, 1400 & SLC 5/05, both via native Ethernet port; MicroLogix 1000, 1100, 1200, 1400, 1500, SLC 5/03/04/05, all via ENI Adapter

PLC Errors for Allen-Bradley EtherNet/IP Protocol – Service Packet Errors (Error code 0xaabbbb returned from the PLC.)	
Panel Error Code PLC-498 Hex Value	**Description**
0x010000	DST Node is out of buffer space.
0x020000	Cannot guarantee delivery; link layer (The remote node specified does not ACK command).
0x030000	Duplicate token holder detected.
0x040000	Local port is disconnected.
0x050000	Application layer timed out waiting for response.
0x060000	Duplicate node detected.
0x070000	Station is offline.
0x080000	Hardware fault.
0x100000	Illegal command or format. Typical error received from PLC when addressed requested to the PLC does not exist. Usually occurs if memory map has not been expanded in PLC to the range requested from panel.
0x200000	Host has a problem and will not communicate.
0x300000	Remote node host is missing, disconnected, or shut down.
0x400000	Host could not complete function due to hardware fault.
0x500000	Addressing problem or memory protected rungs.
0x600000	Function not allowed due to command protection selection.
0x700000	Processor is in Program Mode.
0x800000	Compatibility mode file missing or communication zone problem.
0x900000	Remote node cannot buffer command.
0xA00000	Wait ACK (1775 KA buffer full).
0xB00000	Not used.
0xC00000	Not used.
0xD00000	Error code in the EXT STS byte. See the error code table below.
0xE00000	Fewer levels specified in address than minimum for any address.
0xF00300	More levels specified in address than system supports.
0xF00400	Symbol not found.
0xF00500	Symbol is of improper format.
0xF00600	Address does not point to something usable.
0xF00700	File is wrong size.
0xF00800	Cannot complete request, situation has changed since start of the command.
0xF00900	Data or file size is too large.
0xF00900	Transaction size plus word address is too large.
0xF00B00	Access denied; improper privilege. This will occur if data file is set to constant or protected.
0xF00C00	Condition cannot be generated; resource is not available.
0xF00D00	Condition already exists; resource is readily available.

(PLC generated error codes for the Allen-Bradley EtherNet/IP protocol for MicroLogix 1100, 1400, SLC 5/05, or ENI Adapter continued on the next page.)

Allen-Bradley – EtherNet/IP Protocol – PLC Error Code Tables MicroLogix 1100 , 1400 & SLC 5/05, both via native Ethernet port; MicroLogix 1000, 1100, 1200, 1400, 1500, SLC 5/03/04/05, all via ENI Adapter

PLC Errors for Allen-Bradley EtherNet/IP Protocol – Service Packet Errors (Error code 0xaabbbb returned from the PLC.)	
Panel Error Code PLC-498 Hex Value	**Description**
0xF00E00	Command cannot be executed.
0xF00F00	Histogram overflow.
0xF01000	No access.
0xF01100	Illegal data type.
0xF01200	Invalid parameter or invalid data.
0xF01300	Address reference exists to deleted area.
0xF01400	Command execution failure for unknown reason; possible histogram overflow.
0xF01500	Data conversion error.
0xF01600	Scanner not able to communicate with 1771 rack adapter.
0xF01700	Type mismatch.
0xF01800	1771 module response was not valid.
0xF01900	Duplicated label.
0xF02200	Remote rack fault.
0xF02300	Timeout.
0xF02400	Unknown error.
0xF01A00	File is open; another node owns it.
0xF01B00	Another node is the program owner.
0xF01C00	Reserved.
0xF01D00	Reserved.
0xF01E00	Data table element protection violation.
0xF01F00	Temporary internal problem.

Generic EtherNet IP Protocol – PLC Error Codes

Only errors as listed in the Touch Panel Error Code Table shown on page A-3 can occur when using the Generic Ethernet IP protocol, there are no PLC generated errors.

GE 90-30 – Panel Error Code PLC-499 Explanation

The PLC-499 error code is used to show any errors that are generated by the connected PLC. The PLC-499 error message includes a four digit hexadecimal value embedded in the message. This value can be looked up in the specific PLC's error tables to determine the cause of the error.The possible PLC generated error codes for the GE 90-30 communication protocol are represented by a hexadecimal value as shown in the following message example.

GE 90-30 Error Code PLC-499 Message Example:

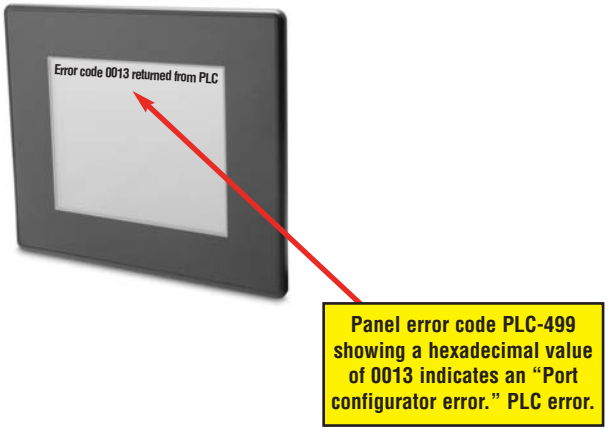

GE 90-30 SNPX Protocol – PLC Error Code Tables

The following table lists the errors that can be generated by the GE 90-30 PLC when using the SNPX protocol.

Note: *The following errors can be generated from the designated PLC, are monitored by the* ***C-more*** *touch panel, and displayed on the touch panel's screen as a hexadecimal value in panel error code PLC-499 message, if active. Please refer to the PLC manufacturer's documentation for additional information.*

PLC Errors for GE 90-30 SNPX Protocol (Major)	
Panel Error Code PLC-499 Hex Value	**Description**
No error	Successful completion. (This is the expected completion value in the COMMREQ Status Word.)
0x0002	Insufficient Privilege. For Series 90-70 PLC, the minor error code contains the privilege level required for the service request.
0x0004	Protocol Sequence Error. The CPU has received a message that is out of order.
0x0005	Service Request Error, the minor error code contains the specific error code.
0x0006	Illegal Mailbox Type. Service request mailbox type is either undefined or unexpected.
0x0007	The PLC CPU's Service Request Queue is full. The master should retry later. It is recommended that the master wait a minimum of 10 msec before sending another service request.
0x000A	SNP DOS Driver Error. The minor error code contains the specific error code.
0x000B	Illegal Service Request. The requested service is either not defined or not supported. (This value is returned in lieu of the actual 01h value passed in the SNP error message, to avoid confusion with the normal successful COMMREQ completion.)
0x000C	Local SNP/SNP-X Error. An error occurred within the SNP task in the CMM module in this PLC. This error may occur in either an SNP master or an SNP slave. The minor error code contains the specific error code.
0x000D	Remote SNP Error. An error occurred within the SNP slave task in the CMM module in the remote PLC. The minor error code contains the specific error code.
0x000E	Autodial Error. An error occurred while attempting to send a command string to an attached external modem. The minor error code contains the specific error code.
0x000F	SNP-X slave error. An error occurred within the SNPX task in the remote slave device. The minor error code contains the specific error code.
0x0013	Port configurator error.
0x0050	Problem with sending mail to the slave Service Request task. (Series 90-70 PLC CPUs only)
0x0051	Problem with getting mail from the slave Service Request task. (Series 90-70 PLC CPUs only)
0x0055	Slave SNP task timed out before receiving an SRP response. (Series 90-70 PLC CPUs only)
0x0056	Slave SNP task could not find the requested datagram connection. (Series 90-70 PLC CPUs only)
0x0057	Slave SNP task encountered an error in trying to write the datagram. (Series 90-70 PLC CPUs only)
0x0058	Slave SNP task encountered an error in trying to update the datagram. (Series 90-70 PLC CPUs only)

(PLC generated error codes for the GE 90-30 SNPX protocol continued on the next page.)

GE 90-30 SNPX Protocol – PLC Error Code Tables (cont'd)

PLC Errors for GE 90-30 SNPX Protocol (Minor-Major) (cont'd)	
Panel Error Code PLC-499 Hex Value	**Description**
PLC Error 0x010C	WAIT-type COMMREQ is not permitted; must use NOW AIT-type.
PLC Error 0x010E	Not used
PLC Error 0x010F	The service request code in an X-Request message is unsupported or invalid at this time. This error may occur if an SNP-X communication session has not been success fully established at the slave device.
PLC Error 0x020C	COMMREQ command is not supported.
PLC Error 0x020E	The modem command string length exceeds 250 characters.
PLC Error 0x020F	Insufficient privilege level in the slave PLC CPU for the requested SNP-X service. Password protection at PLC CPU may be preventing the requested service.
PLC Error 0x0213	Unsupported COMMREQ. These errors are only generated when there is no protocol currently being run on a port, and the port receives a COMMREQ. (The port may be disabled or an error has occurred in processing a new configuration).
PLC Error 0x030C	SNP communication is not active. Must initiate a new SNP communication by sending an Attach or Long Attach COMMREQ.
PLC Error 0x030E	COMMREQ Data Block Length is too small. Output command string data is missing or incomplete.
PLC Error 0x030F	Invalid slave memory type in X-Request message.
PLC Error 0x0313	Invalid COMMREQ length.
PLC Error 0x040C	SNP slave did not respond to Attach message from master.
PLC Error 0x040E	Serial output timeout. The CMM module was unable to transmit the modem autodial output from the serial port. (May be due to missing CTS signal when the CMM is configured to use hardware flow control.)
PLC Error 0x040F	Invalid slave memory address or range in X-Request message.
PLC Error 0x0413	Invalid COMMREQ status word location.
PLC Error 0x050C	Unable to write SNP Status Word to local PLC memory; may be due to invalid Status Word memory type or address.
PLC Error 0x050E	Response was not received from modem. Check modem and cable.
PLC Error 0x050F	Invalid data length in X-Request message. Data length must be non-zero, and may not exceed decimal 1000 bytes.
PLC Error 0x0513	Invalid COMMREQ data.
PLC Error 0x060C	Master device memory type is not valid in this PLC.
PLC Error 0x060E	Modem responded with BUSY. Modem is unable to complete the requested connection. The remote modem is already in use; retry the connection request at a later time.
PLC Error 0x060F	X-Buffer data length does not match the service request in X-Request message. The X-Buffer message length is obtained from the Next Message Length field in the X-Request message; the length of the data within the buffer message is always the message length.
PLC Error 0x070C	Master device memory address or length is zero.
PLC Error 0x070E	Modem responded with NO CARRIER. Modem is unable to complete the requested connection. Check the local and remote modems and the telephone line.
PLC Error 0x070F	Queue Full indication from Service Request Processor in slave PLC CPU. The slave is temporarily unable to complete the service request. The master should try again later. It is recommended that the master wait at least 10 msec before repeating the X-Request.

(PLC generated error codes for the GE 90-30 SNPX protocol continued on the next page.)

GE 90-30 SNPX Protocol – PLC Error Code Tables (cont'd)

PLC Errors for GE 90-30 SNPX Protocol (Minor-Major) (cont'd)	
Panel Error Code PLC-499 Hex Value	**Description**
0x080C	Unable to read or write master device memory locations specified in COMMREQ. Usually caused by invalid memory address for this PLC. SNP message exchange may have taken place.
0x080E	Modem responded with NO DIALTONE. Modem is unable to complete the requested connection. Check the modem connections and the telephone line.
0x080F	Service Request Processor response exceeds 1000 bytes; the SNP-X slave device cannot return the data in an X-Response message. (This error applies to CMM module only.)
0x090C	Master device memory data length exceeds maximum data size of CMM module (2048 bytes). Must use a smaller data length. Use multiple COMMREQs if total data length exceeds this maximum value.
0x090E	Modem responded with ERROR. Modem is unable to complete the requested command. Check the modem command string and modem.
0x0A0C	Slave device memory type is missing or not valid.
0x0A0E	Modem responded with RING, indicating that the modem is being called by another modem. Modem is unable to complete the requested command. Retry the modem command at a later time.
0x0B0C	Slave device memory address is missing or zero.
0x0B0E	An unknown response was received from the modem. Modem is unable to complete the requested command. Check the modem command string and modem. The modem response is expected to be either CONNECT or OK.
0x0C0C	COMMREQ Data Block Length is too small. (When expected COMMREQ length is 6 words or less. An improper length may cause other minor error codes 6-11.)
0x0D0C	Invalid Diagnostic Status Word (DSW) starting word or length.
0x0E0C	Invalid maximum SNP message data size. Must be an even value from 42 to 2048.
0x0F0C	Invalid Privilege Level. Must be 0 through 4 or -1.
0x100C	Invalid Fault Table selector. Must be 1 for I/O Fault Table, or 2 for PLC Fault Table.
0x100F	Unexpected Service Request Processor error. (This error applies to CMM module only; the unexpected SRP error code is saved in the Diagnostic Status Words in the CMM module.)
0x110C	Invalid Fault Table starting index. Must be 1-32 for I/O Fault Table, or 1-16 for PLC.
0x120C	Invalid fault count. Must be 1-32 for I/O Fault Table, or 1-16 for PLC Fault Table.
0x130C	Invalid Set PLC Date/Time mode. Must be 1-4.
0x140C	Invalid Set PLC Date/Time date, time, or day-of-week value.
0x150C	Unable to retrieve master device PLC time/date from PLC CPU.
0x150F	Requested service is not permitted in a Broadcast request. The master must direct the X-Request message to a specific SNP-X slave device.
0x160C	Invalid slave PLC type. Must be 0 for Series 90-70, or 1 for Series 90-30 or Series 90-20.
0x170C	Invalid datagram type. Must be 01h for normal datagram, or 81h (129) for permanent datagram.
0x180C	Missing or too many datagram point formats. Must be 1-32.
0x190C	Invalid datagram point format data.

(PLC generated error codes for the GE 90-30 SNPX protocol continued on the next page.)

GE 90-30 SNPX Protocol – PLC Error Code Tables (cont'd)

PLC Errors for GE 90-30 SNPX Protocol (Minor-Major) (cont'd)	
Panel Error Code PLC-499 Hex Value	**Description**
0x1A0C	Datagram area size is too small to include data for all specified point formats.
0x1B0C	Invalid number of Control Program Names. Must be 1-8.
0x1C0C	SNP-X Request exceeds maximum data size (1000 bytes). Must use a smaller data length. Use multiple COMMREQs if necessary.
0x1D0C	Invalid SNP-X communication session type. Must be 0 for a single slave device, or 1 for multiple slave devices.
0x1E0C	Illegal destination SNP ID specified for SNP-X slave. Must be 0-7 ASCII characters, plus a terminating null character (00h). The Null SNP ID (eight bytes of 00h) may be used to specify any single device. The Broadcast SNP ID (eight bytes of FFh) may be use to specify all slave devices on the serial link.
0x1F0C	Destination SNP ID does not match SNP-X session type. The Broadcast SNP ID is not permitted in a single-slave SNP-X session. The Null SNP ID is not permitted in a multiple-slave SNP-X session.
0x200C	Inactivity timeout (T3'). The SNP slave has not received any new SNP messages within the configured T3' time interval.
0x200F	Invalid Message Type field in a received X-Request message. The message type of an X-Request message must be 58h = 'X'.
0x210C	A Parity error has occurred on an Attach, Attach Response, or Update Real–time Datagram message. Communications have not been established.
0x210F	Invalid Next Message Type or Next Message Length field in a received X Request message. If this request does not use a buffer (0-2 bytes of data), the Next Message Type must be zero. If this request will be followed with a buffer message (more than 2 byte.)), the Next Message Type must be 54h = 'T', and the Next Message Length must specify the length of the X-Buffer message. Valid X-Buffer message lengths are 9-1008 bytes (data length plus 8 bytes).
0x220C	A BCC (Block Check Code) error has occurred on an Attach, Attach Response, or Update Realtime Datagram message. Communications have not been established.
0x220F	Invalid Message Type field in a received X-Buffer message. The message type of an X-Buffer message must be 54h = 'T'.
0x230C	A Framing or Overrun serial error has occurred on an Attach, Attach Response, or Update Realtime Datagram message. Communications have not been established.
0x230F	Invalid Next Message Type field in a received X-Buffer message. Since an X-Buffer message is never followed by another message, the Next Message Type must always be zero.
0x240C	An invalid SNP message type was received when an Attach, Attach Response, or Update Realtime Datagram message was required. Communications have not been established.
0x250C	An invalid next message length value was specified in an Attach, Attach Response, or Update Realtime Datagram message. Communications have not been established.
0x260C	An unexpected SNP message type was received when an Attach, Attach Response, or Update Realtime Datagram was required. Communications have not been established.
0x270C	Another Break was received while SNP slave was waiting for an Attach or Update Realtime Datagram message.
0x280C	An SNP message has been sent and retried the maximum number of times. A maximum of two retries are permitted. A retry is caused by a NAK from from the remote SNP device.
0x290C	A received SNP message has been NAKed the maximum number of two times. The NAKed message may be retransmitted a maximum of two times.

(PLC generated error codes for the GE 90-30 SNPX protocol continued on the next page.)

GE 90-30 SNPX Protocol – PLC Error Code Tables (cont'd)

PLC Errors for GE 90-30 SNPX Protocol (Minor-Major) (cont'd)	
Panel Error Code PLC-499 Hex Value	**Description**
0x2A0C	An unknown message was received when an acknowledge (ACK or NAK) was required.
0x2B0C	Sequence Error. An unexpected SNP message type was received.
0x2C0C	Received SNP message contains bad next message length value.
0x2D0C	Acknowledge timeout. An acknowledge (ACK or NAK) was not received within the configured T2 time interval. A slave device may generate this error if the master device has aborted after maximum response NAKs and does not NAK the next response retry.
0x2E0C	Response timeout. The SNP Master did not receive an SNP Response message within the configured T5' time interval.
0x2F0C	Buffer message timeout. An expected Text Buffer or Connection Data message was not received within the configured T5" time interval.
0x300C	Serial output timeout. The CMM module was unable to transmit a Break, an SNP message, or SNP acknowledge (ACK or NAK) from the serial port. (May be due to missing CTS signal when the CMM module is configured to use hardware flow control.)
0x310C	SNP slave did not receive a response from the Service Request Processor in the PLC CPU.
0x320C	COMMREQ timeout. The COMMREQ did not complete within the configured time interval.
0x330C	An SNP Request or Response was aborted prior to completion due to reception of a Break.
0x340C	PLC backplane communications error
0x350C	Invalid Piggyback Status data memory type or address. Communications have not been established.
0x360C	Invalid SNP Slave SNP ID. Must be a 0-7 ASCII characters, plus a terminating null character (00h). The Null SNP ID (eight bytes of 00h) may be used to specify any single slave device.
0x370C	The SNP master has received a response message containing an unexpected data length. Usually indicates a problem with the remote SNP slave device. May occur when Series 90-70 commands (Task Memory or Program Block Memory Read/Write) are issued to a Series 90-30 slave device.
0x380C	Response code in received SNP-X response message does not match expected value. (Response code must equal the request code +80h.)
0x390C	SNP-X Response message exceeds maximum data size (decimal 1000 bytes). Data in the Response is ignored.
0x400C	A parity error has occurred on an X-Attach Response message when establishing a new SNP-X communication session. Communications have not been established.
0x400D	The requested service is not supported by the SNP slave.
0x400F	Serial output timeout. The slave was unable to transmit an SNP-X message from the serial port. (May be due to missing CTS signal when the CMM module is configured to use hardware flow control.)

(PLC generated error codes for the GE 90-30 SNPX protocol continued on the next page.)

GE 90-30 SNPX Protocol – PLC Error Code Tables (cont'd)

PLC Errors for GE 90-30 SNPX Protocol (Minor-Major) (cont'd)	
Panel Error Code PLC-499 Hex Value	**Description**
0x410C	A framing or overrun error has occurred on an X-Attach Response message when establishing a new SNP-X communication session. Communications have not been established.
0x410D	SNP slave on CMM module requires PLC CPU privilege level 2 to operate. The SNP slave has rejected a request to change to a higher or lower privilege level.
0x410F	An SNP-X request was aborted prior to completion due to reception of a Break.
0x420C	A BCC (Block Check Code) error has occurred on an X-Attach Response message when establishing a new SNP-X communication session. Communications have not been established.
0x420D	SNP Request or Response message exceeds maximum data length of the CMM module. (Total data length for Mailbox and all following Buffer messages is 2048 bytes.) The master must use a smaller data length. Use multiple requests if total data length exceeds the maximum value.
0x420F	An X-Buffer message was received containing greater than 1000 bytes of data. The data is ignored.
0x430C	An invalid message type was received when an X-Attach Response was required when establishing a new SNP-X communication session. Communications have not been established.
0x430D	Improper Write Datagram message format. Series 90-70 slave devices use a different format for this message than Series 90-30 or Series 90-20 slave devices. The master must use the proper message format for this SNP slave device. (The SNP master in the CMMmodule sends this message as part of the Establish Datagram COMMREQ command. The datagram has been partially established, but is not usable; the datagram should be cancelled by using the Datagram ID returned by the COMMREQ.)
0x430F	The SNP-X slave did not receive a response from the Service Request Processor in the PLC CPU.
0x440C	An invalid next message type value was detected in an X-Attach Response message when establishing a new SNP-X communication session. Communications have not been established.
0x440D	A datagram error occurred in a Series 90-70 slave device (dual-port error).
0x440F	PLC backplane communications error.
0x450C	An invalid response code was detected in an X-Attach Response message when establishing a new SNP-X communication session. Communications have not been established.
0x460C	An expected X-Attach Response message was not received within the response timeout interval when establishing a new SNP-X communication session. The master has retried the X-Attach message twice without receiving a response. Communications have not been established.
0x500C	A parity error has occurred on an X-Attach Response message when re-establishing an existing SNP-X communication session. Communications have not been established.
0x500F	A parity error has occurred in a received X-Attach message.
0x510C	A framing or overrun error has occurred on an X-Attach Response message when re-establishing an existing SNP-X communication session. Communications have not been established.
0x510F	A framing or overrun error has occurred in a received X-Attach message.
0x520C	A BCC (Block Check Code) error has occurred on an X-Attach Response message when re-establishing an existing SNP-X communication session. Communications have not been established.
0x520F	A BCC (Block Check Code) error has occurred in a received X-Attach message.

(PLC generated error codes for the GE 90-30 SNPX protocol continued on the next page.)

GE 90-30 SNPX Protocol – PLC Error Code Tables (cont'd)

PLC Errors for GE 90-30 SNPX Protocol (Minor-Major) (cont'd)	
Panel Error Code PLC-499 Hex Value	**Description**
0x530C	An invalid message type was received when an X-Attach Response was required when re-establishing an existing SNP-X communication session. Communications have not been established.
0x530F	An invalid Message Type was received when an X-Attach message was required. (For an X-Attach message, the message type must be 58h = 'T'.)
0x540C	An invalid Next Message Type value was detected in an X-Attach Response message when re-establishing an existing SNP-X communication session. Communications have not been established.
0x540F	An invalid Next Message Type value was detected in a received X-Attach message. (For an X-Attach message, the Next Message Length must be zero.)
0x550C	An invalid response code was detected in an X-Attach Response message when re-establishing an existing SNP-X communication session. Communications have not been established.
0x550F	An invalid request code was detected in a received X-Attach message.
0x560C	An expected X-Attach Response message was not received within the response timeout interval when re-establishing an existing SNP-X communication session. The master has retried the X-Attach message twice without receiving a response. Communications have not been established.
0x600C	A parity error has occurred on an X-Response message.
0x600F	A parity error has occurred in a received X-Request message.
0x610C	A framing or overrun error has occurred on an X-Response message.
0x610F	A framing or overrun error has occurred in a received X-Request message.
0x620C	A BCC (Block Check Code) error has occurred on an X-Response message.
0x620F	A BCC (Block Check Code) error has occurred in a received X-Request message.
0x630C	An invalid message type was received when an X-Response message was required.
0x640C	An invalid next message type value was detected in an X-Response message.
0x650C	An invalid response code was detected in an X-Response message.
0x660C	An expected X-Response message was not received within the response time.
0x700C	A parity error has occurred on an Intermediate Response message.
0x700F	A parity error has occurred in a received X-Buffer message.
0x710C	A framing or overrun error has occurred on an Intermediate Response message.
0x710F	A framing or overrun error has occurred in a received X-Buffer message.
0x720C	A BCC (Block Check Code) error has occurred on an Intermediate Response message.
0x720F	A BCC(Block Check Code) error has occurred in a received X-Buffer message.
0x730C	An invalid message type was received when an Intermediate Response message was required.
0x730F	An expected X-Buffer message was not received.
0x740C	An invalid next message type value was detected in an Intermediate Response message.
0x750C	An invalid response code was detected in an Intermediate Response message.
0x760C	An expected Intermediate Response message was not received within the response timeout interval.

(PLC generated error codes for the GE 90-30 SNPX protocol continued on the next page.)

GE 90-30 SNPX Protocol – PLC Error Code Tables (cont'd)

PLC Errors for GE 90-30 SNPX Protocol (Minor-Major) (cont'd)	
Panel Error Code PLC-499 Hex Value	**Description**
0x8D0A	Bad DOS Version. Must have DOS 2.0, or later, to support the SNP DOS Driver.
0x8E0A	PC Serial port configured for SNP Master driver is not open; no communication can take place.
0x8F0A	Out–of–Sequence SNP message. SNP message type received was not the type expected.
0x900A	Bad SNP BCC encountered. Transmission was aborted after maximum retries due to a bad Block Check Code.
0x910A	Bad SNP communication. Transmission was aborted after maximum retries due to serial errors (that is, parity, overrun, or framing errors).
0x920A	No SNP communication. Either communication has been lost or a communication session has not been established.
0xC105	Invalid block state transition.
0xC205	The OEM key is NULL (inactive).
0xC305	Text length does not match traffic type.
0xC405	Verify with FA Card or EEPROM failed.
0xC505	No task–level Rack/Slot configuration to read or delete.
0xC605	Control Program (CP) tasks exist but requestor not logged into main CP.
0xC705	Passwords are set to inactive and cannot be enabled or disabled.
0xC805	Password(s) already enabled and can not be forced inactive.
0xC905	Login using non–zero buffer size required for block commands.
0xCA05	Device is write–protected.
0xCB05	A comm or write verify error occurred during save or restore.
0xCC05	Data stored on device has been corrupted and is no longer reliable.
0xCD05	Attempt was made to read a device but no data has been stored on it.
0xCE05	Specified device has insufficient memory to handle request.
0xCF05	Specified device is not available in the system (not present).
0xD005	One or more PLC modules configured have unsupported revision.
0xD105	Packet size or total program size does not match input.
0xD205	Invalid write mode parameter.
0xD305	User Program Module (UPM) read or write exceeded block end.
0xD405	Mismatch of configuration checksum.
0xD505	Invalid block name specified in datagram.
0xD605	Total datagram connection memory exceeded.
0xD705	Invalid datagram type specified.
0xD805	Point length not allowed.
0xD905	Transfer type invalid for this Memory Type selector.
0xDA05	Null pointer to data in Memory Type selector.
0xDB05	Invalid Memory Type selector in datagram.
0xDC05	Unable to find connection address.
0xDD05	Unable to locate given datagram connection ID.
0xDE05	Size of datagram connection invalid.
0xDF05	Invalid datagram connection address.

(PLC generated error codes for the GE 90-30 SNPX protocol continued on the next page.)

GE 90-30 SNPX Protocol – PLC Error Code Tables (cont'd)

PLC Errors for GE 90-30 SNPX Protocol (Minor-Major) (cont'd)	
Panel Error Code PLC-499 Hex Value	**Description**
0xE005	Service in process cannot login.
0xE105	No I/O configuration to read or delete.
0xE205	IOS could not delete configuration, or bad type.
0xE305	CPU revision number does not match.
0xE405	Memory Type for this selector does not exist.
0xE505	DOS file area not formatted.
0xE605	CPU model number does not match.
0xE705	Configuration is not valid.
0xE805	No user memory is available to allocate.
0xE905	Memory Type selector not valid in context.
0xEA05	Not logged in to process service request.
0xEB05	Task unable to be deleted.
0xEC05	Task unable to be created.
0xED05	VME bus error encountered.
0xEE05	Could not return block sizes.
0xEF05	Programmer is already attached.
0xF005	Request only valid in stop mode.
0xF105	Request only valid from programmer.
0xF205	Invalid program cannot log in.
0xF305	I/O configuration mismatch.
0xF405	Invalid input parameter in request.
0xF505	Invalid password.
0xF605	Invalid sweep state to set.
0xF705	Required to log in to a task for service.
0xF805	Invalid Task Name referenced.
0xF905	Task address out of range.
0xFA05	Cannot replace I/O module.
0xFB05	Cannot clear I/O configuration.
0xFC05	I/O configuration is invalid.
0xFD05	Unable to perform auto configuration.
0xFE05	No privilege for attempted operation.
0xFF05	Service Request Error has been aborted.

Mitsubishi FX Protocol – PLC Error Codes

Only errors as listed in the Touch Panel Error Code Table shown on page A-3 can occur when using the Mitsubishi FX protocol, there are no PLC generated errors.

Omron – Panel Error Code PLC-499 Explanation

The PLC-499 error code is used to show any errors that are generated by the connected PLC. The PLC-499 error message includes a four digit hexadecimal value embedded in the message. This value can be looked up in the specific PLC's error tables to determine the cause of the error. The possible PLC generated error codes for the Omron Host Link and FINS communication protocol are represented by a hexadecimal value as shown in the following message example.

Omron Error Code PLC-499 Message Example:

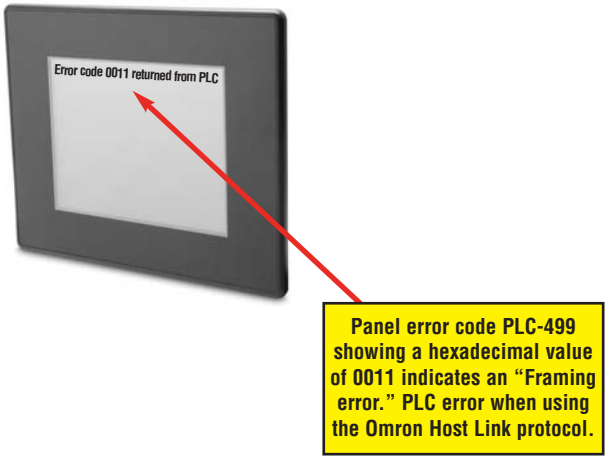

Omron Host Link Protocol – PLC Error Code Table

The following table lists the errors that can be generated by the Omron PLC when using the Host Link protocol.

Note: *The following errors can be generated from the designated PLC, are monitored by the* ***C-more*** *touch panel, and displayed on the touch panel's screen as a hexadecimal value in panel error code PLC-499 message, if active. Please refer to the PLC manufacturer's documentation for additional information.*

PLC Error Codes for Omron Host Link	
Panel Error Code PLC-499 Hex Value	**Description**
0x0000	Normal Completion.
0x0001	Not executable in RUN mode.
0x0002	Not executable in MONITOR mode.
0x0003	Not executable with PROM mounted.
0x0004	Address over (data overflow).
0x000B	Not executable in PROGRAM mode.
0x000C	Not executable in DEBUG mode.
0x000D	Not executable in LOCAL mode.
0x0010	Parity error.
0x0011	Framing error.
0x0012	Overrun.
0x0013	FCS error.
0x0014	Format error (parameter length error).
0x0015	Entry number data error (parameter error, data code error, data length error).
0x0016	Instruction not found.
0x0018	Frame length error.
0x0019	Not executable (due to Un-executable error clear, non-registration of I/O table, etc.).
0x0020	I/O table generation impossible (unrecognized remote I/O unit, channel over, duplication of optical transmitting I/O unit).
0x00A0	Abort due to parity error in transmit data under process.
0x00A1	Abort due to framing error in transmit data under process.
0x00A2	Abort due to overrun in transmit data under process.
0x00A3	Abort due to FCS error in transmit data under process.
0x00A4	Abort due to format error in transmit data under process.
0x00A5	Abort due to frame length error in transmit data under process.
0x00A8	Abort due to entry number data error in transmit data under process.
0x00B0	Un-executable due to program area capacity other than 16k bytes.

Omron FINS Protocol – PLC Error Code Table

The following table lists the errors that can be generated by the Omron PLC when using the FINS protocol.

Note: *The following errors can be generated from the designated PLC, are monitored by the* ***C-more*** *touch panel, and displayed on the touch panel's screen as a hexadecimal value in panel error code PLC-499 message, if active. Please refer to the PLC manufacturer's documentation for additional information.*

PLC Error Codes for Omron FINS	
Panel Error Code PLC-499 Hex Value	**Description**
0x0000	Normal Completion.
0x0001	Service Canceled.
0x0101	Local Error: Local node not in network.
0x0102	Local Error: Token Timeout.
0x0103	Local Error: Retries Failed.
0x0104	Local Error: Too many send frames.
0x0105	Local Error: Node address range error.
0x0106	Local Error: Node Address Duplication.
0x0201	Destination Node Error: Destination Node not in network.
0x0202	Destination Node Error: Unit Missing.
0x0203	Destination Node Error: Third Node missing.
0x0204	Destination Node Error: Destination Node busy.
0x0205	Destination Node Error: Response Timeout.
0x0301	Controller Error: Communications Controller Error.
0x0302	Controller Error: CPU Unit Error.
0x0303	Controller Error: Controller Error.
0x0304	Controller Error: Unit number Error.
0x0401	Service Unsupported: Undefined Command.
0x0402	Service Unsupported: Not supported by Model/Version.
0x0501	Routing Table Error: Destination address setting error.
0x0502	Routing Table Error: No routing tables.
0x0503	Routing Table Error: Routing table error.
0x0504	Routing Table Error: Too many delays.
0x1001	Command Format Error: Command too long.
0x1002	Command Format Error: Command too short.
0x1003	Command Format Error: Elements/Data don't match.
0x1004	Command Format Error: Command format error.
0x1005	Command Format Error: Header Error.
0x1101	Parameter Error: Area classification missing.
0x1102	Parameter Error: Access Size Error.
0x1103	Parameter Error: Address range error.

(PLC generated error codes for the Omron FINS protocol continued on the next page.)

Omron FINS Protocol – PLC Error Code Table (cont'd)

PLC Error Codes for Omron FINS	
Panel Error Code PLC-499 Hex Value	**Description**
0x1104	Parameter Error: Address range exceeded.
0x1106	Parameter Error: Program Missing.
0x1109	Parameter Error: Relational Error.
0x110A	Parameter Error: Duplicate Data Access.
0x110B	Parameter Error: Response too long.
0x110C	Parameter Error: Parameter Error.
0x2002	Read Not Possible: Protected.
0x2003	Read Not Possible: Table missing.
0x2004	Read Not Possible: Data missing.
0x2005	Read Not Possible: Program missing.
0x2006	Read Not Possible: File missing.
0x2007	Read Not Possible: Data mismatch.
0x2101	Write Not Possible: Read Only.
0x2102	Write Not Possible: Protected - cannot write data link table.
0x2103	Write Not Possible: Cannot register.
0x2105	Write Not Possible: Program missing.
0x2106	Write Not Possible: File missing.
0x2107	Write Not Possible: File name already exists.
0x2108	Write Not Possible: Cannot change.
0x2201	Not executable in current mode: Not possible during execution.
0x2202	Not executable in current mode: Not possible while running.
0x2203	Not executable in current mode: Wrong PLC mode (Program).
0x2204	Not executable in current mode: Wrong PLC mode (Debug).
0x2205	Not executable in current mode: Wrong PLC mode (Monitor).
0x2206	Not executable in current mode: Wrong PLC mode (Run).
0x2207	Not executable in current mode: Specified node not polling node.
0x2208	Not executable in current mode: Step cannot be executed.
0x2301	No such device: File device missing.
0x2302	No such device: Missing memory.
0x2303	No such device: Clock missing.
0x2401	Cannot Start/Stop: Table missing.
0x2502	Unit Error: Memory Error.
0x2503	Unit Error: I/O setting Error.
0x2504	Unit Error: Too many I/O points.
0x2505	Unit Error: CPU bus error.
0x2506	Unit Error: I/O Duplication.

(PLC generated error codes for the Omron FINS protocol continued on the next page.)

Omron FINS Protocol – PLC Error Code Table (cont'd)

PLC Error Codes for Omron FINS	
Panel Error Code PLC-499 Hex Value	**Description**
0x2507	Unit Error: I/O bus error.
0x2509	Unit Error: SYSMAC BUS/2 error.
0x250A	Unit Error: CPU Bus Unit Error.
0x250D	Unit Error: SYSMAC BUS No. duplication.
0x250F	Unit Error: Memory Error.
0x2510	Unit Error: SYSMAC BUS terminator missing.
0x2601	Command Error: No protection.
0x2602	Command Error: Incorrect password.
0x2604	Command Error: Protected.
0x2605	Command Error: Service already executing.
0x2606	Command Error: Service stopped.
0x2607	Command Error: No execution right.
0x2608	Command Error: Settings not complete.
0x2609	Command Error: Necessary items not set.
0x260A	Command Error: Number already defined.
0x260B	Command Error: Error will not clear.
0x3001	Access Right Error: No access right.
0x4001	Abort: Service aborted.

Omron – Panel Error Code P495 Explanation

The PLC-495 error code is used to show any errors that are generated by the connected PLC. The PLC-495 error message includes a four digit hexadecimal value embedded in the message. This value can be looked up in the specific PLC's error tables to determine the cause of the error. The possible PLC generated error codes for the Omron CS/CJ FINS ethernet communication protocol are represented by a hexadecimal value as shown in the following message example.

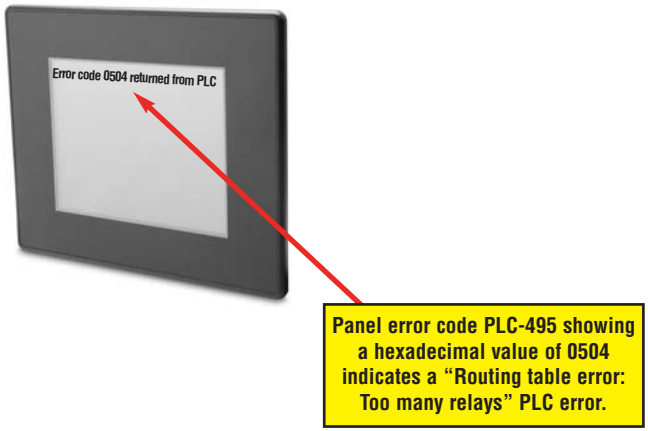

Omron CS/CJ FINS Ethernet Protocol – PLC Error Code Table

The following table lists the errors that can be generated by the Omron PLC when using the CS/CJ FINS Ethernet protocol.

Note: *The following errors can be generated from the designated PLC, are monitored by the* ***C-more*** *touch panel, and displayed on the touch panel's screen as a hexadecimal value in panel error code PLC-495 message, if active. Please refer to the PLC manufacturer's documentation for additional information.*

PLC Error Codes for Omron CS/CJ FINS Ethernet	
Panel Error Code PLC-495 Hex Value	**Description**
0103	Local Error: Send Error from lack of buffer space. Try reducing Ethernet load to the module.
0201	Destination Node Error: IP address of remote node not set correctly.
0202	Destination Node Error: No node with the specified unit address found.
0205	Destination Node Error: Packet corrupted or Response timeout. Try increasing timeout.
0301	Controller Error: Communications controller error.
0302	Controller Error: CPU Unit error. Check error LEDs on PLC. Refer to documentation for that CPU.
0304	Controller Error: Unit number error. Make sure Unit number is not used twice.
0401	Service unsupported: Undefined command.
0501	Routing table error: Destination address setting error. Routing table incorrect.
0502	Routing table error: No routing tables.
0503	Routing table error: Routing table error.
0504	Routing table error: Too many relays.
1001	Command format error: Command too long. Bad packet: check for electrical noise and grounding.
1002	Command format error: Command too short. Bad packet: check for electrical noise and grounding.
1003	Command format error: Elements/data don't match. Bad packet: check for electrical noise and grounding.
1005	Command format error: Header error. This is the error received when station # set in the command does not match the station # of the Ethernet module.
1100	Parameter error: UDP socket number bad.
1101	Parameter error: Address requested does not exist in PLC.
1103	Parameter error: Address area requested in not accessible.
220F	Status error: Duplicate Socket error.
2210	Status error: Specified socket not open.
2305	Environment Error: IP address conversion failed. Only encountered when using routing tables.
2307	Environment Error: IP address conversion set for automatic.
2503	Unit error: I/O setting error.
2505	Unit error: CPU bus error.
250A	Unit error: CPU Bus Unit error.

Siemens – Panel Error Code P499 Explanation

The PLC-499 error code is used to show any errors that are generated by the connected PLC. The PLC-499 error message includes a four digit hexadecimal value displayed at the end of the message. This value can be looked up in the specific PLC's error tables to determine the cause of the error. The possible PLC generated error codes for the Siemens PPI communication protocols breakdown into a four digit hexadecimal value as shown in the following message example.

Siemens Error Code PLC-499 Message Example:

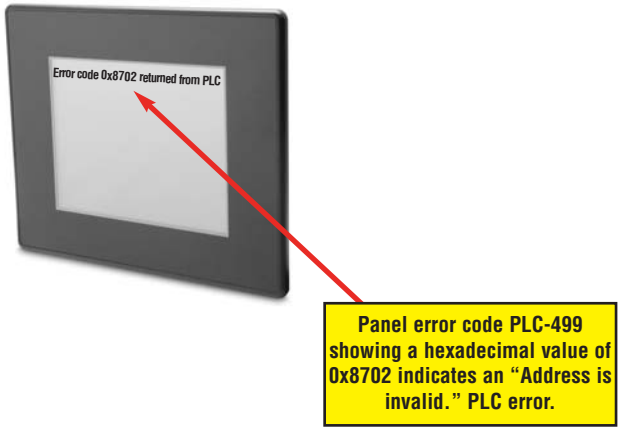

Siemens PPI Protocol – PLC Error Code Table

PLC PDU Header Errors for S7-200 PPI	
Panel Error Code PLC-499 Hex Value	**Description**
0x0001	Hardware Fault.
0x0003	Object access not allowed: Occurs when access to Timer and Counter data type is set to Signed Integer and not BCD.
0x0004	Context not supported.
0x0005	Address out of range: Occurs when requesting an address within a Data Block that does not exist or is out of range.
0x0006	Address out of range.
0x0007	Write Data size mismatch.
0x000A	Object does not exist: Occurs when trying to request a Data Block that does not exist.
0x8000	Function being used.
0x8001	Action is not allowed in current mode.
0x8101	Hardware fault.
0x8103	Access not allowed.
0x8104	Function not supported.
0x8105	Address invalid.
0x8106	Data Type not supported.
0x8107	Data Type is not consistent with size.
0x810A	Object does not exist.
0x8500	PDU Size is incorrect.
0x8702	Address is invalid.
0xD201	Block name syntax error.
0xD202	Error with function parameter.
0xD203	Error with block type.
0xD204	No linked block.
0xD205	Object already exists.
0xD206	Object already exists.
0xD207	Block already used in EPROM.
0xD209	Block does not exist.
0xD20E	No Block does not exist.
0xD210	Block number incorrect.

Siemens ISO over TCP Protocol – PLC Error Code Table

PLC PDU Header Errors for S7-300 CPU, S7-200 Ethernet	
Panel Error Code PLC-499 Hex Value	**Description**
0x0001	Hardware Fault.
0x0003	Object access not allowed: Occurs when access to Timer and Counter data type is set to Signed Integer and not BCD.
0x0004	Context not supported.
0x0005	Address out of range: Occurs when requesting an address within a Data Block that does not exist or is out of range.
0x0006	Address out of range.
0x0007	Write Data size mismatch.
0x000A	Object does not exist: Occurs when trying to request a Data Block that does not exist.
0x8000	Function being used.
0x8001	Action is not allowed in current mode.
0x8101	Hardware fault.
0x8103	Access not allowed.
0x8104	Function not supported.
0x8105	Address invalid.
0x8106	Data Type not supported.
0x8107	Data Type is not consistent with size.
0x810A	Object does not exist.
0x8500	PDU Size is incorrect.
0x8702	Address is invalid.
0xD201	Block name syntax error.
0xD202	Error with function parameter.
0xD203	Error with block type.
0xD204	No linked block.
0xD205	Object already exists.
0xD206	Object already exists.
0xD207	Block already used in EPROM.
0xD209	Block does not exist.
0xD20E	No Block does not exist.
0xD210	Block number incorrect.

Touch Panel Runtime Errors

Appendix B

In This Appendix...

Introduction B–2

Runtime Errors B–3

B

Introduction

The *C-more* touch panels have diagnostics built-in to the operating system that monitor various runtime functions that will display an error message on the panel's display indicating that a particular error has occurred and what the error represents. The **Error Message(s)** is displayed in the upper left area of the display screen. The **Runtime Errors** are also logged into the panel's **Error** log under the **Information** tab in the panel's **System Setup Screens**. The **Error Log Code**, such as **RTE-031**, is how the error is identified in the error log. See **Chapter 5: System Setup Screens** for additional details. The tables that follow show the possible **Runtime Errors** and include the error message, log error code, tag error code value, cause, etc.

The user can include in their touch panel project the use of this diagnostic information by using the system tag name **SYS ERR ERRORCODE** to control displayed screens, operator messages, etc., and also communicate error information to the PLC or controlling device. If a runtime error occurs, the **SYS ERR ERRORCODE** system tag will contain the numeric value shown under the **Tag Code Error Value**. For example, if a **Low Battery** runtime error is indicated, then the screen display will show **Low Battery** and the **SYS ERR ERRORCODE** system tag will contain the value **2031**. The value of the last runtime error detected will remain in the **SYS ERR ERRORCODE**.

If you have difficulty determining the cause of the error, refer to **Chapter 8: Troubleshooting** for additional help or contact our technical support group at 770-844-4200

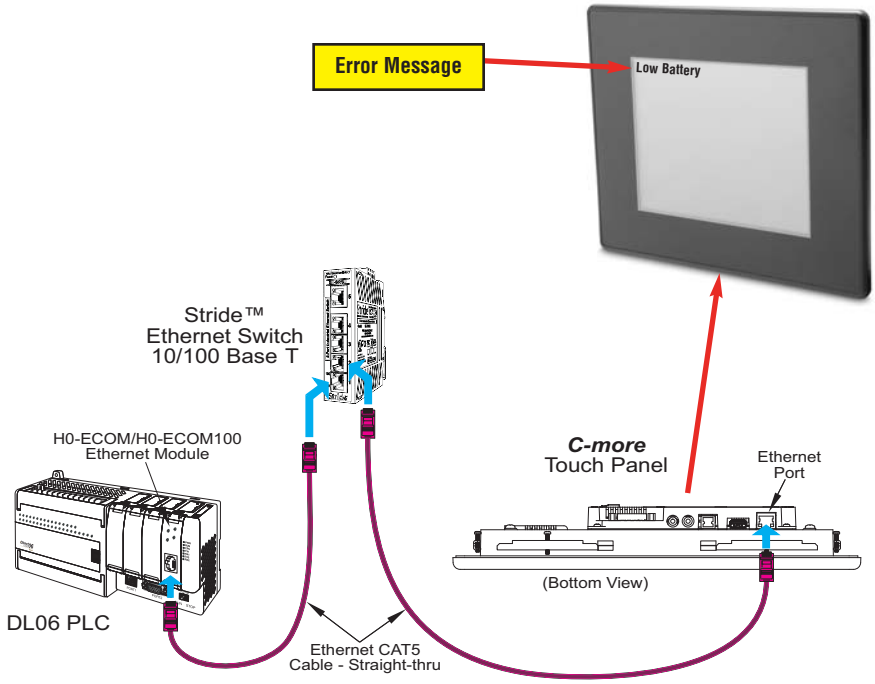

Runtime Errors

If there is more than one **Runtime Error**, then the **Error Message** displayed at the top of the panel's screen will display for 3 seconds, then be off for 2 seconds. The next **Error Message** will display for the same time increments, continue through any other active runtime error messages, and then start over. When only one **Runtime Error** is active, then that message will continuously be displayed until it is no longer active.

No.	Error Log Code	Error Message Located at upper left of screen	Error Message Tag	Tag Error Code Value	System Screen Info > Error	Cause
Log Error						
1	RTE-001	Log Failed. Not enough Memory Space in %Device%	SYS ERR ERRORCODE	2001	MM/DD/YY HH/MM/SS Error Code RTE-001	The size of the destination memory is not large enough to store the data.
2	RTE-002	Log Failed. %Device% cannot be found	SYS ERR ERRORCODE	2002	MM/DD/YY HH/MM/SS Error Code RTE-002	No device available or the device is defective.
3	RTE-003	Log Failed. Can not write file - %file%	SYS ERR ERRORCODE	2003	MM/DD/YY HH/MM/SS Error Code RTE-003	Logging the data has failed due to a problem such as the memory write protect is enabled.
4	RTE-004	Log cache memory is full	SYS ERR ERRORCODE	2004	MM/DD/YY HH/MM/SS Error Code RTE-004	The data log buffer in the SRAM memory is full.
Screen Capture						
1	RTE-011	Capture Failed. Not enough Memory Space in %Device%	SYS ERR ERRORCODE	2011	MM/DD/YY HH/MM/SS Error Code RTE-011	The size of the destination memory is not large enough to store the data.
2	RTE-012	Capture Failed. %Device% cannot be found	SYS ERR ERRORCODE	2012	MM/DD/YY HH/MM/SS Error Code RTE-012	No device available or the device is defective.
3	RTE-013	Capture Failed. Can not write file - %file%	SYS ERR ERRORCODE	2013	MM/DD/YY HH/MM/SS Error Code RTE-013	Logging the data has failed due to a problem such as the memory write protect is enabled.

Table continued on next page.

B

Runtime Errors (cont'd)

No.	Error Log Code	Error Message Located at upper left of screen	Error Message Tag	Tag Error Code Value	System Screen Info > Error	Cause
Handshake						
1	RTE-021	Handshake Timeout Error	SYS ERR ERRORCODE	2021	MM/DD/YY HH/MM/SS Error Code RTE-021	A communications timeout occurred when either a Recipe or Numeric Entry Object, in which Notification and Handshake signals are used, failed to complete the responses.
Battery						
1	RTE-031	Low Battery	SYS ERR ERRORCODE	2031	MM/DD/YY HH/MM/SS Error Code RTE-031	The panel's backup battery voltage level has fallen below 1.8 VDC and should be replaced.
e-mail						
1	RTE-041	E-mail Connection Error %Address%	SYS ERR ERRORCODE	2041	MM/DD/YY HH/MM/SS Error Code RTE-041	An incorrect SMTP address has been entered into the Touch Panel Network dialog screen.
2	RTE-042	Send E-mail Error %Address%	SYS ERR ERRORCODE	2042	MM/DD/YY HH/MM/SS Error Code RTE-042	An incorrect email address has been entered into the Address Book.
Send FTP						
1	RTE-051	FTP Connection Error %Address%&%ID%	SYS ERR ERRORCODE	2051	MM/DD/YY HH/MM/SS Error Code RTE-051	An incorrect FTP Service has been assigned into the Touch Panel Network dialog screen.
2	RTE-052	Send FTP Error %Address%&%ID%	SYS ERR ERRORCODE	2052	MM/DD/YY HH/MM/SS Error Code RTE-052	Permission to write to the FTP folder has not been authorized. The FTP site may require a user ID and password.
Sound						
1	RTE-081	Sound Failed. Not enough Memory	SYS ERR ERRORCODE	2081	MM/DD/YY HH/MM/SS Error Code RTE-081	The sound file failed to play due to insufficient memory.
Confiict						
1	RTE-091	IP Address Conflict - Corrct IP Address and Power Cycle	SYS ERR ERRORCODE	2091	MM/DD/YY HH/MM/SS Error Code RTE-091	Conflict of IP Address

Runtime Errors (cont'd)

No.	Error Log Code	Error Message Located at upper left of screen	Error Message Tag	Tag Error Code Value	System Screen Info > Error	Cause
Multiple Recipe						
1	RTE-101	Record doesn't exist	SYS ERR ERRORCODE	2101	MM/DD/YY HH/MM/SS Error Code RTE-101	The recipe file or data doesn't exist.
2	RTE-102	File cannot open	SYS ERR ERRORCODE	2102	MM/DD/YY HH/MM/SS Error Code RTE-102	The recipe file cannot be opened.
3	RTE-103	E-mail Connection Error %Address%	SYS ERR ERRORCODE	2103	MM/DD/YY HH/MM/SS Error Code RTE-103	Abnormality is found in the numberic character data of the recipe file.
4	RTE-104	Send E-mail Error %Address%	SYS ERR ERRORCODE	2104	MM/DD/YY HH/MM/SS Error Code RTE-104	Abnormality is found in the Tag data of the recipe file.
5	RTE-105	Recipe - Index (%Row%) error	SYS ERR ERRORCODE	2105	MM/DD/YY HH/MM/SS Error Code RTE-105	Recipe was operated by the record number outside the range.
6	RTE-106	Not enough buffer memory	SYS ERR ERRORCODE	2106	MM/DD/YY HH/MM/SS Error Code RTE-106	Memory allocation error
7	RTE-107	File cannot write	SYS ERR ERRORCODE	2107	MM/DD/YY HH/MM/SS Error Code RTE-107	There was an error trying to write the recipe file.
8	RTE-108	Wrong file format	SYS ERR ERRORCODE	2108	MM/DD/YY HH/MM/SS Error Code RTE-108	The recipe file format is incorrect.
9	RTE-109	Not enough Memory Space in %Device%	SYS ERR ERRORCODE	2109	MM/DD/YY HH/MM/SS Error Code RTE-109	Insufficient storage space on media.
Action						
1	RTE-121	Action Overflows	SYS ERR ERRORCODE	2121	MM/DD/YY HH/MM/SS Error Code RTE-121	The number of actions executed in the event exceeded the maximum number.
SRAM Error						
1	RTE-500	SRAM Check Sum Error	SYS ERR ERRORCODE	2500	MM/DD/YY HH/MM/SS Error Code RTE-500	Memory in Panel has been Corrupted by Power Loss, etc.

Mounting Clips Prior April 2006

Appendix C

In This Appendix...

Introduction C–2
EA7-S6M-R, S6C-R, S6M, S6C & T6C C–3
EA7-T8C C–5
EA7-T10C C–7
EA7-T12C C–9
EA7-T15C C–11

C

Introduction

The mounting clips supplied with *C-more* touch panels after April 2006 are slightly different than the original clips. **Appendix C: Mounting Clips Prior April 2006** has been included in the Hardware User Manual for the end user to have a reference to the drawings and information pertaining to the original mounting clips. The enclosure mounting thickness range and screw torque range has remained the same for each type of touch panel. The basic physical construction and use of the mounting clips remains the same, as does the various touch panel cutout dimensions.

The 6" touch panels use two long style mounting clips. The new 6" mounting clips have been redesigned to increase rigidity and also the screw position height has been increased to allow easier placement in the touch panel slots on thicker enclosures.

The 8"-15" touch panels, depending on the panel's size, use either 6 or 8 smaller style mounting clips. The new 8"-15" mounting clips have been made shorter in height to allow easier installation. Their rigidity remains the same.

Original
6" Mounting Clips

Original
8-15" Mounting Clip

Newer
6" Mounting Clips

Newer
8-15" Mounting Clip

C

EA7-S6M-R, S6C-R, S6M, S6C and T6C Original Mounting Clips

Dimensions:

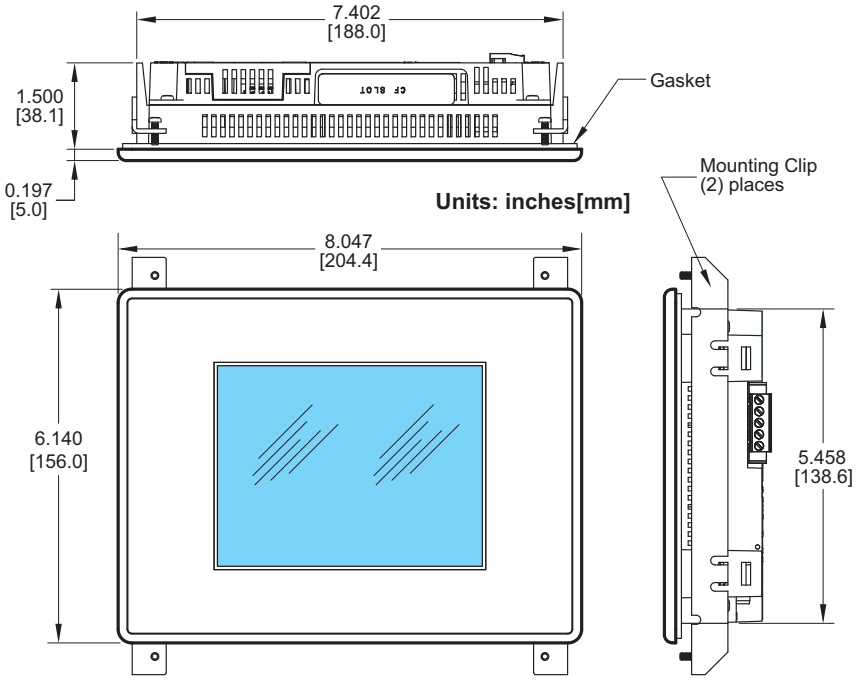

Enclosure Mounting Thickness Ranges and Mounting Clip Screw Torque

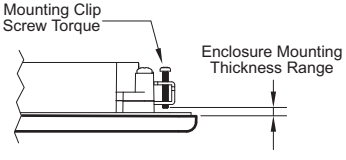

Touch Panel Size	Enclosure Thickness Range	Mounting Clip Screw Torque
6" – lower mounting clip position	0.039 - 0.24 inch [1 – 6 mm]	35 ~ 50 oz-in [0.25 ~ 0.35 Nm]
6" – upper mounting clip position	0.20 - 0.63 inch [5 – 16 mm]	35 ~ 50 oz-in [0.25 ~ 0.35 Nm]

EA7-S6M-R, S6C-R, S6M, S6C and T6C Original Mounting Clips

Cutout Dimensions:

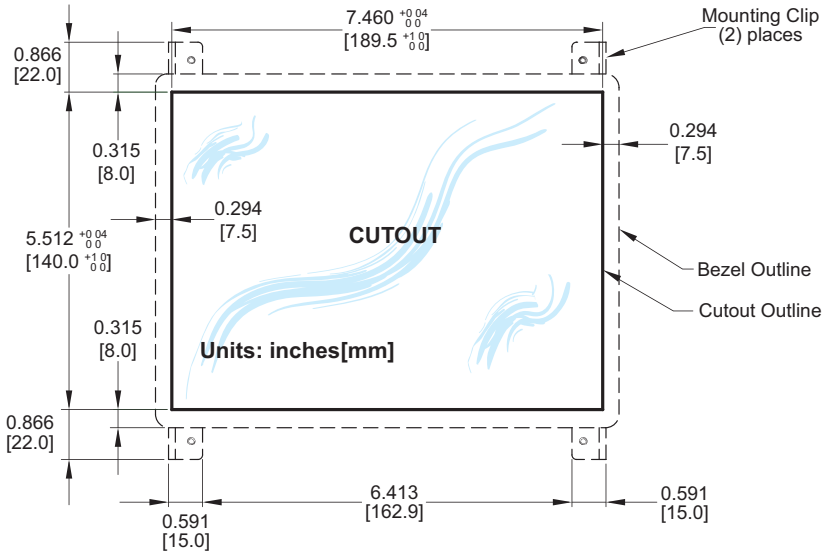

C

EA7-T8C
Original Mounting Clips

Dimensions:

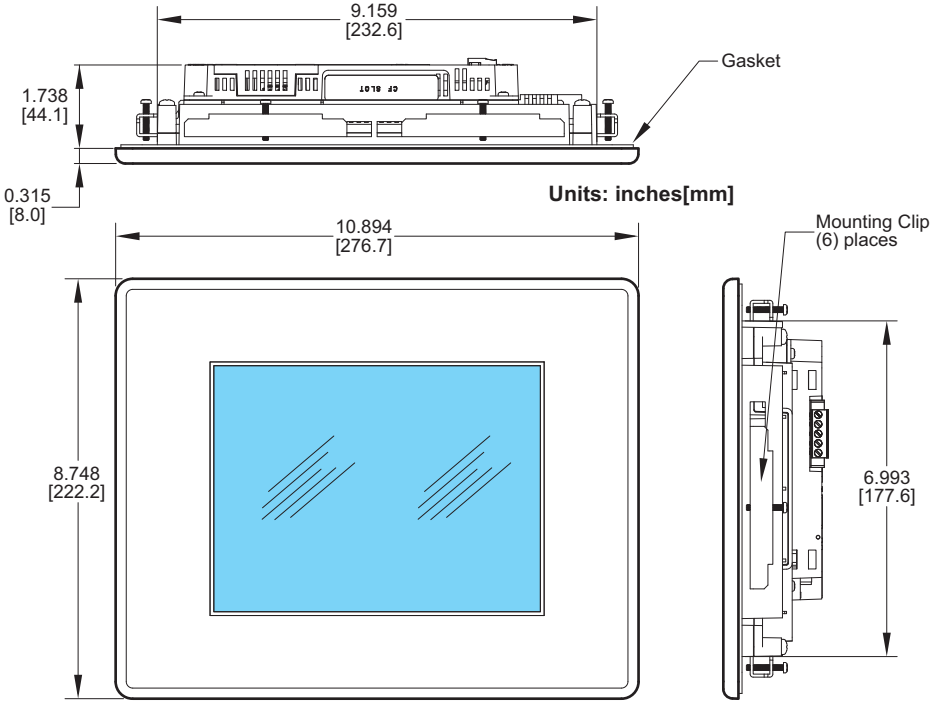

Enclosure Mounting Thickness Ranges and Mounting Clip Screw Torque

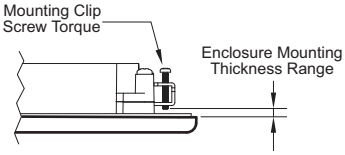

Touch Panel Size	Enclosure Thickness Range	Mounting Clip Screw Torque
8”, 10”, 12” & 15”	0.039 - 0.20 inch [1 – 5 mm]	42 ~ 57 oz-in [0.3 ~ 0.4 Nm]

EA7-T8C
Original Mounting Clips

C

Cutout Dimensions:

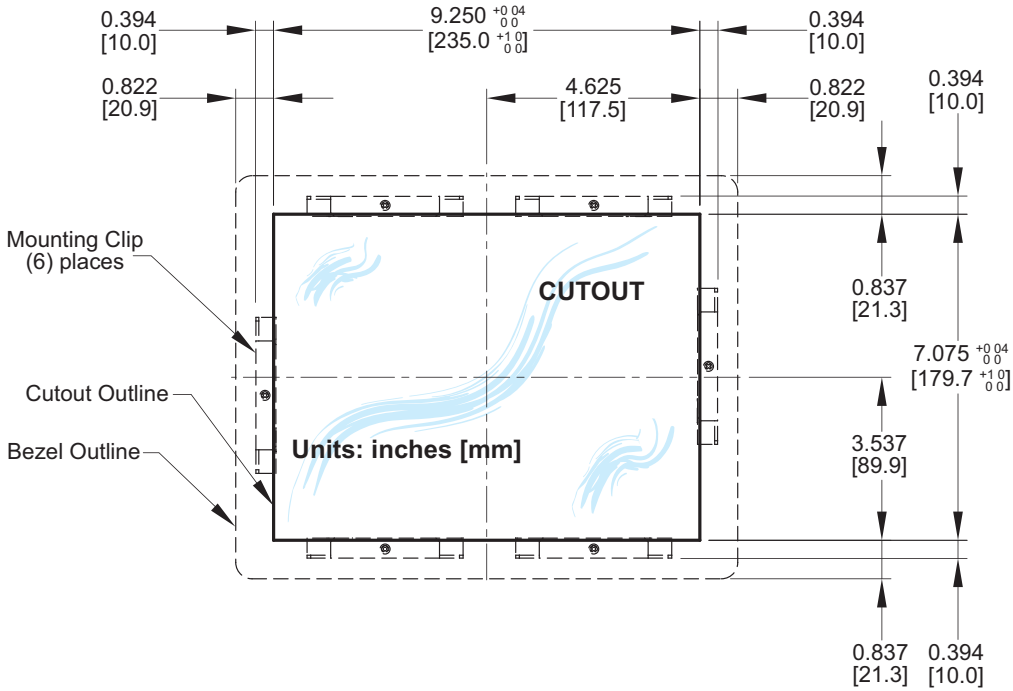

C

EA7-T10C
Original Mounting Clips

Dimensions:

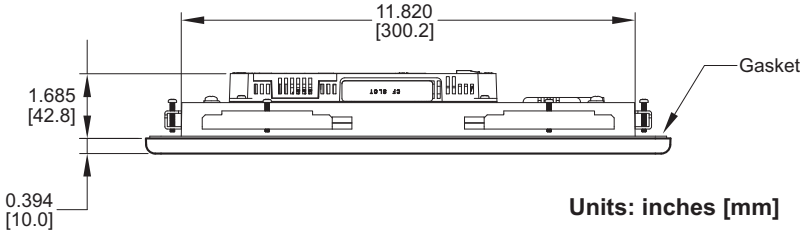

Units: inches [mm]

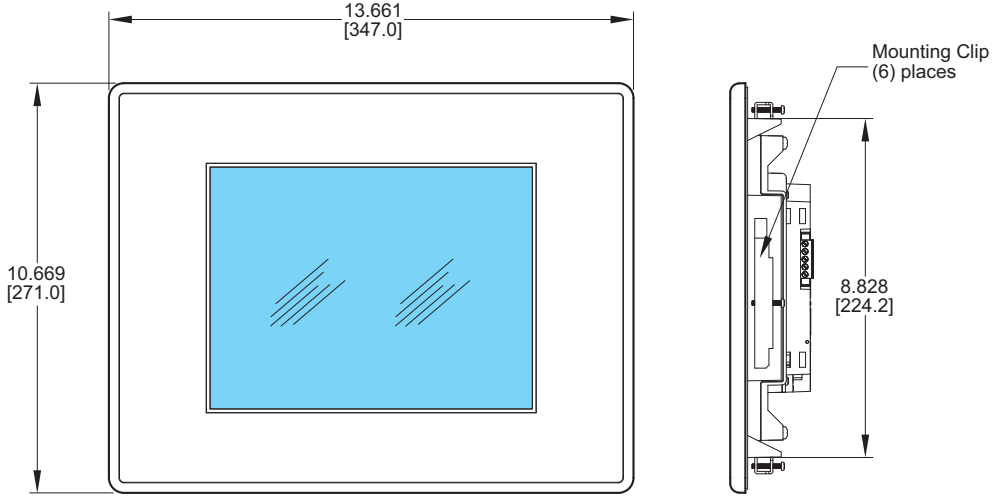

Enclosure Mounting Thickness Ranges and Mounting Clip Screw Torque

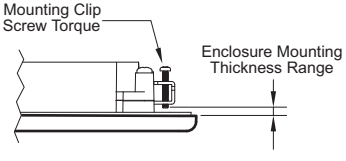

Touch Panel Size	Enclosure Thickness Range	Mounting Clip Screw Torque
8”, 10”, 12” & 15”	0.039 - 0.20 inch [1 – 5 mm]	42 ~ 57 oz-in [0.3 ~ 0.4 Nm]

C

EA7-T10C
Original Mounting Clips

Cutout Dimensions:

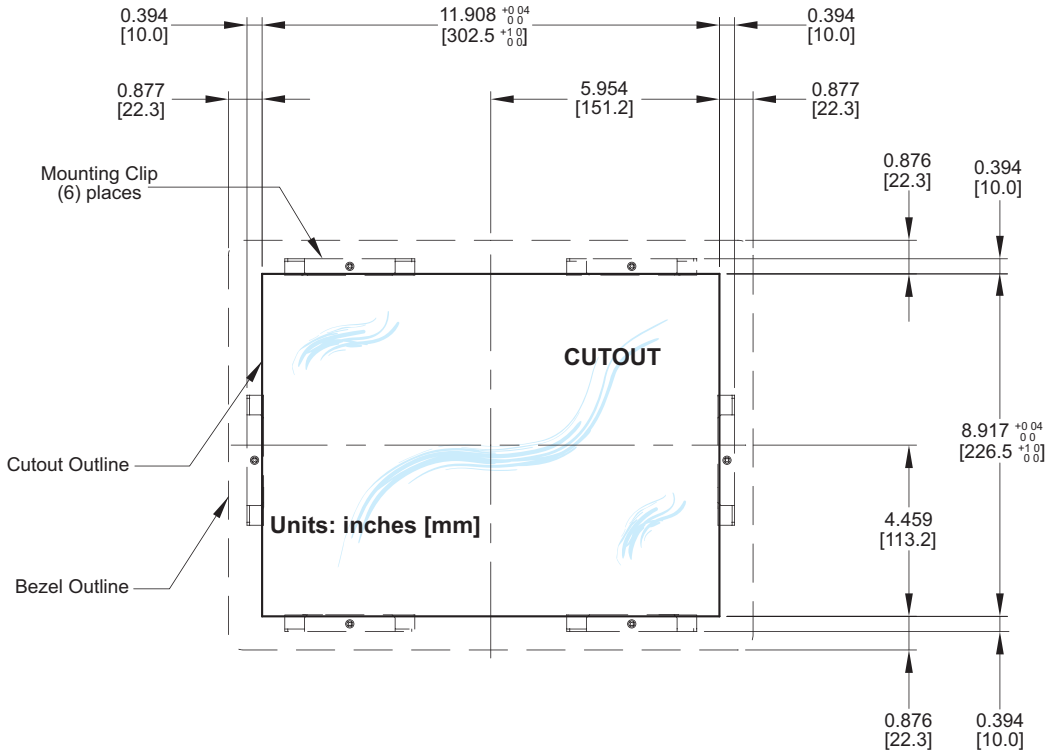

C

EA7-T12C
Original Mounting Clips

Dimensions:

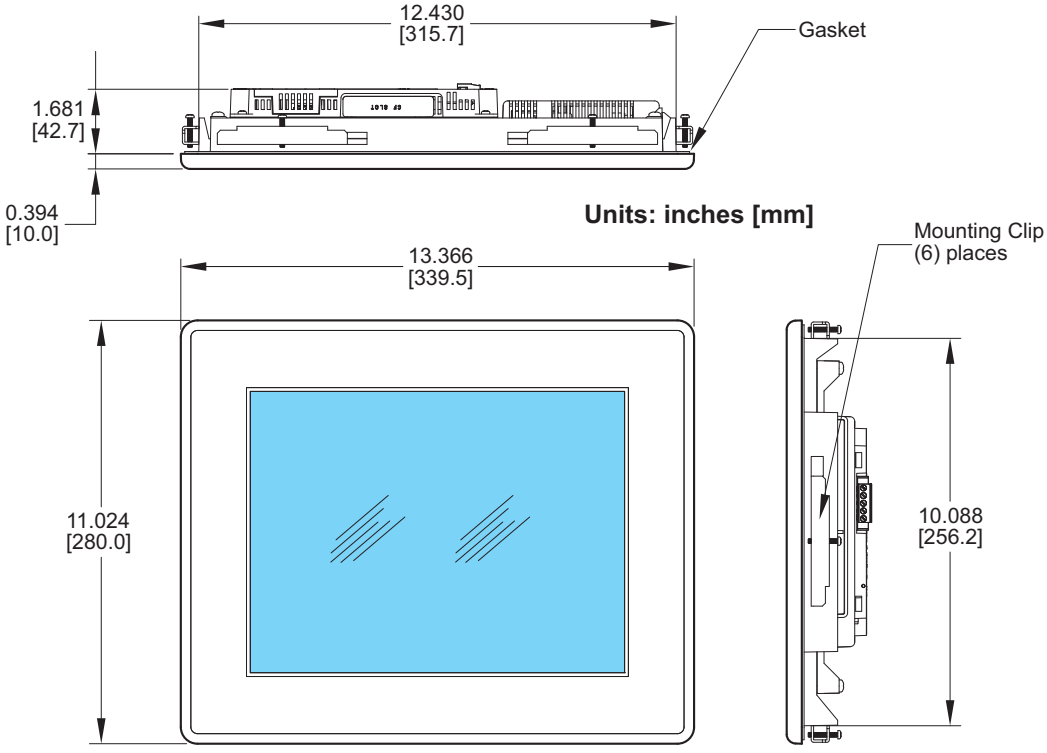

Enclosure Mounting Thickness Ranges and Mounting Clip Screw Torque

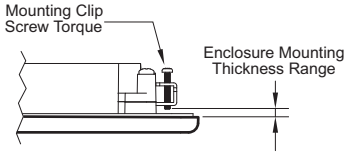

Touch Panel Size	Enclosure Thickness Range	Mounting Clip Screw Torque
8”, 10”, 12” & 15”	0.039 - 0.20 inch [1 – 5 mm]	42 ~ 57 oz-in [0.3 ~ 0.4 Nm]

C

EA7-T12C
Original Mounting Clips

Cutout Dimensions:

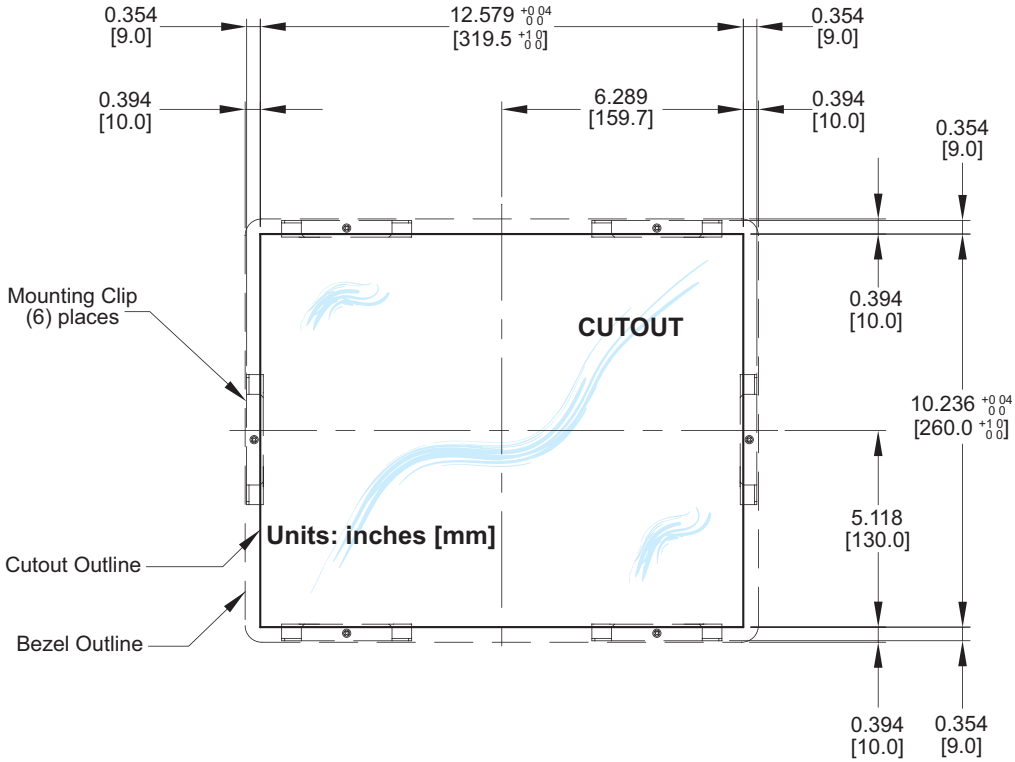

C

EA7-T15C
Original Mounting Clips

Dimensions:

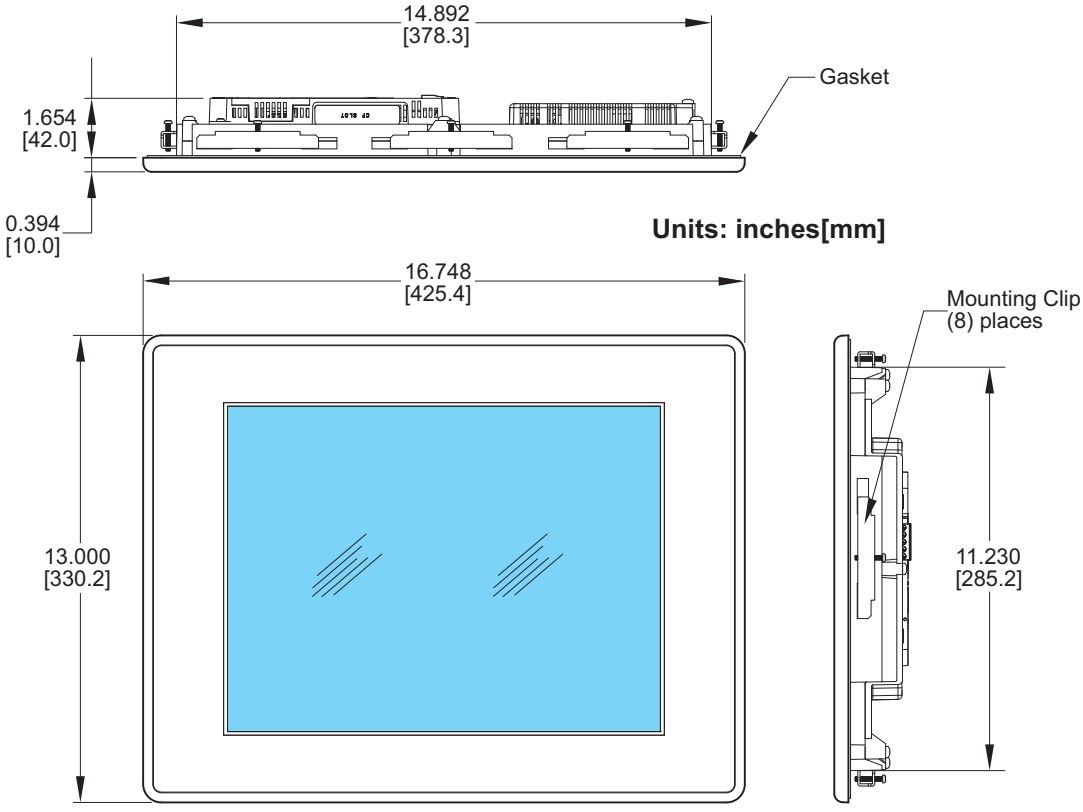

Enclosure Mounting Thickness Ranges and Mounting Clip Screw Torque

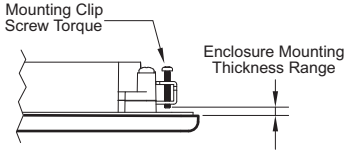

Touch Panel Size	Enclosure Thickness Range	Mounting Clip Screw Torque
8”, 10”, 12” & 15”	0.039 - 0.20 inch [1 – 5 mm]	42 ~ 57 oz-in [0.3 ~ 0.4 Nm]

EA7-T15C
Original Mounting Clips

C

Cutout Dimensions:

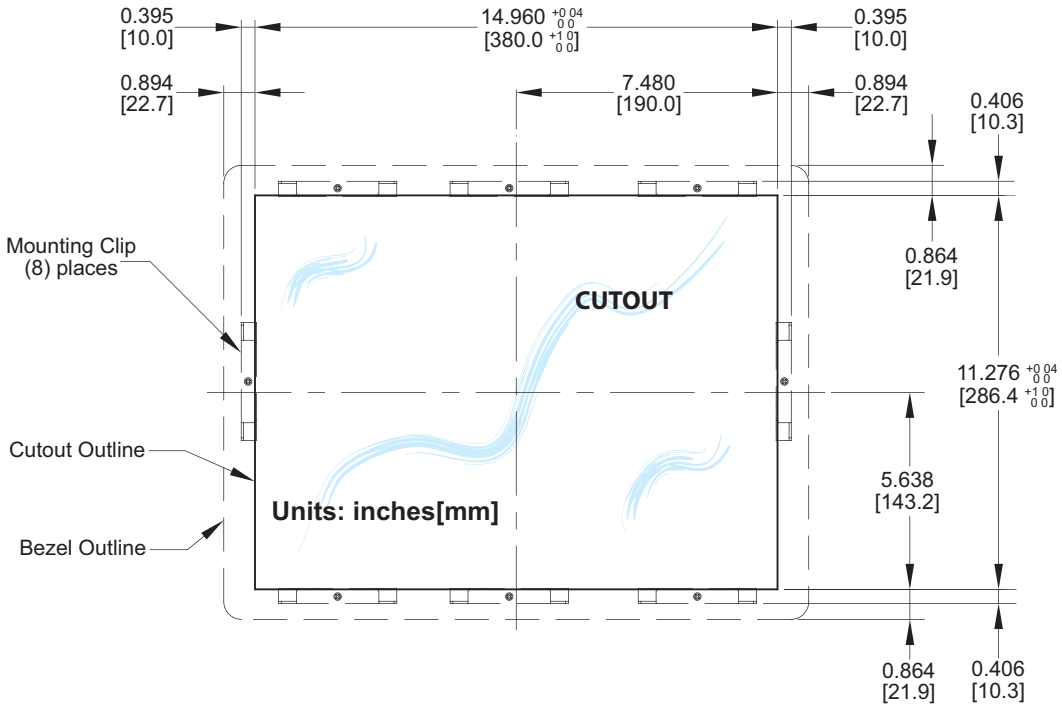

Index

6” Adapter Plate, 4–9
6” Adapter Plate Assembly, 3–18
6” Adapter Plate Cutout Dimensions, 3–17, 4–10
6” Adapter Plate Dimensions, 3–17, 4–10
6” Adapter Plate Installation, 3–18

A

AC Wiring Diagram, 4–14
AC/DC power adapter, 1–4
AC/DC Power Adapter, 3–5
AC/DC Power Adapter Dimensions, 3–7
AC/DC Power Adapter Installation, 3–8
AC/DC Power Adapter Specifications, 3–6
AC/DC Power Adapter Wiring, 3–5
Accessories, 3–2
Accessories at a glance, 3–4
Accessories Overview, 3–3
Adapter Plate, 3–17
Agency Approvals, 4–12
Analog touch screen, 1–4
Available Models, 2–2

C

C-more Touch Panel Error Code Table, A–3
CF Card Interface Module, 3–12
CF Card Interface Module Installation, 3–13
Chemical Compatibility, 2–25
Comm Port Adapter, 3–19

Communications Ports, 2–19
Ethernet Port, 2–19
PLC Port, 2–20
Sound Interface (Audio Line Out), 2–20
USB Port A, 2–20
USB Port B, 2–20
CompactFlash Memory, 3–14
CompactFlash Memory Card Installation, 3–15
Conventions Used, 1–3
Cutout Dimensions, 4–4
EA7-S6M-R, S6C-R, T6CL-R, S6M, S6C, T6C and T6CL, 4–4
EA7-T10C, 4–6
EA7-T12C, 4–7
EA7-T15C, 4–8
EA7-T8C, 4–5
cutout template, 4–3

D

Data Logging - Memory Device Full, 2–24
Data Logging Function and Logging Media, 2–24
Date Code, 1–5
DC Wiring Diagram, 4–13
Dimensions, 2–8
EA7-S6M-R, S6C-R, T6CL-R, S6M, S6C, T6C and T6CL, 2–8
EA7-T10C, 2–12
EA7-T12C, 2–14
EA7-T15C, 2–16
EA7-T8C, 2–10
DirectLOGIC PLCs Password Protection, 6–2

E

E-mail client, 1–4
EA-AC, 1–15
Enclosure Mounting Thickness Ranges, 4–4, 4–5, 4–6, 4–7, 4–8
Error Log Code, B–2
Error Message(s), B–2

Event Manager, 1–4
Expansion Assembly, 3–9
Expansion Assembly Details, 3–9
Expansion Assembly Dimensions, 3–9
Expansion Assembly Installation, 3–10
External Memory Devices, 2–23
EZTouch, 4–9
EZTouch Conversion and Mounting, 1–6
EZTouch Touch Panel Cross Reference to C-more, 1–7

F

FTP client/server, 1–4

I

Installation and Wiring, 4–3
    Introduction, 4–3

L

LED Status Indicator, 4–13

M

Maintenance, 7–2
    Adjust Touch Panel, 7–4
    Check Error Log, 7–4
    Check Memory Usage, 7–4
    Check Physical Conditions, 7–3
    Check Project Functionality, 7–6
    Check/Adjust Display Brightness or Contrast, 7–4
    Checks from C-more Programming Software, 7–6
    Cleaning the Display Screen, 7–5
    CPU LED indicator, 7–2
    Operating Environment, 7–2
    Operating Voltage, 7–2
    Power LED (PWR) indicator, 7–2
    Project Backup, 7–2
    Replace Battery Periodically, 7–5

Run Tests under System Setup Screens, 7–3
Status Indicators, 7–2
Test Beeper/Sound, 7–3
Test Comm. Port, 7–3
Test Display, 7–3
Test Touch Panel, 7–3
TxD and RxD LED, 7–2
Marine Use, 4–12
Memory Menu, 5–35
Backup, 5–37
Project Executed from CompactFlash (CF Slot #1), 5–36
Memory Organization, 2–22
Model Specifications, 2–3
Mounting Clearances, 2–18, 4–11
6” Adapter Plate Assembly, 4–9
air flow, 4–11
Mounting Clip Screw Torque, 2–8, 2–10, 2–12, 2–14, 2–16, 4–4, 4–5, 4–6, 4–7, 4–8
mounting clips, 4–3
Mounting Clips, 1–3
New Style, 1–3
Mounting Clips Prior April 2006, C–2
EA7-S6M-R, S6C-R, T6CL-R, S6M, S6C, T6C and T6CL, C–3
EA7-T10C, C–7
EA7-T12C, C–9
EA7-T15C, C–11
EA7-T8C, C–5
Mounting Thickness Ranges, 2–8, 2–10, 2–12, 2–14, 2–16

P

Panel Depth, 3–2, 3–7, 3–9, 3–19
AC/DC Power Adapter Installed, 3–7
Expansion Assembly Installed, 3–9
Panel Error Code P495, A–36
Omron, A–36
Panel Error Code PLC-496, 497 and 498, A–10
Allen-Bradley EtherNet/IP Protocol, A–10

Panel Error Code PLC-499, A–5
Allen-Bradley, A–7
DirectLOGIC, A–5
Modbus Protocols, A–6
AutomationDirect CLICK, A–6
AutomationDirect DirectLOGIC - Modbus (Koyo), A–6
Entivity Modbus RTU, A–6
Modicon Modbus RTU, A–6
Omron, A–31
Siemens, A–38
Part Number Key, 1–5
PLC Communication Cables & Wiring Diagrams, 6–5, 6–6
PLC Compatibility Table, 6–3, 6–4
PLC Error Codes
Allen-Bradley – EtherNet/IP Protocol, A–11
Allen-Bradley DF1 & DH485 Protocols, A–8
DirectLOGIC K-Sequence Protocol, A–5
GE 90-30 SNPX Protocol, A–22
Generic EtherNet IP Protocol, A–20
Mitsubishi FX Protocol, A–31
Modbus Protocols, A–6
AutomationDirect CLICK, A–6
AutomationDirect DirectLOGIC - Modbus (Koyo), A–6
Entivity Modbus RTU, A–6
Modicon Modbus RTU, A–6
Omron CS/CJ FINS Ethernet Protocol, A–37
Omron FINS Protocol, A–33
Omron Host Link Protocol, A–32
Siemens ISO over TCP Protocol, A–40
Siemens PPI Protocol, A–39
PLCs and protocols, 6–2
Allen-Bradley, 6–20
AutomationDirect CLICK and Direct LOGIC PLCs RS-232C Serial, 6–7
Direct LOGIC PLCs RS-422A/RS-485A, 6–10
Direct LOGIC Universal Converter, p/n F2-UNICON, 6–15
Direct LOGIC Universal Isolated Network Adapter, p/n FA-ISOCON, 6–14
GE, 6–24

GE VersaMax Micro, 6–24
Mitsubishi, 6–25
Modicon Micro Series, 6–27
Modicon ModBus RS-232, 6–27
Modicon ModBus with RJ45, 6–27
Omron, 6–26
Siemens, 6–28
Ports & Memory Expansion, 2–9, 2–11, 2–13, 2–15, 2–17
Power Fault, 4–14
Power Loss Detection and Power Retention Period, 2–24
Product Overview, 1–4
Products with CE marks, 4–2
Providing Power to the Touch Panel, 4–13

Q

Quick Start Steps, 1–9
Step 1 – Unpack and Inspect, 1–9
Step 10 – Install the Programming Software and Develop a Project, 1–13
Step 2 – Assemble Temporary Support Stand, 1–10
Step 3 – Install Optional Hardware Accessories, 1–11
Step 4 – Become Familiar with Available Communication Ports, 1–12
Step 5 – Connect Touch Panel to Computer, 1–14
Step 6 – Provide Power to the Touch Panel, 1–15
Step 7 – Access the Touch Panel Setup Screens, 1–16
Step 8 – Choose Touch Panel to PLC Protocol & Cables, 1–17
Step 9 – Connect Touch Panel to PLC, 1–20

R

Replacement Parts, 9–1
6-15” Panel Gasket Replacements – EA-xx-GSK, 9–11
Installation Instructions, 9–11
6” Adapter Plate Gasket Replacement – EA-6-ADPTR-GSK, 9–14
Gasket Replacement Instructions, 9–14
6” Panel Mounting Clip Replacements – EA-BRK-1, 9–5
Installation Instructions, 9–5
8-15” Panel Backlight Bulb Replacements – EA-xx-BULB, 9–8
Installation Instructions Example, 9–8

8-15” Panel Bezel Replacement – EA-xx-BEZEL, 9–12
Replacement Instructions Example, 9–12
8–15” Panel Mounting Clip Replacements– EA-BRK-2, 9–6
Installation Instructions, 9–6
AC Power Adapter Connector Replacement– EA-AC-CON, 9–7
Battery Replacement – D2-BAT-1, 9–3
Battery Replacement Instructions, 9–3
DC Panel Power Connector Replacement – EA-DC-CON, 9–7
Replacement Parts at a Glance, 9–2
Replacement Parts Overview, 9–2
RS-422A/RS-485A Multi-Drop Wiring Diagram Examples, 6–16
Runtime Errors, B–3
Introduction, B–2

S

Safety Guidelines, 4–2
Screen Covers, 3–22
Non-glare, 3–22
Serial Number, 1–5
Setting Menu, 5–19
Adjust Clock, 5–20
Adjust Display, 5–21
Beeper, 5–23
IP Address Setting, 5–24
Specification, 2–4
12” and 15” Full Feature Models, 2–7
6” Base Feature Models, 2–4
6” Full Feature Models, 2–5
8” and 10” Full Feature Models, 2–6
Supplemental Manuals, 1–2
SYS ERR ERRORCODE, B–2
System Setup Screens, 5–1
Error tab, 5–18
Flowchart, 5–13
General tab, 5–15
Information, 5–15, 5–16, 5–17, 5–18
Main Menu, 5–14

Memory tab, 5–16
Ports tab, 5–17

T

Tag Code Error Value, B–2
Technical Support, 1–2
Terminal Block Adapter, 3–20
Test Menu, 5–25
PLC Enquiry Test: Ethernet Connection, 5–32
PLC Enquiry Test: Serial Connection, 5–30
Serial Port Test, 5–29
Test Beep/Sound, 5–33
Test Communication Ports: Ethernet, 5–31
Test Communication Ports: Serial, 5–28
Test Display, 5–27
Test Touch Panel, 5–26
Troubleshooting
Data not Logging Problems, 8–20
Difficulty Connecting to the Panel over the Internet, 8–17
Internet Access, 8–17
Remote Access, 8–17
Display is Blank, 8–5
Display is Dim, 8–6
Electrical Noise Problems, 8–21
IP Address in System Setup Screens displays 0.0.0.0, 8–16
Loss of Date/Time and Retentive Data, 8–21
No Communications between Panel and PC, 8–8
No Communications between Panel and PLC, 8–13
No User Program, 8–7
Panel Constantly Displays “Initializing” when Powering up, 8–20
PLC Protocol Error Codes, 8–18
Toubleshooting Flow Chart, 8–3
Touch Panel does not Power up, 8–4
Touch Panel Runtime Errors, 8–19

U

USB Pen Drive, 3–24
USB Programming Cable, 1–14

W

WARNING, 3–4
WAV File Specifications, 2–21
Web server, 1–4
Wiring Guidelines, 4–12

Automation Direct®

APPENDIX F

Electrical Diagrams

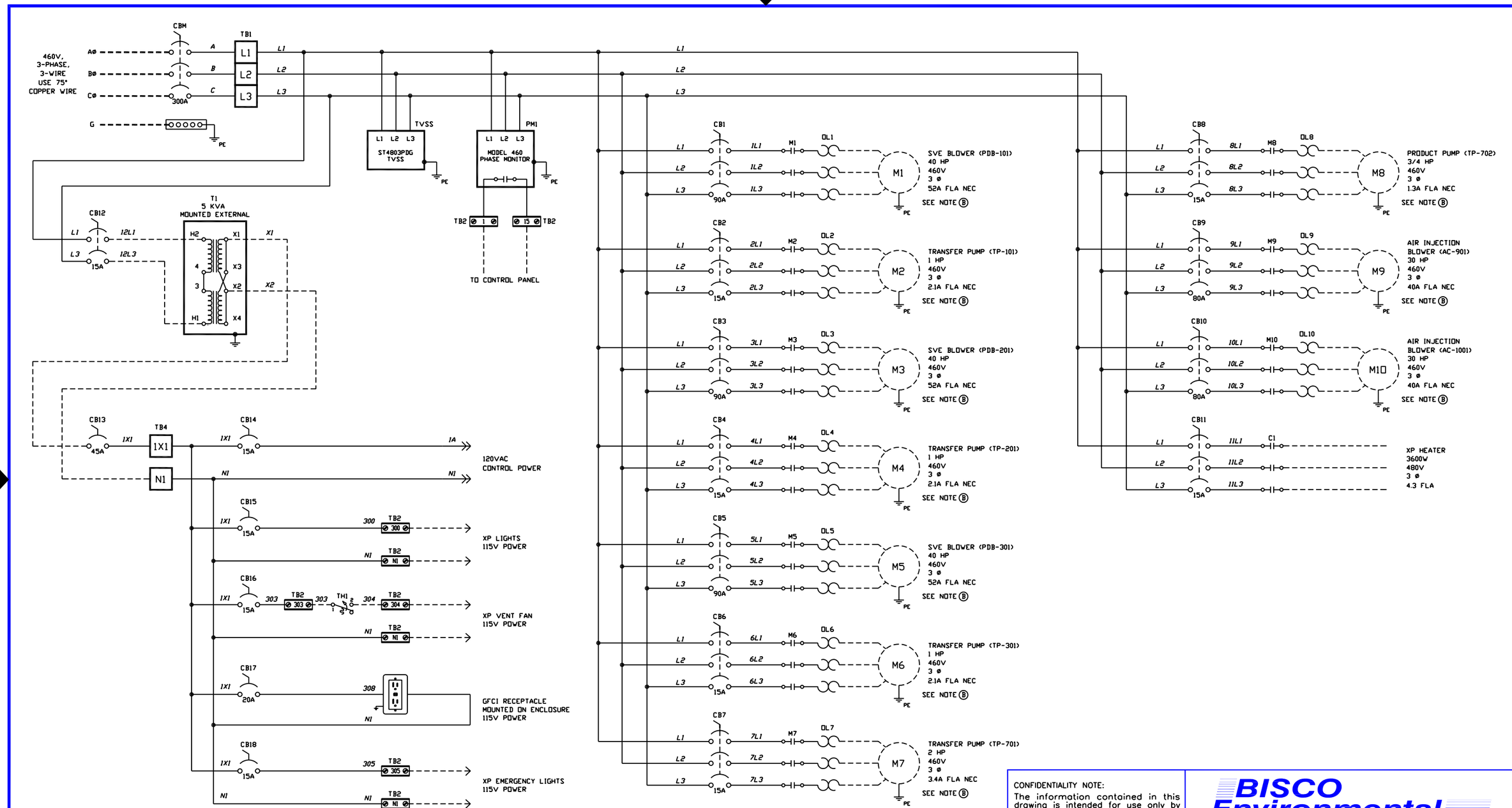

NOTE (A): REMOVE JUMPER AND CONNECT MOTOR THERMISTER IF PRESENT.

NOTE (B): BASED ON NFPA 70: NEC 2011 SET OVERLOAD RELAYS ACCORDING TO ACTUAL FLA AT INSTALLATION.

NOTE (C): UL LISTED 508A & 698A, TYPE 3R, INDUSTRIAL CONTROL PANELS.

NOTE (D): ———— WIRING BY BISCO WITHIN THIS PANEL.

NOTE (E): - - - - - - WIRING BY BISCO REMOTE TO THIS PANEL.

NOTE (F): ▬ ▬ ▬ ▬ ▬ REMOTE / FIELD WIRING BY OTHERS.

REV.	DESCRIPTION	DATE	APPR.
B	AS BUILT	11-28-11	LPC
A	CHANGED TO COMPACT GUARDLOGIX PLC	10-20-11	LPC

REVISIONS

CONFIDENTIALITY NOTE:
The information contained in this drawing is intended for use only by BISCO Environmental and the organization listed below. The information is confidential and any copying, distribution or dissemination without the consent of BISCO Environmental is STRICTLY PROHIBITED.

BISCO Environmental
Soil & Groundwater Remediation Equipment
Taunton, Massachusetts 02780

DRAWN BY LPC	DATE 9-7-11	TITLE CONTROL PANEL	
CHK BY	DATE	XDD, LLC. W.G. KRUMMRICH - SAUGET, IL	JOB NO. 12936
APPR BY	DATE	SCALE N/A / SIZE B / DWG NO. 12936RAS	SHEET 1 OF 10 / REV B

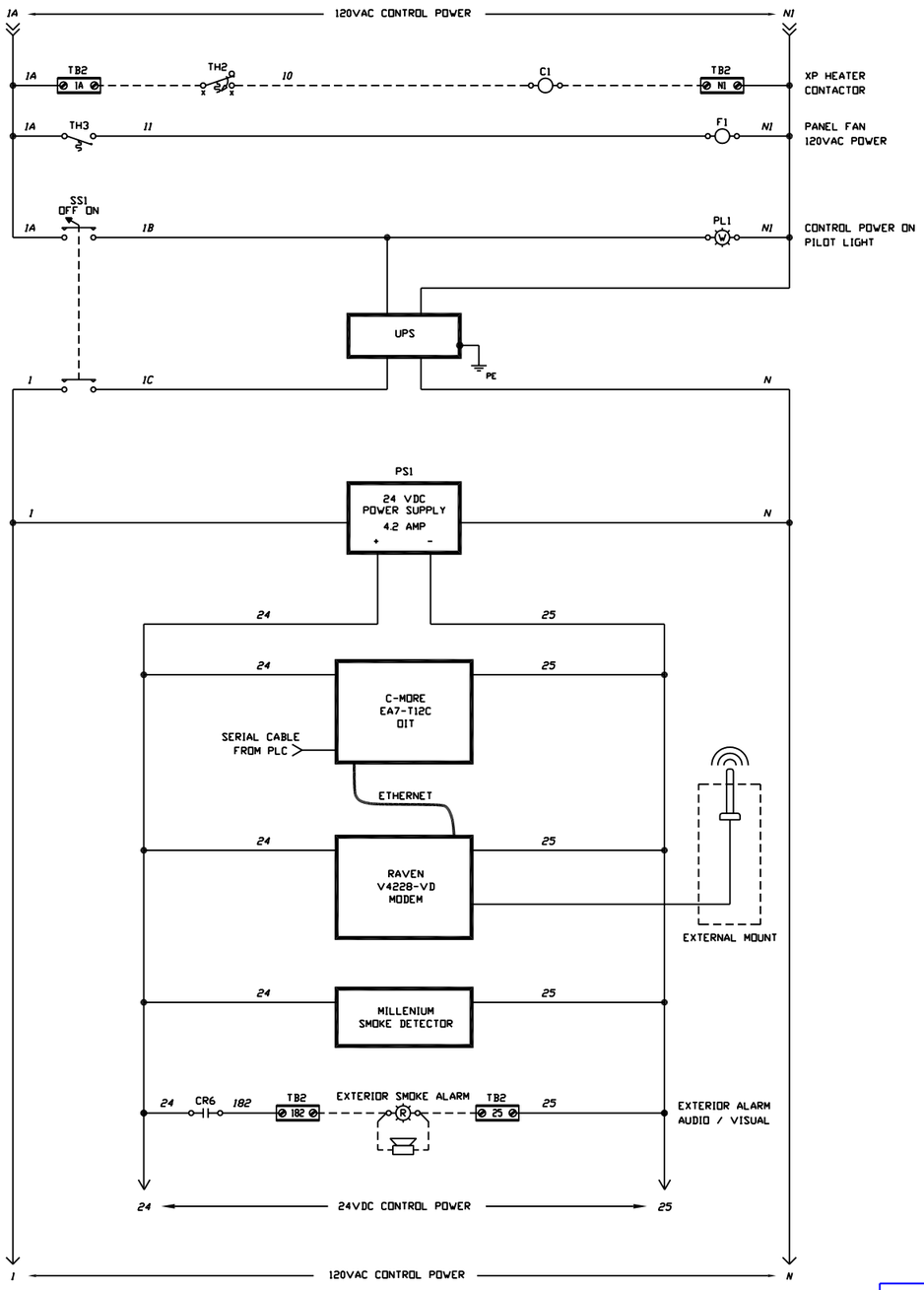

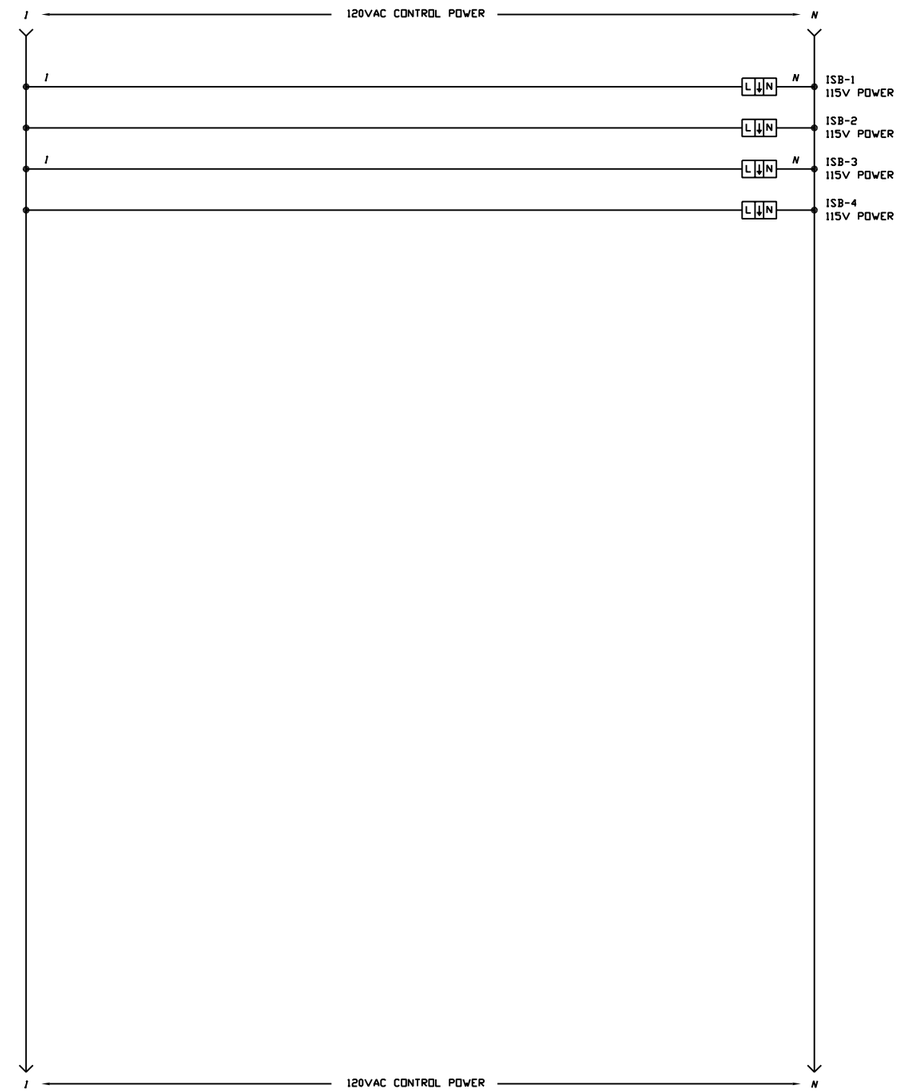

NOTE (A): REMOVE JUMPER AND CONNECT MOTOR THERMISTER IF PRESENT.

NOTE (B): BASED ON NFPA 70: NEC 2011 SET OVERLOAD RELAYS ACCORDING TO ACTUAL FLA AT INSTALLATION.

NOTE (C): UL LISTED 508A & 698A, TYPE 3R, INDUSTRIAL CONTROL PANELS.

NOTE (D): ———— WIRING BY BISCO WITHIN THIS PANEL.

NOTE (E): - - - - - - WIRING BY BISCO REMOTE TO THIS PANEL.

NOTE (F): ▬ ▬ ▬ ▬ ▬ ▬ REMOTE / FIELD WIRING BY OTHERS.

REV.	DESCRIPTION	DATE	APPR.
B	AS BUILT	11-28-11	LPC
A	CHANGED TO COMPACT GUARDLOGIX PLC	10-20-11	LPC

REVISIONS

CONFIDENTIALITY NOTE:
The information contained in this drawing is intended for use only by BISCO Environmental and the organization listed below. The information is confidential and any copying, distribution or dissemination without the consent of BISCO Environmental is STRICTLY PROHIBITED.

DRAWN BY LPC DATE 9-7-11

CHK BY DATE

APPR BY DATE

BISCO Environmental
Soil & Groundwater Remediation Equipment
Taunton, Massachusetts 02780

TITLE: CONTROL PANEL

XDD, LLC.
W.G. KRUMMRICH - SAUGET, IL

JOB NO. 12936

SCALE	SIZE	DWG NO.	SHEET	REV
N/A	B	12936RAS	2 OF 10	B

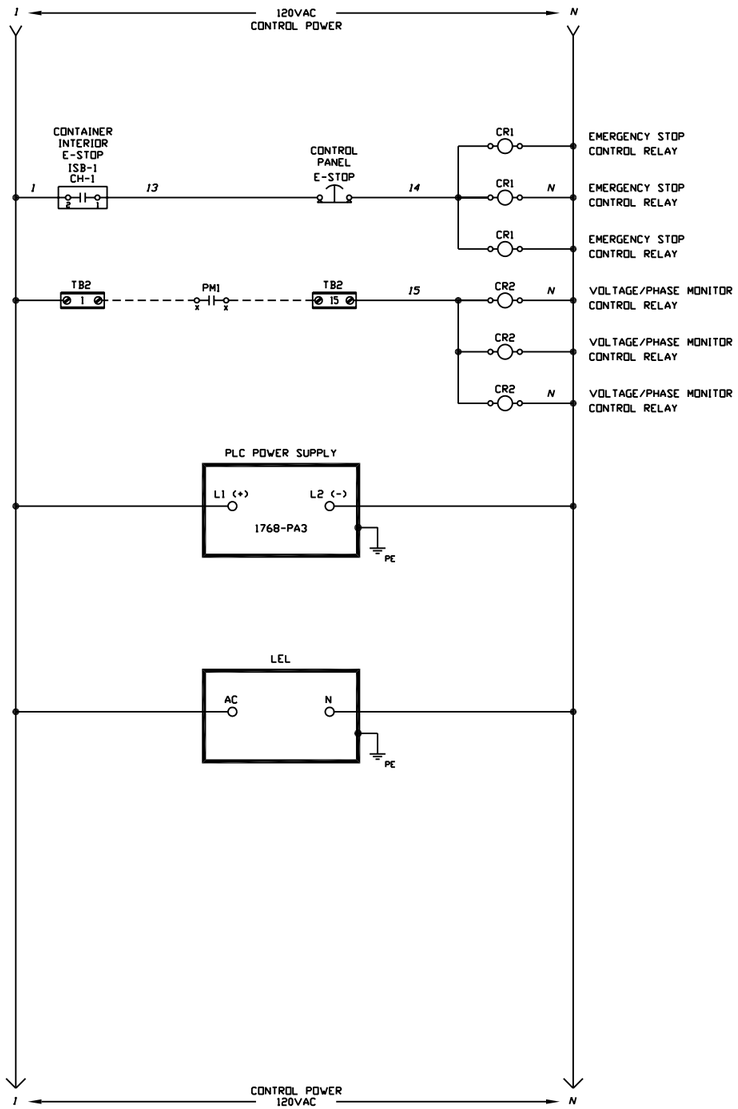

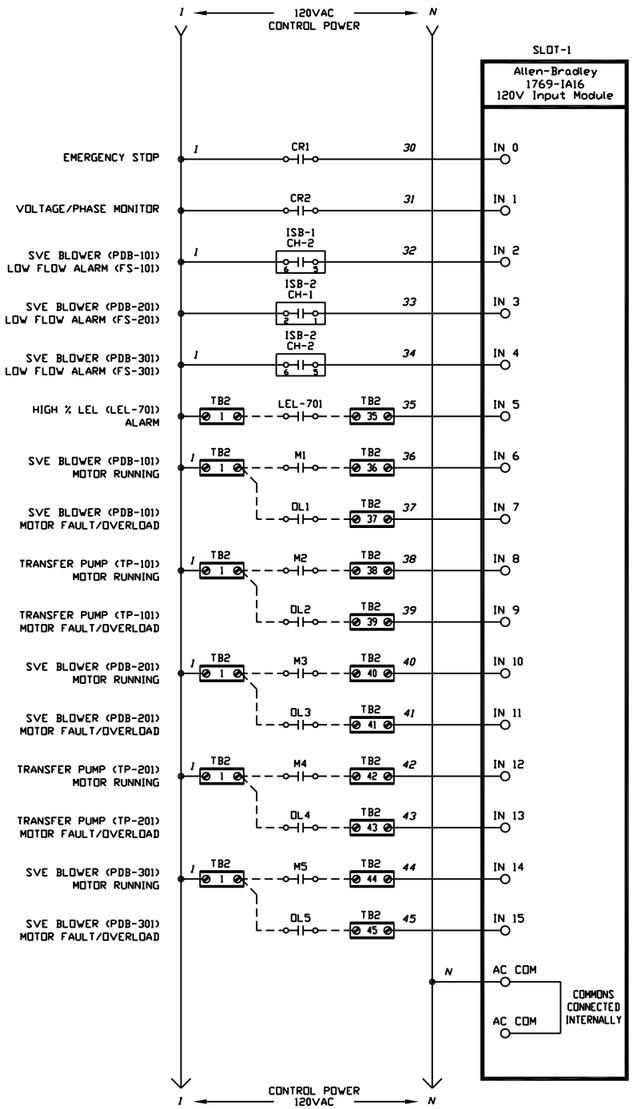

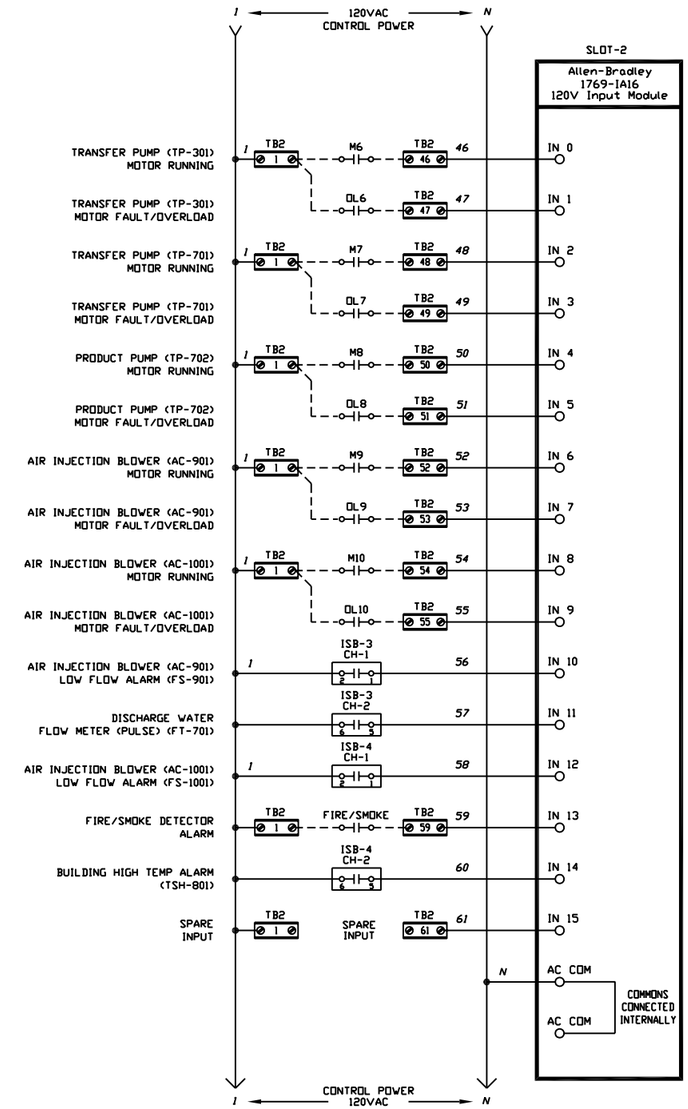

NOTE (A): REMOVE JUMPER AND CONNECT MOTOR THERMISTER IF PRESENT.

NOTE (B): BASED ON NFPA 70: NEC 2011 SET OVERLOAD RELAYS ACCORDING TO ACTUAL FLA AT INSTALLATION.

NOTE (C): UL LISTED 508A & 698A, TYPE 3R, INDUSTRIAL CONTROL PANELS.

NOTE (D): ———— WIRING BY BISCO WITHIN THIS PANEL.

NOTE (E): - - - - - - WIRING BY BISCO REMOTE TO THIS PANEL.

NOTE (F): ▬ ▬ ▬ ▬ ▬ ▬ REMOTE / FIELD WIRING BY OTHERS.

REV.	DESCRIPTION	DATE	APPR.
B	AS BUILT	11-28-11	LPC
A	CHANGED TO COMPACT GUARDLOGIX PLC	10-20-11	LPC

REVISIONS

CONFIDENTIALITY NOTE:
The information contained in this drawing is intended for use only by BISCO Environmental and the organization listed below. The information is confidential and any copying, distribution or dissemination without the consent of BISCO Environmental is STRICTLY PROHIBITED.

DRAWN BY LPC DATE 9-7-11

CHK BY DATE

APPR BY DATE

BISCO Environmental
Soil & Groundwater Remediation Equipment
Taunton, Massachusetts 02780

TITLE: CONTROL PANEL

XDD, LLC.
W.G. KRUMMRICH - SAUGET, IL

JOB NO. 12936

SCALE	SIZE	DWG NO.	SHEET	REV
N/A	B	12936RAS	3 OF 10	B

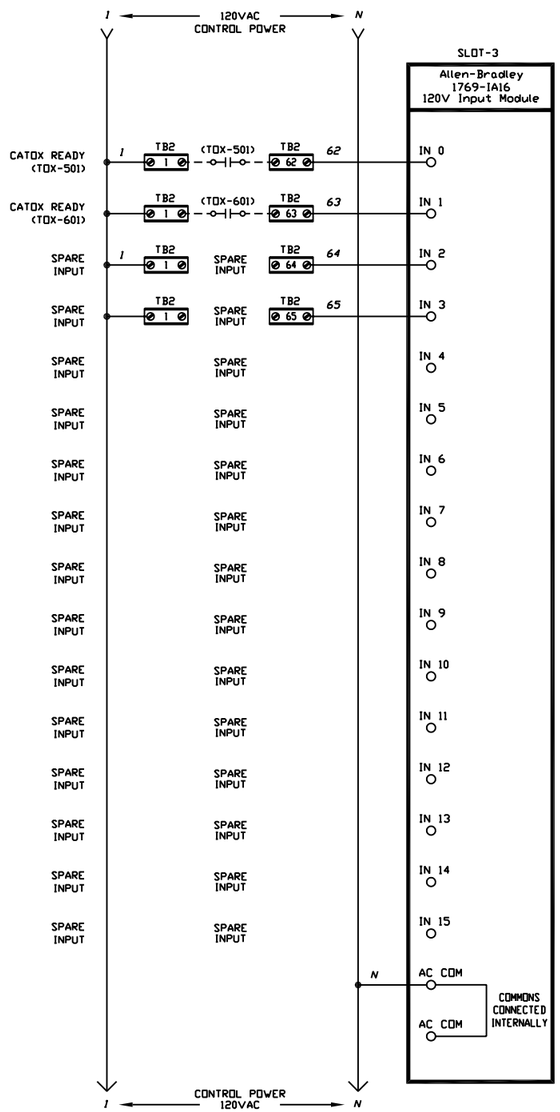

COMPONENT	QTY	TYPE	PART #	DESCRIPTION
Control Enclosure (MCP)	2	Hammond	EN4SD603616GY	NEMA 4 (3R), Single Door, 60"H x 36"W x 16"D
Control Enclosure (MCP)	2	Hammond	EP6036	60"H x 36"W Sub Panel
Control Enclosure (MCP)	2	Hammond	2WSP4836	48"H x 36"W Swing Panel, Inner Door
Control Enclosure (MCP)	2	Hammond	RH20000GY	Type 3R Rain Hoods
Filter Fan	1	Phannenberg	116 2215 4055	PF 22000 IP55 Filter Fan
Exhaust Filter	1	Phannenberg	117 2000 4055	PFA 20000 IP55 Exhaust Filter
Thermostat (TH3)	1	Phannenberg	17121000010	FLZ 530 32-140 F Thermostat
Circuit Breaker (CBM)	1	Cutler Hammer	KD3300	MCBK, 300A, 460V, 3 Pole
Circuit Breaker (CBM)	1	Cutler Hammer	HM3R16	Disconnect Handle Kit for CBM
Terminal Block (TB1)	1	Ferraz Shawmut	69083	380A Distribution Block, 3 Pole
Terminal Block (TB1)	3	Ferraz Shawmut	08590	Distribution Block Cover Plate per Pole
Terminal Block (TB4)	1	Ferraz Shawmut	67562	175A Distribution Block, 2 Pole
Terminal Block (TB4)	2	Ferraz Shawmut	08570	Distribution Block Cover Plate per Pole
Ground Bar	1	Sq D Co	PK23GTA	Ground Bar, 23 Points
Ground Bar	1	Sq D Co	PK15GTA	Ground Bar, 15 Points
Ground Bar	1	Sq D Co	LK100AN	Ground Bar, Line Lug
TVSS	1	Ferraz	ST480SPDG	480VAC TVSS 4 Wire Unit
Phase Monitor (PM1)	1	Symcom	Motorsaver 460	Phase/Voltage Monitor w/Auto Restart
Transformer (T1)	1	Hammond	C1F005LES	5kva 460V X 115V Transformer
Circuit Breaker (CB1,3,5)	3	ABB	T1N090TL	90A, 460V, 3 Pole
Circuit Breaker (CB9 & 10)	2	ABB	T1N080TL	80A, 460V, 3 Pole
Circuit Breaker (CB2,4,6,7,8,11)	6	ABB	S203UP-K15	15A, 460V, 3 Pole
Circuit Breaker (CB12)	1	ABB	S202UP-K15	15A, 460V, 2 Pole
Circuit Breaker (CB13)	1	Allen Bradley	1492-MCAA145	45A, 115V, 1 Pole
Circuit Breaker (CB14,15,16,18)	4	Allen Bradley	1492-MCAA115	15A, 115V, 1 Pole
Circuit Breaker (CB17)	1	Allen Bradley	1492-MCAA120	20A, 115V, 1 Pole
UPS	1	Sola Hevi-Duty	SDU500	UPS 500 VA
24VDC Power Supply (PS1)	1	ABB	1SVR427045R0400	24VDC, 4.2A Power Supply
Contactor (M1, M3, M5)	3	Allen Bradley	100-C60D10	Contactor for 40HP at 460V, 3-Phase
OL Block (M1, M3, M5)	3	Allen Bradley	193-EEGE	18A - 90A OL Block
Contactor (M9, M10)	2	Allen Bradley	100-C43D10	Contactor for 30HP at 460V, 3-Phase
OL Block (M9, M10)	2	Allen Bradley	193-EEFD	9A - 45A OL Block
Contactor (M2,4,6,7,M8)	5	Allen Bradley	100-C09D10	Contactor for 5HP at 460V, 3-Phase
OL Block (M2,4,6,7,M8)	5	Allen Bradley	193-ED1CB	1.0A - 5.0A OL Block
Heater Contactor (C1)	1	Square D	8910DPA23V02	3 Pole Contactor, 25/35A
Selector Switch (SS1)	1	Allen Bradley	800FM-SM22	Selector Switch 2-Position, Maintained
Switch Contact (SS1)	2	Allen Bradley	800F-X10	Normally Open Contact
Pilot Light (PL1)	1	Allen Bradley	800FP-P7	Pilot Light, LED, White
Pilot Light (PL1)	1	Allen Bradley	800F-PN5W	Pilot Light, LED, White
E-Stop Operator	1	Allen Bradley	800FM-MP44	E-Stop Operator, Push/Pull, Maintained
E-Stop Operator	1	Allen Bradley	800F-X01	Normally Closed Contact
Switch & PL Mounting Latch	3	Allen Bradley	800F-ALM	Contacts Mounting Latch
Panel Strobe Light	1	Allen Bradley	855-PS-B10LE422	120V, Strobe Light, 65mm, Red
Control Relay (CR1-6)	10	Idec	RU4S-A110	Control Relay, 120V, 4 Pole
Control Relay (CR1-6)	10	Idec	SY4S-05	Control Relay Socket
Thermostat (TH1-2)	2	Johnson Controls	4E047	60-100 Degree Thermostat
Operator Interface (OIT)	1	C-More	EA7-T12C	Operator Interface Terminal
Operator Interface Cable	1	C-More	SLC-232-CBL	Operator Interface Cable
Programmable Controller	1	Allen Bradley	1768-L43S	PLC CPU, Compact GuardLogix
Programmable Controller	1	Allen Bradley	1768-PA3	PLC Power Supply
Programmable Controller	3	Allen Bradley	1769-IA16	PLC Discrete Input Module
Programmable Controller	1	Allen Bradley	1769-IF16C	PLC Analog Input Module
Programmable Controller	1	Allen Bradley	1769-IF8	PLC Analog Input Module
Programmable Controller	1	Allen Bradley	1769-OW16	PLC Relay Output Module
Programmable Controller	1	Allen Bradley	1769-ECR	PLC End Cap - Right Side
Wireless Modem	1	GetWireless	V4228-VD	AirLink Raven XEVDO V4221
Wireless Modem	1	GetWireless	301104	Wilson 5 Db Gain Dual-Band Antenna
Wireless Modem	1	GetWireless	FME-14	Antenna FME to SMA Modem Adapter
Wireless Modem	1	GetWireless	NMO58U-NC	Maxrad 3/4" NMO Antenna Mount
IS Barrier Relay (ISB-1-4)	4	Allen Bradley	897H-G232	Dual Channel IS Barrier Relay
IS Barrier (ISB-5-21)	17	Allen Bradley	897H-S214	4-20ma IS Barrier

NOTE Ⓐ: REMOVE JUMPER AND CONNECT MOTOR THERMISTER IF PRESENT.

NOTE Ⓑ: BASED ON NFPA 70: NEC 2011 SET OVERLOAD RELAYS ACCORDING TO ACTUAL FLA AT INSTALLATION.

NOTE Ⓒ: UL LISTED 508A & 698A, TYPE 3R, INDUSTRIAL CONTROL PANELS.

NOTE Ⓓ: ———— WIRING BY BISCO WITHIN THIS PANEL.

NOTE Ⓔ: - - - - - - WIRING BY BISCO REMOTE TO THIS PANEL.

NOTE Ⓕ: ▬ ▬ ▬ ▬ ▬ ▬ REMOTE / FIELD WIRING BY OTHERS.

REV.	DESCRIPTION	DATE	APPR.
B	AS BUILT	11-28-11	LPC
A	CHANGED TO COMPACT GUARDLOGIX PLC	10-20-11	LPC

REVISIONS

CONFIDENTIALITY NOTE:
The information contained in this drawing is intended for use only by BISCO Environmental and the organization listed below. The information is confidential and any copying, distribution or dissemination without the consent of BISCO Environmental is STRICTLY PROHIBITED.

DRAWN BY LPC DATE 9-7-11

CHK BY DATE

APPR BY DATE

BISCO Environmental
Soil & Groundwater Remediation Equipment
Taunton, Massachusetts 02780

TITLE CONTROL PANEL

XDD, LLC.
W.G. KRUMMRICH - SAUGET, IL

JOB NO. 12936

SCALE	SIZE	DWG NO.	SHEET	REV
N/A	B	12936RAS	4 OF 10	B

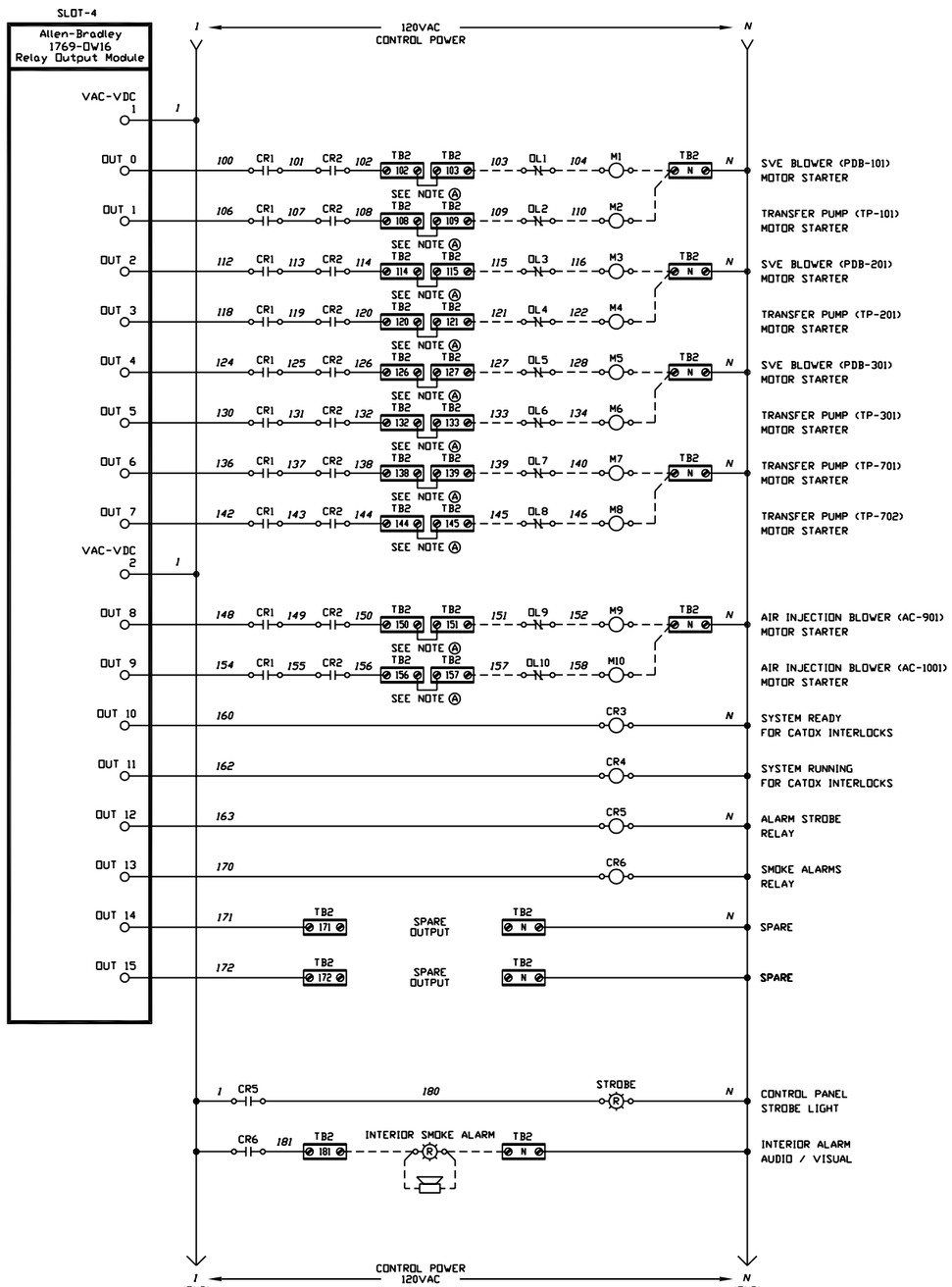

NOTE Ⓐ: REMOVE JUMPER AND CONNECT MOTOR THERMISTER IF PRESENT.

NOTE Ⓑ: BASED ON NFPA 70: NEC 2011 SET OVERLOAD RELAYS ACCORDING TO ACTUAL FLA AT INSTALLATION.

NOTE Ⓒ: UL LISTED 508A & 698A, TYPE 3R, INDUSTRIAL CONTROL PANELS.

NOTE Ⓓ: ———— WIRING BY BISCO WITHIN THIS PANEL.

NOTE Ⓔ: - - - - - - WIRING BY BISCO REMOTE TO THIS PANEL.

NOTE Ⓕ: ▬ ▬ ▬ ▬ ▬ REMOTE / FIELD WIRING BY OTHERS.

REV.	DESCRIPTION	DATE	APPR.
B	AS BUILT	11-28-11	LPC
A	CHANGED TO COMPACT GUARDLOGIX PLC	10-20-11	LPC

REVISIONS

CONFIDENTIALITY NOTE:
The information contained in this drawing is intended for use only by BISCO Environmental and the organization listed below. The information is confidential and any copying, distribution or dissemination without the consent of BISCO Environmental is STRICTLY PROHIBITED.

DRAWN BY LPC DATE 9-7-11

CHK BY DATE

APPR BY DATE

BISCO Environmental

Soil & Groundwater Remediation Equipment
Taunton, Massachusetts 02780

TITLE: CONTROL PANEL

XDD, LLC.
W.G. KRUMMRICH - SAUGET, IL

JOB NO. 12936

SCALE	SIZE	DWG NO.	SHEET	REV
N/A	B	12936RAS	5 OF 10	B

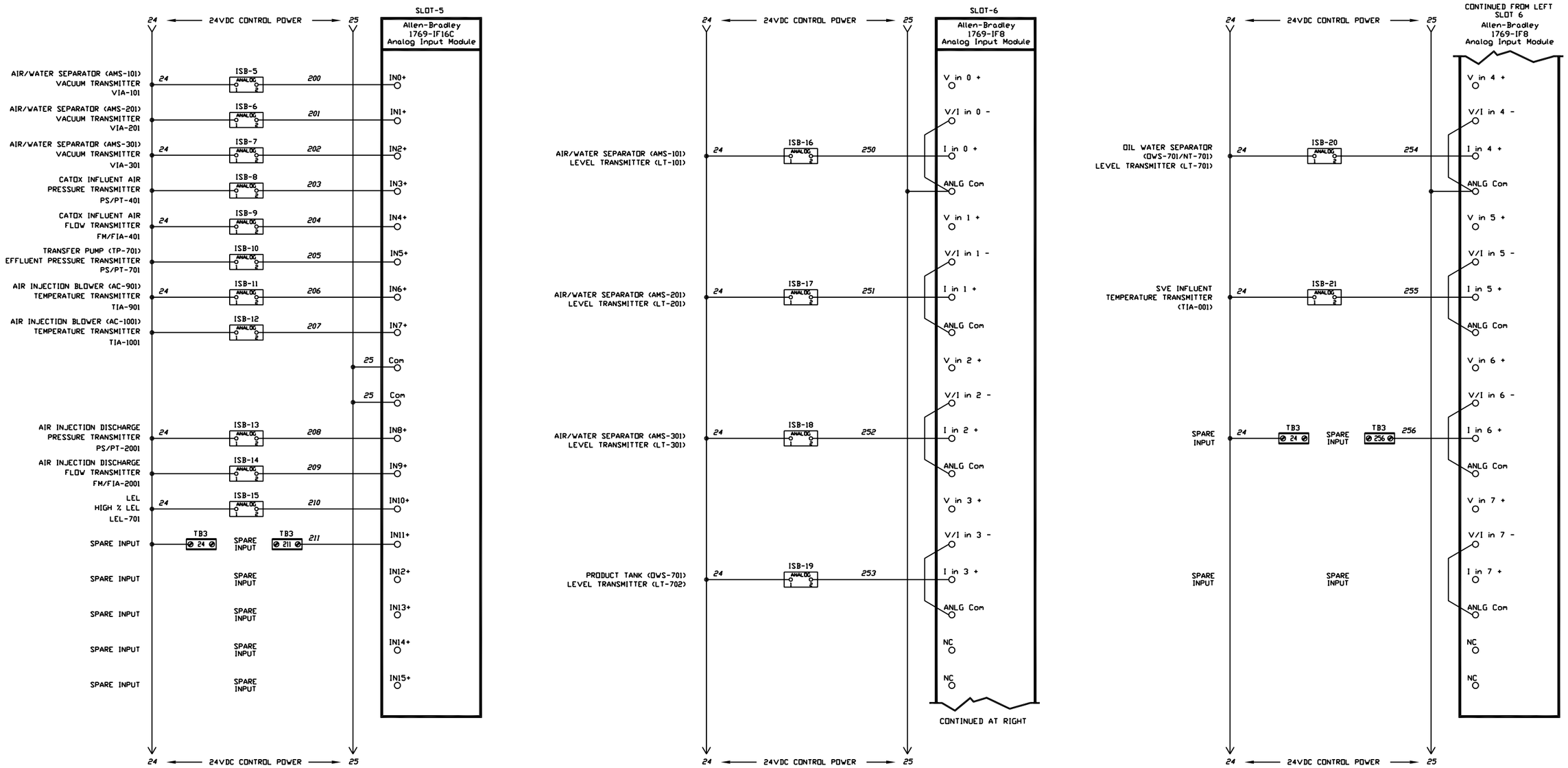

NOTE (A): REMOVE JUMPER AND CONNECT MOTOR THERMISTER IF PRESENT.

NOTE (B): BASED ON NFPA 70: NEC 2011 SET OVERLOAD RELAYS ACCORDING TO ACTUAL FLA AT INSTALLATION.

NOTE (C): UL LISTED 508A & 698A, TYPE 3R, INDUSTRIAL CONTROL PANELS.

NOTE (D): ———— WIRING BY BISCO WITHIN THIS PANEL.

NOTE (E): - - - - - - WIRING BY BISCO REMOTE TO THIS PANEL.

NOTE (F): — — — — — REMOTE / FIELD WIRING BY OTHERS.

REV.	DESCRIPTION	DATE	APPR.
B	AS BUILT	11-28-11	LPC
A	CHANGED TO COMPACT GUARDLOGIX PLC	10-20-11	LPC

REVISIONS

CONFIDENTIALITY NOTE:
The information contained in this drawing is intended for use only by BISCO Environmental and the organization listed below. The information is confidential and any copying, distribution or dissemination without the consent of BISCO Environmental is STRICTLY PROHIBITED.

DRAWN BY LPC DATE 9-7-11

CHK BY DATE

APPR BY DATE

BISCO Environmental

Soil & Groundwater Remediation Equipment
Taunton, Massachusetts 02780

TITLE: CONTROL PANEL

XDD, LLC.
W.G. KRUMMRICH - SAUGET, IL

JOB NO. 12936

SCALE	SIZE	DWG NO.	SHEET	REV
N/A	B	12936RAS	6 OF 10	B

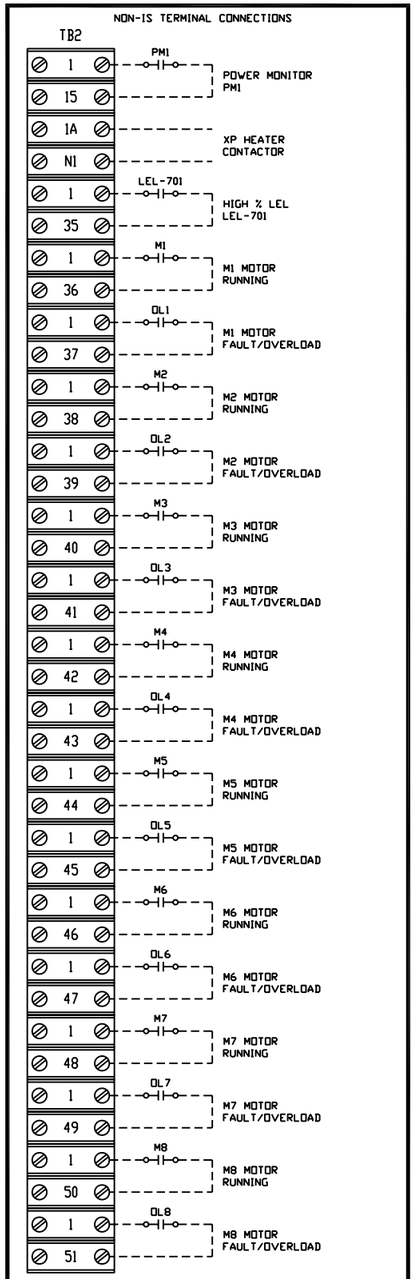

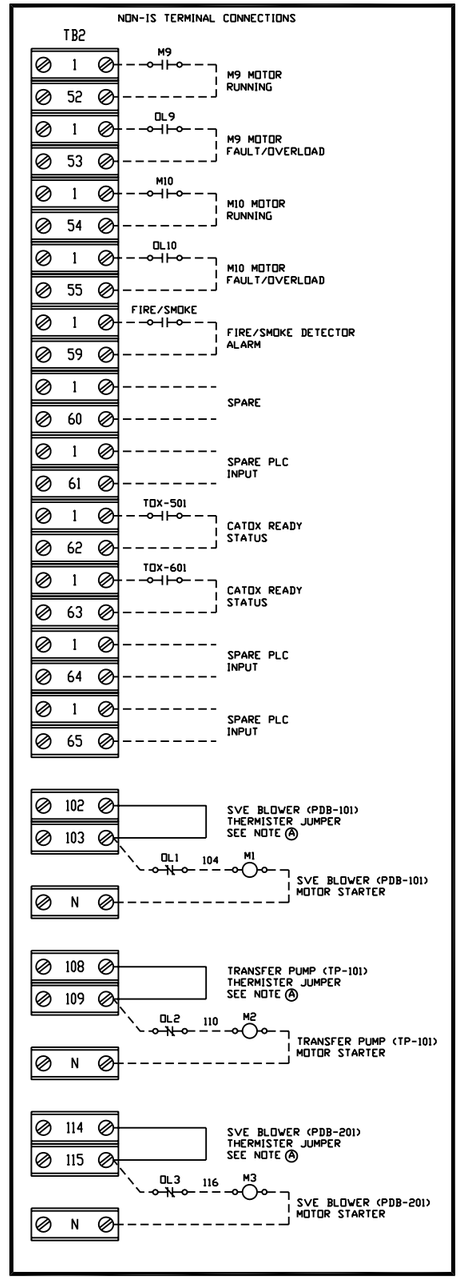

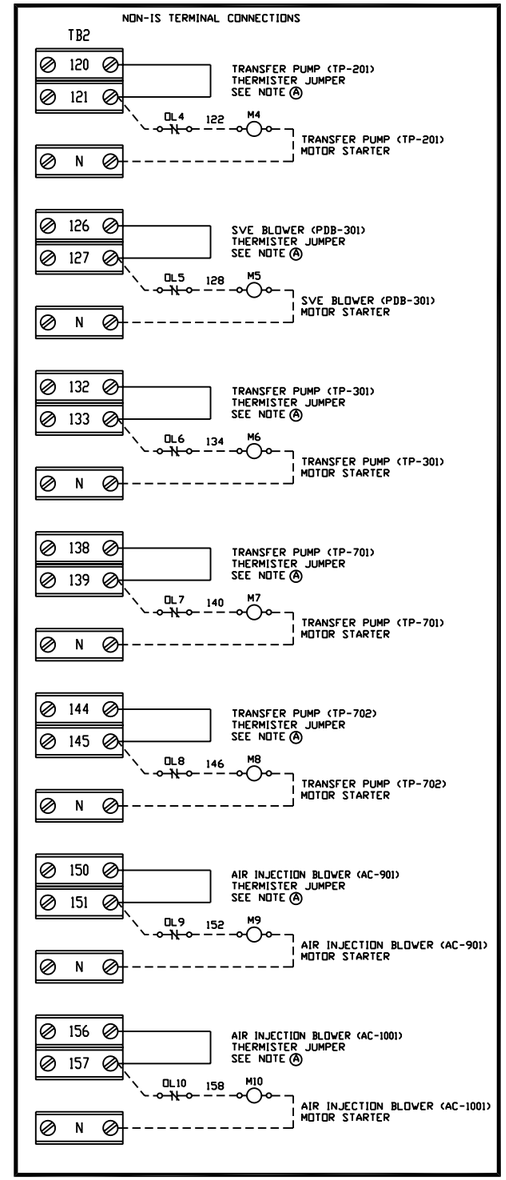

NOTE A: REMOVE JUMPER AND CONNECT MOTOR THERMISTER IF PRESENT.

NOTE B: BASED ON NFPA 70: NEC 2011 SET OVERLOAD RELAYS ACCORDING TO ACTUAL FLA AT INSTALLATION.

NOTE C: UL LISTED 508A & 698A, TYPE 3R, INDUSTRIAL CONTROL PANELS.

NOTE D: ———— WIRING BY BISCO WITHIN THIS PANEL.

NOTE E: - - - - - - WIRING BY BISCO REMOTE TO THIS PANEL.

NOTE F: - - - - - - REMOTE / FIELD WIRING BY OTHERS.

REV.	DESCRIPTION	DATE	APPR.
B	AS BUILT	11-28-11	LPC
A	CHANGED TO COMPACT GUARDLOGIX PLC	10-20-11	LPC

REVISIONS

CONFIDENTIALITY NOTE:
The information contained in this drawing is intended for use only by BISCO Environmental and the organization listed below. The information is confidential and any copying, distribution or dissemination without the consent of BISCO Environmental is STRICTLY PROHIBITED.

BISCO Environmental
Soil & Groundwater Remediation Equipment
Taunton, Massachusetts 02780

DRAWN BY LPC	DATE 9-7-11	TITLE CONTROL PANEL	
CHK BY	DATE	XDD, LLC. W.G. KRUMMRICH - SAUGET, IL	JOB NO. 12936
APPR BY	DATE	SCALE N/A / SIZE B / DWG NO. 12936RAS	SHEET 7 OF 10 / REV B

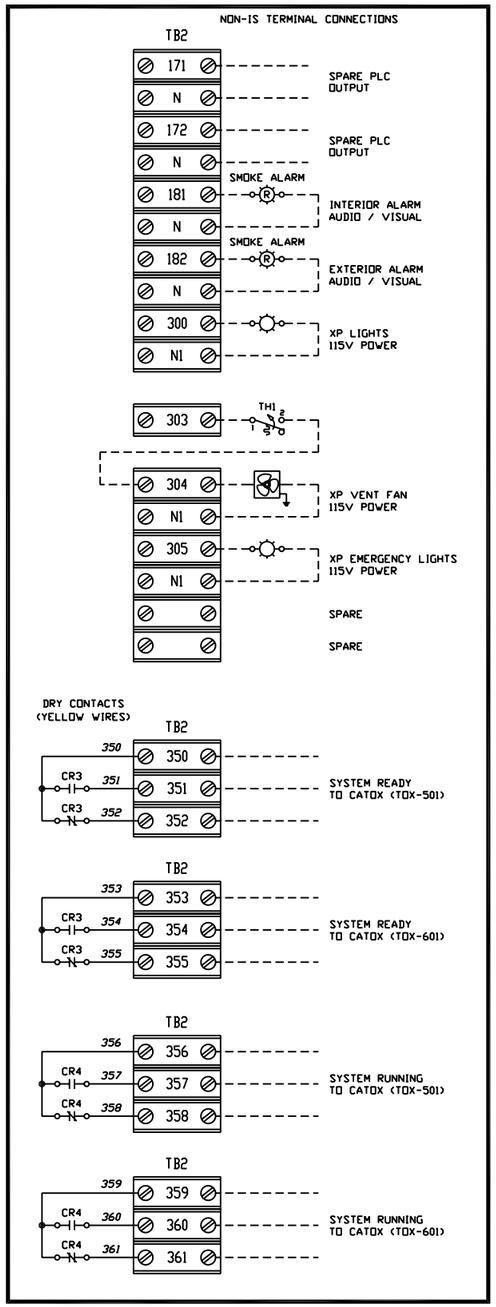

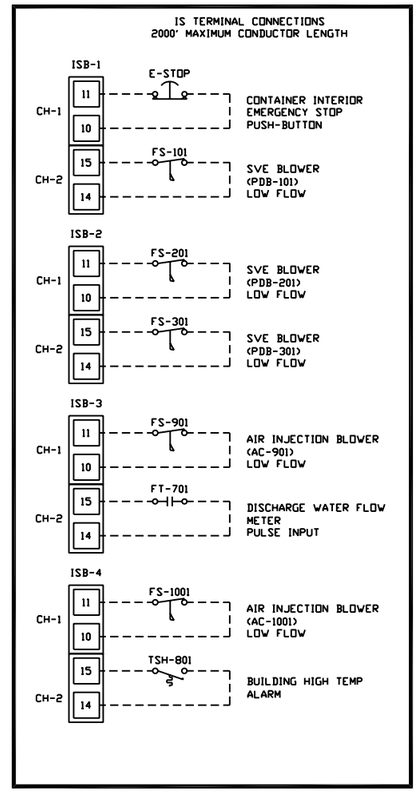

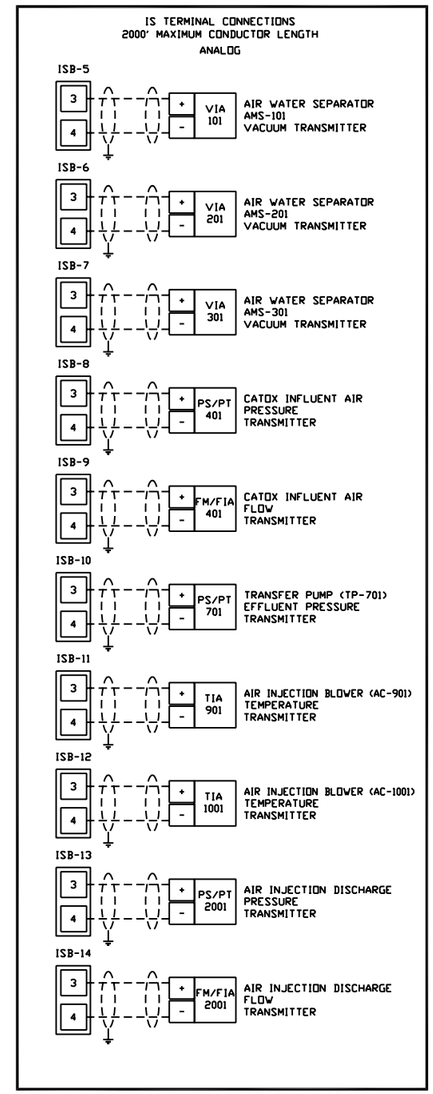

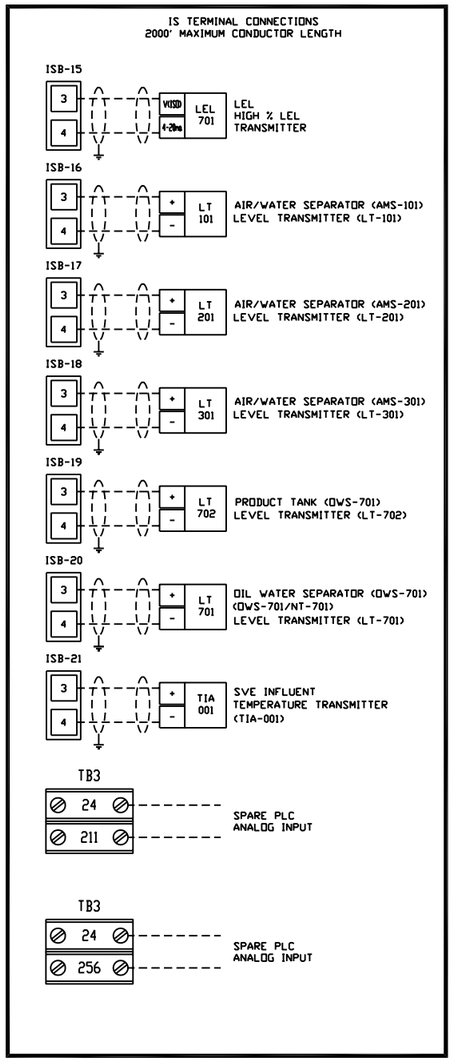

NOTE (A): REMOVE JUMPER AND CONNECT MOTOR THERMISTER IF PRESENT.

NOTE (B): BASED ON NFPA 70: NEC 2011 SET OVERLOAD RELAYS ACCORDING TO ACTUAL FLA AT INSTALLATION.

NOTE (C): UL LISTED 508A & 698A, TYPE 3R, INDUSTRIAL CONTROL PANELS.

NOTE (D): ———— WIRING BY BISCO WITHIN THIS PANEL.

NOTE (E): - - - - - - WIRING BY BISCO REMOTE TO THIS PANEL.

NOTE (F): ▬ ▬ ▬ ▬ ▬ ▬ REMOTE / FIELD WIRING BY OTHERS.

REV.	DESCRIPTION	DATE	APPR.
B	AS BUILT	11-28-11	LPC
A	CHANGED TO COMPACT GUARDLOGIX PLC	10-20-11	LPC

REVISIONS

CONFIDENTIALITY NOTE:
The information contained in this drawing is intended for use only by BISCO Environmental and the organization listed below. The information is confidential and any copying, distribution or dissemination without the consent of BISCO Environmental is STRICTLY PROHIBITED.

DRAWN BY LPC DATE 9-7-11

CHK BY DATE

APPR BY DATE

BISCO Environmental
Soil & Groundwater Remediation Equipment
Taunton, Massachusetts 02780

TITLE
CONTROL PANEL

XDD, LLC.
W.G. KRUMMRICH - SAUGET, IL

JOB NO. 12936

SCALE	SIZE	DWG NO.	SHEET	REV
N/A	B	12936RAS	8 OF 10	B

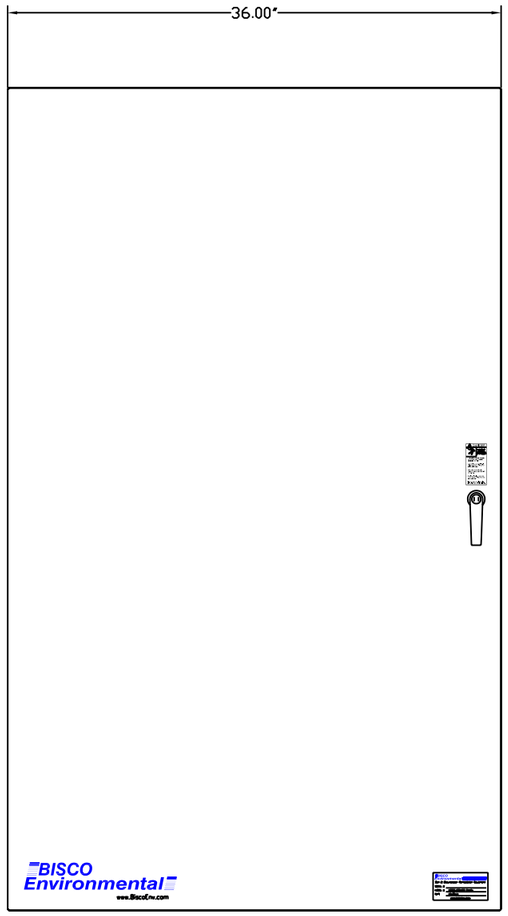

FRONT VIEW

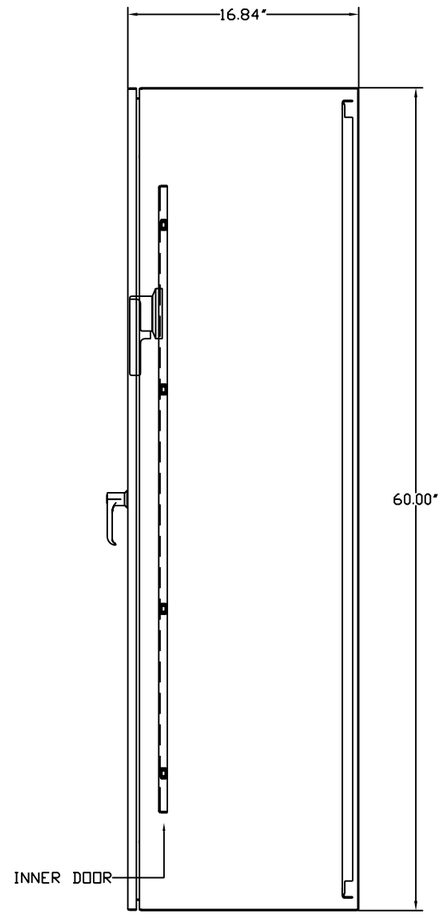

SIDE VIEW

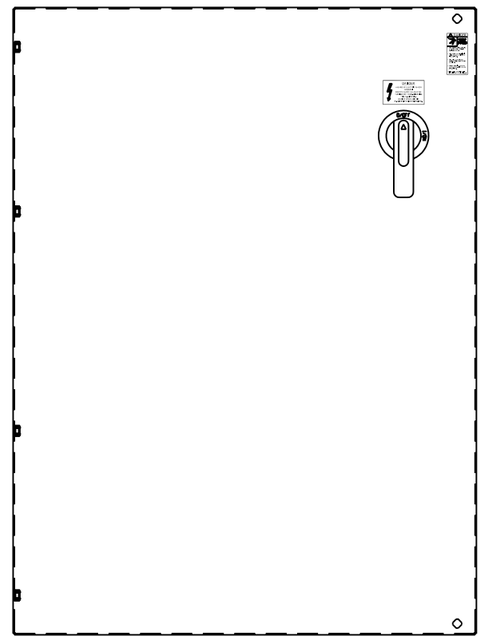

INNER DOOR

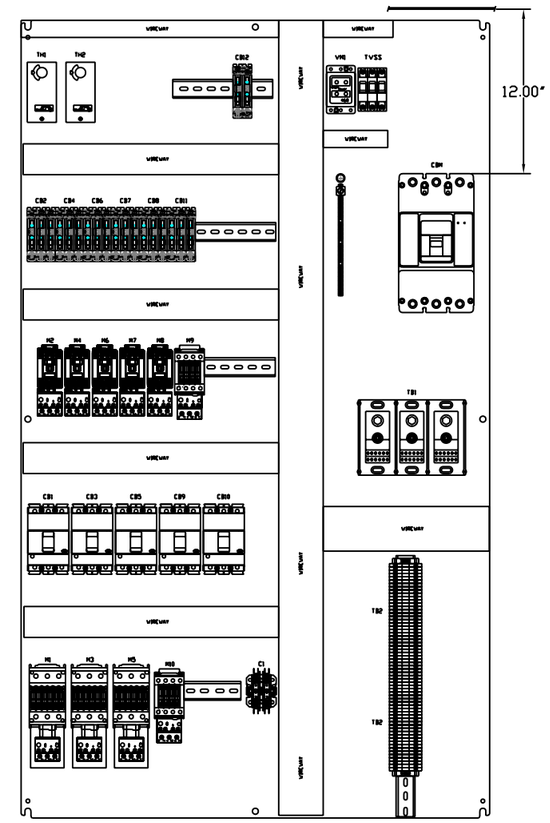

SUBPLATE LAYOUT

NOTE (A): REMOVE JUMPER AND CONNECT MOTOR THERMISTER IF PRESENT.

NOTE (B): BASED ON NFPA 70: NEC 2011 SET OVERLOAD RELAYS ACCORDING TO ACTUAL FLA AT INSTALLATION.

NOTE (C): UL LISTED 508A, TYPE 4, INDUSTRIAL CONTROL PANEL.

NOTE (D): ———— WIRING BY BISCO WITHIN THIS PANEL.

NOTE (E): - - - - - - WIRING BY BISCO REMOTE TO THIS PANEL.

NOTE (F): ▬ ▬ ▬ ▬ ▬ ▬ REMOTE / FIELD WIRING BY OTHERS.

REV.	DESCRIPTION	DATE	APPR.
B	AS BUILT	11-28-11	LPC
A	CHANGED TO COMPACT GUARDLOGIX PLC	10-20-11	LPC

REVISIONS

CONFIDENTIALITY NOTE:
The information contained in this drawing is intended for use only by BISCO Environmental and the organization listed below. The information is confidential and any copying, distribution or dissemination without the consent of BISCO Environmental is STRICTLY PROHIBITED.

DRAWN BY LPC DATE 9-7-11

CHK BY DATE

APPR BY DATE

BISCO Environmental
Soil & Groundwater Remediation Equipment
Taunton, Massachusetts 02780

TITLE POWER PANEL

XDD, LLC.
W.G. KRUMMRICH - SAUGET, IL

JOB NO. 12936

SCALE	SIZE	DWG NO.	SHEET	REV
N/A	B	12936RAS	9 OF 10	B

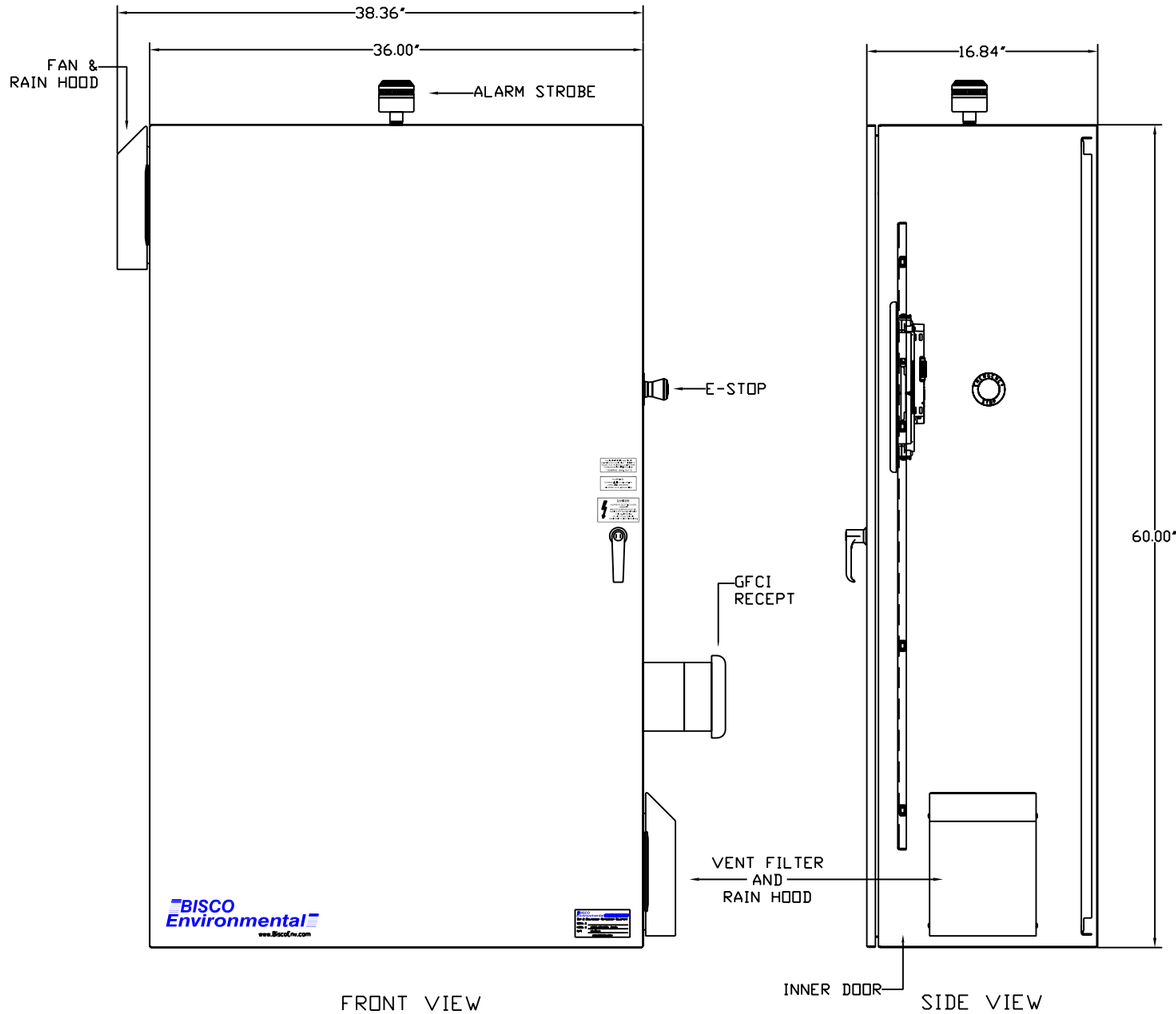

FRONT VIEW

SIDE VIEW

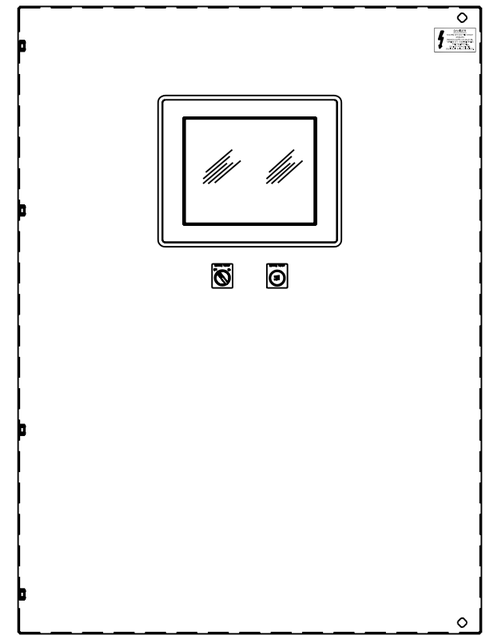

INNER DOOR

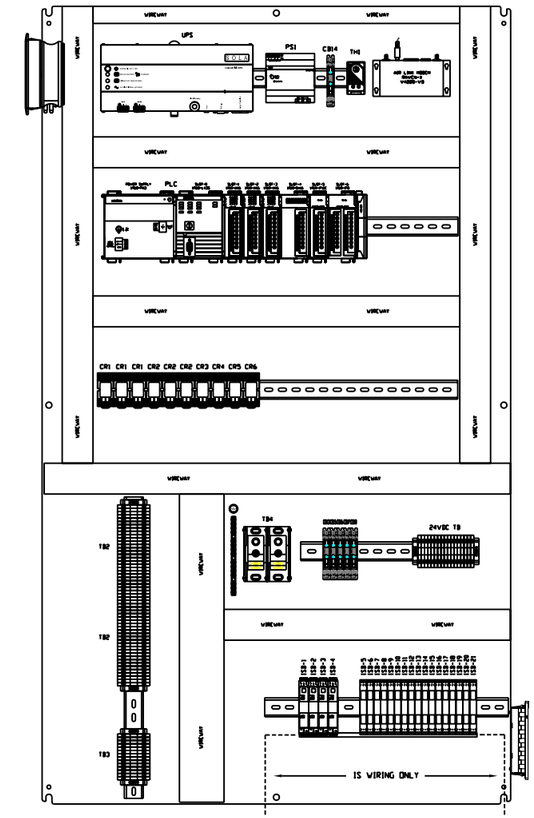

SUBPLATE LAYOUT

NOTE (A): REMOVE JUMPER AND CONNECT MOTOR THERMISTER IF PRESENT.

NOTE (B): BASED ON NFPA 70: NEC 2011 SET OVERLOAD RELAYS ACCORDING TO ACTUAL FLA AT INSTALLATION.

NOTE (C): UL LISTED 698A, TYPE 3R, INDUSTRIAL CONTROL PANEL.

NOTE (D): ———— WIRING BY BISCO WITHIN THIS PANEL.

NOTE (E): - - - - - - WIRING BY BISCO REMOTE TO THIS PANEL.

NOTE (F): ▬ ▬ ▬ ▬ ▬ REMOTE / FIELD WIRING BY OTHERS.

REV.	DESCRIPTION	DATE	APPR.
B	AS BUILT	11-28-11	LPC
A	CHANGED TO COMPACT GUARDLOGIX PLC	10-20-11	LPC

REVISIONS

CONFIDENTIALITY NOTE:
The information contained in this drawing is intended for use only by BISCO Environmental and the organization listed below. The information is confidential and any copying, distribution or dissemination without the consent of BISCO Environmental is STRICTLY PROHIBITED.

DRAWN BY LPC DATE 9-7-11

CHK BY DATE

APPR BY DATE

BISCO Environmental

Soil & Groundwater Remediation Equipment
Taunton, Massachusetts 02780

TITLE: CONTROL PANEL

XDD, LLC.
W.G. KRUMMRICH - SAUGET, IL

JOB NO. 12936

SCALE	SIZE	DWG NO.	SHEET	REV
N/A	B	12936RAS	10 OF 10	B

MCC PANEL WIRING

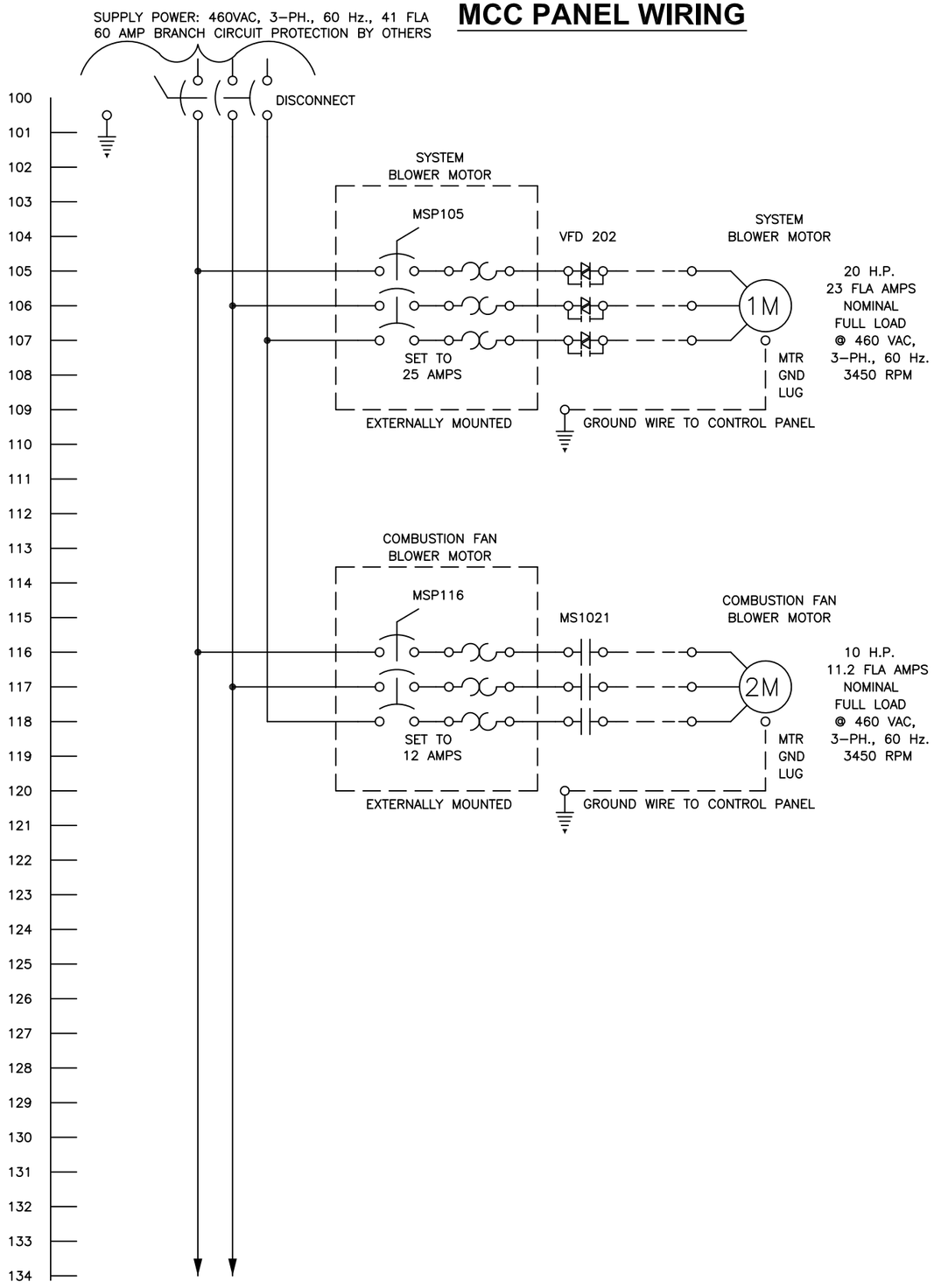

MCC PANEL WIRING

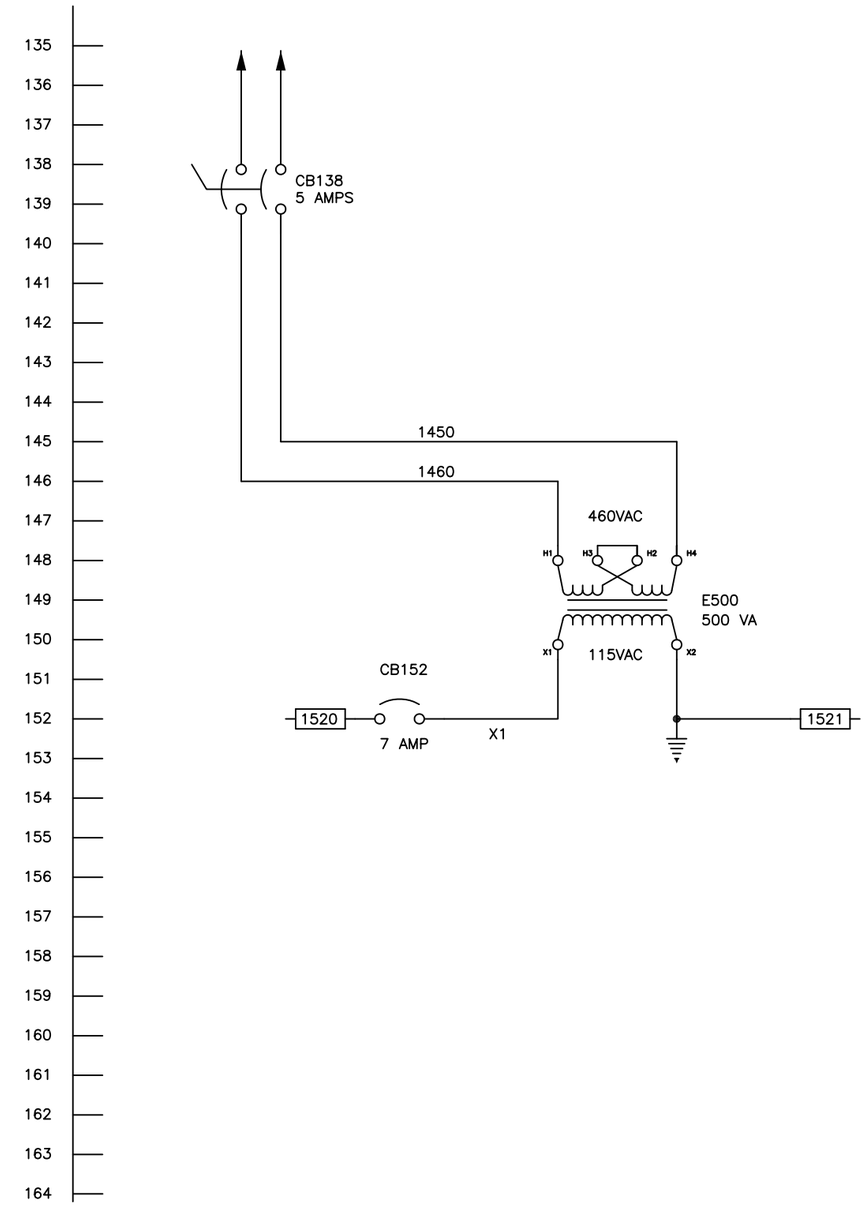

REV	BY	DATE	CHANGE
5	EAM	11/30/11	Global Fab Testing Updates
4	BPH	10/25/11	KF As Built
3	BPH	10/18/11	KF As Built
2	EAM	9/14/11	Moved Motor Overloads Outside Panel
1	BPH	9/2/11	Submittal

INTELLISHARE ENVIRONMENTAL
CLEAN AIR SOLUTIONS

PROJECT ID

TITLE
ELECTRICAL SCHEMATIC
T02000

DRAWING NO. N-11-1198-401

SCALE NONE

DRAWN EAM DATE 8/7/11

CHECKED DATE

APPROVED DATE

LAST DRAWN BY EAM DATE 8/7/11

CUSTOMER
Solutia
W.G. Krummerich Facility
Sauget, IL

KF NUMBER 11291

PAGE 1 OF 1

LAST PLOTTED BY EAM DATE 8/7/11

MCC PANEL WIRING

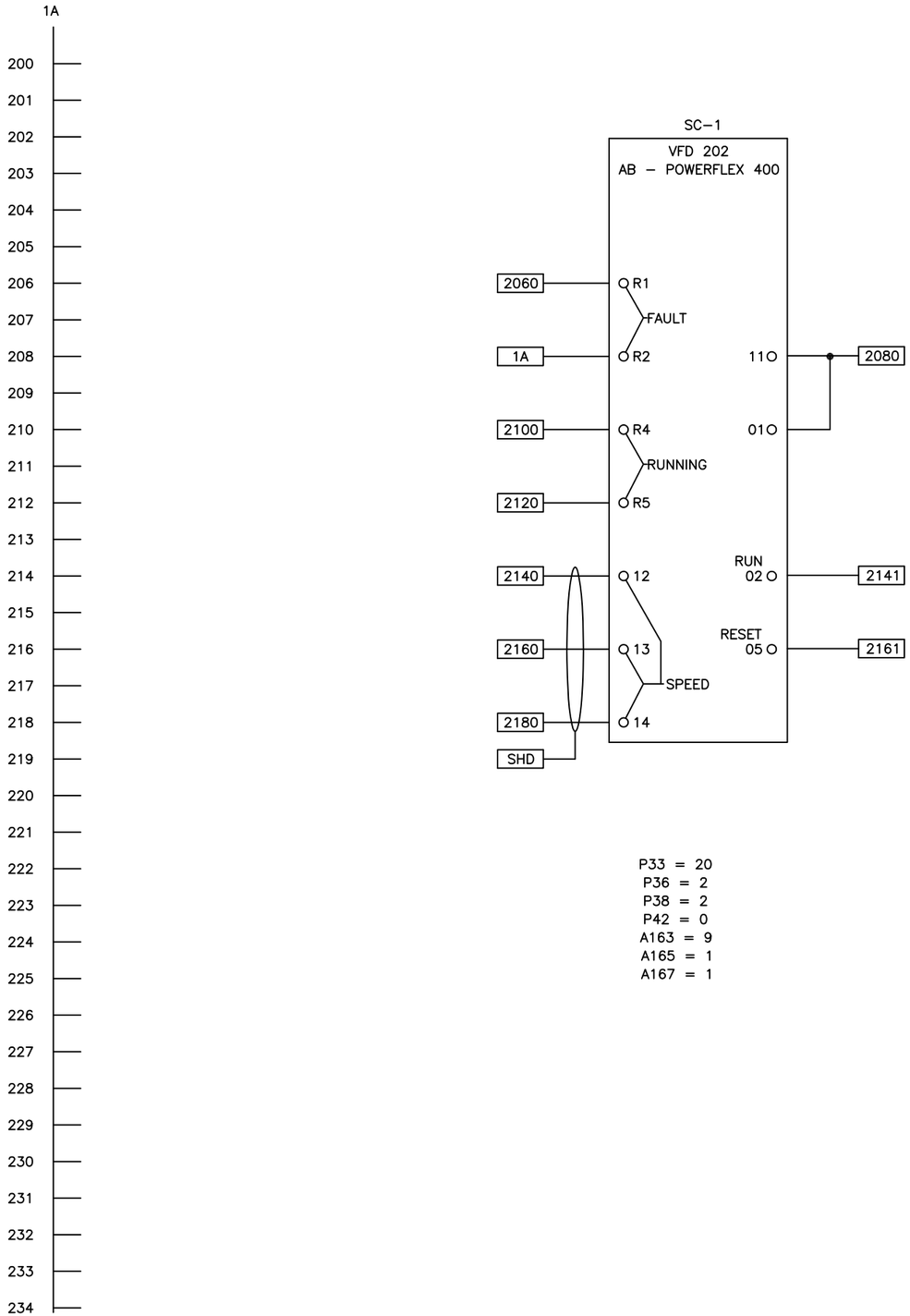

P33 = 20
P36 = 2
P38 = 2
P42 = 0
A163 = 9
A165 = 1
A167 = 1

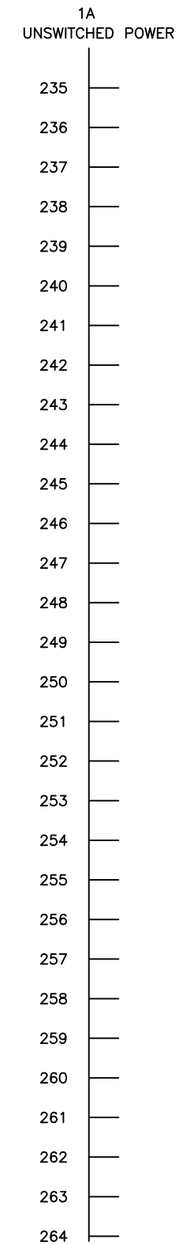

MCC PANEL WIRING

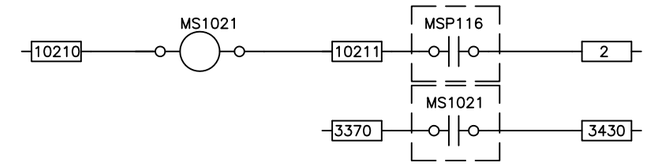

REV	BY	DATE	CHANGE
5	EAM	11/30/11	Global Fab Testing Updates
4	BPH	10/25/11	KF As Built
3	BPH	10/18/11	KF As Built
2	EAM	9/14/11	Moved Motor Overloads Outside Panel
1	BPH	9/2/11	Submittal

INTELLISHARE ENVIRONMENTAL
CLEAN AIR SOLUTIONS

PROJECT ID

TITLE
ELECTRICAL SCHEMATIC
T02000

DRAWING NO. N–11–1198 –402

SCALE NONE

DRAWN EAM DATE 8/7/11
CHECKED DATE
APPROVED DATE

CUSTOMER
Solutia
W.G. Krummerich Facility
Sauget, IL

LAST DRAWN BY EAM DATE 8/7/11
KF NUMBER 11291
PAGE 1 OF 1

LAST PLOTTED BY EAM DATE 8/7/11

MCP PANEL WIRING

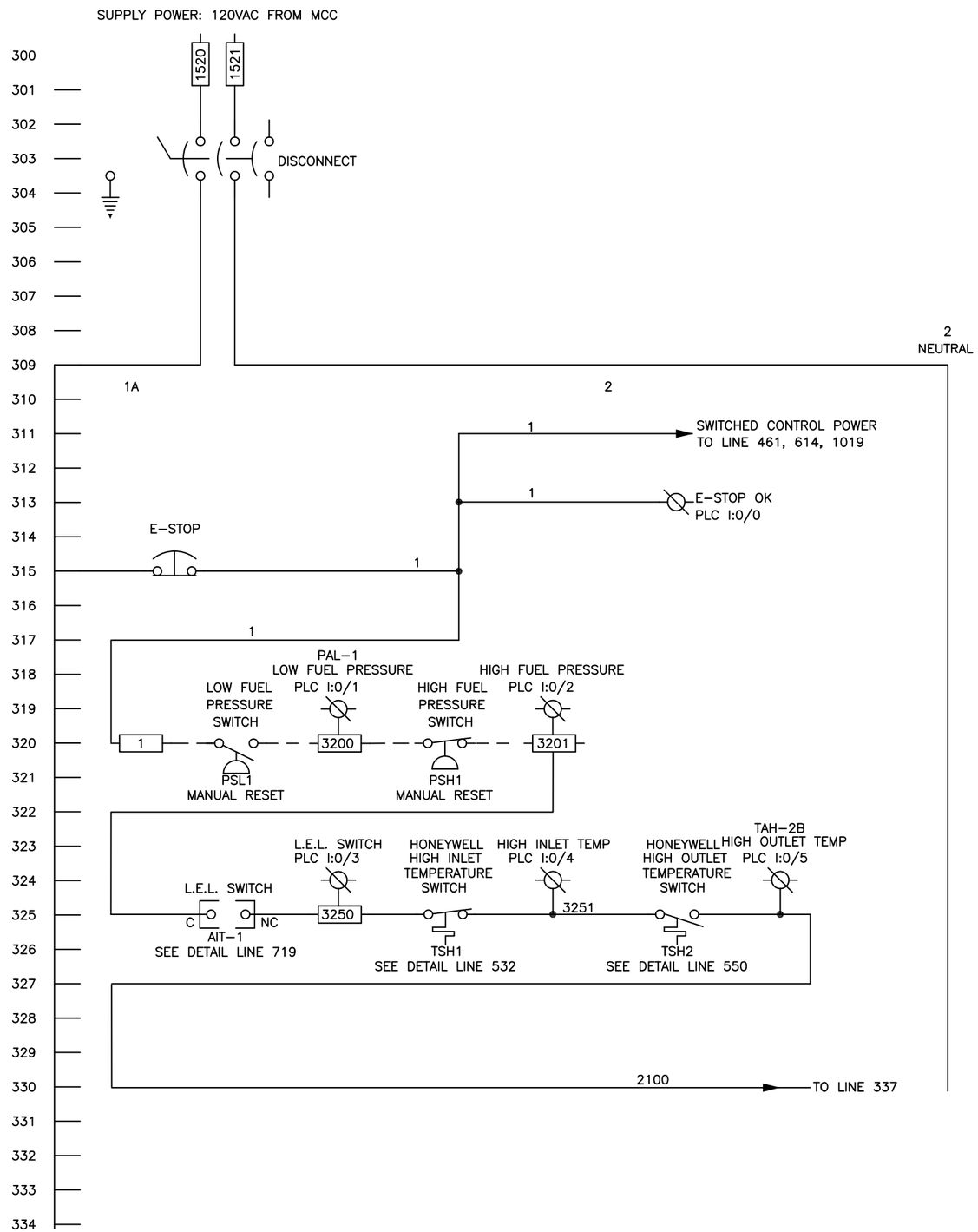

MCP PANEL WIRING

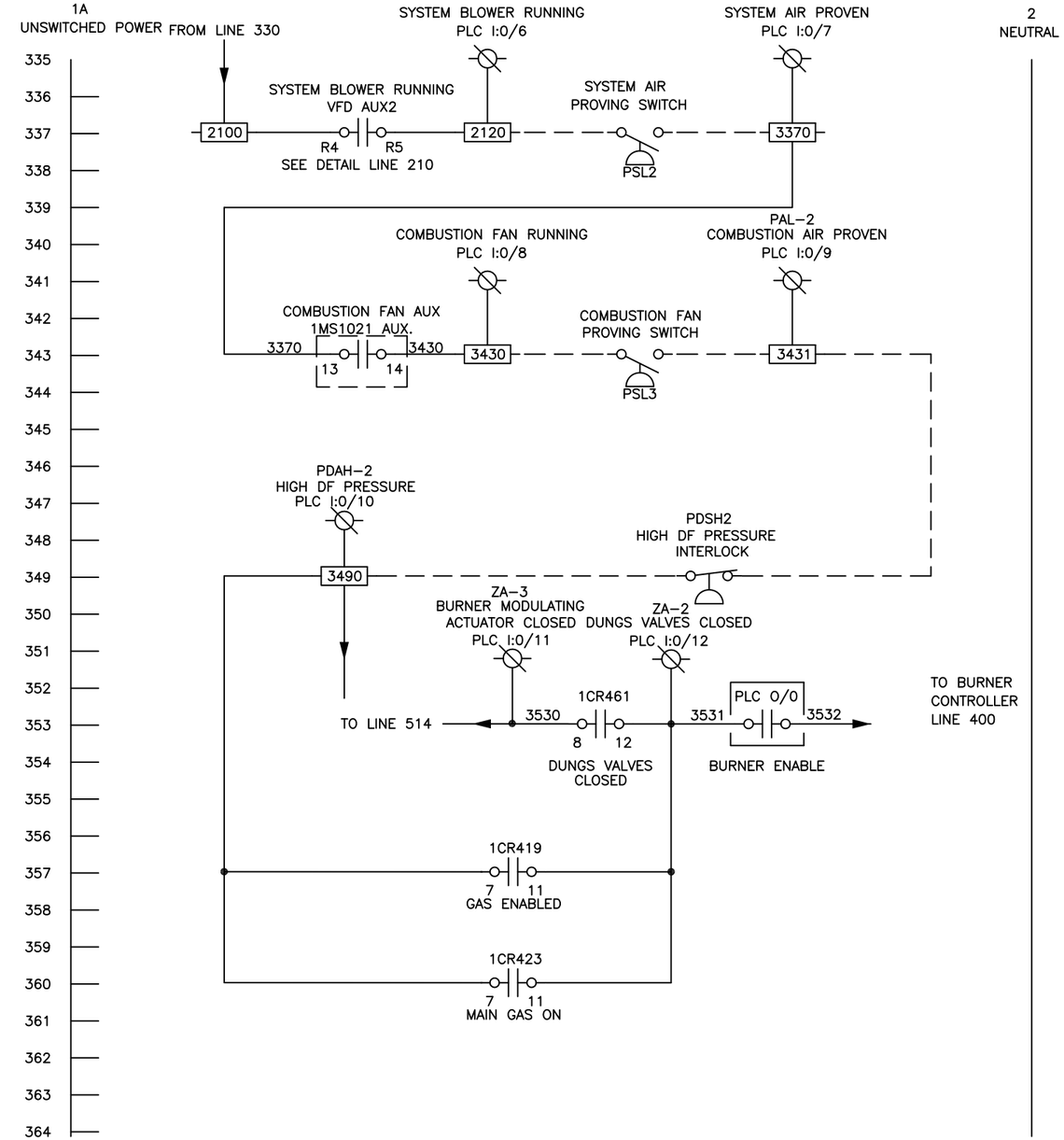

REV	BY	DATE	CHANGE
5	EAM	11/30/11	Global Fab Testing Updates
4	BPH	10/25/11	KF As Built
3	BPH	10/18/11	KF As Built
2	EAM	9/14/11	Moved Motor Overloads Outside Panel
1	BPH	9/2/11	Submittal

INTELLISHARE ENVIRONMENTAL
CLEAN AIR SOLUTIONS

PROJECT ID

TITLE
ELECTRICAL SCHEMATIC
T02000

DRAWING NO. N-11-1198-403

SCALE NONE

DRAWN EAM DATE 8/7/11

CHECKED DATE

APPROVED DATE

CUSTOMER
Solutia
W.G. Krummerich Facility
Sauget, IL

LAST DRAWN BY EAM DATE 8/7/11

KF NUMBER 11291

PAGE 1 OF 1

LAST PLOTTED BY EAM DATE 8/7/11

MCP PANEL WIRING

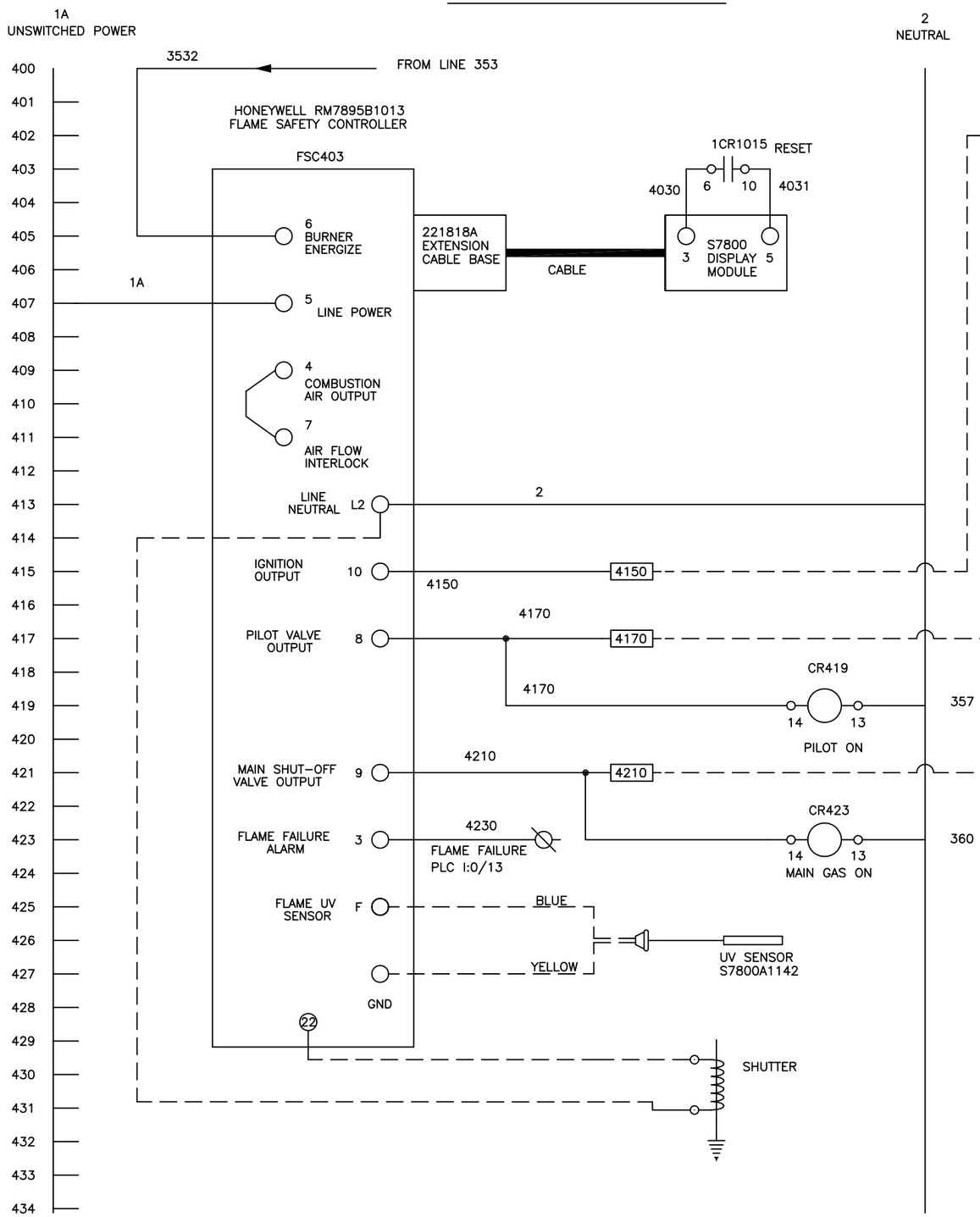

MCP PANEL WIRING

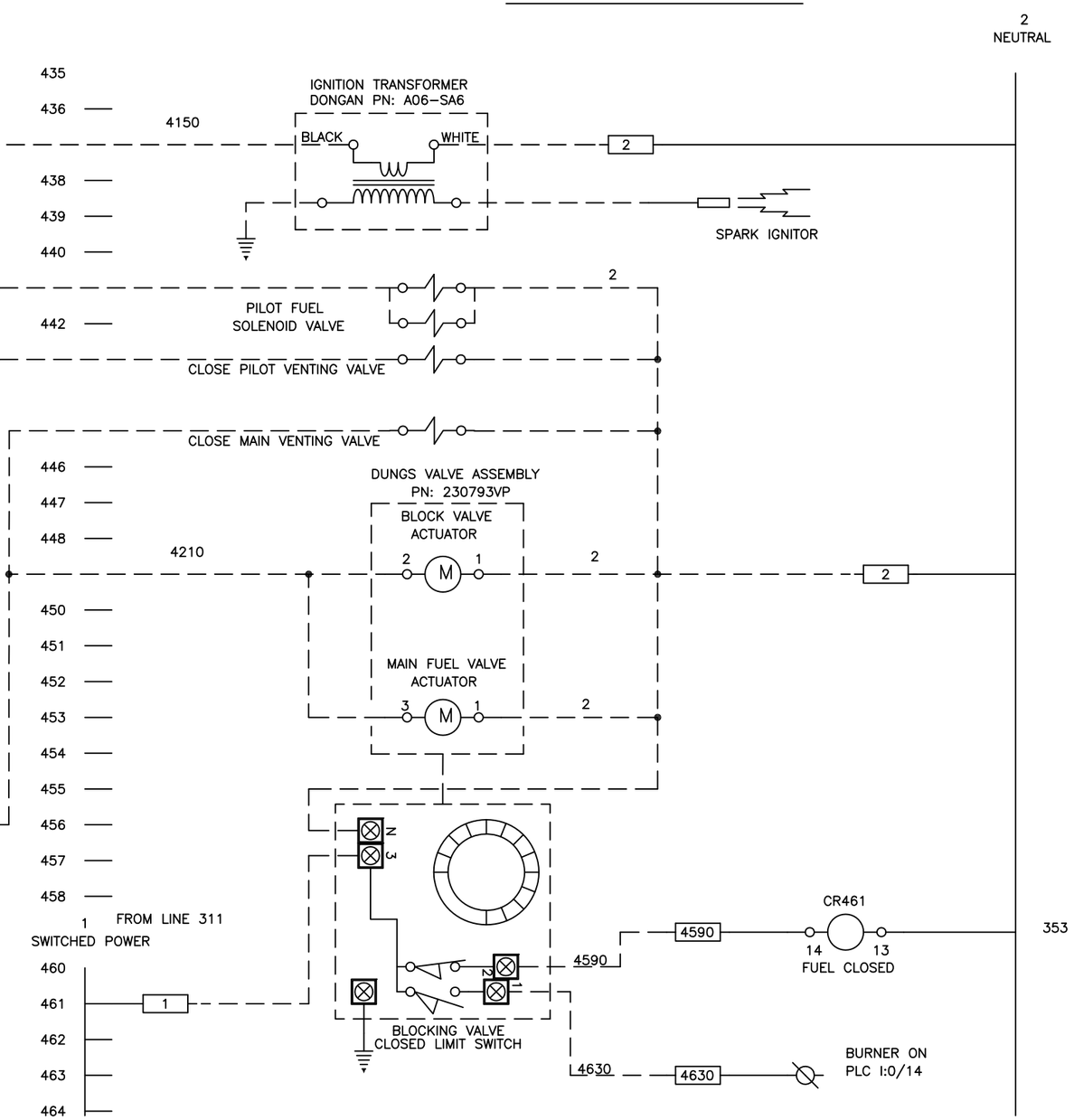

REV	BY	DATE	CHANGE
5	EAM	11/30/11	Global Fab Testing Updates
4	BPH	10/25/11	KF As Built
3	BPH	10/18/11	KF As Built
2	EAM	9/14/11	Moved Motor Overloads Outside Panel
1	BPH	9/2/11	Submittal

INTELLISHARE ENVIRONMENTAL
CLEAN AIR SOLUTIONS

PROJECT ID

TITLE
ELECTRICAL SCHEMATIC
T02000

DRAWING NO. N-11-1198-404

SCALE NONE

DRAWN EAM DATE 8/7/11

CHECKED DATE

APPROVED DATE

LAST DRAWN BY EAM DATE 8/7/11

CUSTOMER
Solutia
W.G. Krummerich Facility
Sauget, IL

KF NUMBER 11291

PAGE 1 OF 1

LAST PLOTTED BY EAM DATE 8/7/11

MCP PANEL WIRING

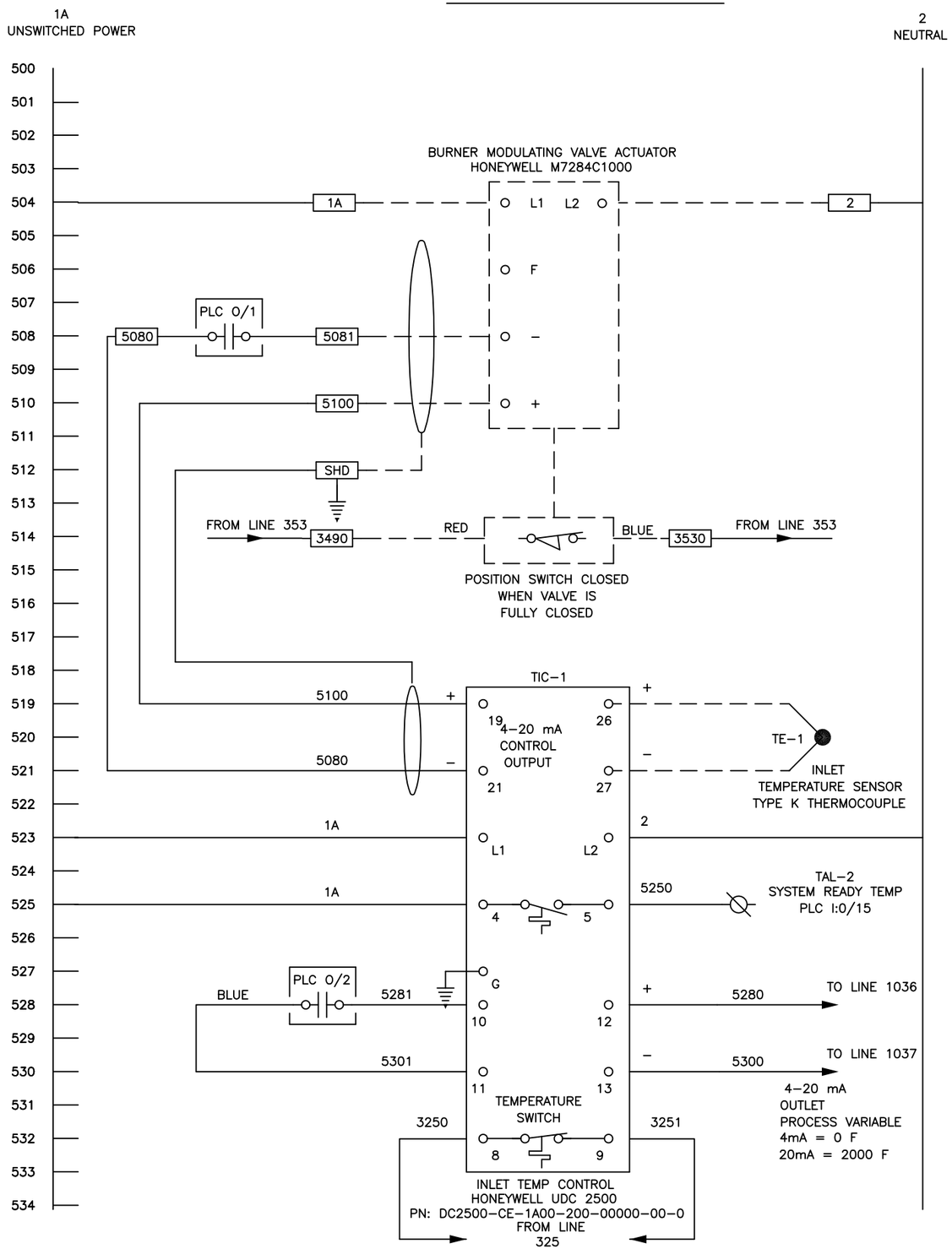

MCP PANEL WIRING

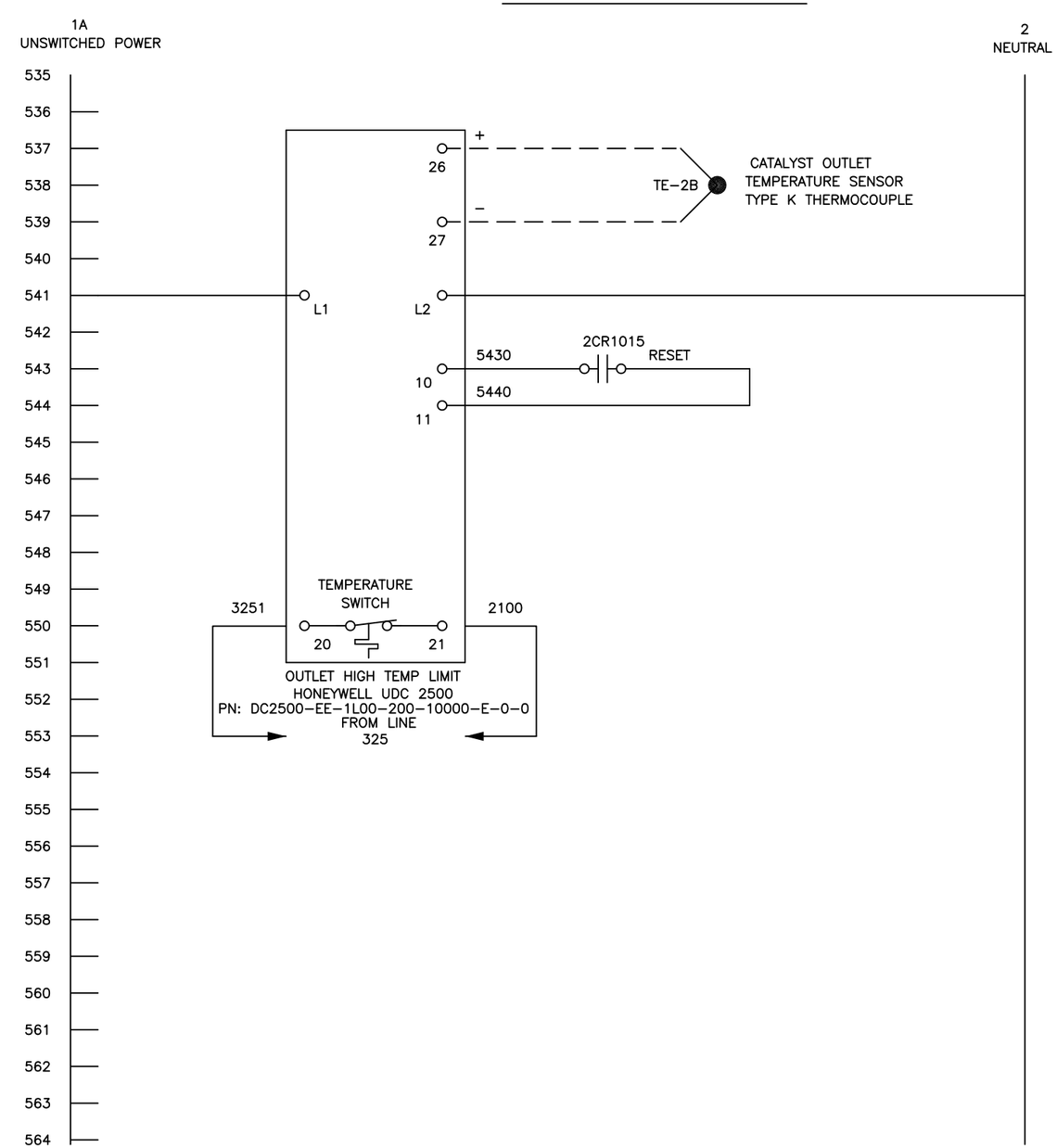

REV	BY	DATE	CHANGE
5	EAM	11/30/11	Global Fab Testing Updates
4	BPH	10/25/11	KF As Built
3	BPH	10/18/11	KF As Built
2	EAM	9/14/11	Moved Motor Overloads Outside Panel
1	BPH	9/2/11	Submittal

INTELLISHARE ENVIRONMENTAL
CLEAN AIR SOLUTIONS

PROJECT ID

TITLE
ELECTRICAL SCHEMATIC
T02000

DRAWING NO. N–11–1198 –405

SCALE NONE

DRAWN EAM DATE 8/7/11

CHECKED DATE

APPROVED DATE

LAST DRAWN BY EAM DATE 8/7/11

CUSTOMER
Solutia
W.G. Krummerich Facility
Sauget, IL

KF NUMBER 11291

PAGE 1 OF 1

LAST PLOTTED BY EAM DATE 8/7/11

MCP PANEL WIRING

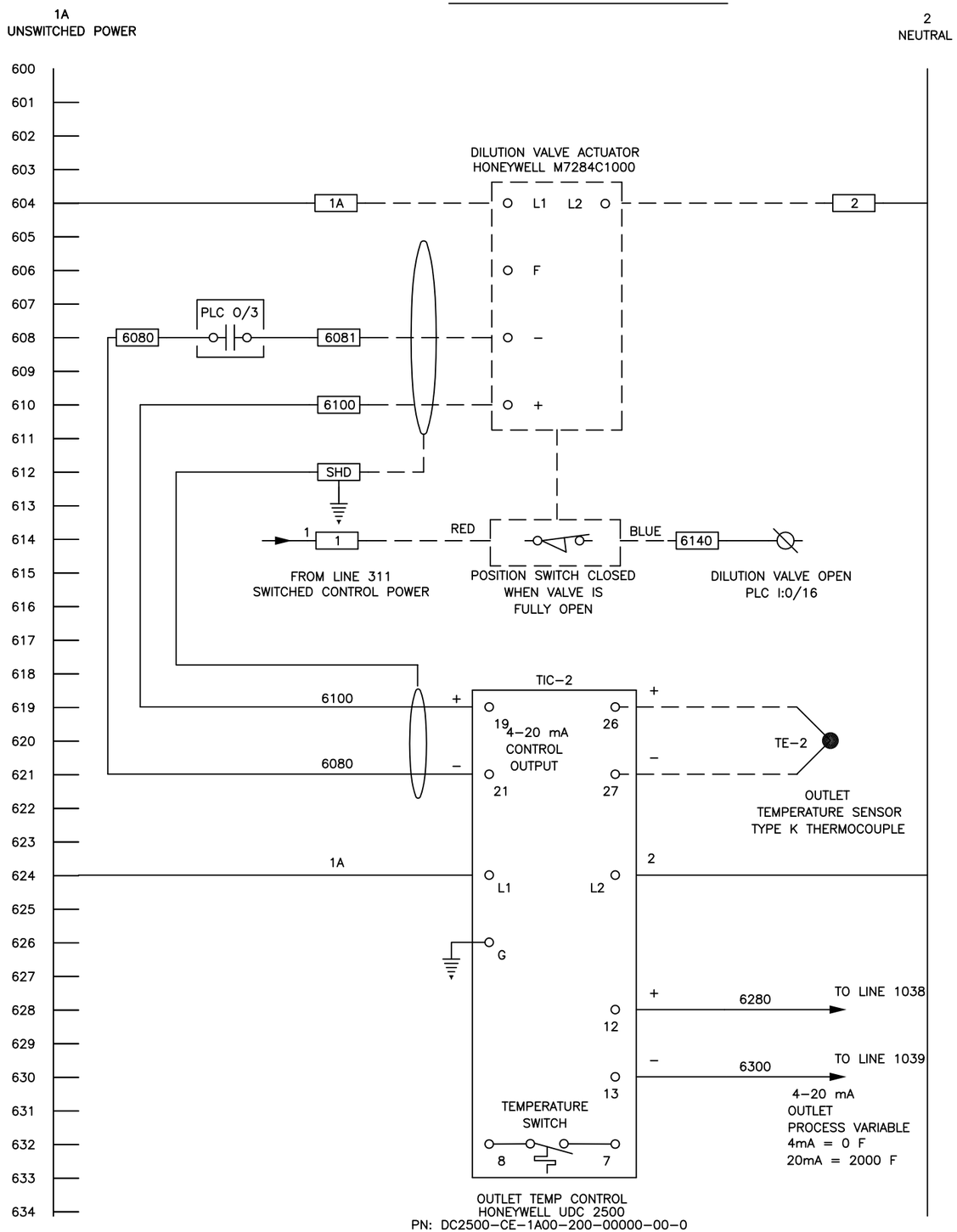

MCP PANEL WIRING

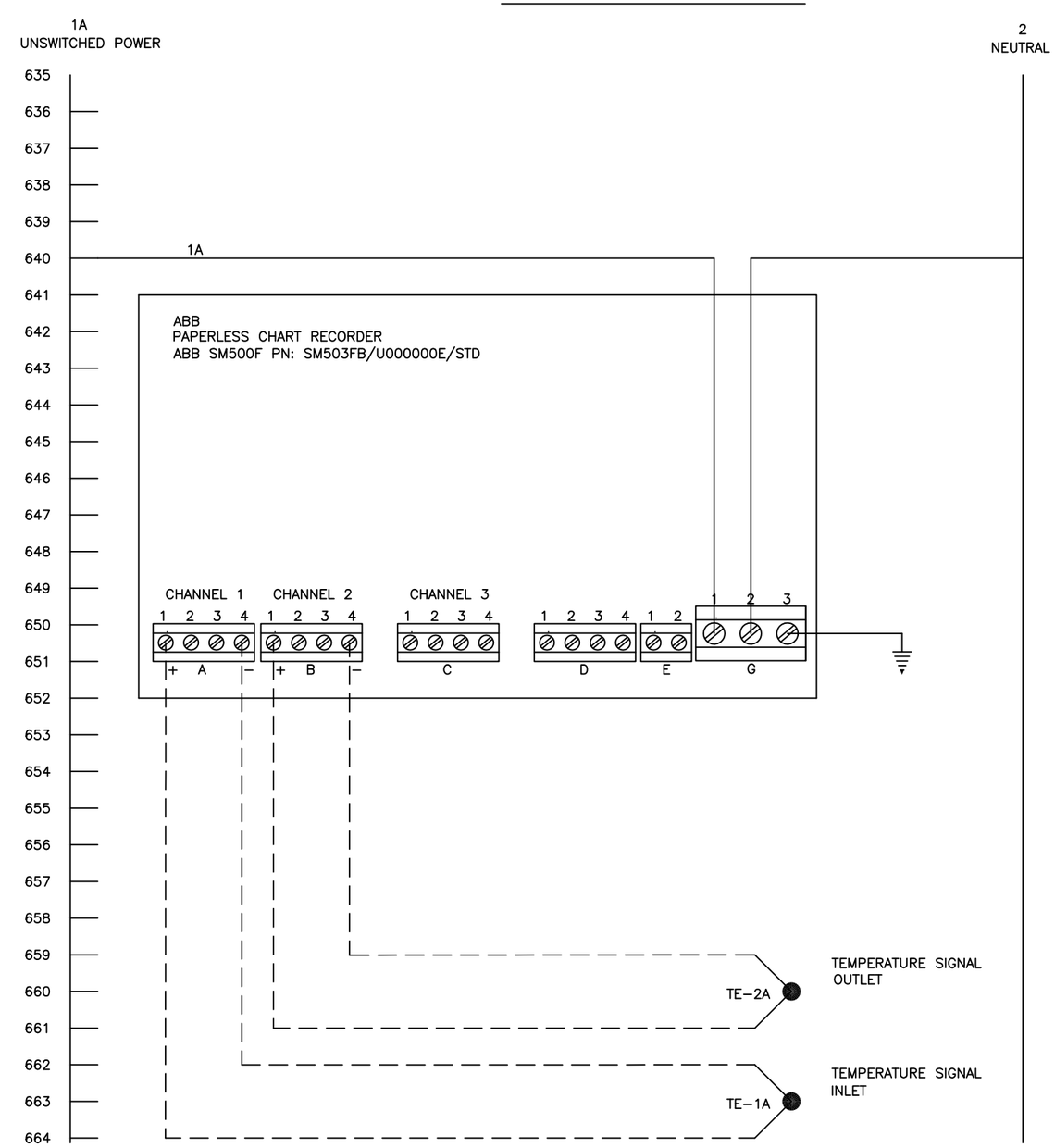

REV	BY	DATE	CHANGE
5	EAM	11/30/11	Global Fab Testing Updates
4	BPH	10/25/11	KF As Built
3	BPH	10/18/11	KF As Built
2	EAM	9/14/11	Moved Motor Overloads Outside Panel
1	BPH	9/2/11	Submittal

INTELLISHARE ENVIRONMENTAL
CLEAN AIR SOLUTIONS

PROJECT ID

TITLE
ELECTRICAL SCHEMATIC
T02000

DRAWING NO. N–11–1198 –406

SCALE NONE

DRAWN EAM DATE 8/7/11

CHECKED DATE

APPROVED DATE

LAST DRAWN BY EAM DATE 8/7/11

CUSTOMER
Solutia
W.G. Krummerich Facility
Sauget, IL

KF NUMBER 11291

PAGE 1 OF 1

LAST PLOTTED BY EAM DATE 8/7/11

MCP PANEL WIRING

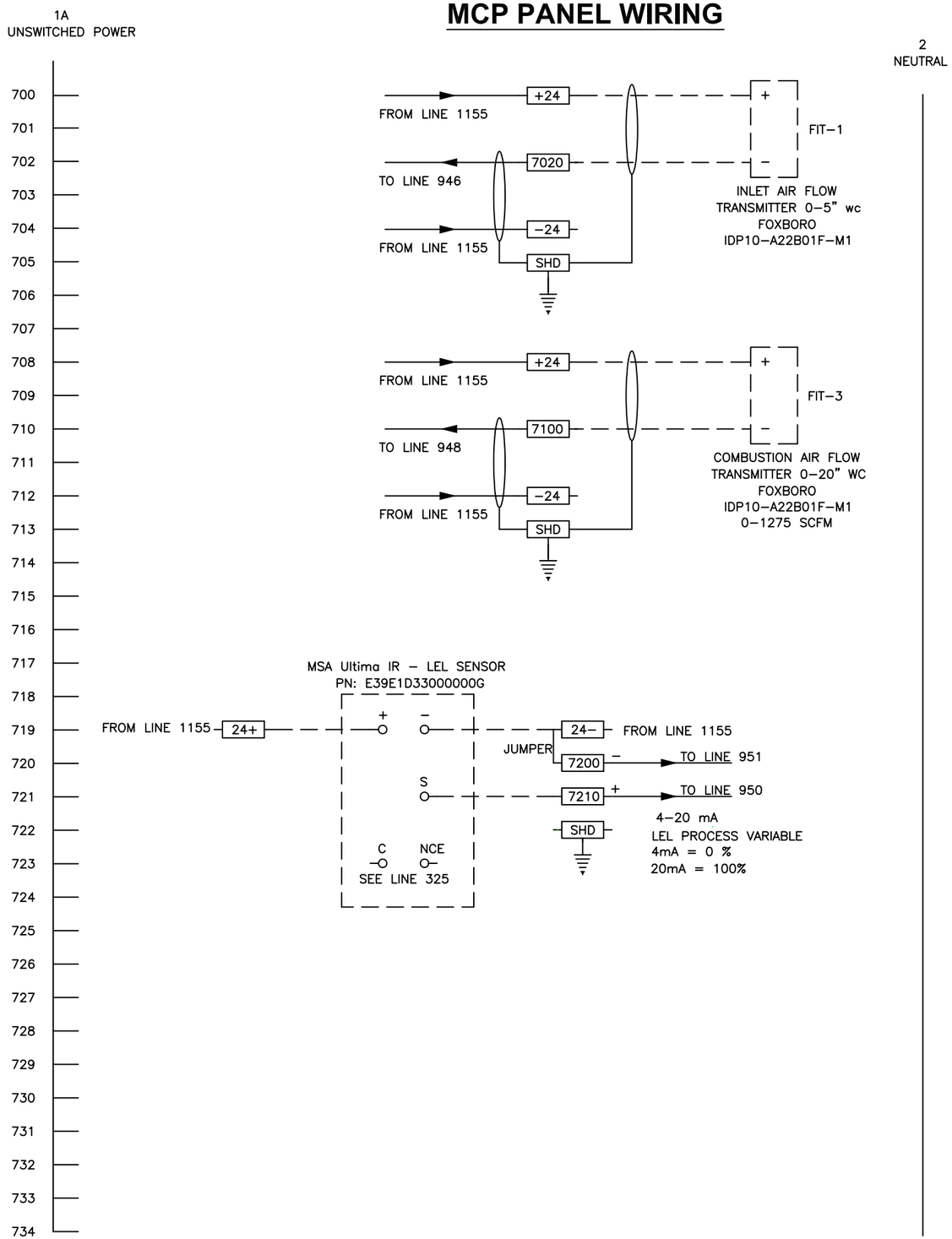

MCP PANEL WIRING

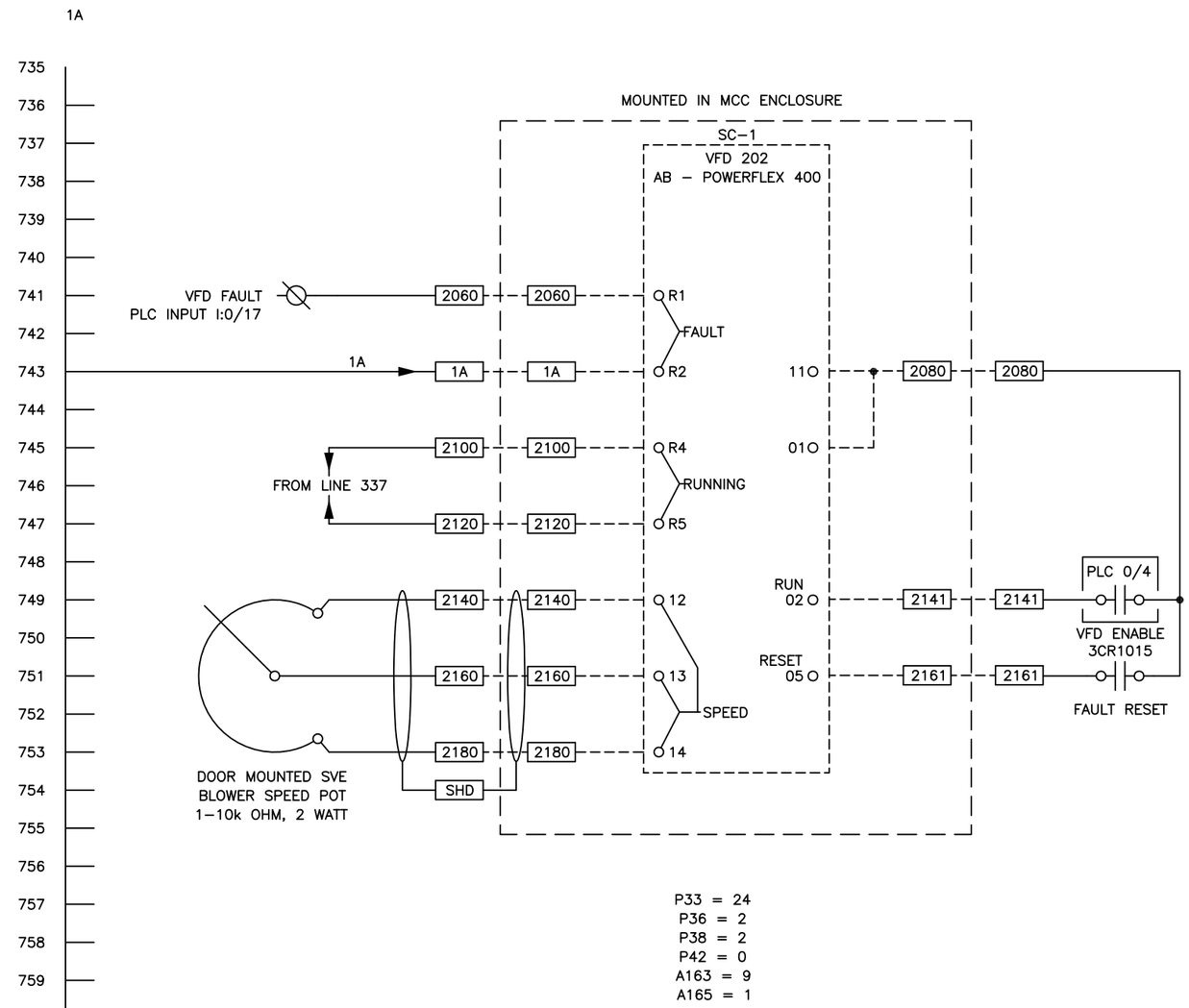

REV	BY	DATE	CHANGE
5	EAM	11/30/11	Global Fab Testing Updates
4	BPH	10/25/11	KF As Built
3	BPH	10/18/11	KF As Built
2	EAM	9/14/11	Moved Motor Overloads Outside Panel
1	BPH	9/2/11	Submittal

INTELLISHARE ENVIRONMENTAL
CLEAN AIR SOLUTIONS

PROJECT ID

TITLE
ELECTRICAL SCHEMATIC
T02000

DRAWING NO. N−11−1198 −407

SCALE NONE

DRAWN EAM DATE 8/7/11

CHECKED DATE

APPROVED DATE

LAST DRAWN BY EAM DATE 8/7/11

CUSTOMER
Solutia
W.G. Krummerich Facility
Sauget, IL

KF NUMBER 11291

PAGE 1 OF 1

LAST PLOTTED BY EAM DATE 8/7/11

MCP PANEL WIRING

MCP PANEL WIRING

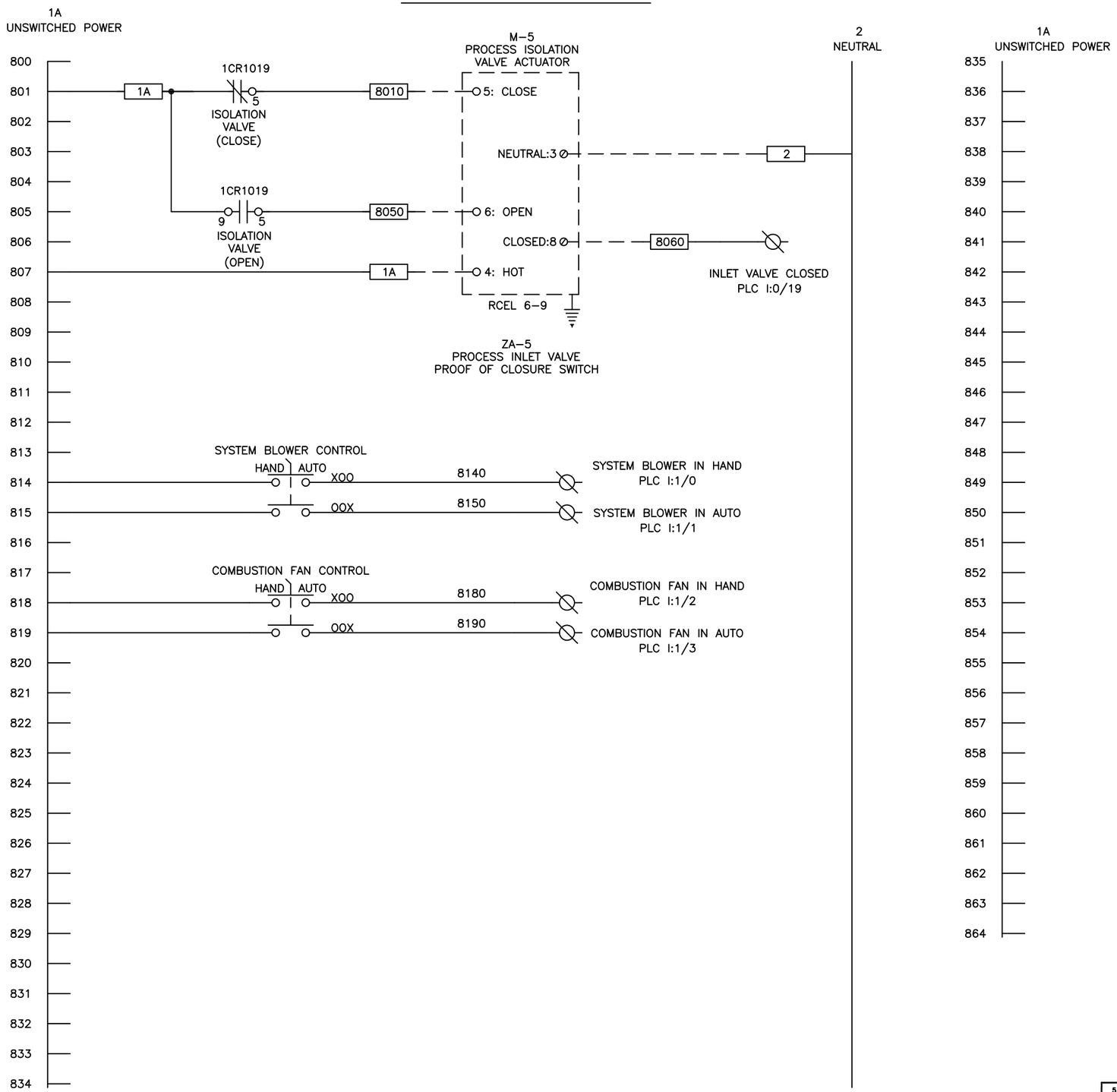

REV	BY	DATE	CHANGE
5	EAM	11/30/11	Global Fab Testing Updates
4	BPH	10/25/11	KF As Built
3	BPH	10/18/11	KF As Built
2	EAM	9/14/11	Moved Motor Overloads Outside Panel
1	BPH	9/2/11	Submittal

INTELLISHARE ENVIRONMENTAL
CLEAN AIR SOLUTIONS

PROJECT ID

TITLE
ELECTRICAL SCHEMATIC
T02000

DRAWING NO. N-11-1198-408

SCALE NONE

DRAWN EAM DATE 8/7/11

CHECKED DATE

APPROVED DATE

LAST DRAWN BY EAM DATE 8/7/11

CUSTOMER
Solutia
W.G. Krummerich Facility
Sauget, IL

KF NUMBER 11291

PAGE 1 OF 1

LAST PLOTTED BY EAM DATE 8/7/11

MCP PANEL WIRING

1A UNSWITCHED POWER

2 NEUTRAL

PLC – BASE UNIT
ALLEN–BRADLEY
1766–L32AWA
MICROLOGIX 1400

PLC INPUTS REFERENCE

Line	Signal	Ref	Point	Common
900				
901	E–STOP – SEE LINE 313	1	I:0/0	AC COM0
902	LOW FUEL PRESSURE SWITCH – SEE LINE 320	3200	I:0/1	
903	HIGH FUEL PRESSURE SWITCH – SEE LINE 320	3201	I:0/2	
904	L.E.L. SWITCH – SEE LINE 325	3250	I:0/3	
905	HIGH INLET TEMP – SEE LINE 325	3251	I:0/4	AC COM1
906	HIGH OUTLET TEMP – SEE LINE 325	2100	I:0/5	
907	SYSTEM BLOWER RUNNING – SEE LINE 337	2120	I:0/6	
908	SYSTEM AIR PROVEN – SEE LINE 337	3370	I:0/7	
909	COMBUSTION FAN RUNNING – SEE LINE 343	3430	I:0/8	AC COM2
910	COMBUSTION FAN AIR PROVEN – SEE LINE 343	3431	I:0/9	
911	HIGH DF PRESSURE – SEE LINE 349	3490	I:0/10	
912	BURNER GAS VALVE CLOSED – SEE LINE 353	3530	I:0/11	
913	DUNGS VALVES CLOSED – SEE LINE 353	3531	I:0/12	AC COM3
914	FLAME FAILURE – SEE LINE 423	4230	I:0/13	
915	BURNER ON – SEE LINE 463	4630	I:0/14	
916	SYSTEM READY TEMP – SEE LINE 525	5250	I:0/15	
917	DILUTION VALVE OPEN – SEE LINE 614	6140	I:0/16	
918	SYSTEM BLOWER VFD FAULT – SEE LINE 741	2060	I:0/17	
919	SVE/AS SYSTEM RUNNING – SEE LINE 1047	10470	I:0/18	
920	SYSTEM INLET VALVE CLOSED – SEE LINE 806	8060	I:0/19	
921	INLET TEMP – SEE LINE 5280	5280	IA COM	
922	OUTLET TEMP – SEE LINE 6280	6280	IV (+)	
923	TEMP COMMON – SEE LINE 5300 & 6300	5300	IV (+)	
924				
925				
926				
927				

1762–IA8

Line	Signal	Ref	Point	Common
928	SYSTEM BLOWER IN HAND – SEE LINE 814	8140	I:1/0	
929	SYSTEM BLOWER IN AUTO – SEE LINE 815	8150	I:1/1	AC COM
930	COMBUSTION BLOWER IN HAND – SEE LINE 814	8180	I:1/2	
931	COMBUSTION BLOWER IN AUTO – SEE LINE 815	8190	I:1/3	
932			I:1/4	
933			I:1/5	AC COM
934			I:1/6	
			I:1/7	

1A UNSWITCHED POWER

MCP PANEL WIRING

2 NEUTRAL

935 936 937 938 939 940 941 942 943 944 945 946 947 948 949 950 951 952 953 954 955 956 957 958 959 960 961 962 963 964

1762–IF4

Signal	Ref	Point
INLET AIR FLOW – SEE LINE 702	7020	I:2.0+
	–24	I:2.0–
STACK AIR FLOW – SEE LINE 710	7100	I:2.1+
	–24	I:2.1–
LEL – SEE LINE 719	7210	I:2.2+
	7200	I:2.2–
SPARE	.	I:2.3+
	.	I:2.3–

1762–IT4

Signal	Ref	Wire	Point
STACK TEMP – HX BYPASSED TYPE K THERMOCOUPLE	TE–3	YELLOW	I:3.0+
		RED	I:3.0–
HEAT EXCHANGER OUTLET TEMP TYPE K THERMOCOUPLE	TE–4	YELLOW	I:3.1+
		RED	I:3.1–
FLAME ARRESTOR OUTLET TEMP TYPE K THERMOCOUPLE	TE–5	YELLOW	I:3.2+
		RED	I:3.2–
STACK TEMP – HX MODE TYPE K THERMOCOUPLE	TE–3	YELLOW	I:3.3+
		RED	I:3.3–

REV	BY	DATE	CHANGE
5	EAM	11/30/11	Global Fab Testing Updates
4	BPH	10/25/11	KF As Built
3	BPH	10/18/11	KF As Built
2	EAM	9/14/11	Moved Motor Overloads Outside Panel
1	BPH	9/2/11	Submittal

INTELLISHARE ENVIRONMENTAL
CLEAN AIR SOLUTIONS

PROJECT ID

TITLE: ELECTRICAL SCHEMATIC T02000

DRAWING NO. N–11–1198 –409

SCALE NONE

DRAWN EAM DATE 8/7/11

CHECKED DATE

APPROVED DATE

LAST DRAWN BY EAM DATE 8/7/11

CUSTOMER: Solutia, W.G. Krummerich Facility, Sauget, IL

KF NUMBER 11291

PAGE 1 OF 1

LAST PLOTTED BY EAM DATE 8/7/11

MCP PANEL WIRING

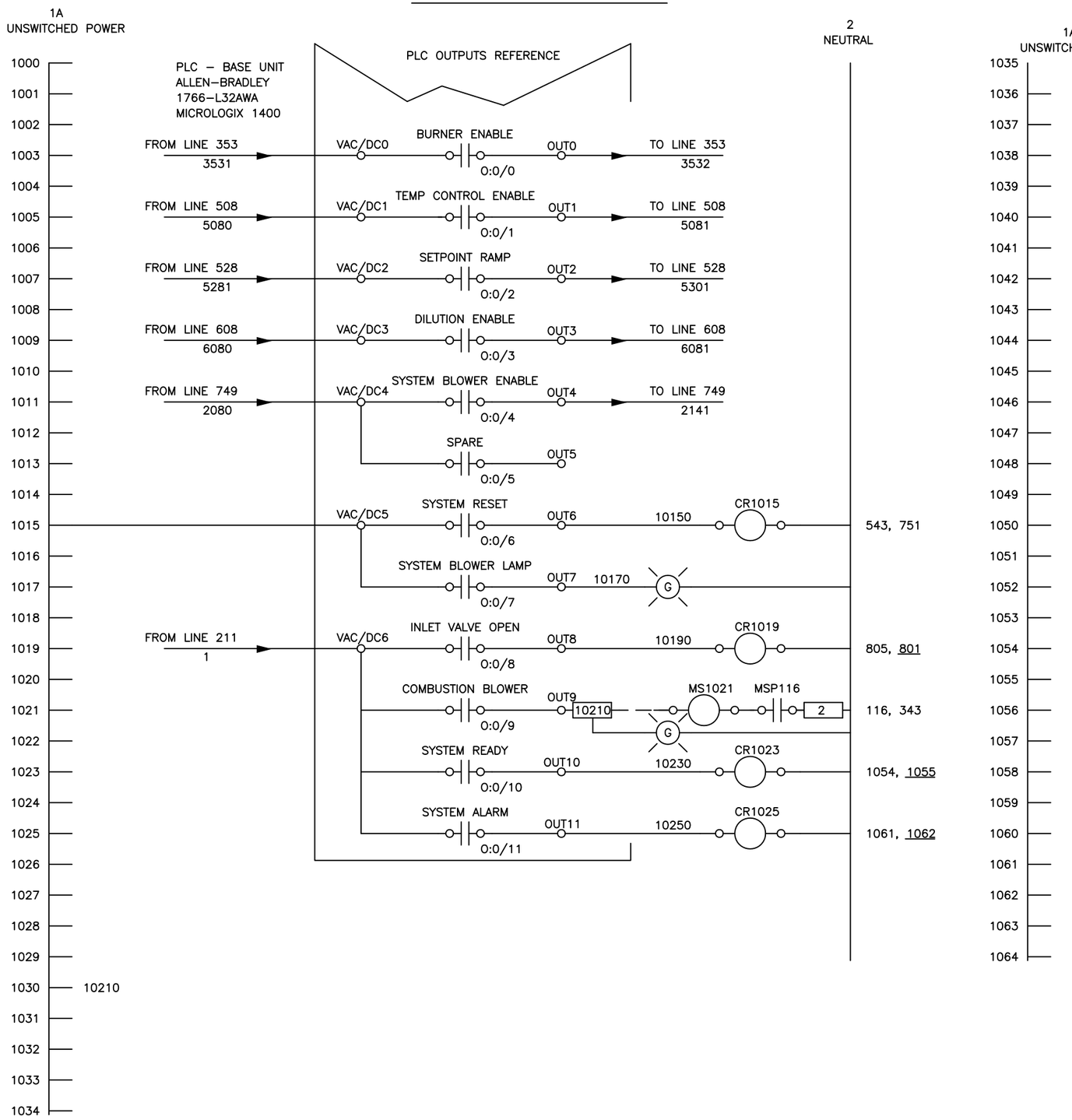

CUSTOMER INTERFACE WIRING
MCP PANEL TO CUSTOMER PANEL

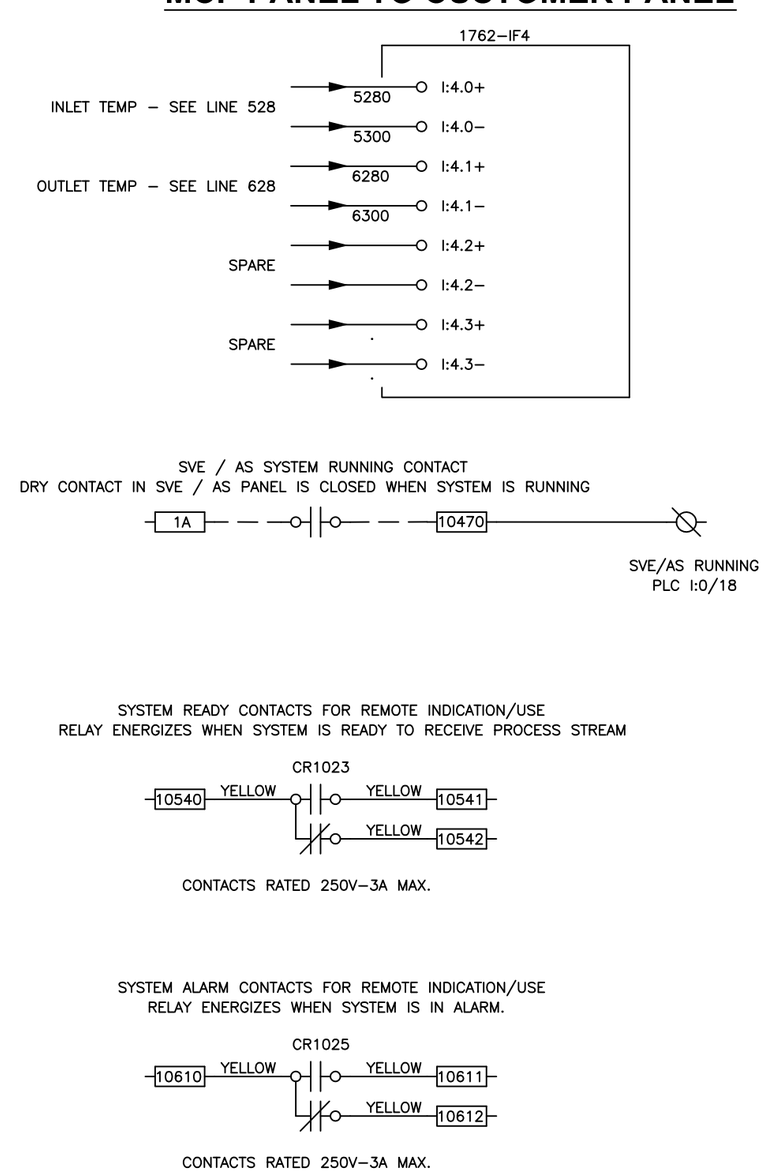

REV	BY	DATE	CHANGE
5	EAM	11/30/11	Global Fab Testing Updates
4	BPH	10/25/11	KF As Built
3	BPH	10/18/11	KF As Built
2	EAM	9/14/11	Moved Motor Overloads Outside Panel
1	BPH	9/2/11	Submittal

INTELLISHARE ENVIRONMENTAL
CLEAN AIR SOLUTIONS

PROJECT ID

TITLE
ELECTRICAL SCHEMATIC
T02000

DRAWING NO. N–11–1198 –410

SCALE NONE

DRAWN EAM DATE 8/7/11

CHECKED DATE

APPROVED DATE

LAST DRAWN BY EAM DATE 8/7/11

CUSTOMER
Solutia
W.G. Krummerich Facility
Sauget, IL

KF NUMBER 11291

PAGE 1 OF 1

LAST PLOTTED BY EAM DATE 8/7/11

MCP PANEL WIRING

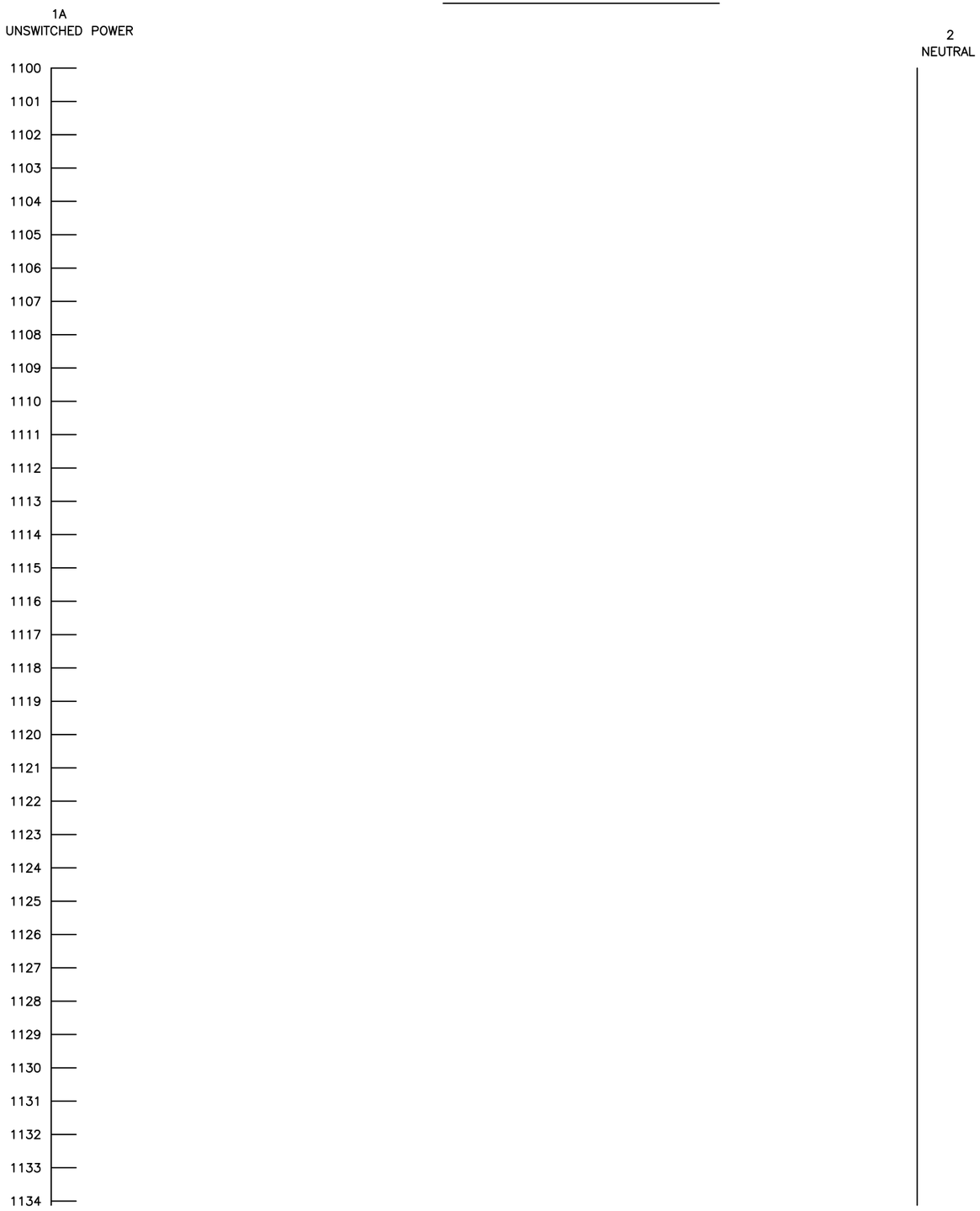

MCP PANEL WIRING

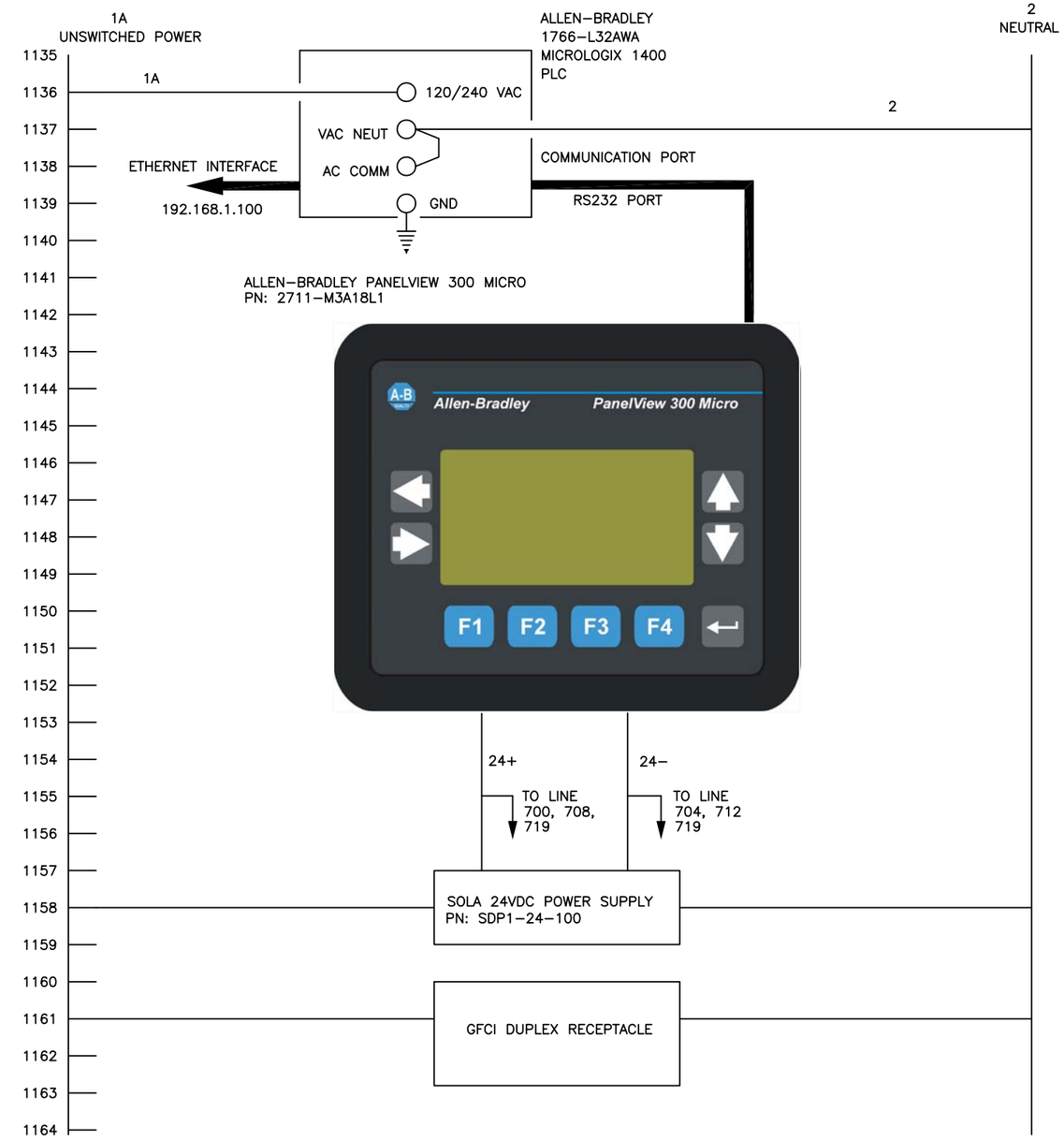

REV	BY	DATE	CHANGE
5	EAM	11/30/11	Global Fab Testing Updates
4	BPH	10/25/11	KF As Built
3	BPH	10/18/11	KF As Built
2	EAM	9/14/11	Moved Motor Overloads Outside Panel
1	BPH	9/2/11	Submittal

INTELLISHARE ENVIRONMENTAL
CLEAN AIR SOLUTIONS

PROJECT ID

TITLE
ELECTRICAL SCHEMATIC
T02000

DRAWING NO. N–11–1198 –411

SCALE NONE

DRAWN EAM DATE 8/7/11

CHECKED DATE

APPROVED DATE

LAST DRAWN BY EAM DATE 8/7/11

CUSTOMER
Solutia
W.G. Krummerich Facility
Sauget, IL

KF NUMBER 11291

PAGE 1 OF 1

LAST PLOTTED BY EAM DATE 8/7/11

MCC PANEL WIRING

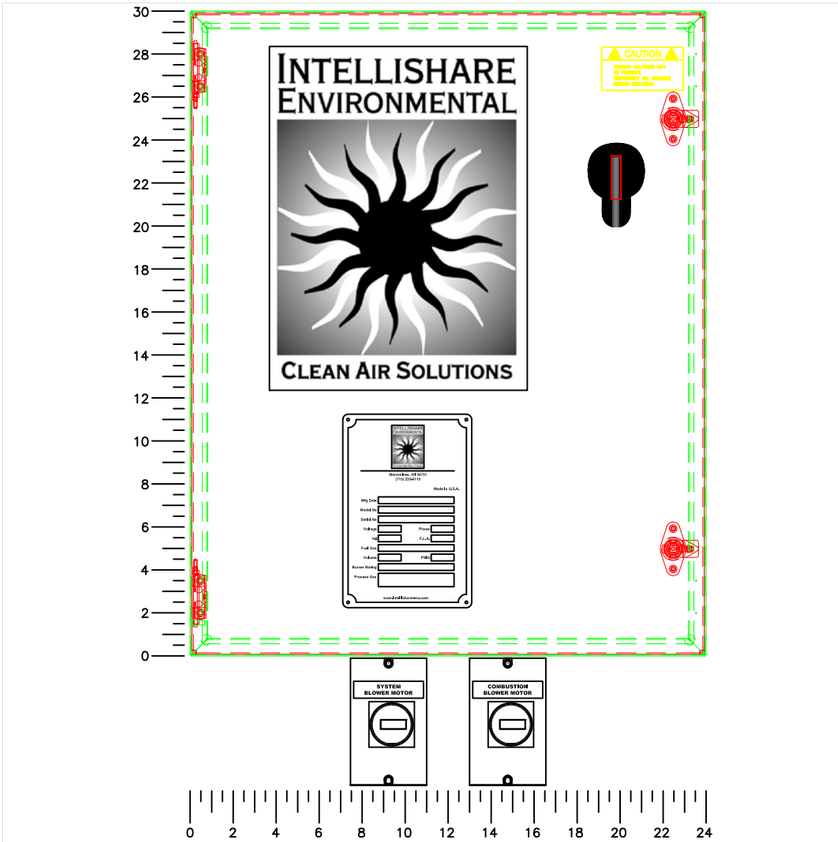

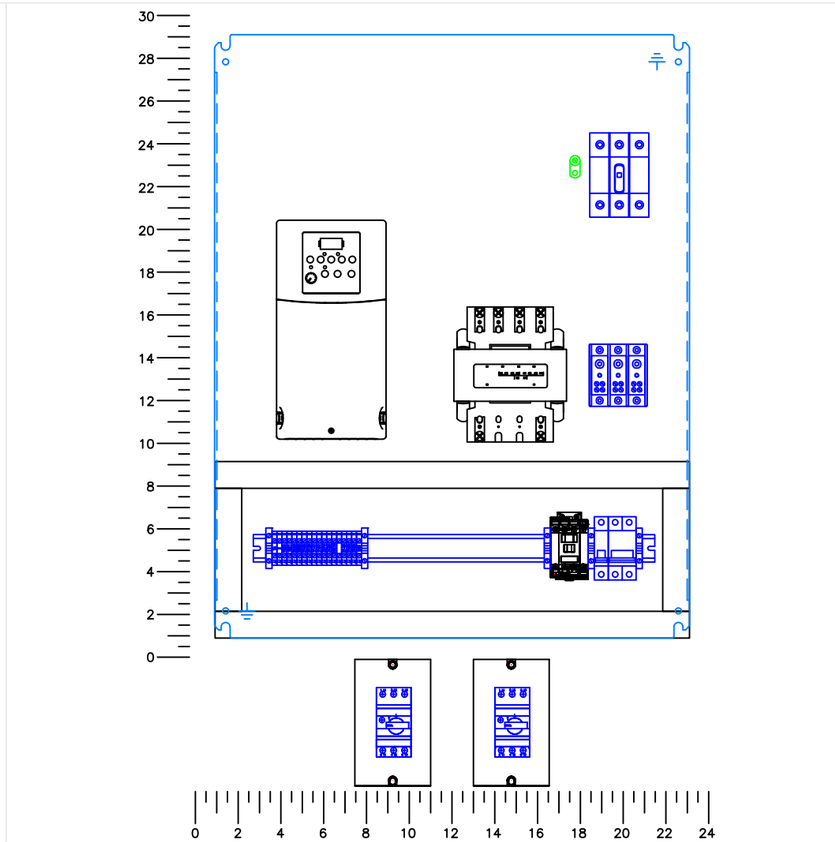

ITEM	QTY.	DESCRIPTION	PART NUMBER	MFG.
1	1	ENCLOSURE – 30" x 24" x 10"	CSD302410SS	HOFFMAN
2	1	SUBPANEL – 30" x 24"	CP3024	HOFFMAN
3				
4	1	CONTROL TRANSFORMER 460/230–115, 500VA	E500	HEVI–DUTY
5	1	CIRCUIT BREAKER 5A, 2P	WMZT2C05	EATON
6	1	CIRCUIT BREAKER 7A, 1P	WMZT1C07	EATON
7	1	DISTRIBUTION BLOCK	16220–3	BUSSMAN
8	6	WIREWAY	F1X3WH6	PANDUIT
	6	WIREWAY COVER	C1WH6	PANDUIT
9	1	CONTACTOR	100–C23D10	A–B
10	1	MOTOR CIRCUIT PROTECTOR	140M–C2E–C16	A–B
	1	MOTOR CIRCUIT PROTECTOR AUX CONTACT	140M–C–AFA10	A–B
11	1	POWERFLEX 400 VFD, 20 HP	22C–D030N103	A–B
12	1	MOTOR CIRCUIT PROTECTOR	140M–F8E–C45	A–B
13	1	MOTOR CIRCUIT PROTECTOR AUX CONTACT	140M–C–AFA10	A–B
14	1	GROUND LUG	L70	CONNECTOR MFG
15	1	CUSTOM DEVICE TAG – WARNING LABEL	TAG–CUS	CUSTOM ENGRAVING
16	13	TERMINAL BLOCK	1492–J3	A–B
	1	TERMINAL END BARRIER	1492–EBJ3	A–B
	5	TERMINAL END STOP	1492–EAJ35	A–B
	6	TERMINAL BLOCK BLUE	1492–J3B	A–B
	2	TERMINAL BLOCK – GROUNDING	1492–JG3	A–B
17	1	35MM DIN RAIL – SHALLOW	173220.05	ENTERLEC
18	1	35MM DIN RAIL – DEEP	101598.26	ENTERLEC
19	1	GROUND LUG	L70	CONNECTOR MFG
20	2	VENT KIT	A–VK64SS	HOFFMAN
21	2	FILTER KIT	A–FLT64	HOFFMAN
22	1	NON–FUSED DISCONNECT	OT63F3	ABB
23	1	NON–FUSED DISCONNECT SHAFT	OXP6X290	ABB
	1	NON–FUSED DISCONNECT HANDLE	OHY65J6	ABB
24	2	OVERLOAD ENCLOSURE	198E–AYTJ2	AB
	2	TAG	TAG–CUS	BOSS

ALL TAGS BLACK WITH WHITE LETTERS

A SYSTEM BLOWER MOTOR (11)

B COMBUSTION BLOWER MOTOR (11)

CAUTION (12)

FOREIGN VOLTAGES MAY BE PRESENT. DISCONNECT ALL SOURCES BEFORE SERVICING.

ENLARGED VIEW OF TERMINAL BLOCKS

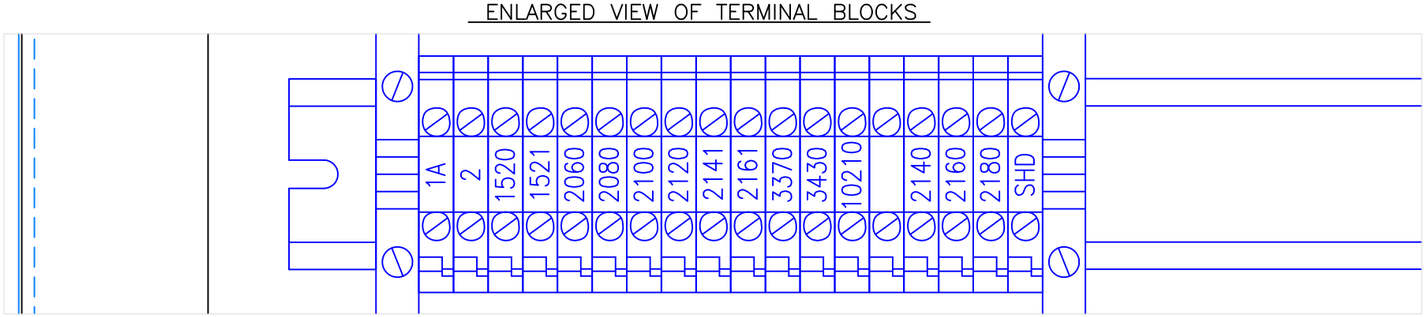

REV	BY	DATE	CHANGE
5	EAM	11/30/11	Global Fab Testing Updates
4	BPH	10/25/11	KF As Built
3	BPH	10/18/11	KF As Built
2	EAM	9/14/11	Moved Motor Overloads Outside Panel
1	BPH	9/2/11	Submittal

INTELLISHARE ENVIRONMENTAL
CLEAN AIR SOLUTIONS

PROJECT ID

TITLE: ELECTRICAL SCHEMATIC T02000

DRAWING NO. N–11–1198 –450

SCALE NONE

DRAWN EAM DATE 8/7/11

CHECKED DATE

APPROVED DATE

LAST DRAWN BY EAM DATE 8/7/11

CUSTOMER: Solutia, W.G. Krummerich Facility, Sauget, IL

KF NUMBER 11291

PAGE 1 OF 1

LAST PLOTTED BY EAM DATE 8/7/11

MCP PANEL WIRING

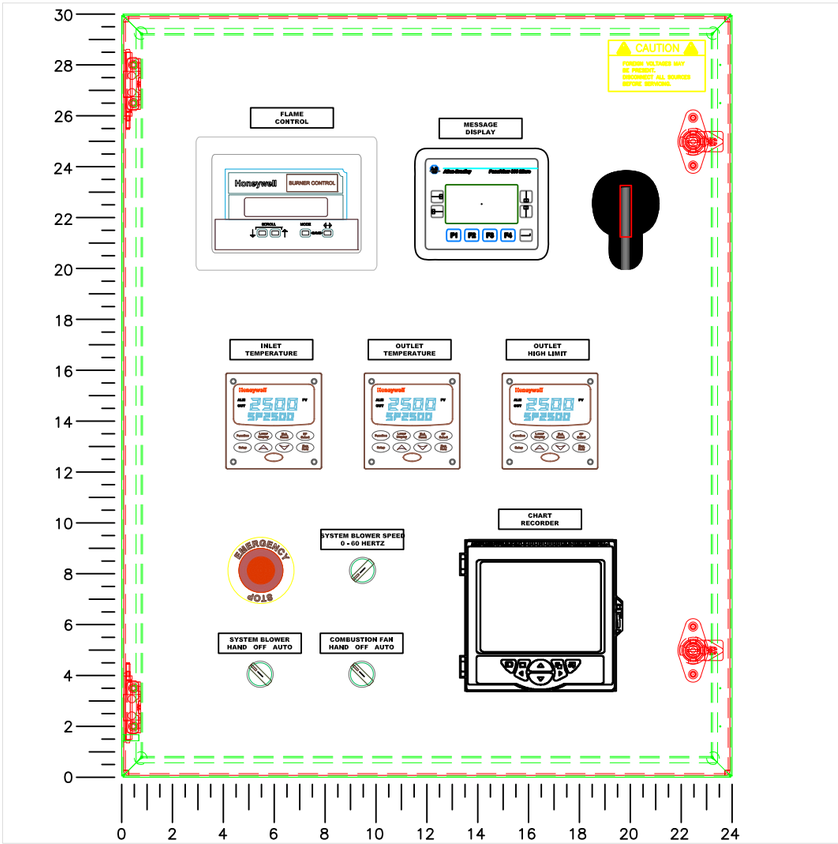

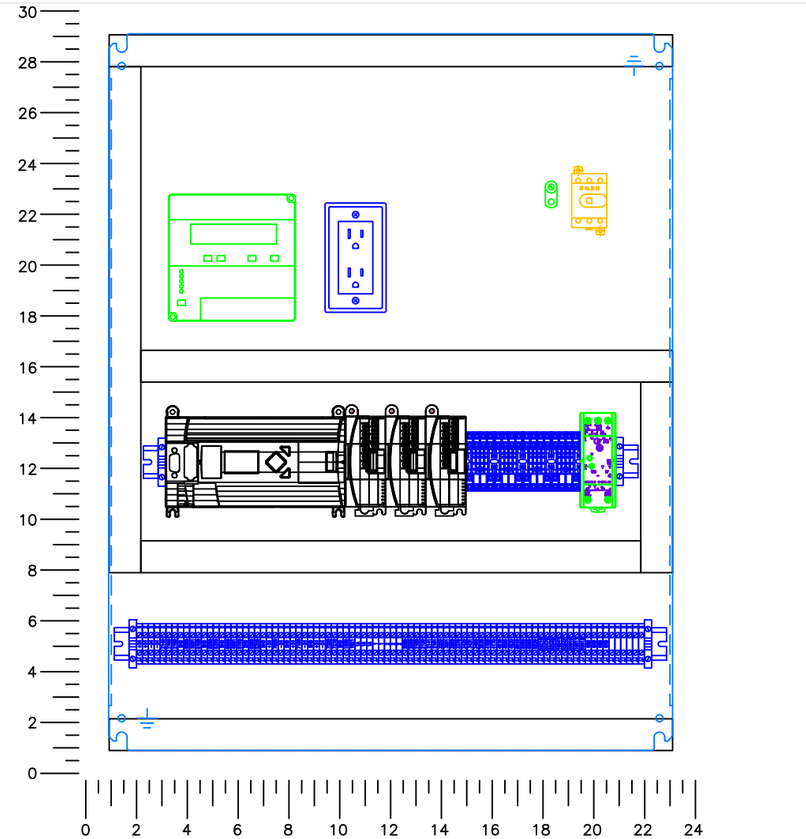

ITEM	QTY.	DESCRIPTION	PART NUMBER	MFG.
1	1	ENCLOSURE – 30" x 24" x 10"	CSD302410SS	HOFFMAN
2	1	SUBPANEL – 30" x 24"	CP3024	HOFFMAN
3				
4	1	DUPLEX RECEPTICLE + COVER GFCI	7599–I	LEVITON
	1	HANDY BOX	58361–1/2	STEEL CITY
5	7	CONTROL RELAY – 4 POLE	RU4S–CA110	IDEC
	7	CONTROL RELAY BASE – 4 POLE	SY4S–05	IDEC
6	5	CUSTOM DEVICE TAG	TAG–CUS	CUSTOM ENGRAVING
7	1	CUSTOM DEVICE TAG – WARNING LABEL	TAG–CUS	CUSTOM ENGRAVING
8	1	PB POT ASSEMBLY	800FP–POT6	A–B
9	6	DIN RAIL END CLAMP	1492–EAJ35	A–B
10	1	35MM DIN RAIL – SHALLOW	173220.05	ENTERLEC
11	1	35MM DIN RAIL – DEEP	101598.26	ENTERLEC
12	1	GROUND LUG	L70	CONNECTOR MFG
13	43	TERMINAL BLOCK	1492–J3	A–B
	1	TERMINAL END BARRIER	1492–EBJ3	A–B
	2	TERMINAL BLOCK JUMPER	1492–CJLJ5–50	A–B
	30	TERMINAL BLOCK BLUE	1492–J3B	A–B
	13	TERMINAL BLOCK – GROUNDING	1492–JG3	A–B
	7	TERMINAL END STOP	1492–EAJ35	A–B
14	1	POWER SUPPLY	PSG60E	EATON
15	1	PANELVIEW 300 MESSAGE DISPLAY	2711–M3A18L1	A–B
16	1	MESSAGE DISPLAY CABLE	1761–CBL–HM02	A–B
17	11	WIREWAY	F1X3WH6	PANDUIT
	11	WIREWAY COVER	C1WH6	PANDUIT
18	1	PLC BASE UNIT	1766–L32AWA	A–B
	1	PLC INPUT MODULE	1762–IA8	A–B
	2	PLC ANALOG INPUT MODULE	1762–IF4	A–B
	1	PLC THERMCOUPLE INPUT MODULE	1762–IT4	A–B
19	1	PB E–STOP OPERATOR (E–STOP)	800FP–MP44	A–B
	1	PB BACKER	800F–ALP	A–B
	1	PB E–STOP LEGEND	800F–15YE112	A–B
	1	PB NC CONTACT BLOCK	800F–X01	A–B
20	1	TEMPERATURE LIMIT – DC2500–EE–1L00–200–10000–E–0–0		HONEYWELL
21	1	TEMPERATURE CONTROLLER – DC2500–CE–1A00–200–00000–00–0		HONEYWELL
22	1	TEMPERATURE CONTROLLER – DC2500–CE–1A00–200–00000–00–0		HONEYWELL
23	1	FLAME SAFEGUARD	RM7895B–1013	HONEYWELL
	1	FLAME SAFEGUARD MOUNTING BASE	Q7800A–1005	HONEYWELL
	1	FLAME STRENGTH AMPLIFIER	R7847A–1033	HONEYWELL
	1	PRE–PURGE TIMER 30 SEC.	ST7800A–1039	HONEYWELL
	1	DISPLAY MODULE	S7800A–1142	HONEYWELL
24	1	PAPERLESS CHART RECORDER	SM503FB/U000000E/STD	ABB
25	1	NON–FUSED DISCONNECT	OT40F3	ABB
	1	NON–FUSED DISCONNECT SHAFT	OXP6X290	ABB
	1	NON–FUSED DISCONNECT HANDLE	OHY65J6	ABB
26	2	PB ILLUMINATED SELECTOR OPERATOR	800FM–LSL33	A–B
	2	PB BACKER	800F–ALP	A–B
	2	PB LED	800F–N5G	A–B
	4	PB NO CONTACT BLOCK	800F–X10	A–B

ALL TAGS BLACK WITH WHITE LETTERS

A FLAME CONTROL (11)

B MESSAGE DISPLAY (11)

C SYSTEM BLOWER HAND OFF AUTO (11)

D COMBUSTION BLOWER HAND OFF AUTO (11)

E INLET TEMPERATURE (11)

F OUTLET TEMPERATURE (11)

G OUTLET HIGH LIMIT (11)

H SYSTEM BLOWER SPEED 0 – 60 HERTZ (11)

J CHART RECORDER (11)

CAUTION (12)

FOREIGN VOLTAGES MAY BE PRESENT. DISCONNECT ALL SOURCES BEFORE SERVICING.

ENLARGED VIEW OF TERMINAL BLOCKS

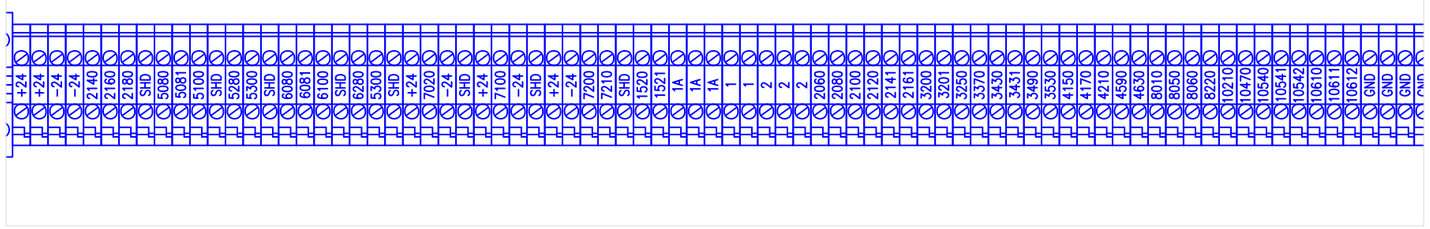

REV	BY	DATE	CHANGE
5	EAM	11/30/11	Global Fab Testing Updates
4	BPH	10/25/11	KF As Built
3	BPH	10/18/11	KF As Built
2	EAM	9/14/11	Moved Motor Overloads Outside Panel
1	BPH	9/2/11	Submittal

INTELLISHARE ENVIRONMENTAL
CLEAN AIR SOLUTIONS

PROJECT ID

TITLE: ELECTRICAL SCHEMATIC T02000

DRAWING NO. N–11–1198 –451

SCALE: NONE

DRAWN: EAM DATE: 8/7/11

CHECKED: DATE:

APPROVED: DATE:

CUSTOMER: Solutia, W.G. Krummerich Facility, Sauget, IL

LAST DRAWN BY: EAM DATE: 8/7/11

KF NUMBER: 11291

PAGE 1 OF 1

LAST PLOTTED BY EAM DATE 8/7/11

Wiring Instructions/Information

Field Connection	Terminal Strip	Function Text
Y	1	Low Fuel Pressure SW – Common
Y	3200	Low Fuel Pressure SW – Return
Y	3200	High Fuel Pressure SW – Common
Y	3201	High Fuel Pressure SW – Return
O	2301	L.E.L. SW – Common (Optional)
O	3250	L.E.L. SW – Return (Optional)
Y	2100	System Air SW – Common
Y	2120	System Air SW – Return
O	3430	Combustion Air Pressure SW – Common
O	3431	Combustion Air Pressure SW – Return
Y	3431	High DF Pressure SW – Common
Y	3490	High DF Pressure SW – Return
Y	4150	Ignition Transformer – Black Wire
Y	2	Ignition Transformer – White Wire
Y	4170	Pilot Solenoid Valves – Red Wire
Y	2	Pilot Solenoid Valves – Red Wire
Y	2	Blocking & Main Gas Valve Actuator Terminal #1
Y	4210	Blocking & Main Gas Valve Actuator Terminal #2
Y	4210	Blocking & Main Gas Valve Actuator Terminal #3
Y	1	Gas Valve SW – Common – Terminal #3
Y	4590	Gas Valve SW – Return – Terminal #1
Y	4630	Gas Valve SW – Return – Terminal #2
Y	3490	Burner Valve Actuator SW – Common
Y	3530	Burner Valve Actuator SW – Return
Y	1	Dilution Valve Actuator SW – Common
Y	6140	Dilution Valve Actuator SW – Return
Y	1A	Burner Valve Actuator Main Power – L1
Y	2	Burner Valve Actuator Main Power – L2
Y	1A	Dilution Valve Actuator Main Power – L1
Y	2	Dilution Valve Actuator Main Power – L2
Y	1A	Inlet Valve Closed Limit Switch – Common
Y	8060	Inlet Valve Closed Limit Switch – Return
Y	8050	Inlet Valve Open
Y	8010	Inlet Valve Close
Y	2	Inlet Valve Common
Y	1A	Inlet Valve Hot
Y	1A	Heat Exchange Exit High Temp – Feed
Y	8220	Heat Exchange Exit High Temp – Return

Terminal Block TB1 (Control Voltage)

Terminal block "TB1" represents all Control Voltage terminal connections. The "Field Conn." column is marked with an "Y" to identify required field connections, and an "O" for optional connections.

All wiring shall be RED 14 guage type THHN and must be isolated from low voltage wiring.

Warning: Follow appropriate guidlines when wiring to classified environment.

Field Connection	Terminal Strip	Function Text
Y	5081	Burner Valve Actuator – Analog Command (–)
Y	5100	Burner Valve Actuator – Analog Command (+)
Y	6081	Dilution Valve Actuator – Analog Command (–)
Y	6100	Dilution Valve Actuator – Analog Command (+)
Y	+24	Inlet Air Flow – Input
Y	7020	Inlet Air Flow – Output
Y	+24	Stack Air Flow – Input
Y	7100	Stack Air Flow – Output
Y	+24	LEL Power (+)
Y	–24	LEL Power (–)
Y	7210	LEL Output (+)
Y	7200	LEL Output (–)

Terminal Block TB2 (Low Voltage)

Terminal block "TB2" represents all Low Voltage terminal connections. The "Field Conn." column is marked with an "Y" to identify required field connections, and an "O" for optional connections.

All wiring shall be 18 AWG 3 conductor shielded belden cable or equivilent and must be isolated from high voltage wiring.

Warning: Follow appropriate guidlines when wiring to classified environment.

INCOMING POWER - 460V, 3 Phase

Incoming power shall be wired to the Fuse Block provided, see schematic line #101.
Wire must be sized to meet NEC & Local code requirements.

MOTOR CONNECTIONS

All field wiring for motors shall be black in color and sized to meet local and NEC requirements.

Connections are to be made directly from motor to overload block as shown on page 401 of the schematic.

All motor ground connections are to be connected to ground bar on panel.

Always isolate from any low voltage wiring.

The motors to be wired are shown below:

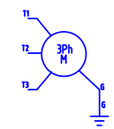

MTR	VOLTS	AMPS	WIRE
1M	460V	24	10AWG
2M	460V	12	14AWG
3M			

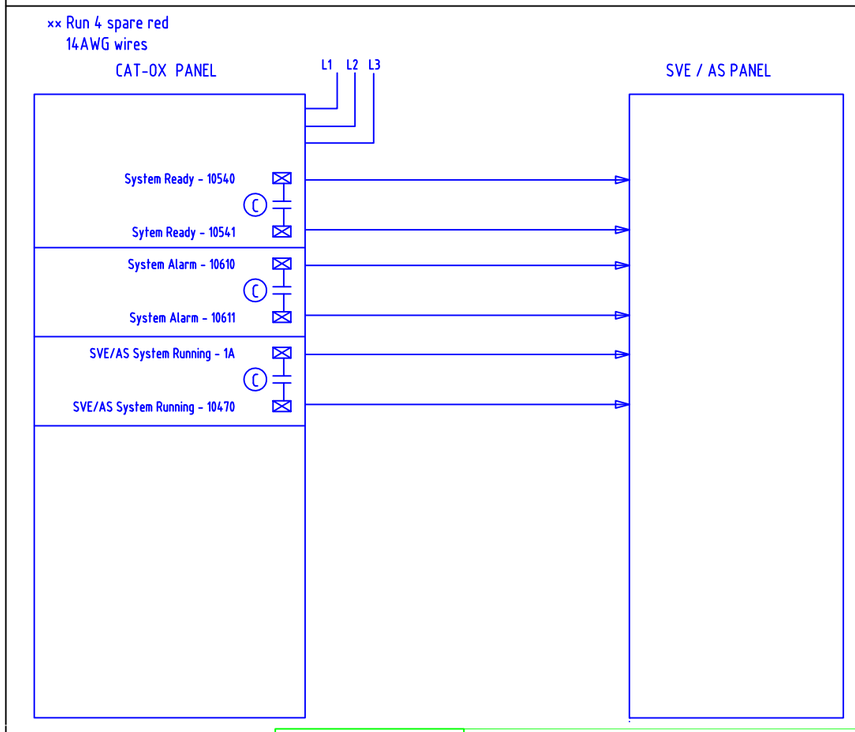

REV	BY	DATE	CHANGE
5	EAM	11/30/11	Global Fab Testing Updates
4	BPH	10/25/11	KF As Built
3	BPH	10/18/11	KF As Built
2	EAM	9/14/11	Moved Motor Overloads Outside Panel
1	BPH	9/2/11	Submittal

INTELLISHARE ENVIRONMENTAL
CLEAN AIR SOLUTIONS

PROJECT ID

TITLE: ELECTRICAL SCHEMATIC
T02000

DRAWING NO. N–11–1198 –460

SCALE NONE

DRAWN EAM DATE 8/7/11

CHECKED DATE

APPROVED DATE

CUSTOMER
Solutia
W.G. Krummerich Facility
Sauget, IL

LAST DRAWN BY EAM DATE 8/7/11

KF NUMBER 11291

PAGE 1 OF 1

LAST PLOTTED BY EAM DATE 8/7/11

MCC PANEL WIRING

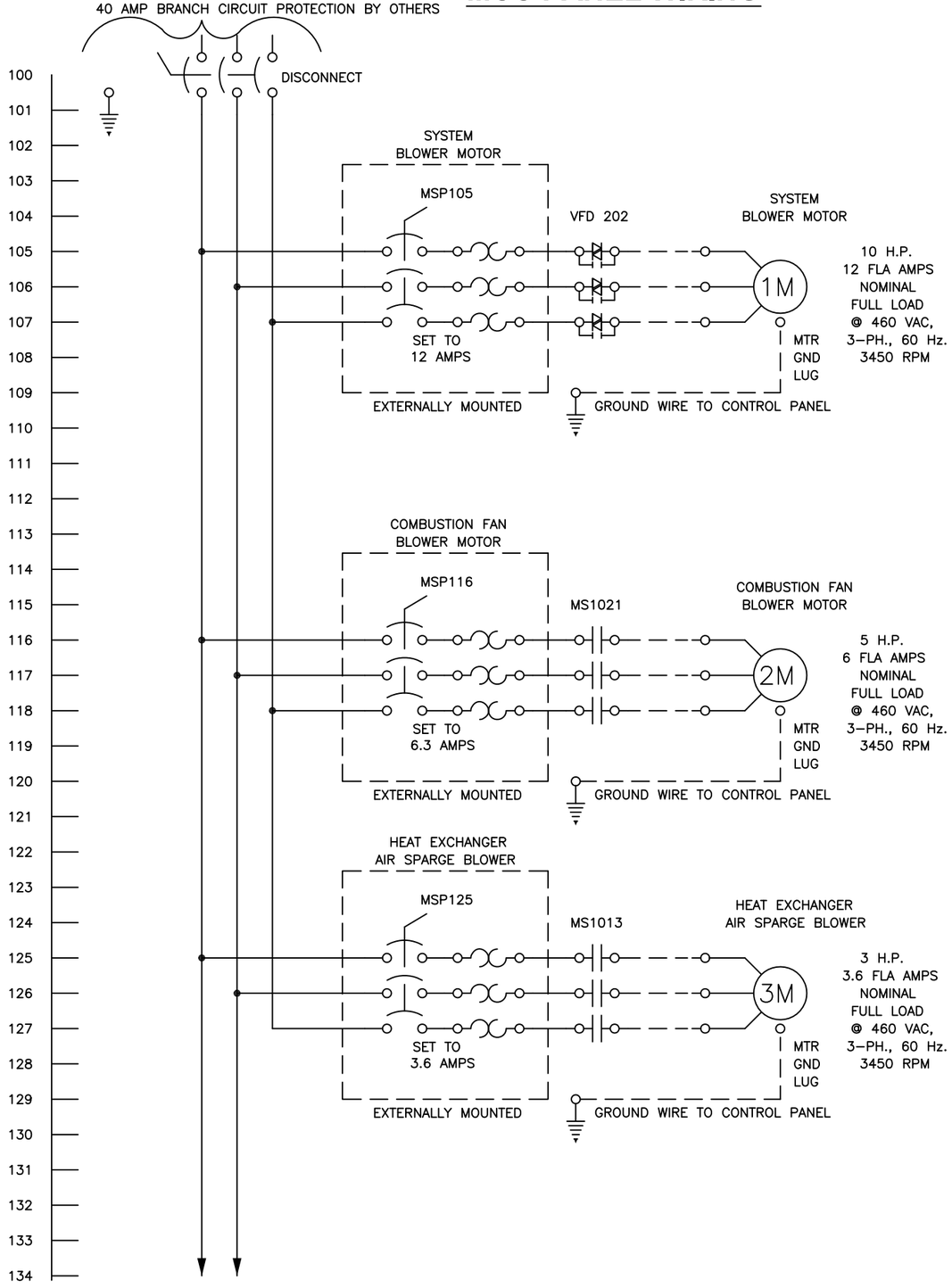

MCC PANEL WIRING

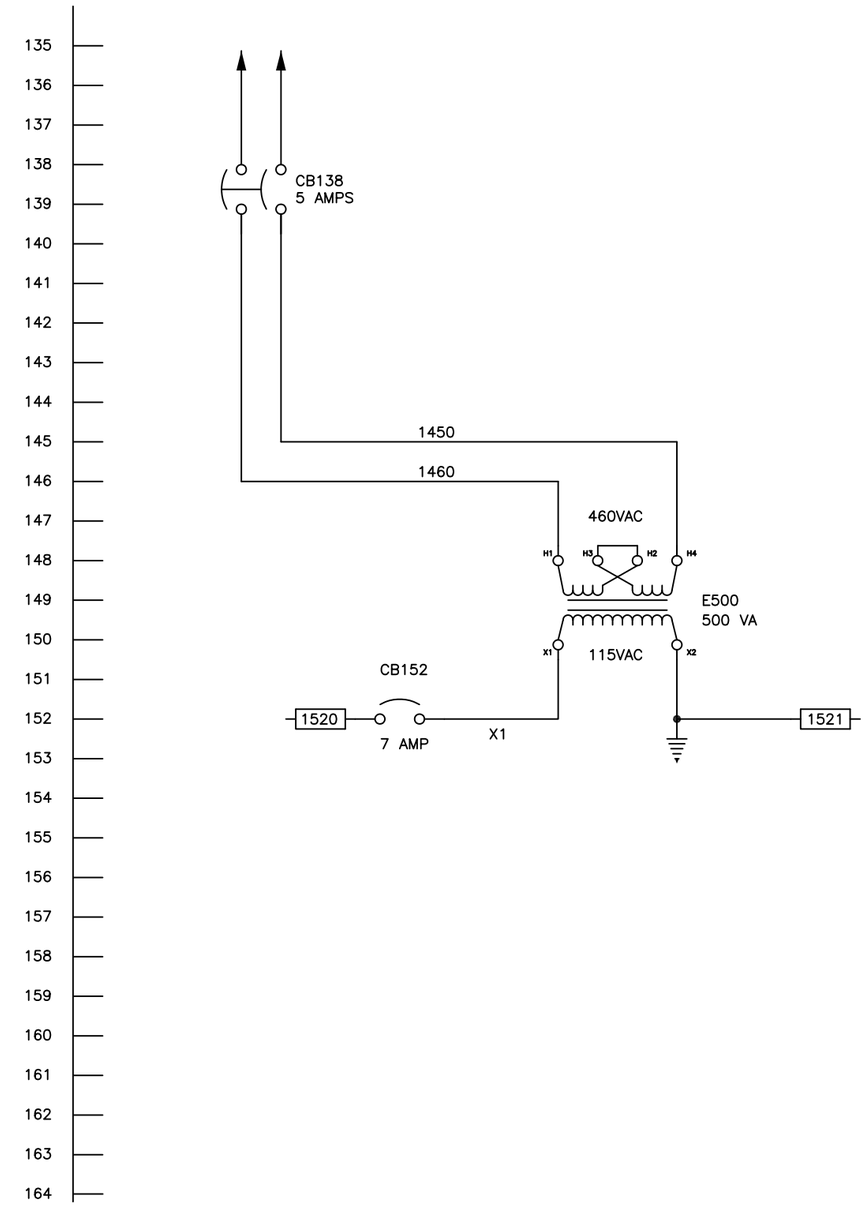

REV	BY	DATE	CHANGE
5	EAM	12/1/	Global Fab Updates
4	BPH	10/25/11	KF As Built
3	BPH	10/18/11	KF As Built
2	EAM	9/14/11	Moved Motor Overloads Outside Panel
1	BPH	9/2/11	Submittal

INTELLISHARE ENVIRONMENTAL
CLEAN AIR SOLUTIONS

PROJECT ID

TITLE
ELECTRICAL SCHEMATIC
CT01000

DRAWING NO. N-11-1199-401

SCALE NONE

DRAWN EAM DATE 8/7/11

CHECKED DATE

APPROVED DATE

CUSTOMER
Solutia
W.G. Krummerich Facility
Sauget, IL

LAST DRAWN BY EAM DATE 8/7/11

KF NUMBER 11291

PAGE 1 OF 1

LAST PLOTTED BY EAM DATE 8/7/11

MCC PANEL WIRING

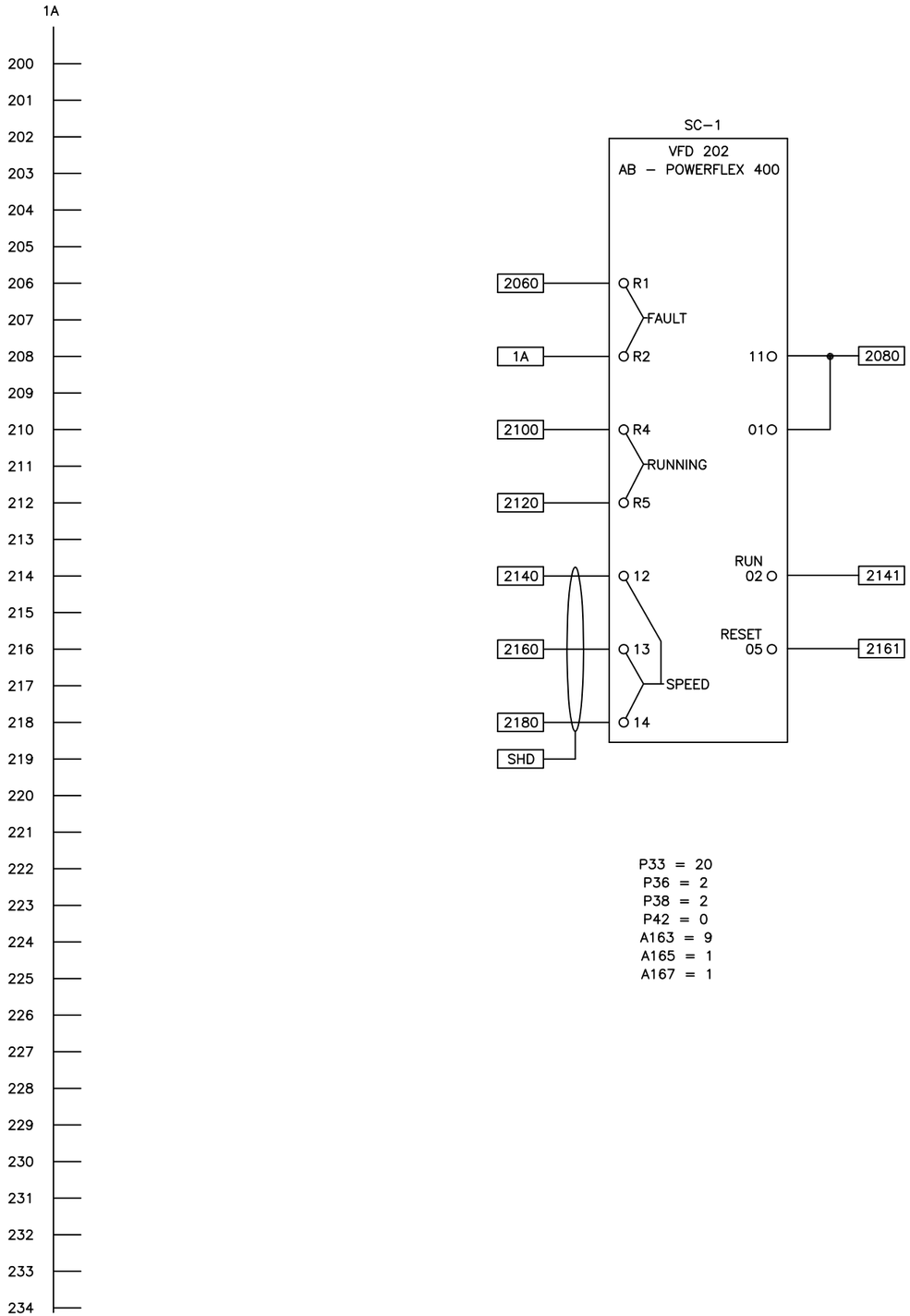

P33 = 20
P36 = 2
P38 = 2
P42 = 0
A163 = 9
A165 = 1
A167 = 1

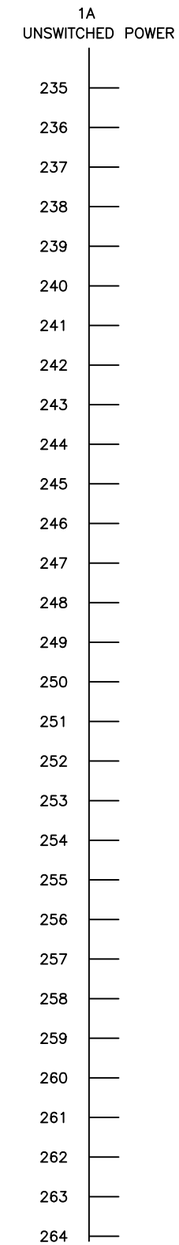

MCC PANEL WIRING

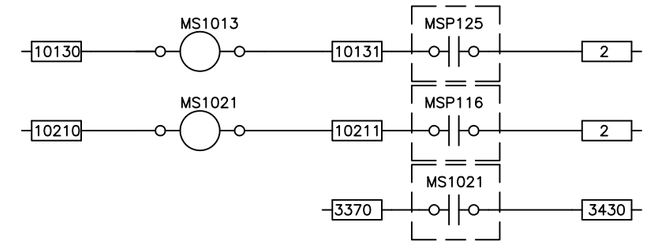

REV	BY	DATE	CHANGE
5	EAM	12/1/	Global Fab Updates
4	BPH	10/25/11	KF As Built
3	BPH	10/18/11	KF As Built
2	EAM	9/14/11	Moved Motor Overloads Outside Panel
1	BPH	9/2/11	Submittal

INTELLISHARE ENVIRONMENTAL
CLEAN AIR SOLUTIONS

PROJECT ID

TITLE
ELECTRICAL SCHEMATIC
CT01000

DRAWING NO. N–11–1199 –402

SCALE NONE

DRAWN EAM DATE 8/7/11
CHECKED DATE
APPROVED DATE

CUSTOMER
Solutia
W.G. Krummerich Facility
Sauget, IL

LAST DRAWN BY EAM DATE 8/7/11
KF NUMBER 11291
PAGE 1 OF 1

LAST PLOTTED BY EAM DATE 8/7/11

MCP PANEL WIRING

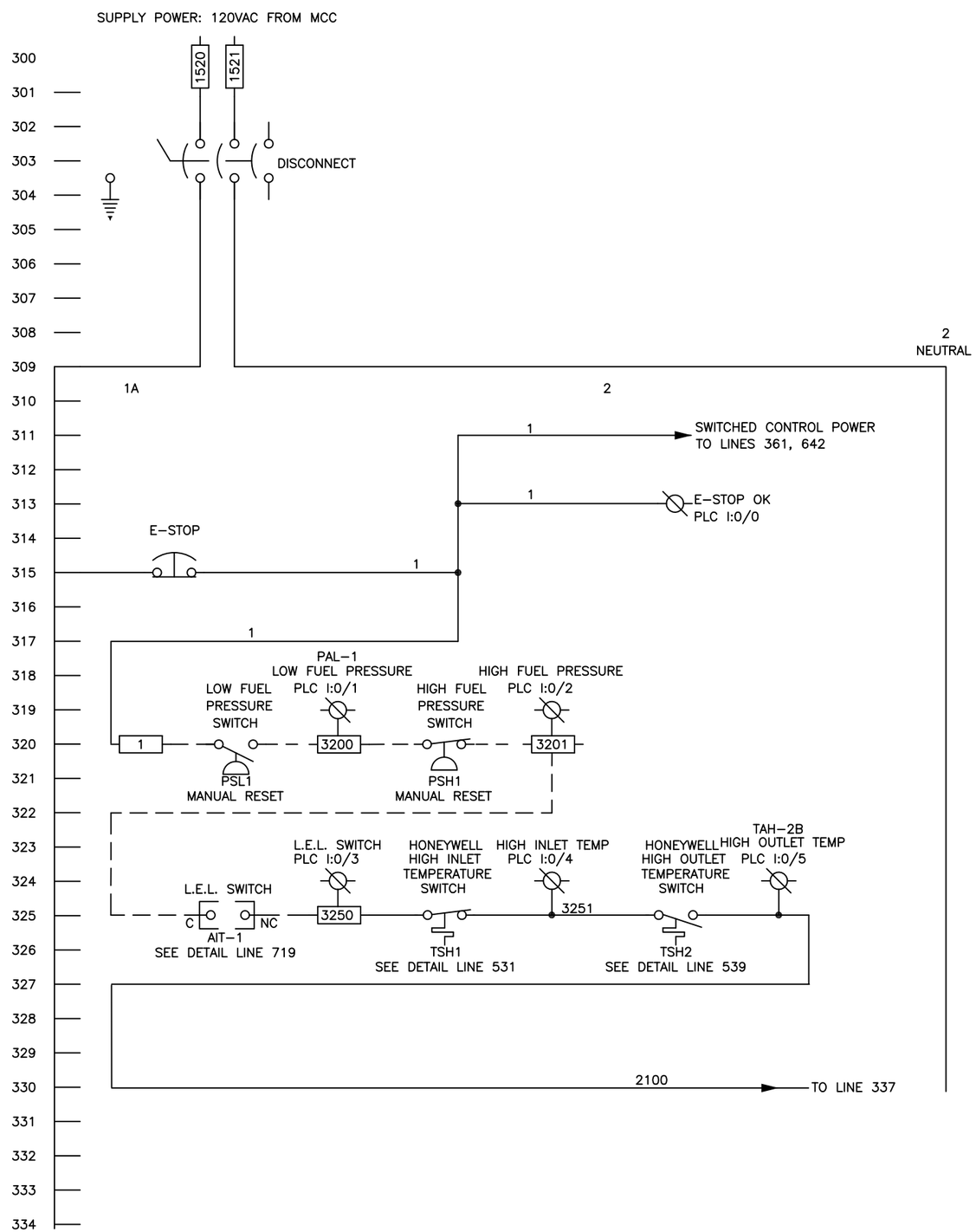

MCP PANEL WIRING

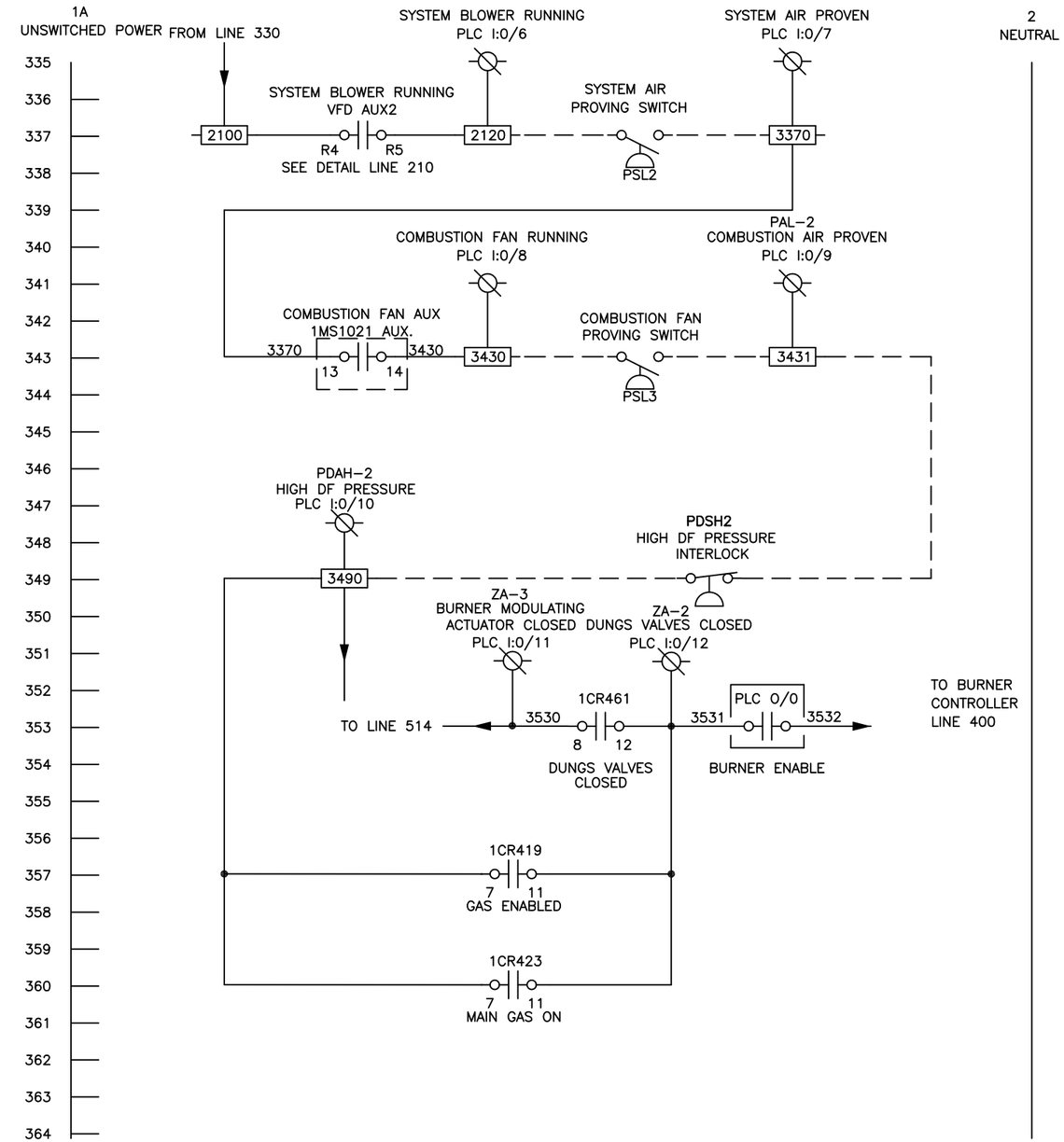

REV	BY	DATE	CHANGE
5	EAM	12/1/	Global Fab Updates
4	BPH	10/25/11	KF As Built
3	BPH	10/18/11	KF As Built
2	EAM	9/14/11	Moved Motor Overloads Outside Panel
1	BPH	9/2/11	Submittal

INTELLISHARE ENVIRONMENTAL
CLEAN AIR SOLUTIONS

PROJECT ID

TITLE
ELECTRICAL SCHEMATIC
CT01000

DRAWING NO. N-11-1199-403

SCALE NONE

DRAWN EAM DATE 8/7/11

CHECKED DATE

APPROVED DATE

CUSTOMER
Solutia
W.G. Krummerich Facility
Sauget, IL

LAST DRAWN BY EAM DATE 8/7/11

KF NUMBER 11291

PAGE 1 OF 1

LAST PLOTTED BY EAM DATE 8/7/11

MCP PANEL WIRING

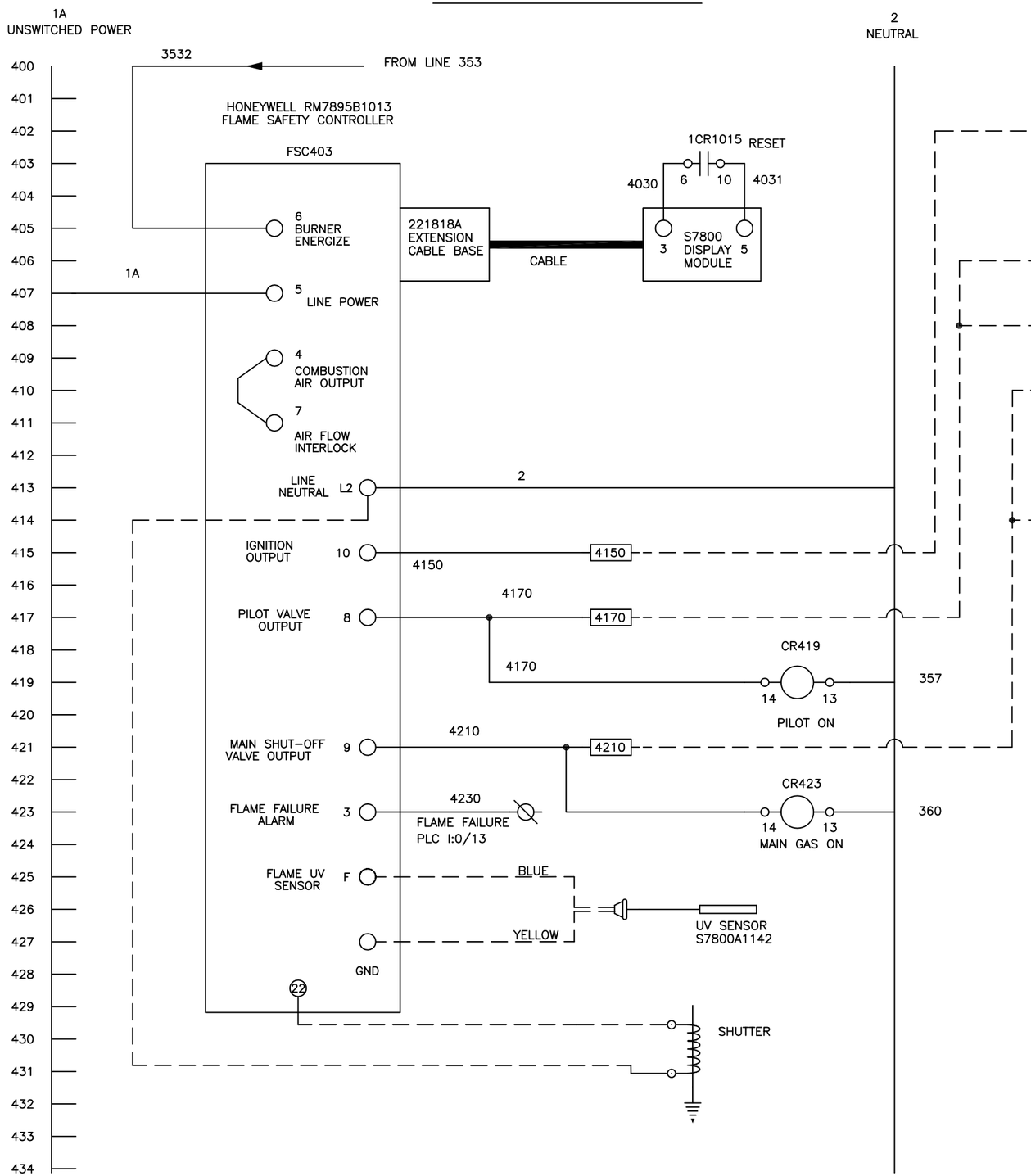

MCP PANEL WIRING

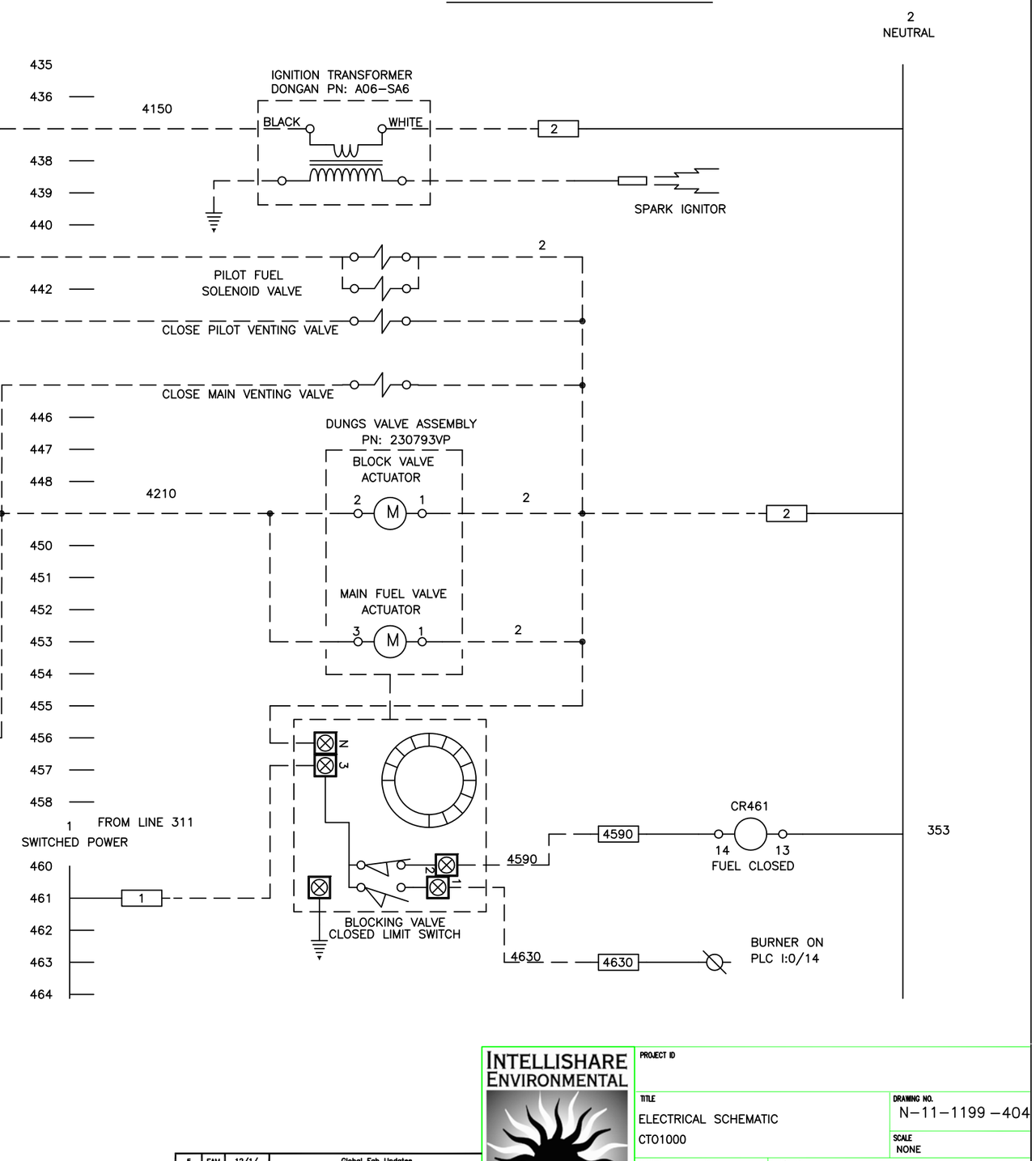

REV	BY	DATE	CHANGE
5	EAM	12/1/	Global Fab Updates
4	BPH	10/25/11	KF As Built
3	BPH	10/18/11	KF As Built
2	EAM	9/14/11	Moved Motor Overloads Outside Panel
1	BPH	9/2/11	Submittal

INTELLISHARE ENVIRONMENTAL
CLEAN AIR SOLUTIONS

PROJECT ID

TITLE
ELECTRICAL SCHEMATIC
CTO1000

DRAWING NO. N-11-1199-404

SCALE NONE

DRAWN EAM DATE 8/7/11

CHECKED DATE

APPROVED DATE

LAST DRAWN BY EAM DATE 8/7/11

CUSTOMER
Solutia
W.G. Krummerich Facility
Sauget, IL

KF NUMBER 11291

PAGE 1 OF 1

LAST PLOTTED BY EAM DATE 8/7/11

MCP PANEL WIRING

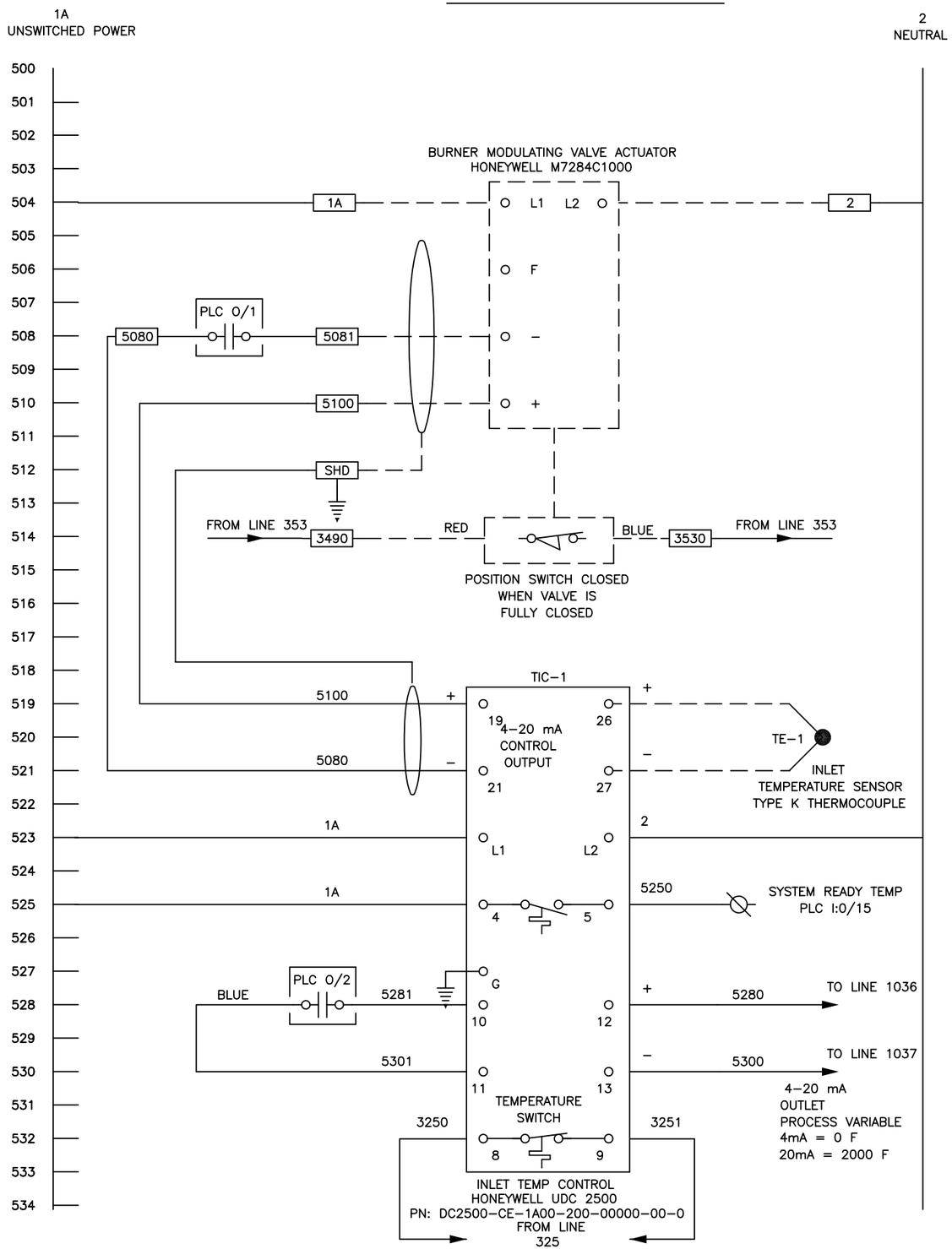

MCP PANEL WIRING

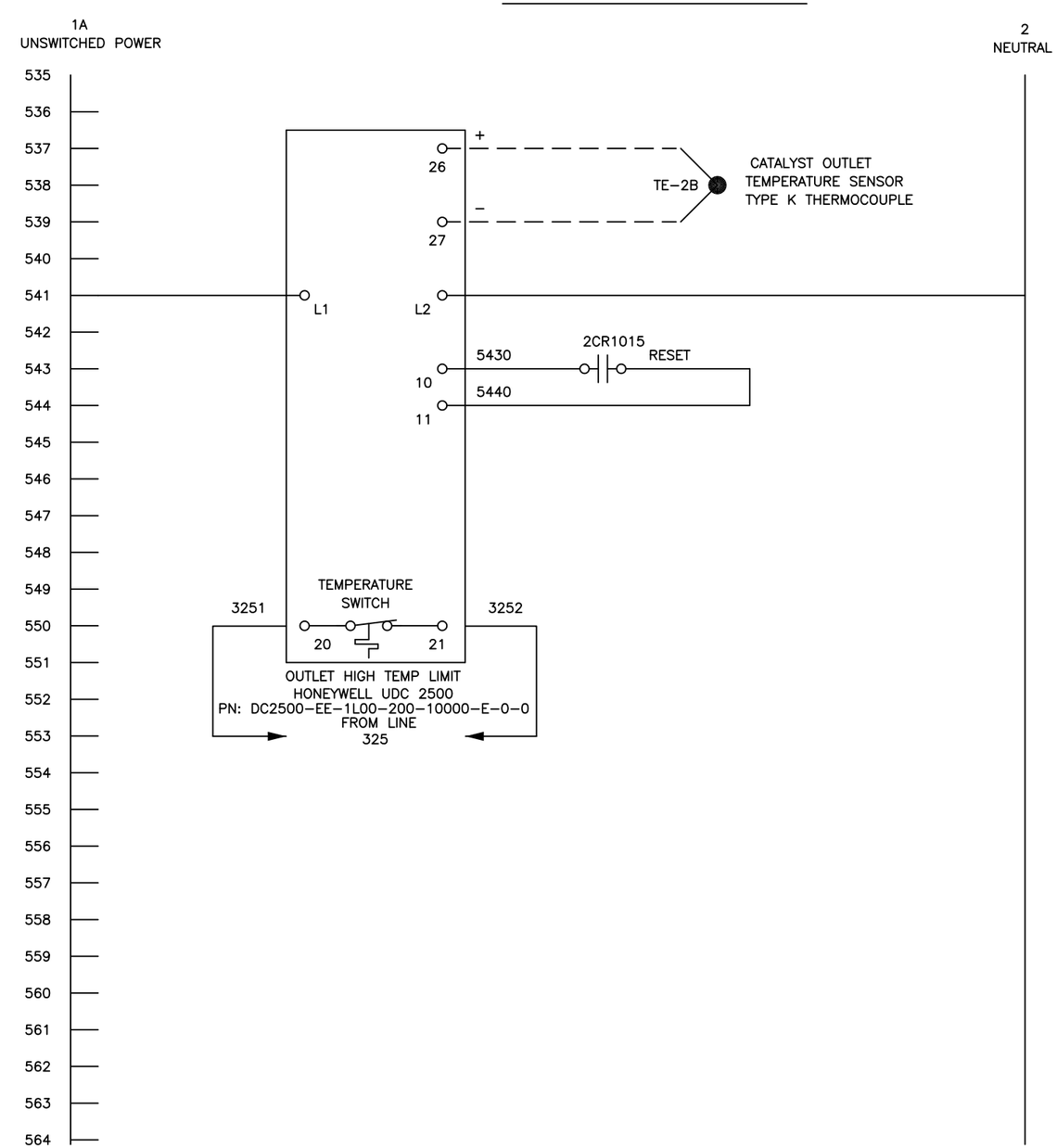

REV	BY	DATE	CHANGE
5	EAM	12/1/	Global Fab Updates
4	BPH	10/25/11	KF As Built
3	BPH	10/18/11	KF As Built
2	EAM	9/14/11	Moved Motor Overloads Outside Panel
1	BPH	9/2/11	Submittal

INTELLISHARE ENVIRONMENTAL
CLEAN AIR SOLUTIONS

PROJECT ID

TITLE
ELECTRICAL SCHEMATIC
CTO1000

DRAWING NO. N–11–1199 –405

SCALE NONE

DRAWN EAM DATE 8/7/11
CHECKED DATE
APPROVED DATE
LAST DRAWN BY EAM DATE 8/7/11

CUSTOMER
Solutia
W.G. Krummerich Facility
Sauget, IL

KF NUMBER 11291

PAGE 1 OF 1

LAST PLOTTED BY EAM DATE 8/7/11

MCP PANEL WIRING

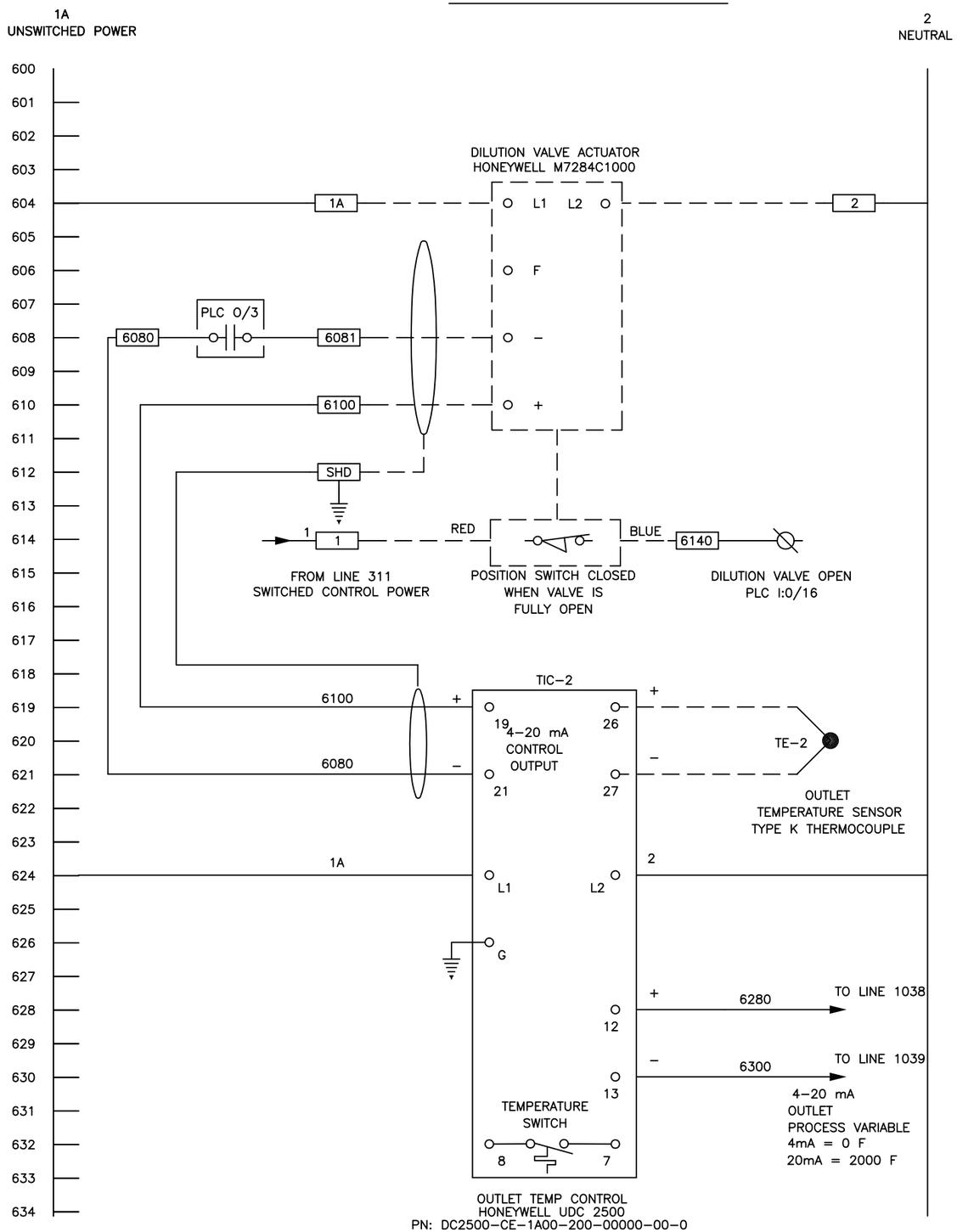

MCP PANEL WIRING

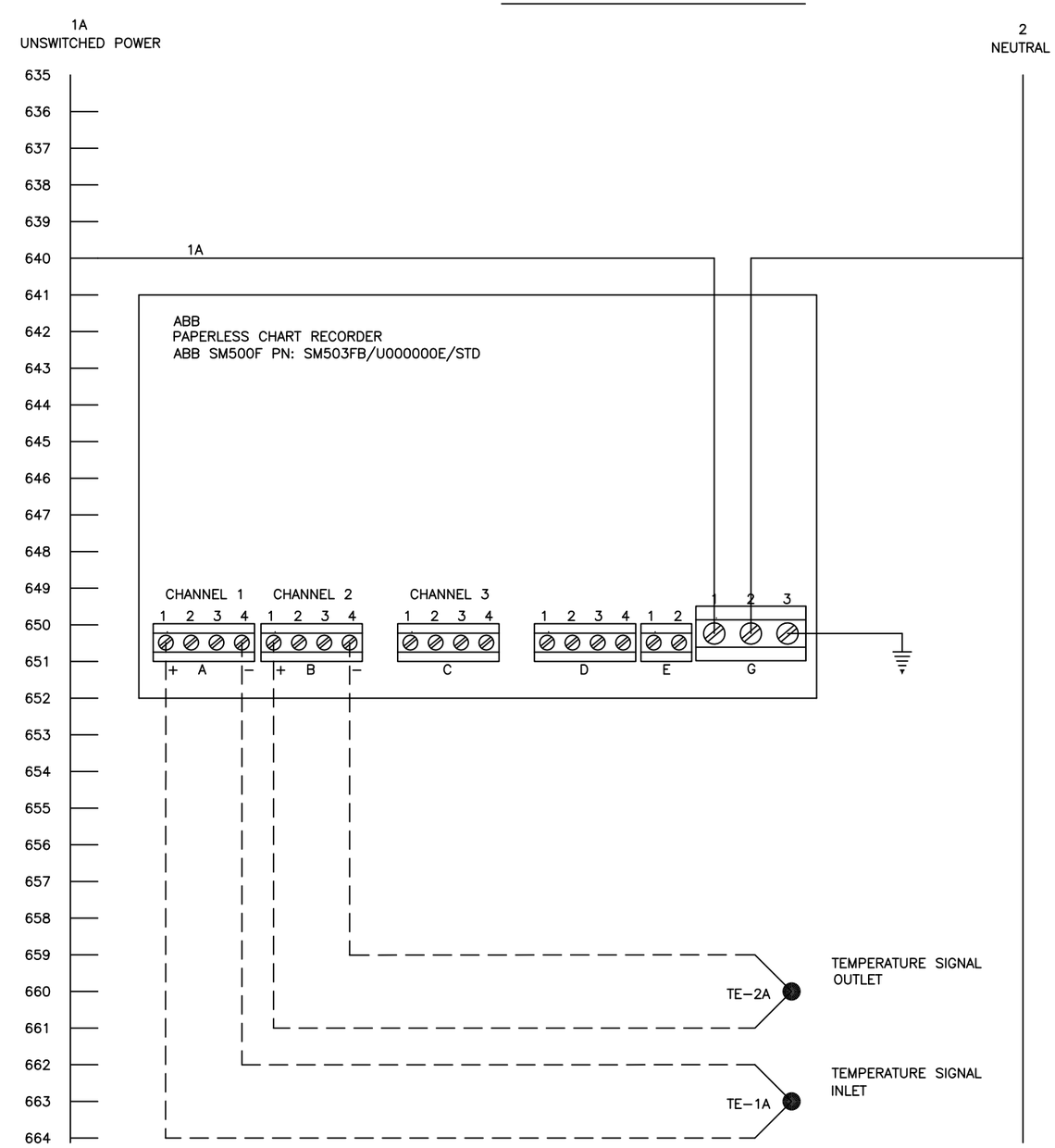

REV	BY	DATE	CHANGE
5	EAM	12/1/	Global Fab Updates
4	BPH	10/25/11	KF As Built
3	BPH	10/18/11	KF As Built
2	EAM	9/14/11	Moved Motor Overloads Outside Panel
1	BPH	9/2/11	Submittal

INTELLISHARE ENVIRONMENTAL
CLEAN AIR SOLUTIONS

PROJECT ID

TITLE
ELECTRICAL SCHEMATIC
CTO1000

DRAWING NO. N–11–1199 –406

SCALE NONE

DRAWN EAM DATE 8/7/11

CHECKED DATE

APPROVED DATE

LAST DRAWN BY EAM DATE 8/7/11

CUSTOMER
Solutia
W.G. Krummerich Facility
Sauget, IL

KF NUMBER 11291

PAGE 1 OF 1

LAST PLOTTED BY EAM DATE 8/7/11

MCP PANEL WIRING

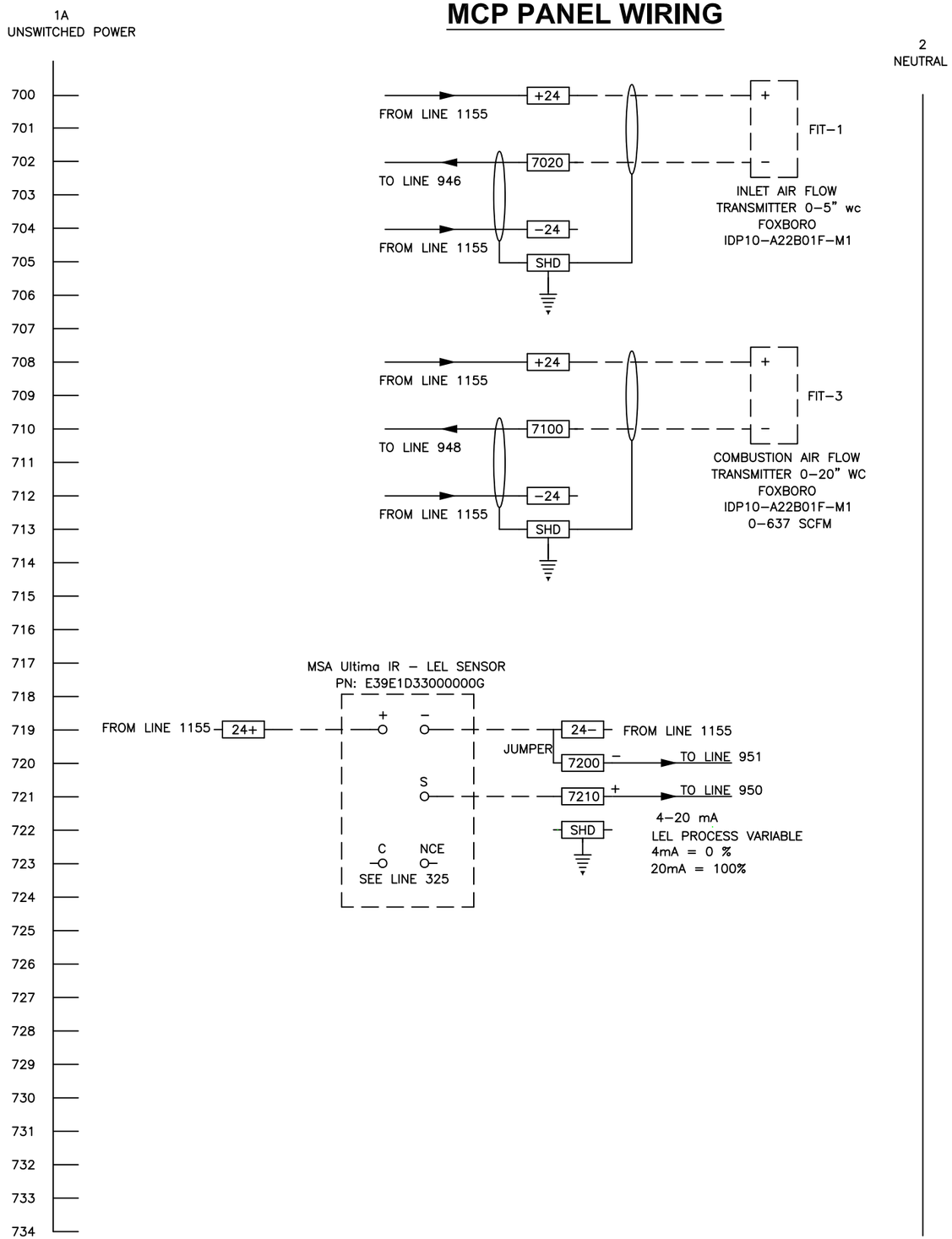

MCP PANEL WIRING

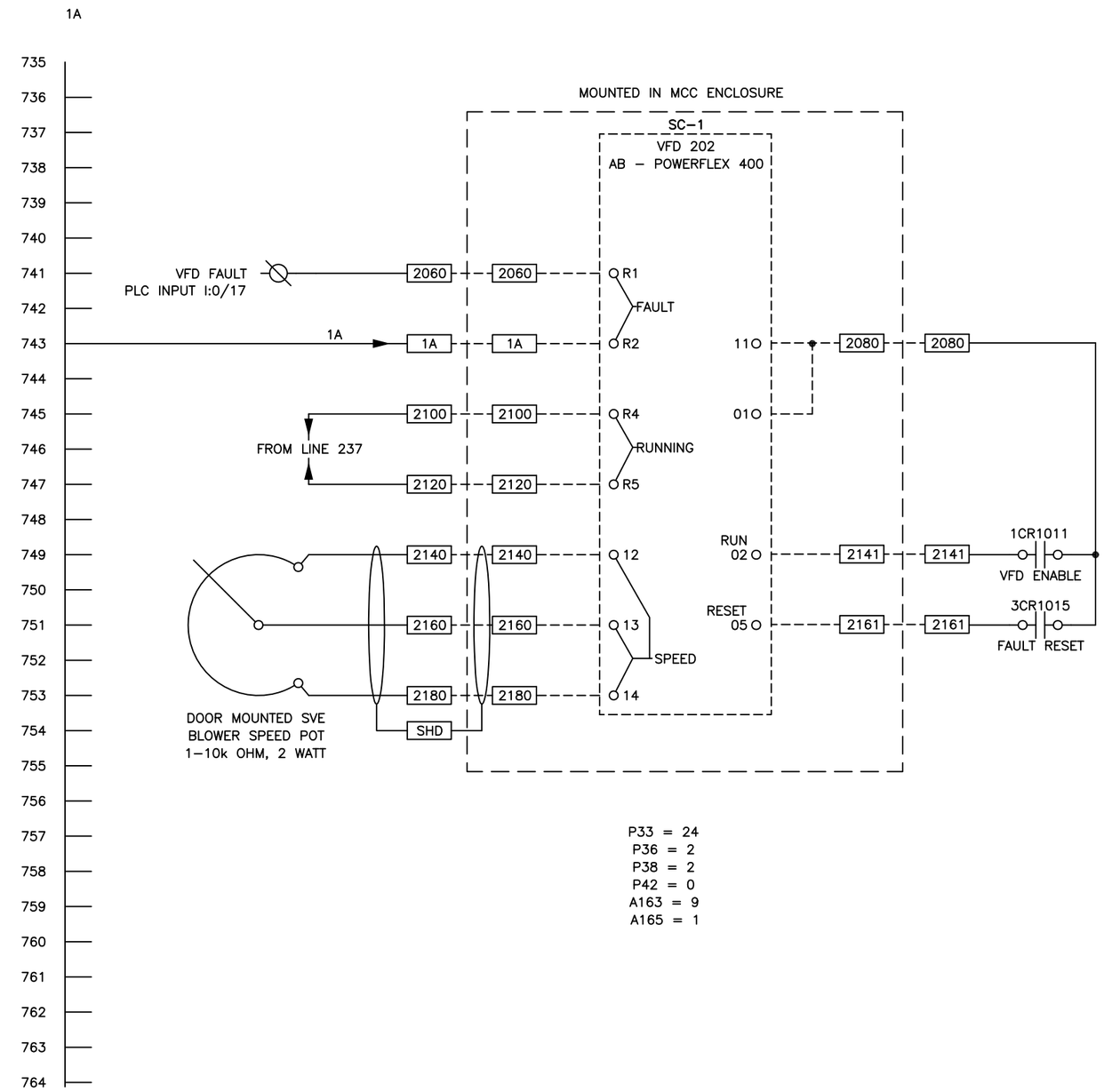

REV	BY	DATE	CHANGE
5	EAM	12/1/	Global Fab Updates
4	BPH	10/25/11	KF As Built
3	BPH	10/18/11	KF As Built
2	EAM	9/14/11	Moved Motor Overloads Outside Panel
1	BPH	9/2/11	Submittal

INTELLISHARE ENVIRONMENTAL
CLEAN AIR SOLUTIONS

PROJECT ID

TITLE
ELECTRICAL SCHEMATIC
CT01000

DRAWING NO. N−11−1199 −407

SCALE NONE

DRAWN EAM DATE 8/7/11
CHECKED DATE
APPROVED DATE
LAST DRAWN BY EAM DATE 8/7/11

CUSTOMER
Solutia
W.G. Krummerich Facility
Sauget, IL

KF NUMBER 11291

PAGE 1 OF 1

LAST PLOTTED BY EAM DATE 8/7/11

MCP PANEL WIRING

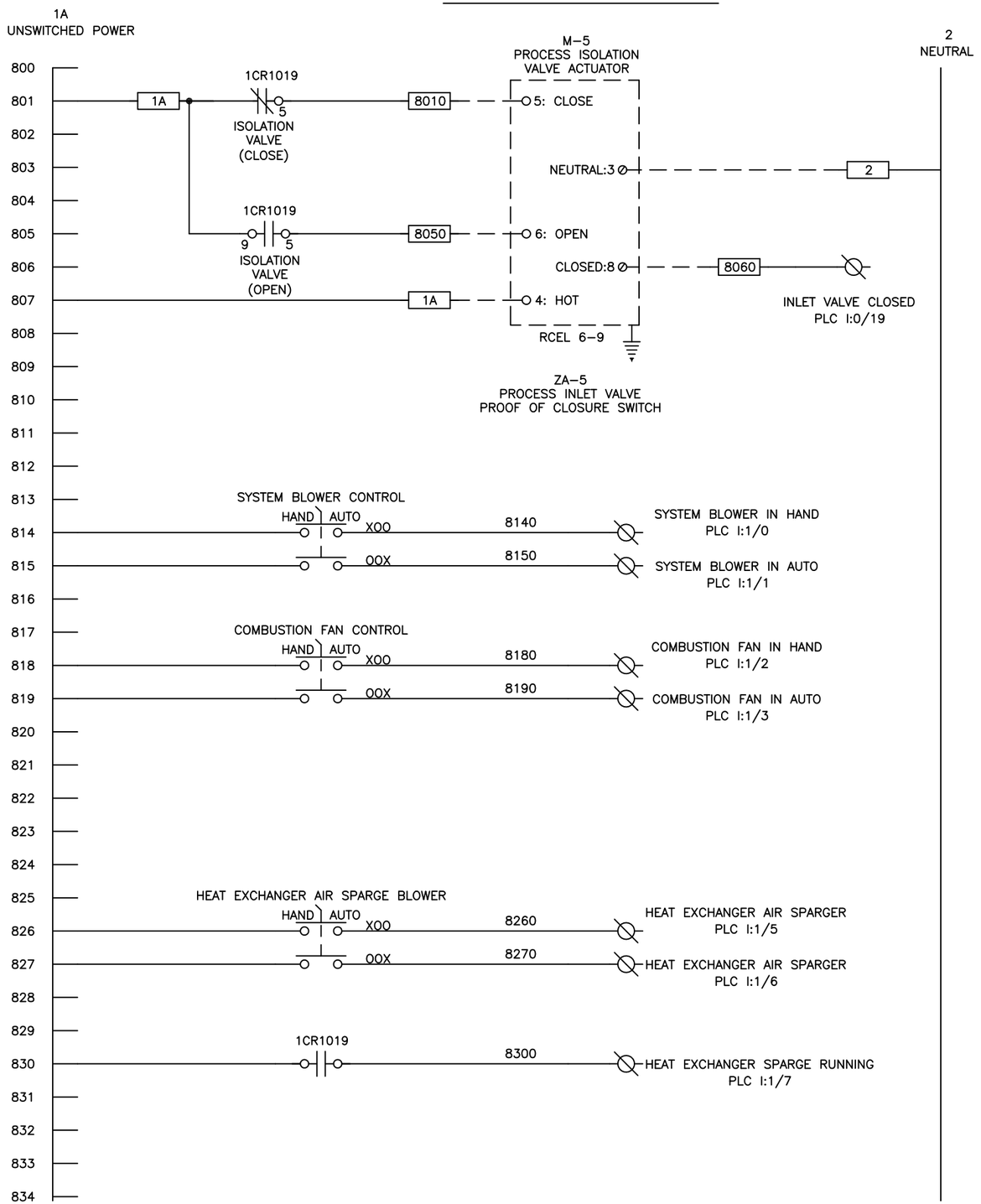

MCP PANEL WIRING

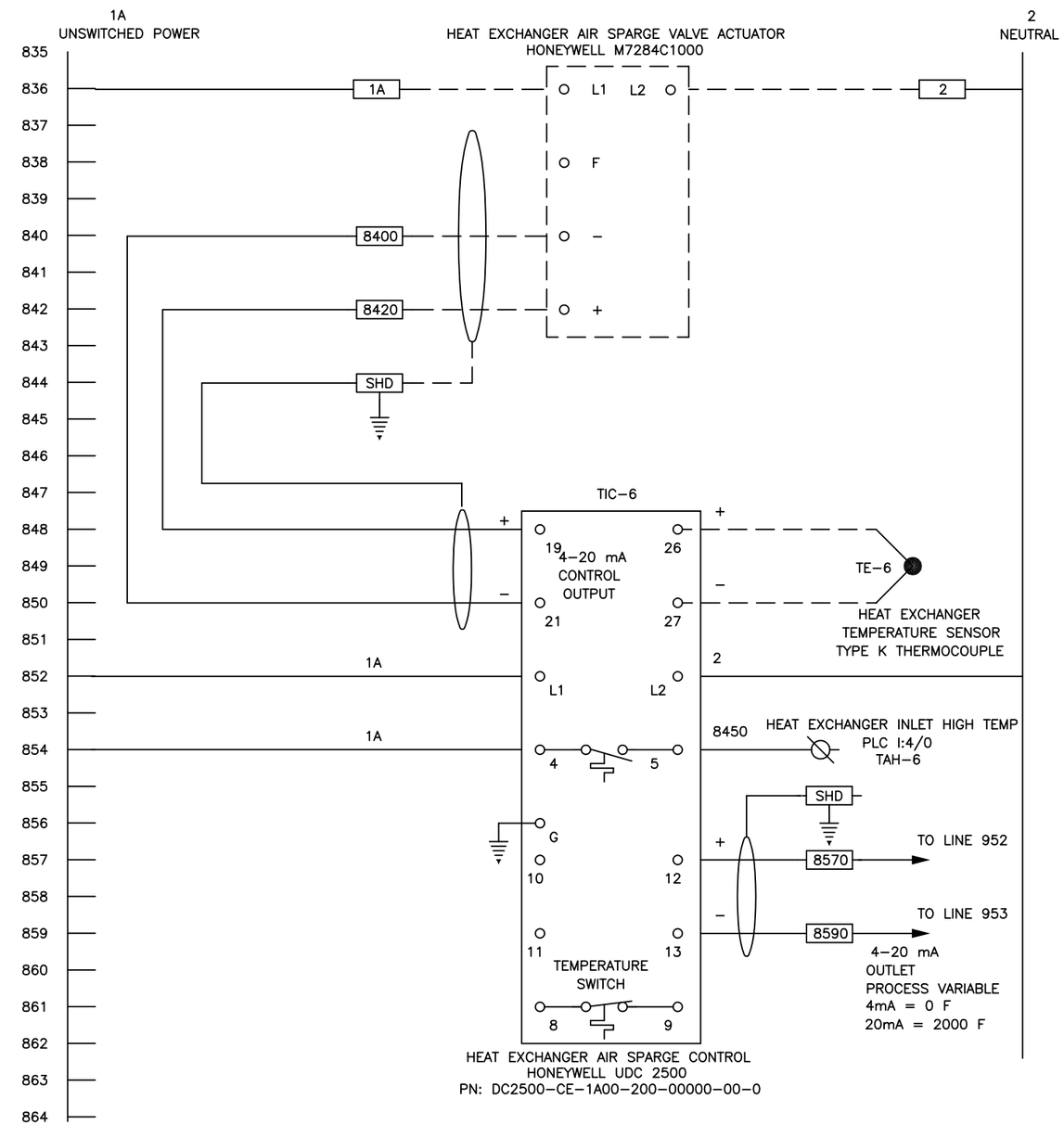

REV	BY	DATE	CHANGE
5	EAM	12/1/	Global Fab Updates
4	BPH	10/25/11	KF As Built
3	BPH	10/18/11	KF As Built
2	EAM	9/14/11	Moved Motor Overloads Outside Panel
1	BPH	9/2/11	Submittal

INTELLISHARE ENVIRONMENTAL
CLEAN AIR SOLUTIONS

PROJECT ID

TITLE
ELECTRICAL SCHEMATIC
CT01000

DRAWING NO. N-11-1199-408

SCALE NONE

DRAWN EAM DATE 8/7/11

CHECKED DATE

APPROVED DATE

LAST DRAWN BY EAM DATE 8/7/11

CUSTOMER
Solutia
W.G. Krummerich Facility
Sauget, IL

KF NUMBER 11291

PAGE 1 OF 1

LAST PLOTTED BY EAM DATE 8/7/11

MCP PANEL WIRING

1A UNSWITCHED POWER

2 NEUTRAL

PLC – BASE UNIT
ALLEN–BRADLEY
1766–L32AWA
MICROLOGIX 1400

PLC INPUTS REFERENCE

Line	Device	Wire	Input	Common
900				
901	E–STOP – SEE LINE 313	1	I:0/0	AC COM0
902	LOW FUEL PRESSURE SWITCH – SEE LINE 320	3200	I:0/1	
903	HIGH FUEL PRESSURE SWITCH – SEE LINE 320	3201	I:0/2	
904	L.E.L. SWITCH – SEE LINE 325	3250	I:0/3	
905	HIGH INLET TEMP – SEE LINE 325	3251	I:0/4	AC COM1
906	HIGH OUTLET TEMP – SEE LINE 325	2100	I:0/5	
907	SYSTEM BLOWER RUNNING – SEE LINE 337	2120	I:0/6	
908	SYSTEM AIR PROVEN – SEE LINE 337	3370	I:0/7	
909	COMBUSTION FAN RUNNING – SEE LINE 343	3430	I:0/8	AC COM2
910	COMBUSTION FAN AIR PROVEN – SEE LINE 343	3431	I:0/9	
911	HIGH DF PRESSURE – SEE LINE 349	3490	I:0/10	
912	BURNER GAS VALVE CLOSED – SEE LINE 353	3530	I:0/11	
913	DUNGS VALVES CLOSED – SEE LINE 353	3531	I:0/12	AC COM3
914	FLAME FAILURE – SEE LINE 423	4230	I:0/13	
915	BURNER ON – SEE LINE 463	4630	I:0/14	
916	SYSTEM READY TEMP – SEE LINE 525	5250	I:0/15	
917	DILUTION VALVE OPEN – SEE LINE 614	6140	I:0/16	
918	SYSTEM BLOWER VFD FAULT – SEE LINE 741	2060	I:0/17	
919	SVE/AS SYSTEM RUNNING – SEE LINE 1047	10470	I:0/18	
920	SYSTEM INLET VALVE CLOSED – SEE LINE 806	8060	I:0/19	
921	INLET TEMP – SEE LINE 5280	5280	IA COM	
922	OUTLET TEMP – SEE LINE 6280	6280	IV (+)	
923	TEMP COMMON – SEE LINE 5300 & 6300	5300	IV (+)	
924				
925				
926				
927				

1762–IA8

Line	Device	Wire	Input	Common
928	SYSTEM BLOWER IN HAND – SEE LINE 814	8140	I:1/0	
929	SYSTEM BLOWER IN AUTO – SEE LINE 815	8150	I:1/1	AC COM
930	COMBUSTION BLOWER IN HAND – SEE LINE 814	8180	I:1/2	
931	COMBUSTION BLOWER IN AUTO – SEE LINE 815	8190	I:1/3	
932	SPARE		I:1/4	
933	HEAT EXCHANGER SPARGE IN HAND – SEE LINE 826	8260	I:1/5	AC COM
934	HEAT EXCHANGER SPARGE IN AUTO – SEE LINE 827	8270	I:1/6	
	HEAT EXCHANGER SPARGE RUNNING – SEE LINE 830	8300	I:1/7	

MCP PANEL WIRING

1A UNSWITCHED POWER

2 NEUTRAL

1762–IA8

Line	Device	Wire	Input	Common
935				
936	HEAT EXCHANGER AIR SPARGE – SEE LINE 845	8450	I:4/0	
937			I:4/1	AC COM
938			I:4/2	
939			I:4/3	
940			I:4/4	
941			I:4/5	AC COM
942			I:4/6	
943			I:4/7	
944				

1762–IF4

Line	Device	Wire	Input
945			
946	INLET AIR FLOW – SEE LINE 702	7020	I:2.0+
947		–24	I:2.0–
948	COMBUSTION AIR FLOW – SEE LINE 710	7100	I:2.1+
949		–24	I:2.1–
950	LEL – SEE LINE 719	7210	I:2.2+
951		7200	I:2.2–
952	HEAT EXCHANGER TEMP – SEE LINE 858	8570	I:2.3+
953		8590	I:2.3–
954			

1762–IT4

Line	Device	Wire	Input
955			
956	STACK TEMP HX MODE TYPE K THERMOCOUPLE – TE–3	YELLOW	I:3.0+
957		RED	I:3.0–
958	HEAT EXCHANGER OUTLET TEMP TYPE K THERMOCOUPLE – TE–4	YELLOW	I:3.1+
959		RED	I:3.1–
960	FLAME ARRESTOR OUTLET TEMP TYPE K THERMOCOUPLE – TE–5	YELLOW	I:3.2+
961		RED	I:3.2–
962	STACK TEMP HX BYPASSED TYPE K THERMOCOUPLE – TE–3	YELLOW	I:3.3+
963		RED	I:3.3–
964			

REV	BY	DATE	CHANGE
5	EAM	12/1/	Global Fab Updates
4	BPH	10/25/11	KF As Built
3	BPH	10/18/11	KF As Built
2	EAM	9/14/11	Moved Motor Overloads Outside Panel
1	BPH	9/2/11	Submittal

INTELLISHARE ENVIRONMENTAL
CLEAN AIR SOLUTIONS

PROJECT ID

TITLE: ELECTRICAL SCHEMATIC
CT01000

DRAWING NO. N–11–1199 –409

SCALE NONE

DRAWN EAM DATE 8/7/11
CHECKED DATE
APPROVED DATE
LAST DRAWN BY EAM DATE 8/7/11

CUSTOMER
Solutia
W.G. Krummerich Facility
Sauget, IL

KF NUMBER 11291

PAGE 1 OF 1

LAST PLOTTED BY EAM DATE 8/7/11

MCP PANEL WIRING

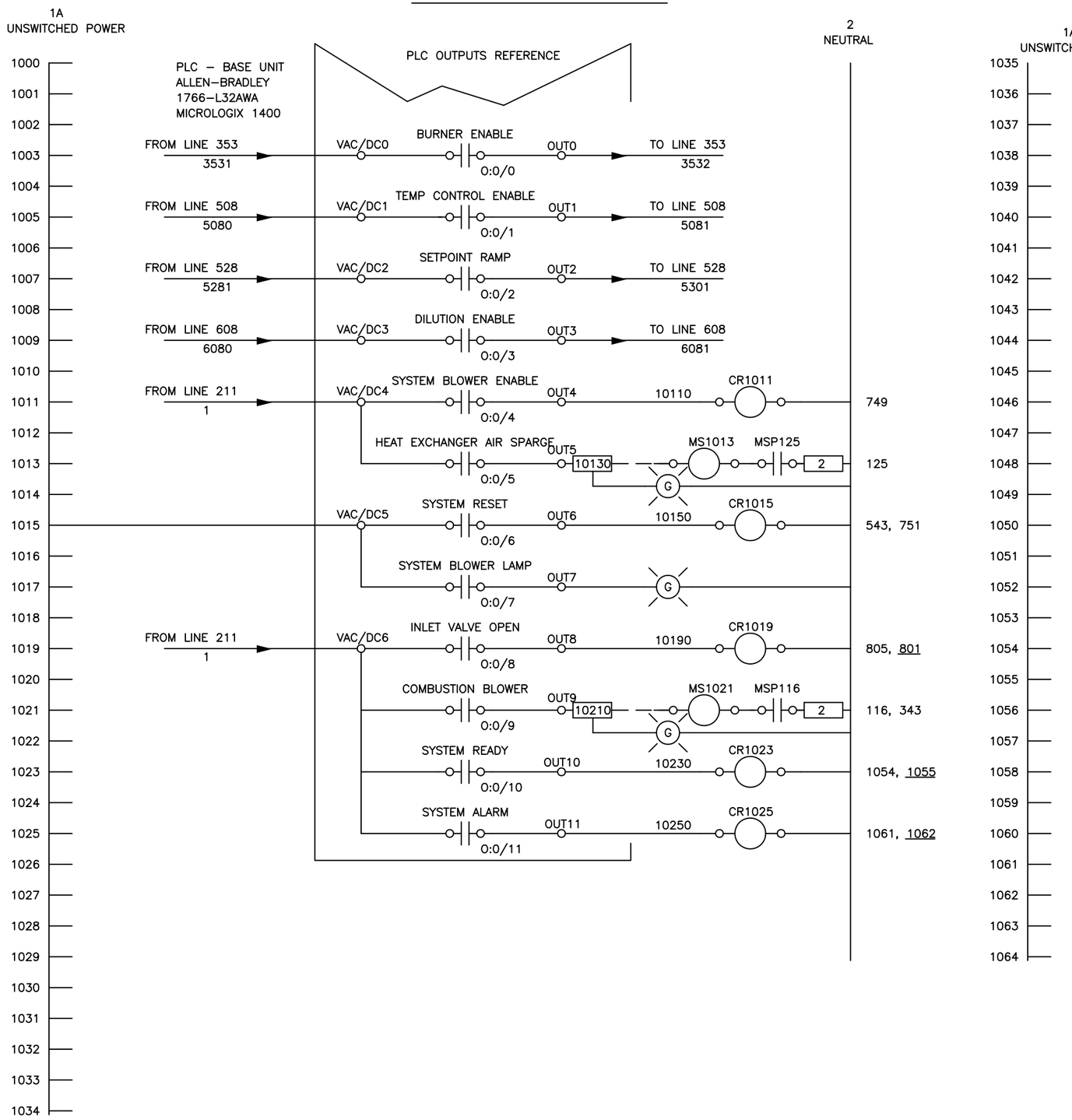

CUSTOMER INTERFACE WIRING
MCP PANEL TO CUSTOMER PANEL

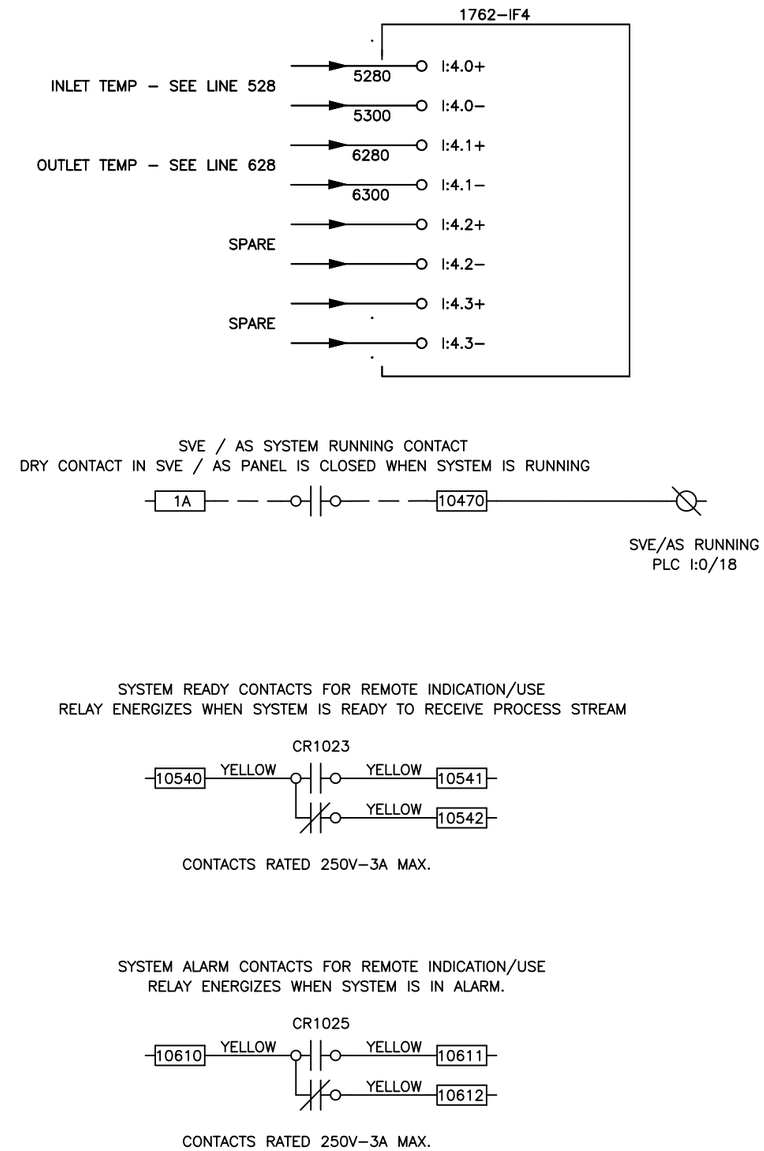

REV	BY	DATE	CHANGE
5	EAM	12/1/	Global Fab Updates
4	BPH	10/25/11	KF As Built
3	BPH	10/18/11	KF As Built
2	EAM	9/14/11	Moved Motor Overloads Outside Panel
1	BPH	9/2/11	Submittal

INTELLISHARE ENVIRONMENTAL
CLEAN AIR SOLUTIONS

PROJECT ID

TITLE
ELECTRICAL SCHEMATIC
CTO1000

DRAWING NO. N–11–1199 –410

SCALE NONE

DRAWN EAM DATE 8/7/11

CHECKED DATE

APPROVED DATE

LAST DRAWN BY EAM DATE 8/7/11

CUSTOMER
Solutia
W.G. Krummerich Facility
Sauget, IL

KF NUMBER 11291

PAGE 1 OF 1

LAST PLOTTED BY EAM DATE 8/7/11

MCP PANEL WIRING

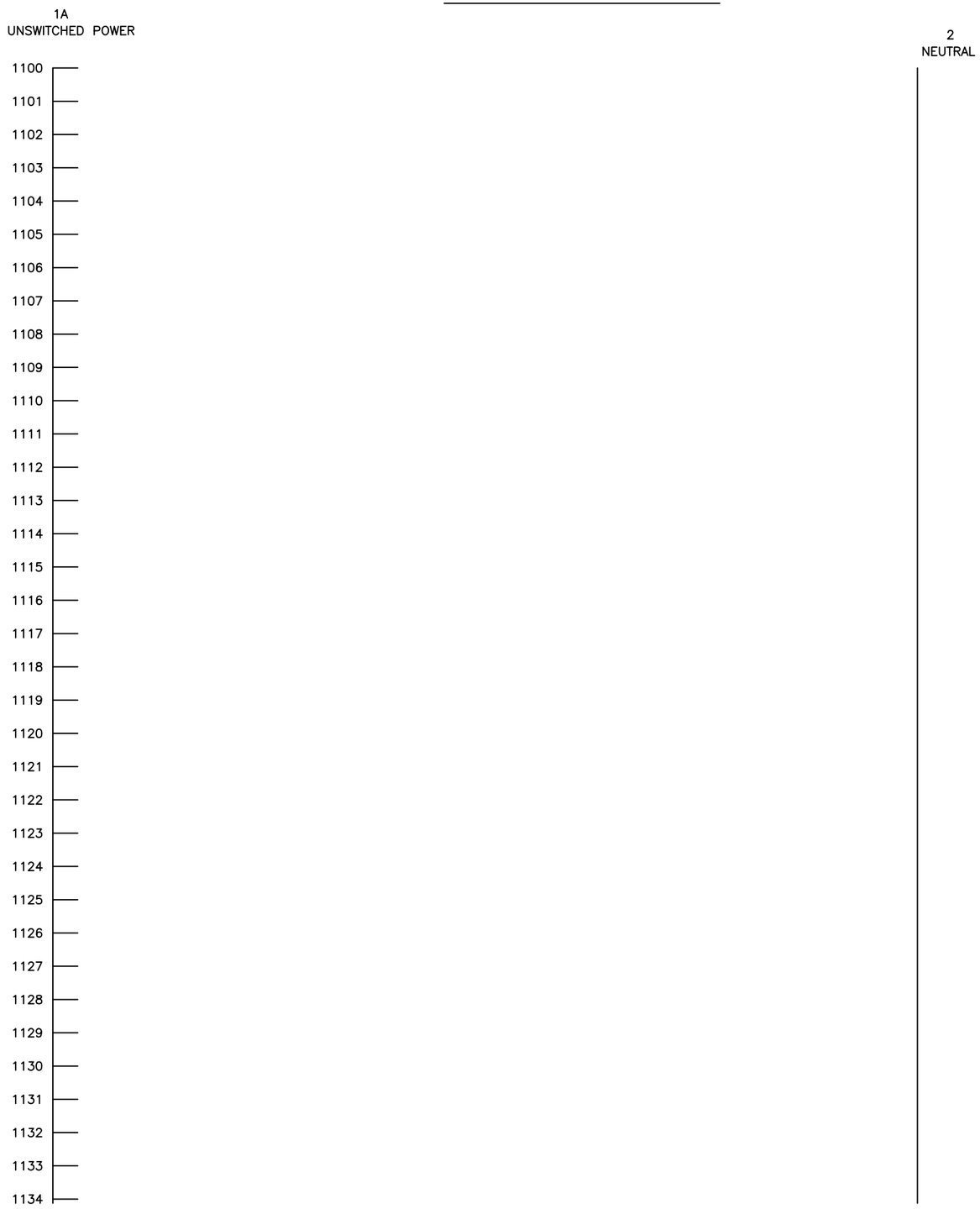

MCP PANEL WIRING

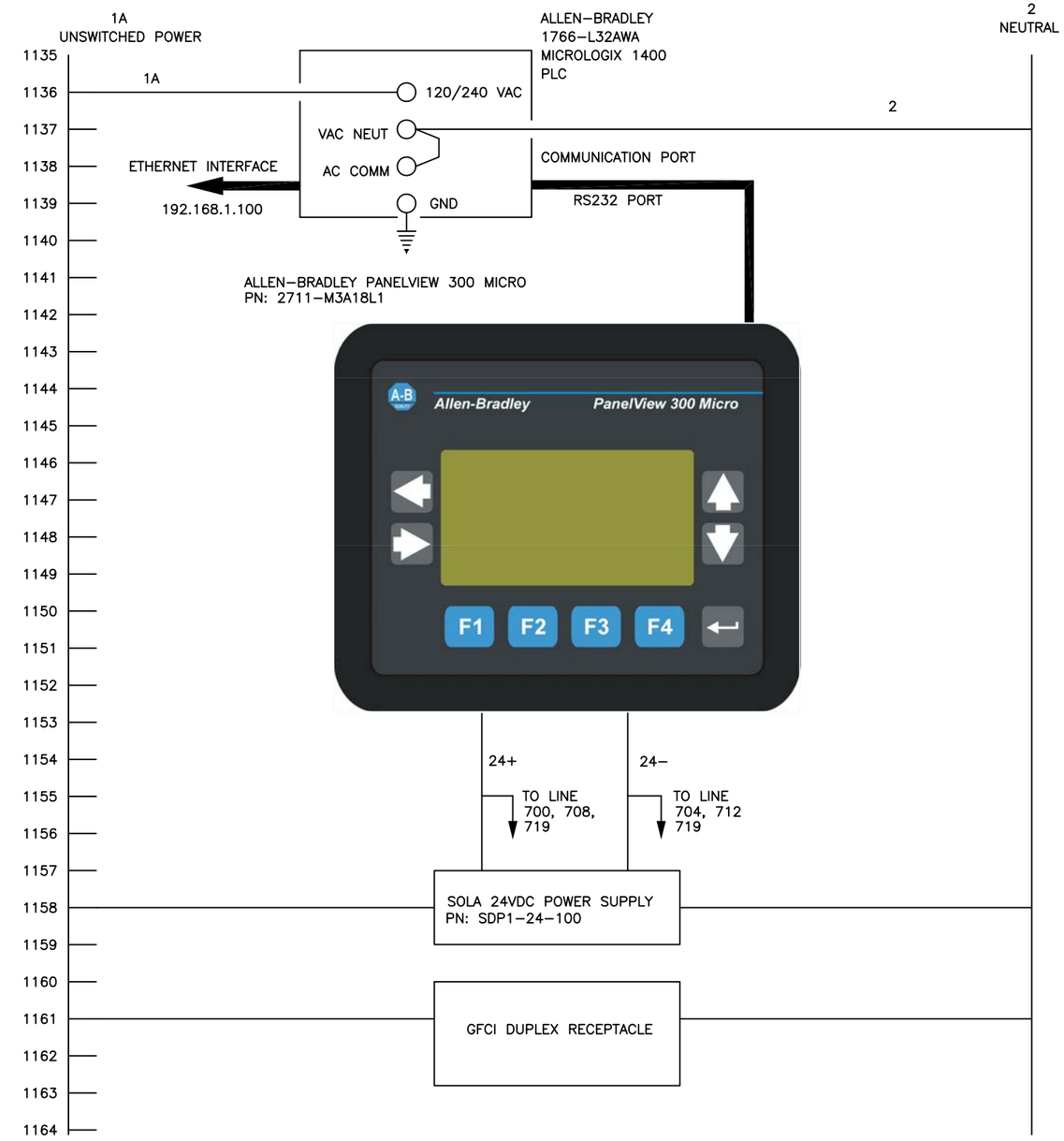

REV	BY	DATE	CHANGE
5	EAM	12/1/	Global Fab Updates
4	BPH	10/25/11	KF As Built
3	BPH	10/18/11	KF As Built
2	EAM	9/14/11	Moved Motor Overloads Outside Panel
1	BPH	9/2/11	Submittal

INTELLISHARE ENVIRONMENTAL
CLEAN AIR SOLUTIONS

PROJECT ID

TITLE
ELECTRICAL SCHEMATIC
CTO1000

DRAWING NO. N–11–1199 –411

SCALE NONE

DRAWN EAM DATE 8/7/11

CHECKED DATE

APPROVED DATE

LAST DRAWN BY EAM DATE 8/7/11

CUSTOMER
Solutia
W.G. Krummerich Facility
Sauget, IL

KF NUMBER 11291

PAGE 1 OF 1

LAST PLOTTED BY EAM DATE 8/7/11

MCC PANEL WIRING

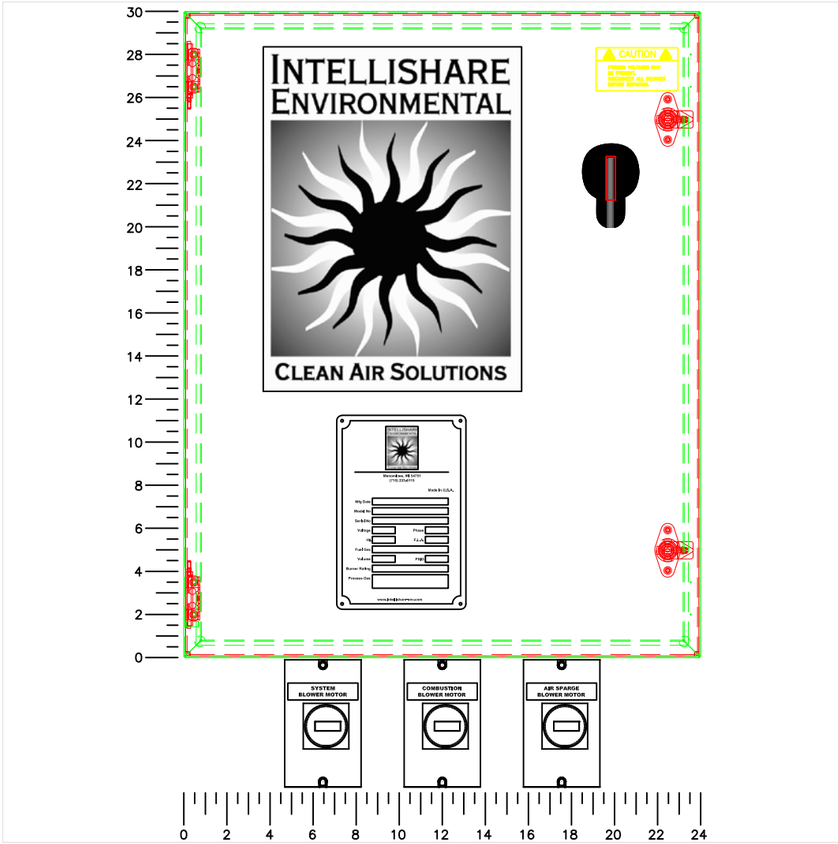

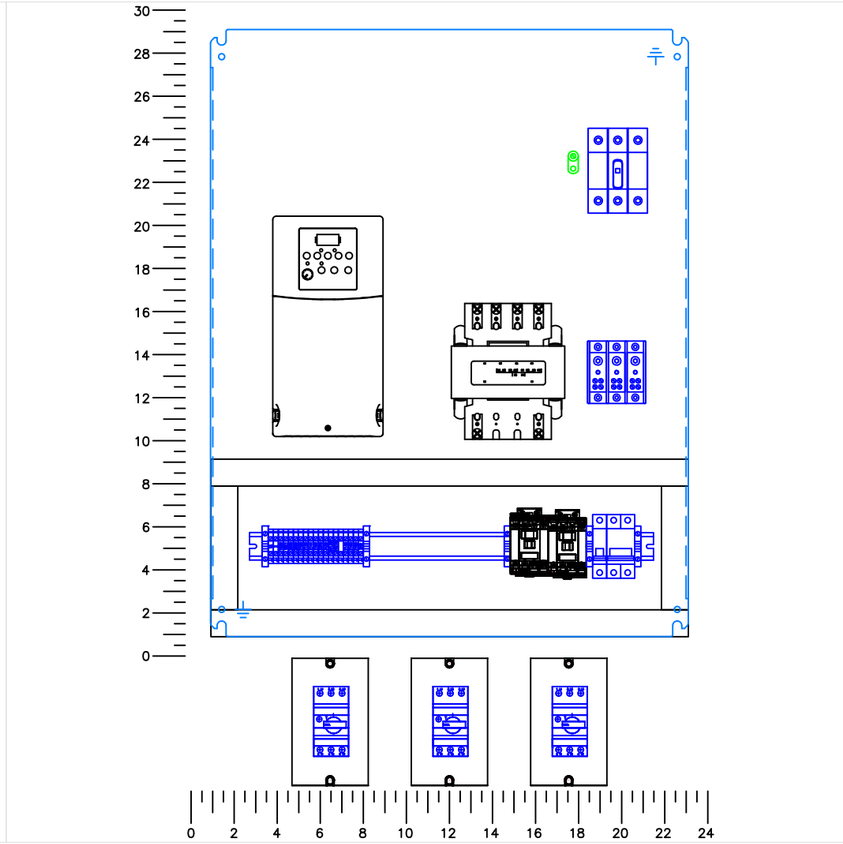

ITEM	QTY.	DESCRIPTION	PART NUMBER	MFG.
1	1	ENCLOSURE – 30" x 24" x 10"	CSD302410SS	HOFFMAN
2	1	SUBPANEL – 30" x 24"	CP3024	HOFFMAN
3				
4	1	CONTROL TRANSFORMER 460/230–115, 500VA	E500	HEVI–DUTY
5	1	CIRCUIT BREAKER 5A, 2P	WMZT2C05	EATON
6	1	CIRCUIT BREAKER 7A, 1P	WMZT1C07	EATON
7	1	DISTRIBUTION BLOCK	16220–3	BUSSMAN
8	6	WIREWAY	F1X3WH6	PANDUIT
	6	WIREWAY COVER	C1WH6	PANDUIT
9	1	CONTACTOR	100–C12D10	A–B
10	1	MOTOR CIRCUIT PROTECTOR	140M–C2E–C10	A–B
	1	MOTOR CIRCUIT PROTECTOR AUX CONTACT	140M–C–AFA10	A–B
11	1	POWERFLEX 400 VFD, 20 HP	22C–D017N103	A–B
12	1	MOTOR CIRCUIT PROTECTOR	140M–C2E–C16	A–B
13	1	MOTOR CIRCUIT PROTECTOR AUX CONTACT	140M–C–AFA10	A–B
14	1	GROUND LUG	L70	CONNECTOR MFG
15	1	CUSTOM DEVICE TAG – WARNING LABEL	TAG–CUS	CUSTOM ENGRAVING
16	14	TERMINAL BLOCK	1492–J3	A–B
	1	TERMINAL END BARRIER	1492–EBJ3	A–B
	1	TERMINAL BLOCK JUMPER	1492–CJLJ5–50	A–B
	3	TERMINAL BLOCK BLUE	1492–J3B	A–B
	1	TERMINAL BLOCK – GROUNDING	1492–JG3	A–B
17	6	DIN RAIL END CLAMP	1492–EAJ35	A–B
18	1	35MM DIN RAIL – SHALLOW	173220.05	ENTERLEC
19	1	35MM DIN RAIL – DEEP	101598.26	ENTERLEC
20	1	GROUND LUG	L70	CONNECTOR MFG
21	2	VENT KIT	A–VK64SS	HOFFMAN
22	2	FILTER KIT	A–FLT64	HOFFMAN
23	1	NON–FUSED DISCONNECT	OT63F3	ABB
	1	NON–FUSED DISCONNECT SHAFT	OXP6X290	ABB
	1	NON–FUSED DISCONNECT HANDLE	OHY65J6	ABB
24	1	CONTACTOR	100–C09D10	A–B
25	1	MOTOR CIRCUIT PROTECTOR	140M–C2E–B40	A–B
	1	MOTOR CIRCUIT PROTECTOR AUX CONTACT	140M–C–AFA10	A–B
26	3	OVERLOAD ENCLOSURE	198E–AYTJ2	AB

ALL TAGS BLACK WITH WHITE LETTERS

A SYSTEM BLOWER MOTOR (11)

B COMBUSTION BLOWER MOTOR (11)

C AIR SPARGE BLOWER MOTOR (11)

CAUTION (12)

FOREIGN VOLTAGES MAY BE PRESENT. DISCONNECT ALL SOURCES BEFORE SERVICING.

ENLARGED VIEW OF TERMINAL BLOCKS

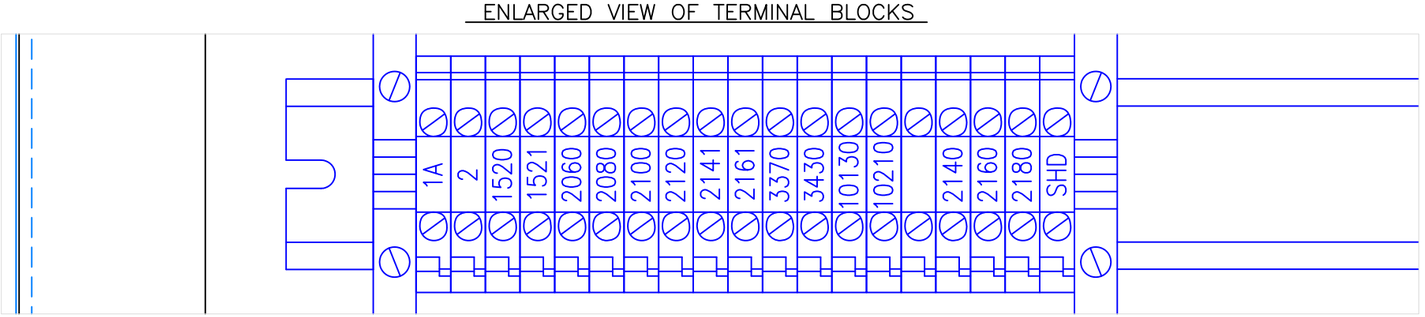

REV	BY	DATE	CHANGE
5	EAM	12/1/	Global Fab Updates
4	BPH	10/25/11	KF As Built
3	BPH	10/18/11	KF As Built
2	EAM	9/14/11	Moved Motor Overloads Outside Panel
1	BPH	9/2/11	Submittal

INTELLISHARE ENVIRONMENTAL
CLEAN AIR SOLUTIONS

PROJECT ID

TITLE
ELECTRICAL SCHEMATIC
CT01000

DRAWING NO. N–11–1199 –450

SCALE NONE

DRAWN EAM DATE 8/7/11

CHECKED DATE

APPROVED DATE

LAST DRAWN BY EAM DATE 8/7/11

CUSTOMER
Solutia
W.G. Krummerich Facility
Sauget, IL

KF NUMBER 11291

PAGE 1 OF 1

LAST PLOTTED BY EAM DATE 8/7/11

MCP PANEL WIRING

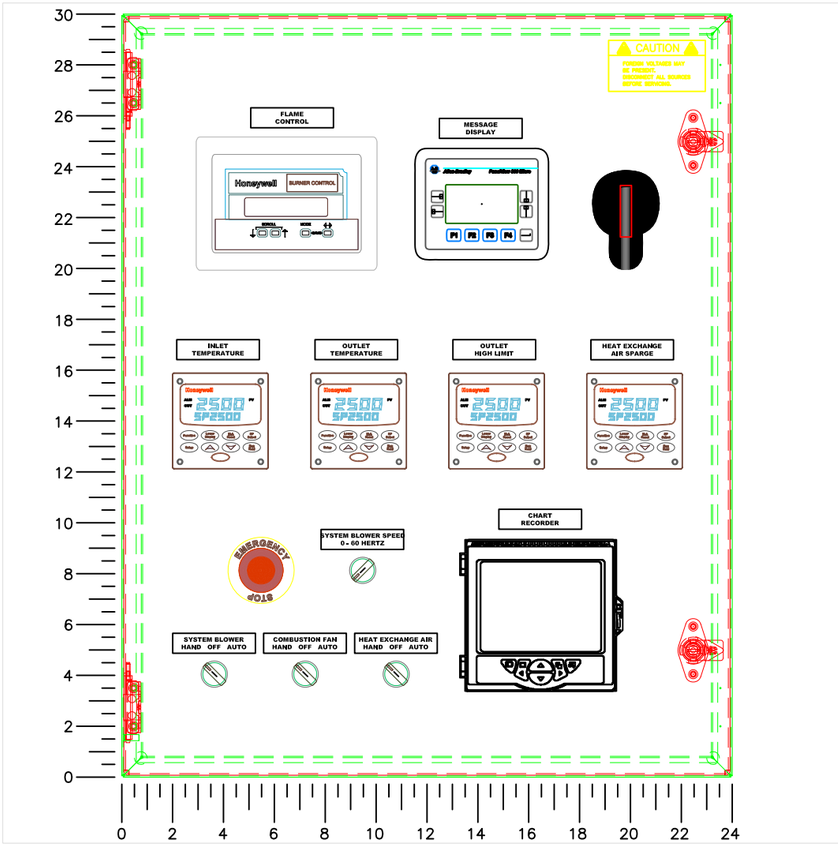

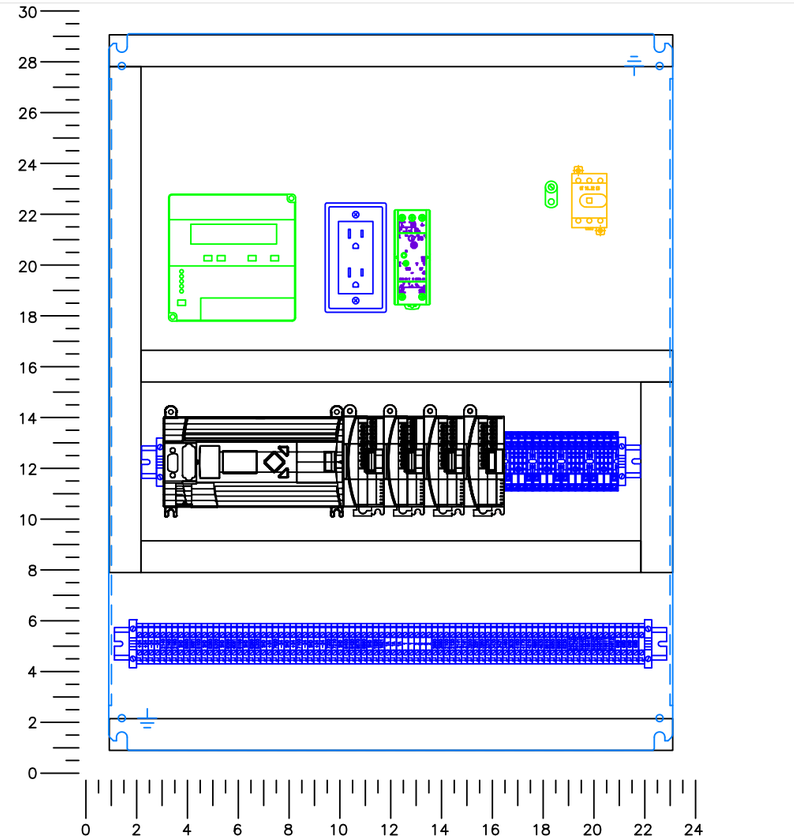

ALL TAGS BLACK WITH WHITE LETTERS

A FLAME CONTROL (11)

B MESSAGE DISPLAY (11)

C SYSTEM BLOWER HAND OFF AUTO (11)

D COMBUSTION BLOWER HAND OFF AUTO (11)

E INLET TEMPERATURE (11)

F OUTLET TEMPERATURE (11)

G OUTLET HIGH LIMIT (11)

H SYSTEM BLOWER SPEED 0 – 60 HERTZ (11)

J HEAT EXCHANGER HAND OFF AUTO (11)

K HEAT EXCHANGER AIR SPARGE (11)

K CHART RECORDER (11)

CAUTION (12)

FOREIGN VOLTAGES MAY BE PRESENT. DISCONNECT ALL SOURCES BEFORE SERVICING.

ITEM	QTY.	DESCRIPTION	PART NUMBER	MFG.
1	1	ENCLOSURE – 30" x 24" x 10"	CSD302410SS	HOFFMAN
2	1	SUBPANEL – 30" x 24"	CP3024	HOFFMAN
3				
4	1	DUPLEX RECEPTICLE + COVER GFCI	7599–I	LEVITON
	1	HANDY BOX	58361–1/2	STEEL CITY
5	8	CONTROL RELAY – 4 POLE	RU4S–CA110	IDEC
	8	CONTROL RELAY BASE – 4 POLE	SY4S–05	IDEC
6	5	CUSTOM DEVICE TAG	TAG–CUS	CUSTOM ENGRAVING
7	1	CUSTOM DEVICE TAG – WARNING LABEL	TAG–CUS	CUSTOM ENGRAVING
8	1	PB POT ASSEMBLY	800FP–POT6	A–B
9	6	DIN RAIL END CLAMP	1492–EAJ35	A–B
10	1	35MM DIN RAIL – SHALLOW	173220.05	ENTERLEC
11	1	35MM DIN RAIL – DEEP	101598.26	ENTERLEC
12	1	GROUND LUG	L70	CONNECTOR MFG
13	40	TERMINAL BLOCK	1492–J3	A–B
	1	TERMINAL END BARRIER	1492–EBJ3	A–B
	1	TERMINAL BLOCK JUMPER	1492–CJLJ5–50	A–B
	27	TERMINAL BLOCK BLUE	1492–J3B	A–B
	12	TERMINAL BLOCK – GROUNDING	1492–JG3	A–B
14	1	POWER SUPPLY	PSG60E	EATON
15	1	PANELVIEW 300 MESSAGE DISPLAY	2711–M3A18L1	A–B
16	1	MESSAGE DISPLAY CABLE	1761–CBL–HM02	A–B
17	11	WIREWAY	F1X3WH6	PANDUIT
	11	WIREWAY COVER	C1WH6	PANDUIT
18	1	PLC BASE UNIT	1766–L32AWA	A–B
	2	PLC INPUT MODULE	1762–IA8	A–B
	1	PLC ANALOG INPUT MODULE	1762–IF4	A–B
	1	PLC THERMCOUPLE INPUT MODULE	1762–IT4	A–B
19	1	PB E–STOP OPERATOR (E–STOP)	800FP–MP44	A–B
	1	PB BACKER	800F–ALP	A–B
	1	PB E–STOP LEGEND	800F–15YE112	A–B
	1	PB NC CONTACT BLOCK	800F–X01	A–B
20	1	TEMPERATURE LIMIT – DC2500–EE–1L00–200–10000–E–0–0		HONEYWELL
21	2	TEMPERATURE CONTROLLER – DC2500–CE–1A00–200–00000–00–0		HONEYWELL
22	1	TEMPERATURE CONTROLLER – DC2500–CE–1A00–200–00000–00–0		HONEYWELL
23	1	FLAME SAFEGUARD	RM7895B–1013	HONEYWELL
	1	FLAME SAFEGUARD MOUNTING BASE	Q7800A–1005	HONEYWELL
	1	FLAME STRENGTH AMPLIFIER	R7847A–1033	HONEYWELL
	1	PRE–PURGE TIMER 30 SEC.	ST7800A–1039	HONEYWELL
	1	DISPLAY MODULE	S7800A–1142	HONEYWELL
24	1	PAPERLESS CHART RECORDER	SM503FB/U000000E/STD	ABB
25	1	NON–FUSED DISCONNECT	OT40F3	ABB
	1	NON–FUSED DISCONNECT SHAFT	OXP6X290	ABB
	1	NON–FUSED DISCONNECT HANDLE	OHY65J6	ABB
26	3	PB ILLUMINATED SELECTOR OPERATOR	800FM–LSL33	A–B
	3	PB BACKER	800F–ALP	A–B
	3	PB LED	800F–N5G	A–B
	6	PB NO CONTACT BLOCK	800F–X10	A–B

ENLARGED VIEW OF TERMINAL BLOCKS

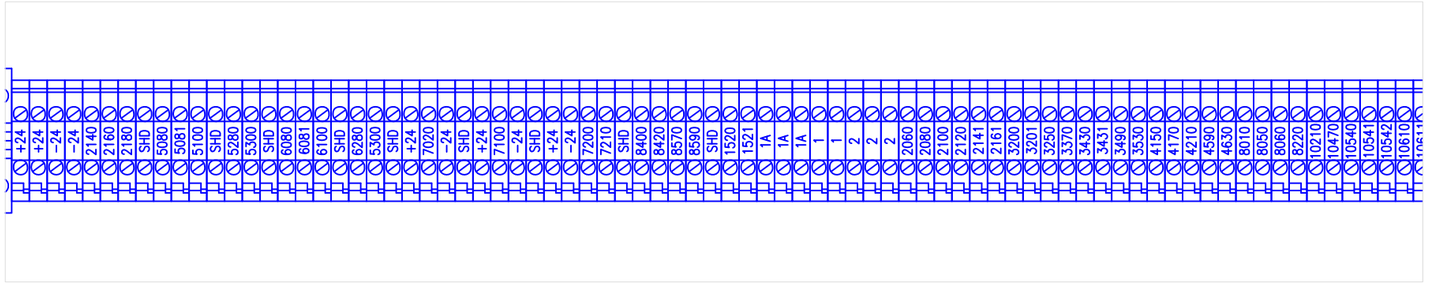

REV	BY	DATE	CHANGE
5	EAM	12/1/	Global Fab Updates
4	BPH	10/25/11	KF As Built
3	BPH	10/18/11	KF As Built
2	EAM	9/14/11	Moved Motor Overloads Outside Panel
1	BPH	9/2/11	Submittal

INTELLISHARE ENVIRONMENTAL
CLEAN AIR SOLUTIONS

PROJECT ID

TITLE
ELECTRICAL SCHEMATIC
CT01000

DRAWING NO. N–11–1199 –451

SCALE NONE

DRAWN EAM DATE 8/7/11

CHECKED DATE

APPROVED DATE

CUSTOMER
Solutia
W.G. Krummerich Facility
Sauget, IL

LAST DRAWN BY EAM DATE 8/7/11

KF NUMBER 11291

PAGE 1 OF 1

LAST PLOTTED BY EAM DATE 8/7/11

Wiring Instructions/Information

Field Connection	Terminal Strip	Function Text
Y	1	Low Fuel Pressure SW – Common
Y	3200	Low Fuel Pressure SW – Return
Y	3200	High Fuel Pressure SW – Common
Y	3201	High Fuel Pressure SW – Return
O	2301	L.E.L. SW – Common (Optional)
O	3250	L.E.L. SW – Return (Optional)
Y	2100	System Air SW – Common
Y	2120	System Air SW – Return
O	3430	Combustion Air Pressure SW – Common
O	3431	Combustion Air Pressure SW – Return
Y	3431	High DF Pressure SW – Common
Y	3490	High DF Pressure SW – Return
Y	4150	Ignition Transformer – Black Wire
Y	2	Ignition Transformer – White Wire
Y	4170	Pilot Solenoid Valves – Red Wire
Y	2	Pilot Solenoid Valves – Red Wire
Y	2	Blocking & Main Gas Valve Actuator Terminal #1
Y	4210	Blocking & Main Gas Valve Actuator Terminal #2
Y	4210	Blocking & Main Gas Valve Actuator Terminal #3
Y	1	Gas Valve SW – Common – Terminal #3
Y	4590	Gas Valve SW – Return – Terminal #1
Y	4630	Gas Valve SW – Return – Terminal #2
Y	3490	Burner Valve Actuator SW – Common
Y	3530	Burner Valve Actuator SW – Return
Y	1	Dilution Valve Actuator SW – Common
Y	6140	Dilution Valve Actuator SW – Return
Y	1A	Burner Valve Actuator Main Power – L1
Y	2	Burner Valve Actuator Main Power – L2
Y	1A	Dilution Valve Actuator Main Power – L1
Y	2	Dilution Valve Actuator Main Power – L2
Y	1A	Inlet Valve Closed Limit Switch – Common
Y	8060	Inlet Valve Closed Limit Switch – Return
Y	8050	Inlet Valve Open
Y	8010	Inlet Valve Close
Y	2	Inlet Valve Common
Y	1A	Inlet Valve Hot
Y	1A	Heat Exchange Exit High Temp – Feed
Y	8220	Heat Exchange Exit High Temp – Return

Terminal Block TB1 (Control Voltage)

Terminal block "TB1" represents all Control Voltage terminal connections. The "Field Conn." column is marked with an "Y" to identify required field connections, and an "O" for optional connections.

All wiring shall be RED 14 guage type THHN and must be isolated from low voltage wiring.

Warning: Follow appropriate guidlines when wiring to classified environment.

Field Connection	Terminal Strip	Function Text
Y	5081	Burner Valve Actuator – Analog Command (–)
Y	5100	Burner Valve Actuator – Analog Command (+)
Y	6081	Dilution Valve Actuator – Analog Command (–)
Y	6100	Dilution Valve Actuator – Analog Command (+)
Y	+24	Inlet Air Flow – Input
Y	7020	Inlet Air Flow – Output
Y	+24	Stack Air Flow – Input
Y	7100	Stack Air Flow – Output
Y	8400	Heat Exchanger Valve Actuator – Analog Command(–)
Y	8420	Heat Exchanger Valve Actuator – Analog Command(+)
Y	+24	LEL Power (+)
Y	–24	LEL Power (–)
Y	7210	LEL Output (+)
Y	7200	LEL Output (–)

Terminal Block TB2 (Low Voltage)

Terminal block "TB2" represents all Low Voltage terminal connections. The "Field Conn." column is marked with an "Y" to identify required field connections, and an "O" for optional connections.

All wiring shall be 18 AWG 3 conductor shielded belden cable or equivilent and must be isolated from high voltage wiring.

Warning: Follow appropriate guidlines when wiring to classified environment.

INCOMING POWER - 460V, 3 Phase

Incoming power shall be wired to the Fuse Block provided, see schematic line #101.
Wire must be sized to meet NEC & Local code requirements.

MOTOR CONNECTIONS

All field wiring for motors shall be black in color and sized to meet local and NEC requirements.

Connections are to be made directly from motor to overload block as shown on page 401 of the schematic.

All motor ground connections are to be connected to ground bar on panel.

Always isolate from any low voltage wiring.

The motors to be wired are shown below:

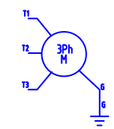

MTR	VOLTS	AMPS	WIRE
1M	460V	12	14AWG
2M	460V	6	14AWG
3M	460V	3.4	14AWG

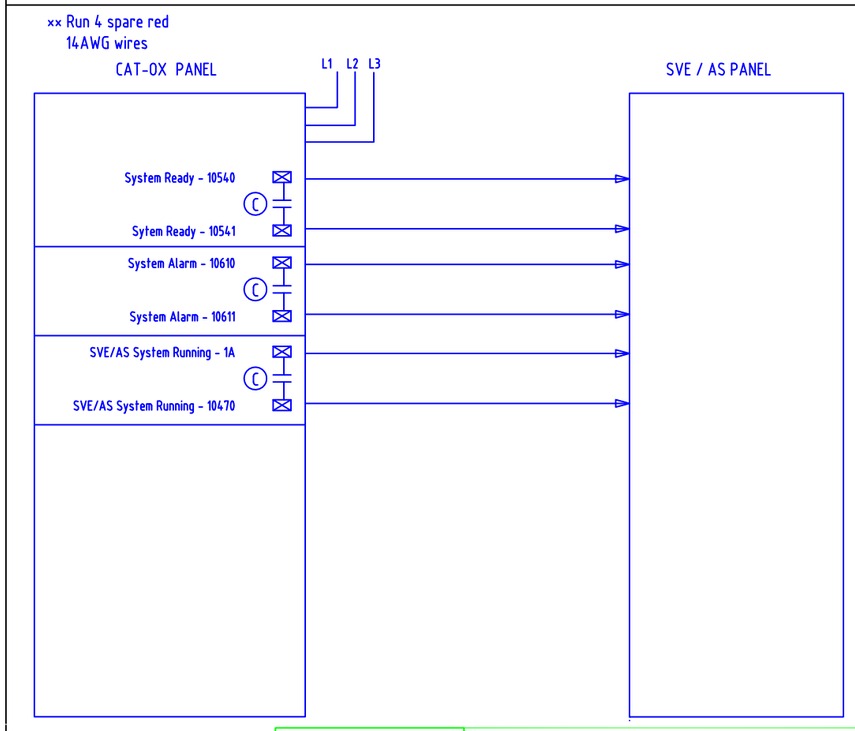

REV	BY	DATE	CHANGE
5	EAM	12/1/	Global Fab Updates
4	BPH	10/25/11	KF As Built
3	BPH	10/18/11	KF As Built
2	EAM	9/14/11	Moved Motor Overloads Outside Panel
1	BPH	9/2/11	Submittal

INTELLISHARE ENVIRONMENTAL
CLEAN AIR SOLUTIONS

PROJECT ID

TITLE
ELECTRICAL SCHEMATIC
CTO1000

DRAWING NO. N–11–1199 –460

SCALE NONE

DRAWN EAM DATE 8/7/11
CHECKED DATE
APPROVED DATE

CUSTOMER
Solutia
W.G. Krummerich Facility
Sauget, IL

LAST DRAWN BY EAM DATE 8/7/11
KF NUMBER 11291
PAGE 1 OF 1

LAST PLOTTED BY EAM DATE 8/7/11

APPENDIX G

Air and Water Discharge Permits

ILLINOIS ENVIRONMENTAL PROTECTION AGENCY

1021 NORTH GRAND AVENUE EAST, P.O. BOX 19506, SPRINGFIELD, ILLINOIS 62794-9506 - (217) 782-2113

PAT QUINN, GOVERNOR LISA BONNETT, INTERIM DIRECTOR

217/782-2113

CONSTRUCTION PERMIT

PERMITTEE

Solutia Inc. - W.G. Krummrich Plant
Attn: Brett Shank
500 Monsanto Avenue
Sauget, Illinois 62206

Application No.: 11040037 I.D. No.: 163121AAC
Applicant's Designation: SVE Date Received: April 20, 2011
Subject: Soil Vapor Extraction System - Former Benzene Storage & Pipeline Area
Date Issued: May 17, 2011
Location: 500 Monsanto Avenue, Sauget

Permit is hereby granted to the above-designated Permittee to CONSTRUCT emission source(s) and/or air pollution control equipment consisting of an in-situ soil vapor extraction system with oxidizers, as described in the above-referenced application. This Permit is subject to standard conditions attached hereto and the following special condition(s):

1a. This permit authorizes construction of an in-situ soil vapor extraction system (the affected system) that will be used for a soil remediation project at the former benzene storage and pipeline area at the source. Vapor extraction wells will be installed for applying vacuum to the contaminated soil within this area with selected wells periodically used for air injection to promote air flow. Groundwater extracted by the system will be processed using an air stripper.

Extracted vapor and the vapor discharge of the air stripper will be ducted to oxidizer(s) to control emissions of volatile organic material (VOM). When remediation begins, two oxidizers may be used in parallel to handle the volume of extracted vapor.

b. This permit only authorizes the treatment of extracted vapor and groundwater due to the affected system's operation for in-situ treatment of soil that is in its original location and will remain in that location following treatment, except for soil displaced from drilling wells, which must be appropriately handled.

2. This permit only authorizes in-situ treatment of soils that are only contaminated with volatile and semi-volatile organic materials.

Note: Soils classified as hazardous waste pursuant to Section 3.15 of the Illinois Environmental Protection Act (Act) cannot be treated without written approval from the Illinois EPA, Bureau of Land, including permits in accordance with Section 21(f) of the Act. The Permittee must make the determination that the soil to be treated is non-hazardous using the criteria under 35 IAC 721.111.

3a. This remediation project is subject to 35 IAC 212.301, which provides that no person shall cause or allow any visible emissions of fugitive particulate matter from any process, including any material handling or storage activity beyond the property line of the source.

b. i. The affected system is subject to the control requirements of 35 IAC 219, Subpart TT, so that the oxidizers must achieve at least 81 percent reduction in VOM emissions.

ii. The affected system is subject to 35 IAC 219.301 and 219.302, which requires that emissions of organic materials be no more than 8 pounds per hour or be controlled by at least 85 percent.

4a. This permit is issued based on the affected system not being subject to the National Emission Standard for Hazardous Air Pollutants (NESHAP) for Site Remediation, 40 CFR 63, Subpart GGGGG. This is because the project meets the exemption under this NESHAP for remedial activities conducted under the federal Resource Conservation and Recovery Act (RCRA). In particular, this project is being undertaken pursuant to an Administrative Order on Consent issued to the Permittee by USEPA pursuant to RCRA (R8H-5-00-003; May 3, 2000).

b. The Permittee shall comply with 35 IAC 219.105(d)(2)(A), which requires use of an approved continuous monitoring system that is installed, calibrated, maintained and operated according to vendor specification at all times an oxidizer is in use. For a thermal oxidizer, the continuous monitoring equipment shall monitor the combustion chamber temperature of the oxidizer. For a catalytic oxidizer, the equipment shall monitor the temperature rise across each catalytic afterburner bed or VOM concentration of the exhaust.

5. At all times that the affected system is generating vapors, emissions shall be controlled by an oxidizer. An oxidizer shall operate at a temperature of at least 1450°F (thermal) and in catalytic mode at 600°F.

6a. Emissions of nitrogen oxides (NO_x), carbon monoxide (CO), and volatile organic material (VOM) from the affected system shall not exceed the following limits:

Pollutant	(Lbs/Hour)	(Tons/Year)
NO_x	0.8	3.5
CO	0.4	1.5
VOM	2.4	10.4

b. This permit is issued based on negligible emissions of particulate matter and sulfur dioxide from the affected system. For this purpose, emissions of each pollutant shall not exceed nominal emission rates of 0.1 lb/hour and 0.44 tons/year.

c. This permit is issued based on the emissions of hazardous air pollutants (HAPs) from the affected system being less than 7.9 tons per

year of any single HAP and 10.4 tons per year of any combination of HAPs.

8a. The affected system and associated oxidizers shall be operated in accordance with good air pollution control practice to minimize emissions.

b. The affected system shall not begin operation until construction, including construction of the oxidizers, is complete, and reasonable measures short of actual operation have been taken to verify proper operation.

c. In the event that the operation of the affected system and any associated activities results in an odor nuisance, the Permittee shall take all appropriate and necessary actions, including but not limited to, reduction in the operating rate, in order to eliminate the nuisance.

9. The Permittee shall maintain records of the following items:

a. A file containing the manufacturer's specifications for the performance of each oxidizer, percent destruction or exhaust concentration for hydrocarbons, and recommended operating and maintenance procedures.

b. i. Operating hours of the affected system (hours/month); and

ii. Amount of groundwater processed (gallons/month).

c. The following records for the operation and maintenance of the affected system:

i. An operating log or other records for the affected system that at a minimum shall address:

Any unusual occurrences during each malfunction of the affected system that significantly impairs emission performance, including the nature and duration of the event, corrective actions taken, any deviations from the established procedures for such a malfunction, and preventative actions taken to address similar events.

ii. Inspection, maintenance and repair log(s) for the affected system that at a minimum shall identify such activities that are performed related to components that may affect emissions; the reason for such activities, i.e., whether planned or initiated due to a specific event or condition; and any failure to carry out the established maintenance procedures, with explanation.

d. Records for any period during which the affected system deviated from an applicable requirement.

e. Records of the VOM and HAP emissions of the affected system (tons/month and tons/year), with supporting calculations.

10. All records and logs required by this permit shall be retained at a readily accessible location at the source for at least three years from the date of entry and shall be made available for inspection and copying by the Illinois EPA upon request. Any records retained in an electronic format (e.g., computer) shall be capable of being retrieved and printed on paper during normal source office hours so as to be able to respond to an Illinois EPA request for records during the course of a source inspection.

11a. The Permittee shall promptly notify the Illinois EPA of deviations of the affected system from requirements set by this permit as follows. These notifications shall provide for each such incident, a description of the incident, the date and duration of the incident, and whether it occurred during startup, malfunction, breakdown, or shutdown.

i. Failure of the affected system, (including associated control systems) that is accompanied by the direct release of emissions of VOM to the atmosphere shall be reported within 15 days.

ii. Other deviations shall be reported in a quarterly report.

b. With these quarterly reports the Permittee shall also report any deviations from applicable compliance procedures for the affected system established by this permit, including specifying periods during which the continuous monitoring system was not in operation.

12. Two copies of required reports and notifications concerning equipment operation or repairs, performance testing or a continuous monitoring system shall be sent to:

Illinois Environmental Protection Agency
Division of Air Pollution Control
Compliance Section (#40)
P.O. Box 19276
Springfield, Illinois 62794-9276

<u>and</u> one copy shall be sent to the Illinois EPA's regional office at the following address unless otherwise indicated:

Illinois Environmental Protection Agency
Division of Air Pollution Control
2009 Mall Street
Collinsville, Illinois 62234

13. Operation of the affected system, as addressed by this Construction Permit, is authorized until the CAAPP permit for this source is revised or renewed, to address this system.

If you have any questions on this permit, please contact Bob Smet at 217/782-2113.

Edwin C. Bakowski

Edwin C. Bakowski, P.E.
Manager, Permit Section
Division of Air Pollution Control

Date Signed: May 17, 2011

ECB:RPS:jws

cc: Region 3
T. Dragovich, DLPC

STATE OF ILLINOIS
ENVIRONMENTAL PROTECTION AGENCY
DIVISION OF AIR POLLUTION CONTROL
P. O. BOX 19506
SPRINGFIELD, ILLINOIS 62794-9506

STANDARD CONDITIONS FOR CONSTRUCTION/DEVELOPMENT PERMITS ISSUED BY THE ILLINOIS ENVIRONMENTAL PROTECTION AGENCY

July 1, 1985

The Illinois Environmental Protection Act (Illinois Revised Statutes, Chapter 111-1/2, Section 1039) authorizes the Environmental Protection Agency to impose conditions on permits which it issues.

The following conditions are applicable unless susperseded by special condition(s).

1. Unless this permit has been extended or it has been voided by a newly issued permit, this permit will expire one year from the date of issuance, unless a continuous program of construction or development on this project has started by such time.

2. The construction or development covered by this permit shall be done in compliance with applicable provisions of the Illinois Environmental Protection Act and Regulations adopted by the Illinois Pollution Control Board.

3. There shall be no deviations from the approved plans and specifications unless a written request for modification, along with plans and specifications as required, shall have been submitted to the Agency and a supplemental written permit issued.

4. The permittee shall allow any duly authorized agent of the Agency upon the presentation of credentials, at reasonable times:

   a. to enter the permittee's property where actual or potential effluent, emission or noise sources are located or where any activity is to be conducted pursuant to this permit,

   b. to have access to and to copy any records required to be kept under the terms and conditions of this permit,

   c. to inspect, including during any hours of operation of equipment constructed or operated under this permit, such equipment and any equipment required to be kept, used, operated, calibrated and maintained under this permit,

   d. to obtain and remove samples of any discharge or emissions of pollutants, and

   e. to enter and utilize any photographic, recording, testing, monitoring or other equipment for the purpose of preserving, testing, monitoring, or recording any activity, discharge, or emission authorized by this permit.

5. The issuance of this permit:

   a. shall not be considered as in any manner affecting the title of the premises upon which the permitted facilities are to be located,

   b. does not release the permittee from any liability for damage to person or property caused by or resulting from the construction, maintenance, or operation of the proposed facilities,

   c. does not release the permittee from compliance with other applicable statutes and regulations of the United States, of the State of Illinois, or with applicable local laws, ordinances and regulations,

   d. does not take into consideration or attest to the structural stability of any units or parts of the project, and

e. in no manner implies or suggests that the Agency (or its officers, agents or employees) assumes any liability, directly or indirectly, for any loss due to damage, installation, maintenance, or operation of the proposed equipment or facility.

6. a. Unless a joint construction/operation permit has been issued, a permit for operation shall be obtained from the Agency before the equipment covered by this permit is placed into operation.

   b. For purposes of shakedown and testing, unless otherwise specified by a special permit condition, the equipment covered under this permit may be operated for a period not to exceed thirty (30) days.

7. The Agency may file a complaint with the Board for modification, suspension or revocation of a permit:

   a. upon discovery that the permit application contained misrepresentations, misinformation or false statements or that all relevant facts were not disclosed, or

   b. upon finding that any standard or special conditions have been violated, or

   c. upon any violations of the Environmental Protection Act or any regulation effective thereunder as a result of the construction or development authorized by this permit.

ENVIRONMENTAL PROTECTION AGENCY
BUREAU OF AIR

For assistance in preparing a permit application contact the Permit Section.

Illinois Environmental Protection Agency
Division of Air Pollution Control
Permit Section
1021 N. Grand Ave E.
P.O.Box 19506
Springfield, Illinois 62794-9506

or a regional office of the Field Operations Section. The regional offices and their areas of responsibility are shown on the map. The addresses and telephone numbers of the regional offices are as follows:

Illinois EPA
Region 1
Bureau of air, FOS
9511 West Harrison
Des Plaines, Illinois 60016
847/294-4000

Illinois EPA
Region 2
5415 North University
Peoria, Illinois 61614
309/693-5463

Illinois EPA
Region 3
2009 Mall Street
Collinsville, Illinois 62234
618/346-5120

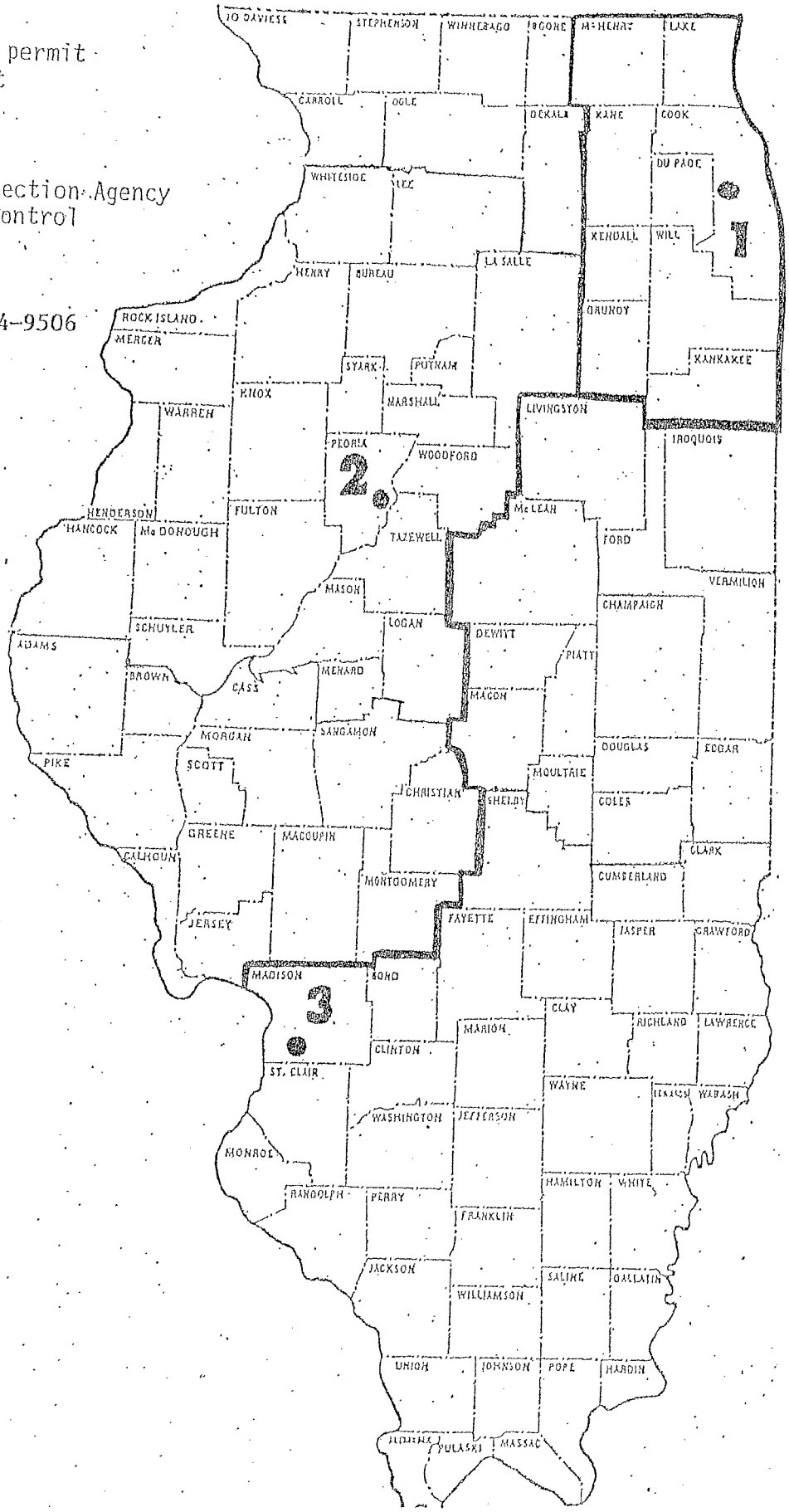

AMERICAN BOTTOMS
REGIONAL WASTEWATER TREATMENT FACILITY
1 AMERICAN BOTTOMS ROAD
SAUGET, ILLINOIS 62201-1075

(618) 337-1710
FAX (618) 337-8919

CERTIFIED MAIL & ELECTRONIC MAIL
7004 2510 0000 6909 1705

January 5, 2012

Mr. Brett Shank
Environmental Specialist
Solutia Inc. - W.G. Krummrich Plant
500 Monsanto Avenue
Sauget, Illinois 62206-1198

Subject: Discharge Permit No. 10C-105

Dear Mr. Shank:

Attached is the permit modification for the purpose of incorporating changes to pretreatment permit limitations at your facility. The final permit is issued pursuant to the e-mail response you sent on December 30, 2011, waiving the thirty day comment period. We agree to the changes regarding the typographical errors that you pointed out. We also agree to your suggestion of making the samples for semi-volatile and chloride analysis a grab sample with the understanding that the samples will be collected during a batch discharge so that they are representative of the daily discharge. We have added additional language to clarify that if multiple grabs all grabs will be weighted equally in the preparation of an in-lab site composite sample. In your e-mail you asked us to provide clarification on the acceptable analytical methods to be performed for chloride. The acceptable methods can be found in 40 CFR 136 Table 1B. See the table below for acceptable chloride methods.

Parameter	Methodology[58]	Reference (method number or page)					
		EPA[35,52]	Standard methods (18th, 19th)	Standard methods (20th)	Standard methods online	ASTM	USGS/AOAC/other
Chloride, mg/L	Titrimetric: (silver nitrate) or		4500–Cl–B	4500–Cl–B	4500–Cl–B–97	D512–89(99) (B)	I–1183–85[2]
	(Mercuric nitrate)		4500–Cl–C	4500–Cl–C	4500–Cl–C–97	D512–89 (99) (A)	973.51[3], I–1184–85[2]

	Colorimetric: manual or						I–1187–85[2]
	Automated (Ferricyanide)		4500–Cl–E	4500–Cl–E	4500–Cl–E–97		I–2187–85[2]
	Potentiometric Titration		4500–Cl–D	4500–Cl–D	4500–Cl–D–97		
	Ion Selective Electrode					D512–89(99)(C)	
	Ion Chromatography	300.0, Rev 2.1 (1993) and 300.1, Rev 1.0 (1997)	4110 B	4110 B	4110 B–00	D4327–97, 03	993.30[3]

American Bottoms laboratory has the capability to run chloride tests if Solutia would like to utilize the service.

We are reviewing your e-mail and determining if we have enough information to approve the design of the pretreatment systems. We may request additional information to determine if the pretreatment system is sufficient in design.

All discharges from this facility and related actions and reports shall be in accordance with the terms and conditions of this permit and the Ordinance. If you wish to appeal any effluent limitations, pretreatment requirements, or conditions imposed in this wastewater discharge permit, a written notice of appeal should be filed within thirty days after the effective date of the permit. Your written notice of appeal, if filed, should be mailed or delivered to:

Village Clerk
Village of Sauget
2897 Falling Springs Road
Sauget, Illinois 62206

If you have any questions related to this permit, please call me at 337-9749.

Sincerely,

Adam Rossel
Pretreatment Coordinator

AMERICAN BOTTOMS
REGIONAL WASTEWATER TREATMENT FACILITY
1 AMERICAN BOTTOMS ROAD
SAUGET, ILLINOIS 62201-1075

(618) 337-1710
FAX (618) 337-8919

CERTIFIED MAIL & ELECTRONIC MAIL
RETURN RECIEPT REQUESTED
7004 1350 0005 0762 4376

May 7, 2012

Mr. Brett Shank
Environmental Specialist
Solutia Inc. - W.G. Krummrich Plant
500 Monsanto Avenue
Sauget, Illinois 62206-1198

Subject: Typographical Error in Discharge Permit No. 10C-105

Dear Mr. Shank:

While reviewing your permit, 10C-105, we discovered a typographical error in Part 4.E.6. This part describes the monitoring parameters and frequencies for the site remediation locations, SVE Site-13 and TSVE Site-14. It was our intention to require sampling and testing for benzene at both locations, but only require testing for acrolein at Site 14. According to the permit Solutia was required to test for acrolein at Site 13, but testing for benzene was not required. Benzene is the main constituent of concern at Site 13 so it is important that monitoring for this parameter occurs.

Please see the attached permit that corrects the typographical errors described above and incorporates our original intentions and.

We apologize for any confusion. Please contact me at (618) 337-9749 or at Adamr@AmericanBottoms.com with any comments or questions regarding this matter.

Sincerely,

Adam Rossel
Pretreatment Coordinator

VILLAGE OF SAUGET

AMERICAN BOTTOMS REGIONAL

WASTEWATER TREATMENT FACILITY

WASTEWATER DISCHARGE PERMIT

FOR

SOLUTIA INC.

PERMIT NO. 10C-105

AMERICAN BOTTOMS
REGIONAL WASTEWATER TREATMENT FACILITY
1 AMERICAN BOTTOMS ROAD
SAUGET, ILLINOIS 62201-1075

(618) 337-1710
FAX (618) 337-8919

May 7, 2012

Mr. Wojciech Klim
Plant Manager
Solutia Inc. - W.G. Krummrich Plant
500 Monsanto Avenue
Sauget, Illinois 62206-1198

Wastewater Discharge Permit No. 10C-105

Dear Sirs:

In accordance with all the terms and conditions of Ordinance 632 of the Village of Sauget; the 1977 Regional Agreement as amended; Section 46 of the Illinois Environmental Protection Act of 1970 (Ill. Rev. Stat. 1987. Ch. 1111/2, Sec. 1046) as amended; and Ill. Rev. Stat. 1987, Ch 24, Sec. 11-141-7; permission is hereby granted to Solutia Inc., operating under the Standard Industrial Classification (SIC) Code Nos. 2819, 2842, and 2869, and subject to the National Categorical Pretreatment Standard (NCPS) No. 40 CFR 414, Subpart H, to discharge industrial wastewater into sewer lines tributary to the American Bottoms Regional Wastewater Treatment Plant (ABRWTP) in accordance with and subject to the provisions of attached American Bottoms Regional Wastewater Discharge Permit No. 10C-105 ("Permit").

This Permit is modified to correct a typographical error in permit 10C-105. This Permit modification is in accordance with the Village of Sauget Ordinance 632 Part 4, Section 4.10. Please affix the modified sections to your current permit.

Nothing herein shall be construed as a permit or as permission for the permittee to violate the provisions of any sewer use ordinance in effect within the jurisdiction of any unit of local government in which the permittee's facility is located.

This Permit revision will expire on March 1, 2015.

VILLAGE OF SAUGET

By: Heather Faragher
Executive Director

PART 4 - EFFLUENT LIMITATIONS, SAMPLING AND TESTING REQUIREMENTS

A. Local Limits: The Village of Sauget reserves the right, in Ordinance 632 and as amended, to establish limitations or requirements on discharges to the wastewater disposal system if deemed necessary to comply with the objectives presented in Section 1.4 of the Ordinance.

Parameter	Limitations	Effective Date
Total Kjeldahl Nitrogen (TKN)	9,000 lbs/day (7-day Moving average)	November 1, 2010

Total Kjeldahl Nitrogen (TKN) is the concentration or mass of Nitrogen, as measured by an analytical method for TKN approved by USEPA in 40 CFR 136.

TKN Temporary Variance

A temporary variance may be granted by the General Manager when necessary to allow a Discharge of TKN at levels in excess of the discharge limitations in section 4.A, above, up to a maximum TKN discharge of 15,000 lbs/day. A TKN temporary variance may be granted for a period of not more than two consecutive calendar days. The TKN temporary variance is for the purpose of addressing temporary shutdowns and start-ups of industrial production processes that generate an elevated Discharge of TKN at the Solutia – W.G. Krummrich Plant. A TKN temporary variance does not authorize a Bypass of pretreatment units.

The decision whether to grant a TKN temporary variance shall be within the sole discretion of the General Manager, using best professional judgment and in consideration of acceptable ambient and operational conditions, including but not limited to, the availability of adequate storage capacity at the POTW for the TKN discharge.

A TKN temporary variance may be requested by prior verbal notice to the General Manager and shall be confirmed in writing. No discharge above the TKN limitations in section 4.A, above, is authorized without the prior approval of the General Manager or his designee.

TKN temporary variances shall be limited to a maximum duration of 12 discharges within any 360-day period. The amount of TKN discharged during the authorized period of a TKN temporary variance will not be used for purposes of determining compliance with the TKN limitations in section 4.A, above.

B. State Limits: These limits are stated in 35 Ill. Adm. Code Part 307. This Part 307 places restrictions on the types, concentrations, and quantities of contaminants which can be discharged into sewer systems in the State.

Limitations (mg/l)

Parameters	Monthly Avg. (mg/l)	Daily Composite (mg/l)	Grab sample (mg/l)	Applicable Monitoring Location
Mercury	0.003	0.006	0.015	1AA
Cyanide (Total)	--	--	10	1AA

Any sample tested shall not release more than 2 mg/l of cyanide when tested at a pH of 4.5 and at a temperature of 66°C (150°F) for a period of 30 minutes.

The mercury limitation shown is the alternate limitation based on 35 Illinois Adm. Code 307.1102(c). Subject to the averaging rule of Ill Adm. Code 304.104, the monthly average shall be the numerical average of all daily composites taken during a calendar month. A monthly average must be based on at least three daily composites.

C. Site Specific Limits: [RESERVED]

D. National Categorical Pretreatment Standards (NCPS):Solutia's operations are subject to 40 CFR 414 - Organic Chemicals, Plastics, and Synthetic Fibers (OCPSF), Subpart H (Specialty Organic Chemicals), which has a final compliance date for Pretreatment Standards for Existing Sources (PSES) of November 5, 1990. Sources must comply with 40 CFR Part 403 and achieve discharges not exceeding the quantity (mass) determined by multiplying the process wastewater flow subject to the OCPSF regulation times the concentration listed in the regulation, subject to application of the Combined Wastestream Formula pursuant to 40 CFR part 403.6(e). The Village of Sauget, as the local Control Authority, hereby exercises its discretion to calculate and apply a fixed alternative mass limit applicable to all regulated and unregulated process flows as set forth below. The applicable regulatory concentration reference values and the mass limits for your facility, determined by using average flow data you have previously provided, are set forth as follows:

NCPS - 40 CFR 414	Regulatory Concentration Reference Values (ug/l)		Plant Mass Limits (lbs/day)	
Parameter	Max. One Day	Max. Mo. Avg.	Max. One Day	Max. Mo. Avg.
1,1,1-Trichloroethane	59	22	0.19	0.069
1,1,2-Trichloroethane	127	32	0.398	0.10

Solutia Permit Modification
Permit 10C-105

NCPS - 40 CFR 414	Regulatory Concentration Reference Values (ug/l)		Plant Mass Limits (lbs/day)	
Parameter	Max. One Day	Max. Mo. Avg.	Max. One Day	Max. Mo. Avg.
1,1-Dichloroethane	59	22	0.19	0.069
1,1-Dichloroethene	60	22	0.19	0.069
1,2,4-Trichlorobenzene	794	196	0.245	0.0604
1,2-Dichlorobenzene	794	196	2.49	0.615
1,2-Dichloroethane	574	180	1.80	0.564
1,2-Dichloropropane	794	196	2.49	0.615
1,2-trans-Dichloroethene	66	25	0.21	0.078
1,3-Dichlorobenzene	380	142	1.19	0.445
1,3-Dichloropropene	794	196	2.49	0.615
1,4-Dichlorobenzene	380	142	1.19	0.445
2-Nitrophenol	231	65	0.0712	0.020
4,6-Dinitro-o-cresol	277	78	0.0854	0.024
4-Nitrophenol	576	162	0.178	0.0499
Acenaphthene	47	19	0.014	0.0059
Anthracene	47	19	0.014	0.0059
Benzene	134	57	0.420	0.18
Bis (2-ethylhexyl) phthalate	258	95	0.0795	0.029
Carbon Tetrachloride	380	142	1.19	0.445
Chlorobenzene	380	142	1.19	0.445
Chloroethane	295	110	0.925	0.345
Chloroform	325	111	1.02	0.348
Di-n-butyl phthalate	43	20	0.013	0.0062
Diethyl phthalate	113	46	0.0348	0.014
Dimethyl phthalate	47	19	0.014	0.0059
Ethylbenzene	380	142	1.19	0.445
Fluoranthene	54	22	0.017	0.0068
Fluorene	47	19	0.014	0.0059
Hexachloroethane	794	196	0.245	0.0604
Hexachlorobenzene	794	196	0.245	0.0604
Hexachlorobutadiene	380	142	0.117	0.0438
Methyl Chloride	295	110	0.925	0.345
Methylene Chloride	170	36	0.533	0.11
Naphthalene	47	19	0.014	0.0059
Nitrobenzene	6402	2237	1.974	0.6897

Effective May 7, 2012

Solutia Permit Modification
Permit 10C-105

NCPS - 40 CFR 414	Regulatory Concentration Reference Values (ug/l)		Plant Mass Limits (lbs/day)	
Parameter	Max. One Day	Max. Mo. Avg.	Max. One Day	Max. Mo. Avg.
Phenanthrene	47	19	0.014	0.0059
Pyrene	48	20	0.015	0.0062
Tetrachloroethene	164	52	0.514	0.16
Toluene	74	28	0.23	0.088
Trichloroethylene	69	26	0.22	0.082
Vinyl Chloride	172	97	0.539	0.30
Total Cyanide	1200	420	N/A	N/A
Total Lead	690	320	N/A	N/A
Total Zinc	2610	1050	N/A	N/A

1. The Regulatory Concentration Reference Values are included in this Permit for reference purposes only. An exceedance of a Regulatory Concentration Value, without an exceedance of the corresponding mass limit, shall not be deemed a violation of this Permit.

2. The volatile mass limits are based on an average flow from regulated and non-regulated processes of 0.376 MGD; the semi-volatile mass limits are based on an average flow from regulated processes of 0.0370 MGD. The mass limits are calculated using the Combined Wastestream Formula as defined in 40 CFR 403.6(e)(1)(i).

3. Cyanide, lead and zinc are not regulated in OCPSF regulated streams at Solutia due to the absence of cyanide and metal-bearing waste streams as listed in 40 CFR 414.

4. Compliance with each OCPSF parameter standard will be determined by adding the mass loadings contributed by individual processes at five (5) locations designated as sites 8, 9, 10, 11, and, for volatile parameters, ACL site 12 in Part 4 - Section E.5. of this Permit.

5. The monthly average shall be the numerical average of the results of all sampling events during a calendar month. If only one sampling event occurs during a given month, the monthly average limits will apply to the results of that single sampling event.

6. Mass limits are subject to change based on changes in process flows. The regulated facility shall notify the POTW in writing at least sixty (60) days prior to any proposed material and/or substantial changes in process flows to allow for the calculation of revised limits.

Effective May 7, 2012

E. Monitoring Schedule

1. The monitoring schedule requirements are required as of the effective date of this Permit.

2. Monitoring locations are shown in the attached diagram - Figure 1, which is incorporated into and made a part of this Permit.

3. Monitoring frequencies:

Parameter (Units)	Monitoring Location	Monitoring Frequency	Sample Type
TKN (mg/L)	1-AA	See 4. below	Composite
Mercury (mg/L)	1-AA	1/6-months	Composite
Cyanide (mg/L)	1-AA	See 4. below	Grab
Flow (mgd)	1-AA	Daily	Meter
Flow (gpd)	13	Daily	Meter
Flow (gpd)	14	Daily	Meter

4. Compliance with the TKN local limit and the cyanide state limit will be determined by sampling and testing performed by the POTW. Permittee self-monitoring for TKN and cyanide is not required.

5. Monitoring frequencies for OCPSF regulated monitoring locations and parameters are as follows:

OCPSF Parameters	Sample Type	8	9	10	11	12
1,1,1-Trichloroethane	grab	M	M	M	M	M
1,1,2-Trichloroethane	grab	M	M	M	M	M
1,1-Dichloroethane	grab	M	M	M	M	M
1,1-Dichloroethene	grab	M	M	M	M	M
1,2,4-Trichlorobenzene	comp	M	M	M	M	-
1,2-Dichlorobenzene	grab	M	M	M	M	M
1,2-Dichloroethane	grab	M	M	M	M	M
1,2-Dichloropropane	grab	M	M	M	M	M
1,2-Trans-Dichloroethene	grab	M	M	M	M	M
1,3-Dichlorobenzene	grab	M	M	M	M	M
1,3-Dichloropropene	grab	M	M	M	M	M
1,4-Dichlorobenzene	grab	M	M	M	M	M
2-Nitrophenol	comp	M	M	M	M	-
4,6-Dinitro-o-cresol	comp	M	M	M	M	-

Solutia Permit Modification
Permit 10C-105

OCPSF Parameters	Sample Type	8	9	10	11	12
4-Nitrophenol	comp	M	M	M	M	-
Acenaphthene	comp	M	M	M	M	-
Anthracene	comp	M	M	M	M	-
Benzene	grab	M	M	M	M	M
Bis (2-ethylhexyl) phthalate	comp	M	M	M	M	-
Carbon Tetrachloride	grab	M	M	M	M	M
Chlorobenzene	grab	M	M	M	M	M
Chloroethane	grab	M	M	M	M	M
Chloroform	grab	M	M	M	M	M
Di-n-butyl phthalate	comp	M	M	M	M	-
Diethyl phthalate	comp	M	M	M	M	-
Dimethyl phthalate	comp	M	M	M	M	-
Ethylbenzene	grab	M	M	M	M	M
Fluoranthene	comp	M	M	M	M	-
Fluorene	comp	M	M	M	M	-
Hexachloroethane	comp	M	M	M	M	-
Hexachlorobenzene	comp	M	M	M	M	-
Hexachlorobutadiene	comp	M	M	M	M	-
Methyl Chloride	grab	M	M	M	M	M
Methylene Chloride	grab	M	M	M	M	M
Naphthalene	comp	M	M	M	M	-
Nitrobenzene	comp	M	M	M	M	-
Phenanthrene	comp	M	M	M	M	-
Pyrene	comp	M	M	M	M	-
Tetrachloroethene	grab	M	M	M	M	M
Toluene	grab	M	M	M	M	M
Trichloroethylene	grab	M	M	M	M	M
Vinyl Chloride	grab	M	M	M	M	M

Monitoring locations are identified as follows:
KEY M = Monthly Q= Quarterly '-'= Not Required

8-4ADPA/Santoflex – Sump
9-Santoflex pastilles – Trench12–ACL
10-Laboratory East
11-Laboratory West

Effective May 7, 2012

6. Monitoring frequencies for site remediation monitoring locations and parameters are as follows:

Remediation Parameters	Sample Type	13	14
1,2-Dichlorobenzene	Grab	M	M
1,2,4-Trichlorobenzene	*	M	M
1,3-Dichlorobenzene	Grab	M	M
1,4-Dichlorobenzene	Grab	M	M
2,4,5-Trichlorophenol	*	M	M
2,4,6-Trichlorophenol	*	M	M
2,4-Dichlorophenol	*	M	M
2-Chloroaniline	*	M	M
2-Chlorophenol	*	M	M
2-Nitroaniline	*	M	M
4-Nitroaniline	*	M	M
Aniline	*	M	M
Acrolein	Grab	-	M
Benzene	Grab	M	M
Chlorobenzene	Grab	M	M
Ethylbenzene	Grab	M	M
Naphthalene	*	M	M
Pentachlorophenol	*	M	M
Phenol	*	M	M
Toluene	Grab	M	M
Chloride	*	-	M

*Single grabs taken during a batch discharge may be used for semi-volatile analysis at the SVE Site-13 and TSVE Site-14 remediation sites. Where more than one grab sample is taken, all grabs will be weighted equally in the preparation of an in-lab site composite sample.

13-Soil Vapor Extraction Site (SVE)
14-Thermally Enhanced Soil Vapor Extraction Site (TSVE)

7. Time Compositing - Twenty-four hour time-composited site samples are required for all semi-volatile analysis. Single grabs may be used for volatile analysis. Where more than one grab sample is taken, all grabs will be weighted equally in the preparation of an in-lab site composite sample.

8. Site Compositing - For OCPSF compliance monitoring, sampling shall be conducted and monitoring results obtained from sites 8, 9, 10, 11 and, for volatile parameters ACL site

12, except for those sites which are not discharging on the sampling date. The individual site samples may either be analyzed as individual sites or as a flow-weighted laboratory composite of the individual sites samples.

For compliance monitoring at SVE Site 13 and TSVE Site 14 remediation sites, sampling must be conducted at each individual site. The SVE Site 13 and TSVE Site 14 samples shall be analyzed separately.

9. <u>OCPSF Flow Monitoring Reporting</u>

a. OCPSF Monitoring Events

For each OCPSF self-monitoring event, the monthly self-monitoring report shall contain the following information:

i. Sites 8 and 9 – Date, Time, depth measurement(s) (inches or feet), corresponding gallons per minute (gpm), and corresponding gallons per day (gpd);
ii. Sites 10 and 11 – Estimated average flow in gpm and gpd;
iii. Site 12
-Measured or calculated total site 12 gallons per minute and corresponding gallons per day;
-Internal flow meter measurements and calculated internal flows used in the calculation of the daily total site 12 flow;
-Other data and estimations used to calculate internal flows used in the calculation of the daily site 12 flow;
-Formulae used in the determination of calculated internal flows and total daily site 12 flow.

b. Upon request, Solutia shall provide within 24 hours the site 12 flow data information identified in 8.a.iii of this paragraph for POTW OCPSF events. This flow data information shall also be included in the Solutia monthly self-monitoring report.

c. OCPSF Monthly Flow Summary Report

The monthly self-monitoring report shall include a summary of OCPSF flow information for the calendar month including the following:

i. The monthly average total flows and dilution flows for sites 8 and 9;
ii. The monthly average total flows for sites 10 and 11;
iii. The monthly average total site 12 flow and individual dilution flows, including supporting information as follows:
-Internal flow meter measurements and calculated internal flows used in the calculation of the total monthly average site 12 flow and monthly average dilution flows;

-Other data and estimations used to calculate internal flows used in the calculation of the monthly average site 12 flow and monthly average dilution flows;

-Formulae used in the determination of calculated internal flows and total monthly average site 12 flow and monthly average dilution flows

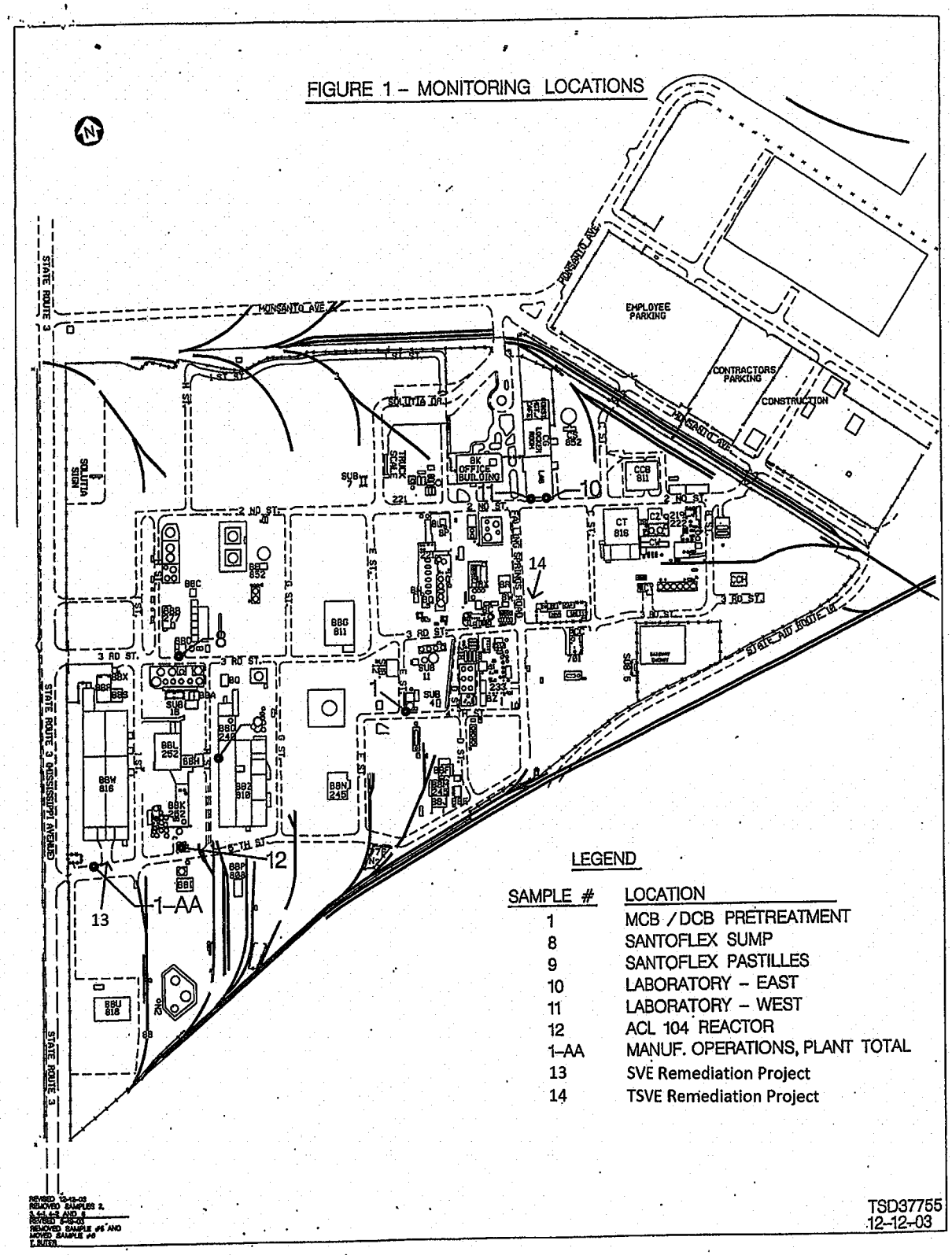
FIGURE 1 – MONITORING LOCATIONS
EMPLOYEE PARKING
CONTRACTORS PARKING
CONSTRUCTION
MONSANTO AVE
SOLUTIA DR
STATE ROUTE 3
STATE RUTE 3 MISSISSIPPI AVENUE
STATE RUTE 3
1 ST ST
2 ND ST
3 RD ST
5 TH ST
BK OFFICE BUILDING
CCB 811
CT 816
BBG 811
BBW 816
BBZ 816
BBL 252
BBN 245
BBU 816
1
8
9
10
11
12
13
14
1-AA
LEGEND
SAMPLE # LOCATION
1 MCB / DCB PRETREATMENT
8 SANTOFLEX SUMP
9 SANTOFLEX PASTILLES
10 LABORATORY – EAST
11 LABORATORY – WEST
12 ACL 104 REACTOR
1-AA MANUF. OPERATIONS, PLANT TOTAL
13 SVE Remediation Project
14 TSVE Remediation Project
TSD37755
12-12-03

AMERICAN BOTTOMS REGIONAL TREATMENT PLANT
INDUSTRIAL WASTEWATER DISCHARGE PERMIT
FACT SHEET-PERMIT MODIFICATION
FULL-SCALE SVE AND TSVE REMEDIATION PROJECTS
Date: January 5, 2012

Section 1 Description of the Permittee

Facility Name: **Solutia Inc. W.G. Krummrich Plant**
Facility Site Address: **500 Monsanto Avenue, Sauget, IL 62206**
Facility Mailing Address: **Same**

Total Number of Monitoring connections: **8**

Monitoring Location	Reg. Process Y/N	Unregulated Process Y/N	Dilution Y/N	Locally regulated Y/N
1-AA	**N**	**N**	**N**	**Y**
Site 8-OCPSF	**Y**	**N**	**Y**	**N**
Site 9-OCPSF	**Y**	**N**	**Y**	**N**
Site 10-OCPSF	**Y**	**N**	**N**	**N**
Site 11-OCPSF	**Y**	**N**	**N**	**N**
Site 12-OCPSF	**N**	**Y**	**Y**	**N**
Site 13-SVE	**N**	**Y**	**N**	**N**
Site 14-TSVE	**N**	**Y**	**N**	**N**

Brief description of the facility processes: **Organic and inorganic chemical manufacturing operations whose products are marketed worldwide, supporting the automotive, water treatment, commercial dyes and agricultural industries.**

MODIFICATION – Solutia intends to perform two full-scale remediation projects at the W.G. Krummrich site in Sauget, IL. The basis for these remediation projects are the pilot projects that were done at the facility. Soil vapor extraction (SVE) will be used to remediate the area that formerly contained the "Big Mo" benzene storage tank. Thermally enhanced soil vapor extraction (TSVE) will be used to remediate the former chlorobenzene manufacturing area. These remediation activities are not subject to 40 CFR 414 OCPSF manufacturing category that many of Solutia's operations are subject to. Therefore, the discharges from the remediation activities are not subject to the categorical limits.

The groundwater collected in the SVE area may contain volatile organic compounds (VOC) and non-aqueous phase liquids (NAPL). An oil/water separator will be utilized to remove NAPL, which will be collected and stored in 55-gallon drums for disposal. The effluent from the oil/water separator will be treated using granular activated carbon (GAC) prior to discharge to the sewer.

The vapors collected in the TSVE area may contain benzene and chlorinated volatile organic compounds (CVOC). A thermal oxidizer will be used to treat the CVOC vapors, per an IEPA air permit, producing HCL vapor. The HCL will be removed prior to atmospheric discharge using a wet scrubber. The wet scrubber employs a water spray and packed bed media to strip the hydrogen chloride from the thermal oxidizer effluent vapor stream. The resulting HCL will be discharged to the process sewer. The groundwater collected may contain CVOC and NAPL. The groundwater will be treated with a oil-water separator and air stripper prior to discharge to the sewer. The NAPL collected in the oil/water separator will be collected and stored in 55-gallon drums for offsite disposal.

Categorical Industry: Yes **X** No____
If Yes, 40 CFR 414 Subpart(s) H
SIC Code(s): **2869, 2842, and 2819**

Section 2 **Type and Quantity of Discharge - NO CHANGES TO OCPSF SITES 8, 9, 10, 11 or 12;**

The flow of the SVE remediation project is estimated at 7200 gpd with a maximum discharge of 7,200 gpd. Approximately 28,800 gpd from the wet scrubber and 7200 gpd from the air-stripper is expected for a total of 36,000 gpd from the TSVE project. Due to the treatment processes planned at these sites, very low concentrations of organics are expected from either location. The discharge from the remediation activities will flow through the fenceline location, 105 1-AA, compliance with local limits will be addressed during routine sampling at 1-AA.

Section 3 **Rationale for Permit Limits – NO CHANGES TO THIS SECTION**

Section 4 **Special Conditions**

Groundwater Remediation Projects

- **The groundwater from the SVE project must be treated by oil/water separator and granular activated carbon prior to discharge to the POTW. Other wastewater generated from the SVE project groundwater sampling and equipment decontamination wastewater from remediation activities must also be treated by the oil/water separator and granular activated carbon prior to discharge.**

- **The vapors generated from the TSVE project will be treated using a thermal oxidizer resulting in the generation of HCl vapor. The HCl will be removed from the vapor using a wet-scrubber and discharged to the sewer. Other wastewater generated from the TSVE project, sampling and equipment decontamination wastewater from remediation activities will be treated with an oil/water separator and air-stripper prior to discharge.**

- **The discharge of wastewater from the SVE project without oil/water separation and granular activated carbon treatment is subject to the bypass provisions of Section 3.9 of Ordinance 632.**

- **The discharge of wastewater from the TSVE project without oil/water separation and air-stripping is subject to the bypass provisions of Section 3.9 of Ordinance 632.**

- **The discharge of condensed vapor generated at the TSVE project without thermal oxidation and wet-scrubbing is subject to the bypass provisions of Section 3.9 of Ordinance 632.**

- **Solutia must maintain onsite and make available for inspection records of the wastestreams collected and shipped offsite for disposal.**

- **Solutia must submit discharge logs in its monthly monitoring report showing the days and volume of discharge from the SVE and TSVE remediation projects.**

- **No discharge shall occur from the SVE project until Solutia has received written approval from the Pretreatment Coordinator and installed the pretreatment system, flow monitoring device and sampling location to be used.**

- **No discharge shall occur from the TSVE project until Solutia has received written approval from the Pretreatment Coordinator and installed of the pretreatment system, flow monitoring device and sampling location to be used.**

Section 5 **Monitoring Requirements – NO CHANGES TO OCPSF OR 1AA FENCELINE MONITORING.**

MODIFICATIONS FOR REMEDIATION PROJECTS INCLUDE:

Monitoring Location: **105-13 SVE Project and 105-14 TSVE Project**
Monitoring Frequencies: **Monitoring of the SVE project discharge must be conducted monthly during any calendar month during which a discharge occurs at the SVE project.**

Monitoring of the TSVE project discharge must be conducted monthly during any calendar month during which a discharge occurs at the TSVE project.

Monitoring Parameters:

Parameter	Sample Type	13	14
1,2-Dichlorobenzene	Grab	M	M
1,2,4-Trichlorobenzene	*	M	M
1,3-Dichlorobenzene	Grab	M	M
1,4-Dichlorobenzene	Grab	M	M
2,4,5-Trichlorophenol	*	M	M
2,4,6-Trichlorophenol	*	M	M
2,4-Dichlorophenol	*	M	M
2-Chloroaniline	*	M	M
2-Chlorophenol	*	M	M
2-Nitroaniline	*	M	M
4-Nitroaniline	*	M	M
Aniline	*	M	M
Acrolein	Grab	M	M
Benzene	Grab	-	M
Chlorobenzene	Grab	M	M
Ethylbenzene	Grab	M	M
Naphthalene	*	M	M
Pentachlorophenol	*	M	M
Phenol	*	M	M
Toluene	Grab	M	M
Chloride	*	-	M

***Single grabs taken during a batch discharge shall be used for semi-volatile analysis at the SVE Site-13 and TSVE Site-14 remediation sites. Where more than one grab sample is taken, all grabs will be weighted equally in the preparation of an in-lab site composite.**

Rationale for Monitoring Frequency:
Monitoring compounds were chosen based on the expected presence as indicated by Solutia in the application and the detection during the pilot plant discharges. It is the POTW's policy to require monthly monitoring for all parameters from new discharges.

AMERICAN BOTTOMS
REGIONAL WASTEWATER TREATMENT FACILITY
1 AMERICAN BOTTOMS ROAD
SAUGET, ILLINOIS 62201-1075

(618) 337-1710
FAX (618) 337-8919

January 13, 2012

VIA ELECTRONIC MAIL

Mr. Brett Shank
Solutia Inc.
500 Monsanto Drive
Sauget, IL 62206-1198

Re: SVE Pretreatment System

Dear Mr. Shank,

Solutia submitted specifications for the pretreatment system at the SVE remediation site, which includes an oil water separator, two granular activated carbon units, an effluent flow meter, and to American Bottoms Wastewater Treatment Facility. This letter serves as the approval from the Pretreatment Coordinator of the SVE pretreatment system, flow meter, and sampling location described above, required by permit 10C-105 prior to discharge. This letter does not approve the TSVE pretreatment system. Solutia is responsible for all corrective and preventative maintenance to keep the system working properly.

In addition to the testing that is required by the permit, we request that the results from the intermediate testing that is performed to determine the efficiency of the granular activated carbon units be submitted with Solutia's monthly monitoring reports.

If you have any questions feel free to contact me at 618.337.9749.

Thank You,

Adam Rossel
Pretreatment Coordinator

APPENDIX H

Shutdown Protocol

MEMORANDUM

To:	Bill Johnson (Solutia)	**Date:**	April 14, 2011
From:	Scott Crawford (XDD)	**Cc:**	Jerry Rinaldi (Solutia) Mike Marley (XDD) XDD File (10022)
RE:	**Protocol for Completing Soil Vapor Extraction Operations and Potential Transitioning to Bioventing Mode** **Solutia Inc., W.G. Krummrich Facility, Sauget, Illinois**		

Dear Mr. Johnson,

XDD, LLC (XDD) has prepared this protocol to determine when it is appropriate to cease Soil Vapor Extraction (SVE) operations in each treatment area at the Solutia Inc. (Solutia) W.G. Krummrich facility. The objective will be to assess whether it is necessary to address any residual impacts remaining within silty sand and intermediate silty clay units at the completion of the SVE operations.

The steps in this protocol will provide the basis for making the recommendation, which will be approved by the United States Environmental Protection Agency (U.S. EPA), for shutdown of SVE or making the transition to bioventing (BV). SVE operations will continue in each treatment area until U.S. EPA approval of the corresponding recommendation to shut down or transition to BV.

It was originally proposed in Section 1.2 of the *Work Plan for Full-Scale SVE* (November 2010) that SVE operations would be considered complete when the mass removal rate of the SVE system reaches an asymptotic condition. Asymptotic conditions would be based upon the observation that the contaminant of concern (COC) vapor mass removal rate is less than 10% of the observed baseline rate for at least seven consecutive calendar days.

The decision to shut down SVE operations and potentially transition to the BV mode is now recommended to be based upon the following steps:

1. **Process Vapor Monitoring** - Conduct performance monitoring of SVE operations to assess the COC mass removal rate and cumulative COC mass removal in the vapor phase. This includes:
    a. Measurement of COC concentrations in the SVE well field vapor stream.
    b. Measurement of the total SVE well field flowrate.
    c. The COC mass removal rates for each monitoring event will be calculated based upon the COC vapor concentration and the SVE flowrate.

d. The cumulative COC mass removed will be calculated based upon the average COC mass removal rate and the length of time elapsed between each monitoring event.
e. Process vapor monitoring would be conducted initially on a weekly basis, and this frequency would be reduced as vapor concentrations and mass removal rates stabilize.
f. The cumulative COC mass removed as vapor will be plotted and provided to U.S. EPA in quarterly status updates.

2. **Assess Asymptotic Conditions** - Identify when asymptotic mass removal rate conditions are achieved:
   a. The initial peak COC vapor concentrations observed at start-up of the SVE system will be associated with the flushing of "static-equilibrium" soil gas concentrations. These initial peak level concentrations tend to decline rapidly after start-up as the initial pore volumes of soil gas are removed.
   b. For the purposes of establishing a representative baseline mass removal rate for the SVE system, an average mass removal rate will be calculated based on the first month of SVE operation.
   c. As previously discussed, SVE operations will be considered to have achieved asymptotic conditions when mass removal rates have been reduced to 10% of the baseline mass removal rates and remain at this level for a period greater than seven consecutive calendar days.
   d. The mass removal rate will not be considered to be "asymptotic" if the reason for the decrease in mass removal rates appears to be related to groundwater table elevations rising and blocking the SVE well screen.
   e. In addition, "rebound" monitoring of COC concentrations in soil vapor under "static" conditions (i.e., SVE system temporarily turned off for a period of two to four weeks) will be evaluated periodically for system optimization as "asymptotic" mass removal conditions are achieved within portions of the wellfield. Monitoring results will be evaluated to determine if significant additional mass removal can achieved by further SVE operation (either in continuous or "pulsed" mode). The potential mass removal that can be achieved with continued operation of SVE will be compared to that associated with a transition to BV mode to determine the most effective strategy.

3. **Soil Sampling** - Conduct soil sampling to assess reductions in soil concentrations and soil COC mass during SVE operations:
   a. Soil sampling is to be conducted on an annual basis (except within the intermediate silty clay which is proposed to be conducted once near the completion of SVE operations). The final soil sampling event would be conducted after asymptotic COC mass removal rates are achieved (see Step #2 above).

b. Initial COC mass estimates based on baseline soil data have been developed for each target area (refer to Table 2[1] of the *Work Plan for Full-Scale SVE*). The initial estimated mass of benzene and/or chlorobenzene is 490,000 pounds at the Big Mo Area, 27,000 pounds at the Former Benzene Pipeline Area, 250,000 pounds at the North Tank Farm Area, and 25,000 pounds at the Near Little Mo Area.
c. Soil COC mass remaining will be calculated following each annual soil sampling event and compared to the initial mass estimates to estimate percent mass reduction.
d. The COC mass reduction on the soils will also be compared to the cumulative COC mass removed based on vapor concentration data (see Step #1 above).

4. **Assess COC Mass Remaining on Soils** – Upon reaching an asymptotic condition, evaluate the impact, if any, of residual COC mass remaining on soils :
   a. Modeling will be conducted to evaluate potential impact to groundwater posed by the remaining COC mass in the unsaturated zone.
   b. Residual soil concentrations will also be evaluated to determine if there are any potential human health risks and if these are addressed by institutional controls.
   c. If a. or b. above suggest the need for further action, an evaluation to determine if BV will address the residual soil concentrations will be conducted.

5. **Recommendation for Shutdown or Transition to BV** – Prepare a report for U.S. EPA to recommend whether to shut down or transition from SVE to BV:
   a. Based on the data collection and evaluations conducted in Step #1 through #4, prepare a report for U.S. EPA to confirm that asymptotic conditions have been achieved and residual COC mass remaining does not pose unacceptable risk to groundwater or human health.
   b. Upon U.S. EPA's agreement, the SVE system would be either shut down or transitioned into the BV phase of operations (Step #6 below). Note that it will be appropriate to recommend shutdown of portions of the SVE system in a phased manner as sub-areas and/or specific depth intervals meet the performance criteria. This will be evaluated during regular system optimization events.

6. **Transition to BV Operations** – In accordance with Step #5 above, after shutdown of SVE operations, BV may be conducted to address COC mass flux from the intermediate silty clay unit. If so, BV will provide some additional reduction of the residual COC mass remaining within the upper and lower silty sand units. Annual sampling will be conducted within the intermediate silty clay unit to assess COC mass reduction (as compared to "baseline" soil concentrations at the completion of the SVE phase of operations).

[1] Table 2 of the Work Plan for Soil Vapor Extraction (SVE) was most recently updated on April 4, 2011, to include the results of four additional soil borings that were conducted in the North Tank Farm area on January 19, 2011.

7. **Completion of BV Operations** - Based on the performance of BV within the intermediate silty clay unit, a recommendation will be made to U.S. EPA regarding shutdown of BV operations.
    a. BV is not expected to yield appreciable results after one year. If, after two years of BV, no significant reduction in COC mass has occurred within the intermediate silty clay, it will be recommended to shut down the BV operations.
    b. COC mass reduction in the intermediate silty clay unit will be assessed annually using the soil sampling data. An assessment will be made regarding the benefit, if any, of ongoing BV operation.
    c. Prior to shutdown of BV operations, the impact, if any, of residual COC mass will be assessed:
        i. Modeling will be conducted to evaluate potential impact to groundwater posed by the remaining COC mass in the intermediate silty clay zone.
        ii. Residual soil concentrations will also be evaluated to determine if there are any potential human health risks and if these are addressed by institutional controls.
    d. If either c.i. or c.ii. above suggests the need, an evaluation will be conducted to determine additional actions to address the remaining residual risks. Additional actions may include monitored natural attenuation (MNA) or additional institutional controls.
    e. Upon approval by U.S. EPA, the BV operations will be shut down. Note that it will be appropriate to recommend shutdown of portions of the BV system in a phased manner as sub-areas and/or specific depth intervals meet the performance criteria.