Solutia Inc.
575 Maryville Centre Drive
Saint Louis, Missouri 63141 USA

+1.314.674.1000 *phone*
+1.314.674.1585 *fax*
www.**solutia**.com

June 4, 2012

Mr. Kenneth Bardo – LU-9J
U.S. EPA Region V
Corrective Action Section
77 West Jackson Boulevard
Chicago, IL 60604-3507

VIA OVERNIGHT MAIL

Re: Response to U.S. EPA Comments
- Construction Completion Report
- Operation, Maintenance, and Monitoring Manual
- Sampling and Analysis Plan

Soil Vapor Extraction Remedy
Big Mo & Former Benzene Pipeline Areas
Solutia Inc., W.G. Krummrich Plant, Sauget, IL

Dear Mr. Bardo:

In response to the March 29, 2012 U.S. EPA comments regarding the above-referenced documents, Solutia is submitting the attached responses to comments along with updated versions of the documents. Please replace the previously-submitted documents with the enclosed versions.

Please contact me at 314.674.3312 or gmrina@solutia.com with any questions.

Sincerely,

Gerald M. Rinaldi
Manager, Remediation Services

Enclosure

cc: Distribution List

DISTRIBUTION LIST

Response to U.S. EPA Comments
- Construction Completion Report
- Operation, Maintenance, and Monitoring Manual
- Sampling and Analysis Plan
Soil Vapor Extraction Remedy
Big Mo & Former Benzene Pipeline Areas
Solutia Inc., W.G. Krummrich Plant, Sauget, IL

Illinois EPA

Jim Moore	1021 North Grand Avenue East, Springfield, IL 62794

XDD, LLC

Dennis Keane	22 Marin Way, Stratham, NH 03885
Brant Smith, P.E.	22 Marin Way, Stratham, NH 03885

Solutia

Brett Shank	500 Monsanto Avenue, Sauget, IL 62206
Bill Johnson	575 Maryville Centre Drive, St. Louis, MO 63141

Response to USEPA Comments Dated March 29, 2012
Construction Completion Report; Operation, Maintenance, & Monitoring Manual; Sampling & Analysis Plan
Soil Vapor Extraction Remedy – Big Mo & Former Benzene Pipeline Areas
Solutia Inc., W.G. Krummrich Plant, Sauget, IL

Construction Completion Report

- On page 9 of the report, provide the site conditions that prevented the installation of SVE well location SVE-06.

  Solutia Response: *The proximity of the active loading dock located immediately north of the BBU building prevented installation of SVE-06. Existing SVE wells (SVE-2, SVE-5, SVE-10, and SVE-11) would have made moving SVE-06 to a new location result in duplicative remedial efforts. The remaining 75 shallow and 81 deep SVE wells at the active Krummrich facility were installed according to the 100% design specifications.*

- Table l presents the as-built construction details for the SVE wells and the soil geology encountered. At many locations (about one-third), the 2 to 4 foot screen interval in the shallow well lies partially or even wholly (four locations) within the intermediate silty clay layer. The objective of the SVE system was to screen the shallow wells in the more permeable sandy fill/upper sand layer for optimum effectiveness. Provide a discussion on how the wells screened within the intermediate silty clay layer will affect SVE performance.

  For well locations screened within the lower silty sand layer, the SVE wells are consistently screened from 11 to 15 feet (see Table 1). In many locations (about 40%), the lower silty sand was encountered above the upper 11 foot screen level (as much as 4.5 feet higher) but these conditions were not considered in the well design. In these instances, it would have been beneficial to extend the screen higher into the upper portion of the lower silty sand to increase the chance of the screen interval (or a portion) being above the historically high water table. The water table has been documented at very high levels recently, impacting SVE pilot testing. Up to a 5 foot screen interval was to be considered as detailed in the approved SVE system design (Section 5.3 and Table 5).

  Remediation of certain areas may not be optimal given some of the screen intervals for the SVE wells. Provide the technical rationale for constructing screen intervals as provided in Table 1 and how they may affect system performance. Well construction may have to be reassessed based on the actual performance of the system is effectively removing contaminant sources.

  Solutia Response:
  Shallow locations: In order to ensure a proper seal, it was necessary that the well screen and associated sand pack be placed approximately 2.5 feet below grade. There were several areas where the presence of the silty clay layer was close to the ground surface, within 2.0 – 3.0 feet, which made it necessary to install the SVE well partially (or in a few instances) entirely within the silty clay. In the instances where the screen and sand pack are located in both the sandy fill/upper silty sand and the silty clay, the significant difference in permeabilities between the soil types will result in the majority of flow traveling within the more permeable upper silty sand layer. These

locations may require a minor increase in vacuum to overcome any potential loss of efficiency at these locations and achieve the necessary pore volume exchanges.

There are a total of four shallow SVE locations (out of 75) that were installed entirely within the lower permeability unit due to the silty clay layer being nearer the ground surface. The alternative to installing the wells as constructed was to not install a SVE well at these locations at all, but Solutia felt it best to attempt to induce some flow at these locations. Solutia will monitor these locations for flow and vacuum during operations and also confirm the extent of treatment during the annual soil sampling program.

Deep Locations: Of the 81 locations with screened intervals in the lower silty sand zone, 10 locations have a gap greater than 3 feet between the top of the sand pack (effective screen) and the bottom of the intermediate silty clay (not including locations where poor recovery did not allow for direct observation of the silty clay layer). The design for the screened interval at all locations was based on balancing a number of operational factors:

- *Prior to installation, there was limited information associated with the location of the silty clay, and therefore assumptions were made prior to field installation to minimize the significant amount of time and expense that would have been required to custom size carbon steel screens for every location. However, in 71 of the 81 locations, this approach resulted in optimal screen placement.*
- *The potential for short circuiting through the discontinuous silty clay can be minimized by installing the screens deeper within the lower sand layer. However, this must be balanced against the ability to operate in the deep zone during times when the water table may saturate the screened interval. Due to the very limited number of locations where the pre-constructed well screen was not long enough to extend throughout the entire deep silty sand interval, Solutia elected to install the screens deeper in the sands to minimize the potential for short circuiting.*
- *In a scenario such as this, where there is a significant clay layer above the deep zone that is to be treated, and when using air injection, the predominant flow vectors towards the extraction wells is 1-D radial flow. Therefore, having a limited number of partially screened wells will have minimal impact on the effectiveness of the remedy, with any inefficiencies limited to the area immediately above the deep SVE well itself. The inefficiency can be overcome by minor increases to flow (and vacuum) at these locations, if necessary. As previously mentioned for the shallow locations, the performance data for these deep wells will be used to evaluate if operational or design changes are necessary to meet the project goals.*

- Section 4 of the report provides the construction completion summary, including detailed figures. Section 4 states that the as-built P&IDs for the SVE, condensate handling and treatment, and AI systems, and the final design and materials specifications for the two ThermOx units are presented in Appendices A, B, and C. However the P&IDs and construction details are not included as stated in the appendices "to protect the intellectual property of the equipment vendor." Please submit the P&IDs and construction details for these systems and units. This comment also applies to Appendices B, C, D, E, and F of the OM&M Manual.

The vendor may claim the submittals as confidential business information (CBI) subject to 40 C.F.R. Part 2. More information on a CBI claim can be found at the TSCA website, http://www.epa.gov/oppt/tsca8e/pubs/confidentialbusinessinformation.html

Solutia Response:
Appendices A, B, and C have been included in the re-submittal of the Construction Completion Report (CCR) dated June 2012.

- It is not clear in Figures 4a and 4b where all the SVE wells are located. There are some double designations at the southern, eastern, and northern ends of the Big Mo Area and at the Benzene Pipeline Area where the same well-series is shown as both above and below grade. The above grade portion appears to be the riser connecting to the below grade well. Please clarify in the text in Section 4.1 and revise these figures if necessary. This comment also applies to Figures 2a and 2b of the OM&M Manual.

Solutia Response:
Section 4.1 and Figures 4A and 4B of the CCR and Figures 2A and 2B of the OM&M Manual have been revised to clarify the below-grade SVE well locations and below-grade to above-grade well transitions (risers).

Operation, Maintenance, and Monitoring Manual

- See related comments above on Construction Completion Report. The complete P&IDs, process equipment, thermal oxidizer, graphic user interface, and electrical diagrams for Appendices B to F may be submitted only as hard copies or stand-alone electronic copies, to be maintained in the EPA Region 5 CBI Room. The statement for these appendices made in the initial submittal may be retained in the final submittal. Also, revise Figures 2a and 2b if necessary.

Solutia Response:
Hard and electronic copies of Appendices B through F have been included in the re-submittal of the OM&M Manual dated June 2012.

- In Section 5.1.1, identify the monitoring well(s) where water levels are to be taken. It appears that only one well will be used which is identified as BSAMWlS in Figure 2a and Table 4. This well is also known as PSMW-5 as identified in the Water Level Monitoring Log in Appendix A. EPA notes that the water level at this well in 4Q11 was 14.15 feet bgs, indicating that the lower silty sand layer may be available for treatment this year.

Solutia Response:
Due to water levels being low enough, a baseline evaluation of system operation has been

conducted in the lower silty sand.

The OM&M manual has been adjusted to clarify the monitoring location name. Solutia will also install nested piezometers targeting the fill/upper silty sand and lower silty sand layers, in the Big Mo treatment area. The monitoring program will be updated in the OM&M and the SAP once the piezometers have been installed.

- Appendix G contains the Slug Discharge Control Plan (revised October 2011). The bottom of each page states "Solutia Confidential." Is Solutia claiming this plan to be CBI?

  Solutia Response:
  The Slug Discharge Control Plan that was included in Appendix G concerning the air and water discharge permits for the facility is not necessary for proper operation, maintenance, or monitoring of the SVE system. Therefore, the Slug Discharge Control Plan has been removed from the re-submittal of the OM&M manual dated June 2012.

- Appendix H contains Solutia Standard Procedure for Management of Change (revised March 2010). The bottom of each page states "Solutia Confidential." Is Solutia claiming this standard procedure to be CBI?

  Solutia Response:
  The intent of the management of change (MOC) standard operating procedure is to ensure the requirements of the Occupational Safety and Health Administration's (OSHA's) Process Safety Management (PSM) Program (29 CFR 1910.119) are satisfied. The MOC procedure is an internal Solutia document and not necessary for proper operation, maintenance, or monitoring of the SVE system. The MOC standard operating procedure has been removed from the re-submittal of the OM&M manual dated June 2012.

Sampling and Analysis Plan

- Section 1.2.1 states that composite soil samples will be used for COC mass estimates in performance monitoring. Provide the specific procedures for composite sampling and describe how samples will be composited for VOC analyses when a dedicated grab soil sampler and VOA vial is necessary to minimize volatilization and prevent underestimation of VOC concentrations. Composite sampling is not typically allowed in VOC analyses. For consistency and data comparability, performance sampling should be conducted in the same manner as the baseline characterization (see comment below).

  Solutia Response:
  See comment below on Section 3.1.2.2.

- Figure 3 is cited in Section 1.2.2 regarding well BSAMWlS. Figure 3 does not show this well.

Please correct the text or the figure.

Solutia Response:
The text has been revised to reference Figure 2 which shows the location of BSA-MW-1S.

- Section 3.1.2.2 describes soil sampling procedures and provides the soil sample locations. For use of composite soil samples, see the comment above. Figure 3 provides the sample locations used to establish the estimated contaminant mass in the Big Mo and Former Benzene Pipeline Areas. The calculations to determine the mass are presented in Table D-1 of the SVE design and assume some NAPL mass. Based on the figures provided in the SVE Characterization Report, a few additional soil borings beyond those depicted in Figure 3 were used to characterize the areas. At Big Mo, data is presented for S0601, S0607, and DNAPL-K-8. At the Former Benzene Pipeline, data is presented for S0413 and S0428. If these locations were also used to estimate the contaminant mass, include them in Figure 3 as annual performance monitoring soil sampling locations.

  It is EPA's understanding that soil samples for annual performance monitoring will be conducted in areas within the treatment intervals that have been targeted for that year (Section 1.2.1). The targeted treatment intervals are the sandy fill/upper silty sand and lower silty sand. Section 2.2 of the SVE Characterization Report provides the soil sampling procedures used for baseline characterization of each of the treatment intervals. Continuous soil samples were collected using a Geoprobe with a two inch diameter stainless steel MacroCore. Boreholes were backfilled with hydrated bentonite chips. The soil sampling procedures used for performance monitoring should be consistent with those used in the baseline characterization. Provide these detailed soil sampling procedures in Section 3.1.2.2. Also provide a discussion on how annual sample locations will be offset to avoid disturbed areas from previous sampling.

  When calculating the mass estimates for the areas (SVE Design, Table D-1), an average over a majority of the area, excluding the pilot test area and specific hot spot areas, was calculated. Provide the exact procedure for calculating the remaining mass after each annual performance monitoring episode and how it will be compared to the baseline. Describe how the pilot test area and specific hot spot areas will be treated in this evaluation and if those calculations will be performed separately from the "average over majority of area." For example, in the lower silty sand, the calculated benzene mass of 290,000 pounds is distributed as 80,000 pounds average over majority of area, 46,000 pounds pilot test area, and 167,000 pounds in two hot spot areas.

Solutia Response:
USEPA Paragraph 1: The soil borings noted (S0601, S0607, DNAPL-K-8, S0413, S0428) were not used in the mass calculation presented in the Work Plan for Full-Scale Soil Vapor Extraction, dated November 2010 (Full-Scale Work Plan). The soil boring data used in the mass estimates for the Big Mo and Former Benzene Pipeline areas are presented in Appendix A of the Full-Scale Work Plan. Figure 3 accurately presents the soil boring locations that will be targeted for the annual soil sampling and final soil sampling events.

USEPA Paragraph 2: Section 3.1.2.2 has been updated to include the soil sampling procedures

presented in the SVE Characterization Report as requested by USEPA.

USEPA Paragraph 3: As a clarification, the SVE Design Table D-1 calculated the total mass within the Big Mo and Former Benzene Pipeline for the sandy fill/upper silty sand and lower silty sand as 80,000 and 290,000 pounds, respectively. The total mass is inclusive of both the hotspot and SVE pilot test areas, at completion of the pilot test. Therefore, it will not be necessary to specifically identify the hot spot nor the pilot test area mass reductions when comparisons are made to baseline conditions.

To calculate the mass of benzene, the SAP has been revised to include multi-level soil sampling procedures. The first approach will be consistent with the soil sampling procedures presented in the SVE Characterization Report. The second approach will consist of collection of additional samples from within the same boring targeting 2-foot discrete intervals from 3 feet below ground surface (ft bgs) to 15 ft bgs, determined by the treatment interval(s) targeted during the previous year of operation. Results from the first approach (i.e. targeting the soil depth with the highest total VOC measurement as field-screened with a photo-ionization detector), will be compared to historical mass estimates or concentrations. This approach is expected to yield a value that will likely underestimate the performance of the SVE system, as areas with the most elevated soil concentrations can be the last to show significant improvement due to the mechanics of the pore volume exchanges and the potential for NAPL in the subsurface. Results from the second approach will be used to estimate the actual remaining mass in the soil using a 2-foot vertical sampling interval throughout the target area. The average soil mass will be calculated for each discrete interval. An average of the results may be used if the subset of borings sampled annually (a maximum of 15) are equally distributed throughout the treatment area. The sampling plan after year 2 may be focused on those treatment areas that have shown sub-optimal performance relative to soil and vapor concentrations. Therefore the use of an average to calculate the benzene mass may not be applicable for the entire treatment area and in these instances an estimate may be derived or the total mass calculation will be deferred until the final sampling event, which will target all the delineation borings.

- Appendix C [Piping & Instrumentation Diagrams] is provided but does not appear to be cited in the text. Clarify if Appendix C needs to be included and address this [is] CBI material as commented above on the report and manual.

Solutia Response:
The Sampling and Analysis Plan has been modified to include a reference to Appendix C. The information provided in Appendix C is not considered CBI.

Solutia Inc.
575 Maryville Centre Drive
Saint Louis, Missouri 63141 USA

+1.314.674.1000 *phone*
+1.314.674.1585 *fax*
www.**solutia**.com

PROJECT MANAGER'S CERTIFICATION STATEMENT

CONSTRUCTION COMPLETION REPORT
SOIL VAPOR EXTRACTION REMEDY
BIG MO & FORMER BENZENE PIPELINE AREAS

SOLUTIA INC., W. G. KRUMMRICH PLANT, SAUGET, IL
U.S. EPA ID NO. ILD 000 802 702

ADMINISTRATIVE ORDER ON CONSENT
U.S. EPA DOCKET NO. R8H-5-00-003

I certify on behalf of Solutia Inc. that the above remedy has been constructed in accordance with "Work Plan for Full-Scale Soil Vapor Extraction" submitted on November 1, 2010, and approved by U.S. EPA on February 14, 2011, and with "100% Soil Vapor Extraction System Design - Big Mo & Former Benzene Pipeline Areas" submitted on September 30, 2011, except as noted and explained in the attached "Construction Completion Report." I further certify that this document and all attachments were prepared under my direction or supervision in accordance with a system designed to evaluate the information submitted. I certify that the information contained in or accompanying this submittal is true and complete. As to the portion(s) of this submittal for which I cannot personally verify the accuracy, I certify that this submittal and all attachments were prepared in accordance with procedures designed to assure that qualified personnel properly gathered and evaluated the information submitted. Based on my inquiry of the person or persons who manage the system or those directly responsible for gathering the information, or the immediate supervisor of such person(s), the information submitted is, to the best of my knowledge and belief, true, accurate and complete. I am aware that there are significant penalties for submitting false information, including the possibility of fine and imprisonment for knowing violations.

Signature

Gerald M. Rinaldi
Name

Manager, Remediation Services
Title

06/04/12
Date

Engineer's Certification Statement

Construction Completion Report

SOIL VAPOR EXTRACTION REMEDY

Big Mo & Former Benzene Pipeline Areas

SOLUTIA INC. W.G. Krummrich PLANT, SAUGET, IL
U.S. EPA ID NO. ILD 000 802 702

ADMINISTRATIVE ORDER ON CONSENT
U.S. EPA DOCKET NO. R8H-5-00-003

I, Brant A. Smith, P.E., being a Registered Professional Engineer in accordance with the Illinois Division of Professional Regulation, do hereby state that to the best of my knowledge, information, and belief the above remedy has been constructed in accordance with "Work Plan for Full-Scale Soil Vapor Extraction" submitted November 1, 2010, and approved by U.S. EPA on February 14, 2011, and with "100% Soil Vapor Extraction System Design – Big Mo & Former Benzene Pipeline Areas" submitted on September 30, 2011, except as noted and explained in the attached "Construction Completion Report".

Signature

Brant A. Smith - 062-064184
Name/License #

Senior Project Manager
Title

June 4, 2012
Date

SEAL

LICENSED PROFESSIONAL ENGINEER
BRANT A. SMITH
062-064184
STATE OF ILLINOIS

SOIL VAPOR EXTRACTION SYSTEM – CONSTRUCTION COMPLETION REPORT BIG MO & FORMER BENZENE PIPELINE AREAS

W.G. KRUMMRICH FACILITY
500 MONSANTO AVENUE
SAUGET, ILLINOIS

Prepared For:

SOLUTIA, INC
575 MARYVILLE CENTRE DRIVE
ST. LOUIS, MO 63141

Prepared By:

22 MARIN WAY
STRATHAM, NEW HAMPSHIRE 03885
TEL: (603) 778-1100
FAX: (603) 778-2121

JUNE 2012

TABLE OF CONTENTS

TABLE OF CONTENTS i

LIST OF TABLES ii

LIST OF FIGURES ii

LIST OF APPENDICIES iii

1.0 INTRODUCTION **1**

1.1 SUMMARY OF REMEDIATION APPROACH 1

1.2 REMEDIATION OBJECTIVES 2

2.0 SITE BACKGROUND INFORMATION **3**

2.1 TREATMENT AREA CHARACTERIZATION 3

2.2 GEOLOGY AND HYDROGEOLOGY 3

2.3 CONTAMINANTS OF CONCERN 4

2.4 SOIL VAPOR EXTRACTION REMEDIATION OVERVIEW 4

3.0 SUMMARY OF THE SVE REMEDIATION SYSTEM DESIGN **5**

3.1 OVERVIEW OF SVE SYSTEM DESIGN 5

4.0 CONSTRUCTION COMPLETION SUMMARY **8**

4.1 WELL AND VAPOR PROBE CONSTRUCTION DETAILS 8

4.2 SVE/AI PIPING AND WELLHEAD CONSTRUCTION DETAILS 10

4.3 SYSTEM EQUIPMENT CONSTRUCTION DETAILS 11

4.4 VAPOR TREATMENT SYSTEM CONSTRUCTION DETAILS 13

4.5 UTILITY CONSTRUCTION DETAILS 13

4.5.1 Natural Gas *13*

4.5.2 Sewer *14*

4.5.1 Electrical *14*

TABLES

Table 1 SVE Well and Vapor Probe Construction Details

FIGURES

Figure 1 Site Plan
Figure 2 Big Mo and Former Benzene Pipeline Treatment Areas
Figure 3 Soil Vapor Extraction/Air Injection System Process Flow Diagram
Figure 4A Soil Vapor Extraction Piping Layout
Figure 4B Air Injection Piping Layout
Figure 5 Well and Vapor Probe Design Cross-Section
Figure 6 Below Grade Trenching Detail
Figure 7A Soil Vapor Extraction Wellhead Design Detail
Figure 7B Combined Soil Vapor Extraction/Air Injection Wellhead Design Detail
Figure 8A Below Grade Wellhead Manifold Detail A
Figure 8B Below Grade Wellhead Manifold Detail B
Figure 8C Below Grade Wellhead Manifold Detail C
Figure 8D Below Grade Wellhead Manifold Detail D
Figure 8E Expansion Coupling Detail E
Figure 8F Main Line to Branch Line Flex Hose Connection Detail F
Figure 8G Soil Vapor Extraction and Air Injection Piping Cleanouts Detail G
Figure 9 Pipe Support Spacing Details
Figure 10 Soil Vapor Extraction/Air Injection Pipe Construction and Sewer Discharge Connection Details
Figure 11 Equipment Layout and Material Flow
Figure 12A Natural Gas Utilities Map

FIGURES (cont.)

Figure 12B Natural Gas Connection Details
Figure 13 Sewer Utilities Map
Figure 14 Electrical Utilities Map

APPENDICES

Appendix A SVE Equipment P&IDs and Construction Details
Appendix B 2,000 SCFM Thermal Oxidizer Construction Details
Appendix C 1,000 SCFM Thermal Oxidizer Construction Details

1.0 INTRODUCTION

XDD, LLC (XDD) has prepared this Soil Vapor Extraction Construction Completion Report (CCR) to present the as-built drawings for the remediation of unsaturated zone soil impacts in the Big Mo and Former Benzene Pipeline areas of the Solutia Inc. (Solutia) W.G. Krummrich Facility in Sauget, Illinois ("the site" or "the facility").

This CCR presents a summary of the final design and construction of the soil vapor extraction (SVE) system, including modifications and deviations from the final design, as presented in the 100% Soil Vapor Extraction System Design (100% SVE system design) dated September 2011. As-built layouts and design drawings included in this CCR for well and wellhead construction, system manifolding, process piping, SVE system process equipment, vapor treatment, and installation of associated utilities that were modified due to site conditions supersede the corresponding drawings presented in the 100% SVE system design document.

Refer to the 100% SVE system design document for the complete site background overview, remediation description, system design considerations, and detailed piping and equipment specifications.

1.1 SUMMARY OF REMEDIATION APPROACH

SVE will be implemented within the unsaturated portion of the Big Mo and Former Benzene Pipeline Treatment Areas [approximately 0 to 15 feet below ground surface (bgs)] using a dual-level SVE and Air Injection (AI) well network. The shallow SVE/AI wells have been designed to target the upper sandy fill/silty sand unit lying above the intermediate silty clay layer. The deep SVE/AI wells target the lower silty sand unit below the intermediate silty clay layer and above the water table. The intermediate silty clay layer will not be directly targeted by the SVE system because it has a low permeability and is not amenable to soil vapor extraction technology. Refer to **Section 2.0** for a more detailed description of the geology within the SVE target interval.

1.2 REMEDIATION OBJECTIVES

On February 26, 2008, the United States Environmental Protection Agency (USEPA) issued a Final Decision requiring Solutia to implement SVE at the site. Per the Final Decision, SVE will be applied to unsaturated zone soils impacted with volatile organic compounds (VOCs) in the Former Benzene and Chlorobenzene Storage area the Former Benzene Pipeline area. The VOCs that are considered the contaminants of concern (COCs) for SVE treatment are primarily benzene and chlorobenzene. Refer to **Figure 1** for the locations of these treatment areas.

The operation strategies and soil and vapor sampling and monitoring programs (performance monitoring, compliance monitoring, etc.) are outlined in Section 11.0 of the September 2011 100% Soil Vapor Extraction System Design (100% SVE system design), which details mass removal data evaluation and reporting. As the SVE system approaches the remedial objectives, an assessment will be conducted to determine if the SVE should be shut down and/or transitioned to bioventing (BV) mode. The protocol to determine when it is appropriate to cease SVE operations or make the transition to BV mode is presented in Appendix G of the 100% SVE system design.

2.0 SITE BACKGROUND INFORMATION

The W.G. Krummrich Facility is a 314-acre facility located at 500 Monsanto Avenue, Sauget, Illinois. The site is approximately one mile east, and in the floodplain, of the Mississippi River. The site is located in a heavily industrialized area, and has a history of approximately 100 years of industrial operations.

2.1 TREATMENT AREA CHARACTERIZATION

Soil characterization was conducted by URS Corporation (URS) in 2009 and 2010 within the proposed treatment areas. Soil cores were geologically characterized and field screened for total organic vapors (which includes VOCs). Selected soil samples were then analyzed for VOCs by USEPA Method 8260B. Results of soil characterization are presented in the *Soil Vapor Extraction Treatment Area Characterization Report* (*Characterization Report*) by URS, submitted to USEPA in November 2010.

The areas for SVE treatment are based on the *Characterization Report*. The extent of the Big Mo and Former Benzene Pipeline treatment areas are presented in **Figure 2**.

2.2 GEOLOGY AND HYDROGEOLOGY

Three soil units are observed in each of the treatment areas:

- Sandy fill/upper silty sand layer (extending from ground surface approximately 10 feet bgs).
- Intermediate silty clay layer (variable in thickness, and encountered at depths ranging from approximately 5 to 12 feet bgs). In some areas, the intermediate silty clay layer was not detected.
- Lower silty sand layer (encountered below the silty clay layer to a depth of approximately 15 feet bgs).

Geological cross-sections for the Big Mo and Former Benzene Pipeline treatment areas are presented in the 100% SVE system design document.

2.3 CONTAMINANTS OF CONCERN

At the Big Mo and Former Benzene Pipeline treatment areas, the primary COC is benzene. A summary of soil COC concentration data from the proposed treatment areas and detailed mass analysis is provided in the 100% SVE system design document.

2.4 SOIL VAPOR EXTRACTION REMEDIATION OVERVIEW

SVE is an in-situ remediation process designed to remove VOCs from unsaturated zone soils by inducing air flow through the soil pores. VOCs partition into the air stream as it passes through the soil pores, and the air containing VOCs is subsequently extracted at the SVE wellheads. In general, the conceptual design of a SVE system is based upon flushing enough air through the soils to achieve the remediation objectives. The remediation system is also equipped with the capability to inject air into select SVE wells. The AI system provides a source of clean air to the subsurface to improve the overall air flushing performance.

The SVE system design is based on data collected during the SVE pilot test conducted in 2009 and 2010. A summary of the SVE pilot test and key design parameters including target pore volume exchange rates, radius of influence (ROI) and well spacing are provided in the 100% SVE system design document.

3.0 SUMMARY OF THE SVE REMEDIATION SYSTEM DESIGN

The overall remediation approach for the site consists of SVE to remove contaminant vapors and AI to increase the efficiency of the SVE system by providing atmospheric air to the shallow and deep soil intervals. Select SVE wells are configured for operation in either extraction or injection mode (combination SVE/AI wells). The extracted vapors are to be treated using thermal oxidizers. Condensate generated by the SVE system will be treated using liquid-phase granular activated carbon (LGAC) prior to discharge to the on-site sewer. Light non-aqueous phase liquids (LNAPL) that are accumulated within the SVE system condensate are to be separated and drummed for characterization and off-site disposal. A complete summary of the SVE process flow is presented on **Figure 3**.

3.1 OVERVIEW OF SVE SYSTEM DESIGN

A summary of the key design elements of the full-scale treatment system are outlined below**.** For detailed design specifications, refer to the 100% SVE system design document. The as-built construction and installation details are described in **Section 4.0**.

Target Depth Intervals: The SVE system is designed to treat only the sandy fill/upper silty sand and lower silty sand layers as described in **Section 2.2**. Separate SVE wells (shallow and deep screen intervals) are installed in each of these soil layers.

Wellheads and Manifold Piping: Wellhead assemblies have been constructed for each SVE and combination SVE/AI well. Above-grade piping has been connected to the wells and external process piping for the thermal oxidizer (ThermOx) units and the sewer discharge to the main equipment container. Below-grade piping and trenching connect wells located in roads/access-ways to the main manifold or branch lines at above-grade locations.

Piping Heat Trace and Insulation: The SVE branch and main manifold pipes are heat-traced and insulated. The AI manifold has insulation only. Clean-outs, wellheads including the well riser pipes from the wellhead to surface grade, and lateral assemblies are not insulated. The treated condensate discharge line to the sewer is heat-traced and insulated.

SVE: The SVE system is a high-flow, low-vacuum system designed to extract soil vapors from the sandy fill/upper silty sand and lower silty sand layers. The system is designed with the capacity to operate in one of the two target soil layers at any given time. The total SVE system design capacity is 2,250 standard cubic feet per minute (scfm).

AI System: The remediation system includes an AI system. The AI system is a high-flow, low-pressure system designed to increase the efficiency of the SVE system by providing atmospheric air to the shallow and deep soil intervals. Select SVE wells can be configured for operation in either extraction or injection mode (combination SVE/AI wells). The AI system is designed with the capacity to operate in one of the two target soil layers at any given time. The total AI system design capacity is 1,500 scfm.

Condensate Treatment: Soil vapor extracted by the SVE system passes through air-moisture separator (AMS) units. Condensate (water and potentially LNAPL) collected in the AMS units is automatically transferred to an oil-water separator (OWS). LNAPL separated from the condensate is held within an internal storage tank within the OWS. When the internal LNAPL storage tank in the OWS reaches capacity, the separated LNAPL will be manually transferred into Department of Transportation (DOT)-approved 55-gallon drums to be disposed of by Solutia. Liquid from the OWS is pumped through two LGAC units placed in series prior to discharge to the facility sewer (under permit with the American Bottoms Regional Wastewater Treatment Facility).

System Controls: A programmable logic controller (PLC) controls all automated functions of the SVE system. The PLC system will allow remote monitoring and review of operating status at any time. The remote monitoring system is used to monitor flows, vacuums/pressures and operating temperatures, as well as the position of safety sensors and controls (e.g., pressure switches, level switches, motor-operated valves, etc.). The PLC also controls the appropriate system response to alarm conditions. An autodialer system transmits alarm conditions to the operator.

Vapor Treatment: The SVE process vapor passes through the AMS and SVE blowers, and is then routed to two natural-gas-fired ThermOx units operating in parallel. The ThermOx units oxidize VOCs in the extracted vapors prior to discharge to the atmosphere under an Illinois Environmental Protection Agency (IEPA) Construction Permit. A 2,000 scfm ThermOx unit (ThermOx #1) will be used throughout the entire duration of the SVE treatment in the Big Mo area. A second, 1,000 scfm ThermOx unit (ThermOx #2) supplements the first unit until initial concentrations of VOCs decline. Each of the ThermOx units has been constructed to operate with a heat exchanger and catalyst to increase future operational efficiency when VOC concentrations decline.

When benzene vapors have decreased sufficiently that operation of two ThermOx units is no longer required, ThermOx #2 will be relocated to another treatment area.

Electrical Design: Electricity has been supplied via a 600-ampere, 480-volt, three-phase overhead connection. Equipment connections include the process equipment control panel, thermal oxidizer (ThermOx) units, and heat trace.

4.0 CONSTRUCTION COMPLETION SUMMARY

The SVE system was constructed according to the design details presented in the 100% SVE system design document, with minor modifications. The following construction and installation details as well as a summary of any modifications to the system design are included in this section:

- Well and vapor probe construction and installation details, including the well and vapor probe layout and as-built screen and well materials intervals.
- SVE/AI construction installation details, including the main manifold piping system and related components required to connect the SVE/AI wells to the process equipment, and the demobilization of the SVE pilot test.
- SVE equipment construction and installation details, including the as-built piping and instrumentation diagrams (P&IDs).
- Vapor treatment system construction and installation details, including the as-built P&IDs.
- Summary of final construction and installation details of the system utilities, including natural gas, sewer, and electrical.

4.1 WELL AND VAPOR PROBE CONSTRUCTION DETAILS

The well layout and construction design presented in the 100% SVE system design document included decommissioning of former SVE pilot test wells, soil sampling, the SVE well and vapor probe locations, and construction details. The following is a description of the construction and installation details along with deviations from the 100% design.

- Pilot test wells were decommissioned in August 2011 according to the specifications outlined in the 100% SVE system design document. Well sealing forms were submitted to the Illinois Department of Public Health in September 2011.

- Installation of 75 shallow and 81 deep SVE wells was completed in September 2011. Per the 100% SVE system design, 76 shallow and 82 deep SVE wells were to be installed. The shallow and deep SVE wells at location SVE-06 were not installed due to the presence of an active loading dock in the immediate area. The remaining 75 shallow and 81 deep SVE wells were installed according to the 100% design specifications. The final SVE well and piping layout is presented on **Figures 4A and 4B**.
- At each SVE well location, soil borings were advanced using sonic drilling techniques with continuous soil sampling from 0 feet bgs up to 15 feet bgs. Soils were examined visually and characterized by the project geologist. Soil geology from each location was used to determine the screen intervals for both the shallow and deep SVE wells. The average well screen intervals for the shallow and deep SVE wells are 3.8 to 6.8 feet bgs and 11 to 15 feet bgs, respectively.
- The vapor probe screen intervals were determined based on the SVE well screens in the vicinity of each nested vapor probe set. Vapor probes were constructed with a 1-foot screen and 1-foot sump. The average vapor probe screen/sump intervals for the shallow and deep vapor probes are 4.4 to 6.3 feet bgs and 13 to 15 feet bgs, respectively.
- The 100% design identified 15 shallow and 15 deep SVE wells and 5 nested vapor probe pairs for below grade completion to access to active plant areas in the vicinity of the Big Mo and Former Benzene Pipeline Treatment Areas. Due to site access issues identified during system construction, the below grade/above grade well layout was revised (**Figure 4A**). The following is a summary of the well layout revisions:
    - Select SVE locations south of Building BBW (shallow and/or deep SVE wells SVE-69, SVE-72, SVE-73, and SVE-74) and vapor probe VP-13 were completed above grade.
    - Along the eastern edge of the treatment area, shallow and deep SVE wells SVE-18, SVE-19, SVE-44, SVE-45, and SVE-58 and vapor probe VP-03 were completed below grade to allow vehicle access.

Table 1 presents as-built construction details for the SVE wells and vapor probes including the installation date, soil geology, and construction intervals. To ensure a proper seal, it was necessary that the well screen and associated sand pack be placed approximately 2.5 feet below grade. There were several areas where the presence of the silty clay layer was close to the ground surface which made it necessary to install a subset of the SVE wells partially (or in a few instances, entirely) within the silty clay. In the instances where the screen and sand pack are located in both the sandy fill/upper silty sand and the silty clay, the significant difference in permeabilities between the soil types will result in the majority of flow traveling within the more permeable upper silty sand layer. F**igures 4A and 5** present the as-built SVE well and vapor probe layout and design details, respectively.

4.2 SVE/AI PIPING AND WELLHEAD CONSTRUCTION DETAILS

The SVE/AI piping construction and installation completion details are provided below.

- Demobilization and deconstruction of the SVE pilot test was completed in August 2011.
- As described in **Section 4.1**, several below-grade SVE well completions were modified to above-grade completions and vice versa to address concerns with plant access (**Figures 4A and 4B**). The trenching plan was modified according to the revised well layout and the below- grade trenching was completed per the 100% SVE system design (**Figure 6**).
- The SVE and combination SVE/AI wellhead assemblies were constructed and installed per the 100% SVE system design document (**Figures 7A and 7B**). The as-built below-grade to above-grade wellhead manifold details are presented on **Figures 8A through 8D**.
- The SVE and AI field manifold piping was constructed and installed per the specifications outlined in the 100% SVE system design. The as-built SVE and AI piping layouts are presented on **Figures 4A and 4B, respectively**. Piping details including expansion couplings, flex hose connections and branch line cleanouts are presented on **Figures 8E through 8G**. Pipe support spacing details are presented on **Figure 9**.

- The SVE main and branch process piping were heat-traced and insulated according to the 100% SVE system design. A single strand of heat trace (10 watts per foot) was applied to all 6-inch SVE manifolding and two strands were applied to the 12-inch SVE manifold piping. The AI main and branch process piping were insulated only (**Figure 10)**.

  The insulation saddles placed along the manifold and branch lines were retro-fitted with a banding material to secure the insulation and saddle to allow for expansion of the manifold and branch line pipes without compromising the insulation.

- Equipment installation of the SVE equipment container and ThermOx units, connection of field manifold piping to the process equipment, and the final connections between process equipment were completed in accordance with the 100% SVE system design. The equipment layout and the process flow streams are presented on **Figure 11**.

The final construction of the SVE well risers, SVE/AI wellheads and two-inch lateral assemblies were not insulated. The SVE and SVE/AI lateral assemblies were sloped as described in the 100% SVE system design. It was determined during construction that it was not necessary to insulate the risers, wellheads, and laterals because typical extraction vapor and injection air temperatures are anticipated to be above the freezing point of water.

4.3 SYSTEM EQUIPMENT CONSTRUCTION DETAILS

The SVE equipment was designed and fabricated for simultaneous treatment of the Big Mo and Former Benzene Pipeline areas. The equipment was installed in December 2011 according to the following design summary:

- The SVE equipment is housed in a 10-foot by 40-foot turn-key enclosure.
- The SVE system is designed with the capacity to provide 2,250 scfm at 10 inches of mercury (“Hg) measured at the inlet of the remediation enclosure wall and less than 1” Hg at the outlet.
- The AI component is designed to provide 1,500 scfm at 6 pounds per square inch (psi) at the remediation enclosure outlet.

- The condensate handling system is designed to separate, treat, and discharge water and/or LNAPL accumulating at a rate of 0.5 gallons per minute (gpm).

The SVE system was constructed based on the design specifications outlined in the 100% SVE design document. **Appendix A** presents the as-built P&IDs by the equipment manufacturer for the SVE, condensate handling and treatment, and AI systems.

Three modifications were incorporated into the system design:

- A temperature alarm (TIA 001) was included on the combined process air inlet to the SVE container (**Appendix A**). The temperature alarm will shut down the SVE system if a high temperature condition occurs.
- The basic processing control system (BPCS) for the PLC and the level switches were upgraded to a safety integrity level (SIL) rating of 1.0. The SIL upgrades resulted in the following modifications:
    - A PLC was supplied by the manufacturer that meets the SIL 1 rating. This modification had no effect on the programming, input/output schedule, and alarm conditions that were outlined in the 100% system design.
    - The level switches for the AMS units, the OWS, and the internal NAPL storage tank of the OWS were replaced with level transmitters (**Appendix A**). The level transmitters use microwave technology to determine the "percent full". The PLC is programmed with "percent full" levels to trigger transfer pump startup (high switch)/shutdown (low switch) and the high-high alarm. The following is a list of the level switches replaced with the level transmitters:
        - LT 101 replaced LS 101, 102, 103;
        - LT 201 replaced LS 201, 202, 203;
        - LT 301 replaced LS 301, 302, 303;
        - LT 701 replaced LS 701, 702, 703; and
        - LT 702 replaced LS 704, 705.

4.4 VAPOR TREATMENT SYSTEM CONSTRUCTION DETAILS

The thermal oxidation units were designed, fabricated, and installed in December 2011 in accordance with the 100% SVE design document.

The thermal oxidation units are designed for an initial process flow rate of 3,000 scfm using two independent units operated in parallel (ThermOx #1: capacity of 2,000 scfm, and ThermOx #2: capacity of 1,000 scfm). The ThermOx units will treat volatile organic compounds (VOCs), primarily benzene, in SVE vapor prior to discharge to the atmosphere per requirements of the Illinois Environmental Protection Agency (IEPA) Clean Air Act Permit Program (CAAPP) Construction Permit. It is anticipated that initial benzene concentrations will be at the maximum allowable concentration for the ThermOx units based on the % lower explosive limit (LEL) [up to 40% LEL, 4,800 parts per million by volume (ppmv)].

It is anticipated that, as mass removal rates decline during ongoing operation of the SVE system, ThermOx #2 unit will eventually be taken off-line and relocated to the North Tank Farm area. The final design and materials specifications for ThermOx #1 and ThermOx #2 are presented in **Appendix B** and **Appendix C**, respectively.

4.5 UTILITY CONSTRUCTION DETAILS

The utility connections that were components of the 100% SVE design document included both natural gas and sewer. Natural gas piping was installed for operation of the thermal oxidation units. The sewer line was installed to convey treated water separated from the soil vapor by the SVE equipment. The natural gas and sewer lines were constructed in accordance with the 100% SVE design document with the following exceptions.

4.5.1 *NATURAL GAS*

As per the 100% SVE system design, the natural gas supply was extended from an existing facility connection and piped to both ThermOx units. Natural gas piping was connected to an existing service within the facility and hung from existing overhead pipe supports until transitioning to 6” above ground level near the Big Mo treatment area. **Figure 12A** presents the

location of the natural gas line, with additional details presented on **Figure 12B**. Final construction deviations from the design are as follows:

- Block and bleed valving originally located at the transition from above- to below-grade supports was moved closer to the system equipment (**Figure 12B**). The construction modification was made to facilitate future access to the area by heavy equipment for eventual removal of the 1,000 scfm ThermOx unit.
- A dual natural gas regulator and visible pressure alarm system were installed along the piping to protect against regulator failure and over-pressurization of the ThemOx fuel trains (**Figure 12B**).
- Natural gas piping layout was finalized directly adjacent to the two thermal oxidizers (**Figure 11**).
- Natural gas piping installed upstream of the dual regulator system was constructed with pressure-tight welded connections. The remaining piping was completed with pressure-tight threaded and flange fittings.

4.5.2 *SEWER*

The sewer line was constructed to convey the treated water generated by the SVE equipment in accordance with the 100% design. The final piping layout is presented on **Figure 13** with additional details presented on **Figure 10**.

4.5.1 *ELECTRICAL*

The electrical service and heat trace were installed in accordance with the 100% design with one exception. To signal a potential electrical failure, visual heat trace alarms were added to the terminus of each branch line. The final electrical utility layout is presented on **Figure 14**.

TABLES

TABLE 1
SVE Well and Vapor Probe Construction Details
SVE Construction Completion Report
W.G. Krummrich Facility, Sauget, Illinois

Well ID	Date Installed	Soil Geology*			Shallow Interval				Deep Interval			
		SF/USS	ISC	LSS	Bentonite	Sand Filter Pack	Top of Screen	Bottom of Screen	Bentonite	Sand Filter Pack	Top of Screen	Bottom of Screen
		(ft)	(ft)	(ft)	(ft)	(ft)	(ft bgs)		(ft)	(ft)	(ft bgs)	
SVE Wells												
SVE-01 D	9/6/11	0.0 to 7.5	7.5 to 10.5	10.5 to 15.0	--	--	--	--	9.5 to 10.5	10.5 to 15.0	11	15
SVE-02 S/D	9/6/11	0.0 to 6.0	6.0 to 11.0	11.0 to 15.0	2.5 to 3.5	3.5 to 6.5	4	6	6.5 to 12.5	12.5 to 15.0	13	15
SVE-03 S	9/2/11	0.0 to 5.3	--	--	3.0 to 4.0	4.0 to 7.5	4.5	7.5	--	--	--	--
SVE-04 S	9/2/11	0.0 to 7.5	--	--	3.0 to 4.0	4.0 to 6.5	4.5	6.5	--	--	--	--
SVE-05 S/D	9/2/11	0.0 to 5.0	5.0 to 11.6	11.6 to 15.0	3.0 to 4.0	4.0 to 6.5	4.5	6.5	9.5 to 10.5	10.5 to 15.0	11	15
SVE-06 S/D**	8/31/11	--	--	--	--	--	--	--	--	--	--	--
SVE-07 D	8/31/11	0.0 to 5.9	5.9 to 9.2	9.2 to 15.0	--	--	--	--	9.5 to 10.5	10.5 to 15.0	11	15
SVE-08 D	9/2/2011	6.0 to 10.0	10.0 to 10.7	10.7 to 15.0	--	--	--	--	9.5 to 10.5	10.5 to 15.0	11	15
SVE-09 S/D	8/31/2011	0.0 to 2.5	2.5 to 10.8	10.8 to 15.0	1.5 to 2.5	2.5 to 5.0	3	5	9.5 to 10.5	10.5 to 15.0	11	15
SVE-10 S/D	8/31/2011	0.0 to 4.8	4.8 to 10.6	10.6 to 15.0	2.5 to 3.5	3.5 to 6.0	4	6	9.5 to 10.5	10.5 to 15.0	11	15
SVE-11 S/D	8/30/2011	0.0 to 4.0	4.0 to 8.6	8.6 to 15.0	2.5 to 3.5	3.5 to 8.0	4	8	9.5 to 10.5	10.5 to 15.0	11	15
SVE-12 S/D	8/30/11	0.0 to 7.0	7.0 to 10.0	10.0 to 15.0	1.5 to 2.5	2.5 to 5.0	3	5	9.5 to 10.5	10.5 to 15.0	11	15
SVE-13S	8/18/11	0.0 to 8.6	8.6 to 12.3	12.3 to 15.0	1.5 to 2.5	2.5 to 6.0	3	5	6.0 to 15.0	--	--	--
SVE-14 S/D	8/18/11	5.0 to 8.2	8.2 to 11.3	11.3 to 15.0	1.5 to 2.5	2.5 to 5.0	3	5	9.5 to 10.5	10.5 to 15.0	11	15
SVE-15 S/D	8/18/11	0.0 to 5.0	--	5.0 to 15.0	2.5 to 3.5	3.5 to 6.0	4	6	9.5 to 10.5	10.5 to 15.0	11	15
SVE-16 S/D	8/18/11	5.0 to 9.3	--	--	2.5 to 3.5	3.5 to 6.0	4	6	9.5 to 10.5	10.5 to 15.0	11	15
SVE-17 S/D	8/19/11	0.0 to 3.5	3.5 to 4.5	5.5 to 6.0	2.5 to 3.5	3.5 to 6.0	4	6	9.5 to 10.5	10.5 to 15.0	11	15
SVE-18 S/D	8/18/11	0.0 to 5.0	--	--	2.5 to 3.5	3.5 to 8.0	4	8	9.5 to 10.5	10.5 to 15.0	11	15
SVE-19 S/D	8/25/11	0.0 to 7.0	7.0	12.0 to 15.0	2.5 to 3.5	3.5 to 9.0	4	9	9.5 to 10.5	10.5 to 15.0	11	15
SVE-20 S/D	8/25/11	0.0 to 5.5	5.5 to 10.5	10.5 to 15.0	1.5 to 2.5	2.5 to 7.0	3	7	9.5 to 10.5	10.5 to 15.0	11	15
SVE-21 S/D	8/24-25/11	0.0 to 7.0	7.0 to 9.5	9.5 to 15.0	2.5 to 3.5	3.5 to 8.0	4	8	9.5 to 10.5	10.5 to 15.0	11	15
SVE-22 S/D	8/24/11	0.0 to 7.0	--	--	1.5 to 2.5	2.5 to 7.0	3	7	9.5 to 10.5	10.5 to 15.0	11	15
SVE-23 S/D	8/24/11	0.0 to 5.1	5.1 to 12.2	12.2 to 15.0	1.5 to 2.5	2.5 to 7.0	3	7	9.5 to 10.5	10.5 to 15.0	11	15
SVE-24 S/D	8/24/11	0.0 to 3.5	3.5 to 9.5	9.5 to 15.0	1.5 to 2.5	2.5 to 5.0	3	5	9.5 to 10.5	10.5 to 15.0	11	15
SVE-25 S/D	9/6/11	0.0 to 5.5	5.5 to 10.0	10.0 to 15.0	2.5 to 3.5	3.5 to 6.0	4	6	9.5 to 10.5	10.5 to 15.0	11	15
SVE-26 S/D	8/24/11	0.0 to 4.3	4.3 to 8.0	8.0 to 15.0	1.5 to 2.5	2.5 to 7.0	3	6	9.5 to 10.5	10.5 to 15.0	11	15
SVE-27 S/D	8/24-25/11	0.0 to 7.0	7.0 to 13.9	13.9 to 15.0	1.5 to 2.5	2.5 to 8.0	3	8	9.5 to 10.5	10.5 to 15.0	11	15
SVE-28 S/D	8/25/11	0.0 to 7.0	7.0 to 9.7	9.7 to 15.0	1.5 to 2.5	2.5 to 8.0	3	8	9.5 to 10.5	10.5 to 15.0	11	15
SVE-29 S/D	8/25/11	0.0 to 10.5	10.5 to 15.0	--	2.5 to 3.5	3.5 to 8.0	4	8	9.5 to 10.5	10.5 to 15.0	11	15
SVE-30 S/D	8/25/11	0.0 to 4.0	4.0 to 8.0	8.0 to 15.0	1.5 to 2.5	2.5 to 7.0	3	7	9.5 to 10.5	10.5 to 15.0	11	15
SVE-31 S/D	8/31/11	0.0 to 7.0	--	7.0 to 15.0	3.0 to 4.0	4.0 to 8.5	4.5	8.5	9.5 to 10.5	10.5 to 15.0	11	15
SVE-32 S/D	8/31/11	0.0 to 8.2	--	8.2 to 15.0	3.0 to 4.0	4.0 to 7.5	4.5	7.5	9.5 to 10.5	10.5 to 15.0	11	15
SVE-33 S/D	8/26/11	0.0 to 7.0	7.0 to 10.5	10.5 to 15.0	2.5 to 3.5	3.5 to 7.0	4	7	9.5 to 10.5	10.5 to 15.0	11	15
SVE-34 S/D	8/26/11	0.0 to 10.0	10.0 to 11.0	11.0 to 15.0	3.5 to 4.5	4.5 to 8.0	5	8	9.5 to 10.5	10.5 to 15.0	11	15
SVE-35 S/D	8/25/11	0.0 to 9.5	9.5 to 10.0	10.0 to 15.0	2.5 to 3.5	3.5 to 8.0	4	8	9.5 to 10.5	10.5 to 15.0	11	15
SVE-36 S/D	8/25/11	0.0 to 9.0	9.0 to 11.0	11.0 to 15.0	2.5 to 3.5	3.5 to 8.0	4	8	9.5 to 10.5	10.5 to 15.0	11	15
SVE-37 S/D	8/25/11	0.0 to 7.0	7.0 to 11.5	11.5 to 15.0	1.5 to 2.5	2.5 to 7.0	3	7	9.5 to 10.5	10.5 to 15.0	11	15
SVE-38 D	9/6/11	0.0 to 6.5	--	6.5 to 15.0	--	--	--	--	9.5 to 10.5	10.5 to 15.0	11	15
SVE-39 S/D	8/25/11	0.0 to 5.5	5.5 to 10.0	10.0 to 15.0	1.5 to 2.5	2.5 to 5.0	3	5	9.5 to 10.5	10.5 to 15.0	11	15
SVE-40 S/D	8/25/11	0.0 to 7.0	7.0 to 10.0	10.0 to 15.0	2.5 to 3.5	3.5 to 8.0	4	8	9.5 to 10.5	10.5 to 15.0	11	15
SVE-41 S/D	8/25-8/26	0.0 to 7.0	7.0 to 11.0	11.0 to 15.0	2.5 to 3.5	3.5 to 8.0	4	8	9.5 to 10.5	10.5 to 15.0	11	15
SVE-42 S/D	8/26/11	0.0 to 7.0	7.0 to 10.5	10.5 to 15.0	2.5 to 3.5	3.5 to 7.0	4	7	9.5 to 10.5	10.5 to 15.0	11	15
SVE-43 S/D	8/26/11	0.0 to 5.0	5.0 to 11.0	11.0 to 15.0	1.5 to 2.5	2.5 to 5.0	3	5	9.5 to 10.5	10.5 to 15.0	11	15
SVE-44 S/D	8/26/11	0.0 to 9.5	--	9.5 to 15.0	2.5 to 3.5	3.5 to 5.0	3	5	9.5 to 10.5	10.5 to 15.0	11	15
SVE-45 S/D	8/31/11	0.0 to 9.4	9.4	10.9 to 15.0	2.5 to 3.5	3.5 to 8.0	4	8	9.5 to 10.5	10.5 to 15.0	11	15
SVE-46 S/D	8/30/11	0.0 to 9.0	--	9.0 to 15.0	2.5 to 3.5	3.5 to 7.0	4	7	9.5 to 10.5	10.5 to 15.0	11	15
SVE-47 S/D	8/30/11	0.0 to 5.0	5.0 to 9.0	9.0 to 15.0	1.5 to 2.5	2.5 to 6.0	3	6	9.5 to 10.5	10.5 to 15.0	11	15
SVE-48 S/D	8/30/11	0.0 to 7.0	7.0 to 10.2	10.2 to 15.0	1.5 to 2.5	2.5 to 6.0	3	6	9.5 to 10.5	10.5 to 15.0	11	15
SVE-49 S/D	8/30/11	0.0 to 6.0	6.0 to 10.5	10.5 to 15.0	2.5 to 3.5	3.5 to 8.0	4	8	9.5 to 10.5	10.5 to 15.0	11	15
SVE-50 S/D	8/26/11	0.0 to 6.5	6.5 to 9.5	9.5 to 15.0	2.5 to 3.5	3.5 to 7.0	4	7	9.5 to 10.5	10.5 to 15.0	11	15
SVE-51 D	9/6/11	0.0 to 2.8	2.8 to 7.0	7.0 to 15.0	--	--	--	--	9.5 to 10.5	10.5 to 15.0	11	15
SVE-52 S/D	9/6/11	0.0 to 6.0	6.0 to 7.0	--	2.5 to 3.5	3.5 to 6.0	4	6	9.5 to 10.5	10.5 to 15.0	11	15
SVE-53 S/D	8/30/11	0.0 to 4.0	4.0 to 9.7	9.7 to 15.0	1.5 to 2.5	2.5 to 6.0	3	6	9.5 to 10.5	10.5 to 15.0	11	15
SVE-54 S/D	8/30/11	0.0 to 5.5	5.5 to 9.4	9.4 to 15.0	1.5 to 2.5	2.5 to 7.0	3	7	9.5 to 10.5	10.5 to 15.0	11	15
SVE-55 S/D	8/30/11	0.0 to 5.8	5.8 to 7.0	--	1.5 to 2.5	2.5 to 7.0	3	7	9.5 to 10.5	10.5 to 15.0	11	15
SVE-56 S/D	8/30/11	0.0 to 7.5	7.5 to 8.1	8.1 to 15.0	1.5 to 2.5	2.5 to 7.0	3	7	9.5 to 10.5	10.5 to 15.0	11	15
SVE-57 S/D	8/30/11	0.0 to 8.5	8.5 to 10.2	--	1.5 to 2.5	2.5 to 7.0	3	7	9.5 to 10.5	10.5 to 15.0	11	15
SVE-58 S/D	9/7/11	0.0 to 7.4	7.4	8.5 to 15.0	2.5 to 3.5	3.5 to 8.0	4	8	9.5 to 10.5	10.5 to 15.0	11	15
SVE-59 S/D	9/7/11	0.0 to 6.3	--	6.3 to 15.0	3.0 to 4.0	4.0 to 7.5	4.5	7.5	9.5 to 10.5	10.5 to 15.0	11	15
SVE-60 S/D	9/7/11	0.0 to 6.0	6.0 to 8.5	8.5 to 15.0	2.5 to 3.5	3.5 to 7.0	4	7	9.5 to 10.5	10.5 to 15.0	11	15

TABLE 1
SVE Well and Vapor Probe Construction Details
SVE Construction Completion Report
W.G. Krummrich Facility, Sauget, Illinois

Well ID	Date Installed	Soil Geology*			Shallow Interval				Deep Interval			
		SF/USS	ISC	LSS	Bentonite	Sand Filter Pack	Top of Screen	Bottom of Screen	Bentonite	Sand Filter Pack	Top of Screen	Bottom of Screen
		(ft)	(ft)	(ft)	(ft)	(ft)	(ft bgs)		(ft)	(ft)	(ft bgs)	
SVE Wells (continued)												
SVE-61 S/D	8/30/11	0.0 to 4.8	4.8 to 10.4	10.4 to 15.0	1.5 to 2.5	2.5 to 7.0	3	7	9.5 to 10.5	10.5 to 15.0	11	15
SVE-62 S/D	8/30/11	0.0 to 4.9	4.9 to 9.1	9.1 to 15.0	1.5 to 2.5	2.5 to 7.0	3	7	9.5 to 10.5	10.5 to 15.0	11	15
SVE-63 S/D	9/6/11	0.0 to 5.0	5.0 to 6.0	11.0 to 15.0	2.5 to 3.5	3.5 to 6.0	4	6	9.5 to 10.5	10.5 to 15.0	11	15
SVE-64 S/D	9/7/11	0.0 to 6.5	6.5 to 8.0	8.0 to 15.0	2.5 to 3.5	3.5 to 7.0	4	7	9.5 to 10.5	10.5 to 15.0	11	15
SVE-65 S/D	9/6/11	0.0 to 12.5	12.5 to 14.0	14.0 to 15.0	3.5 to 4.5	4.5 to 8.0	5	8	9.5 to 10.5	10.5 to 15.0	11	15
SVE-66 S/D	8/31/11	0.0 to 7.0	7.0 to 13.0	13.0 to 15.0	2.5 to 3.5	3.5 to 8.0	4	8	9.5 to 10.5	10.5 to 15.0	11	15
SVE-67 S/D	9/6/11	0.0 to 6.0	6.0 to 8.5	8.5 to 15.0	3.0 to 4.0	4.0 to 6.5	4.5	6.5	9.5 to 10.5	10.5 to 15.0	11	15
SVE-68 S/D	9/7/11	0.0 to 6.0	--	6.0 to 15.0	3.0 to 4.0	4.0 to 7.5	4.5	7.5	9.5 to 10.5	10.5 to 15.0	11	15
SVE-69 S/D	9/8/11	0.0 to 4.5	4.5 to 7.4	7.4 to 15.0	2.5 to 3.5	3.5 to 6.0	4	6	9.5 to 10.5	10.5 to 15.0	11	15
SVE-70 S/D	9/8/11	0.0 to 4.5	4.5 to 10.1	10.1 to 15.0	2.5 to 3.5	3.5 to 7.0	4	7	9.5 to 10.5	10.5 to 15.0	11	15
SVE-71 S/D	9/9/11	0.0 to 3.0	--	13.0 to 15.0	2.5 to 3.5	3.5 to 7.0	4	7	9.5 to 10.5	10.5 to 15.0	11	15
SVE-72 S/D	9/7/11	0.0 to 7.0	7.0 to 8.0	8.0 to 15.0	3.0 to 4.0	4.0 to 6.5	4.5	6.5	9.5 to 10.5	10.5 to 15.0	11	15
SVE-73 S/D	9/7/11	0.0 to 5.7	5.7 to 9.0	9.0 to 15.0	3.0 to 4.0	4.0 to 5.5	4.5	5.5	9.5 to 10.5	10.5 to 15.0	11	15
SVE-74 D	9/7/11	0.0 to 7.4	7.4 to 10.0	10.0 to 15.0	--	--	--	--	9.5 to 10.5	10.5 to 15.0	11	15
SVE-75 D	9/9/11	0.0 to 3.5	3.5 to 10.5	10.5 to 15.0	--	--	--	--	9.5 to 10.5	10.5 to 15.0	11	15
SVE-76 D	9/8/11	0.0 to 8.5	--	8.5 to 15.0	--	--	--	--	9.5 to 10.5	10.5 to 15.0	11	15
SVE-77 D	9/8/11	0.0 to 10.0	--	10.0 to 15.0	--	--	--	--	9.5 to 10.5	10.5 to 15.0	11	15
SVE-78 S/D	9/9/11	0.0 to 6.0	6.0 to 10.8	10.8 to 15.0	3.0 to 3.5	3.5 to 7.0	4	7	9.5 to 10.5	10.5 to 15.0	11	15
SVE-79 S/D	9/8/11	0.0 to 2.4	2.4 to 10.0	10.0 to 15.0	2.5 to 3.5	3.5 to 7.0	4	7	9.5 to 10.5	10.5 to 15.0	11	15
SVE-80 S/D	9/9/11	0.0 to 3.5	3.5 to 11.6	11.6 to 15.0	3.0 to 3.5	3.5 to 7.0	4	7	9.5 to 10.5	10.5 to 15.0	11	15
SVE-81 S/D	9/8/11	0.0 to 6.0	6.0 to 10.0	10.0 to 15.0	2.5 to 3.5	3.5 to 7.0	4	7	9.5 to 10.5	10.5 to 15.0	11	15
SVE-82 S/D	9/9/11	0.0 to 6.0	6.0 to 10.0	10.0 to 15.0	3.0 to 3.5	3.5 to 7.0	4	7	9.5 to 10.5	10.5 to 15.0	11	15
SVE-83 S/D	9/8/11	--	6.0 to 10.8	10.8 to 15.0	3.0 to 4.0	4.0 to 7.5	4.5	7.5	9.5 to 10.5	10.5 to 15.0	11	15
SVE-84 S/D	9/9/11	0.0 to 6.8	6.8 to 7.3	7.3 to 15.0	3.0 to 3.5	3.5 to 7.0	4	7	9.5 to 10.5	10.5 to 15.0	11	15
SVE-85 S/D	9/8/11	0.0 to 2.0	2.0 to 11.7	11.7 to 15.0	1.5 to 2.5	2.5 to 6.0	3	6	9.5 to 10.5	10.5 to 15.0	11	15
Vapor Probes												
VP-01 S/D	9/2/11	0.0 to 7.9	7.9 to 11.5	11.5 to 15.0	3.0 to 4.0	4.0 to 6.0	4.5	5.5	6.0 to 12.5	12.5 to 15.0	13	15
VP-02 S/D	8/22/11	0.0 to 8.2	8.2 to 10.0	10.0 to 15.0	3.0 to 4.0	4.0 to 7.0	4.5	6.5	7.0 to 12.5	12.5 to 15.0	13	15
VP-03 S/D	8/22/11	0.0 to 8.5	8.5 to 9.5	9.5 to 15.0	3.0 to 4.0	4.0 to 7.0	4.5	6.5	7.0 to 12.5	12.5 to 15.0	13	15
VP-04 S/D	8/22/11	0.0 to 3.6	3.6 to 9.2	9.2 to 15.0	2.5 to 3.5	3.5 to 6.5	4	6	6.5 to 12.5	12.5 to 15.0	13	15
VP-05 S/D	8/22/11	0.0 to 7.2	7.2 to 11.3	11.3 to 15.0	3.0 to 4.0	4.0 to 7.0	4.5	6.5	7.0 to 12.5	12.5 to 15.0	13	15
VP-06 S/D	8/23/11	0.0 to 8.0	8.0 to 10.0	10.0 to 15.0	2.5 to 3.5	3.5 to 6.5	4	6	6.5 to 12.5	12.5 to 15.0	13	15
VP-07 S/D	8/23/11	0.0 to 5.5	5.5 to 6.2	6.2 to 15.0	3.5 to 4.5	4.5 to 7.5	5	7	7.5 to 12.5	12.5 to 15.0	13	15
VP-08 S/D	8/23/11	0.0 to 4.6	4.6 to 9.4	9.4 to 15.0	3.0 to 4.0	4.0 to 7.0	4.5	6.5	7.0 to 12.5	12.5 to 15.0	13	15
VP-09 S/D	8/23/11	0.0 to 5.6	5.6 to 9.5	9.5 to 15.0	2.5 to 3.5	3.5 to 6.5	4	6	6.5 to 12.5	12.5 to 15.0	13	15
VP-10 S/D	8/24/11	0.0 to 5.0	5.0 to 9.0	9.0 to 15.0	2.5 to 3.5	3.5 to 6.5	4	6	6.5 to 12.5	12.5 to 15.0	13	15
VP-11 S/D	8/23/11	0.0 to 6.0	6.0 to 9.5	9.5 to 15.0	3.0 to 4.0	4.0 to 7.0	4.5	6.5	7.0 to 12.5	12.5 to 15.0	13	15
VP-12 S/D	9/7/11		--		3.5 to 4.5	4.5 to 7.5	5	7	7.5 to 12.5	12.5 to 15.0	13	15
VP-13 S/D	9/8/11	0.0 to 6.0	6.0 to 7.0	7.0 to 15.0	3.5 to 4.5	4.5 to 7.5	5	7	7.5 to 12.5	12.5 to 15.0	13	15
VP-14 S/D	8/24/11	0.0 to 4.0	4.0 to 8.5	8.5 to 15.0	1.5 to 2.5	2.5 to 5.5	3	5	5.5 to 12.5	12.5 to 15.0	13	15
VP-15 S/D	8/24/11	0.0 to 5.2	5.2 to 9.5	9.5 to 15.0	3.0 to 4.0	4.0 to 7.0	4.5	6.5	7.0 to 12.5	12.5 to 15.0	13	15
VP-16 S/D	8/24/11	0.0 to 6.0	6.0 to 8.5	8.5 to 15.0	3.0 to 4.0	4.0 to 7.0	4.5	6.5	7.0 to 12.5	12.5 to 15.0	13	15

= wells/vapor probes completed above grade
= wells/vapor probes completed below grade

SF/USS = sandy fill/upper silty sand
ISC = intermediate silty clay
LSS = lower silty sand
ft bgs = feet below ground surface
* Soil geology is an estimate and is based on level of recovery
** Shallow and deep wells not installed due to presence of active loading dock in the immediate area.

Notes:
1. Vapor probe screens include 1 ft screen and 1 ft sump
2. Carbon steel risers installed to 6 inches above ground surface, except for below grade wells

FIGURES

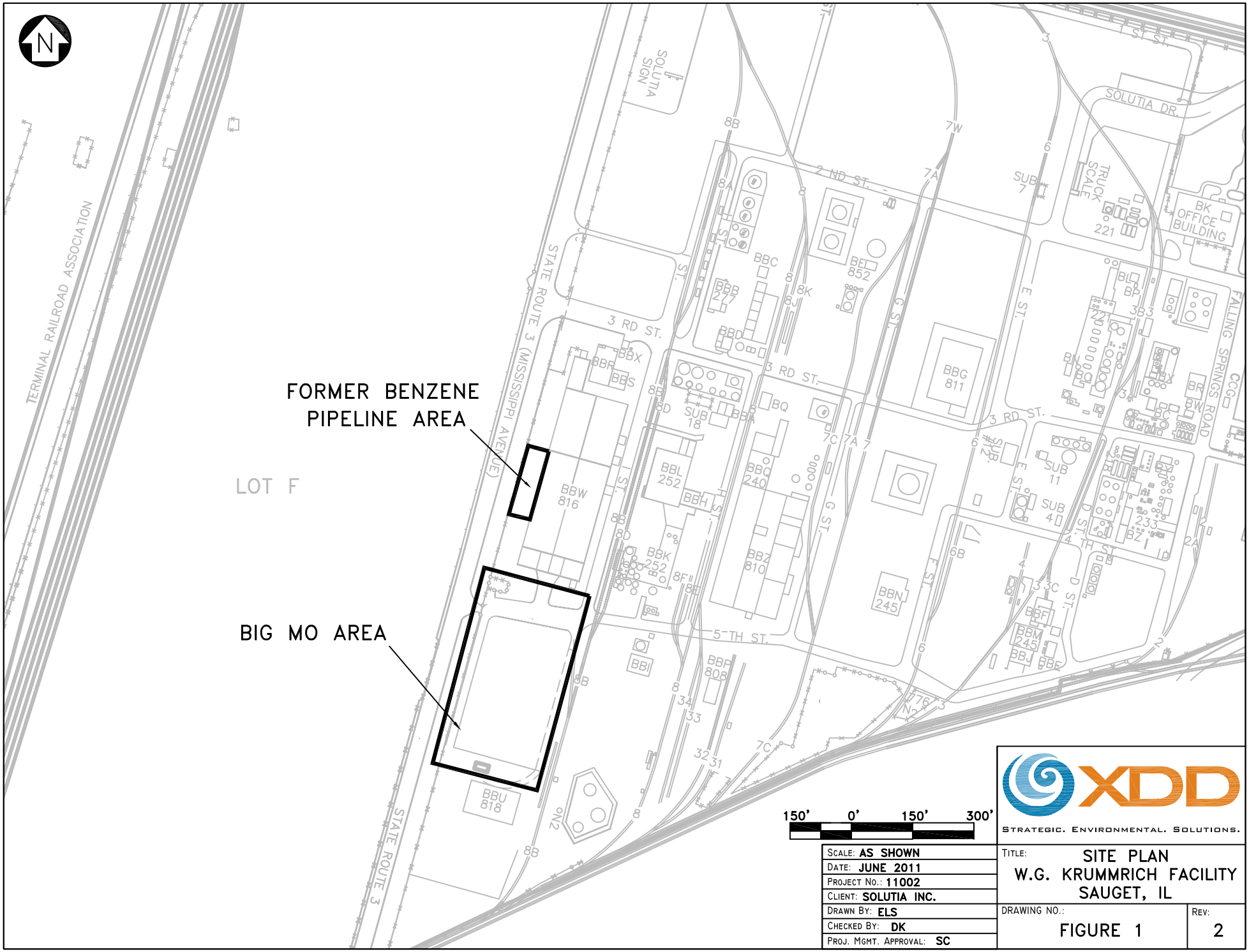

150' 0' 150' 300'

XDD
STRATEGIC. ENVIRONMENTAL. SOLUTIONS.

SCALE: AS SHOWN	TITLE: SITE PLAN W.G. KRUMMRICH FACILITY SAUGET, IL
DATE: JUNE 2011	
PROJECT NO.: 11002	
CLIENT: SOLUTIA INC.	
DRAWN BY: ELS	DRAWING NO.: FIGURE 1
CHECKED BY: DK	REV: 2
PROJ. MGMT. APPROVAL: SC	

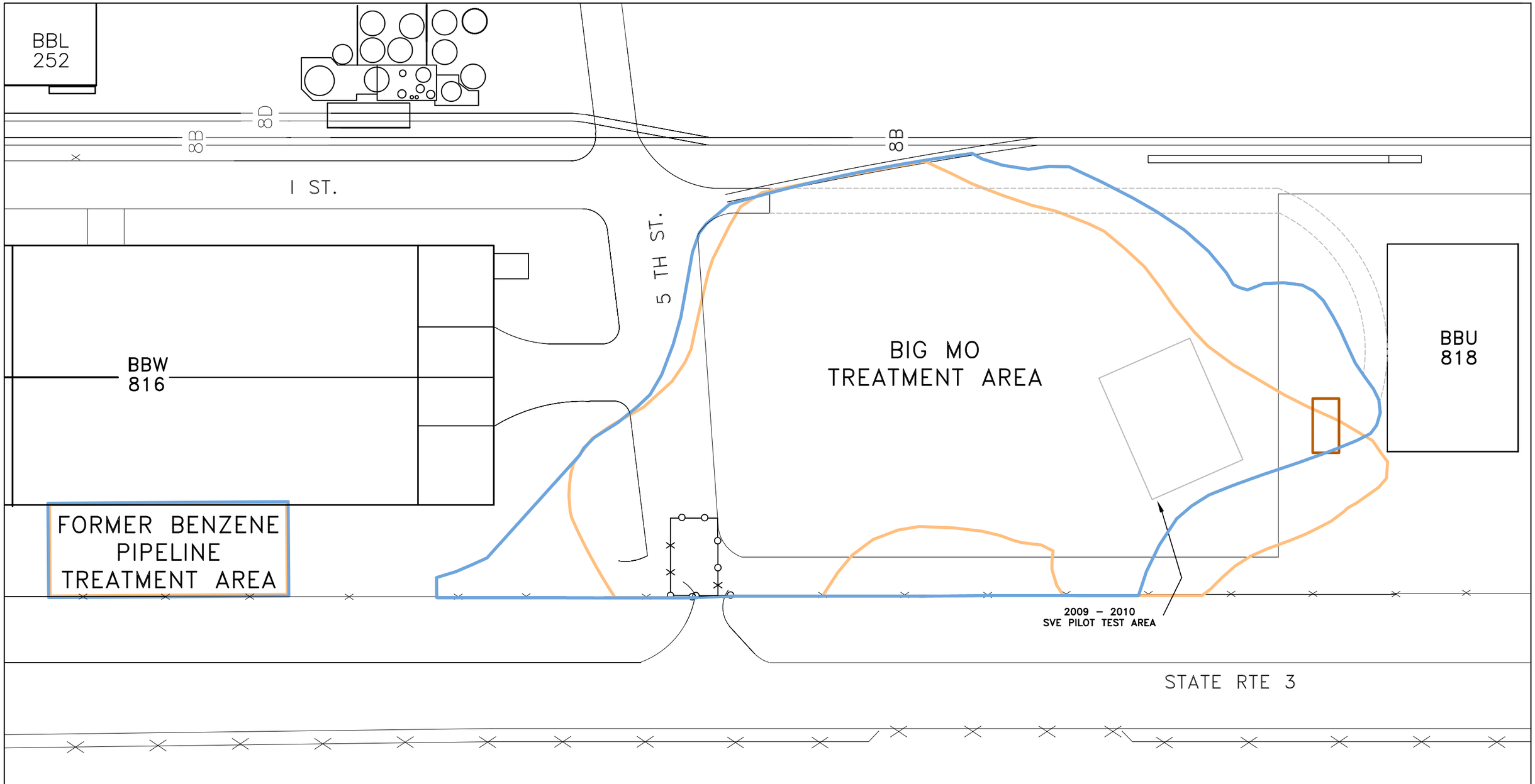

LEGEND:

- LOADING DOCK
- LOCATION OF VEHICLE ACCESS ROAD
- EXTENT OF SHALLOW TARGET TREATMENT AREA
- EXTENT OF DEEP TARGET TREATMENT AREA

30' 0' 30' 60'

XDD
STRATEGIC. ENVIRONMENTAL. SOLUTIONS.

SCALE: AS SHOWN	TITLE: BIG MO AND FORMER BENZENE PIPELINE TREATMENT AREAS W.G. KRUMMRICH FACILITY SAUGET, IL
DATE: FEBRUARY 2012	
PROJECT NO.: 11002	
CLIENT: SOLUTIA INC.	
DRAWN BY: LBC	DRAWING NO.: FIGURE 2
CHECKED BY: ELS	REV: 3
PROJ. MGMT. APPROVAL: DK	

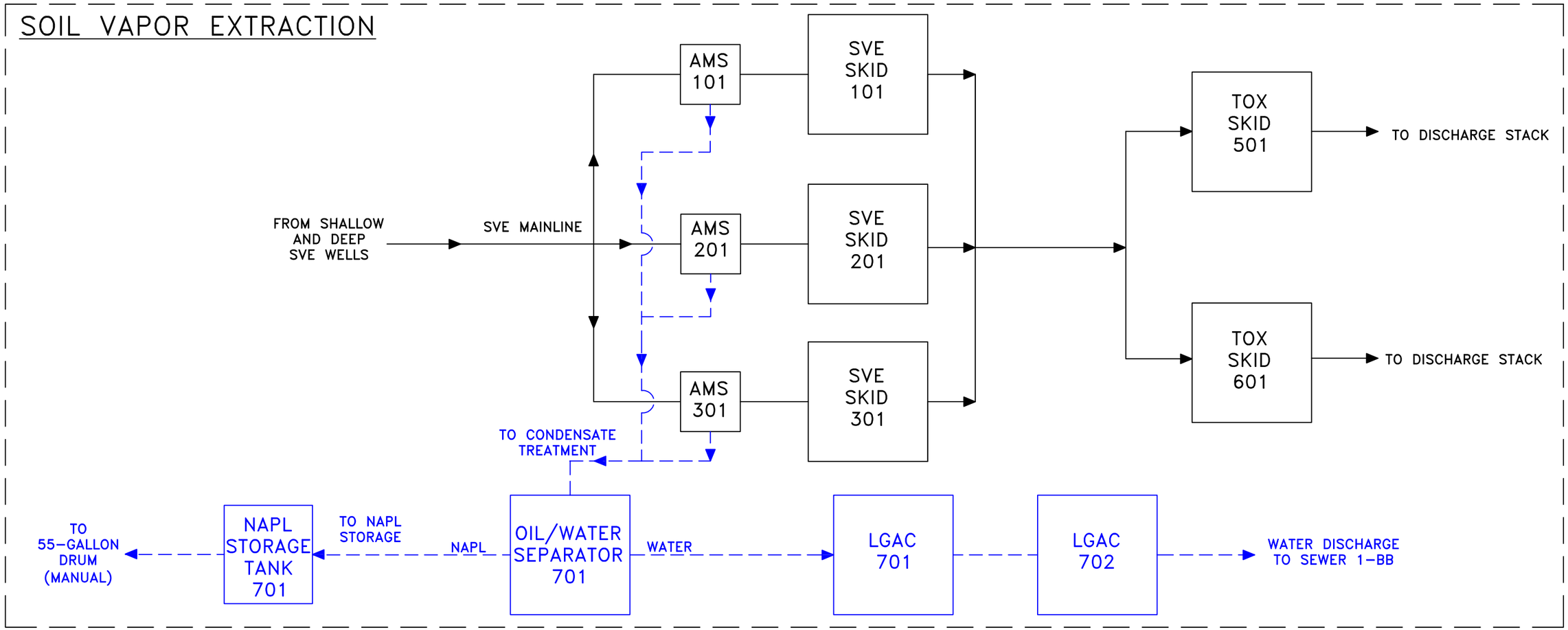

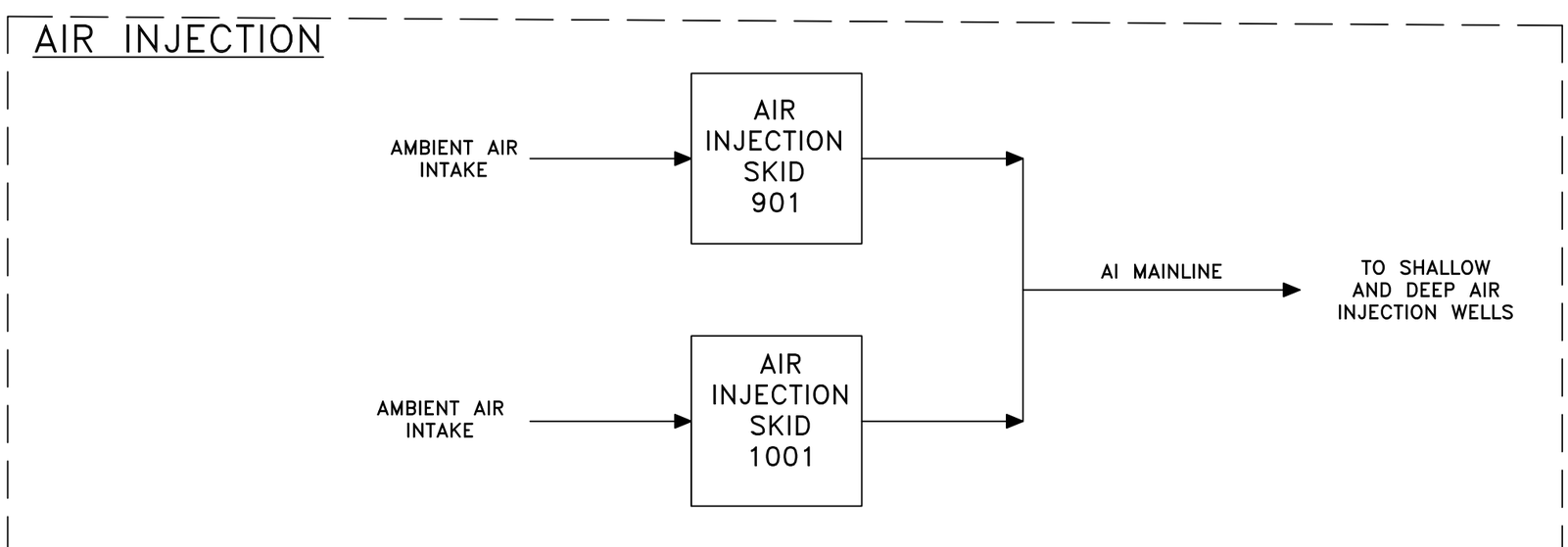

LEGEND:

AIR FLOW DIRECTION

LIQUID FLOW DIRECTION

NOTES:

AMS	Air Moisture Separator
LGAC	Liquid-Phase Granular Activated Carbon
NAPL	Non-Aqueous Phase Liquid
SVE	Soil Vapor Extraction
TOX	Thermal Oxidizer

XDD
STRATEGIC. ENVIRONMENTAL. SOLUTIONS.

SCALE: NOT TO SCALE	TITLE: SOIL VAPOR EXTRACTION/AIR INJECTION SYSTEM PROCESS FLOW DIAGRAM W.G. KRUMMRICH FACILITY SAUGET, IL
DATE: FEBRUARY 2012	
PROJECT NO.: 11002	
CLIENT: SOLUTIA INC.	
DRAWN BY: ELS	DRAWING NO.: FIGURE 3
CHECKED BY: DK	REV: 1
PROJ. MGMT. APPROVAL: SCC	

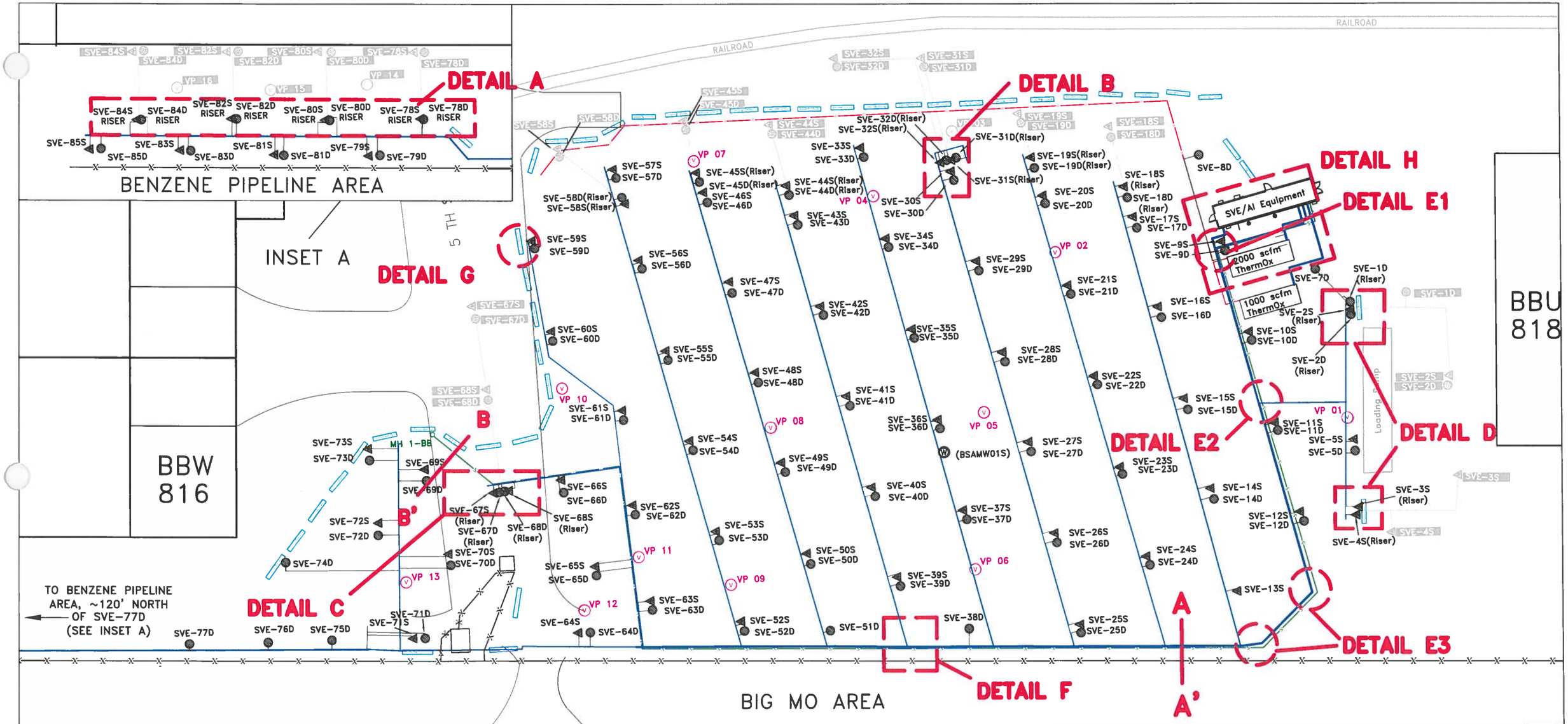

LEGEND

- = ABOVE GRADE DEEP WELL
- = ABOVE GRADE SHALLOW WELL
- = BELOW GRADE DEEP WELL
- = BELOW GRADE SHALLOW WELL
- = MONITORING WELL
- = VAPOR PROBE
- = BELOW GRADE VAPOR PROBE
- = SEWER MANHOLE
- = FENCELINE
- = GAS LINE
- = BELOW GRADE 2" CARBON STEEL PIPING (APPROXIMATE LOCATION)
- = 2" ABOVE GRADE SCHEDULE 40 PVC PIPING
- = 6" ABOVE GRADE INSULATED AND HEAT TRACED SVE SCHEDULE 40 PVC PIPING
- = 12" ABOVE GRADE INSULATED AND HEAT TRACED SVE SCHEDULE 40 PVC PIPING
- = JERSEY BARRIER
- = SEWER LINE
- SVE-67D = BELOW GRADE WELL/VAPOR PROBE ID

NOTES:

- ALL ABOVE GRADE BRANCH AND MANIFOLD PIPING ARE HEAT TRACED AND INSULATED
- LOCATION OF BELOW GRADE TO ABOVE GRADE SVE WELL TRANSITIONS ARE INDICATED WITH THE "RISER" DESIGNATION ON THE WELL ID
- ALL MANIFOLDING DETAILS ARE PRESENTED ON FIGURES 8A THROUGH 8D
- CLEANOUTS ARE INSTALLED AT THE TERMINUS OF ALL BRANCH AND MAIN SVE LINES (SEE FIGURE 8G FOR DETAILS)
- REFER TO FIGURE 10 FOR CROSS SECTIONS A–A' AND B–B'
- REFER TO FIGURE 11 FOR DETAIL H

LICENSED PROFESSIONAL ENGINEER
BRANT A. SMITH
062-064184
STATE OF ILLINOIS

TO THE BEST OF MY KNOWLEDGE, INFORMATION, AND BELIEF, CONSTRUCTION WAS COMPLETED IN ACCORDANCE WITH THIS DOCUMENT.

XDD
STRATEGIC. ENVIRONMENTAL. SOLUTIONS.

SCALE: AS SHOWN	TITLE: SVE PIPING LAYOUT W.G. KRUMMRICH FACILITY SAUGET, IL
DATE: APRIL 2012	
PROJECT NO.: 11002	
CLIENT: SOLUTIA INC.	
DRAWN BY: JDA	DRAWING NO.: FIGURE 4A
CHECKED BY: DK	REV: 3
PROJ. MGMT. APPROVAL: DK	

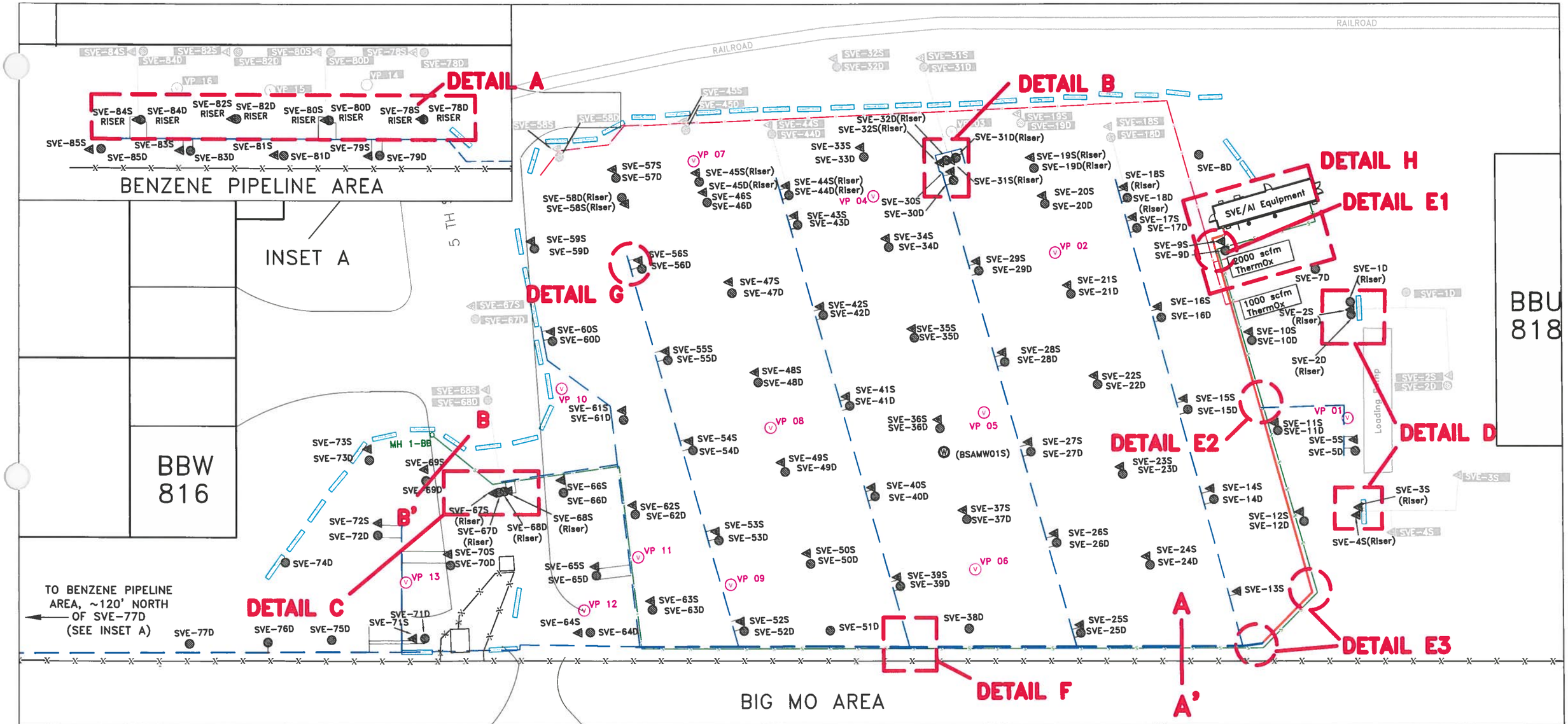

LEGEND

- = ABOVE GRADE DEEP WELL
- = ABOVE GRADE SHALLOW WELL
- = BELOW GRADE DEEP WELL
- = BELOW GRADE SHALLOW WELL
- = MONITORING WELL
- = VAPOR PROBE
- = BELOW GRADE VAPOR PROBE
- = SEWER MANHOLE
- = FENCELINE
- = GAS LINE
- = BELOW GRADE 2" CARBON STEEL PIPING (APPROXIMATE LOCATION)
- = 2" ABOVE GRADE SCHEDULE 80 CPVC PIPING
- = 6" ABOVE GRADE INSULATED AI SCHEDULE 80 CPVC PIPING
- = 12" ABOVE GRADE INSULATED AI SCHEDULE 80 CPVC PIPING
- = JERSEY BARRIER
- = SEWER LINE
- SVE-67D = BELOW GRADE WELL/VAPOR PROBE ID

NOTES:

- ALL ABOVE GRADE BRANCH AND MANIFOLD PIPING ARE INSULATED
- ALL MANIFOLDING DETAILS ARE PRESENTED ON FIGURES 8A THROUGH 8D
- CLEANOUTS ARE INSTALLED AT THE TERMINUS OF ALL BRANCH AND MAIN SVE LINES (SEE FIGURE 8G FOR DETAILS)
- REFER TO FIGURE 10 FOR CROSS SECTIONS A–A' AND B–B'
- REFER TO FIGURE 11 FOR DETAIL H

LICENSED PROFESSIONAL ENGINEER
BRANT A. SMITH
062-064184
STATE OF ILLINOIS

TO THE BEST OF MY KNOWLEDGE, INFORMATION, AND BELIEF, CONSTRUCTION WAS COMPLETED IN ACCORDANCE WITH THIS DOCUMENT.

XDD
STRATEGIC. ENVIRONMENTAL. SOLUTIONS.

SCALE: AS SHOWN	TITLE: AI PIPING LAYOUT W.G. KRUMMRICH FACILITY SAUGET, IL
DATE: APRIL 2012	
PROJECT NO.: 11002	
CLIENT: SOLUTIA INC.	
DRAWN BY: JDA	DRAWING NO.: FIGURE 4B
CHECKED BY: DK	REV: 3
PROJ. MGMT. APPROVAL: DK	

TYPICAL SVE/AI WELL

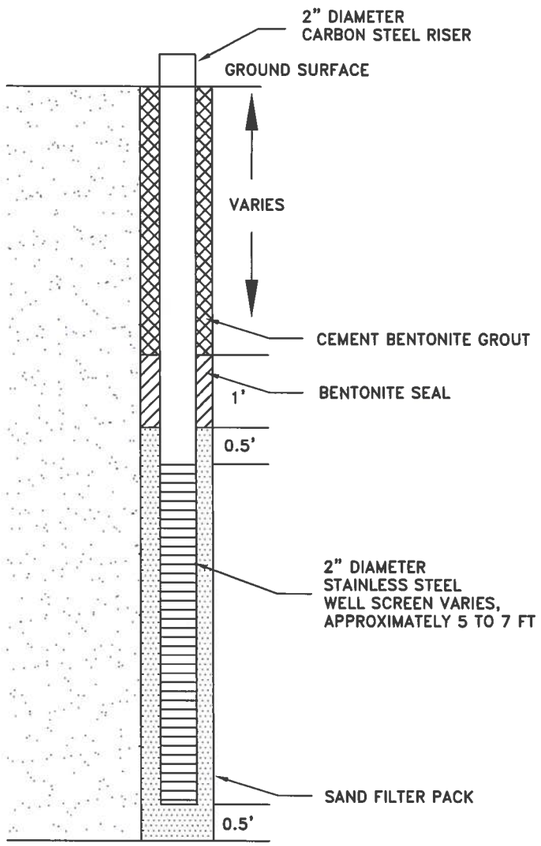

TYPICAL BELOW GRADE SVE/AI WELL COMPLETION DETAIL

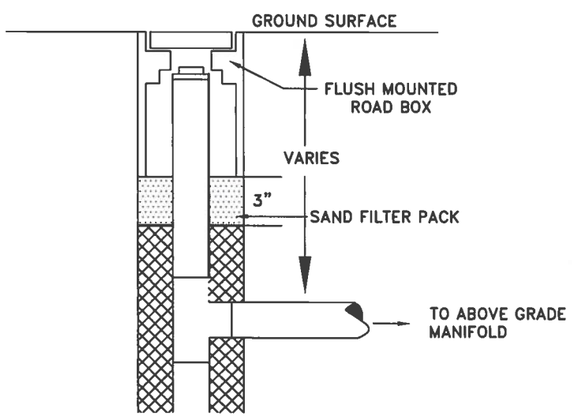

TYPICAL NESTED VAPOR PROBE

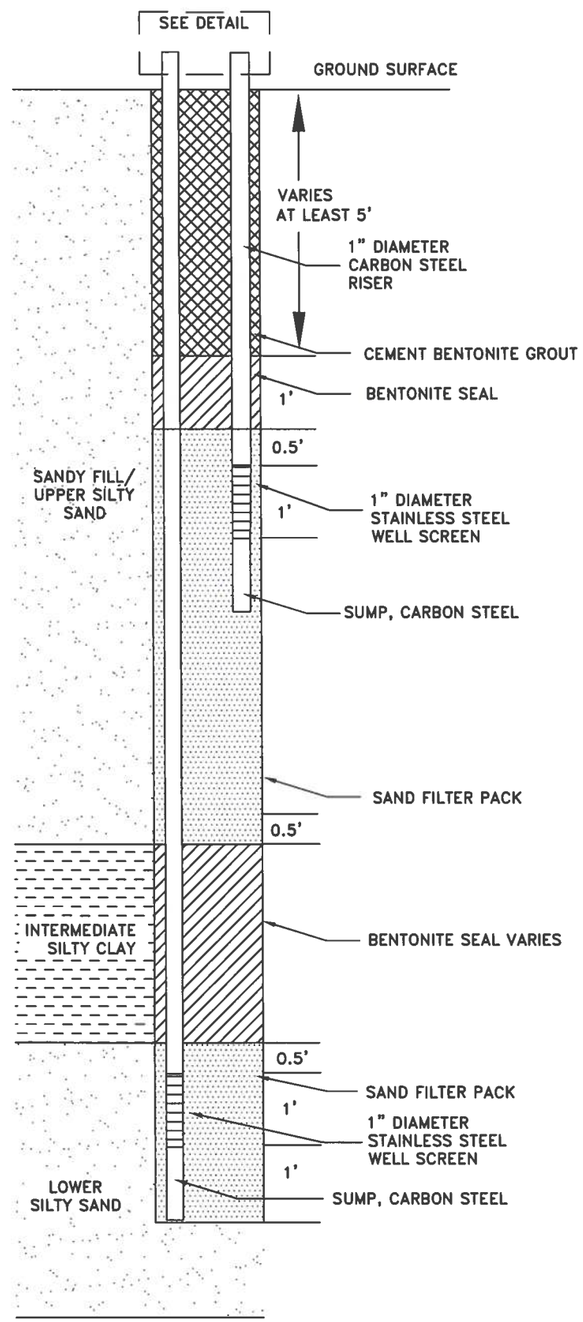

TYPICAL SINGLE VAPOR PROBE

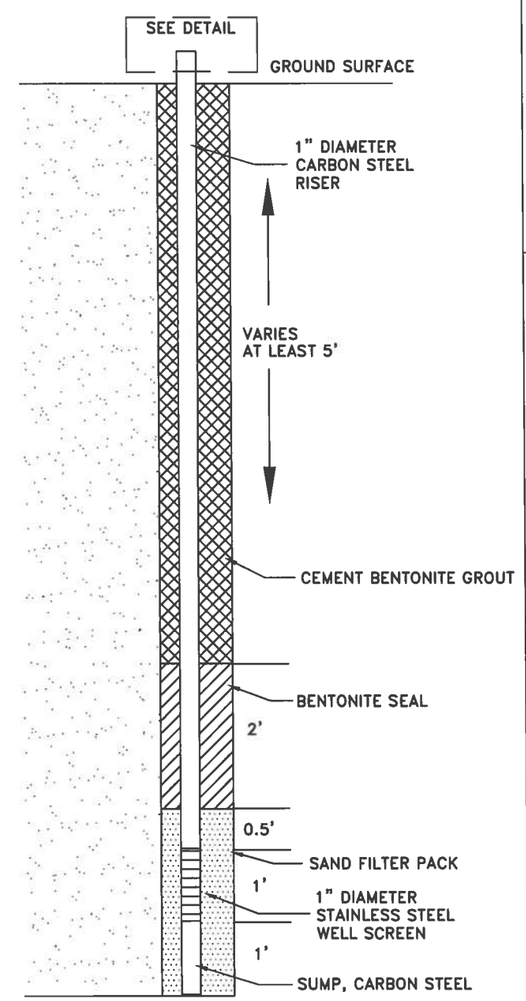

TYPICAL ABOVE GRADE VAPOR PROBE COMPLETION DETAIL

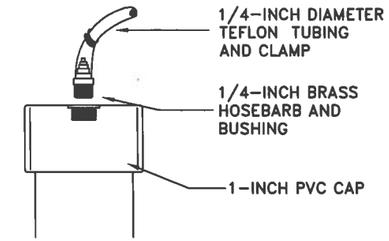

TYPICAL BELOW GRADE VAPOR PROBE DETAIL

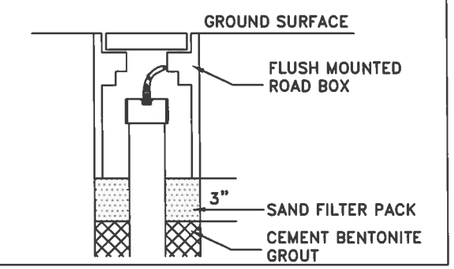

NOTE:

SVE = SOIL VAPOR EXTRACTION

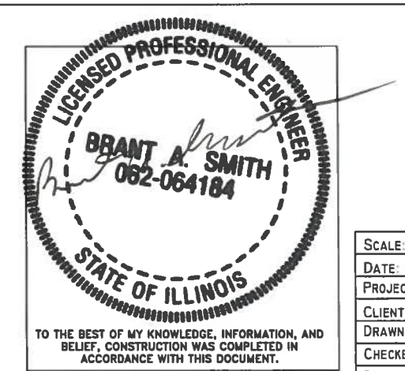

XDD
STRATEGIC. ENVIRONMENTAL. SOLUTIONS.

SCALE: NOT TO SCALE	TITLE: WELL AND VAPOR PROBE DESIGN CROSS-SECTION W.G. KRUMMRICH FACILITY SAUGET, IL
DATE: FEBRUARY 2012	
PROJECT NO.: 11002	
CLIENT: SOLUTIA INC.	
DRAWN BY: MF	DRAWING NO.: FIGURE 5
CHECKED BY: ELS	REV: 1
PROJ. MGMT. APPROVAL: SC	

SIDE VIEW

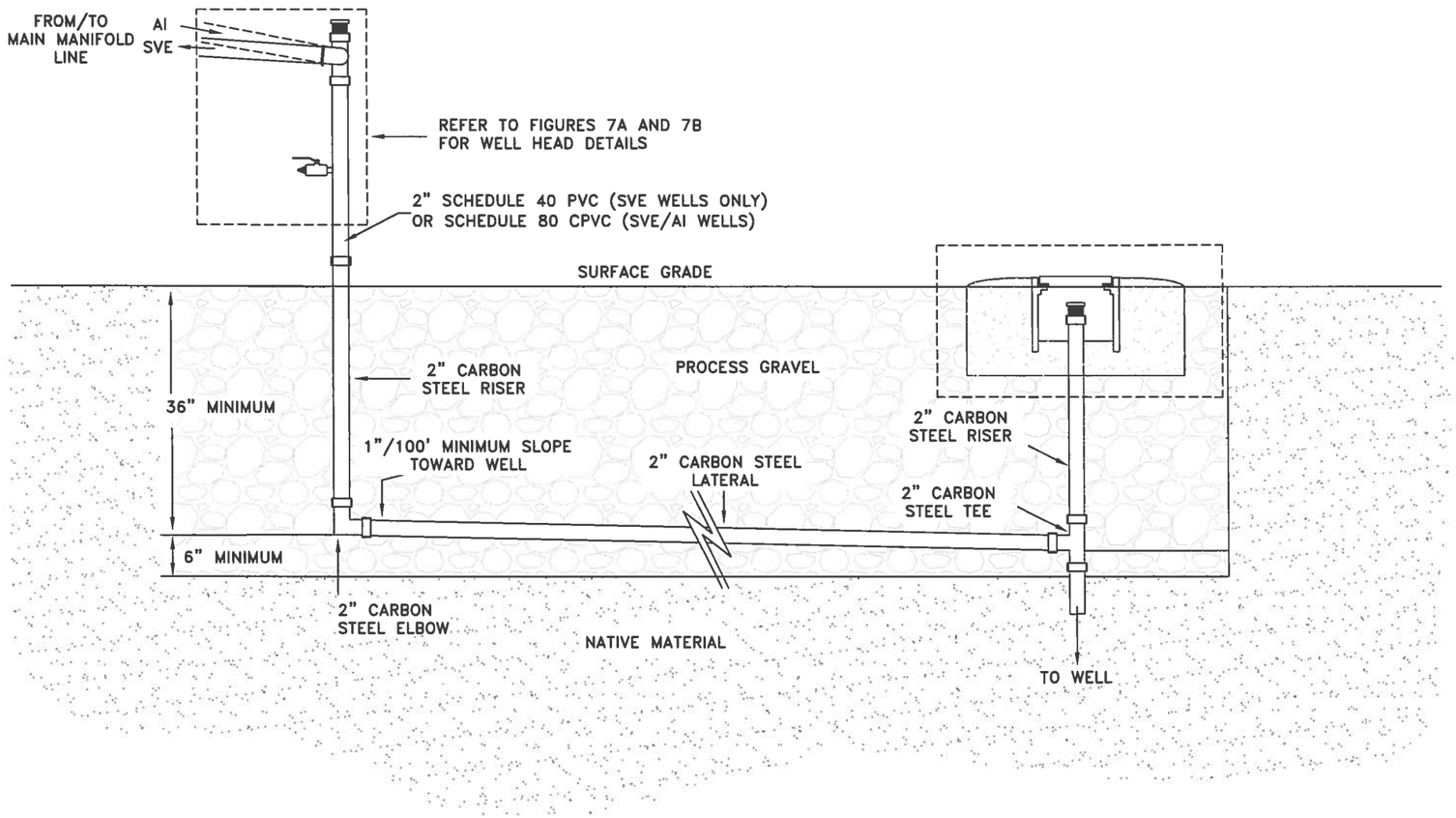

TRENCH CROSS SECTION VIEW

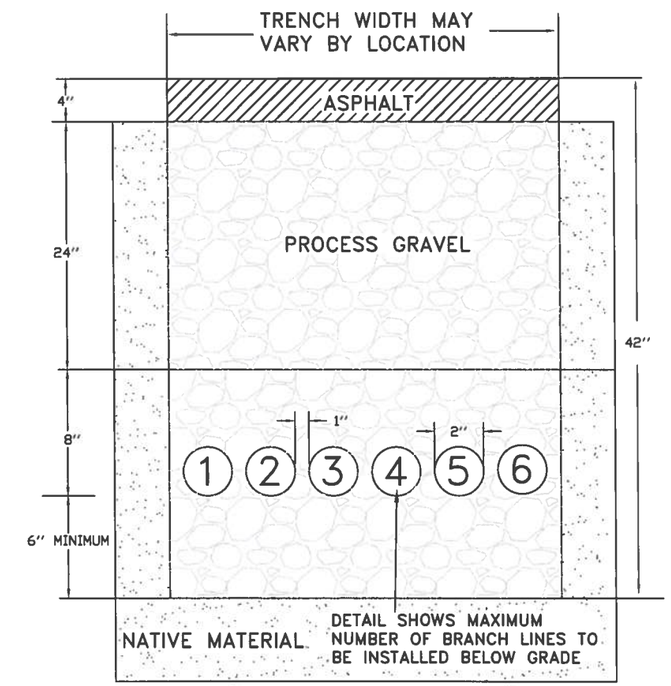

NOTES:

- AI = AIR INJECTION
- CPVC = CHLORINATED POLYVINYL CHLORIDE
- PVC = POLYVINYL CHLORIDE
- SVE = SOIL VAPOR EXTRACTION

LICENSED PROFESSIONAL ENGINEER
BRANT A. SMITH
062-064184
STATE OF ILLINOIS

TO THE BEST OF MY KNOWLEDGE, INFORMATION, AND BELIEF, CONSTRUCTION WAS COMPLETED IN ACCORDANCE WITH THIS DOCUMENT.

XDD
STRATEGIC. ENVIRONMENTAL. SOLUTIONS.

SCALE: NOT TO SCALE	TITLE: BELOW GRADE TRENCHING DETAIL W.G. KRUMMRICH FACILITY SAUGET, IL
DATE: FEBRUARY 2012	
PROJECT NO.: 11002	
CLIENT: SOLUTIA INC.	
DRAWN BY: LBC/JWH	DRAWING NO.: FIGURE 6
CHECKED BY: DK	REV: 3
PROJ. MGMT. APPROVAL: DK	

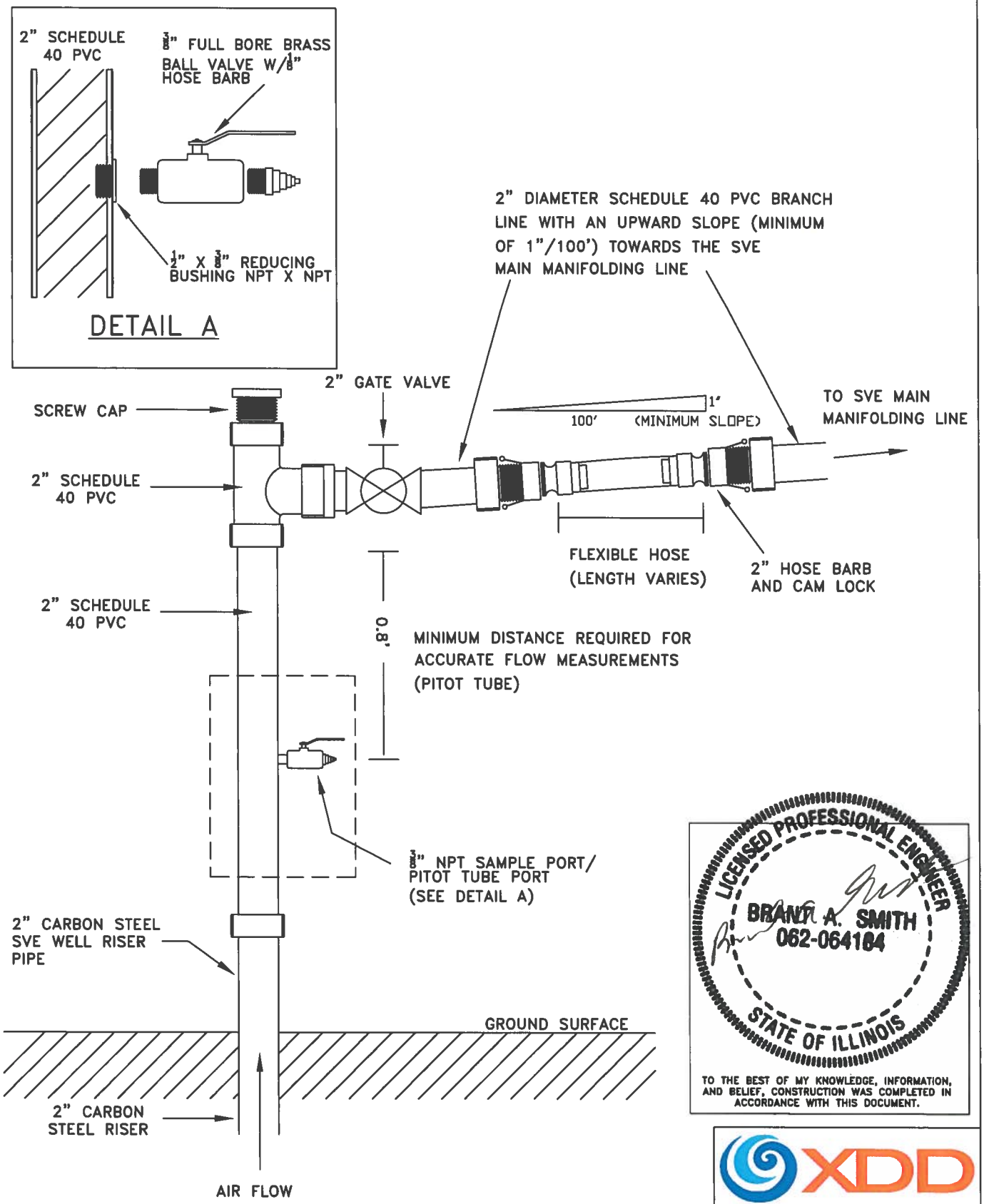

LICENSED PROFESSIONAL ENGINEER
BRANDI A. SMITH
062-064184
STATE OF ILLINOIS

TO THE BEST OF MY KNOWLEDGE, INFORMATION, AND BELIEF, CONSTRUCTION WAS COMPLETED IN ACCORDANCE WITH THIS DOCUMENT.

XDD
STRATEGIC. ENVIRONMENTAL. SOLUTIONS.

NOTES:

- PVC = POLYVINYL CHLORIDE
- SVE = SOIL VAPOR EXTRACTION

SCALE: NOT TO SCALE	TITLE: SVE WELLHEAD DESIGN DETAIL W.G. KRUMMRICH FACILITY SAUGET, IL
DATE: FEBRUARY 2012	
PROJECT NO.: 11002	
CLIENT: SOLUTIA INC.	
DRAWN BY: LBC	DRAWING NO.: FIGURE 7A
CHECKED BY: SCC	REV.: 2
PROJ. MGMT. APPROVAL: SCC	

SIDE VIEW

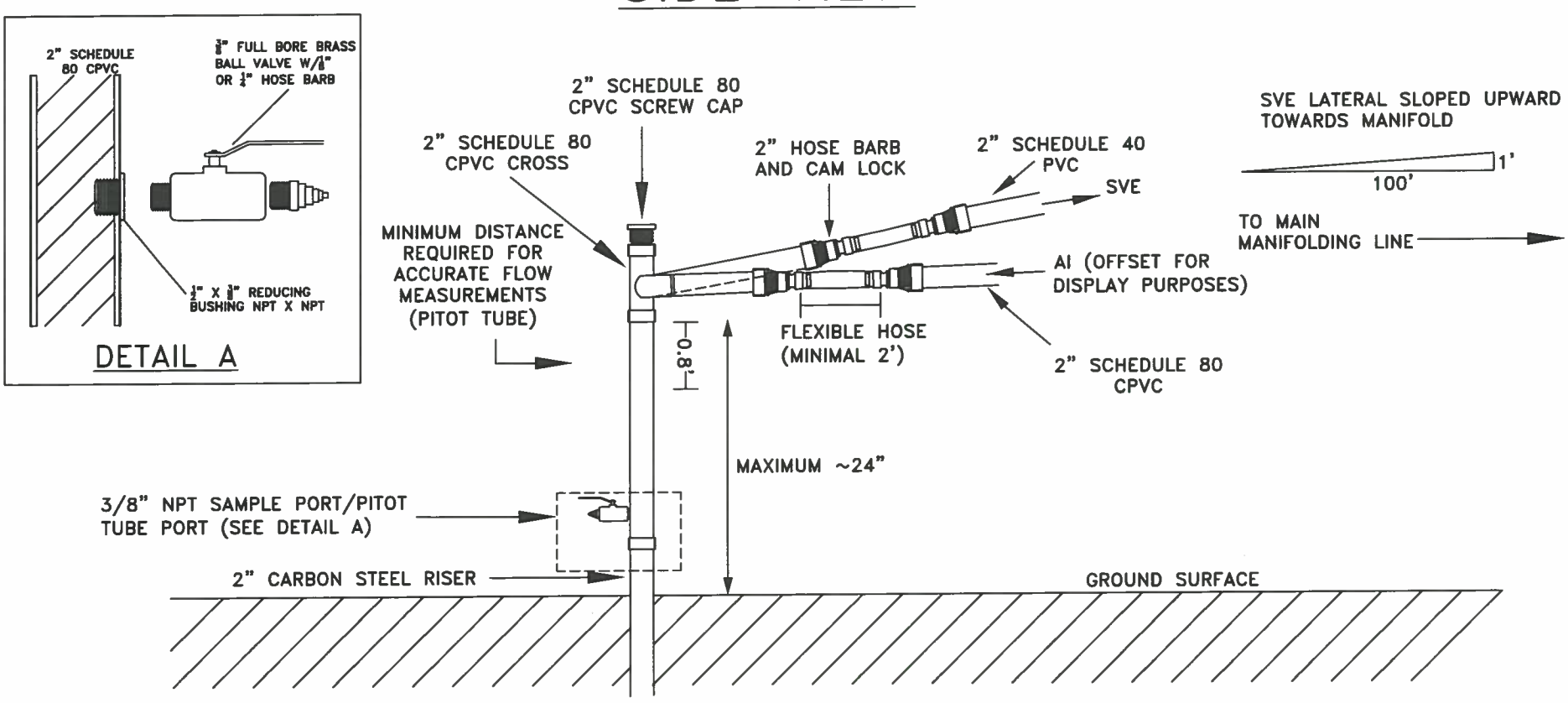

TOP VIEW

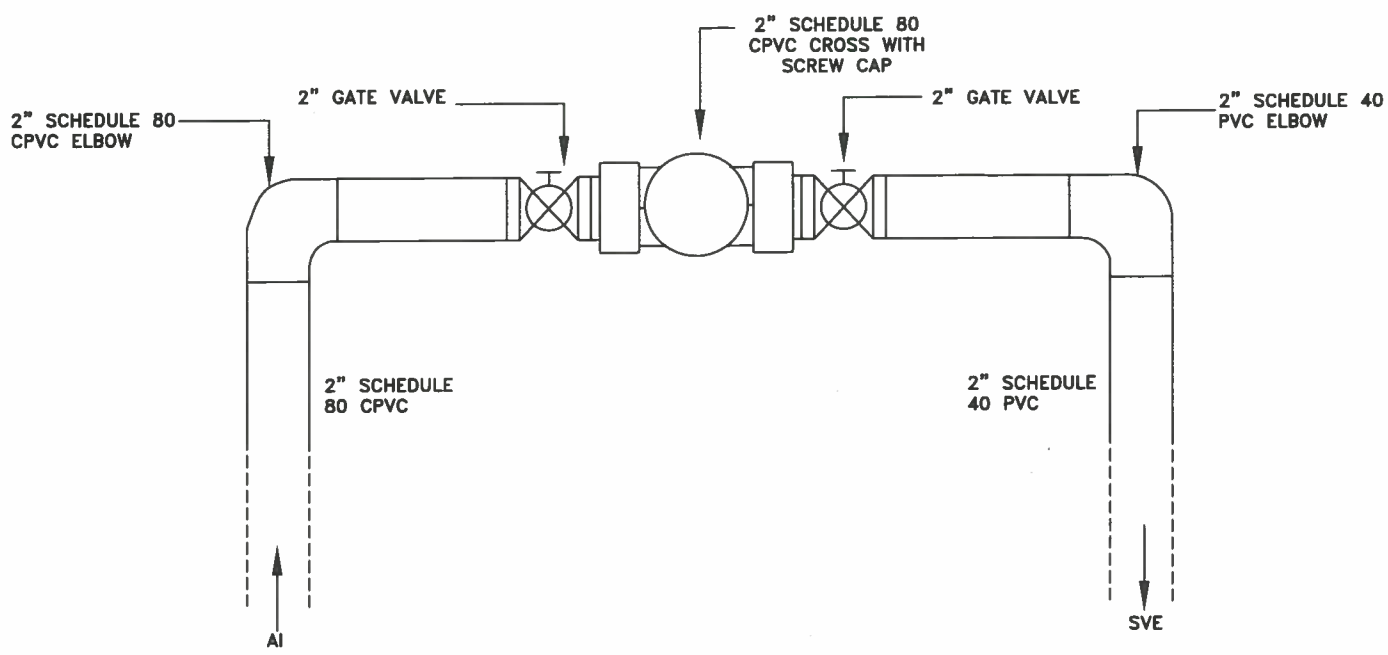

FRONT VIEW

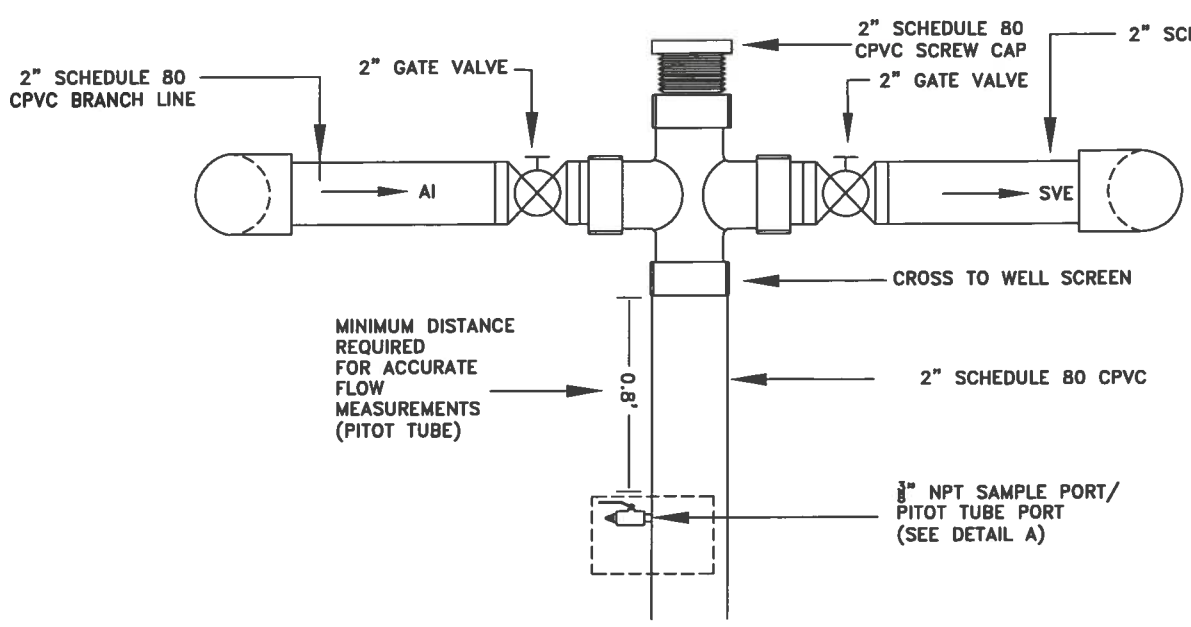

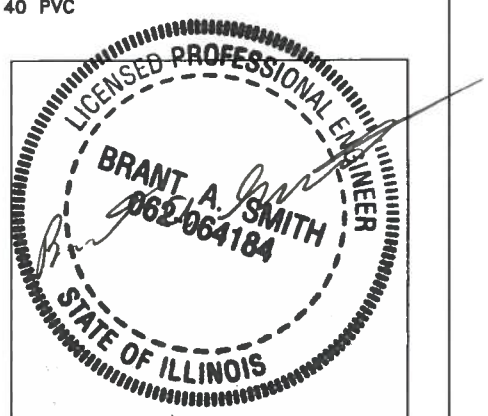

TO THE BEST OF MY KNOWLEDGE, INFORMATION, AND BELIEF, CONSTRUCTION WAS COMPLETED IN ACCORDANCE WITH THIS DOCUMENT.

XDD
STRATEGIC. ENVIRONMENTAL. SOLUTIONS.

NOTES:

- AI = AIR INJECTION
- CPVC = CHLORINATED POLYVINYL CHLORIDE
- PVC = POLYVINYL CHLORIDE
- SVE = SOIL VAPOR EXTRACTION
- FLEX HOSE LOCATED AT THE BRANCH LINES.

SCALE: NOT TO SCALE	TITLE: COMBINED SVE/AI WELLHEAD DESIGN DETAIL W.G. KRUMMRICH FACILITY SAUGET, IL
DATE: JUNE 2012	
PROJECT NO.: 12010	
CLIENT: SOLUTIA INC.	
DRAWN BY: LBC	DRAWING NO.: FIGURE 7B
CHECKED BY: ELS	REV: 2
PROJ. MGMT. APPROVAL: SCC	

TOP VIEW

SVE/AI WELL LOCATIONS (SVE-84 S/D and SVE-80 S/D)

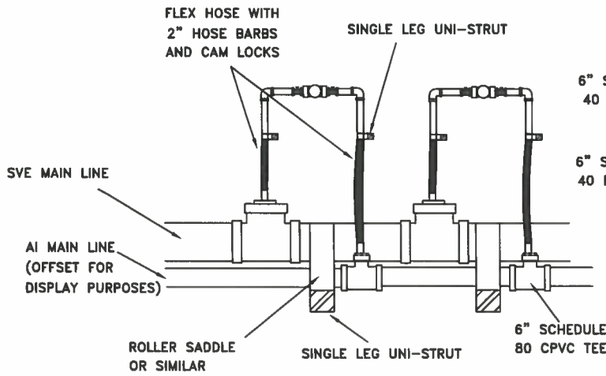

SVE WELL LOCATIONS (SVE-82 S/D and SVE-78 S/D)

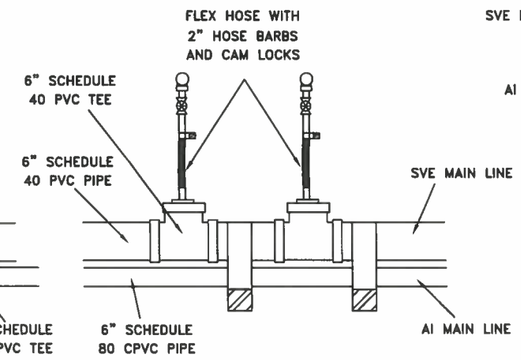

FRONT VIEW

SVE/AI WELL LOCATIONS (SVE-84 S/D and SVE-80 S/D)

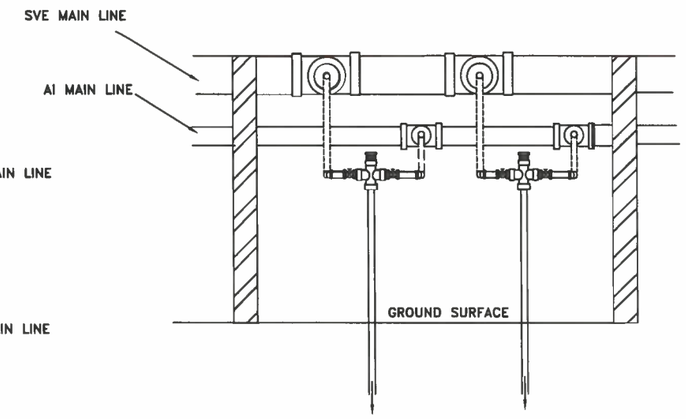

SVE WELL LOCATIONS (SVE-82 S/D and SVE-78 S/D)

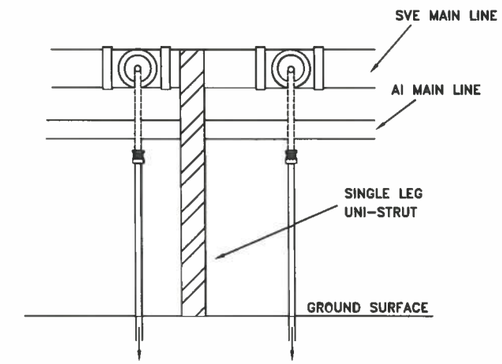

SIDE VIEW

SVE/AI WELL LOCATIONS (SVE-84 S/D and SVE-80 S/D)

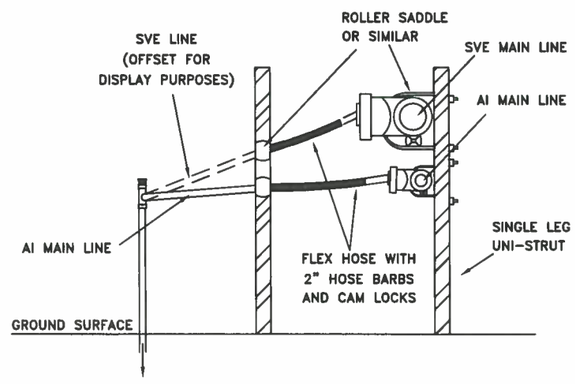

SVE WELL LOCATIONS (SVE-82 S/D and SVE-78 S/D)

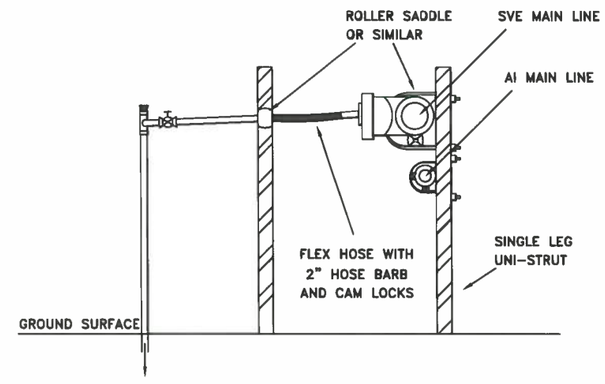

NOTES:

- AI = AIR INJECTION
- CPVC = CHLORINATED POLYVINYL CHLORIDE
- PVC = POLYVINYL CHLORIDE
- SVE = SOIL VAPOR EXTRACTION
- REFER TO FIGURES 4A AND 4B FOR MANIFOLD DETAIL LOCATION.
- REFER TO FIGURES 7A AND 7B FOR SVE AND COMBINATION SVE/AI WELLHEAD DETAILS, RESPECTIVELY.
- SPACING OF PIPE FITTINGS AND UNI-STRUT SUPPORTS ARE FOR DISPLAY PURPOSES ONLY. ACTUAL SPACING VARIES BY LOCATION.
- ALL AI MANIFOLD PIPING IS INSULATED.
- ALL SVE MANIFOLD PIPING IS INSULATED AND HEAT TRACED FOR FREEZE PROTECTION.
- REFER TO FIGURE 10 FOR PIPE INSULATION AND HEAT TRACING DETAILS.

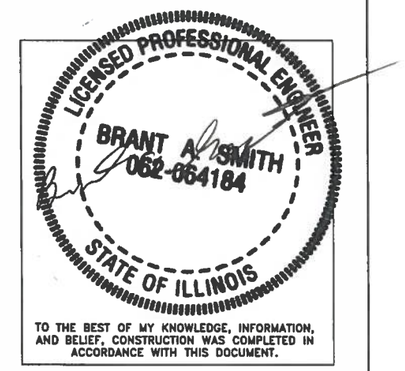

XDD
STRATEGIC. ENVIRONMENTAL. SOLUTIONS.

SCALE: NOT TO SCALE	TITLE: BELOW GRADE WELLHEAD MANIFOLD DETAIL A W.G. KRUMMRICH FACILITY SAUGET, IL
DATE: FEBRUARY 2012	
PROJECT NO.: 11002	
CLIENT: SOLUTIA, INC.	
DRAWN BY: JWH	DRAWING NO.: FIGURE 8A
CHECKED BY: SC	REV: 2
PROJ. MGMT. APPROVAL: SC	

TOP VIEW

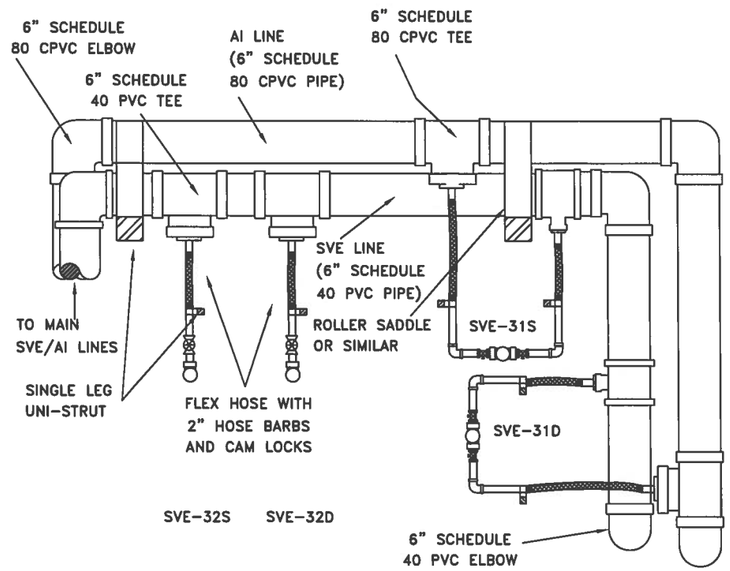

FRONT VIEW

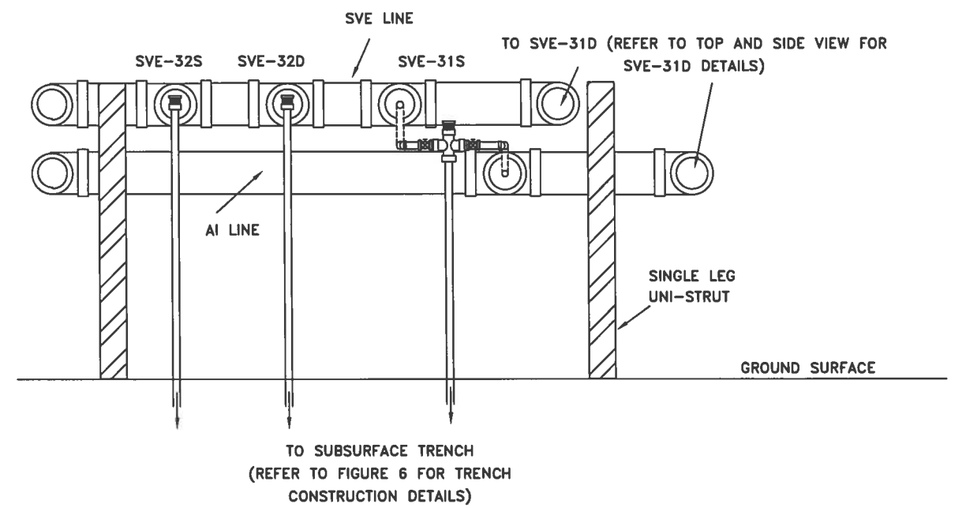

SIDE VIEW

SVE/AI WELL LOCATIONS (SVE-31 S/D)

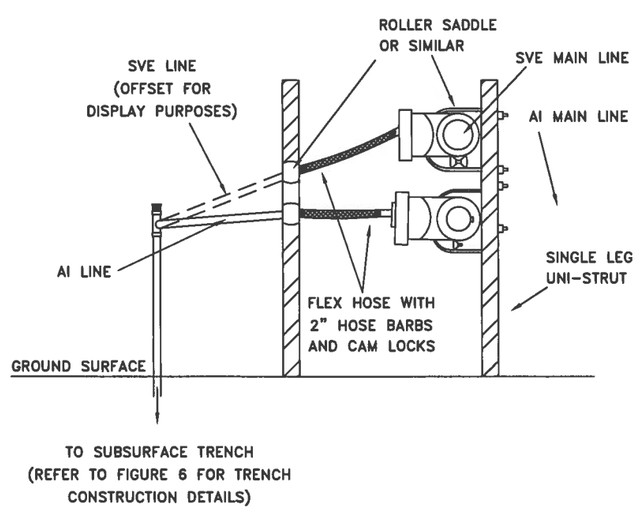

SVE WELL LOCATIONS (SVE-32 S/D)

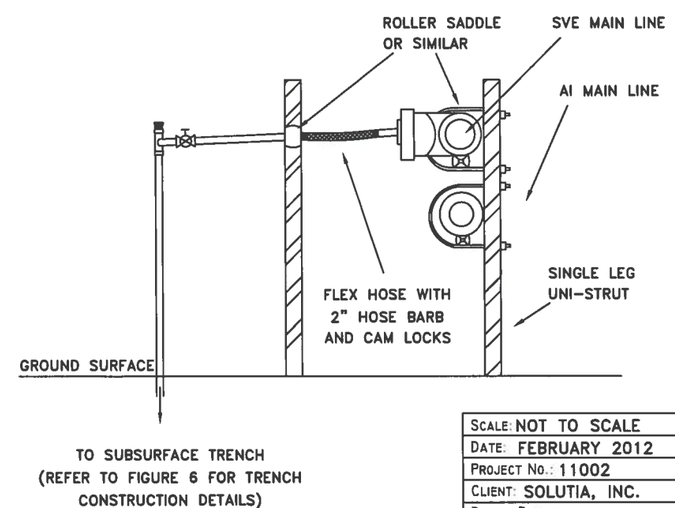

NOTES:

- AI = AIR INJECTION
- CPVC = CHLORINATED POLYVINYL CHLORIDE
- PVC = POLYVINYL CHLORIDE
- SVE = SOIL VAPOR EXTRACTION
- REFER TO FIGURES 4A AND 4B FOR MANIFOLD DETAIL LOCATION.
- REFER TO FIGURES 7A AND 7B FOR SVE AND COMBINATION SVE/AI WELLHEAD DETAILS, RESPECTIVELY.
- SPACING OF PIPE FITTINGS AND UNI-STRUT SUPPORTS ARE FOR DISPLAY PURPOSES ONLY. ACTUAL SPACING VARIES BY LOCATION.
- ALL AI MANIFOLD PIPING IS INSULATED.
- ALL SVE MANIFOLD PIPING IS INSULATED AND HEAT TRACED FOR FREEZE PROTECTION.
- REFER TO FIGURE 10 FOR PIPE INSULATION AND HEAT TRACING DETAILS.

TO THE BEST OF MY KNOWLEDGE, INFORMATION, AND BELIEF, CONSTRUCTION WAS COMPLETED IN ACCORDANCE WITH THIS DOCUMENT.

XDD
STRATEGIC. ENVIRONMENTAL. SOLUTIONS.

SCALE: NOT TO SCALE	TITLE: BELOW GRADE WELLHEAD MANIFOLD DETAIL B W.G. KRUMMRICH FACILITY SAUGET, IL
DATE: FEBRUARY 2012	
PROJECT NO.: 11002	
CLIENT: SOLUTIA, INC.	
DRAWN BY: JDA	DRAWING NO.: FIGURE 8B
CHECKED BY: DK	REV: 3
PROJ. MGMT. APPROVAL: DK	

TOP VIEW

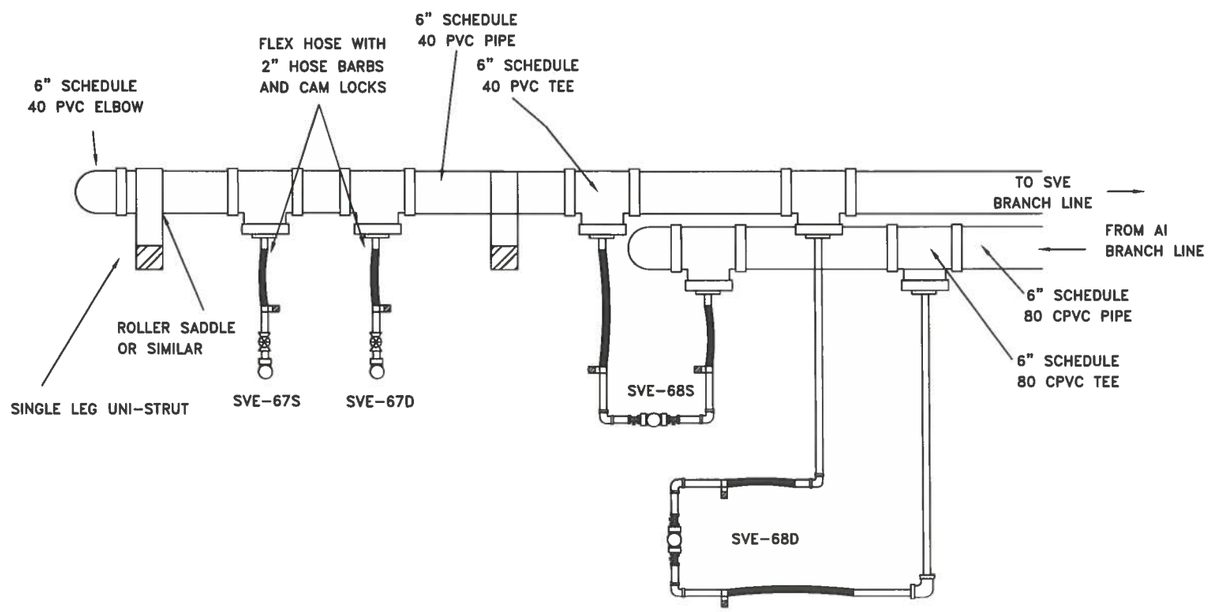

SIDE VIEW

SVE WELL LOCATION
(SVE-67 S/D)

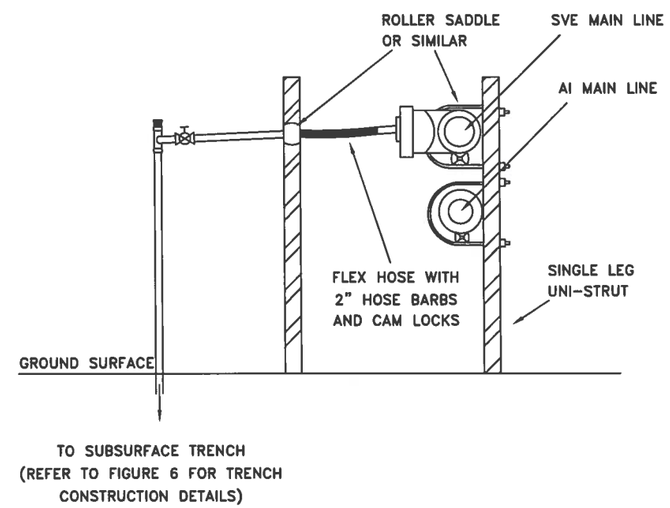

FRONT VIEW

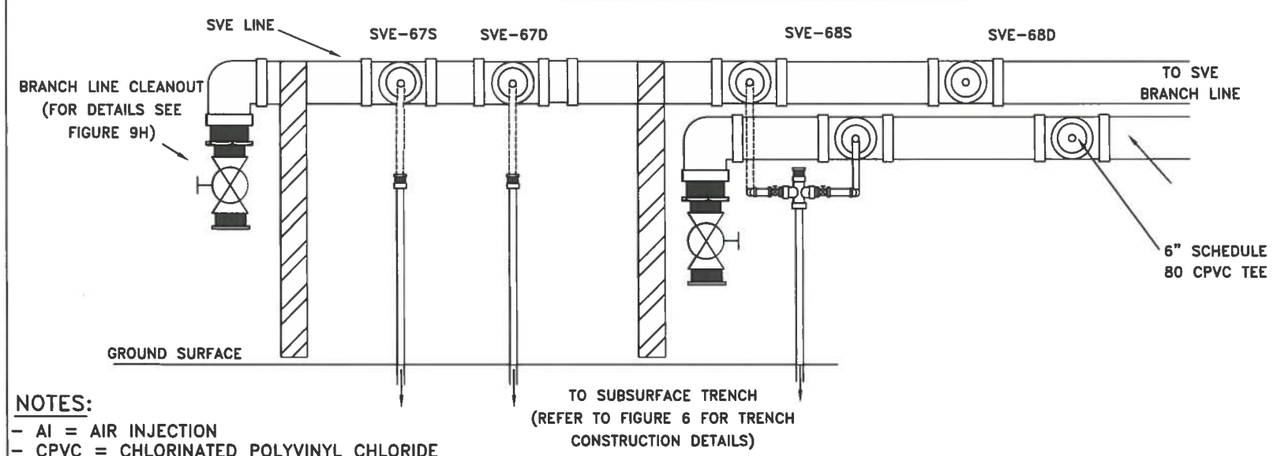

SVE/AI WELL LOCATIONS
(SVE-68 S/D)

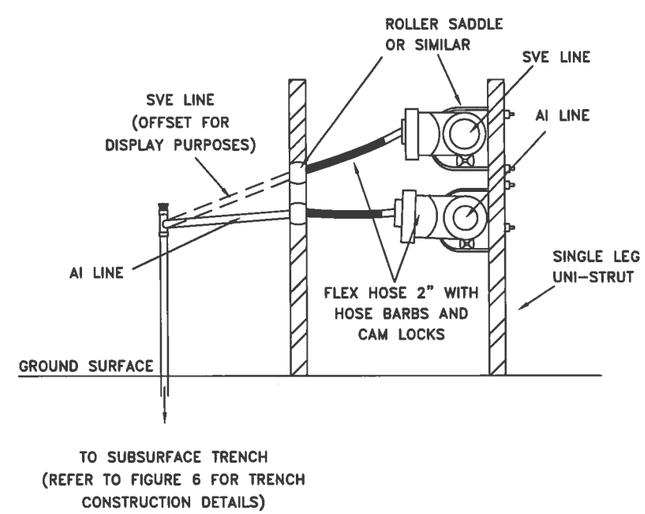

LICENSED PROFESSIONAL ENGINEER
BRANT A. SMITH
062-064184
STATE OF ILLINOIS

TO THE BEST OF MY KNOWLEDGE, INFORMATION, AND BELIEF, CONSTRUCTION WAS COMPLETED IN ACCORDANCE WITH THIS DOCUMENT.

NOTES:

- AI = AIR INJECTION
- CPVC = CHLORINATED POLYVINYL CHLORIDE
- PVC = POLYVINYL CHLORIDE
- SVE = SOIL VAPOR EXTRACTION
- REFER TO FIGURES 4A AND 4B FOR MANIFOLD DETAIL LOCATION.
- REFER TO FIGURES 7A AND 7B FOR SVE AND COMBINATION SVE/AI WELLHEAD DETAILS, RESPECTIVELY.
- SPACING OF PIPE FITTINGS AND UNI-STRUT SUPPORTS ARE FOR DISPLAY PURPOSES ONLY. ACTUAL SPACING VARIES BY LOCATION.
- ALL AI MANIFOLD PIPING IS INSULATED.
- ALL SVE MANIFOLD PIPING IS INSULATED AND HEAT TRACED FOR FREEZE PROTECTION.
- REFER TO FIGURE 10 FOR PIPE INSULATION AND HEAT TRACING DETAILS.

XDD
STRATEGIC. ENVIRONMENTAL. SOLUTIONS.

SCALE: NOT TO SCALE	TITLE: BELOW GRADE WELLHEAD MANIFOLD DETAIL C W.G. KRUMMRICH FACILITY SAUGET, IL
DATE: FEBRUARY 2012	
PROJECT NO.: 11002	
CLIENT: SOLUTIA, INC.	
DRAWN BY: JDA	DRAWING NO.: FIGURE 8C
CHECKED BY: DK	REV: 4
PROJ. MGMT. APPROVAL: DK	

TOP VIEW

SVE WELL LOCATIONS
(SVE-1D, SVE-2S/D, SVE-3S, AND SVE-4S)

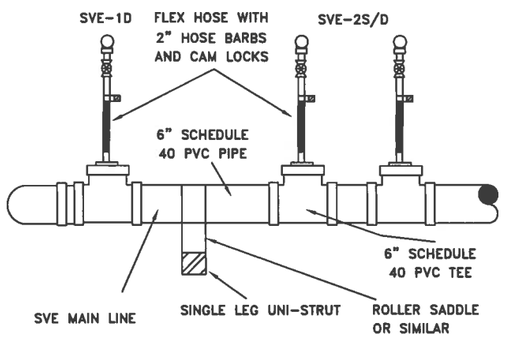

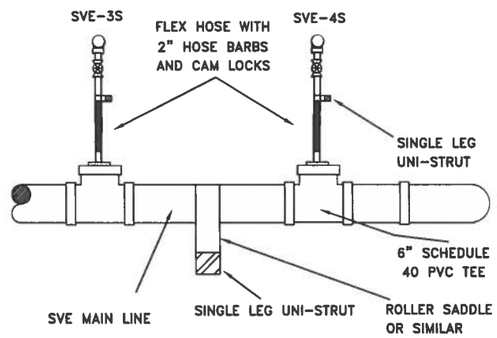

FRONT VIEW

SVE WELL LOCATIONS
(SVE-1D, SVE-2S/D, SVE-3S, AND SVE-4S)

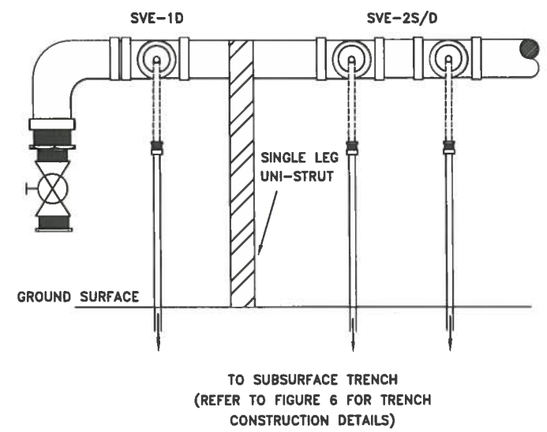

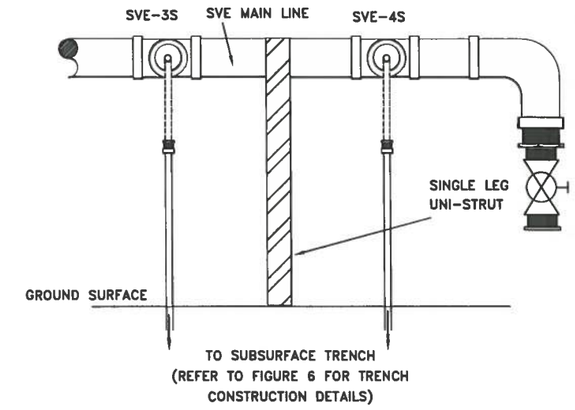

SIDE VIEW

SVE WELL LOCATIONS
(SVE-1D, SVE-2S/D, SVE-3S, AND SVE-4S)

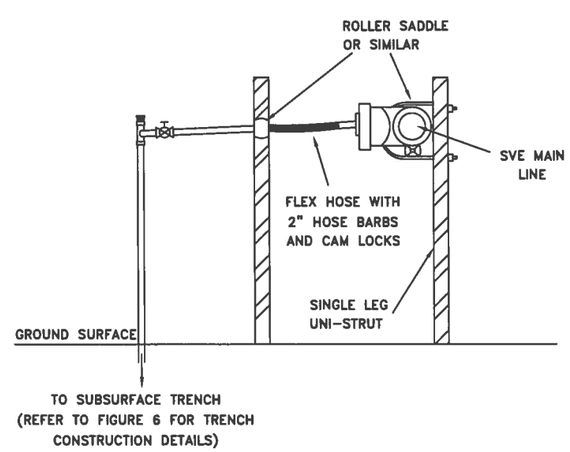

NOTES:

- AI = AIR INJECTION
- CPVC = CHLORINATED POLYVINYL CHLORIDE
- PVC = POLYVINYL CHLORIDE
- SVE = SOIL VAPOR EXTRACTION
- REFER TO FIGURES 4A AND 4B FOR MANIFOLD DETAIL LOCATION.
- REFER TO FIGURES 7A AND 7B FOR SVE AND COMBINATION SVE/AI WELLHEAD DETAILS, RESPECTIVELY.
- SPACING OF PIPE FITTINGS AND UNI-STRUT SUPPORTS ARE FOR DISPLAY PURPOSES ONLY. ACTUAL SPACING VARIES BY LOCATION.
- ALL AI MANIFOLD PIPING IS INSULATED.
- ALL SVE MANIFOLD PIPING IS INSULATED AND HEAT TRACED FOR FREEZE PROTECTION.
- REFER TO FIGURE 10 FOR PIPE INSULATION AND HEAT TRACING DETAILS.

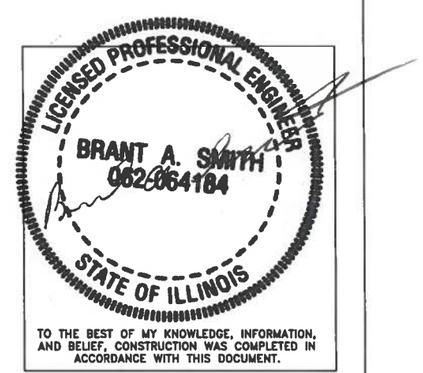

XDD
STRATEGIC. ENVIRONMENTAL. SOLUTIONS.

SCALE: NOT TO SCALE	TITLE: BELOW GRADE WELLHEAD MANIFOLD DETAIL D W.G. KRUMMRICH FACILITY SAUGET, IL
DATE: FEBRUARY 2012	
PROJECT NO.: 11002	
CLIENT: SOLUTIA, INC.	
DRAWN BY: JWH	DRAWING NO.: FIGURE 8D
CHECKED BY: SC	REV: 2
PROJ. MGMT. APPROVAL: SC	

DETAIL E1

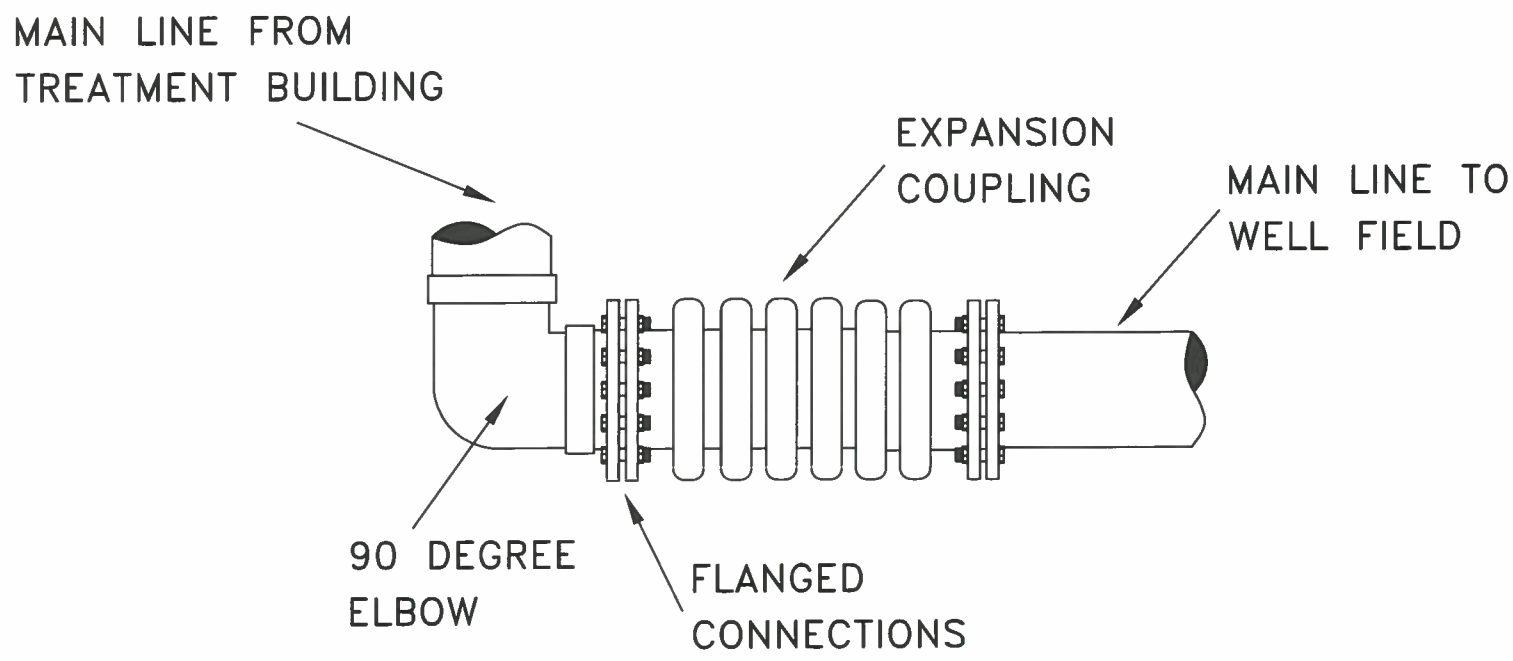

DETAIL E2

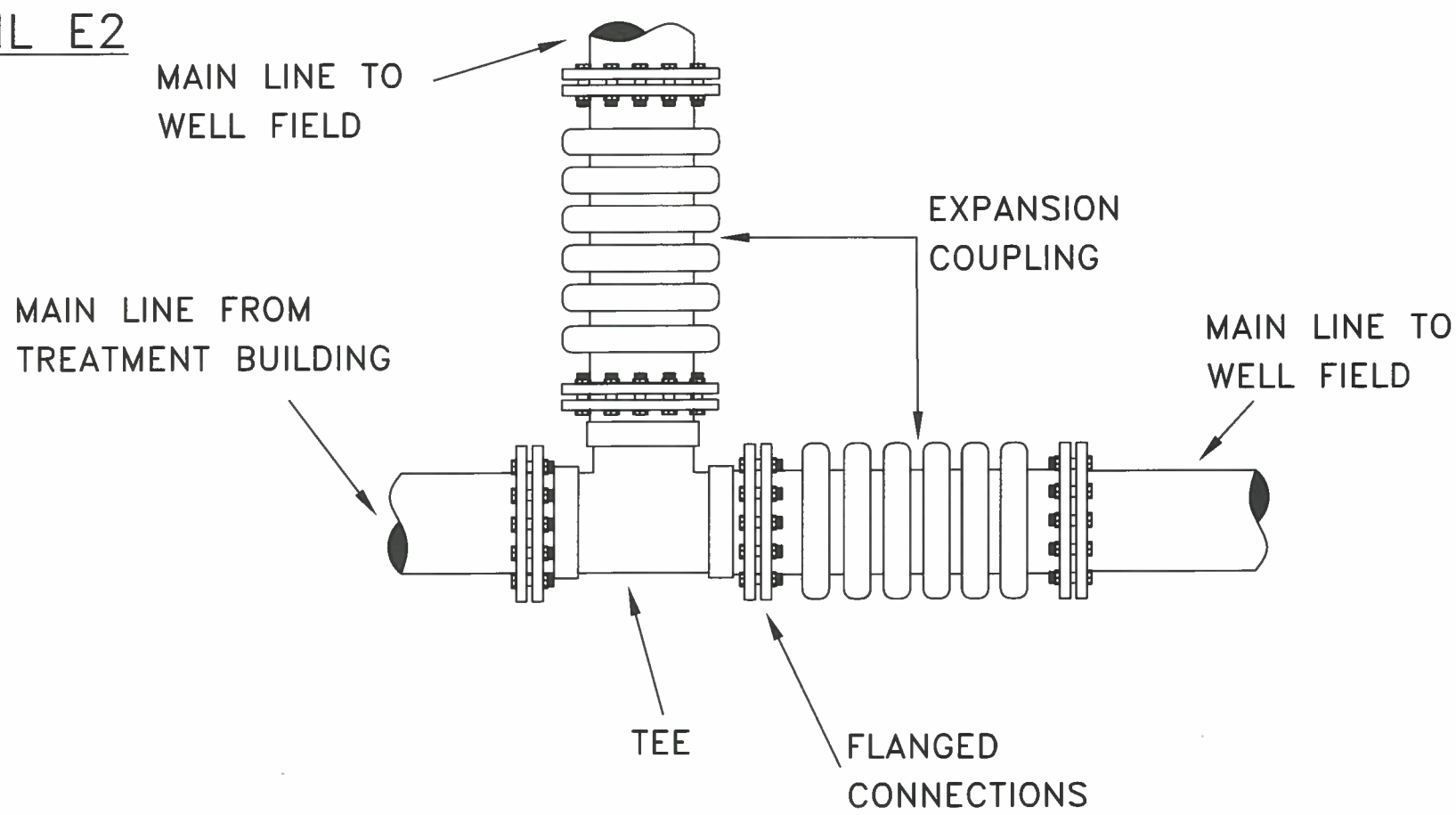

DETAIL E3

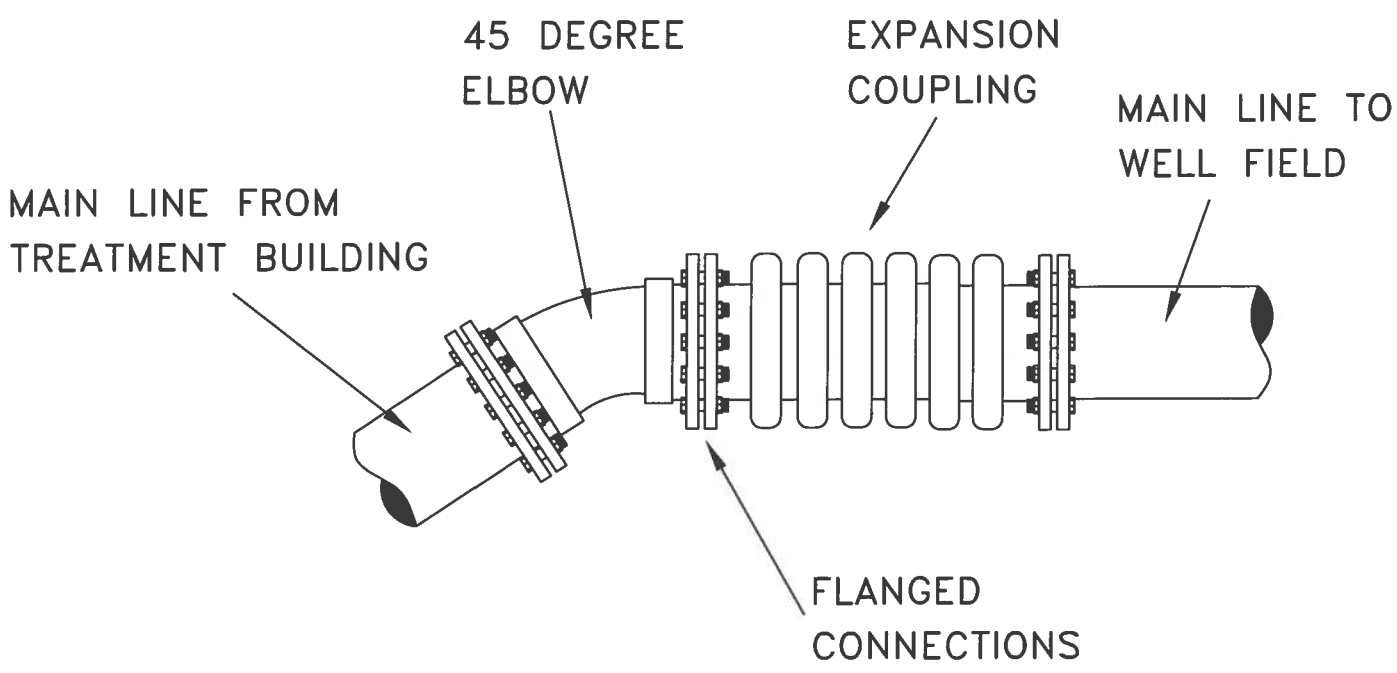

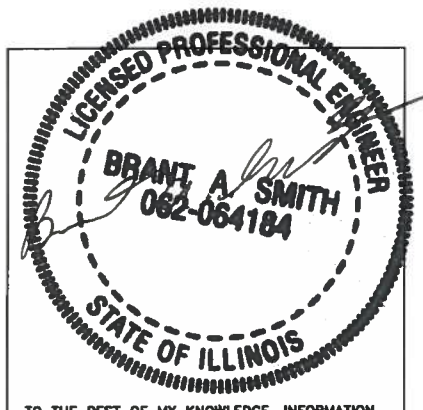

TO THE BEST OF MY KNOWLEDGE, INFORMATION, AND BELIEF, CONSTRUCTION WAS COMPLETED IN ACCORDANCE WITH THIS DOCUMENT.

XDD
STRATEGIC. ENVIRONMENTAL. SOLUTIONS.

NOTE:
- REFER TO FIGURES 4A AND 4B FOR SOIL VAPOR EXTRACTION AND AIR INJECTION PIPING SPECIFICATIONS, RESPECTIVELY.

SCALE: NOT TO SCALE	TITLE: EXPANSION COUPLING DETAIL E W.G. KRUMMRICH FACILITY SAUGET, IL
DATE: FEBRUARY 2012	
PROJECT NO.: 11002	
CLIENT: SOLUTIA INC.	
DRAWN BY: MAW	DRAWING NO.: FIGURE 8E
CHECKED BY: DK	REV: 1
PROJ. MGMT. APPROVAL: DK	

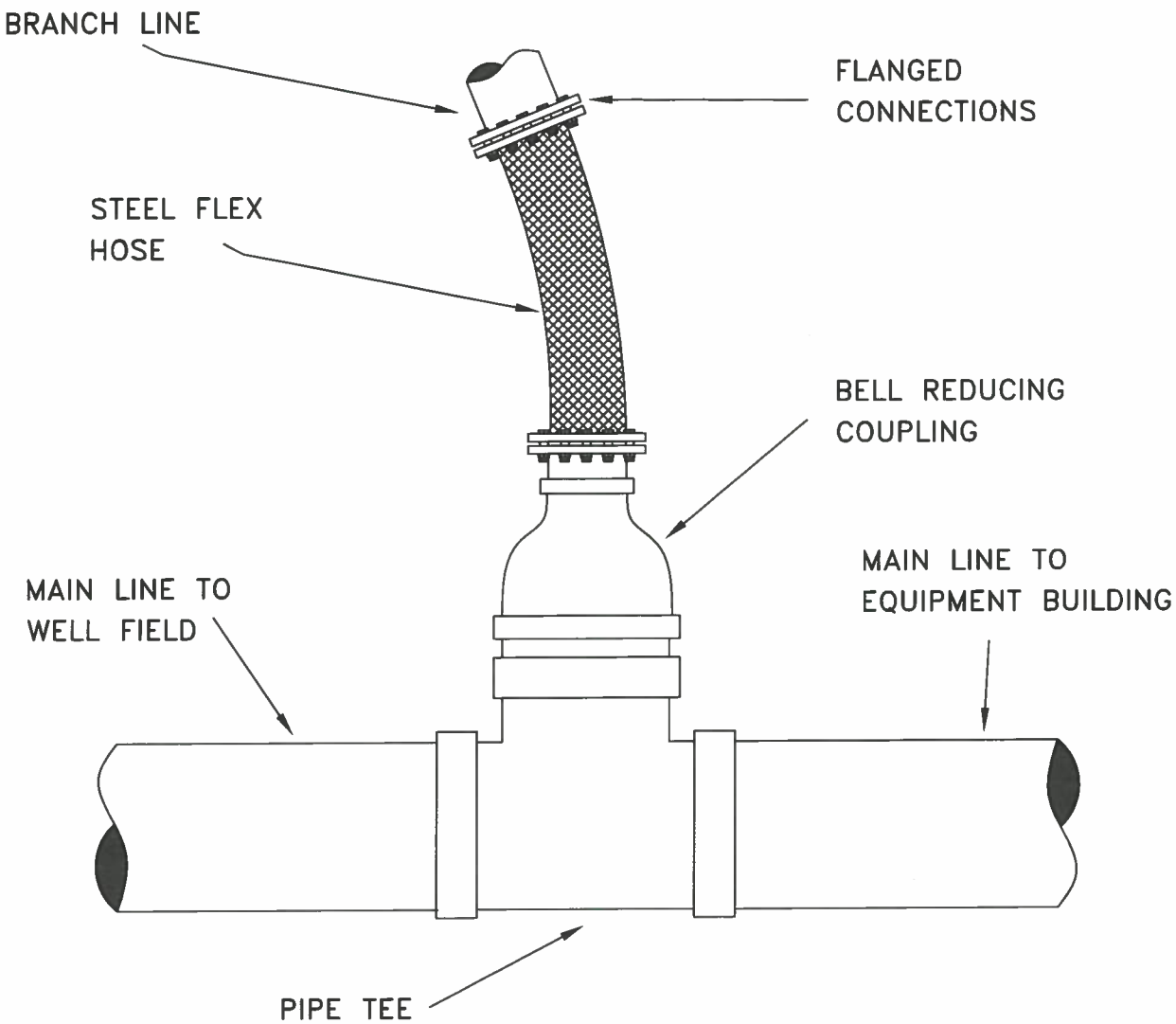

LICENSED PROFESSIONAL ENGINEER
BRANT A. SMITH
062-064184
STATE OF ILLINOIS

TO THE BEST OF MY KNOWLEDGE, INFORMATION, AND BELIEF, CONSTRUCTION WAS COMPLETED IN ACCORDANCE WITH THIS DOCUMENT.

XDD
STRATEGIC. ENVIRONMENTAL. SOLUTIONS.

NOTES:

- REFER TO FIGURES 4A AND 4B FOR SOIL VAPOR EXTRACTION AND AIR INJECTION PIPING SPECIFICATIONS, RESPECTIVELY.
- BRANCH LINES ARE INSTALLED WITH AN APPROXIMATE ANGLE OF 105 DEGREES FROM THE MAIN LINES

SCALE: NOT TO SCALE	TITLE: MAIN LINE TO BRANCH LINE FLEX HOSE CONNECTION DETAIL F W.G. KRUMMRICH FACILITY SAUGET, IL
DATE: FEBRUARY 2012	
PROJECT NO.: 11002	
CLIENT: SOLUTIA INC.	
DRAWN BY: MAW	DRAWING NO.: FIGURE 8F
CHECKED BY: DK	REV: 1
PROJ. MGMT. APPROVAL: DK	

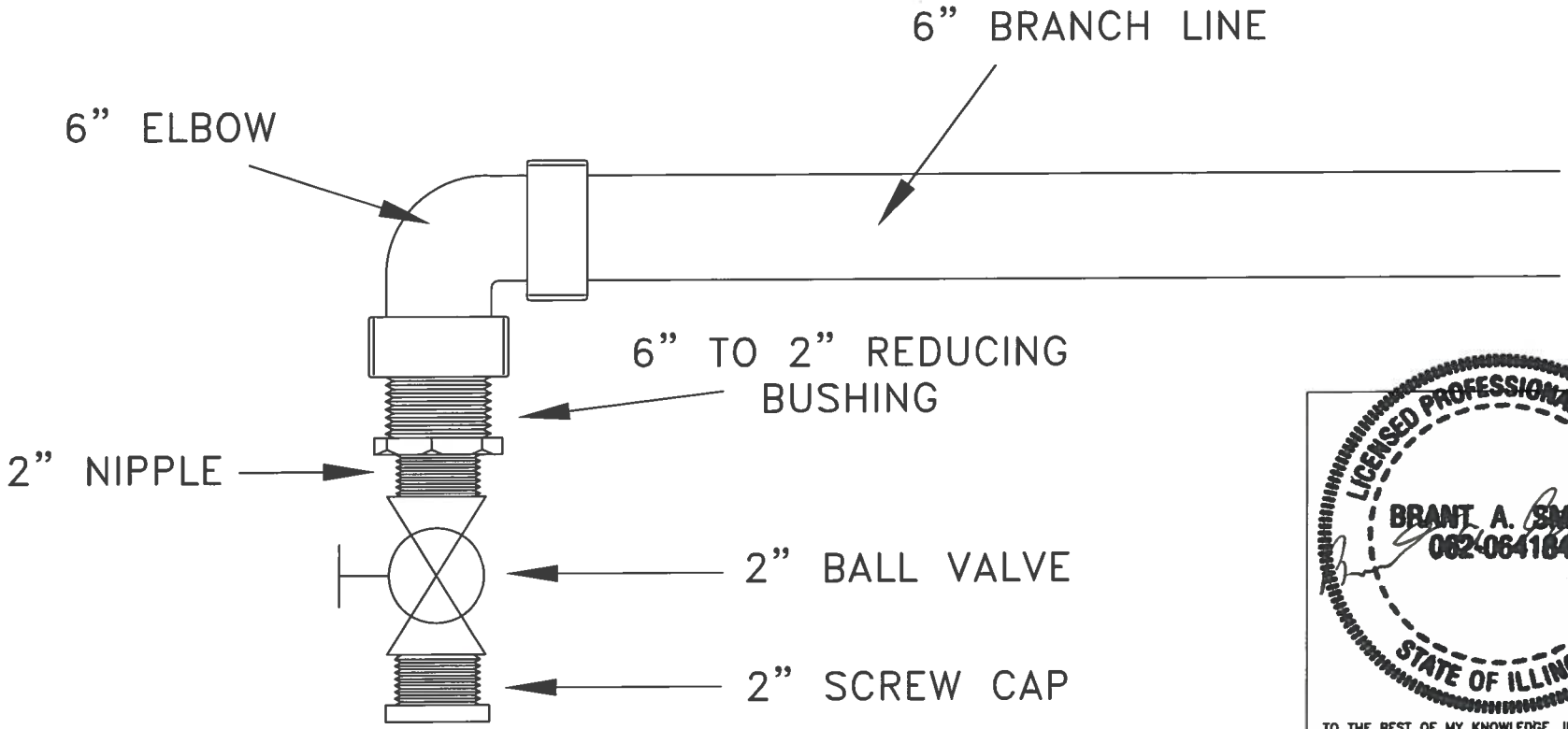

LICENSED PROFESSIONAL ENGINEER
BRANT A. SMITH
062-064184
STATE OF ILLINOIS

TO THE BEST OF MY KNOWLEDGE, INFORMATION, AND BELIEF, CONSTRUCTION WAS COMPLETED IN ACCORDANCE WITH THIS DOCUMENT.

NOTES:

- REFER TO FIGURES 4A AND 4B FOR SOIL VAPOR EXTRACTION AND AIR INJECTION PIPING SPECIFICATIONS
- AIR INJECTION CLEANOUTS ARE CONSTRUCTED OF SCHED. 80 CHLORINATED POLYVINYL CHLORIDE PIPING
- SOIL VAPOR EXTRACTION CLEANOUTS ARE CONSTRUCTED OF SCHED. 40 POLYVINYL CHLORIDE PIPING

XDD
STRATEGIC. ENVIRONMENTAL. SOLUTIONS.

SCALE: NOT TO SCALE	TITLE: SVE AND AI PIPING CLEANOUTS DETAIL G W.G. KRUMMRICH FACILITY SAUGET, IL
DATE: FEBRUARY 2012	
PROJECT NO.: 11002	
CLIENT: SOLUTIA INC.	
DRAWN BY: JTH	DRAWING NO.: FIGURE 8G
CHECKED BY: ELS	REV: 2
PROJ. MGMT. APPROVAL: SCC	

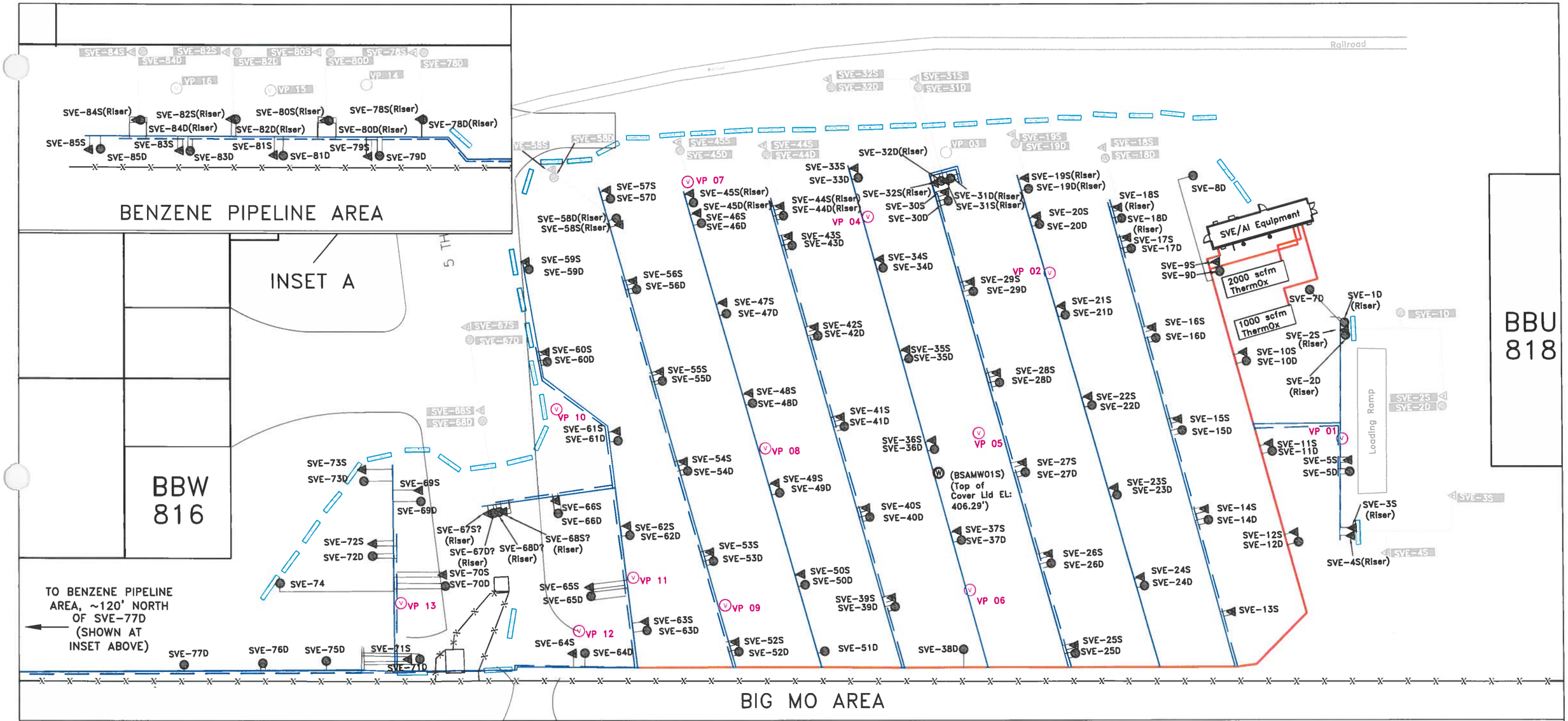

LEGEND

- = ABOVE GRADE DEEP WELL
- = ABOVE GRADE SHALLOW WELL
- = BELOW GRADE DEEP WELL
- = BELOW GRADE SHALLOW WELL
- = MONITORING WELL
- = VAPOR PROBE
- = BELOW GRADE VAPOR PROBE
- = FENCELINE
- = JERSEY BARRIER
- = BELOW GRADE 2" CARBON STEEL PIPING (APPROXIMATE LOCATION)

- = 2" ABOVE GRADE SVE SCHEDULE 40 PVC/AI SCHEDULE 80 CPVC PIPING (SUPPORTS HAVE A MAXIMUM SPACING INTERVAL OF 5 FEET)
- = 6" ABOVE GRADE SVE SCHEDULE 40 PVC/AI SCHEDULE 80 CPVC PIPING (SUPPORTS HAVE A MAXIMUM SPACING INTERVAL OF 6.5 FEET)
- = 12" ABOVE GRADE SVE SCHEDULE 40 PVC/SCHEDULE 80 CPVC PIPING (SUPPORTS HAVE A MAXIMUM SPACING INTERVAL OF 8 FEET)

NOTES:

- ALL ABOVE GRADE SVE BRANCH AND MANIFOLD PIPING IS HEAT TRACED AND INSULATED
- ALL ABOVE GRADE AI BRANCH AND MANIFOLD PIPING IS INSULATED
- CLEANOUTS ARE INSTALLED AT THE TERMINUS OF ALL BRANCH AND MAIN SVE LINES (FIGURE 8G)

LICENSED PROFESSIONAL ENGINEER
BRANT A. SMITH
062-064184
STATE OF ILLINOIS

TO THE BEST OF MY KNOWLEDGE, INFORMATION, AND BELIEF, CONSTRUCTION WAS COMPLETED IN ACCORDANCE WITH THIS DOCUMENT.

20' 0' 20' 40'

XDD
STRATEGIC. ENVIRONMENTAL. SOLUTIONS.

SCALE: AS SHOWN	TITLE: PIPE SUPPORT SPACING DETAILS W.G. KRUMMRICH FACILITY SAUGET, IL
DATE: FEBRUARY 2012	
PROJECT NO.: 11002	
CLIENT: SOLUTIA INC.	
DRAWN BY: JDA	DRAWING NO.: FIGURE 9
CHECKED BY: DK	REV: 3
PROJ. MGMT. APPROVAL: DK	

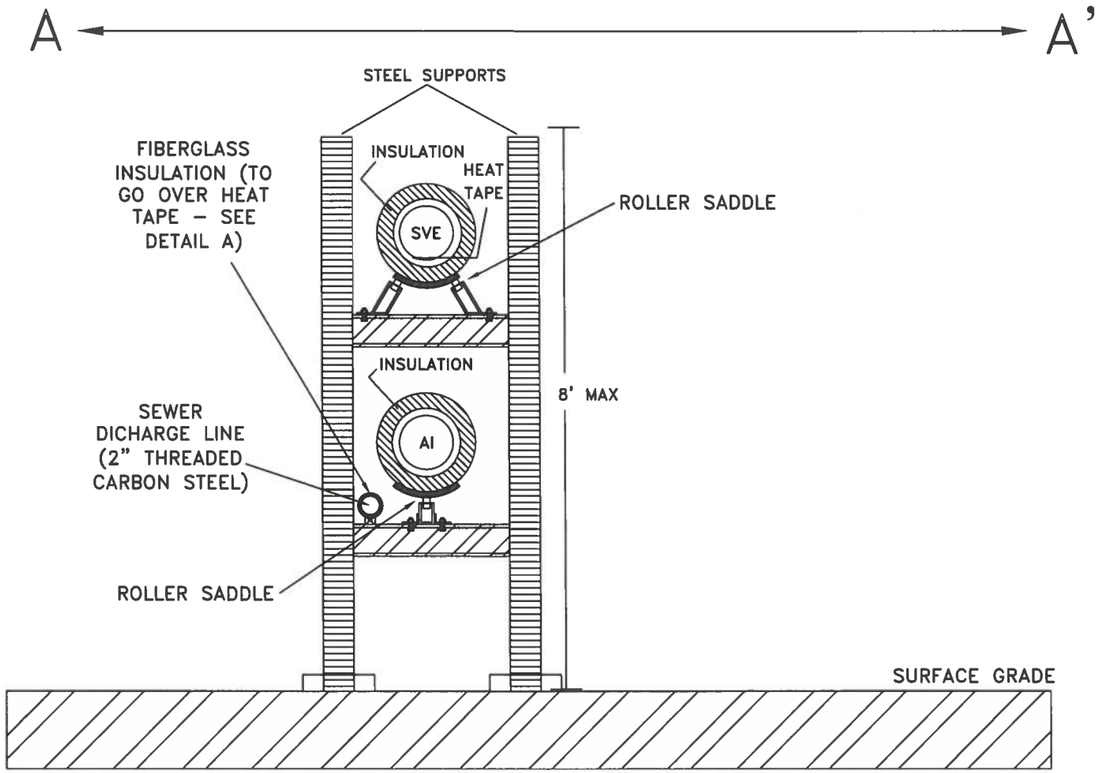

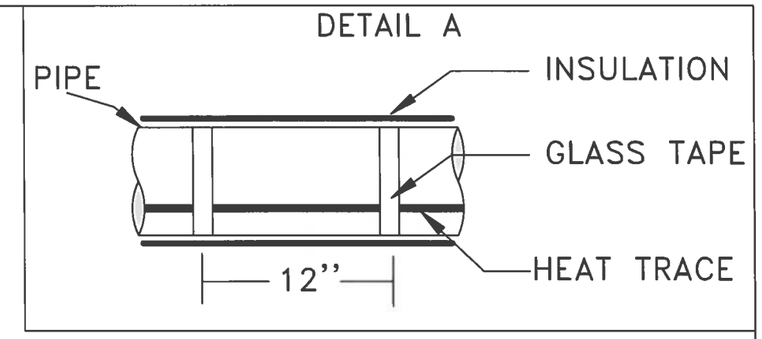

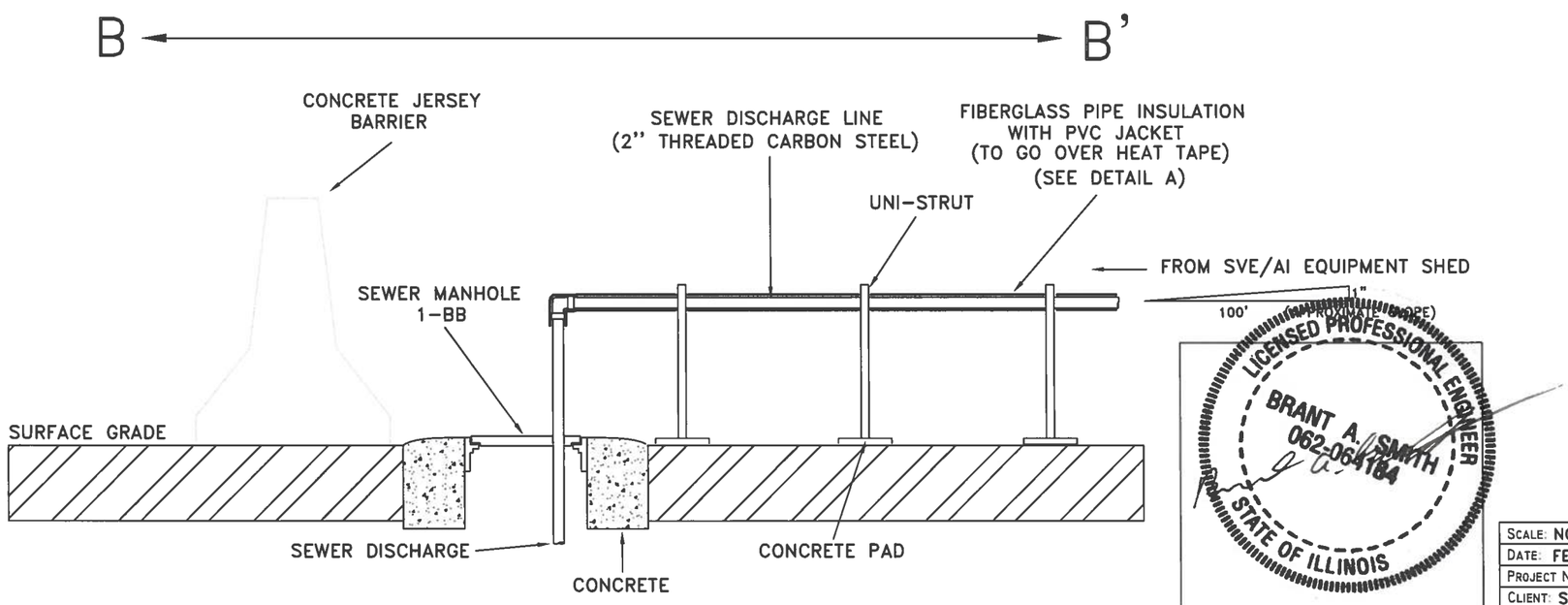

NOTES:

- PVC = POLYVINYL CHLORIDE
- JERSEY BARRIERS HAVE BEEN PLACED AROUND THE SEWER DISCHARGE LINE CONNECTION TO SEWER MANHOLE 1-BB.
- SEWER DISCHARGE PIPING SLOPES APPROXIMATE 1"/100' DOWNWARD FROM THE SVE/AI EQUIPMENT SHED TOWARD THE SEWER MANHOLE, 1-BB.

LICENSED PROFESSIONAL ENGINEER
BRANT A. SMITH
062-064184
STATE OF ILLINOIS

TO THE BEST OF MY KNOWLEDGE, INFORMATION, AND BELIEF, CONSTRUCTION WAS COMPLETED IN ACCORDANCE WITH THIS DOCUMENT.

XDD
STRATEGIC. ENVIRONMENTAL. SOLUTIONS.

SCALE: NOT TO SCALE	TITLE: SVE/AI PIPE CONSTRUCTION AND SEWER DISCHARGE CONNECTION DETAILS W.G. KRUMMRICH FACILITY SAUGET, IL
DATE: FEBRUARY 2012	
PROJECT NO.: 11002	
CLIENT: SOLUTIA INC.	
DRAWN BY: JDA	DRAWING NO.: FIGURE 10
CHECKED BY: SCC	REV: 4
PROJ. MGMT. APPROVAL: SCC	

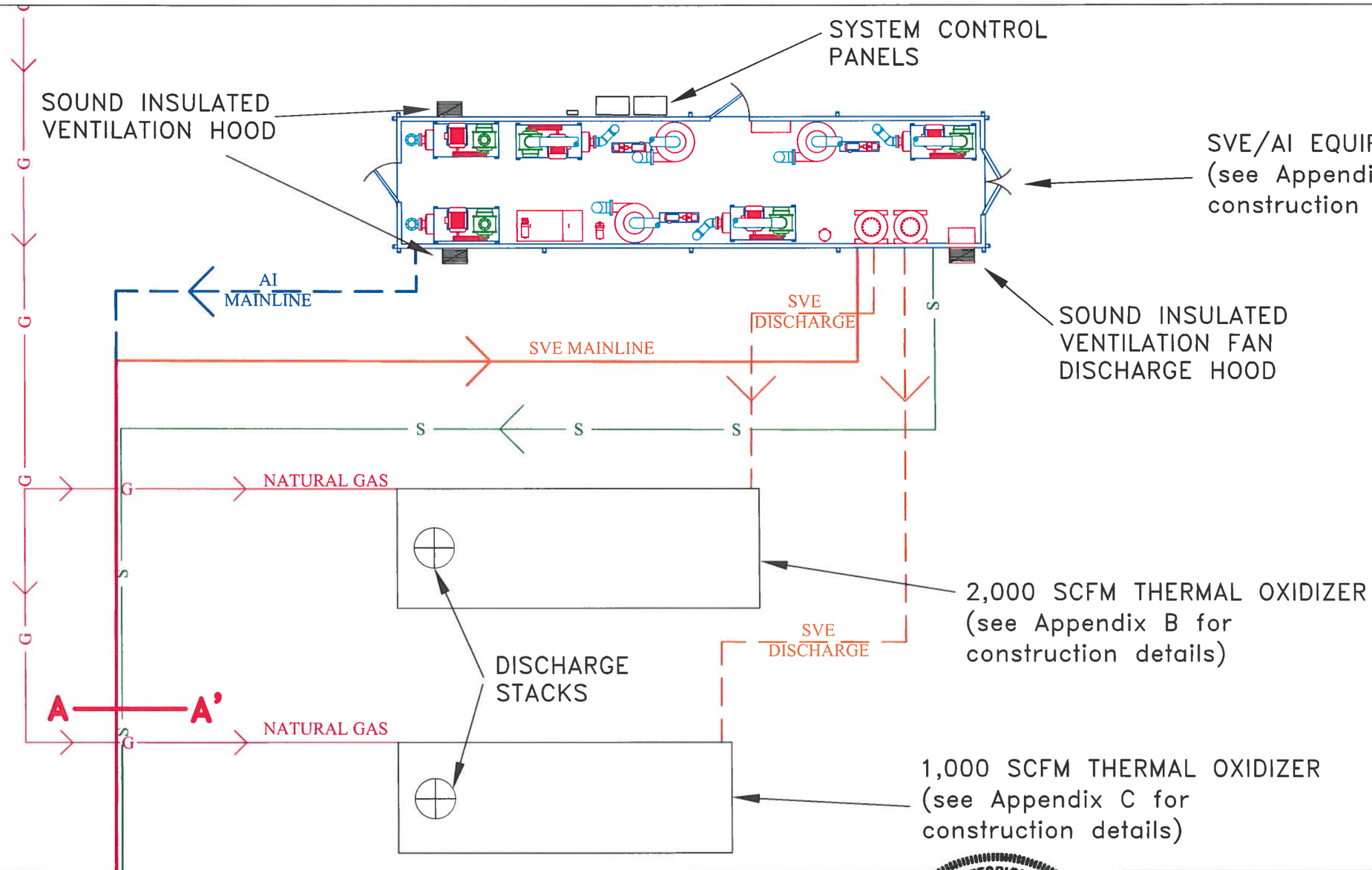

LEGEND

- —S— = SEWER LINE
- —G— = NATURAL GAS LINE
- = 12" ABOVE GRADE STEEL AI PIPING
- = 12" ABOVE GRADE SVE SCHEDULE 40 PVC PIPING
- = 12" STEEL AI AND PVC SVE PIPING AND SUPPORTS
- = 12" ABOVE GRADE SVE STEEL DISCHARGE PIPING

NOTE:

- REFER TO FIGURE 10 FOR CROSS SECTION A–A'

LICENSED PROFESSIONAL ENGINEER
BRANT A. SMITH
062-054184
STATE OF ILLINOIS

TO THE BEST OF MY KNOWLEDGE, INFORMATION, AND BELIEF, CONSTRUCTION WAS COMPLETED IN ACCORDANCE WITH THIS DOCUMENT.

XDD
STRATEGIC. ENVIRONMENTAL. SOLUTIONS.

SCALE: NOT TO SCALE	TITLE: EQUIPMENT LAYOUT AND MATERIAL FLOW W.G. KRUMMRICH FACILITY SAUGET, IL
DATE: FEBRUARY 2012	
PROJECT NO.: 11002	
CLIENT: SOLUTIA INC.	
DRAWN BY: JDA	DRAWING NO.: FIGURE 11
CHECKED BY: DK	REV: 2
PROJ. MGMT. APPROVAL: DK	

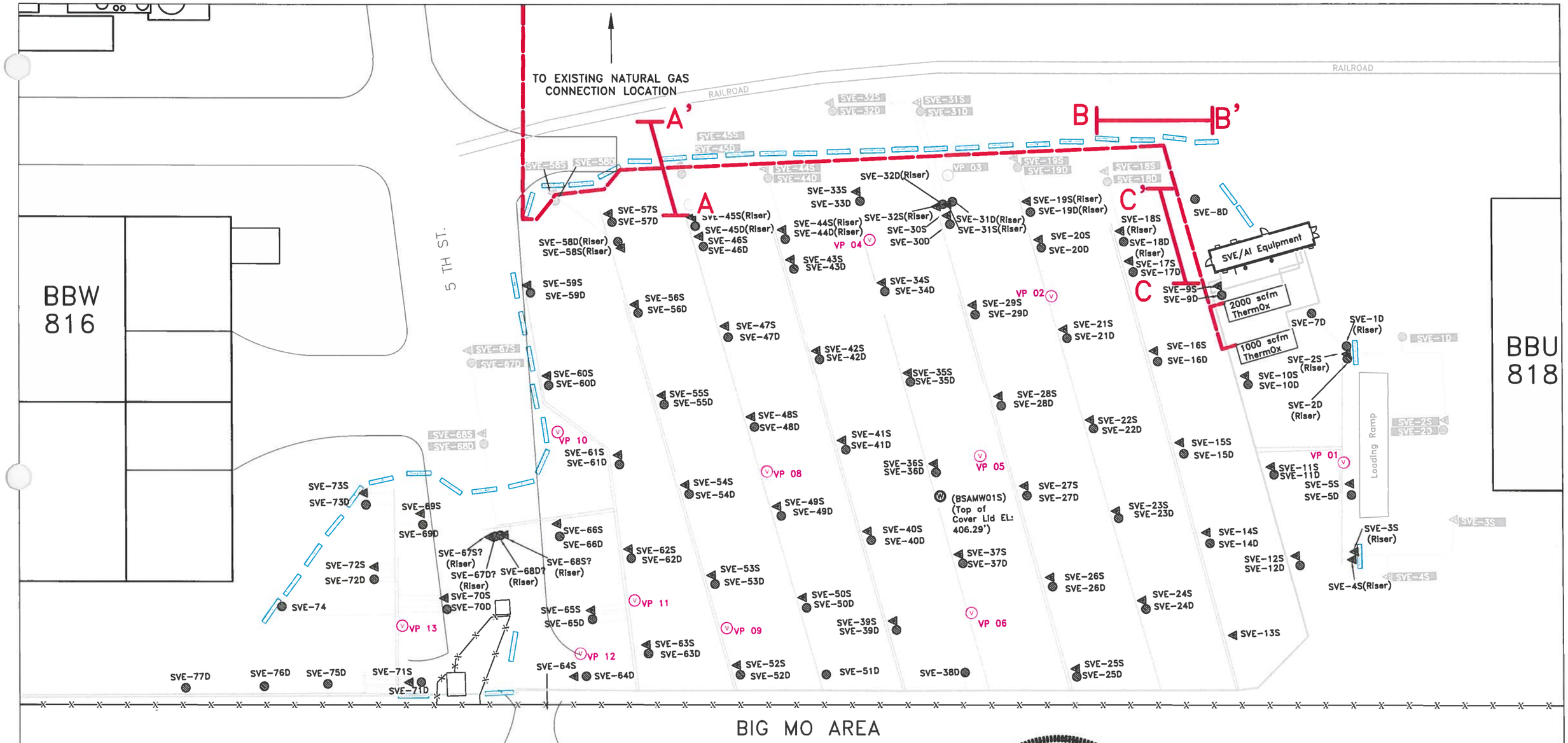

LEGEND

- = ABOVE GRADE DEEP WELL
- = ABOVE GRADE SHALLOW WELL
- = BELOW GRADE DEEP WELL
- = BELOW GRADE SHALLOW WELL
- = MONITORING WELL
- = VAPOR PROBE
- = BELOW GRADE VAPOR PROBE
- = FENCELINE
- = GAS LINE
- = SVE AND AI PROCESS PIPING
- = JERSEY BARRIER

NOTE:

- REFER TO FIGURE 12B FOR CROSS SECTIONS A–A', B–B', AND C–C'

LICENSED PROFESSIONAL ENGINEER
BRANT A. SMITH
062-064184
STATE OF ILLINOIS

TO THE BEST OF MY KNOWLEDGE, INFORMATION, AND BELIEF, CONSTRUCTION WAS COMPLETED IN ACCORDANCE WITH THIS DOCUMENT.

20' 0' 20' 40'

XDD
STRATEGIC. ENVIRONMENTAL. SOLUTIONS.

SCALE: AS SHOWN	TITLE: NATURAL GAS UTILITIES MAP W.G. KRUMMRICH FACILITY SAUGET, IL
DATE: FEBRUARY 2012	
PROJECT NO.: 11002	
CLIENT: SOLUTIA INC.	
DRAWN BY: JDA	DRAWING NO.: FIGURE 12A
CHECKED BY: DK	REV: 3
PROJ. MGMT. APPROVAL: DK	

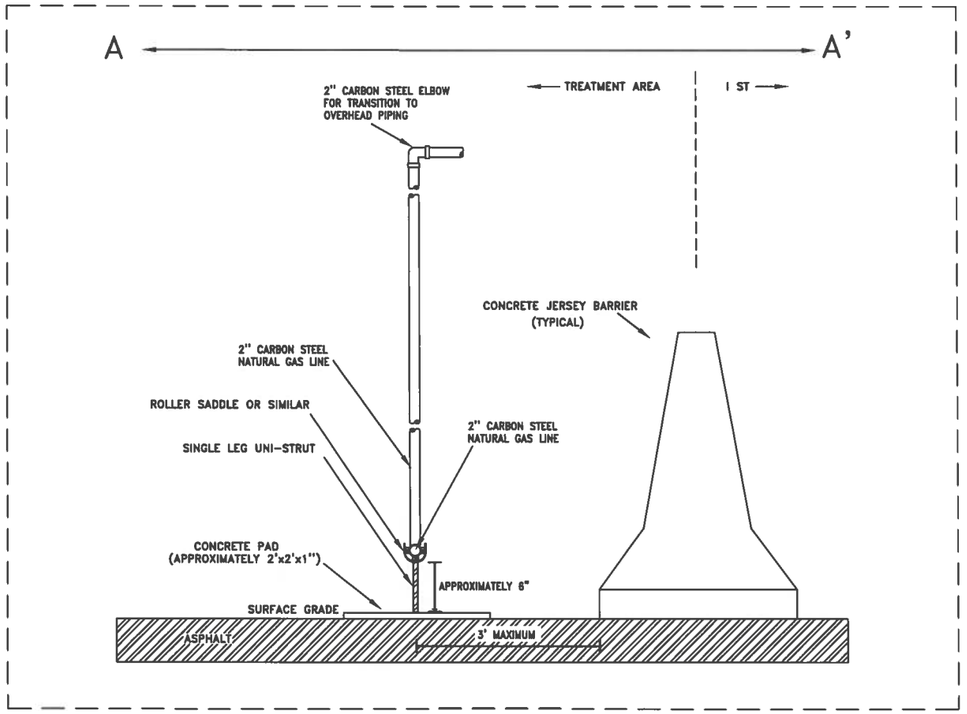

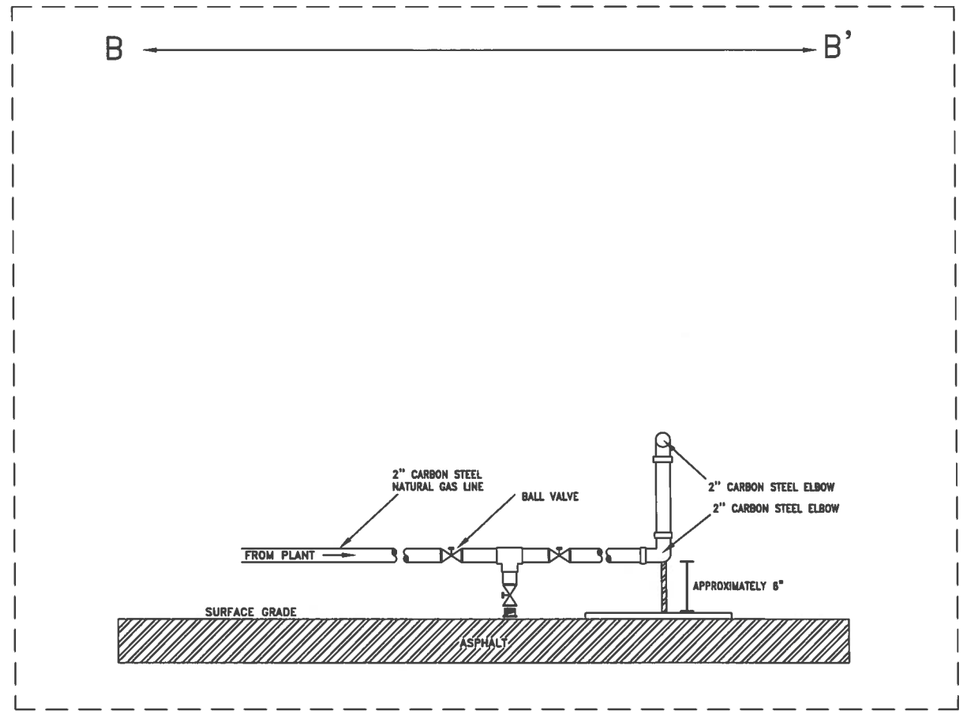

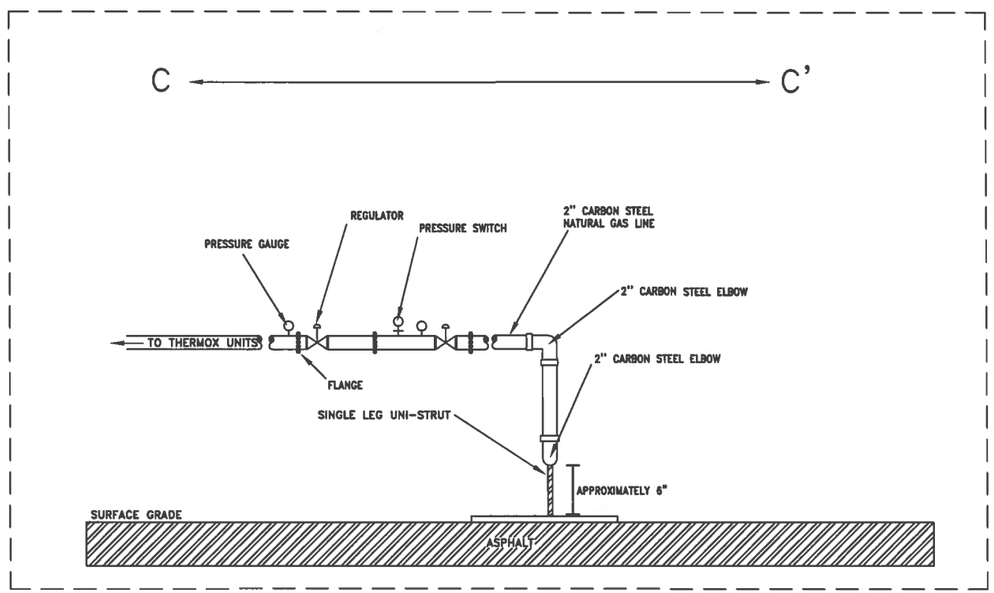

NOTES:

- ALL PIPE AND FITTING CONNECTIONS WELDED FROM EXISTING CONNECTION TO REGULATORS. FITTINGS THREADED PAST REGULATORS TO THERMOX UNITS.
- ACTUAL REGULATOR SIZE AND SPECIFICATIONS WERE DETERMINED BASED ON THE THERMAL OXIDIZER UNIT FLOW AND PRESSURE REQUIREMENTS. TYPICAL OPERATING RANGE FOR NATURAL GAS IS 2 TO 5 PSI.
- HORIZONTAL OVERHEAD PIPING IS BRACED TO THE EXISTING PROCESS PIPING SUPPORTS.
- VERTICAL PIPING IS BRACED TO A PROCESS PIPING SUPPORT STAND AT APPROXIMATELY 8' SPACING.
- JERSEY BARRIERS ARE PLACED ALONG THE NATURAL GAS LINE, VAVLES, AND REGULATORS.

LICENSED PROFESSIONAL ENGINEER
BRANT A. SMITH
062-064184
STATE OF ILLINOIS

TO THE BEST OF MY KNOWLEDGE, INFORMATION, AND BELIEF, CONSTRUCTION WAS COMPLETED IN ACCORDANCE WITH THIS DOCUMENT.

XDD
STRATEGIC. ENVIRONMENTAL. SOLUTIONS.

SCALE: NOT TO SCALE	TITLE: NATURAL GAS CONNECTION DETAILS W.G. KRUMMRICH FACILITY SAUGET, IL
DATE: FEBRUARY 2012	
PROJECT NO.: 11002	
CLIENT: SOLUTIA INC.	
DRAWN BY: JDA	DRAWING NO.: FIGURE 12B
CHECKED BY: DK	REV: 4
PROJ. MGMT. APPROVAL: DK	

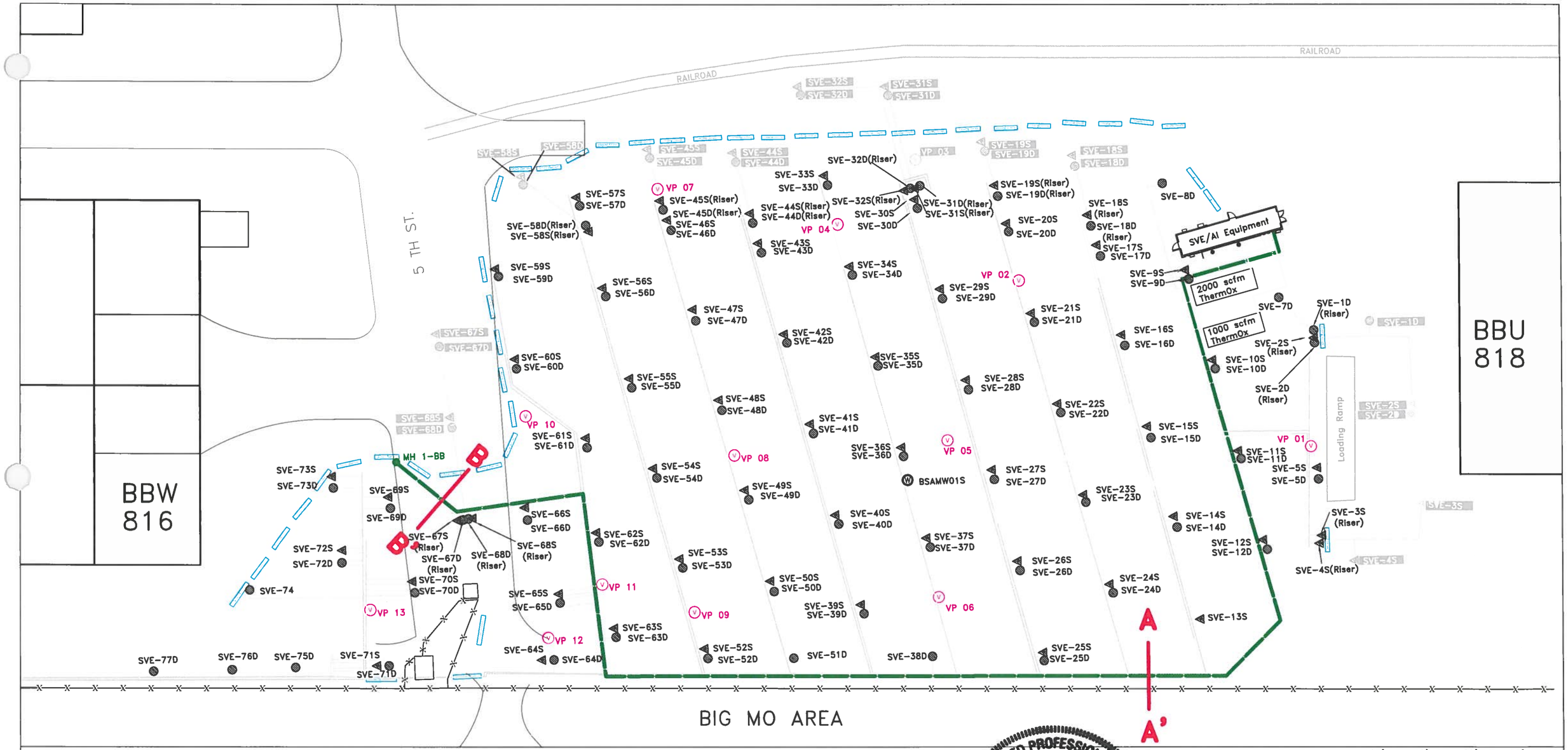

LEGEND

- = ABOVE GRADE DEEP WELL
- = ABOVE GRADE SHALLOW WELL
- = BELOW GRADE DEEP WELL
- = BELOW GRADE SHALLOW WELL
- = MONITORING WELL
- = VAPOR PROBE
- = BELOW GRADE VAPOR PROBE
- = SEWER MANHOLE
- = FENCELINE
- = SVE AND AIR PROCESS PIPING
- = JERSEY BARRIER
- = SEWER LINE

NOTES:

- THE SEWER LINE IS INSULATED AND HEAT TRACED FOR FREEZE PROTECTION
- REFER TO FIGURE 10 FOR CROSS SECTIONS A–A' AND B–B'

LICENSED PROFESSIONAL ENGINEER
BRANT A. SMITH
062-064184
STATE OF ILLINOIS

TO THE BEST OF MY KNOWLEDGE, INFORMATION, AND BELIEF, CONSTRUCTION WAS COMPLETED IN ACCORDANCE WITH THIS DOCUMENT.

20' 0' 20' 40'

XDD
STRATEGIC. ENVIRONMENTAL. SOLUTIONS.

SCALE: AS SHOWN	TITLE: SEWER UTILITIES MAP W.G. KRUMMRICH FACILITY SAUGET, IL
DATE: FEBRUARY 2012	
PROJECT NO.: 11002	
CLIENT: SOLUTIA INC.	
DRAWN BY: JDA	DRAWING NO.: FIGURE 13
CHECKED BY: DK	REV: 3
PROJ. MGMT. APPROVAL: DK	

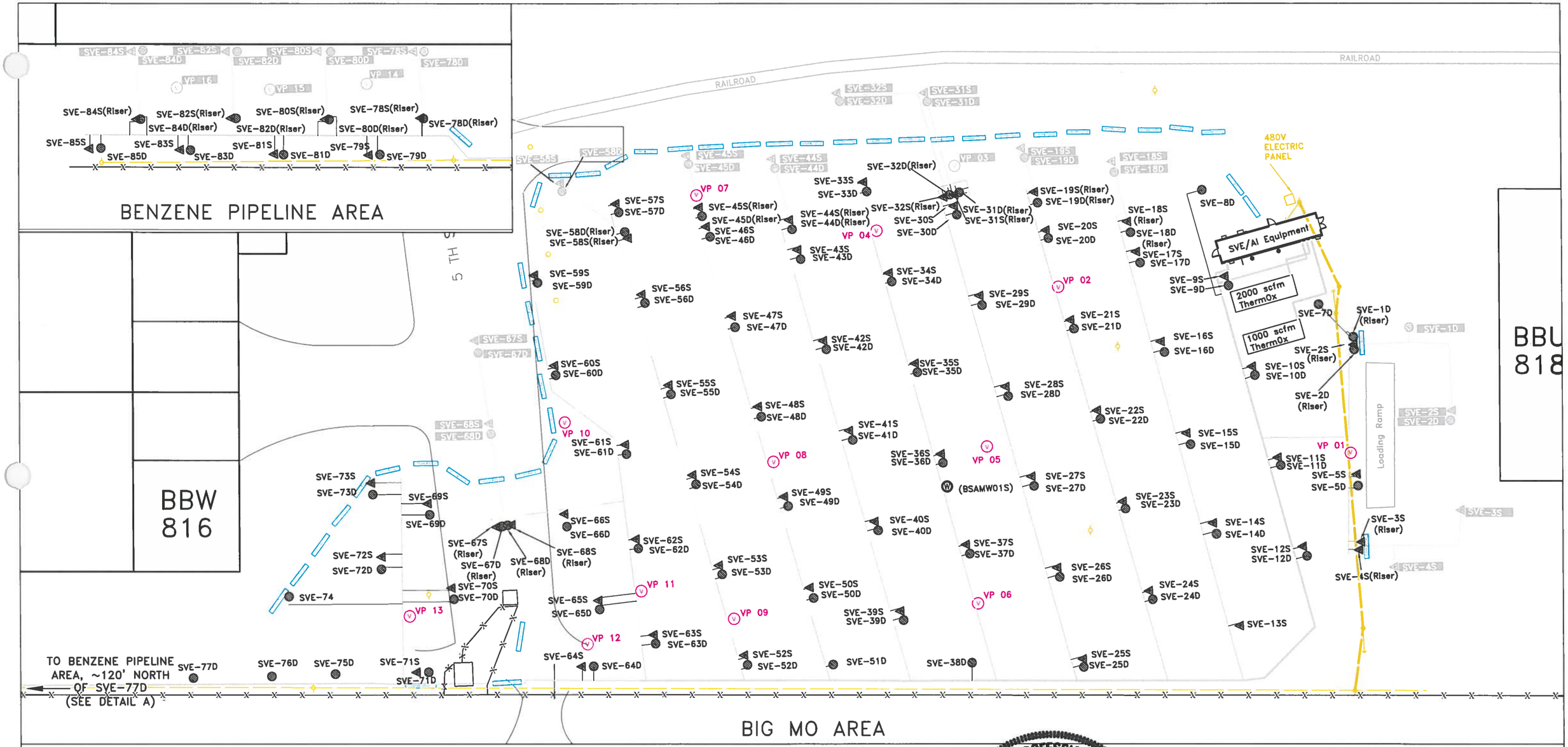

LEGEND

- = ABOVE GRADE DEEP WELL
- = ABOVE GRADE SHALLOW WELL
- = BELOW GRADE DEEP WELL
- = BELOW GRADE SHALLOW WELL
- = MONITORING WELL
- = VAPOR PROBE
- = BELOW GRADE VAPOR PROBE
- = ANCHOR
- = FENCELINE
- = ELECTRIC LINE
- = BELOW GRADE 2" CARBON STEEL PIPING (APPROXIMATE LOCATION)
- = 2" ABOVE GRADE SCHEDULE 80 CPVC PIPING
- = 6" ABOVE GRADE INSULATED AND HEAT TRACED SVE SCHEDULE 40 PVC PIPING
- = 12" ABOVE GRADE INSULATED AND HEAT TRACED SVE SCHEDULE 40 PVC PIPING
- = JERSEY BARRIER
- = POWER POLE

NOTE:

- ONLY 480V POWER FEEDERS ARE INDICATED, NOT ALL 480 VOLT CABLES

LICENSED PROFESSIONAL ENGINEER
BRANT A. SMITH
062-064184
STATE OF ILLINOIS

TO THE BEST OF MY KNOWLEDGE, INFORMATION, AND BELIEF, CONSTRUCTION WAS COMPLETED IN ACCORDANCE WITH THIS DOCUMENT.

20' 0' 20' 40'

XDD
STRATEGIC. ENVIRONMENTAL. SOLUTIONS.

SCALE: AS SHOWN	TITLE: ELECTRICAL UTILITIES MAP W.G. KRUMMRICH FACILITY SAUGET, IL
DATE: FEBRUARY 2012	
PROJECT NO.: 11002	
CLIENT: SOLUTIA INC.	
DRAWN BY: JDA	DRAWING NO.: FIGURE 14
CHECKED BY: DK	REV: 2
PROJ. MGMT. APPROVAL: DK	

APPENDIX A

SVE Equipment P&IDs and Construction Details

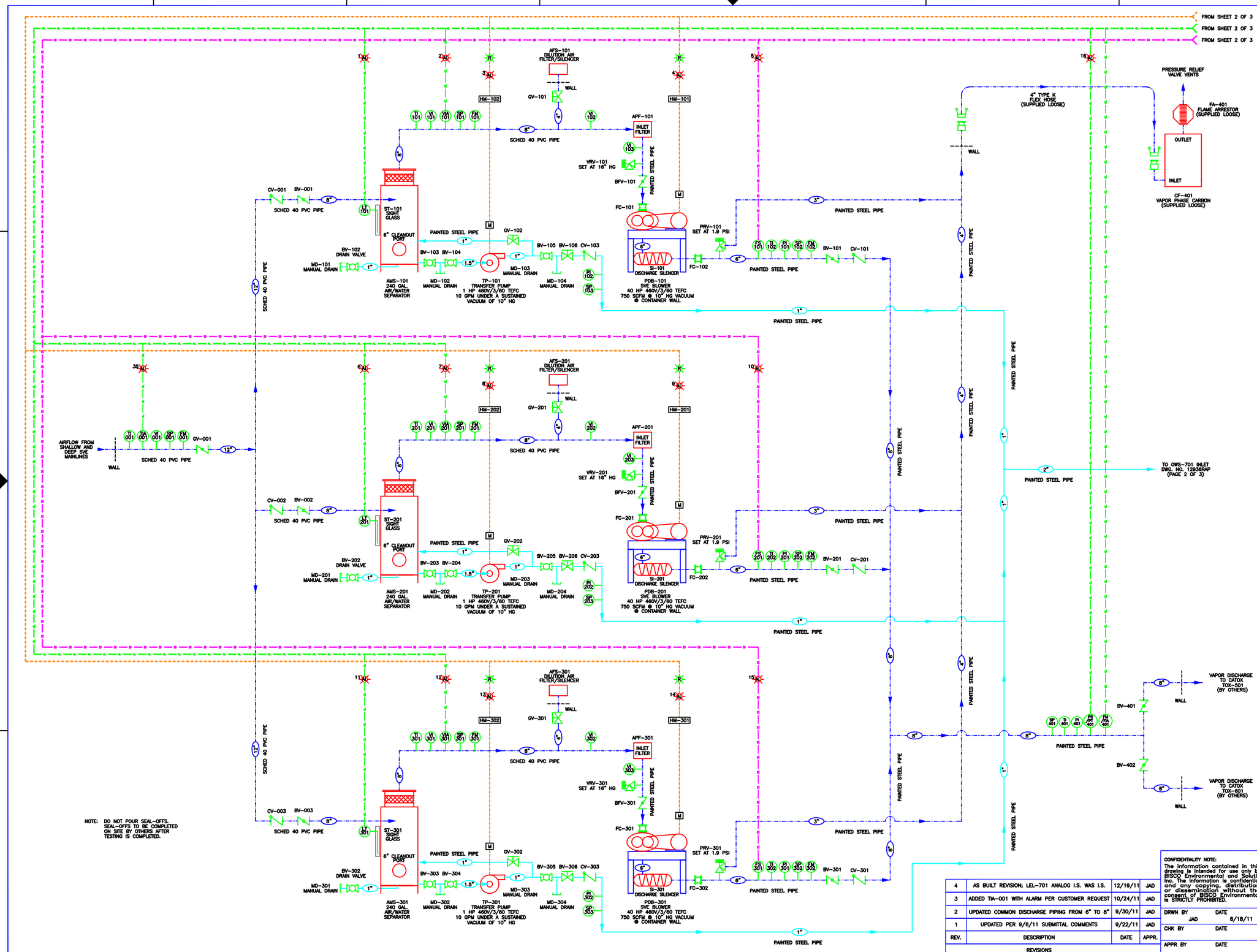

NOTE: DO NOT POUR SEAL-OFFS. SEAL-OFFS TO BE COMPLETED ON SITE BY OTHERS AFTER TESTING IS COMPLETED.

LEGEND

AC	AIR COMPRESSOR
AFS	AIR FILTER/SILENCER
AMS	AIR MOISTURE SEPARATOR
APF	AIR PARTICULATE FILTER
BFV	BUTTERFLY VALVE
BPF	BAG PARTICULATE FILTER
BV	BALL VALVE
CF	CARBON FILTER (VAPOR PHASE)
CO	CLEAN OUT
CV	CHECK VALVE
DD	DRY DISCONNECT
FA	FLAME ARRESTOR
FC	FLEX CONNECTOR
FH	FLEXIBLE HOSE
FIA	FLOW INDICATOR ANALOG
FM	FLOW METER
FS	FLOW SWITCH
FT	FLOW TRANSMITTER
GV	GATE VALVE
HM	HOUR METER
LEL	LOWER EXPLOSIVE LIMIT
LGAC	LIQUID PHASE CARBON
LT	LEVEL TRANSMITTER
M	MOTOR
MCP	MASTER CONTROL PANEL
MD	MANUAL DRAIN
NS	NAPL STORAGE
NT	NAPL TANK
OIT	OPERATOR INTERFACE TERMINAL
OWS	OIL WATER SEPARATOR
PDB	POSITIVE DISPLACEMENT BLOWER
PI	PRESSURE INDICATOR
PLC	PROGRAMMABLE LOGIC CONTROLLER
PS	PRESSURE SWITCH
PT	PRESSURE TRANSMITTER
PRV	PRESSURE RELIEF VALVE
QCV	QUICK CONNECT VALVE
SI	SILENCER
SP	SAMPLE PORT
ST	SITE TUBE
TI	TEMPERATURE INDICATOR
TIA	TEMPERATURE INDICATOR ANALOG
TOX	THERMAL OXIDIZER
TP	TRANSFER PUMP
TSH	TEMPERATURE SWITCH HIGH
VI	VACUUM INDICATOR
VIA	VACUUM INDICATOR ANALOG
VRV	VACUUM RELIEF VALVE
PS/PT	PRESSURE SWITCH / PRESSURE TRANSMITTER
	BALL VALVE
	BUTTERFLY VALVE
	CHECK VALVE
	GATE VALVE
	RELIEF VALVE
	VACUUM BREAKER
	MALE CAMLOCK
	FEMALE CAMLOCK
	PLUGGED TEE (MANUAL DRAIN)
	FLAME ARRESTER
	ALARM LIGHT
	WARNING LIGHT
	EMERGENCY STOP
	RUN LIGHT
	AIR LINE
	INTRINSICALLY SAFE ANALOG LINE
	INTRINSICALLY SAFE LINE
	CONTROL LINE
	WATER LINE
	BREAK

ALARMS

1. AIR MOISTURE SEPARATOR (AMS-101) HIGH HIGH LEVEL
2. SVE BLOWER (PDB-101) LOW VACUUM
3. TRANSFER PUMP (TP-101) MOTOR OVERLOAD
4. SVE BLOWER (PDB-101) MOTOR OVERLOAD
5. SVE BLOWER (PDB-101) LOW FLOW
6. AIR MOISTURE SEPARATOR (AMS-201) HIGH HIGH LEVEL
7. SVE BLOWER (PDB-201) LOW VACUUM
8. TRANSFER PUMP (TP-201) MOTOR OVERLOAD
9. SVE BLOWER (PDB-201) MOTOR OVERLOAD
10. SVE BLOWER (PDB-201) LOW FLOW
11. AIR MOISTURE SEPARATOR (AMS-301) HIGH HIGH LEVEL
12. SVE BLOWER (PDB-301) LOW VACUUM
13. TRANSFER PUMP (TP-301) MOTOR OVERLOAD
14. SVE BLOWER (PDB-301) MOTOR OVERLOAD
15. SVE BLOWER (PDB-301) LOW FLOW
16. COMBINED SVE SYSTEM DISCHARGE HIGH PRESSURE
35. COMBINED SVE INFLUENT HIGH TEMPERATURE

REV.	DESCRIPTION	DATE	APPR.
4	AS BUILT REVISION; LEL-701 ANALOG I.S. WAS I.S.	12/19/11	JAD
3	ADDED TIA-001 WITH ALARM PER CUSTOMER REQUEST	10/24/11	JAD
2	UPDATED COMMON DISCHARGE PIPING FROM 6" TO 8"	9/30/11	JAD
1	UPDATED PER 9/6/11 SUBMITTAL COMMENTS	9/22/11	JAD

REVISIONS

CONFIDENTIALITY NOTE:
The information contained in this drawing is intended for use only by BISCO Environmental and Solutia Inc. The information is confidential and any copying, distribution or dissemination without the consent of BISCO Environmental is STRICTLY PROHIBITED.

BISCO Environmental
Soil & Groundwater Remediation Equipment
Taunton, Massachusetts 02780

TITLE
VAPOR EXTRACTION & AIR INJECTION SYSTEM
PROCESS & INSTRUMENTATION DIAGRAM

DRWN BY JAD	DATE 8/18/11	
CHK BY	DATE	SOLUTIA INC. W.G.KRUMMRICH FACILITY – SAUGET, IL — JOB NO. 12936
APPR BY	DATE	

SCALE	SIZE	DWG NO.	SHEET	REV
N/A	D	12936RAP	1 OF 3	4

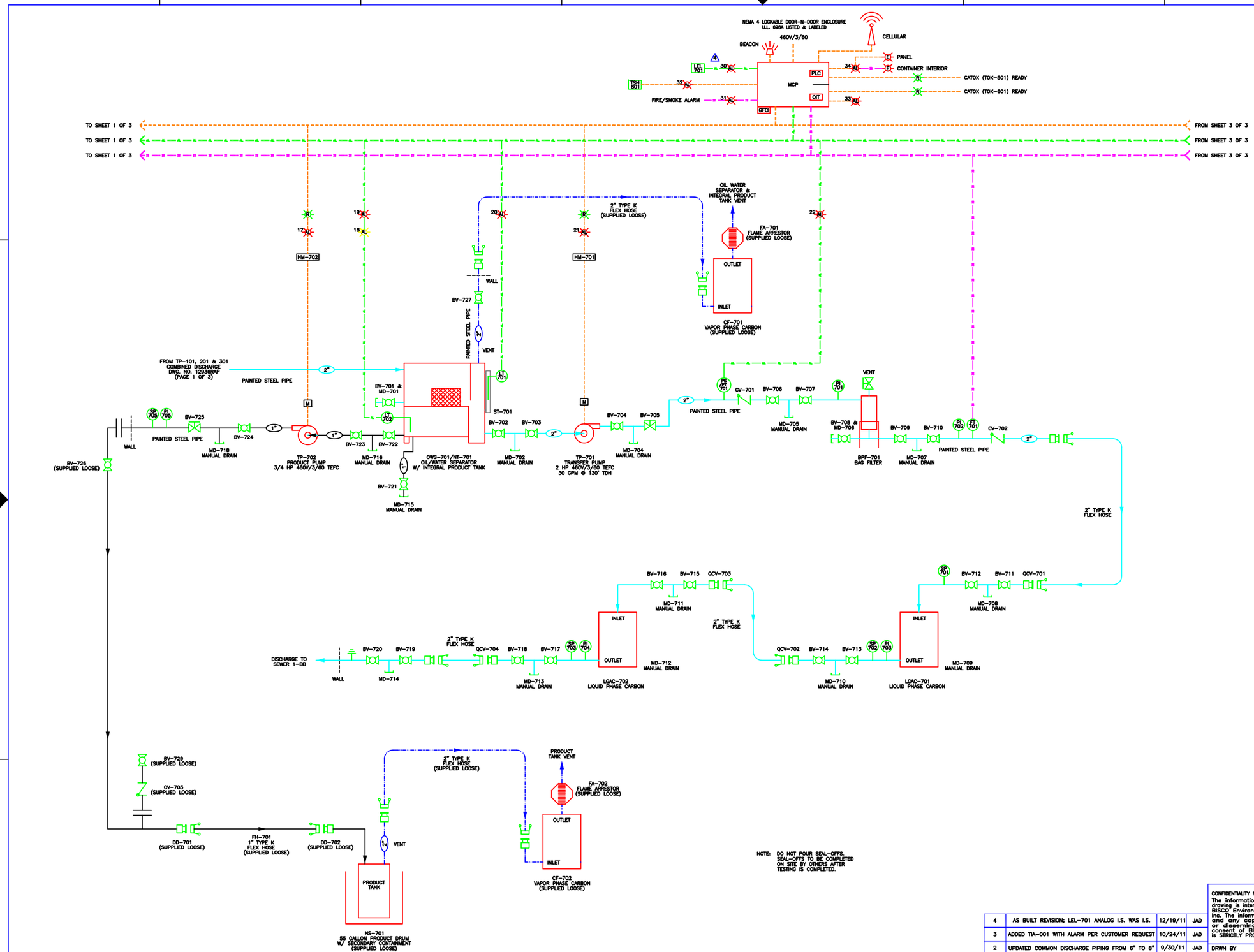

NOTE: DO NOT POUR SEAL-OFFS. SEAL-OFFS TO BE COMPLETED ON SITE BY OTHERS AFTER TESTING IS COMPLETED.

LEGEND

AC	AIR COMPRESSOR
AFS	AIR FILTER/SILENCER
AMS	AIR MOISTURE SEPARATOR
APF	AIR PARTICULATE FILTER
BFV	BUTTERFLY VALVE
BPF	BAG PARTICULATE FILTER
BV	BALL VALVE
CF	CARBON FILTER (VAPOR PHASE)
CO	CLEAN OUT
CV	CHECK VALVE
DD	DRY DISCONNECT
FA	FLAME ARRESTOR
FC	FLEX CONNECTOR
FH	FLEXIBLE HOSE
FIA	FLOW INDICATOR ANALOG
FM	FLOW METER
FS	FLOW SWITCH
FT	FLOW TRANSMITTER
GV	GATE VALVE
HM	HOUR METER
LEL	LOWER EXPLOSIVE LIMIT
LGAC	LIQUID PHASE CARBON
LT	LEVEL TRANSMITTER
M	MOTOR
MCP	MASTER CONTROL PANEL
MD	MANUAL DRAIN
NS	NAPL STORAGE
NT	NAPL TANK
OIT	OPERATOR INTERFACE TERMINAL
OWS	OIL WATER SEPARATOR
PDB	POSITIVE DISPLACEMENT BLOWER
PI	PRESSURE INDICATOR
PLC	PROGRAMMABLE LOGIC CONTROLLER
PS	PRESSURE SWITCH
PT	PRESSURE TRANSMITTER
PRV	PRESSURE RELIEF VALVE
QCV	QUICK CONNECT VALVE
SI	SILENCER
SP	SAMPLE PORT
ST	SITE TUBE
TI	TEMPERATURE INDICATOR
TIA	TEMPERATURE INDICATOR ANALOG
TOX	THERMAL OXIDIZER
TP	TRANSFER PUMP
TSH	TEMPERATURE SWITCH HIGH
VI	VACUUM INDICATOR
VIA	VACUUM INDICATOR ANALOG
VRV	VACUUM RELIEF VALVE
PS/PT	PRESSURE SWITCH / PRESSURE TRANSMITTER
	BALL VALVE
	BUTTERFLY VALVE
	CHECK VALVE
	GATE VALVE
	RELIEF VALVE
	VACUUM BREAKER
	MALE CAMLOCK
	FEMALE CAMLOCK
	PLUGGED TEE (MANUAL DRAIN)
	FLAME ARRESTER
AL	ALARM LIGHT
AL	WARNING LIGHT
E	EMERGENCY STOP
R	RUN LIGHT
	AIR LINE
	INTRINSICALLY SAFE ANALOG LINE
	INTRINSICALLY SAFE LINE
	CONTROL LINE
	WATER LINE
	BREAK

ALARMS

17. TRANSFER PUMP (TP-702) MOTOR OVERLOAD
18. INTEGRAL PRODUCT TANK HIGH LEVEL WARNING
19. INTEGRAL PRODUCT TANK HIGH HIGH LEVEL
20. OIL WATER SEPARATOR (OWS-701) HIGH HIGH LEVEL
21. TRANSFER PUMP (TP-701) MOTOR OVERLOAD
22. BAG FILTER (BPF-701) HIGH PRESSURE
30. HIGH LEL
31. FIRE/SMOKE ALARM (FUTURE)
32. BUILDING INTERIOR HIGH TEMPERATURE
33. VOLTAGE FAULT
34. EMERGENCY STOP

REV.	DESCRIPTION	DATE	APPR.
4	AS BUILT REVISION; LEL-701 ANALOG I.S. WAS I.S.	12/19/11	JAD
3	ADDED TIA-001 WITH ALARM PER CUSTOMER REQUEST	10/24/11	JAD
2	UPDATED COMMON DISCHARGE PIPING FROM 6" TO 8"	9/30/11	JAD
1	UPDATED PER 9/6/11 SUBMITTAL COMMENTS	9/22/11	JAD

REVISIONS

CONFIDENTIALITY NOTE:
The information contained in this drawing is intended for use only by BISCO Environmental and Solutia Inc. The information is confidential and any copying, distribution or dissemination without the consent of BISCO Environmental is STRICTLY PROHIBITED.

DRWN BY JAD DATE 8/18/11
CHK BY DATE
APPR BY DATE

BISCO Environmental
Soil & Groundwater Remediation Equipment
Taunton, Massachusetts 02780

TITLE
VAPOR EXTRACTION & AIR INJECTION SYSTEM
PROCESS & INSTRUMENTATION DIAGRAM

SOLUTIA INC.
W.G.KRUMMRICH FACILITY – SAUGET, IL

JOB NO. 12936

SCALE	SIZE	DWG NO.	SHEET	REV
N/A	D	12936RAP	2 OF 3	4

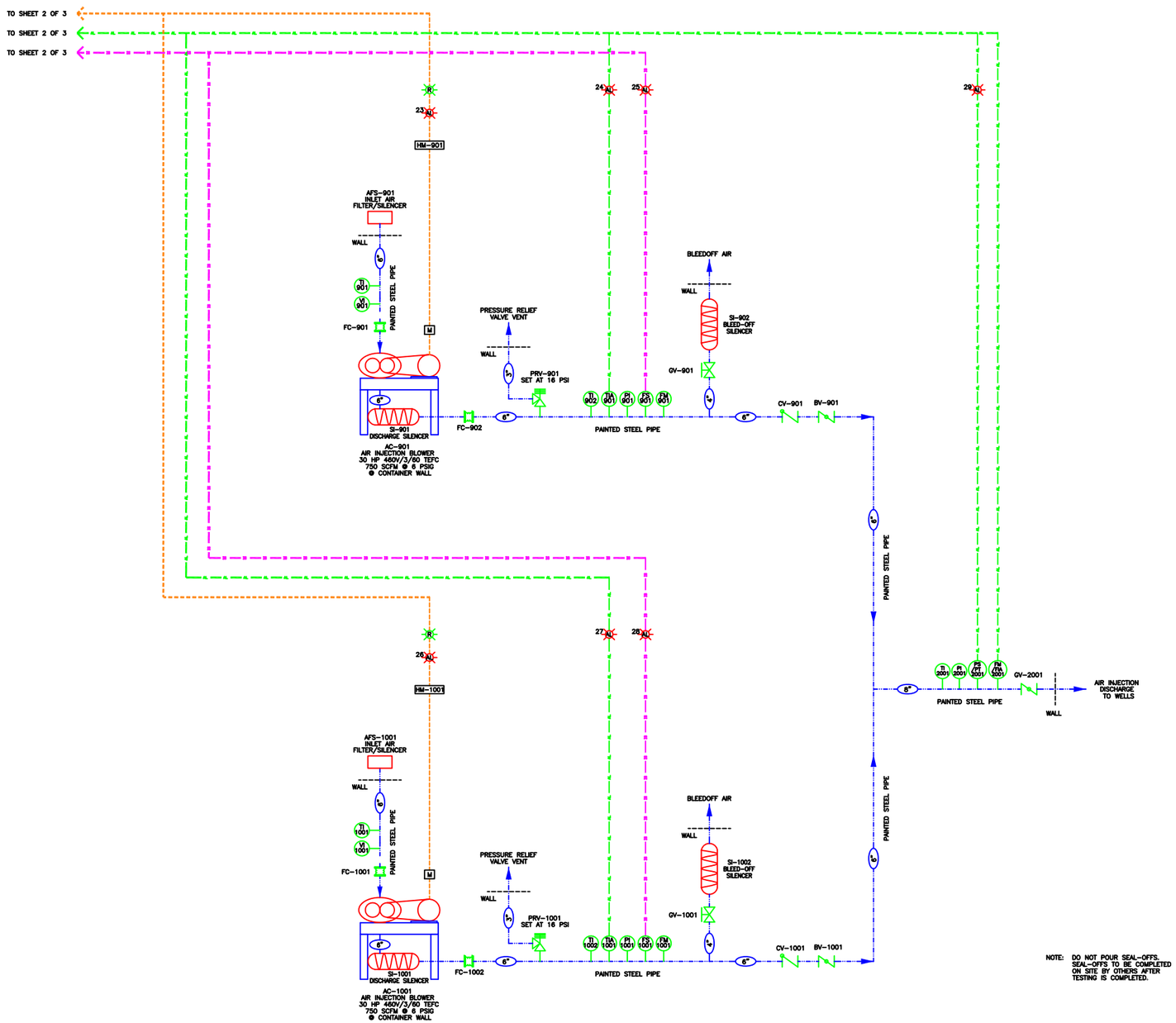

NOTE: DO NOT POUR SEAL-OFFS. SEAL-OFFS TO BE COMPLETED ON SITE BY OTHERS AFTER TESTING IS COMPLETED.

LEGEND

AC	AIR COMPRESSOR
AFS	AIR FILTER/SILENCER
AMS	AIR MOISTURE SEPARATOR
APF	AIR PARTICULATE FILTER
BFV	BUTTERFLY VALVE
BPF	BAG PARTICULATE FILTER
BV	BALL VALVE
CF	CARBON FILTER (VAPOR PHASE)
CO	CLEAN OUT
CV	CHECK VALVE
DD	DRY DISCONNECT
FA	FLAME ARRESTOR
FC	FLEX CONNECTOR
FH	FLEXIBLE HOSE
FIA	FLOW INDICATOR ANALOG
FM	FLOW METER
FS	FLOW SWITCH
FT	FLOW TRANSMITTER
GV	GATE VALVE
HM	HOUR METER
LEL	LOWER EXPLOSIVE LIMIT
LQAC	LIQUID PHASE CARBON
LT	LEVEL TRANSMITTER
M	MOTOR
MCP	MASTER CONTROL PANEL
MD	MANUAL DRAIN
NS	NAPL STORAGE
NT	NAPL TANK
OIT	OPERATOR INTERFACE TERMINAL
OWS	OIL WATER SEPARATOR
PDB	POSITIVE DISPLACEMENT BLOWER
PI	PRESSURE INDICATOR
PLC	PROGRAMMABLE LOGIC CONTROLLER
PS	PRESSURE SWITCH
PT	PRESSURE TRANSMITTER
PRV	PRESSURE RELIEF VALVE
QCV	QUICK CONNECT VALVE
SI	SILENCER
SP	SAMPLE PORT
ST	SITE TUBE
TI	TEMPERATURE INDICATOR
TIA	TEMPERATURE INDICATOR ANALOG
TOX	THERMAL OXIDIZER
TP	TRANSFER PUMP
TSH	TEMPERATURE SWITCH HIGH
VI	VACUUM INDICATOR
VIA	VACUUM INDICATOR ANALOG
VRV	VACUUM RELIEF VALVE
PS/PT	PRESSURE SWITCH / PRESSURE TRANSMITTER
	BALL VALVE
	BUTTERFLY VALVE
	CHECK VALVE
	GATE VALVE
	RELIEF VALVE
	VACUUM BREAKER
	MALE CAMLOCK
	FEMALE CAMLOCK
	PLUGGED TEE (MANUAL DRAIN)
	FLAME ARRESTER
	ALARM LIGHT
	WARNING LIGHT
	EMERGENCY STOP
	RUN LIGHT
	AIR LINE
	INTRINSICALLY SAFE ANALOG LINE
	INTRINSICALLY SAFE LINE
	CONTROL LINE
	WATER LINE
	BREAK

ALARMS

23. AIR INJECTION BLOWER (AC-901) MOTOR OVERLOAD
24. AIR INJECTION BLOWER (AC-901) HIGH TEMPERATURE
25. AIR INJECTION BLOWER (AC-901) LOW FLOW
26. AIR INJECTION BLOWER (AC-1001) MOTOR OVERLOAD
27. AIR INJECTION BLOWER (AC-1001) HIGH TEMPERATURE
28. AIR INJECTION BLOWER (AC-1001) LOW FLOW
29. COMBINED AIR INJECTION SYSTEM HIGH PRESSURE

REV.	DESCRIPTION	DATE	APPR.
4	AS BUILT REVISION; LEL-701 ANALOG I.S. WAS I.S.	12/19/11	JAD
3	ADDED TIA-001 WITH ALARM PER CUSTOMER REQUEST	10/24/11	JAD
2	UPDATED COMMON DISCHARGE PIPING FROM 6" TO 8"	9/30/11	JAD
1	UPDATED PER 9/6/11 SUBMITTAL COMMENTS	9/22/11	JAD

REVISIONS

CONFIDENTIALITY NOTE:
The information contained in this drawing is intended for use only by BISCO Environmental and Solutia Inc. The information is confidential and any copying, distribution or dissemination without the consent of BISCO Environmental is STRICTLY PROHIBITED.

DRWN BY JAD DATE 8/18/11
CHK BY DATE
APPR BY DATE

BISCO Environmental
Soil & Groundwater Remediation Equipment
Taunton, Massachusetts 02780

TITLE
VAPOR EXTRACTION & AIR INJECTION SYSTEM
PROCESS & INSTRUMENTATION DIAGRAM

SOLUTIA INC.
W.G.KRUMMRICH FACILITY – SAUGET, IL

JOB NO. 12936

SCALE	SIZE	DWG NO.	SHEET	REV
N/A	D	12936RAP	3 OF 3	4

REVISIONS			
REV.	DESCRIPTION	DATE	APPR.
1	UPDATED PER SHED CHANGE ORDER & PER 9/6/11 SUBMITTAL COMMENTS	9/22/11	JAD

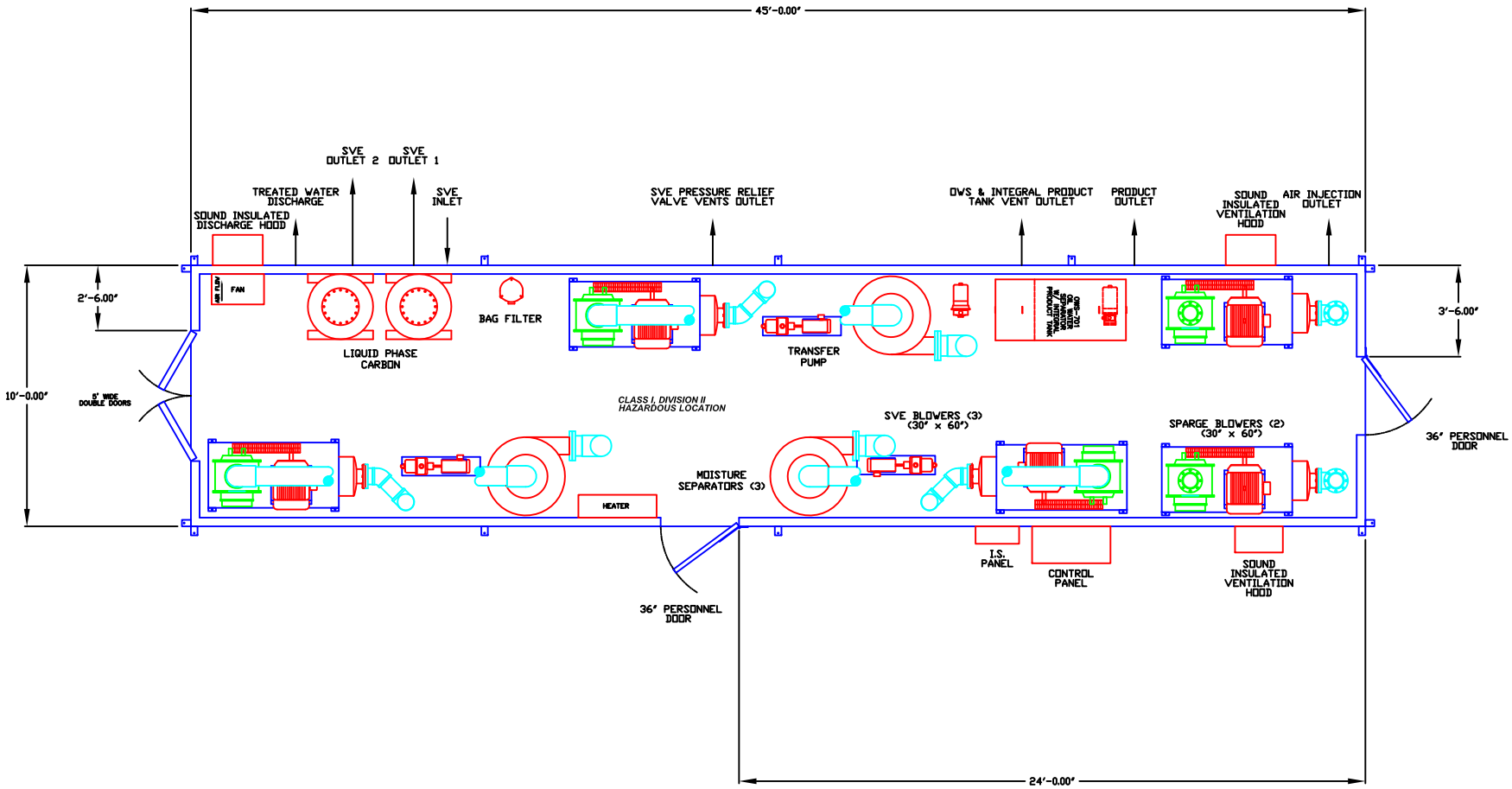

NOTES:

1. INTERIOR WALLS & CEILING COVERED WITH QUILTED SOUND BLANKETS.
2. ALL DOORS TO HAVE HOLD BACK LATCHES TO KEEP DOORS FROM SWINGING SHUT.
3. DO NOT POUR SEAL-OFFS. SEAL-OFFS TO BE COMPLETED ON SITE BY OTHERS AFTER TESTING IS COMPLETED.

CONFIDENTIALITY NOTE:
The information contained in this drawing is intended for use only by BISCO Environmental and Solutia Inc. The information is confidential and any copying, distribution or dissemination without the consent of BISCO Environmental is STRICTLY PROHIBITED.

BISCO Environmental
Soil & Groundwater Remediation Equipment
Taunton, Massachusetts 02780

DRWN BY JAD	DATE 6/24/11	TITLE SVE/AIR INJECTION SYSTEM SHED LAYOUT	
CHK BY	DATE	SOLUTIA INC. W.G. KRUMMRICH FACILITY – SAUGET, IL	JOB NO. 12936
APPR BY	DATE	SCALE 1"=40" / SIZE C / DWG NO. 12936RAL	SHEET 1 OF 1 / REV 1

APPENDIX B

2,000 SCFM Thermal Oxidizer Construction Details

Oxidizer Process Information

- Design Air Flow Capacity: 2000 SCFM
- Minimum Air Flow: 500 SCFM
- Max Gas Pre-Heater Input: 6,000,000 BTUH
(Thermal Mode No Heat Exchanger)
- Max Gas Pre-Heater Input: 3,100,000 BTUH
(Thermal Mode with Heat Exchanger)
- Max Gas Pre-Heater Input: 1,300,000 BTUH
(Catalytic Mode with Heat Exchanger)
- Minimum Thermal Operating Temperature: 1400 degrees F.
- Maximum Thermal Operating Temperature: 1550 degrees F.
- Minimum Catalyst Inlet Temperature: 550 degrees F.
- Average Catalyst Operating Temperature: 650 degrees F.
- Maximum Catalyst Operating Temperature: 1200 degrees F.
- Catalyst Volume: 3 cubic feet
- Catalyst Gas Hourly Space Velocity: 40,000 $GHSV^{-1}$
- Destruction Efficiency:
    - 99% thermal
    - 98% catalytic
- Maximum LEL Throughput: 40% with LEL Sensor
- Time to Reach Operating Temperature: 30 minutes from cold start
- Natural Gas Flow Required: 6000 CFH
- Natural Gas Pressure Required: 5 psig working, 7 psig max
- Supply Voltage: 480/3/60

Equipment Specification

Reactor: The reactor housing will be constructed of 7 gauge rolled steel. The reactor is sized to provide >1 second residence time. The Inlet and outlet connections are flanged. A 2" site glass is provided opposite end of the chamber as the burner for flame viewing. The reactor is mounted on a structural steel base frame suitable for forklift or crane lifting. A stainless steel self supporting stack is provided and will terminate at 20' AGL. The reactor outlet and stack are designed to provide explosion relief in the event of an explosion to limit the damage to the oxidizer and to reduce the risk of personnel injury due to a rapid expansion of gas associated with detonations and explosions within the reactor chamber.

High Temperature Refractory: All internal reactor surfaces are completely insulated with a ceramic module insulation media rated for 2200 deg F. The insulation is 8" x 8 lb density. A coating is applied to the insulation to increase the mechanical integrity and extend the life of the insulation. The insulation will provide <140 deg F cold face temperature in the presence of 5 mph wind.

Gas Pre-Heater: The unit will come equipped as standard with (1) direct gas fired primary air burner with combustion air blower. Burner shall be Maxon model Kinnemax 6", sized for 6MMBTUH with 16:1 turndown. The burner will be fired on ratio utilizing a Maxon micro ratio control valve. Burner will be equipped with Honeywell Nema 4 Self Checking UV scanner and Honeywell Flame Safety Programmer.

Combustion Air Blower: The combustion air blower will be a New York pressure blower model 2206, Arr 4, direct drive, aluminum wheel and will be driven by a constant speed 10 hp TEFC motor operating on 480/3/60. The blower housing will be equipped with a drain, flanged inlet and outlet connections. The inlet will be fitted with a filter silencer.

Fuel Gas Piping Assembly: The fuel gas piping assembly is pre-piped and pre-wired. The gas train will meet all code requirements and is suitable for FM approval. All components are rated for outdoor operation and continuous use. All gas trains are pressure tested and painted safety yellow prior to shipment. Gas train is double block and bleed type. A Roots Model 5M175CTR natural gas flow meter will be shipped loose for field mounting and final connection.

Motor Control Center (MCC): The motor control center will be Nema 4X stainless steel construction and will contain all 480/3/60 control including the VFD for the oxidizer process blower. The MCC will have a lockable power disconnect. A 480/120 transformer will provide the control voltage to the MCP.

Main Control Panel (MCP): The main control panel shall be Nema 4X stainless steel construction and shall be pre-wired to all components. The control panel features all control, alarm detection and an hour meter to record run time via Allen Bradley operator interface terminal. Honeywell Temperature control will be provided with approved temperature control devices. The control panel shall be UL 508A labeled and listed as an assembly. The PLC is Allen Bradley. Burner management is Honeywell. All safety and customer designated interlocks are hardwired.

Flame Arrestor: A flame arrestor will be supplied and mounted to the inlet of the oxidizer and utilized to prevent flame propagation to the source. A spiral crimped aluminum element shall be removable for inspection and cleaning. A thermocouple will be placed on the exit face of the flame arrestor and wired to a temperature indicating controller with alarm set point located in the main control panel. A differential pressure gauge will be installed to measure the pressure drop of the FA element.

Process Blower: The oxidizer process blower is a centrifugal fan manufactured by New York Blower, Model 1910, Arr 8, Teflon shaft seal, stainless steel wheel, pedestal mount 20hp inverter duty motor operating on 480/3/60, which is utilized to overcome the resistance to flow through the oxidizer along with accomplishing the purge mode of the oxidizer. The blower will provide >2" w.c. negative pressure at the inlet of the blower. The blower will generate approx 25 degree F. temperature rise.

Automatic Purge/Dilution Control: A dilution control butterfly valve will be installed on the inlet of the process blower. The valve will be proved open to purge the oxidizer on fresh air prior to initiating light off. Once pre-heat temperature is reached the outlet temperature controller, included in the control cabinet, is wired to automatically modulate the electric actuator and control the dilution air valve when VOC concentrations exceed the temperature set-point.

Inlet Isolation Valve: An inlet isolation valve with proof of position switch will be placed on the inlet of the dilution Tee assembly. Proof of process closed is required prior to initiating the purge sequence.

Flow Measuring Devices: Flow measuring elements will be averaging pitot tube. Transmitters will provide differential pressure locally and corresponding 4-20ma output to the PLC for read outs in CFM on the OIT. Flow rate will be provided for the inlet feed process, & stack flow.

Temperature Measurement: Temperature measurement will be provided via RTD and thermocouple. Indicating temperatures will be provided for the heat exchanger T1, T2, T3 and T4. All temperatures will be viewable form the MCP.

Temperature Chart Recorder: The chart recorder is digital ABB and shall record the combustion chamber temperature. Once the catalyst module is inserted the catalyst outlet temperature is displayed. The temperature recorder is mounted in the MCP. The chart recorder as an SD card suitable for removal and downloading data to a PC.

Heat Exchange Module: The oxidizer can be furnished with an externally mounted nominal 50-60% thermally efficient tube and shell heat exchanger. The heat exchanger can be utilized in either thermal or catalytic mode. The heat exchange flow pattern is counter cross flow. The heat exchanger is fabricated from 309 stainless steel with an internal expansion joint and internal insulation with a 304 stainless steel case and flanges. Inspection ports are available to inspect both sides of the tube to header sides of the heat exchanger.

Heat Exchange By-Pass Module: The heat exchange by-pass allows the air flow to by-pass the cold and hot side of the heat exchanger and vent directly to the exhaust stack. This will enable higher VOC through put.

LEL Alarm Sensor: The LEL alarm sensor will be duct mount, which permits operation of the system at >25% LEL. The LEL alarm will shut down the oxidizer in the event 40% LEL is reached. The alarm sensor will be factory calibrated to benzene.

Catalyst Module: The oxidizer can be furnished with a monolith catalyst, specifically designed for the destruction of petroleum hydrocarbons. The catalyst module is easily field inserted with minimal requirements. The catalyst module will be crated and shipped loose for storage and future use.

N-11-1198 Master Purchased Components Bill of Material

Solutia – Sauget IL

P&ID	Qty	P/N	Title	Detail	Cut Sheet
	1		BURNER		
Burner	1	KINEMAX 6" G	MAXON KINEMAX, 6" SERIES G	NATURAL GAS, 6,000,000 BTUH	Maxon Kinemax
IT-1	1	AO6SA6X	TRANSFORMER, IGNITION	120/6000V, #12178 EPOXY FILLED	Dongan A06SA6X
S/G	1	120054	PEEPSIGHT, 2/3 PIPE UNION, 2" NPT	ECLIPSE	N/A
IT-1	2	I1-02-2046	BOOT, PROTECTOR	#02-2046	N/A
IT-1	1	I1-SSN	TERMINAL, SPRING SNAP	#021958	N/A
IT-1	1	I1-RSN	TERMINAL, RING	HIGH VOLTAGE	N/A
IT-1	10	I1-734803	WIRE, IGNITION	STANDARD BLACK	N/A
	1		HEAT EXHANGER		
HX-1	1	CUSTOM HX	TUBE & SHELL 2000 CFM	NOMINAL 50-60% efficient, 309 ss internals, internally insulated, 304 ss casing	N/A
Damp-1&2	2	FNW731B12	BUTTERFLY VALVE, 12" WAFER	CI BODY, SS. DISC	FNW 731 Butterfly Valve
	1	SB10A10A12000140	FLEX HOSE SS. 150# FLANGES	12" DIA., 14" OAL	N/A
	1		FAN/FAN ASSEMBLY		
M1	1	NYB-1910-20HP -	BLOWER, PRESSURE, NYB SIZE 1910, AL WHEEL, ARR 8	20 HP, 3600 RPM, TE, 254T 3-60-230/460 V	NYB PB IM, NYB PB
M2	1	NYB-2206-10HP	BLOWER, PRESSURE, NYB SIZE 2206, AL WHEEL, ARR 4	10 HP, 3500 RPM, TE, 215T, 3-60-230/460V	NYB PB IM, NYB PB
Dilution Filter	1	F72-8	FILTER, AIR INTAKE & FILTER SILENCER, 8"	8" FLANGE CONNECTION, FOAM ELEMENT	Stoddard F72 Series
M2 Filter	1	F72-6	FILTER, AIR INTAKE & FILTER SILENCER, 10"	6" FLANGE CONNECTION, FOAM ELEMENT	Stoddard F72 Series
PDI-1 PDI-2	2	A40-108	FILTER SERVICE INDICATOR	STODDARD	NA
M6 valve	1	8BWM-1153-N	VALVE, BUTTERFLY, 8", ANGLE SEAT	VALV-TECH, BARE STEM	Valv-tech BL-BW

M5 Valve	1	10BWM-1153-N	VALVE, BUTTERFLY, 10”, ANGLE SEAT	VALV-TECH, BARE STEM, W/KEYWAY	Valv-tech BL-BW
	1		FUEL TRAIN		
PI-2	1	J7840P	GAUGE, LOW PRESSURE DIAPHRAGM, 0-15 PSIG	2.5 FACE, 1/4" LOWER MOUNT, LIQUID FILLED	Marsh Severe Service Gauge
PI-3	1	G22704	GAUGE, LOW PRESSURE DIAPHRAGM, 0-30" WC	2.5 FACE, 1/4" LOWER MOUNT, FLUTTER GUARD	Ashcroft Pressure Gauge 1490
Main Gas	2	701-1065	VALVE, BALL, 2” NPT	JOMAR FULL PORT BRASS	Jomar T-100
Pilot Gas	2	701-1040	VALVE, BALL, ½” NPT	JOMAR FULL PORT BRASS	Jomar T-100
Primary & Sec	2	D230475	PRESSURE REGULATORS, FRI 712/6	KARL DUNGS	Dungs Pressure Reg FRI-6
S1-S2	1	230-793 VP	DMV-D 703/622 DUAL MODULAR VALVE w/VENT VALVE ADAPT, 1-2" BODY SIZE, 120VAC	7 PSI, FAST OPEN/CLOSE, ADJ MAX FLOW, PROOF OF CLOSURE ON VALVE 2	Dungs DMVD Multivalve
S1-S2	2	D225047	ADAPTER ACCESSORIES, 1/4" NPT	FOR DMV & FRI - KDI FUEL TRAINS	N/A
ZI-2	1	46000-6	VISUAL INDICATOR FOR DMV	DUNGS FUEL TRAIN VALVE ASSEMBLY	N/A
PSH-1	1	46015-8	SWITCH, HIGH GAS PRESSURE, 40-200" WC, DIAL ADJ, MANUAL RESET	1/4" NPT PIPE MOUNT, NEMA4, UL/CSA/FM, GMH-A4-4-8, DUNGS FUEL TRAIN VALVE ASSY	Dungs Pressure Switch GAO, GMH
PSL-1	1	46016-8	SWITCH, LOW GAS PRESSURE, 40-200" WC, MANUAL RESET	1/4" NPT PIPE MOUNT, NEMA4, UL/CSA/FM, GML-A4-4-8 , DUNGS FUEL TRAIN VALVE ASSY	Dungs Pressure Switch GAO, GMH

S1-S2	1	D214975	ADAPTOR, FOR SIDE MT HIGH GAS SW ON DMV	DUNGS FUEL TRAIN VALVE ASSY, GAO, GML GMH A2	N/A
S1-S2	2	D219008	TEST NIPPLE	ACCESSORIES, G 1/8 FOR DMV	N/A
Primary Sec	2	D2221997	FLANGE 2" NPT, DMV 703	DUNGS FUEL TRAIN VALVE ASSY	N/A
S1-S2	1	D229846	SPRING #5, RED, 10 TO 22" WC	FOR FRI 710 & 712 PRESSURE REGULATORS	N/A
S1-S2	1	D229847	SPRING #6, YELLOW, 12-28” W.C.	FOR FRI 710 & 712 PRESSURE REGULATORS	N/A
S1-S2	1	D229849	SPRING #8, PINK, 40-60” W.C.	FOR FRI 710 & 712 PRESSURE REGULATORS	N/A
M3	1	100099	KIT, ACTUATOR MOUNTING, 0.5-4", V2	FOR ECLIPSE/DUNGS FUEL SYSTEMS	N/A
S3-S4	2	8214G20	VALVE, SOLENOID, ASCO, 1/2"	NORMALLY CLOSED, 120V, W/18" NPT TAPS	Asco Series 8214 V6676R5
S5	1	8214G023	VALVE SOLENOID, ASCO, ½” NPT, GAS VENT	ALUM BODY, NORMALLY OPEN, 120 VAC	ASCO 8214 V6675R3
S6	1	8214G054	VALVE SOLENOID, ASCO, 1” NPT, GAS VENT	ALUM BODY, NORMALLY OPEN, 120 VAC	ASCO 8124 V7466R2 & Sec (2)
Pilot - Primary	1	M1-325-3-1/2	REGULATOR, 1/2", NO LIMITER	PILOT GAS PRESSURE	Maxitrol MI2010, MS2055
Pilot - Primary	1	211-1125	SPRING, RED, 10-22” W.C.	FOR M1-325 PILOT REGULATOR	N/A
Main Gas	1	011-2035K	Y-STRAINER 2" NPT	100 MESH SS SCREEN	Mueller CI y-Strainer

Pilot	1	VA-3018	GAS COCK, 1/2", ADJUSTABLE		N/A
FI-3	1	5M175CTR	METER, ROOTS GAS, MECHANICAL TOTALIZER	FLANGED CONNECTION	Roots Meter B3_5M175
	Qty	P/N	Title	Detail	Cut Sheet
	1	N-07-0531-009	CONTROLS		
M3-M6 ZSL-3 ZSH-6	2	M7284C-1000	ACTUATOR, HONEYWELL 120V, 4-20 mA INPUT W/AUX SWITCH	MODUTROL SERIES 72, 150 IN/LB ADJ STROKE	HW Series 72 Mod Motors
M6	1	Y20DAA-KIT-2	LINKAGE ASSEMBLY, VALLEY	FOR HONEYWELL DILUTION VALVE ACTUATOR	N/A
UV	1	C7061A1012	SCANNER, UV FLAME DETECTOR, SELF-CHECKING	HONEYWELL PURPLE PEEPER	HW C7061AUV Scanner
PDSH-2	1	46020-5	SWITCH, AIR PRESSURE, 2-20" WC	1/4" NPT, NEMA4, DIAL ADJ, UL/CSA/FM, AA-A2-6-5, DUNGS	Dungs Air Pressure AA A2
PDSL-1 PDSL-2	2	46020-3	SWITCH AIR PRESSURE, .4-4" WC	1/4" NPT, AA-A2-6-3, DUNGS	Dungs Air Pressure AA A2
			CATALYST		
Cat	2	204803	CATALYST, 22-1/4"x 23-1/4", 3.5" DEPTH, 400CPSI	WHOLE BLOCK, NANO HYPERCAT ACP	N/A
Cat	2	204804	CATALYST, 11.13"x 23-1/4", 3.5" DEPTH, 400CPSI	HALF BLOCK, NANO, HYPERCAT ACP	N/A
Cat	2	TEST COUPON	TEST CORE, VOC, 200 CPSI	ATTACHED TO CATALYST	NA
			FLAME ARRESTOR		
Flame Arrestor	1	80019959	ARRESTOR, FLAME ELEMENT BANK 8"	GROTH, 6061 SCH 805 AL PIPE, 16" DIA	Groth FA 7618-7628

			INSTRUMENTATION		
TE-1,A,B TE-2,A,B	2	KKK48U-027-00-8HN34	THERMOCOUPLE, TRIPLE	TYPE K, 27", PYROMATION	Pyromation Brochure & Tech
TE-3,TE-4 & TE-5	3	KKK48U-0??-00-8HN34	THERMOCOUPLE	TYPE K, ??", PYROMATION	Pyromation Brochure & Tech
FE-2	1	VF-2-BV	FLOWMETER, VISI-FLOAT 0.2-2 SCFH	DWYER	Dwyer Visifloat Series VF
FE-1	1	DS300-10-LV	FLOW SENSOR, 10”, LESS VALVES	DWYER	Dwyer Flow Sensor DS-300
FIT-1	1	IDP10-A22A01F-M1L1 0-3"WC	TRANSMITTER, DIFF. PRESS, FOXBORO, IDP10 4-20 mA OUTPUT, 316SS	CALBRATED 0-2” W.C., FM EXP CLASS I, DIV 1, GROUPS B, C, & D.	Foxboro IDP10 Data, O&M
FE-3		23L0300B-XX-XX-04	PITOT TUBE, SELF AVERAGING, 1” DIA. SS.	23L MIRIAM ACCUTUBE	Miriam Accutube
FIT-3	1	IDP10-A22A01F-M1L1 0-1"WC	TRANSMITTER, DIFF. PRESS, FOXBORO, IDP10 4-20 mA OUTPUT, 316SS	CALBRATED 0-1” W.C., FM EXP CLASS I, DIV 1, GROUPS B, C, & D.	Foxboro IDP10 Data, O&M
PDI-3	1	MAG 2010	GAUGE, MAGNEHELIC 0-10”WC	DWYER	Dwyer Mag Gauge 2000 Ser
AIT-1 AE-1	1	ULTIMA X-E39E1D33000000C	LEL MONITOR, IR, W/LCD DISPLAY	316 SS ENCLOSURE	Ultima X Series O&M, IR LEL

INTELLISHARE ENVIRONMENTAL
CLEAN AIR SOLUTIONS

CAUSE & EFFECT MATRIX

UNIT/EQUIPMENT NO.

Big Mo 2000 CFM Thermox, IE #N-11-1198

Rev	Date	Description	By	Check	Lead	Project
0	9/6/2011	Initial Draft	GW			

MOC DOCUMENTS	DRAWING	REV.
SOA/CSD/SRS		
LOGIC		
PID		

	TAG NO.	TYPE	SAFE STATE	OUTPUT	EFFECT	NOTES
1	S-1	DO	FC	Main Gas Shut Off Valve	Close	
2	S-2	DO	FC	Main Gas Blocking Valve	Close	
3	M-3	DO	FC	Gas Control Valve (Micro Ratio Valv	Close	
4	S-3	DO	FC	Pilot Main Shut Off Valve	Close	
5	S-4	DO	FC	Pilot Blocking Valve	Close	
6	IT-1	DO	Off	Ignitor	Off	
7	M-6	DO	FO	Air Dilution Valve	Open	
8	M-5	DO	FC	Process Gas Isolation Valve	Close	
9	N/A	DO	Off	SVE Blower	Off	
10	M-2	DO	Off	Combustion Air Blower	Off	
11	M-4	DO	Off	Heat Exchanger sparge Blower	Off	
12	M-7	DO	Off	Heat Exch Air Sparge Blower Valve	Close	

	PROCESS DEVIATION	TYPE	PLC REF	TAG NO.	TD	TRIP SETPOINT	OPERAING RANGE/LIMIT	Notes		1	2	3	4	5	6	7	8	9	10	11	12	Comment
1	E-Stop	DI	I:0/0	E-Stop	0	-	-			X	X	X	X	X	X	X	X	X	X	X	X	
2	Low Gas Pressure	DI	I:0/1	PSL-1	0	40" W.C.	0-60" W.C.	2		X	X	X	X	X	X	X	X	X	X	X	X	
3	High Gas Pressure	DI	I:0/2	PSH-1	0	20" W.C.	0-60" W.C.	2		X	X	X	X	X	X	X	X	X	X	X	X	
4	High L.E.L.	DI	I:0/3	ASH-1	0	40%	0-100% L.E.L.			X	X	X	X	X	X	X	X	X	X	X	X	
5	High Inlet Temp	DI	I:0/4	TAH-1	0	900/1600 Deg F				X	X	X	X	X	X	X	X	X	X	X	X	
6	High Oultet Temp	DI	I:0/5	TAH-2B	0	1022/1650 Deg F	-			X	X	X	X	X	X	X	X	X	X	X	X	
7	System Blower Motor Off	DI	I:0/6	M-1	0	N/A	-	1		X	X	X	X	X	X	X	X	X	X	X	X	Motor overload has tripped
8	System Air not Proven	DI	I:0/7	PDSL-1	0	0.4 " W.C.	0.4-4" W.C.	1		X	X	X	X	X	X	X	X	X	X	X	X	
9	Combustion Blower Motor Off	DI	I:0/8	M-2	0			1		X	X	X	X	X	X	X	X	X	X	X	X	Motor overload has tripped
10	Combustion Air not Proven	DI	I:0/9	PDSL-2	0	0.4 " W.C.	0.4-4" W.C.	1		X	X	X	X	X	X	X	X	X	X	X	X	
11	Catalyst High DF Pressure	DI	I:0/10	PDSH-2	0	5" W.C.	2-20" W.C.	1		X	X	X	X	X	X	X	X	X	X	X	X	
12	Burner Gas Valve not Closed	DI	I:0/11	ZSL-3	0			1														System pre-start only
13	Dungs Valves not Closed (gas safety shut off valves)	DI	1:0/12	ZSL-2	0																	System pre-start only
14	Flame Failure	DI	I:0/13	FSP-1	0					X	X	X	X	X	X	X	X	X	X	X	X	
15	System Ready Temp not Reached or Failed to Maintain	DI	I:0/15	TAL-2	60 min	650/1450 Deg F.				X	X	X	X	X	X	X	X	X	X	X	X	
16	Dilution Valve not Open	DI	I:0/16	ZSH-6	0																	System pre-start only
17	System Blower VFD Fault	DI	I:0/17	SCA-1	0		-			X	X	X	X	X	X	X	X	X	X	X	X	
18	SVE/AS System Off	DI	I:0/18		0		-			X	X	X	X	X	X	X	X	X	X	X	X	
19	System Inlet Valve not Closed	DI	I:0/19	ZSL-5	0																	System pre-start only
20	System Blower not in Auto	DI	I:1/1	HOA-1	0																	System pre-start only
21	Combustion Blower not in Auto	DI	I:1/3	HOA-2	0																	System pre-start only
22	Flame Arrestor High Outlet Temp	AI	I:3.2	TAH-5	0					X	X	X	X	X	X	X	X	X	X	X	X	

DI - DIGITAL INPUT
DO - DIGITAL OUTPUT
FO - FAILED OPEN
FC - FAILED CLOSED

1) 15 seconds allowed for start-up, 0 second delay once unit is running
2) On hold.. To be based on flame/pressure operating limits
3) Setpoint depends on Catalytic or Thermal Operation

MCC PANEL WIRING

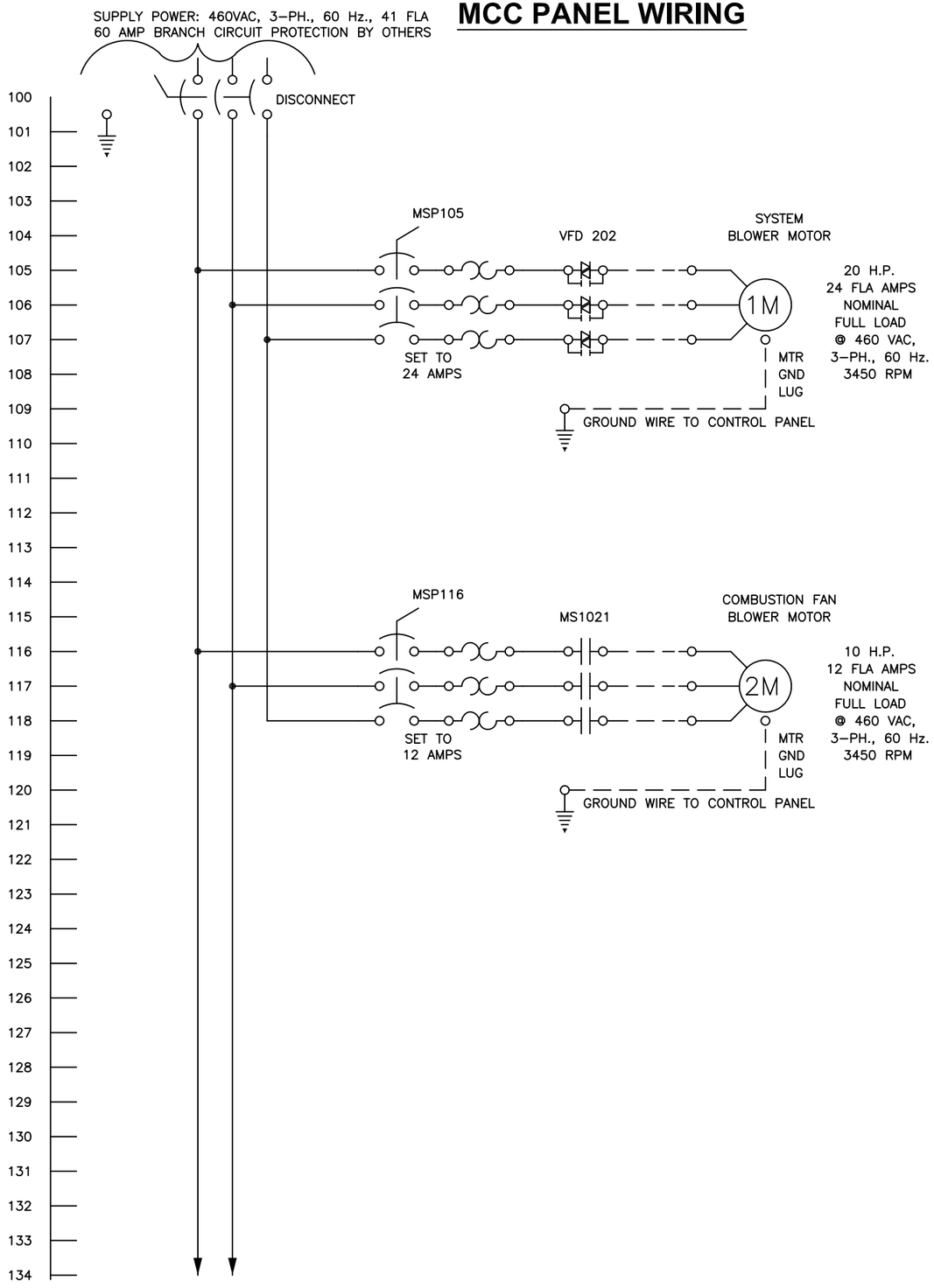

MCC PANEL WIRING

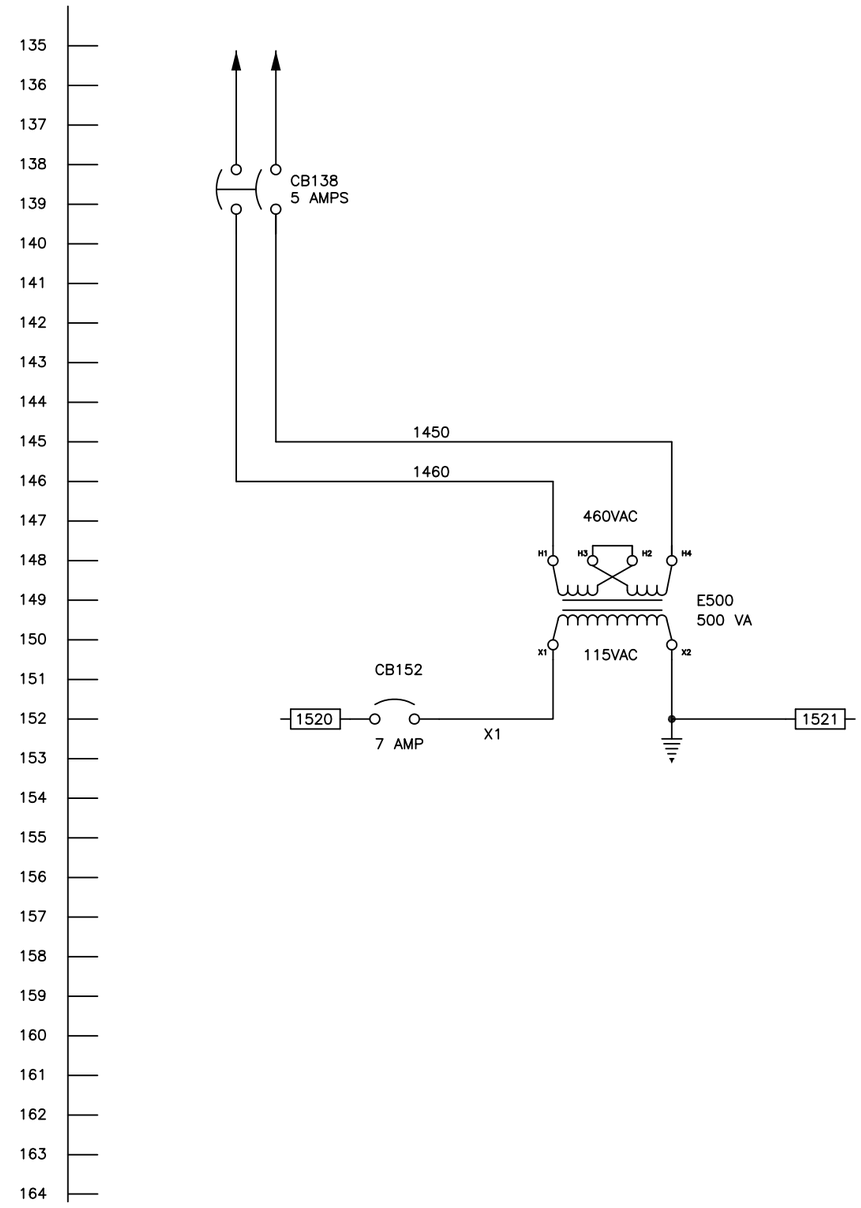

REV	BY	DATE	CHANGE
1	BPH	9/2/11	Submittal

INTELLISHARE ENVIRONMENTAL
CLEAN AIR SOLUTIONS

PROJECT ID

TITLE
ELECTRICAL SCHEMATIC
T02000

DRAWING NO. N-11-1198-401

SCALE NONE

DRAWN EAM DATE 8/7/11

CHECKED DATE

APPROVED DATE

LAST DRAWN BY EAM DATE 8/7/11

CUSTOMER
Solutia
W.G. Krummerich Facility
Sauget, IL

KF NUMBER 11291

PAGE 1 OF 1

LAST PLOTTED BY EAM DATE 8/7/11

MCC PANEL WIRING

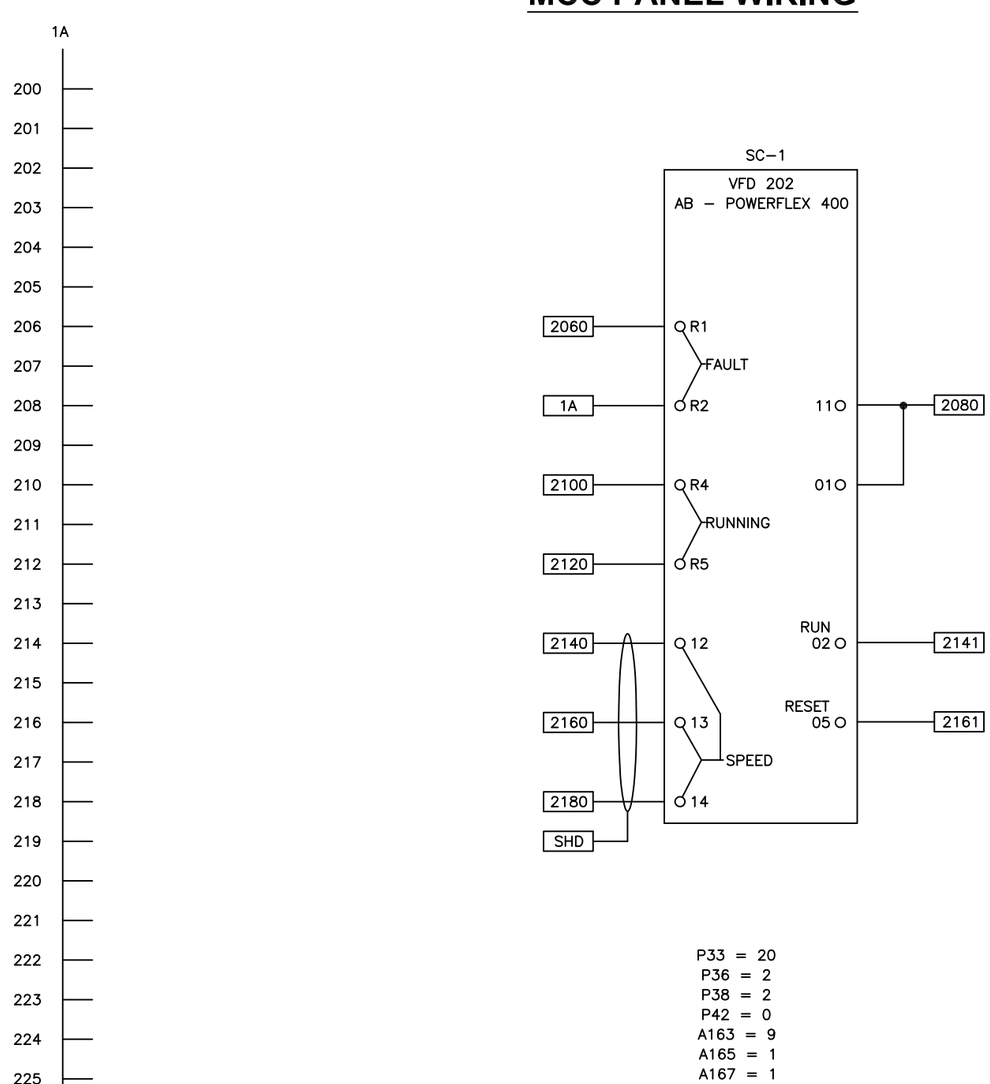

MCC PANEL WIRING

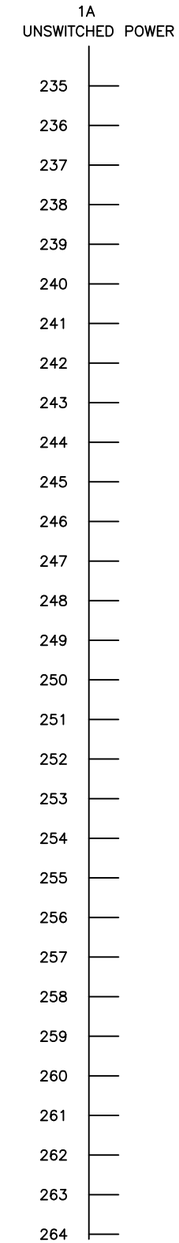

REV	BY	DATE	CHANGE
1	BPH	9/2/11	Submittal

INTELLISHARE ENVIRONMENTAL
CLEAN AIR SOLUTIONS

PROJECT ID

TITLE
ELECTRICAL SCHEMATIC
T02000

DRAWING NO. N–11–1198 –402

SCALE NONE

DRAWN EAM DATE 8/7/11
CHECKED DATE
APPROVED DATE
LAST DRAWN BY EAM DATE 8/7/11

CUSTOMER
Solutia
W.G. Krummerich Facility
Sauget, IL

KF NUMBER 11291
PAGE 1 OF 1

LAST PLOTTED BY EAM DATE 8/7/11

MCP PANEL WIRING

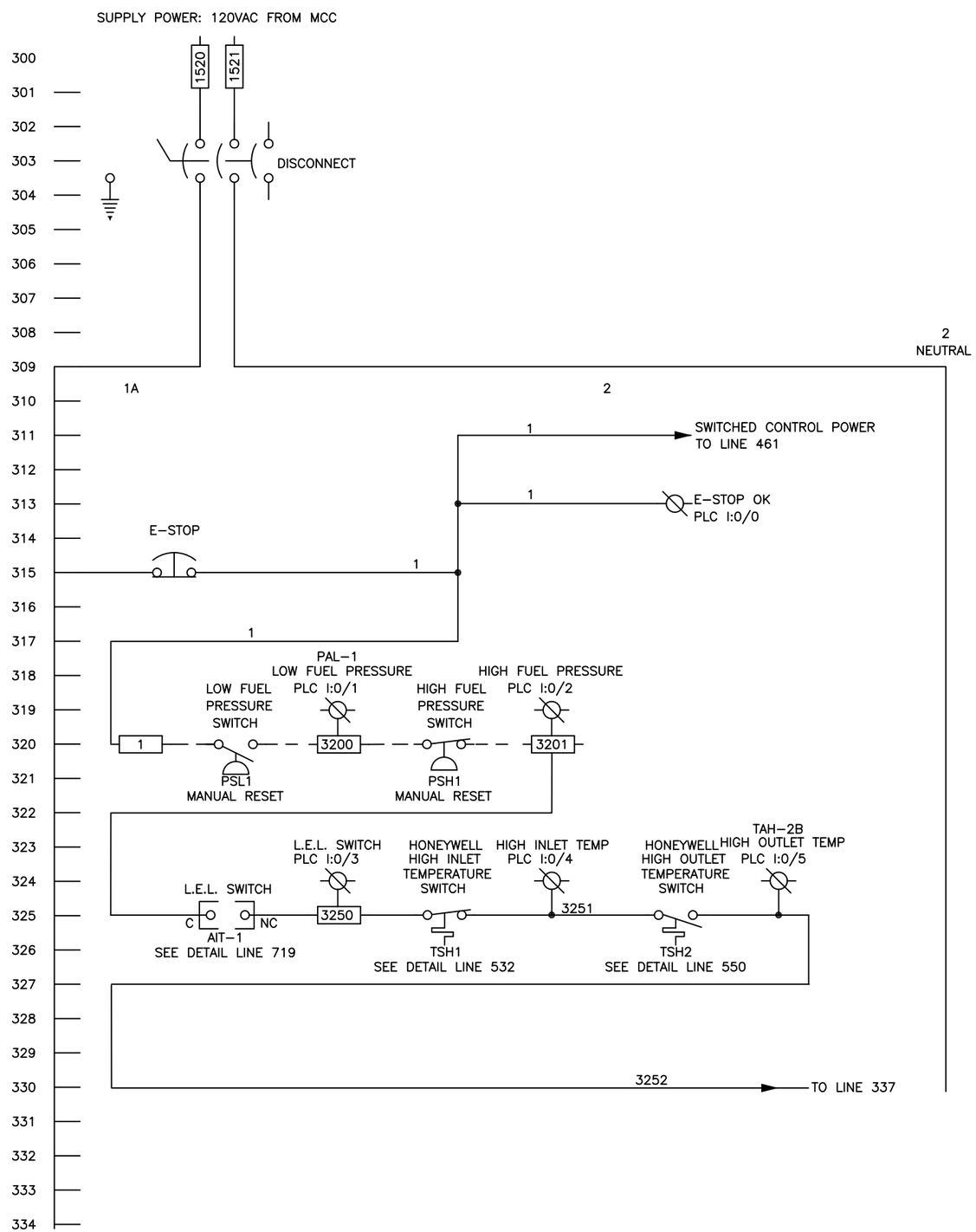

MCP PANEL WIRING

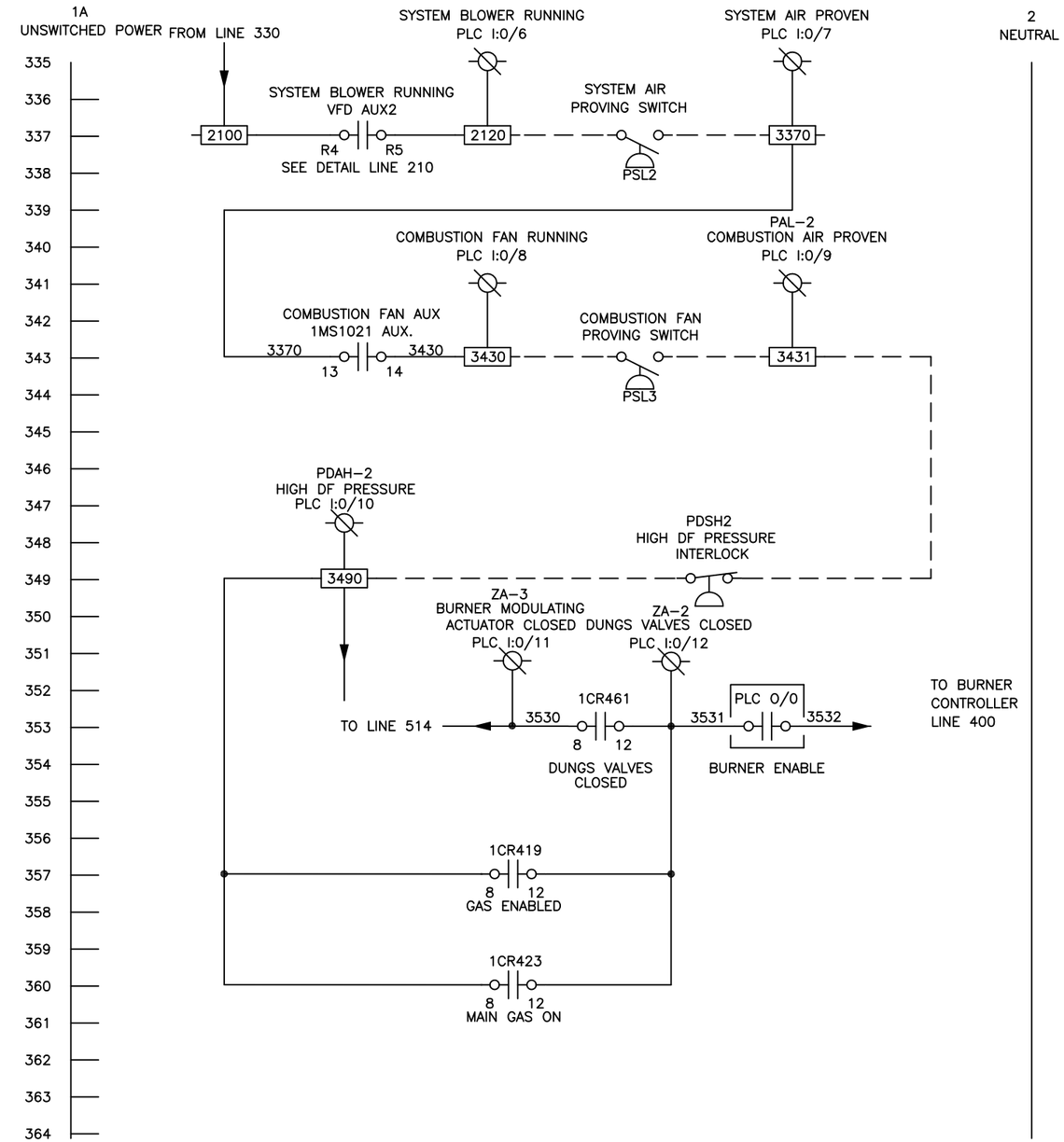

REV	BY	DATE	CHANGE
1	BPH	9/2/11	Submittal

INTELLISHARE ENVIRONMENTAL
CLEAN AIR SOLUTIONS

PROJECT ID

TITLE
ELECTRICAL SCHEMATIC
T02000

DRAWING NO. N-11-1198-403

SCALE NONE

DRAWN EAM DATE 8/7/11

CHECKED DATE

APPROVED DATE

LAST DRAWN BY EAM DATE 8/7/11

CUSTOMER
Solutia
W.G. Krummerich Facility
Sauget, IL

KF NUMBER 11291

PAGE 1 OF 1

LAST PLOTTED BY EAM DATE 8/7/11

MCP PANEL WIRING

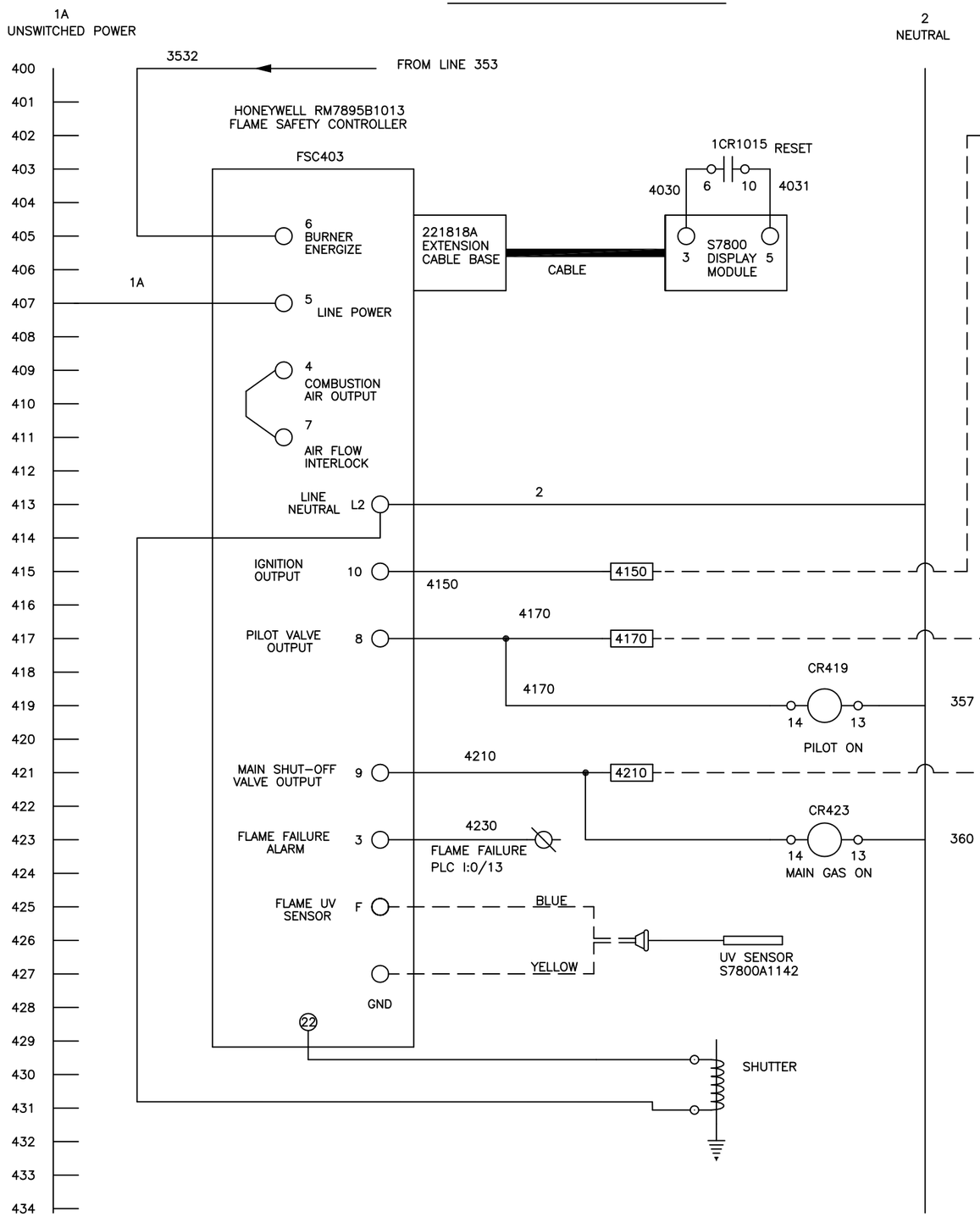

MCP PANEL WIRING

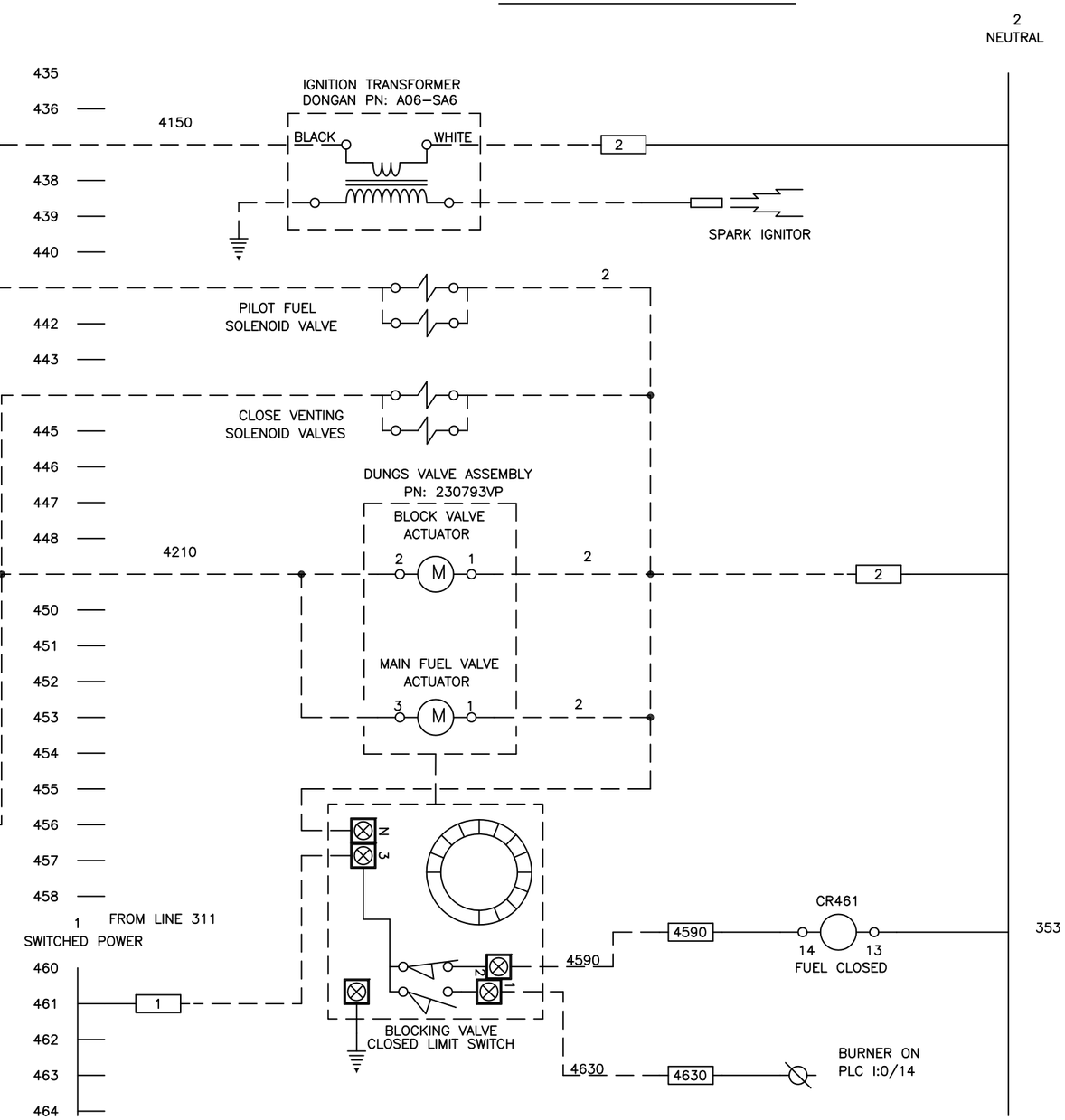

REV	BY	DATE	CHANGE
1	BPH	9/2/11	Submittal

INTELLISHARE ENVIRONMENTAL
CLEAN AIR SOLUTIONS

PROJECT ID

TITLE
ELECTRICAL SCHEMATIC
T02000

DRAWING NO.
N-11-1198-404

SCALE
NONE

DRAWN EAM DATE 8/7/11
CHECKED DATE
APPROVED DATE
LAST DRAWN BY EAM DATE 8/7/11

CUSTOMER
Solutia
W.G. Krummerich Facility
Sauget, IL

KF NUMBER 11291
PAGE 1 OF 1

LAST PLOTTED BY EAM DATE 8/7/11

MCP PANEL WIRING

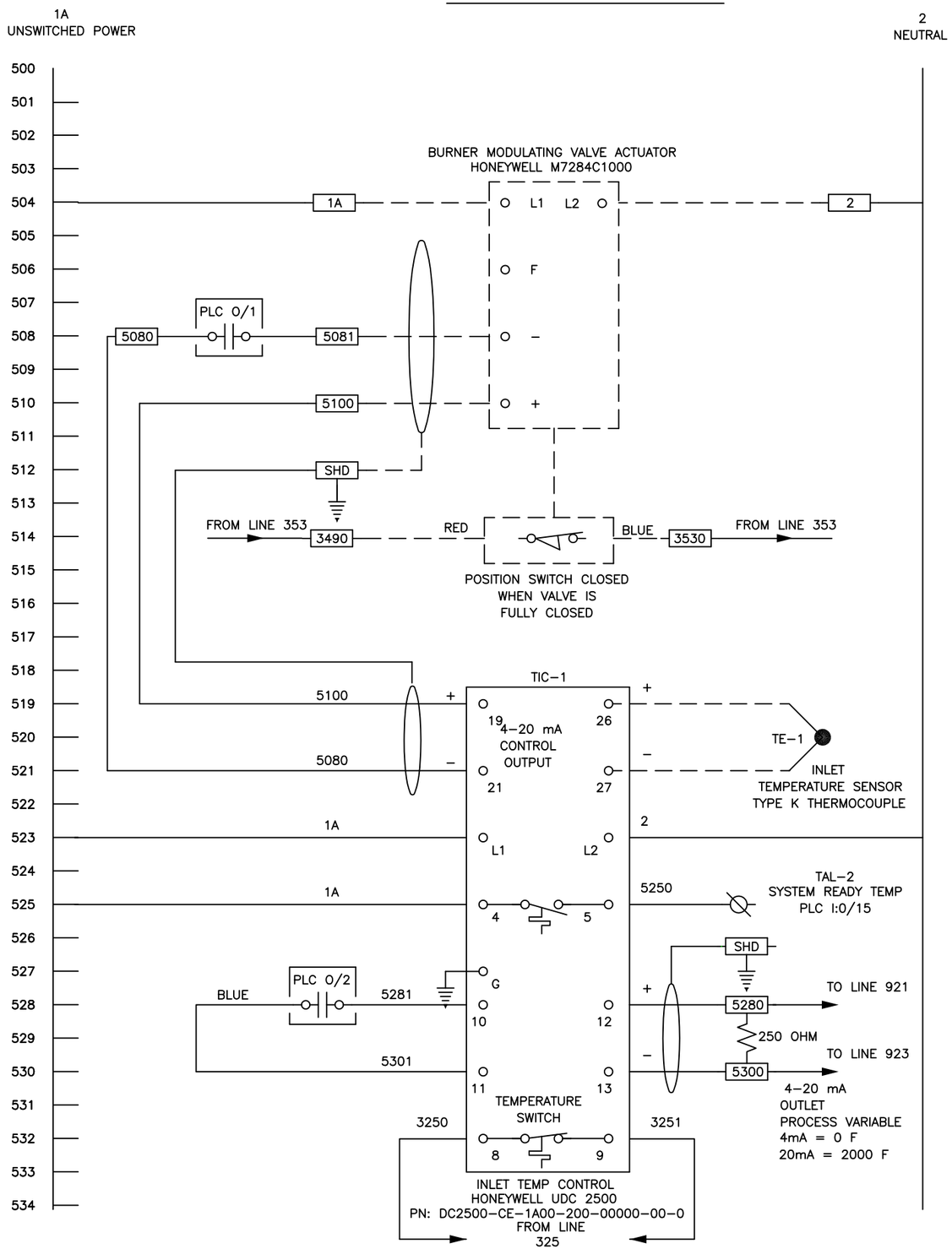

MCP PANEL WIRING

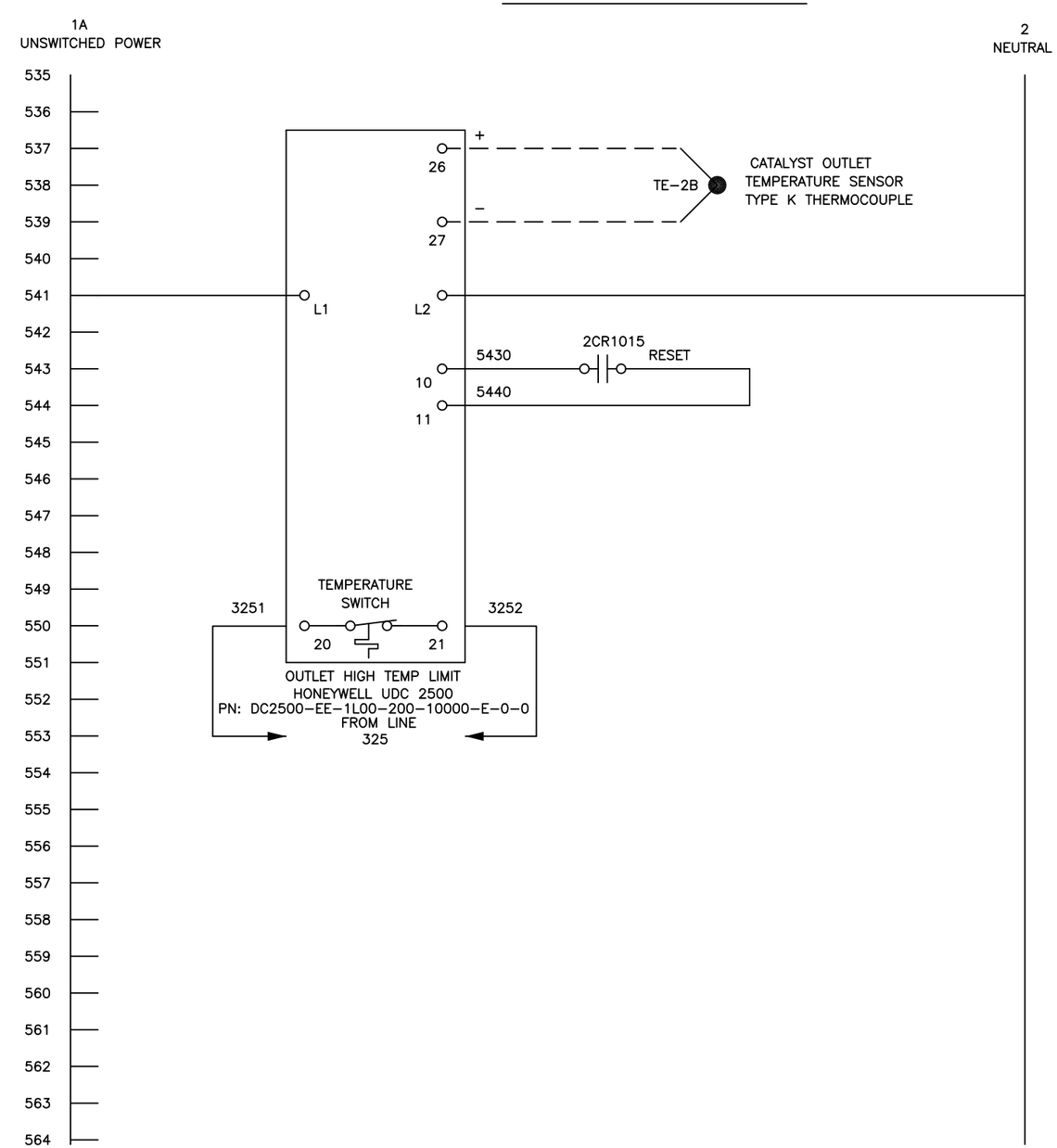

REV	BY	DATE	CHANGE
1	BPH	9/2/11	Submittal

INTELLISHARE ENVIRONMENTAL
CLEAN AIR SOLUTIONS

PROJECT ID

TITLE
ELECTRICAL SCHEMATIC
T02000

DRAWING NO. N–11–1198 –405

SCALE NONE

DRAWN EAM DATE 8/7/11
CHECKED DATE
APPROVED DATE
LAST DRAWN BY EAM DATE 8/7/11

CUSTOMER
Solutia
W.G. Krummerich Facility
Sauget, IL

KF NUMBER 11291

PAGE 1 OF 1

LAST PLOTTED BY EAM DATE 8/7/11

MCP PANEL WIRING

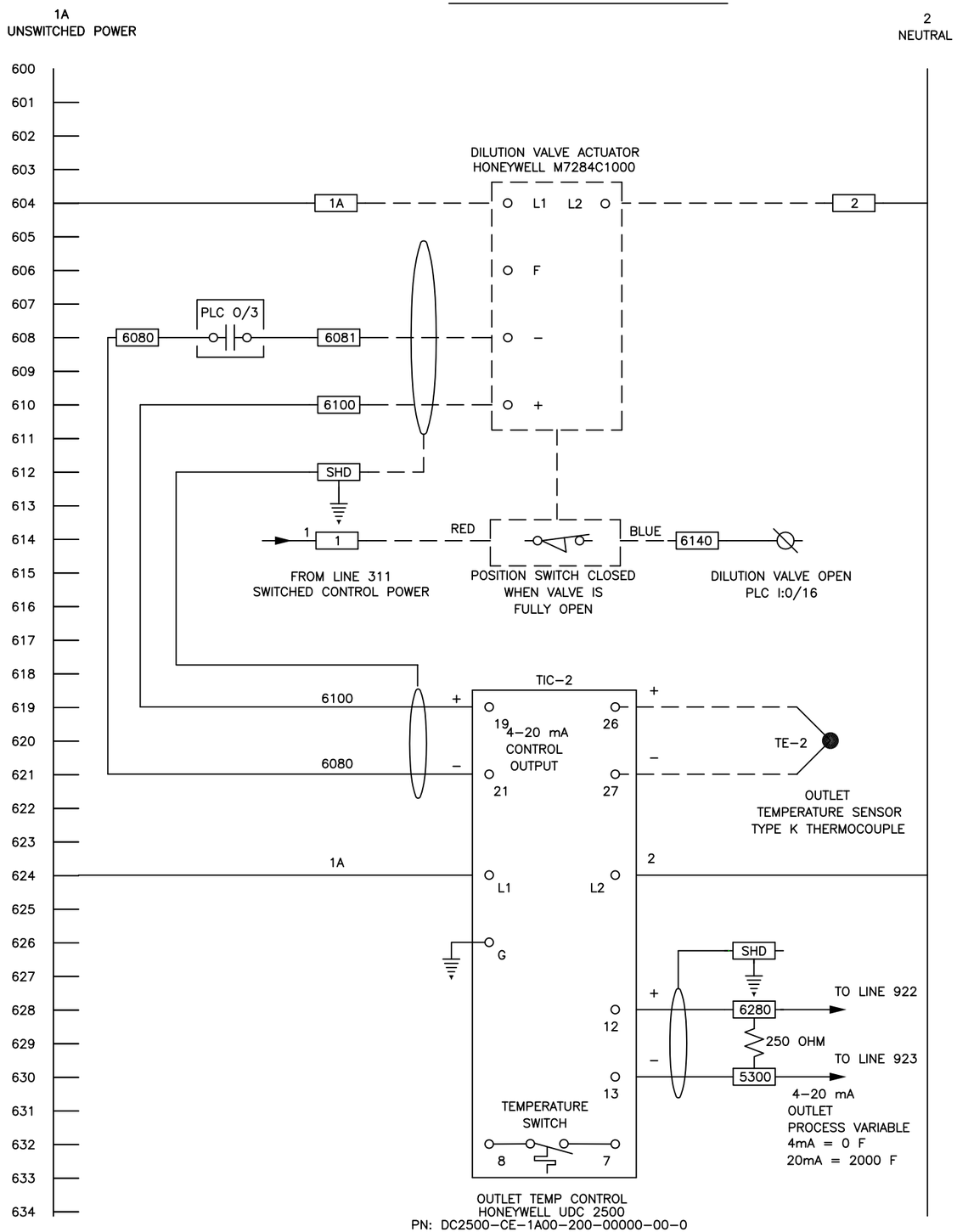

MCP PANEL WIRING

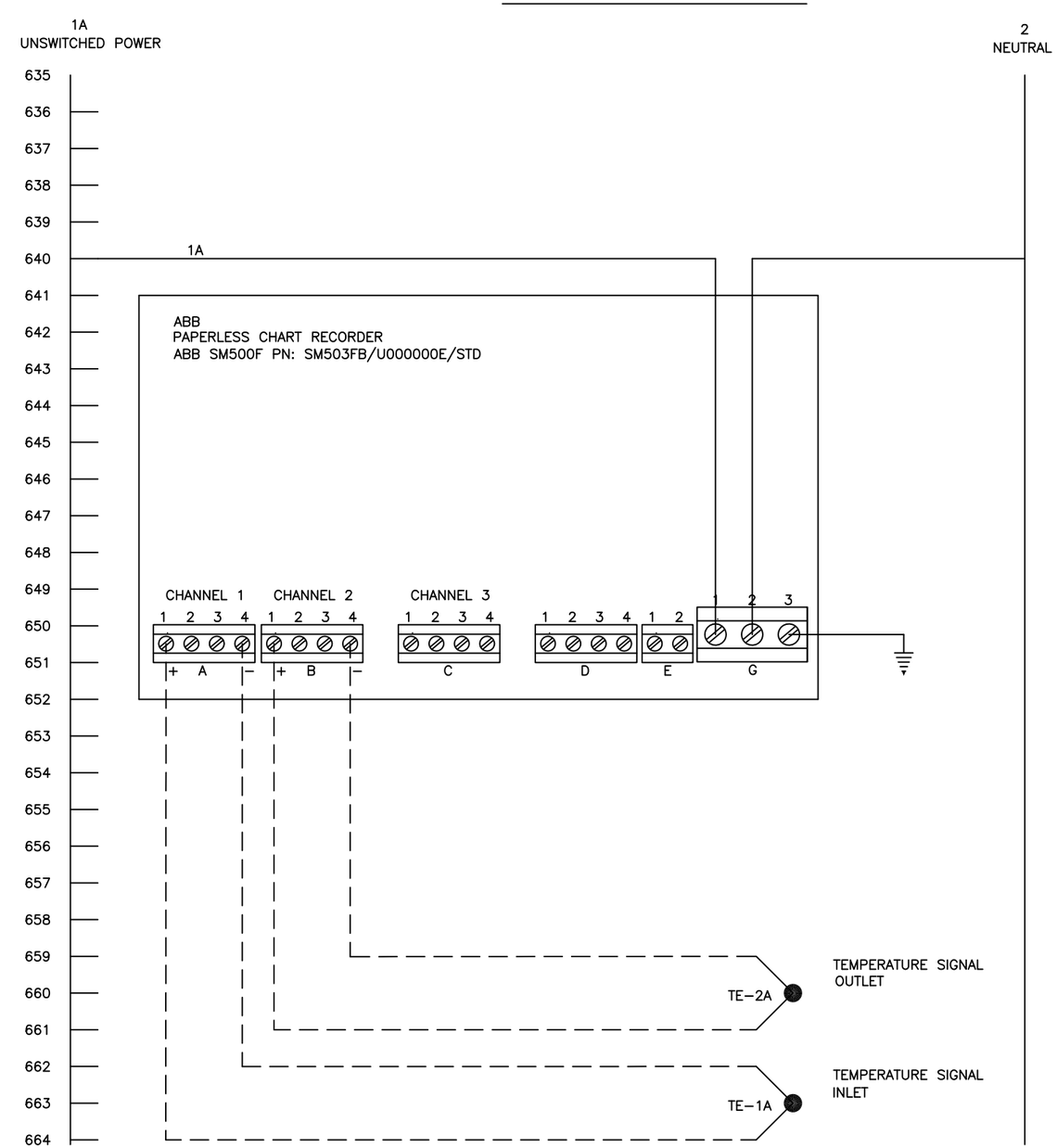

REV	BY	DATE	CHANGE
1	BPH	9/2/11	Submittal

INTELLISHARE ENVIRONMENTAL
CLEAN AIR SOLUTIONS

PROJECT ID

TITLE
ELECTRICAL SCHEMATIC
T02000

DRAWING NO. N–11–1198 –406

SCALE NONE

DRAWN EAM DATE 8/7/11

CHECKED DATE

APPROVED DATE

LAST DRAWN BY EAM DATE 8/7/11

CUSTOMER
Solutia
W.G. Krummerich Facility
Sauget, IL

KF NUMBER 11291

PAGE 1 OF 1

LAST PLOTTED BY EAM DATE 8/7/11

MCP PANEL WIRING

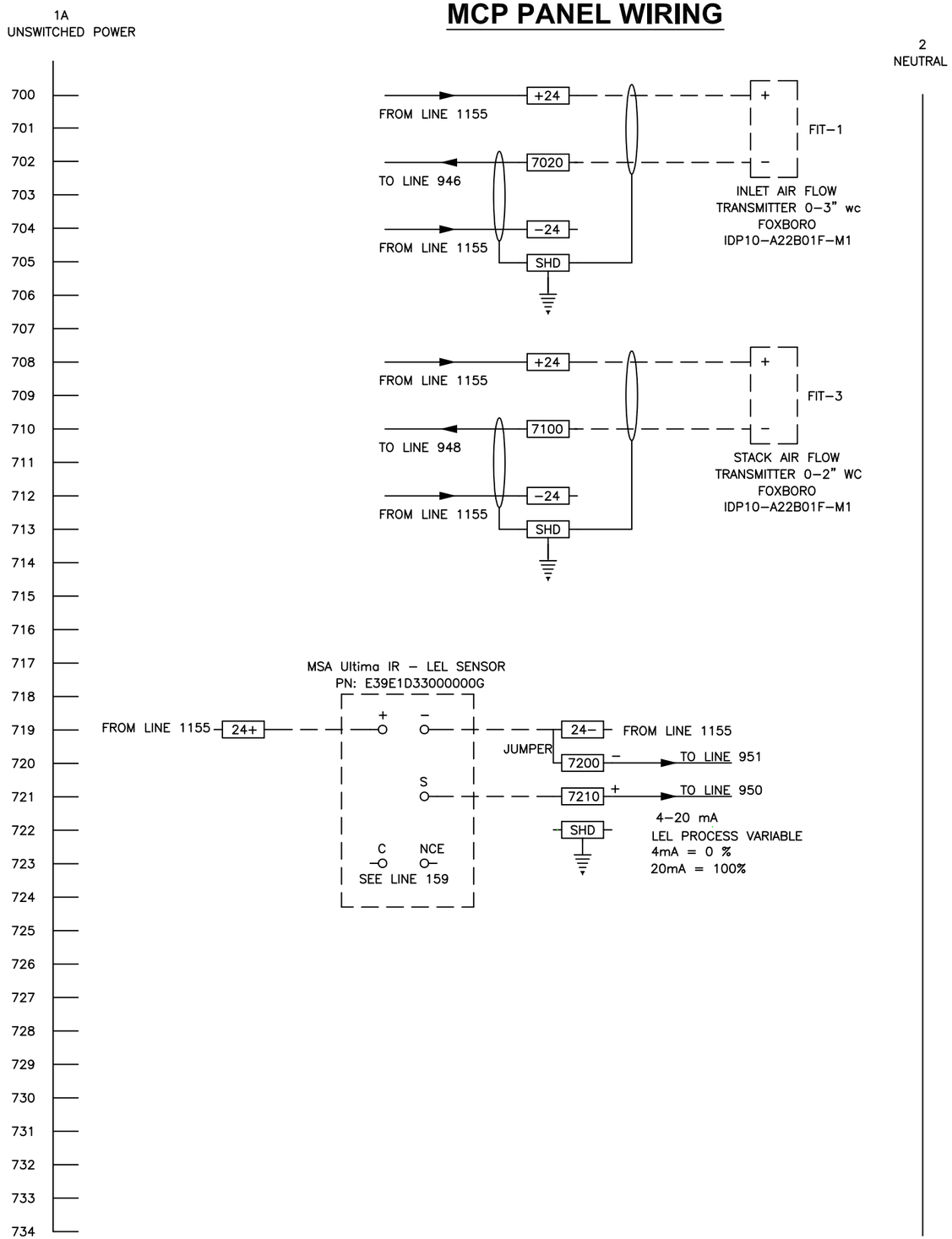

MCP PANEL WIRING

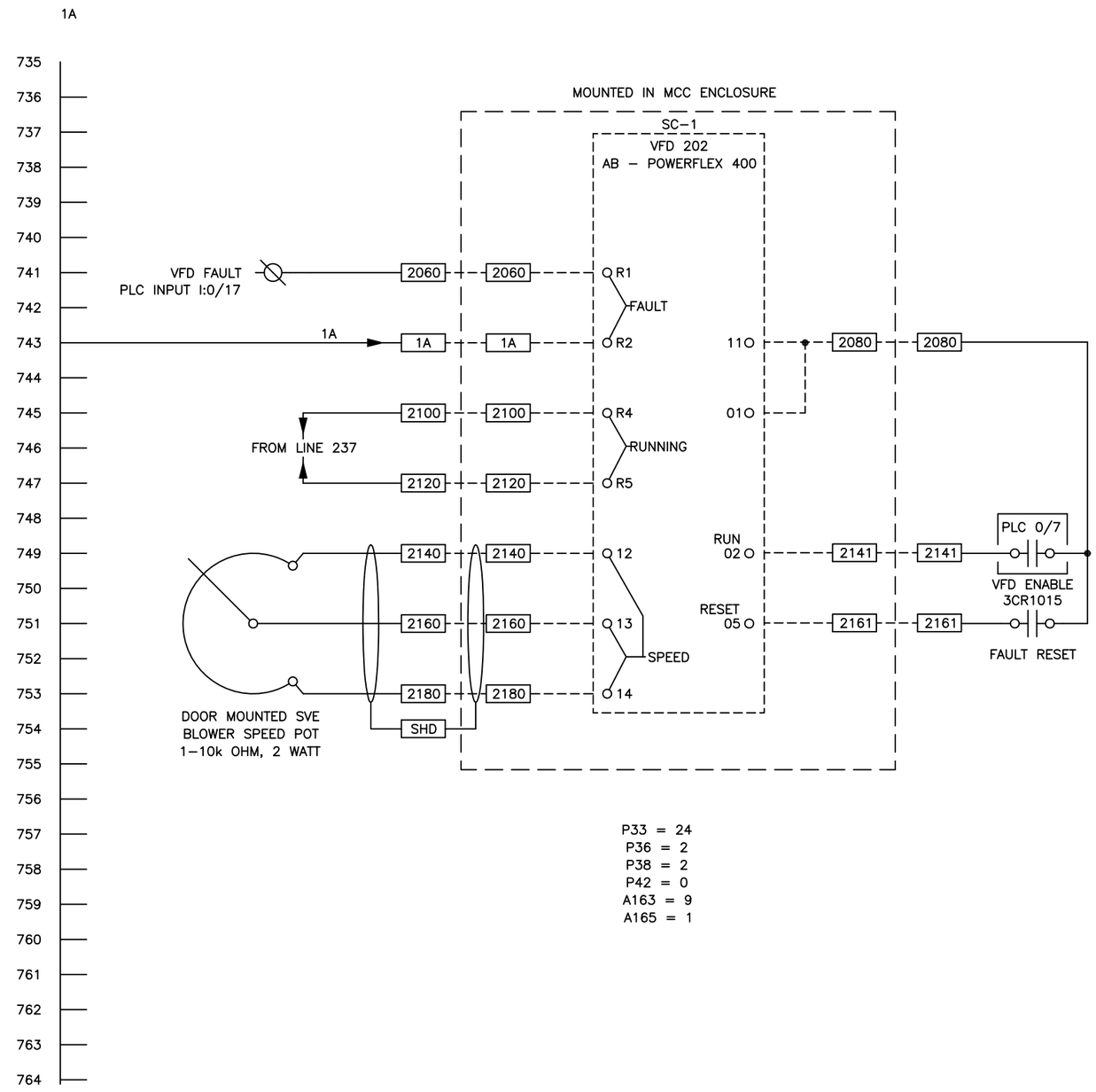

REV	BY	DATE	CHANGE
1	BPH	9/2/11	Submittal

INTELLISHARE ENVIRONMENTAL
CLEAN AIR SOLUTIONS

PROJECT ID

TITLE
ELECTRICAL SCHEMATIC
T02000

DRAWING NO. N−11−1198 −407

SCALE NONE

DRAWN EAM DATE 8/7/11
CHECKED DATE
APPROVED DATE
LAST DRAWN BY EAM DATE 8/7/11

CUSTOMER
Solutia
W.G. Krummerich Facility
Sauget, IL

KF NUMBER 11291
PAGE 1 OF 1

LAST PLOTTED BY EAM DATE 8/7/11

MCP PANEL WIRING

MCP PANEL WIRING

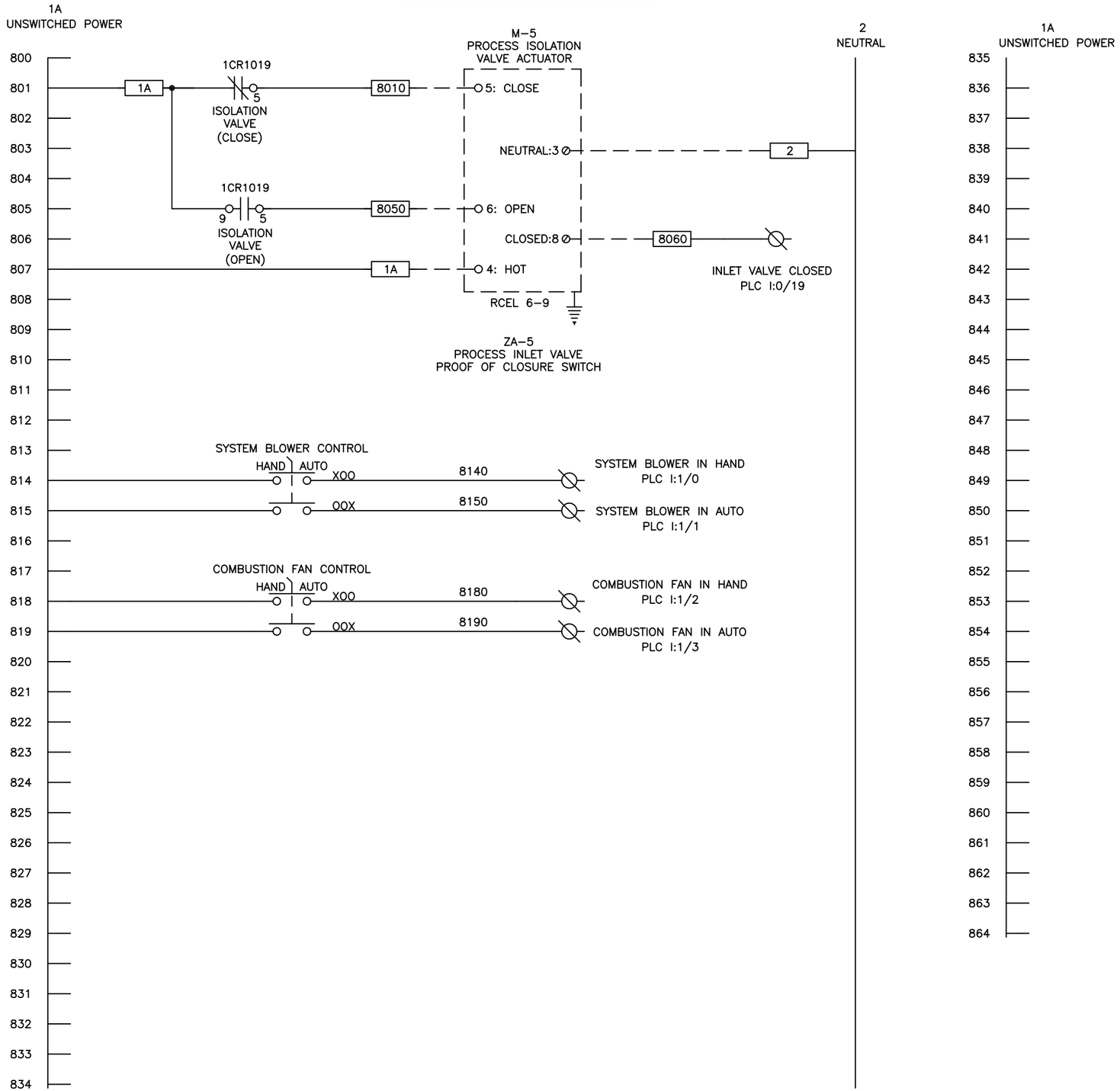

REV	BY	DATE	CHANGE
1	BPH	9/2/11	Submittal

INTELLISHARE ENVIRONMENTAL
CLEAN AIR SOLUTIONS

PROJECT ID

TITLE
ELECTRICAL SCHEMATIC
T02000

DRAWING NO. N–11–1198 –408

SCALE NONE

DRAWN EAM DATE 8/7/11

CHECKED DATE

APPROVED DATE

LAST DRAWN BY EAM DATE 8/7/11

CUSTOMER
Solutia
W.G. Krummerich Facility
Sauget, IL

KF NUMBER 11291

PAGE 1 OF 1

LAST PLOTTED BY EAM DATE 8/7/11

MCP PANEL WIRING

1A UNSWITCHED POWER

2 NEUTRAL

PLC – BASE UNIT
ALLEN–BRADLEY
1766–L32AWA
MICROLOGIX 1400

PLC INPUTS REFERENCE

Line	Signal	Wire	Input	Common
900				
901	E–STOP – SEE LINE 313	1	I:0/0	AC COM0
902	LOW FUEL PRESSURE SWITCH – SEE LINE 320	3200	I:0/1	
903	HIGH FUEL PRESSURE SWITCH – SEE LINE 320	3201	I:0/2	
904	L.E.L. SWITCH – SEE LINE 325	3250	I:0/3	
905	HIGH INLET TEMP – SEE LINE 325	3251	I:0/4	AC COM1
906	HIGH OUTLET TEMP – SEE LINE 325	3252	I:0/5	
907	SYSTEM BLOWER RUNNING – SEE LINE 337	2120	I:0/6	
908	SYSTEM AIR PROVEN – SEE LINE 337	3370	I:0/7	
909	COMBUSTION FAN RUNNING – SEE LINE 343	3430	I:0/8	AC COM2
910	COMBUSTION FAN AIR PROVEN – SEE LINE 343	3431	I:0/9	
911	HIGH DF PRESSURE – SEE LINE 349	3490	I:0/10	
912	BURNER GAS VALVE CLOSED – SEE LINE 353	3530	I:0/11	
913	DUNGS VALVES CLOSED – SEE LINE 353	3531	I:0/12	AC COM3
914	FLAME FAILURE – SEE LINE 423	4230	I:0/13	
915	BURNER ON – SEE LINE 463	4630	I:0/14	
916	SYSTEM READY TEMP – SEE LINE 525	5250	I:0/15	
917	DILUTION VALVE OPEN – SEE LINE 614	6140	I:0/16	
918	SYSTEM BLOWER VFD FAULT – SEE LINE 741	2060	I:0/17	
919	SVE/AS SYSTEM RUNNING – SEE LINE 1047	10470	I:0/18	
920	SYSTEM INLET VALVE CLOSED – SEE LINE 806	8060	I:0/19	
921	INLET TEMP – SEE LINE 5280	5280	IA COM	
922	OUTLET TEMP – SEE LINE 6280	6280	IV (+)	
923	TEMP COMMON – SEE LINE 5300 & 6300	5300	IV (+)	
924				
925				
926				
927				

1762–IA8

Line	Signal	Wire	Input	Common
928	SYSTEM BLOWER IN HAND – SEE LINE 814	8140	I:1/0	
929	SYSTEM BLOWER IN AUTO – SEE LINE 815	8150	I:1/1	AC COM
930	COMBUSTION BLOWER IN HAND – SEE LINE 814	8180	I:1/2	
931	COMBUSTION BLOWER IN AUTO – SEE LINE 815	8190	I:1/3	
932			I:1/4	
933			I:1/5	AC COM
934			I:1/6	
			I:1/7	

MCP PANEL WIRING

1A UNSWITCHED POWER

2 NEUTRAL

935 936 937 938 939 940 941 942 943 944 945 946 947 948 949 950 951 952 953 954 955 956 957 958 959 960 961 962 963 964

1762–IF4

Signal	Wire	Input
INLET AIR FLOW – SEE LINE 702	7020	I:2.0+
	–24	I:2.0–
STACK AIR FLOW – SEE LINE 710	7100	I:2.1+
	–24	I:2.1–
LEL – SEE LINE 719	7210	I:2.2+
	7200	I:2.2–
SPARE	.	I:2.3+
	.	I:2.3–

1762–IT4

Signal	Wire	Input
STACK TEMP TYPE K THERMOCOUPLE TE–3	YELLOW	I:3.0+
	RED	I:3.0–
HEAT EXCHANGER OUTLET TEMP TYPE K THERMOCOUPLE TE–4	YELLOW	I:3.1+
	RED	I:3.1–
FLAME ARRESTOR OUTLET TEMP TYPE K THERMOCOUPLE TE–5	YELLOW	I:3.2+
	RED	I:3.2–
		I:3.3+
		I:3.3–

REV	BY	DATE	CHANGE
1	BPH	9/2/11	Submittal

INTELLISHARE ENVIRONMENTAL
CLEAN AIR SOLUTIONS

PROJECT ID

TITLE
ELECTRICAL SCHEMATIC
T02000

DRAWING NO. N–11–1198 –409

SCALE NONE

DRAWN EAM DATE 8/7/11
CHECKED DATE
APPROVED DATE
LAST DRAWN BY EAM DATE 8/7/11

CUSTOMER
Solutia
W.G. Krummerich Facility
Sauget, IL

KF NUMBER 11291

PAGE 1 OF 1

LAST PLOTTED BY EAM DATE 8/7/11

MCP PANEL WIRING

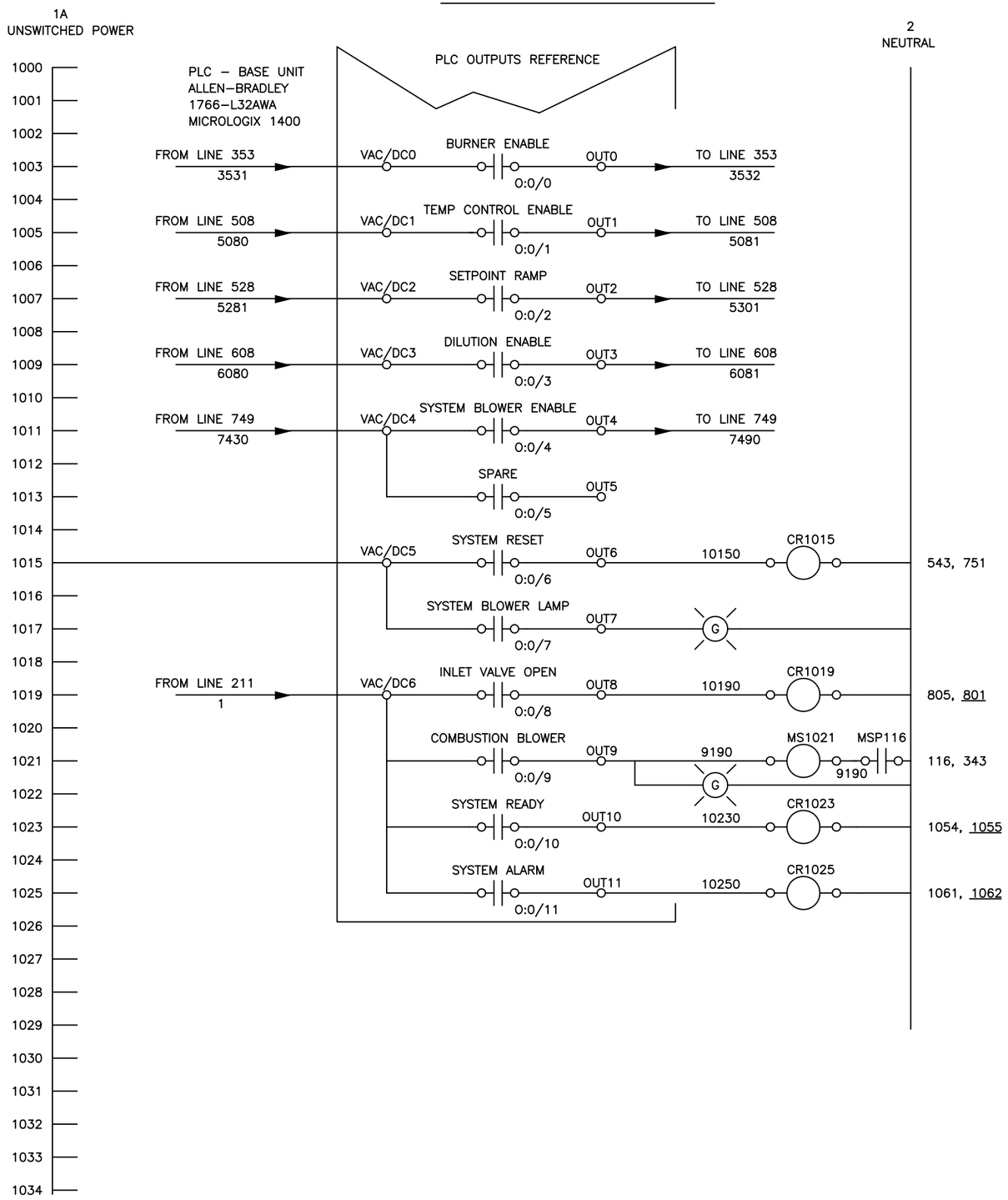

CUSTOMER INTERFACE WIRING
MCP PANEL TO CUSTOMER PANEL

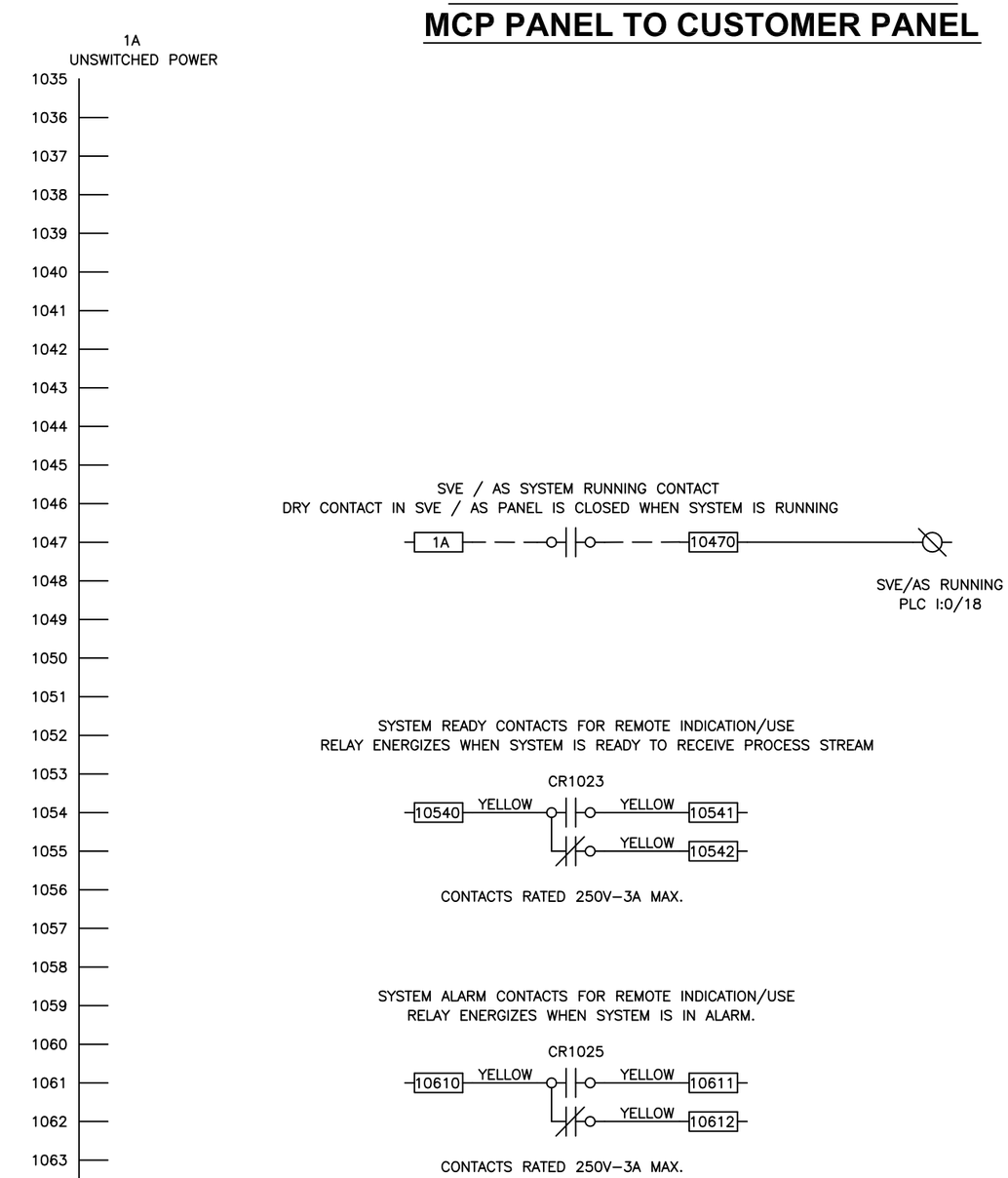

REV	BY	DATE	CHANGE
1	BPH	9/2/11	Submittal

INTELLISHARE ENVIRONMENTAL
CLEAN AIR SOLUTIONS

PROJECT ID

TITLE
ELECTRICAL SCHEMATIC
T02000

DRAWING NO. N–11–1198 –410

SCALE NONE

DRAWN EAM DATE 8/7/11
CHECKED DATE
APPROVED DATE
LAST DRAWN BY EAM DATE 8/7/11

CUSTOMER
Solutia
W.G. Krummerich Facility
Sauget, IL

KF NUMBER 11291
PAGE 1 OF 1

LAST PLOTTED BY EAM DATE 8/7/11

MCP PANEL WIRING

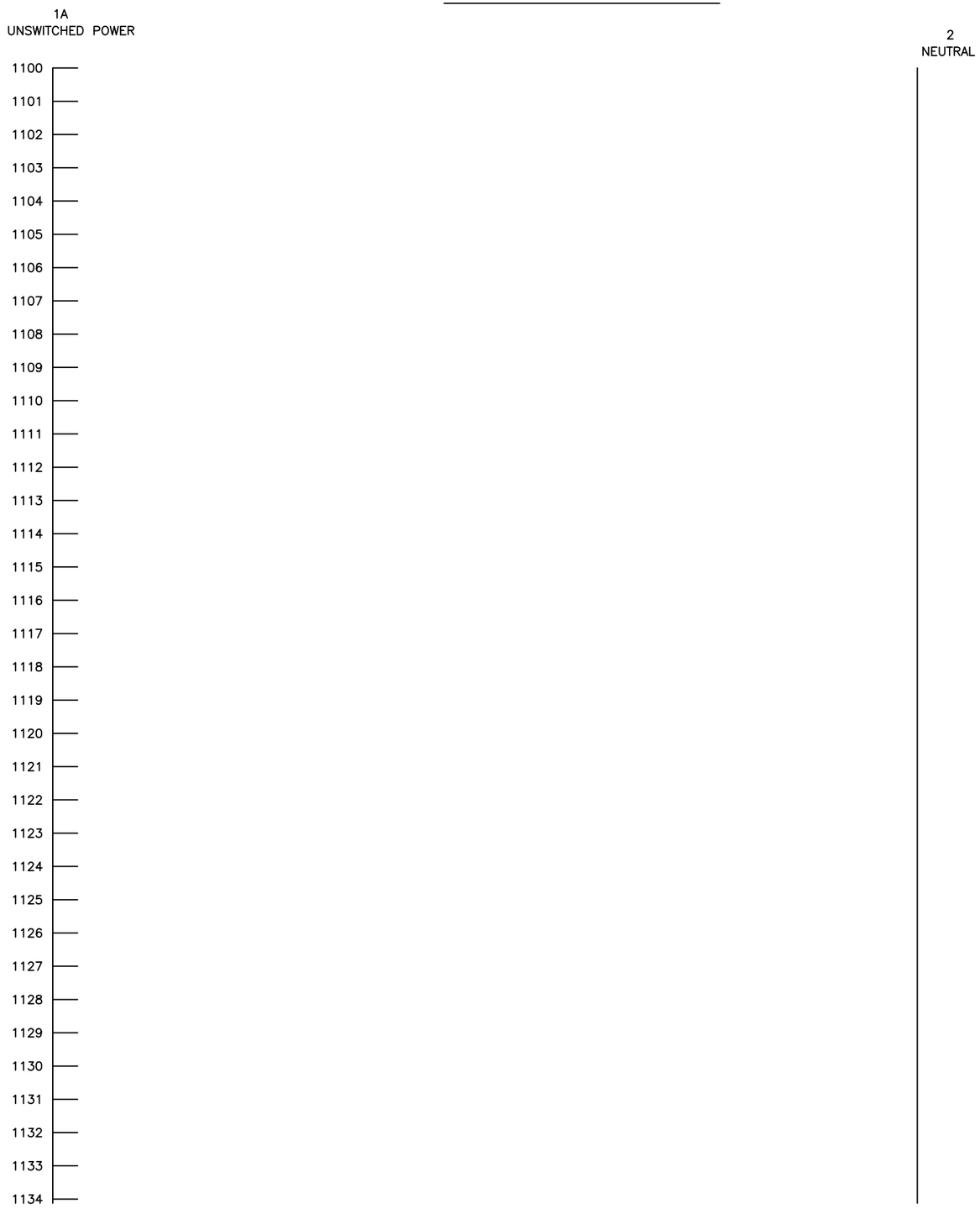

MCP PANEL WIRING

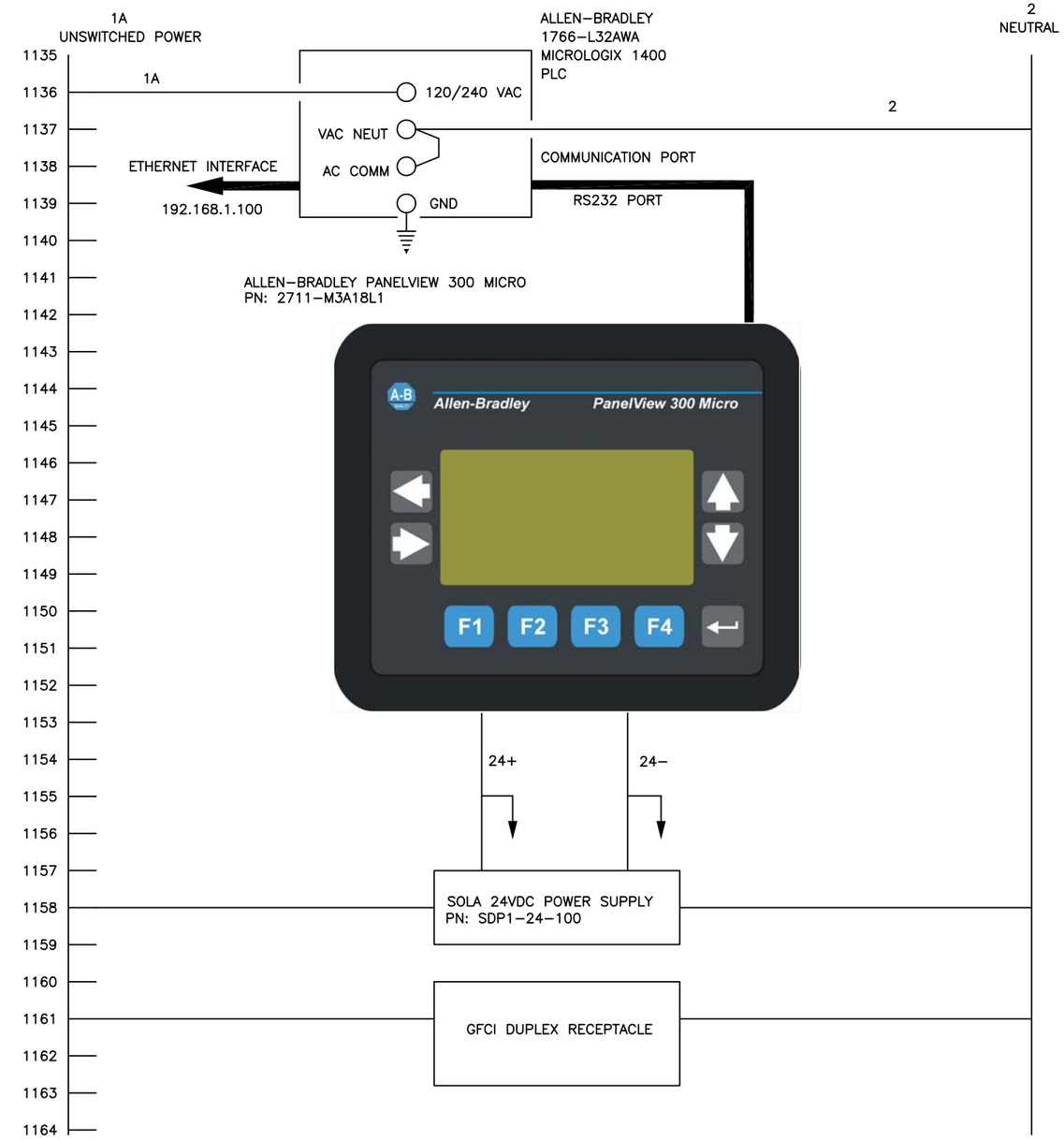

REV	BY	DATE	CHANGE
1	BPH	9/2/11	Submittal

INTELLISHARE ENVIRONMENTAL
CLEAN AIR SOLUTIONS

PROJECT ID

TITLE
ELECTRICAL SCHEMATIC
T02000

DRAWING NO. N–11–1198 –411

SCALE NONE

DRAWN EAM DATE 8/7/11
CHECKED DATE
APPROVED DATE
LAST DRAWN BY EAM DATE 8/7/11

CUSTOMER
Solutia
W.G. Krummerich Facility
Sauget, IL

KF NUMBER 11291

PAGE 1 OF 1

LAST PLOTTED BY EAM DATE 8/7/11

MCC PANEL WIRING

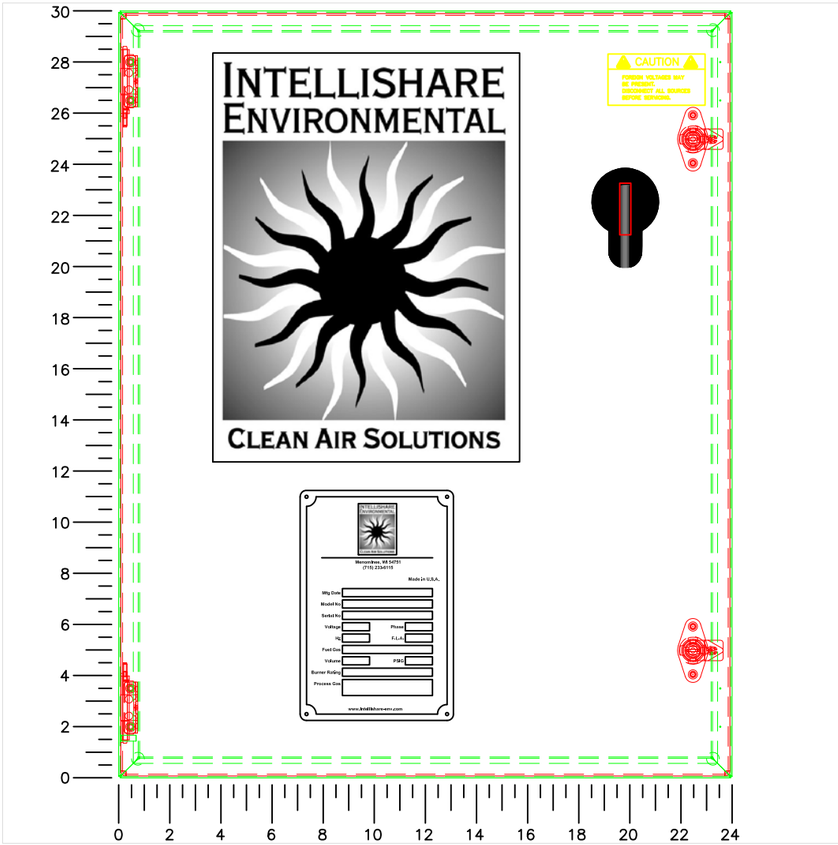

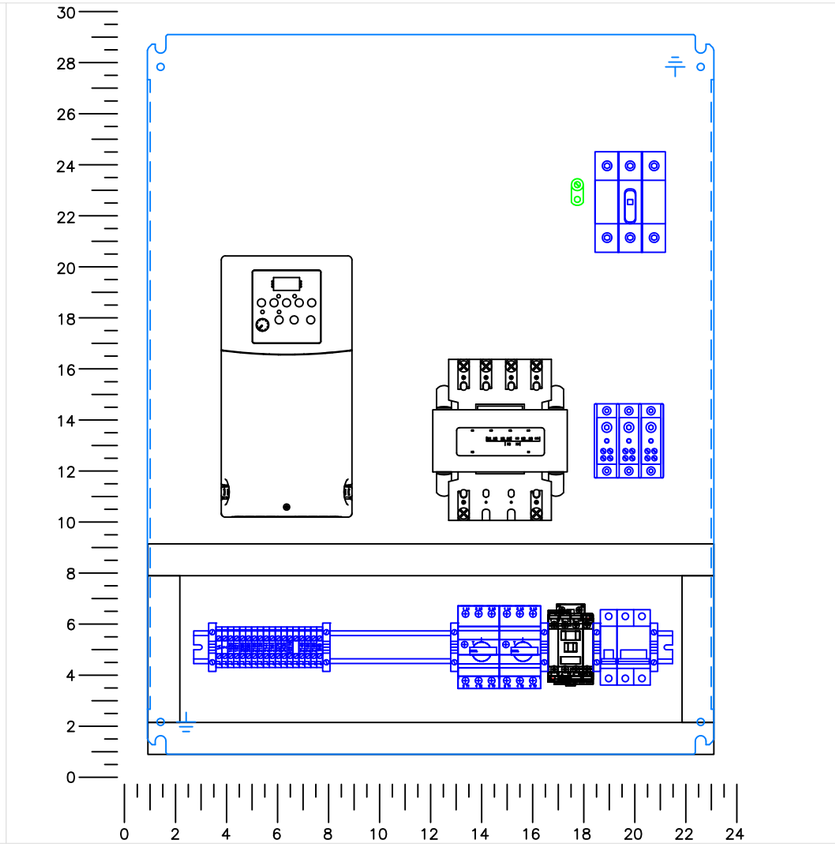

ITEM	QTY.	DESCRIPTION	PART NUMBER	MFG.
1	1	ENCLOSURE – 30" x 24" x 10"	CSD302410SS	HOFFMAN
2	1	SUBPANEL – 30" x 24"	CP3024	HOFFMAN
3				
4	1	CONTROL TRANSFORMER 460/230–115, 500VA	E500	HEVI–DUTY
5	1	CIRCUIT BREAKER 5A, 2P	WMZT2C05	EATON
6	1	CIRCUIT BREAKER 7A, 1P	WMZT1C07	EATON
7	1	DISTRIBUTION BLOCK	16220–3	BUSSMAN
8	6	WIREWAY	F1X3WH6	PANDUIT
	6	WIREWAY COVER	C1WH6	PANDUIT
9	1	CONTACTOR	100–C23D10	A–B
10	1	MOTOR CIRCUIT PROTECTOR	140M–C2E–C16	A–B
	1	MOTOR CIRCUIT PROTECTOR AUX CONTACT	140M–C–AFA10	A–B
11	1	POWERFLEX 400 VFD, 20 HP	22C–D030N103	A–B
12	1	MOTOR CIRCUIT PROTECTOR	140M–F8E–C32	A–B
13	1	MOTOR CIRCUIT PROTECTOR AUX CONTACT	140M–C–AFA10	A–B
14	1	GROUND LUG	L70	CONNECTOR MFG
15	1	CUSTOM DEVICE TAG – WARNING LABEL	TAG–CUS	CUSTOM ENGRAVING
16	14	TERMINAL BLOCK	1492–J3	A–B
	1	TERMINAL END BARRIER	1492–EBJ3	A–B
	1	TERMINAL BLOCK JUMPER	1492–CJLJ5–50	A–B
	3	TERMINAL BLOCK BLUE	1492–J3B	A–B
	1	TERMINAL BLOCK – GROUNDING	1492–JG3	A–B
17	6	DIN RAIL END CLAMP	1492–EAJ35	A–B
18	1	35MM DIN RAIL – SHALLOW	173220.05	ENTERLEC
19	1	35MM DIN RAIL – DEEP	101598.26	ENTERLEC
20	1	GROUND LUG	L70	CONNECTOR MFG
21	2	VENT KIT	A–VK64SS	HOFFMAN
22	2	FILTER KIT	A–FLT64	HOFFMAN
23	1	NON–FUSED DISCONNECT	OT63F3	ABB
	1	NON–FUSED DISCONNECT SHAFT	OXP6X290	ABB
	1	NON–FUSED DISCONNECT HANDLE	OHY65J6	ABB

CAUTION (12)

FOREIGN VOLTAGES MAY BE PRESENT. DISCONNECT ALL SOURCES BEFORE SERVICING.

ENLARGED VIEW OF TERMINAL BLOCKS

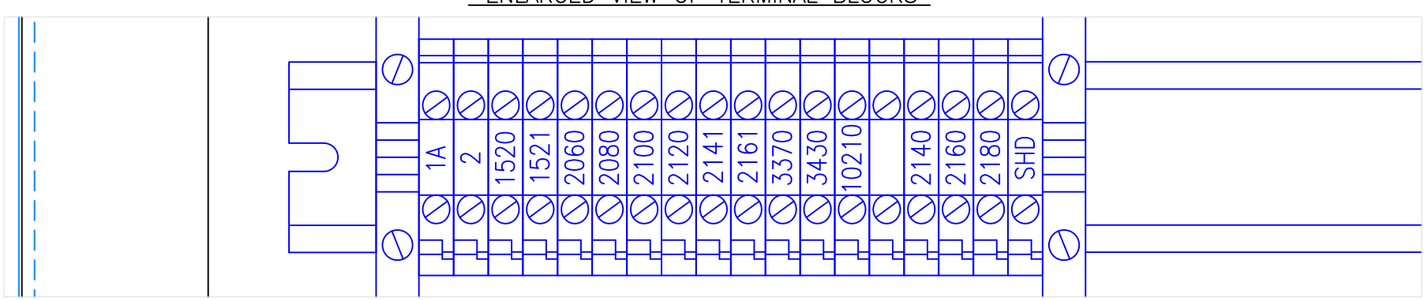

REV	BY	DATE	CHANGE
1	BPH	9/2/11	Submittal

INTELLISHARE ENVIRONMENTAL
CLEAN AIR SOLUTIONS

PROJECT ID

TITLE
ELECTRICAL SCHEMATIC
T02000

DRAWING NO. N–11–1198 –450

SCALE NONE

DRAWN EAM DATE 8/7/11

CHECKED DATE

APPROVED DATE

LAST DRAWN BY EAM DATE 8/7/11

CUSTOMER
Solutia
W.G. Krummerich Facility
Sauget, IL

KF NUMBER 11291

PAGE 1 OF 1

LAST PLOTTED BY EAM DATE 8/7/11

MCP PANEL WIRING

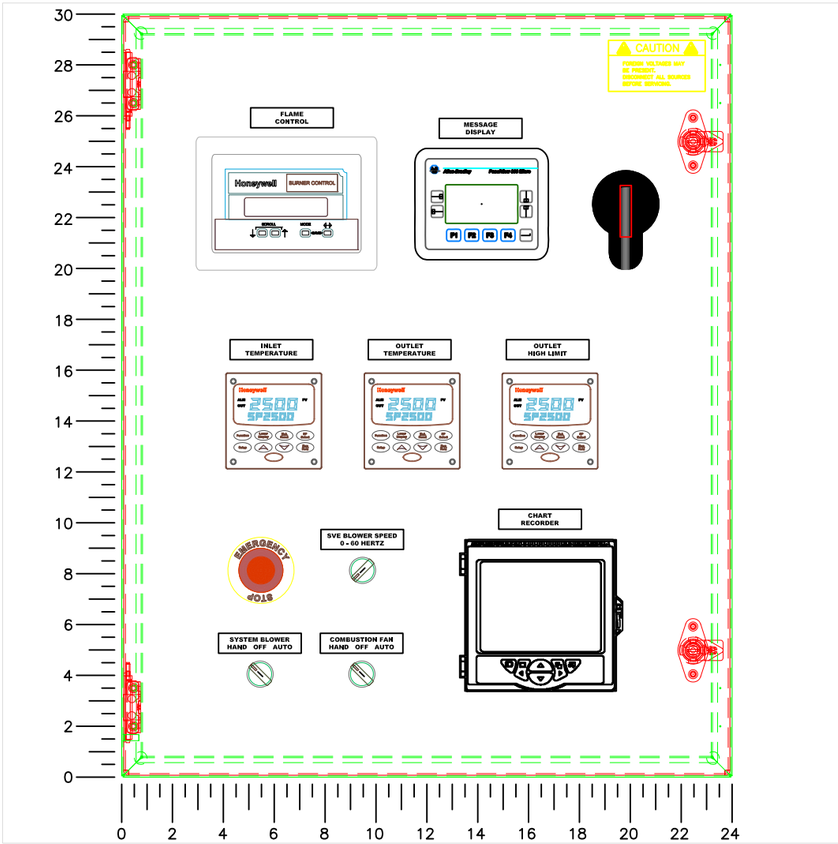

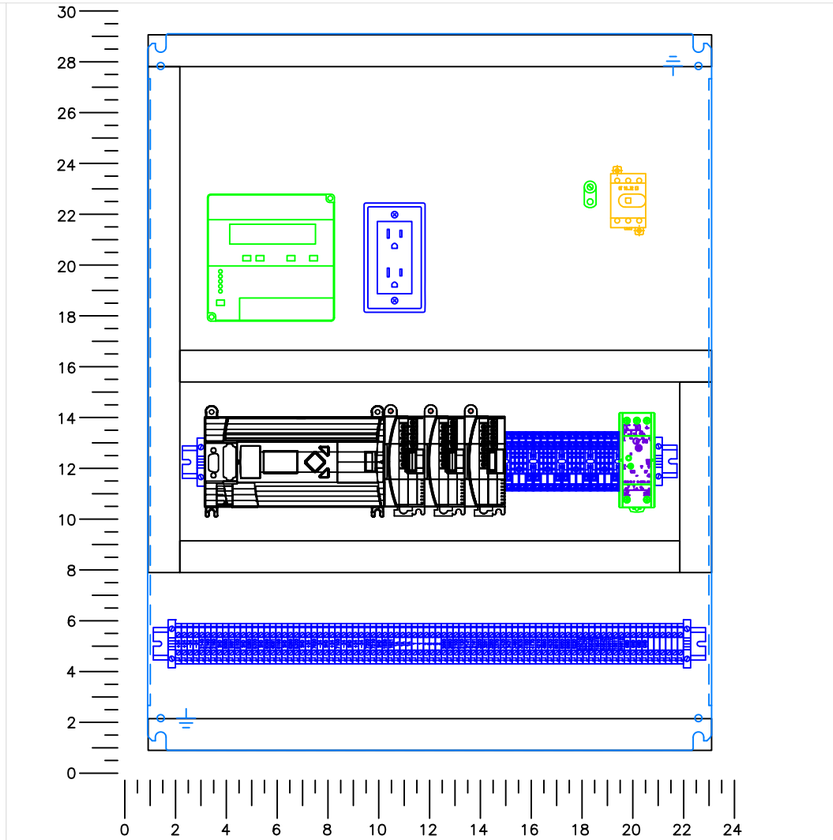

ITEM	QTY.	DESCRIPTION	PART NUMBER	MFG.
1	1	ENCLOSURE – 30" x 24" x 10"	CSD302410SS	HOFFMAN
2	1	SUBPANEL – 30" x 24"	CP3024	HOFFMAN
3				
4	1	DUPLEX RECEPTICLE + COVER GFCI	7599–I	LEVITON
	1	HANDY BOX	58361–1/2	STEEL CITY
5	4	CONTROL RELAY – 4 POLE	RU4S–CA110	IDEC
	4	CONTROL RELAY BASE – 4 POLE	SY4S–05	IDEC
6	5	CUSTOM DEVICE TAG	TAG–CUS	CUSTOM ENGRAVING
7	1	CUSTOM DEVICE TAG – WARNING LABEL	TAG–CUS	CUSTOM ENGRAVING
8	1	PB POT ASSEMBLY	800FP–POT6	A–B
9	6	DIN RAIL END CLAMP	1492–EAJ35	A–B
10	1	35MM DIN RAIL – SHALLOW	173220.05	ENTERLEC
11	1	35MM DIN RAIL – DEEP	101598.26	ENTERLEC
12	1	GROUND LUG	L70	CONNECTOR MFG
13	40	TERMINAL BLOCK	1492–J3	A–B
	1	TERMINAL END BARRIER	1492–EBJ3	A–B
	1	TERMINAL BLOCK JUMPER	1492–CJLJ5–50	A–B
	27	TERMINAL BLOCK BLUE	1492–J3B	A–B
	12	TERMINAL BLOCK – GROUNDING	1492–JG3	A–B
14	1	POWER SUPPLY	PSG60E	EATON
15	1	PANELVIEW 300 MESSAGE DISPLAY	2711–M3A18L1	A–B
16	1	MESSAGE DISPLAY CABLE	1761–CBL–HM02	A–B
17	11	WIREWAY	F1X3WH6	PANDUIT
	11	WIREWAY COVER	C1WH6	PANDUIT
18	1	PLC BASE UNIT	1766–L32AWA	A–B
	1	PLC INPUT MODULE	1762–IA8	A–B
	1	PLC ANALOG INPUT MODULE	1762–IF4	A–B
	1	PLC THERMCOUPLE INPUT MODULE	1762–IT4	A–B
19	1	PB E–STOP OPERATOR (E–STOP)	800FP–MP44	A–B
	1	PB BACKER	800F–ALP	A–B
	1	PB E–STOP LEGEND	800F–15YE112	A–B
	1	PB NC CONTACT BLOCK	800F–X01	A–B
20	1	TEMPERATURE LIMIT – DC2500–EE–1L00–200–10000–E–0–0		HONEYWELL
21	1	TEMPERATURE CONTROLLER – DC2500–CE–1A00–200–00000–00–0		HONEYWELL
22	1	TEMPERATURE CONTROLLER – DC2500–CE–1A00–200–00000–00–0		HONEYWELL
23	1	FLAME SAFEGUARD	RM7895B–1013	HONEYWELL
	1	FLAME SAFEGUARD MOUNTING BASE	Q7800A–1005	HONEYWELL
	1	FLAME STRENGTH AMPLIFIER	R7847A–1033	HONEYWELL
	1	PRE–PURGE TIMER 30 SEC.	ST7800A–1039	HONEYWELL
	1	DISPLAY MODULE	S7800A–1142	HONEYWELL
24	1	PAPERLESS CHART RECORDER	SM503FB/U000000E/STD	ABB
25	1	NON–FUSED DISCONNECT	OT45F3	ABB
	1	NON–FUSED DISCONNECT SHAFT	OXP6X290	ABB
	1	NON–FUSED DISCONNECT HANDLE	OHY65J6	ABB
26	2	PB ILLUMINATED SELECTOR OPERATOR	800FM–LSL33	A–B
	2	PB BACKER	800F–ALP	A–B
	2	PB LED	800F–N5G	A–B
	4	PB NO CONTACT BLOCK	800F–X10	A–B

ALL TAGS BLACK WITH WHITE LETTERS

A FLAME CONTROL (11)
B MESSAGE DISPLAY (11)
C SYSTEM BLOWER HAND OFF AUTO (11)
D COMBUSTION BLOWER HAND OFF AUTO (11)
E INLET TEMPERATURE (11)
F OUTLET TEMPERATURE (11)
G OUTLET HIGH LIMIT (11)
H BLOWER SPEED 0 – 60 HERTZ (11)
J
K

CAUTION (12)

FOREIGN VOLTAGES MAY BE PRESENT. DISCONNECT ALL SOURCES BEFORE SERVICING.

ENLARGED VIEW OF TERMINAL BLOCKS

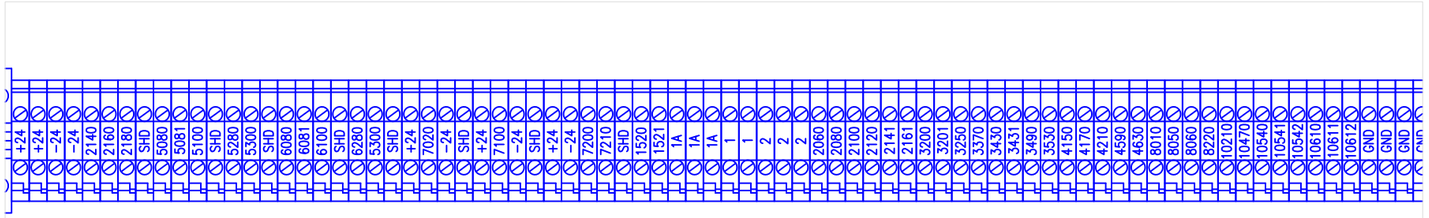

REV	BY	DATE	CHANGE
1	BPH	9/2/11	Submittal

INTELLISHARE ENVIRONMENTAL
CLEAN AIR SOLUTIONS

PROJECT ID

TITLE
ELECTRICAL SCHEMATIC
T02000

DRAWING NO. N–11–1198 –451

SCALE NONE

DRAWN EAM DATE 8/7/11

CHECKED DATE

APPROVED DATE

CUSTOMER
Solutia
W.G. Krummerich Facility
Sauget, IL

LAST DRAWN BY EAM DATE 8/7/11

KF NUMBER 11291

PAGE 1 OF 1

LAST PLOTTED BY EAM DATE 8/7/11

Wiring Instructions/Information

Field Connection	Terminal Strip	Function Text
Y	1	Low Fuel Pressure SW – Common
Y	3200	Low Fuel Pressure SW – Return
Y	3200	High Fuel Pressure SW – Common
Y	3201	High Fuel Pressure SW – Return
O	2301	L.E.L. SW – Common (Optional)
O	3250	L.E.L. SW – Return (Optional)
Y	2100	System Air SW – Common
Y	2120	System Air SW – Return
O	3430	Combustion Air Pressure SW – Common
O	3431	Combustion Air Pressure SW – Return
Y	3431	High DF Pressure SW – Common
Y	3490	High DF Pressure SW – Return
Y	4150	Ignition Transformer – Black Wire
Y	2	Ignition Transformer – White Wire
Y	4170	Pilot Solenoid Valves – Red Wire
Y	2	Pilot Solenoid Valves – Red Wire
Y	2	Blocking & Main Gas Valve Actuator Terminal #1
Y	4210	Blocking & Main Gas Valve Actuator Terminal #2
Y	4210	Blocking & Main Gas Valve Actuator Terminal #3
Y	1	Gas Valve SW – Common – Terminal #3
Y	4590	Gas Valve SW – Return – Terminal #1
Y	4630	Gas Valve SW – Return – Terminal #2
Y	3490	Burner Valve Actuator SW – Common
Y	3530	Burner Valve Actuator SW – Return
Y	1	Dilution Valve Actuator SW – Common
Y	6140	Dilution Valve Actuator SW – Return
Y	1A	Burner Valve Actuator Main Power – L1
Y	2	Burner Valve Actuator Main Power – L2
Y	1A	Dilution Valve Actuator Main Power – L1
Y	2	Dilution Valve Actuator Main Power – L2
Y	1A	Inlet Valve Closed Limit Switch – Common
Y	8060	Inlet Valve Closed Limit Switch – Return
Y	8050	Inlet Valve Open
Y	8010	Inlet Valve Close
Y	2	Inlet Valve Common
Y	1A	Inlet Valve Hot
Y	1A	Heat Exchange Exit High Temp – Feed
Y	8220	Heat Exchange Exit High Temp – Return

Terminal Block TB1 (Control Voltage)

Terminal block "TB1" represents all Control Voltage terminal connections. The "Field Conn." column is marked with an "Y" to identify required field connections, and an "O" for optional connections.

All wiring shall be RED 14 guage type THHN and must be isolated from low voltage wiring.

Warning: Follow appropriate guidlines when wiring to classified environment.

Field Connection	Terminal Strip	Function Text
Y	5081	Burner Valve Actuator – Analog Command (–)
Y	5100	Burner Valve Actuator – Analog Command (+)
Y	6081	Dilution Valve Actuator – Analog Command (–)
Y	6100	Dilution Valve Actuator – Analog Command (+)
Y	+24	Inlet Air Flow – Input
Y	7020	Inlet Air Flow – Output
Y	+24	Stack Air Flow – Input
Y	7100	Stack Air Flow – Output
Y	+24	LEL Power (+)
Y	–24	LEL Power (–)
Y	7210	LEL Output (+)
Y	7200	LEL Output (–)

Terminal Block TB2 (Low Voltage)

Terminal block "TB2" represents all Low Voltage terminal connections. The "Field Conn." column is marked with an "Y" to identify required field connections, and an "O" for optional connections.

All wiring shall be 18 AWG 3 conductor shielded belden cable or equivilent and must be isolated from high voltage wiring.

Warning: Follow appropriate guidlines when wiring to classified environment.

INCOMING POWER - 460V, 3 Phase

Incoming power shall be wired to the Fuse Block provided, see schematic line #101.
Wire must be sized to meet NEC & Local code requirements.

MOTOR CONNECTIONS

All field wiring for motors shall be black in color and sized to meet local and NEC requirements.

Connections are to be made directly from motor to overload block as shown on page 401 of the schematic.

All motor ground connections are to be connected to ground bar on panel.

Always isolate from any low voltage wiring.

The motors to be wired are shown below:

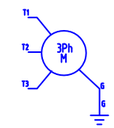

MTR	VOLTS	AMPS	WIRE
1M	460V	24	10AWG
2M	460V	12	14AWG
3M			

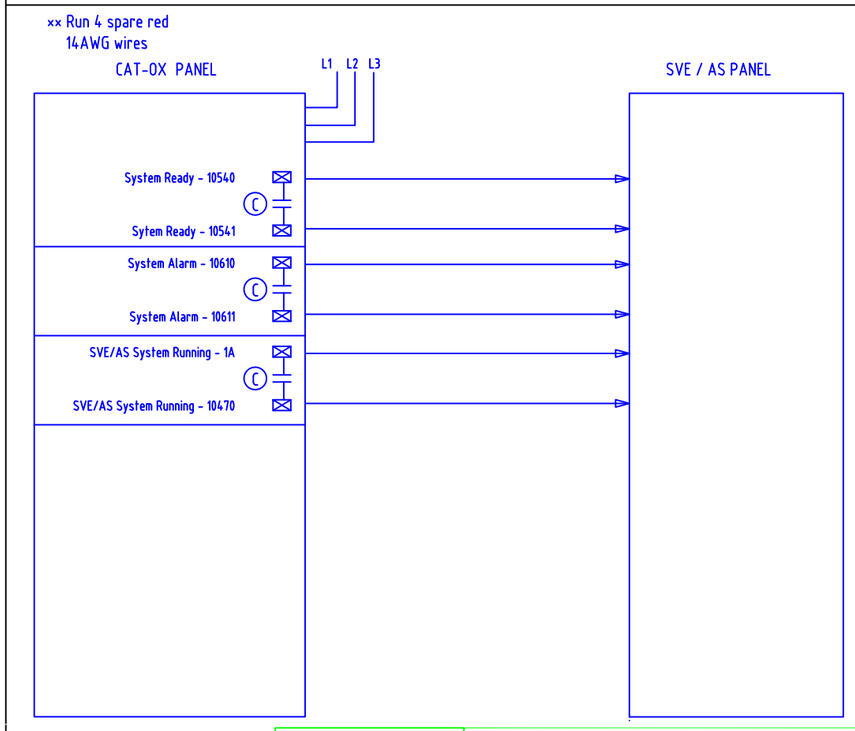

REV	BY	DATE	CHANGE
1	BPH	9/2/11	Submittal

INTELLISHARE ENVIRONMENTAL
CLEAN AIR SOLUTIONS

PROJECT ID

TITLE: ELECTRICAL SCHEMATIC
T02000

DRAWING NO. N–11–1198 –460

SCALE NONE

DRAWN EAM DATE 8/7/11
CHECKED DATE
APPROVED DATE
LAST DRAWN BY EAM DATE 8/7/11

CUSTOMER
Solutia
W.G. Krummerich Facility
Sauget, IL

KF NUMBER 11291

PAGE 1 OF 1

LAST PLOTTED BY EAM DATE 8/7/11

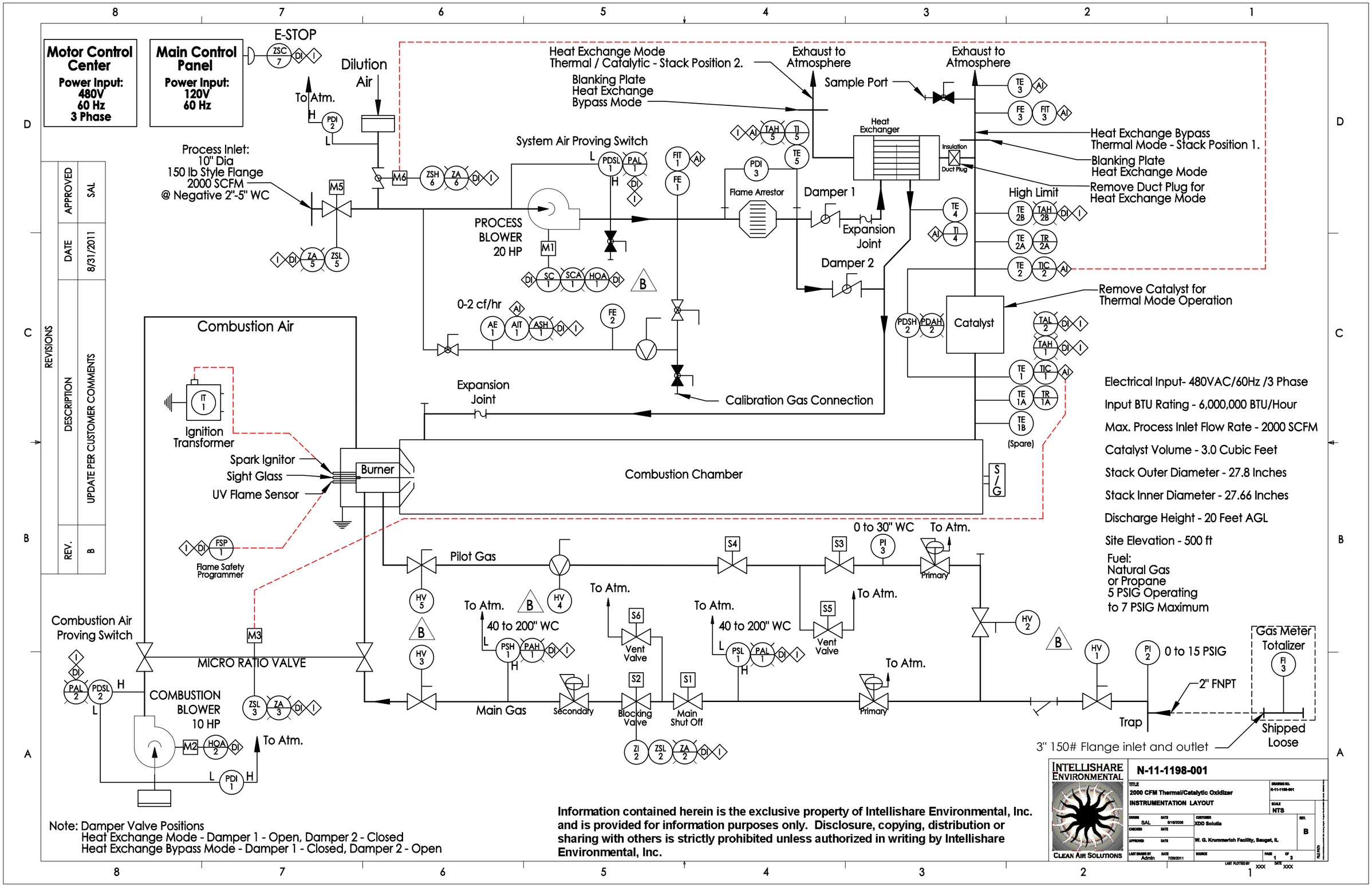

Note: Damper Valve Positions
Heat Exchange Mode - Damper 1 - Open, Damper 2 - Closed
Heat Exchange Bypass Mode - Damper 1 - Closed, Damper 2 - Open

Measured Variable		Succeding Letters		Valve Bodies		Miscellaneous		Operators	
A	Analysis	A	Alarm		Valve (N.O. or Unspecified)		Centrifugal Blower	M	Electric Motor
F	Flow Rate	C	Controller		Valve Normally Closed			S	Solenoid
I	Current	D	Differential		Ball Valve		Flow Orifice		Manual
L	Level	E	Primary Element		Check Valve			S/G	Sight Glass
M	Motor	H	High		Butterfly Valve		Electrical Line		
P	Pressure	I	Indicator		Damper		Pneumatic Line		Vortex Damper
T	Temperature	L	Light		Orifice Valve		Process Ductwork		
Z	Position	L	Low				Panel Mounted Instrument		
		R	Record		Pressure Regulator (Self Contained)		Locally Mounted Instrument		Filter
		S	Switch				Mounted Inside Panel	AI	Analog Input
		T	Transmitter		Pressure Regulator (External Backload)		Alarm	DI	Digital Input
		V	Valve				Transition	I	Interlock
				T	Sample Port				

Information contained herein is the exclusive property of Intellishare Environmental, Inc. and is provided for information purposes only. Disclosure, copying, distribution or sharing with others is strictly prohibited unless authorized in writing by Intellishare Environmental, Inc.

INTELLISHARE ENVIRONMENTAL
CLEAN AIR SOLUTIONS

N-11-1198-001

TITLE: 2000 CFM Thermal/Catalytic Oxidizer
INSTRUMENTATION LEGEND

DRAWING NO.: N-11-1198-001
SCALE: NTS
REV.: B

DRAWN: SAL	DATE: 6/13/2011	CUSTOMER: XDD Solutia	
CHECKED	DATE		
APPROVED	DATE	W. G. Krummerich Facility, Sauget, IL	
LAST DRAWN BY: Admin	DATE: 7/20/2011	SOURCE	PAGE 2 OF 3

LAST PLOTTED BY: XXX DATE: XXX

FILE PATH:

MODE	OXIDIZER READY CONTACT	OXIDIZER ALARM CONTACT	INLET VALVE M5	DILUTION VALVE M6	SYSTEM FAN M1	SYSTEM FAN SPEED CONTROL SC1	OXIDIZER COMBUSTION BLOWER M2	FIRING RATE VALVE M3	FUEL TRAIN BLOCKING VALVES S1,S2,S3,S4	FUEL TRAIN VENT VALVES S5,S6	OXIDIZER FLAME SAFETY FSP1
SYSTEM STOP	DISABLED	ENABLED	CLOSED	OPEN	DISABLED	DISABLED	DISABLED	CLOSED	CLOSED	OPEN	DISABLED
SYSTEM START PURGE	DISABLED	DISABLED	CLOSED	OPEN	ENABLED	PRE-SET VALUE 2000 SCFM	ENABLED	CLOSED	CLOSED	OPEN	DISABLED
SYSTEM PRE-HEAT	DISABLED	DISABLED	CLOSED	OPEN	ENABLED	PRE-SET VALUE 2000 SCFM	ENABLED	OPEN	OPEN	CLOSED	ENABLED
SYSTEM RUN	ENABLED	DISABLED	OPEN	ENABLED	ENABLED	PRE-SET VALUE 2000 SCFM	ENABLED	OPEN	OPEN	CLOSED	ENABLED
SYSTEM COOL-DOWN	DISABLED	DISABLED	CLOSED	OPEN	ENABLED 240 SEC.	PRE-SET VALUE 2000 SCFM	ENABLED 240 SEC.	CLOSED	CLOSED	OPEN	DISABLED
SYSTEM ALARM	DISABLED	ENABLED	CLOSED	OPEN	ENABLED 240 SEC.	PRE-SET VALUE 2000 SCFM	ENABLED 240 SEC.	CLOSED	CLOSED	OPEN	DISABLED
POWER FAULT	DISABLED	ENABLED	CLOSED	OPEN	DISABLED	DISABLED	DISABLED	CLOSED	CLOSED	OPEN	DISABLED

Information contained herein is the exclusive property of Intellishare Environmental, Inc. and is provided for information purposes only. Disclosure, copying, distribution or sharing with others is strictly prohibited unless authorized in writing by Intellishare Environmental, Inc.

INTELLISHARE ENVIRONMENTAL
CLEAN AIR SOLUTIONS

N-11-1198-001

TITLE: 2000 CFM Thermal/Catalytic Oxidizer
MODE CHART

DRAWING NO. N-11-1198-001
SCALE NTS
REV. B

DRAWN SAL DATE 8/15/2011
CHECKED DATE
APPROVED DATE
CUSTOMER XDD Solutia
W. G. Krummerich Facility, Sauget, IL
LAST DRAWN BY Admin DATE 7/28/2011
SOURCE
PAGE 3 OF 3
LAST PLOTTED BY XXX DATE XXX
FILE PATH

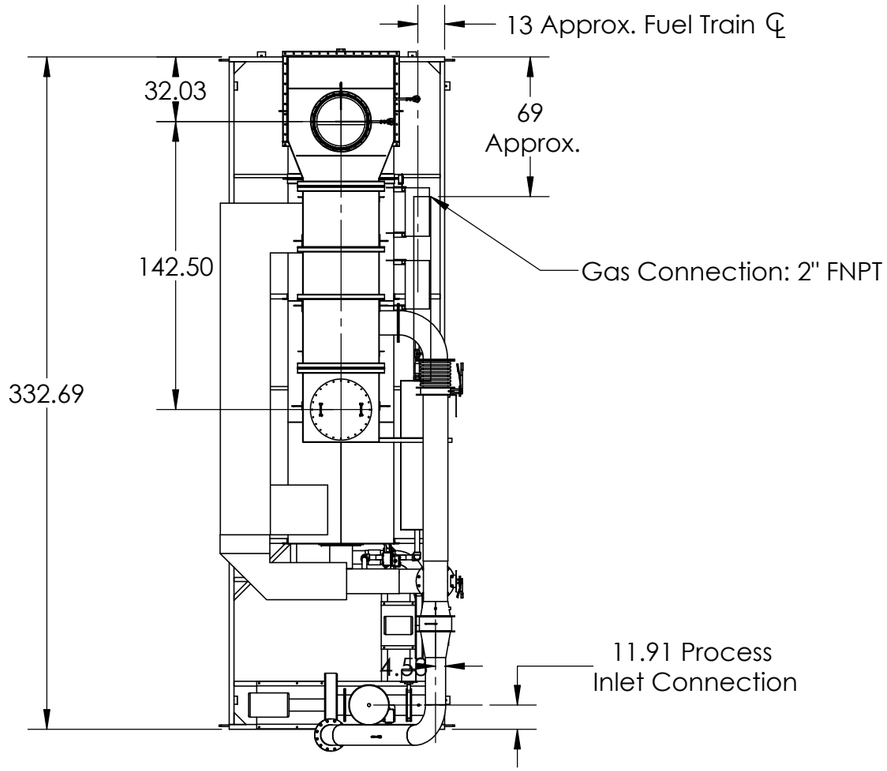

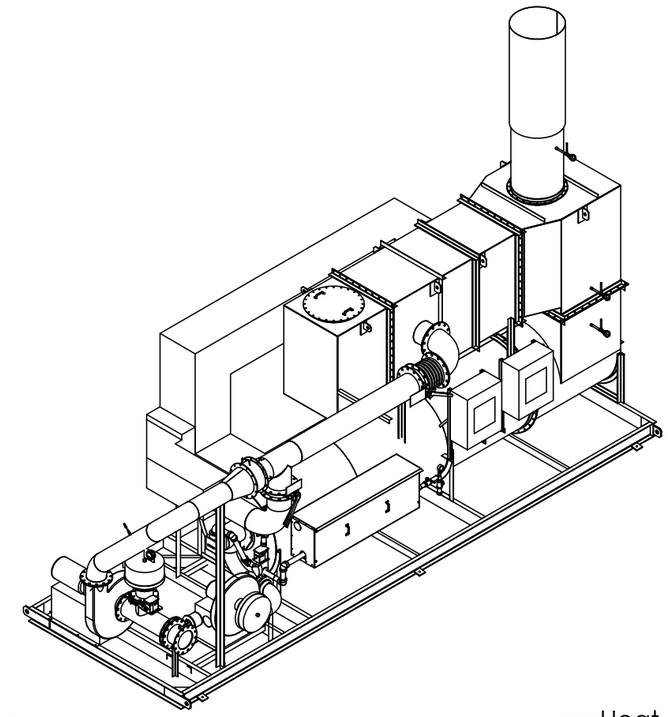

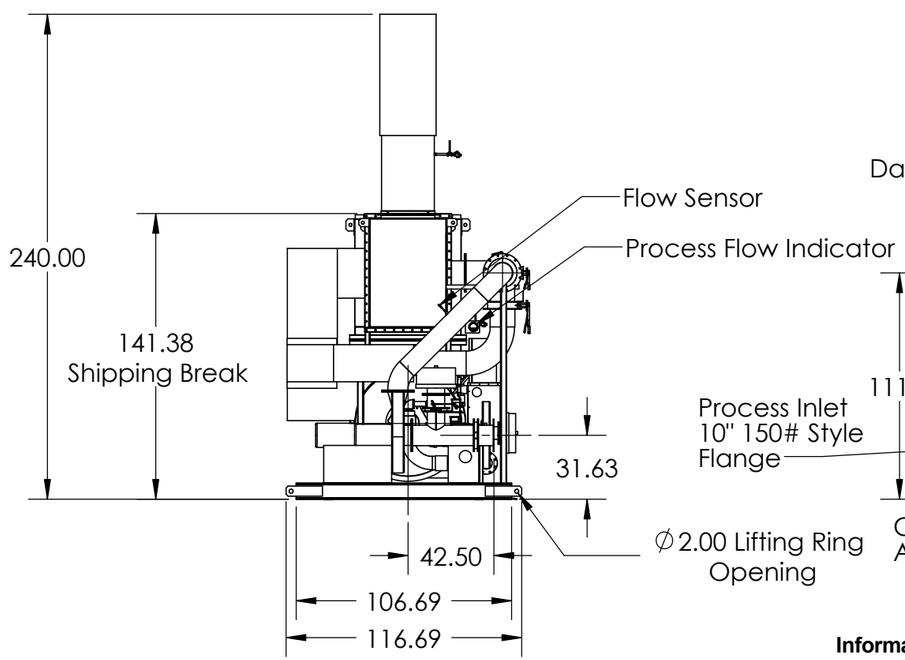

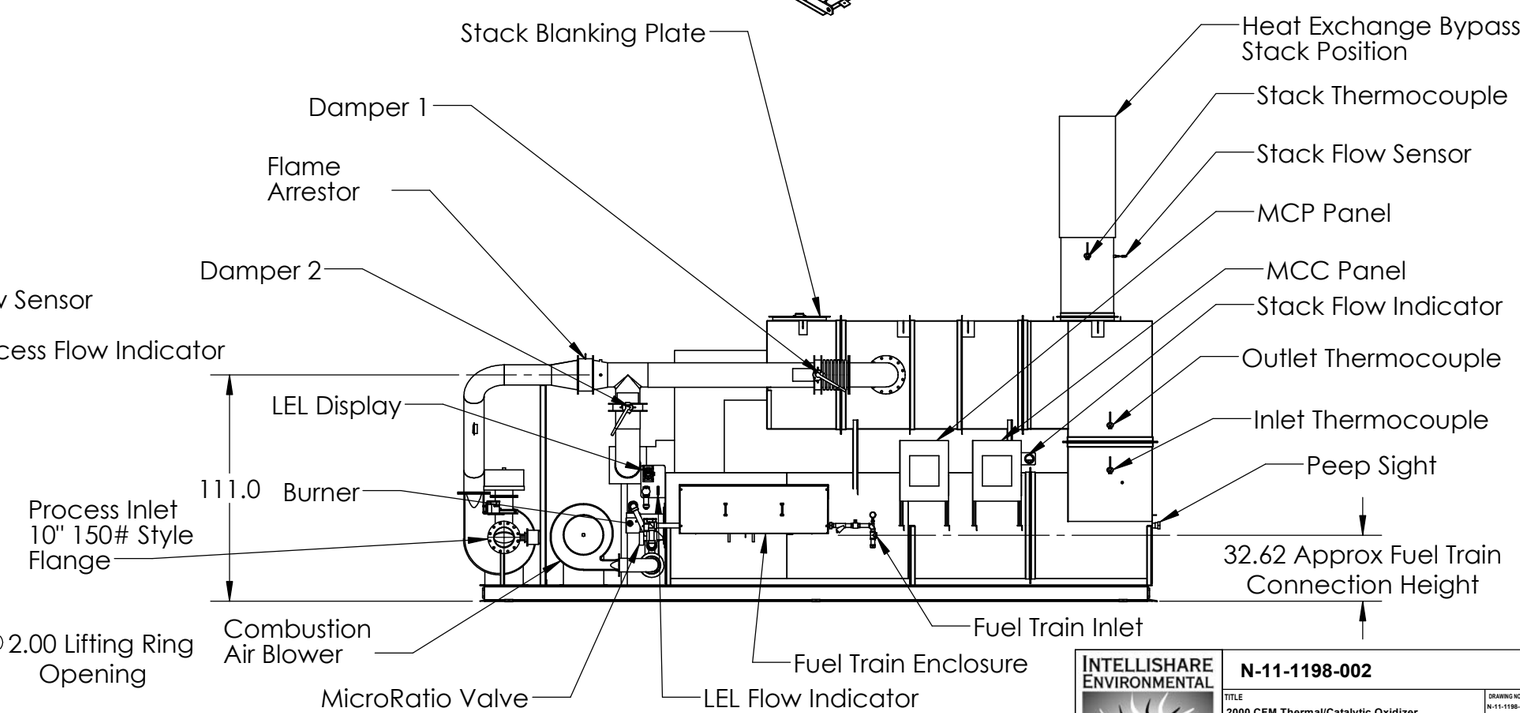

Note: All dimensions given in Inches unless otherwise indicated.

Information contained herein is the exclusive property of Intellishare Environmental, Inc. and is provided for information purposes only. Disclosure, copying, distribution or sharing with others is strictly prohibited unless authorized in writing by Intellishare Environmental, Inc.

INTELLISHARE ENVIRONMENTAL
CLEAN AIR SOLUTIONS

N-11-1198-002

TITLE	**2000 CFM Thermal/Catalytic Oxidizer** **General Assembly Drawing**
DRAWING NO.	N-11-1198-002
SCALE	NTS
DRAWN	SAL 7/30/2007
CHECKED	
APPROVED	
LAST DRAWN BY	Admin 8/12/2011
CUSTOMER	XDD Solutia
	W.G. Krummerich Facility, Sauget, IL
SOURCE	
REV.	-
PAGE	1 OF 1
LAST PLOTTED BY	XXX DATE XXX

General Installation Notes

1. Failure to follow installation instructions may void manufacturer's warranty.
2. Prior to performing any maintenance activities, varify that the unit is shut down using applicable lock out tag out procedures. Also verify that the unit has cooled to a safe temperature.
3. Once system arrives on site visually inspect all components for any damage in transit and document any damage with the shipping carrier and Intellishare Environmental.
4. Store catalyst modules in a clean dry area.
5. For crane unloading, utilize spreader bars and lifting straps to balance the load prior to lift. Use caution and prevent damage to components.
6. Support trailer mounted units at all corners of the trailer using concrete blocks or other suitable blocking. Remove all weight from the wheels and axle for long term use. Use shims to level the trailer to within ¼".
7. Install the stack in the correct orientation without gaskets. Mounting hardware is provided.
8. Install the Thermocouple using stainless anti-seize compound on the threaded connection at the half coupling and the thermocouple connection. (See Detail A)
9. Install the Thermocouple Wiring and Differential pressure tubing to the stack connections. See Section B-B and the Terminal Designation Chart. Insert each thermocouple wire into its designated terminal so that only one wire is inserted into each terminal. Thermocouple connections are extremely sensitive and must be tightened to insure good electrical contact but not so tight as to cause the wire to fracture. Verify each connection by gently tugging on the wire checking for looseness. (Tubing, Conduit, & Wiring provided by Intellishare Environmental)
10. Install inlet piping to the process inlet connection. Verify all line debris has been removed from the inlet process line. All inlet piping should be independently supported. Multiple process line connections should be made with proper transitions to prevent turbulence and excessive pressure loss.
11. Connect fuel gas line to oxidizer fuel train inlet connection. Verify line size, supply volume and pressure requirements. Supply gas pressure must not exceed (7) psig static pressure in order to prevent damage to the gas train components. Leak test the entire gas train from the main gas inlet to the oxidizer burner. Any leaks should be repaired.
12. Connect main power to the oxidizer control panel. Verify proper voltage, phase, and all motor rotation. Voltage should be plus or minus 10% of rated voltage. Note: Do not make conduit penetrations into the top of the oxidizer control panel.
13. Connect any interface wiring between other's control panel and the oxidizer control panel. Note: Do not make conduit penetrations into the top of the oxidizer control panel. Thermocouple wire should be of the appropriate type and run in separate conduit from other wiring. Sensing and / or thermocouple wiring should not be run in high voltage conduit. Pull (4) spare interface wires.
14. For extended shut down periods, cover the exhaust stack to protect the system from the elements. The main gas line should be closed at the gas regulator and the oxidizer main gas train inlet valve. Turn off main power.

Thermal Mode Heat Exchange Bypass

1. Special insulating material pre-installed in the transition to protect the face of the heat exchanger tube sheet during heat exchange bypass mode.
2. Damper 1, is closed blocking incoming process flow from entering the heat exchanger.
3. Damper 2, is open alowing process flow to enter the combustion chamber directly.
4. Stack is in stack position 1, without gaket on flange.
5. Blanking plate is in stack position 2, with gasket on flange.
6. Temperature controls must be set per instructions in the O&M manual provided by Intellishare Environmental. Incorrect settings could adversely affect performance and could void manufacturer's warranty.

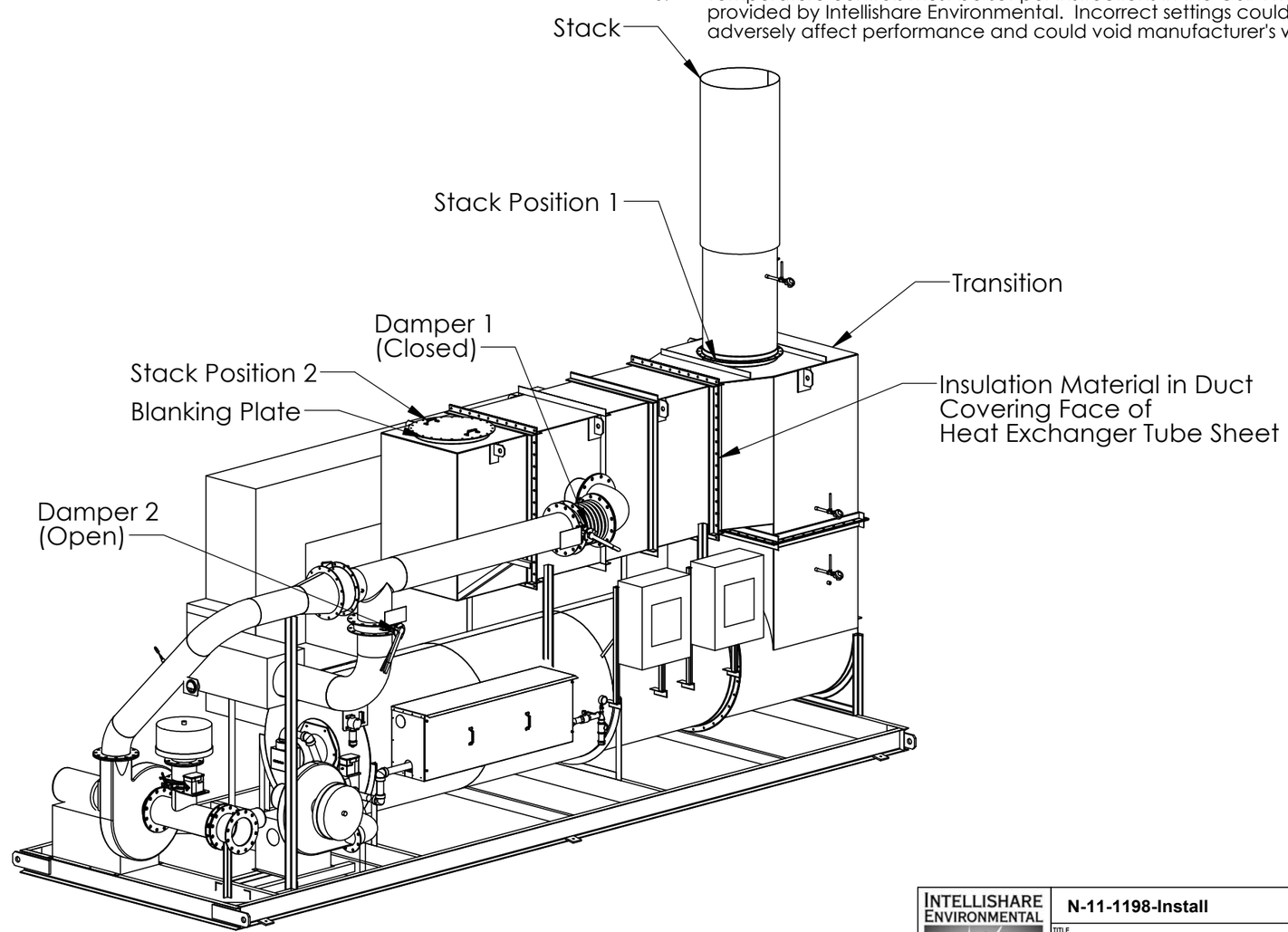

Information contained herein is the exclusive property of Intellishare Environmental, Inc. and is provided for information purposes only. Disclosure, copying, distribution or sharing with others is strictly prohibited unless authorized in writing by Intellishare Environmental, Inc.

INTELLISHARE ENVIRONMENTAL
CLEAN AIR SOLUTIONS

N-11-1198-Install

TITLE	2000 CFM THERMAL/CATALYTIC OXIDIZER INSTALL - MODE CHANGE DRAWING
DRAWING NO.	N-11-1198-Install
SCALE	NTS
DRAWN	SAL 8/2/2006
CHECKED	
APPROVED	
LAST DRAWN BY	Admin 8/12/2011
CUSTOMER	XDD Solutia W.G. Krummerich Facility, Sauget, IL
REV.	-
SOURCE	
PAGE	1 OF 4
LAST PLOTTED BY	XXX DATE XXX

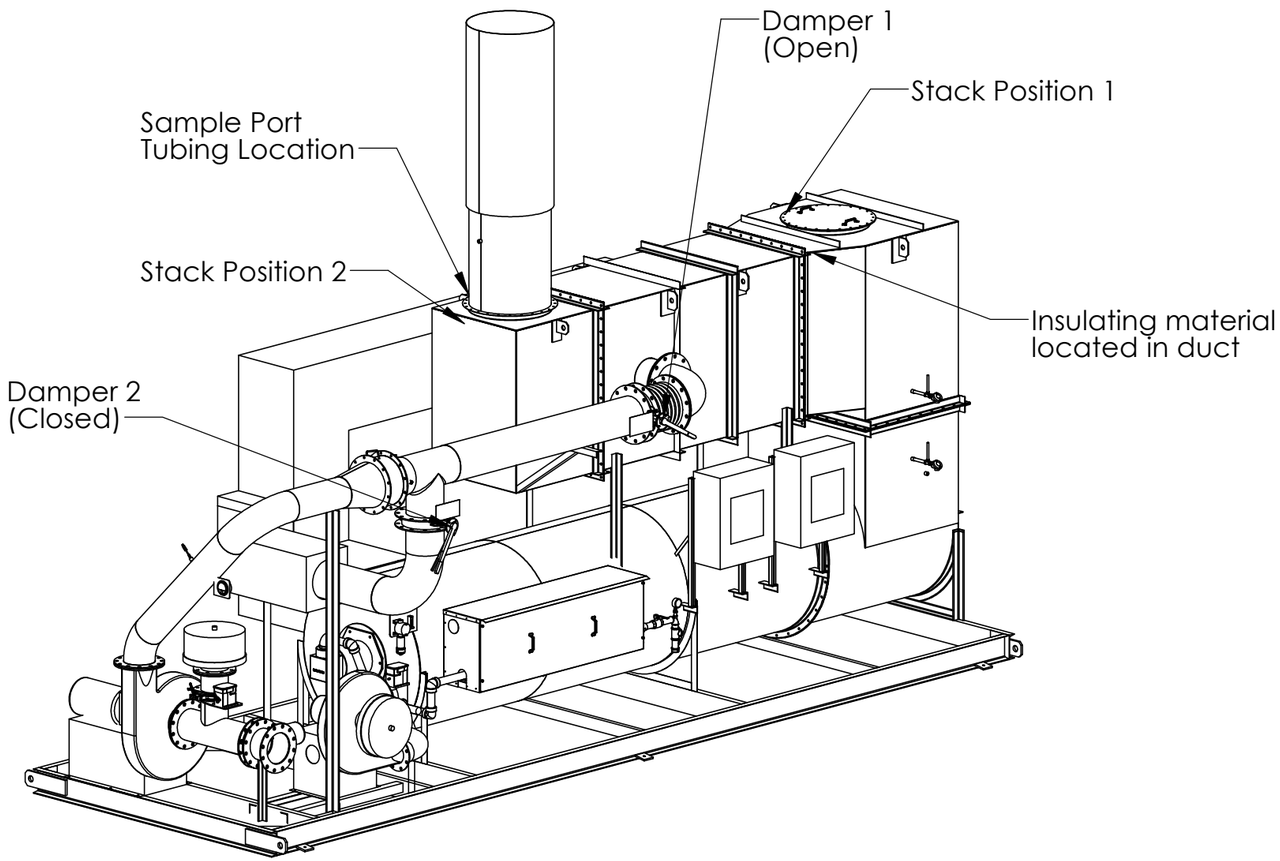

Thermal Mode Heat Exchange Enabled

1. Remove the small length of pipe between the stack and the sample port plumbing. Store this in a clean dry area for future use.
2. Remove the stack from position 1.
3. Locate the insulation removal hook originally shipped in crate 1.
4. Using the insulation removal hook, carefully remove the special insulating material through the stack position 1 opening. This insulation is pre-installed in the transition to protect the face of the heat exchanger during heat exchange bypass mode and consists of soft blocks that are approximately 8 inches thick. Be carefull not to damage the rigid insulation behind these blocks. After removing the 8" material, the duct opening should measure appoximately 16" wide by 30" tall and all tube openings should be visible.
5. Remove the blanking plate and gasket from its location (stack position 2).
6. Locate the shorter sample tube pipe stored in crate1. Install the stack in the stack position 2 location, aligning the sample port connection with the tubing connection. Reuse the stainless fasteners removed with the stack. No gasket is required. Install the shorter length of tubing between the stack and sample port plumbing.
7. Install the blanking plate on the stack position 1 opening. A gasket is required and may be cut to length from the roll of drop warp tape shipped in crate 1. Keep unused portion for future use.
8. Damper 1, is open, allowing incoming process flow to enter the heat exchanger and pass through to the combustion chamber.
9. Damper 2, is closed blocking process flow from entering the combustion chamber directly.
10. Temperature controls must be set per instructions in the O&M manual provided by Intellishare Environmental. Incorrect settings could adversely affect performance and could void manufacturer's warranty.

General Notes

1. Failure to follow installation instructions may void manufacturer's warranty.
2. Because of the size and weight of components, appropriate mechanical lift assistance is recommended.
3. Prior to performing any maintenance activities, varify that the unit is shut down using applicable lock out tag out procedures. Also verify that the unit has cooled to a safe temperature.

Information contained herein is the exclusive property of Intellishare Environmental, Inc. and is provided for information purposes only. Disclosure, copying, distribution or sharing with others is strictly prohibited unless authorized in writing by Intellishare Environmental, Inc.

INTELLISHARE ENVIRONMENTAL
CLEAN AIR SOLUTIONS

N-11-1198-Install

TITLE: 2000 CFM THERMAL/CATALYTIC OXIDIZER INSTALL - MODE CHANGE DRAWING			DRAWING NO. N-11-1198-Install
			SCALE NTS
DRAWN SAL	DATE 8/2/2006	CUSTOMER XDD Solutia	REV. -
CHECKED	DATE		
APPROVED	DATE	W.G. Krummerich Facility, Sauget, IL	
LAST DRAWN BY Admin	DATE 8/12/2011	SOURCE	PAGE 2 OF 4

LAST PLOTTED BY XXX DATE XXX

RELEASE

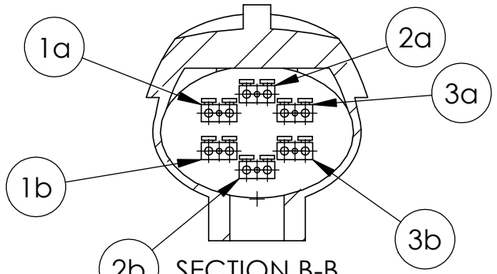

SECTION B-B
SCALE 1 : 2

Thermocouple Terminal Designations

Element	Terminal #	J	K
TE2	1a	White	Yellow
	1b	Red	Red
TE2A	2a	White	Yellow
	2b	Red	Red
TE2B	3a	White	Yellow
	3b	Red	Red

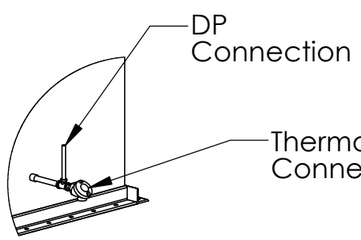

DETAIL C
SCALE 1 : 24

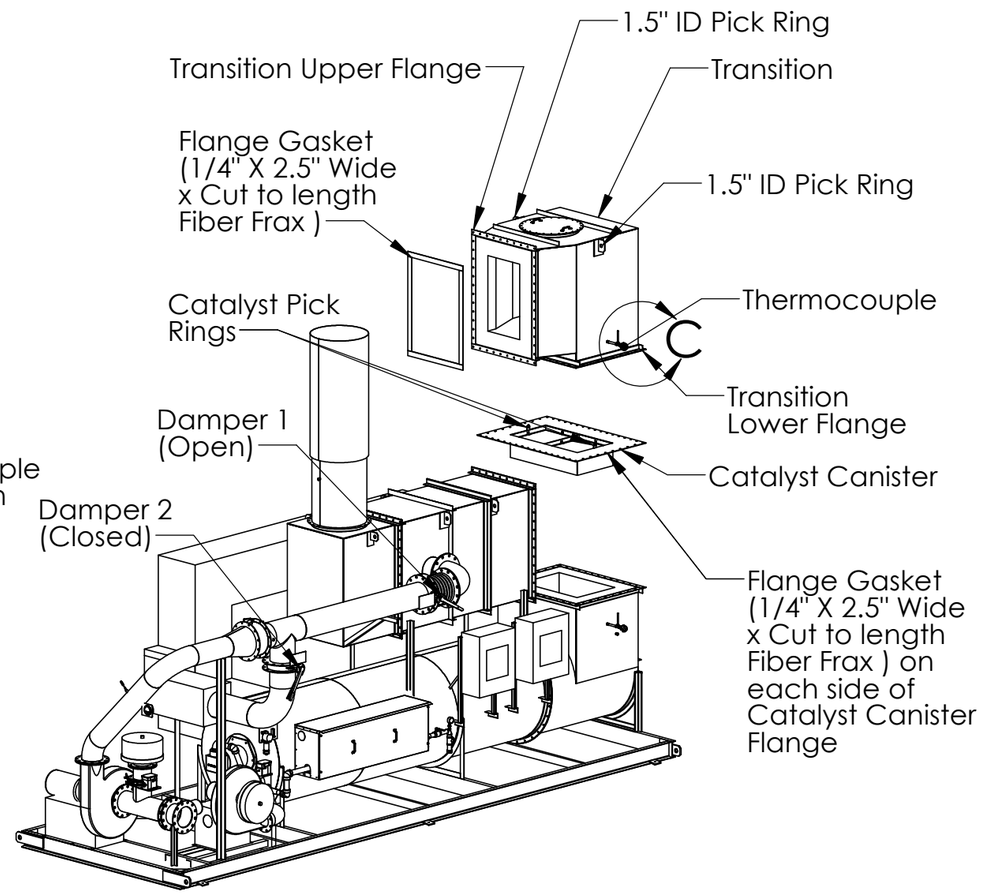

Catalytic Mode Heat Exchange Enabled

1. Disconnect the catalyst DP tubing from its connection above the outlet thermocouple.
2. Disconnect the wiring and conduit from the outlet thermocouple.
3. Disconnect the sample port not currently used that is to the right of the control panel.
4. Remove bolts from the transition upper flange.
5. Remove bolts from the transition lower flange.
6. Check that nothing is attached to the transition and carefully separate from the heat exchanger and the oxidizer and lift using the 1.5" ID pick rings provided.
7. Remove the spacer flange (shown on page 4)and store in a clean dry area for future use.
8. Install gaskets on both lower transition flanges. Reuse material if fit for use. New material (1/4" x 2.5" x cut to length), is provided in crate 1, with the catalyst module.
9. Lower the Catalyst into position using the 1" ID Catalyst Pick rings. Align Catalyst flange with the flange below so that all holes are centered.
10. Install a new gasket on the upper transition flange. The previous gasket may be reused if in good condition. New material (1/4" x 2.5" x cut to length), is provided in crate 1, with the catalyst module. If installing new material position all pieces so that they fit flush to one another and cover the entire face of the flange. Use the flange as a template and create holes for bolts using a tapered punch, by pushing the punch through the flange holes.
11. Carfully lower the transition into position so that flange holes are properly aligned.
12. Verify that all gaskets are in position.
13. Reuse flange bolts removed during disassembly and tighten the upper and lower transition flanges.
14. Reconnect the catalyst DP tubing to the outlet thermocouple DP connection.
15. Reconnect the outlet thermocouple electrical connections per the connection diagram on this sheet. Varify each connection by gently tugging on each wire when done.
16. Reattach the sample port plumbing disconnected earlier in this procedure.
17. Damper 1, is open allowing incoming process flow to enter the heat exchanger, then pass through to the combustion chamber.
18. Damper 2, is closed blocking process flow from entering the combustion chamber directly.
19. Temperature controls must be set per instructions in the O&M manual provided by Intellishare Environmental. Incorrect settings could adversely affect performance and could void manufacturer's warranty.

General Notes

1. Failure to follow installation instructions may void manufacturer's warranty.
2. Because of the size and weight of components, appropriate mechanical lift assistance is recommended.
3. Prior to performing any maintenance activities, varify that the unit is shut down using applicable lock out tag out procedures. Also verify that the unit has cooled to a safe temperature.

Information contained herein is the exclusive property of Intellishare Environmental, Inc. and is provided for information purposes only. Disclosure, copying, distribution or sharing with others is strictly prohibited unless authorized in writing by Intellishare Environmental, Inc.

INTELLISHARE ENVIRONMENTAL
CLEAN AIR SOLUTIONS

N-11-1198-Install

TITLE	2000 CFM THERMAL/CATALYTIC OXIDIZER INSTALL - MODE CHANGE DRAWING
DRAWING NO.	N-11-1198-Install
SCALE	NTS
DRAWN	SAL DATE 8/2/2006
CHECKED	DATE
APPROVED	DATE
LAST DRAWN BY	Admin DATE 8/12/2011
CUSTOMER	XDD Solutia
SOURCE	W.G. Krummerich Facility, Sauget, IL
REV.	-
PAGE	3 OF 4
LAST PLOTTED BY	XXX DATE XXX

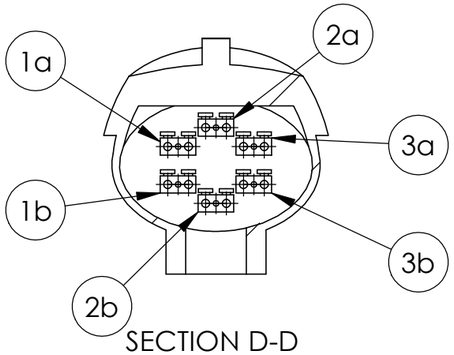

SECTION D-D
SCALE 1 : 2

Thermocouple Terminal Designations

Element	Terminal #	J	K
TE2	1a	White	Yellow
	1b	Red	Red
TE2A	2a	White	Yellow
	2b	Red	Red
TE2B	3a	White	Yellow
	3b	Red	Red

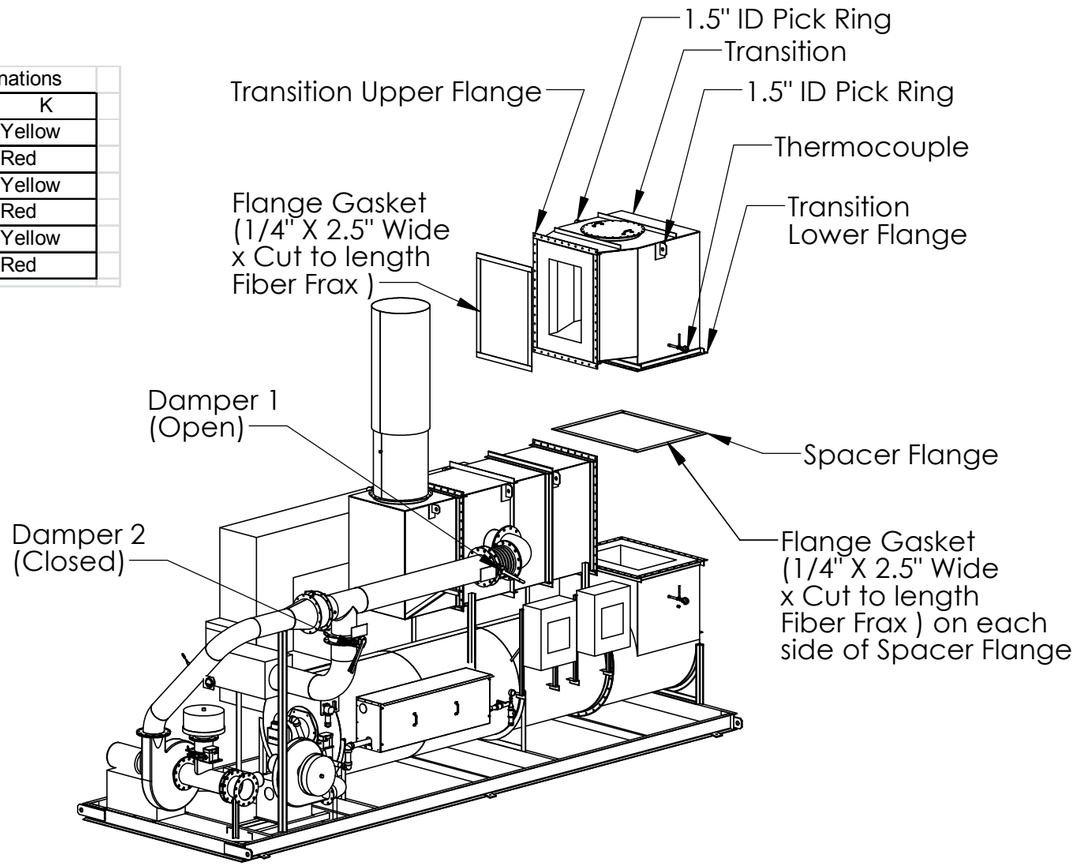

Thermal Mode Heat Exchange Enabled (Change from Catalytic to Thermal)

1. Disconnect the catalyst DP tubing from its connection above the outlet thermocouple.
2. Disconnect the wiring and conduit from the outlet thermocouple.
3. Disconnect the sample port not currently used that is to the right of the control panel.
4. Remove bolts from the transition upper flange.
5. Remove bolts from the transition lower flange.
6. Check that nothing is attached to the transition and carefully separate from the heat exchanger and the oxidizer and lift using the 1.5" ID pick rings provided.
7. Remove the catalyst module. Place in crate 1, and store in a clean dry area, for future use.
8. Install gaskets on both lower transition flanges. Reuse material if fit for use. New material (1/4" x 2.5" x cut to length), is provided in crate 1, with the catalyst module.
9. Align the spacer flange with the flange below so that all holes are centered.
10. Install a new gasket on the upper transition flange. The previous gasket may be reused if in good condition. New material (1/4" x 2.5" x cut to length), is provided in crate 1, with the catalyst module. If installing new material position all pieces so that they fit flush to one another and cover the entire face of the flange. Use the flange as a template and create holes for bolts using a tapered punch, by pushing the punch through the flange holes.
11. Carefully lower the transition into position so that flange holes are properly aligned.
12. Verify that all gaskets are in position.
13. Reuse flange bolts removed during disassembly and tighten the upper and lower transition flanges.
14. Reconnect the catalyst DP tubing to the outlet thermocouple DP connection.
15. Reconnect the outlet thermocouple electrical connections per the connection diagram on this sheet. Varify each connection by gently tugging on each wire when done.
16. Reattach the sample port plumbing disconnected earlier in this procedure.
17. Damper 1, is open allowing incoming process flow to enter the heat exchanger, then pass through to the combustion chamber.
18. Damper 2, is closed blocking process flow from entering the combustion chamber directly.
19. Temperature controls must be set per instructions in the O&M manual provided by Intellishare Environmental. Incorrect settings could adversely affect performance and could void manufacturer's warranty.

General Notes

1. Failure to follow installation instructions may void manufacturer's warranty.
2. Because of the size and weight of components, appropriate mechanical lift assistance is recommended.
3. Prior to performing any maintenance activities, varify that the unit is shut down using applicable lock out tag out procedures. Also verify that the unit has cooled to a safe temperature.

Information contained herein is the exclusive property of Intellishare Environmental, Inc. and is provided for information purposes only. Disclosure, copying, distribution or sharing with others is strictly prohibited unless authorized in writing by Intellishare Environmental, Inc.

INTELLISHARE ENVIRONMENTAL
CLEAN AIR SOLUTIONS

N-11-1198-Install

TITLE	Install - Mode Change Drawing N-11-1198
DRAWING NO.	N-11-1198-Install
SCALE	NTS
DRAWN	SAL 8/2/2006
CHECKED	
APPROVED	
LAST DRAWN BY	Admin 8/12/2011
CUSTOMER	XDD Solutia
	W.G. Krummerich Facility, Sauget, IL
REV.	-
SOURCE	
PAGE	4 OF 4
LAST PLOTTED BY	XXX DATE XXX

APPENDIX C

1,000 SCFM Thermal Oxidizer Construction Details

Oxidizer Process Information - Site 1 Benzene

▪ Design Air Flow Capacity:	1000 SCFM
▪ Minimum Air Flow:	500 SCFM
▪ Max Gas Pre-Heater Input: (Thermal Mode No Heat Exchanger)	3,200,000 BTUH
▪ Max Gas Pre-Heater Input: (Thermal Mode with Heat Exchanger)	1,600,000 BTUH
▪ Max Gas Pre-Heater Input: (Catalytic Mode with Heat Exchanger)	750,000 BTUH
▪ Minimum Thermal Operating Temperature:	1400 degrees F.
▪ Maximum Thermal Operating Temperature:	1550 degrees F.
▪ Minimum Catalyst Inlet Temperature:	550 degrees F.
▪ Average Catalyst Operating Temperature:	650 degrees F.
▪ Maximum Catalyst Operating Temperature:	1200 degrees F.
▪ Catalyst Volume:	6 cubic feet
▪ Catalyst Gas Hourly Space Velocity:	40,000 $GHSV^{-1}$
▪ Destruction Efficiency:	o 99% thermal o 98% catalytic
▪ Maximum LEL Throughput:	40% with LEL Sensor
▪ Time to Reach Operating Temperature:	30 minutes from cold start
▪ Natural Gas Flow Required:	3200 CFH
▪ Natural Gas Pressure Required:	5 psig working, 7 psig max
▪ Supply Voltage:	480/3/60

Oxidizer Process Information Site 2 Chlorobenzene

- Design Air Flow Capacity: 1000 SCFM
- Minimum Air Flow: 500 SCFM
- Max Gas Pre-Heater Input: 2,000,000 BTUH
(Thermal Mode with Heat Exchanger)
- Max Gas Pre-Heater Input: 1,000,000 BTUH
(Catalytic Mode with Heat Exchanger)
- Minimum Thermal Operating Temperature: 1500 degrees F.
- Maximum Thermal Operating Temperature: 1800 degrees F.
- Minimum Catalyst Inlet Temperature: 650 degrees F.
- Average Catalyst Operating Temperature: 900 degrees F.
- Maximum Catalyst Operating Temperature: 1025 degrees F.
- Catalyst Volume: 6 cubic feet
- Catalyst Gas Hourly Space Velocity: 9500 $GHSV^{-1}$
- Destruction Efficiency:
  - 99% thermal
  - 98% catalytic
- Maximum LEL Throughput: 15%
- Time to Reach Operating Temperature: 30 minutes from cold start
- Natural Gas Flow Required: 2000 CFH
- Natural Gas Pressure Required: 5 psig working, 7 psig max
- Supply Voltage: 480/3/60

Equipment Specification

Reactor: The reactor housing will be constructed of 7 gauge rolled steel. The reactor housing interior will be coated with a mastic liner for corrosion resistance. The reactor is sized to provide >1 second residence time. The Inlet and outlet connections are flanged. A 2" site glass is provided opposite end of the chamber as the burner for flame viewing. The reactor is mounted on a structural steel base frame suitable for forklift or crane lifting. A stainless steel self supporting stack is provided and will terminate at 20' AGL. The reactor outlet and stack are designed to provide explosion relief in the event of an explosion to limit the damage to the oxidizer and to reduce the risk of personnel injury due to a rapid expansion of gas associated with detonations and explosions within the reactor chamber.

High Temperature Refractory: All internal reactor surfaces are completely insulated with a ceramic module insulation media rated for 2200 deg F. The insulation is 8" x 8 lb density. A coating is applied to the insulation to increase the mechanical integrity and extend the life of the insulation. The insulation will provide <140 deg F cold face temperature in the presence of 5 mph wind.

Gas Pre-Heater: The unit will come equipped as standard with (1) direct gas fired primary air burner with combustion air blower. Burner shall be Maxon model Kinnemax 4", sized for 3.2 MMBTUH with 16:1 turndown. The burner will be fired on ratio utilizing a Maxon micro ratio control valve. Burner will be equipped with Honeywell Nema 4 Self Checking UV scanner and Honeywell Flame Safety Programmer.

Combustion Air Blower: The combustion air blower will be a New York pressure blower model 2104, Arr 4, direct drive, aluminum wheel and will be driven by a constant speed 5 hp TEFC motor operating on 480/3/60. The blower housing will be equipped with a drain, flanged inlet and outlet connections. The inlet will be fitted with a filter silencer.

Fuel Gas Piping Assembly: The fuel gas piping assembly is pre-piped and pre-wired. The gas train will meet all code requirements and is suitable for FM approval. All components are rated for outdoor operation and continuous use. All gas trains are pressure tested and painted safety yellow prior to shipment. Gas train is double block and bleed type. A Roots Model 5M175CTR natural gas flow meter will be shipped loose for field mounting and final connection.

Motor Control Center (MCC): The motor control center will be Nema 4X stainless steel construction and will contain all 480/3/60 control including the VFD for the oxidizer process blower. The MCC will have a lockable power disconnect. A 480/120 transformer will provide the control voltage to the MCP.

Main Control Panel (MCP): The main control panel shall be Nema 4X stainless steel construction and shall be pre-wired to all components. The control panel features all control, alarm detection and an hour meter to record run time via Allen Bradley operator interface terminal. Honeywell Temperature control will be provided with approved temperature control devices. The control panel shall be UL 508A labeled and listed as an assembly. The PLC is Allen Bradley. Burner management is Honeywell. All safety and customer designated interlocks are hardwired.

Flame Arrestor: A flame arrestor will be supplied and mounted to the inlet of the oxidizer and utilized to prevent flame propagation to the source. A spiral crimped aluminum element shall be removable for inspection and cleaning. A thermocouple will be placed on the exit face of the flame arrestor and wired to a temperature indicating controller with alarm set point located in the main control panel. A differential pressure gauge will be installed to measure the pressure drop of the FA element.

Process Blower: The oxidizer process blower is a centrifugal fan manufactured by New York Blower, Model 1908, Arr 8, Teflon shaft seal, stainless steel wheel, pedestal mount 10hp inverter duty motor operating on 480/3/60, which is utilized to overcome the resistance to flow through the oxidizer along with accomplishing the purge mode of the oxidizer. The blower will provide >2" w.c. negative pressure at the inlet of the blower. The blower will generate approx 25 degree F. temperature rise.

Automatic Purge/Dilution Control: A dilution control butterfly valve will be installed on the inlet of the process blower. The valve will be proved open to purge the oxidizer on fresh air prior to initiating light off. Once pre-heat temperature is reached the outlet temperature controller, included in the control cabinet, is wired to automatically modulate the electric actuator and control the dilution air valve when VOC concentrations exceed the temperature set-point.

Inlet Isolation Valve: An inlet isolation valve with proof of position switch will be placed on the inlet of the dilution Tee assembly. Proof of process closed is required prior to initiating the purge sequence.

Flow Measuring Devices: Flow measuring elements will be averaging pitot tube. Transmitters will provide differential pressure locally and corresponding 4-20ma output to the PLC for read outs in CFM on the OIT. Flow rate will be provided for the inlet feed process, & stack flow.

Temperature Measurement: Temperature measurement will be provided via RTD and thermocouple. Indicating temperatures will be provided for the heat exchanger T1, T2, T3 and T4. All temperatures will be viewable from the MCP.

Temperature Chart Recorder: The chart recorder is digital ABB and shall record the combustion chamber temperature. Once the catalyst module is inserted the catalyst outlet temperature is displayed. The temperature recorder is mounted in the MCP. The chart recorder has an SD card suitable for removal and downloading data to a PC.

Heat Exchange Module: The oxidizer can be furnished with an externally mounted nominal 50-60% thermally efficient tube and shell heat exchanger. The heat exchanger can be utilized in either thermal or catalytic mode. The heat exchange flow pattern is counter cross flow. The heat

exchanger is fabricated from 309 & 316 stainless steel with an internal expansion joint and internal insulation with a 304 stainless steel case and flanges. Inspection ports are available to inspect both sides of the tube to header sides of the heat exchanger.

Heat Exchange By-Pass Module: The heat exchange by-pass allows the air flow to by-pass the cold and hot side of the heat exchanger and vent directly to the exhaust stack. This will enable higher VOC through put.

LEL Alarm Sensor: The LEL alarm sensor will be duct mount, which permits operation of the system at >25% LEL. The LEL alarm will shut down the oxidizer in the event 40% LEL is reached. The alarm sensor will be factory calibrated to benzene.

Catalyst Module: The oxidizer can be furnished with a monolith catalyst, specifically designed for the destruction of petroleum and halo hydrocarbons. The catalyst module is easily field inserted with minimal requirements. The catalyst module will be crated and shipped loose for storage and future use.

Air Sparge Nozzle & Blower: To extend the life of the heat exchanger under high temperature an air sparge nozzle will be used to inject cooling air prior to the hot face of the heat exchanger. This lowers heat exchanger efficiency, average HX ho face temperature, and final exhaust temperature. A modulating valve and actuator are provided to allow 4 to 20 mA control of the sparge flow based on the thermocouple temperature immediately prior to the heat exchanger The sparge air blower will be a New York pressure blower model 1703, Arr 4, direct drive, aluminum wheel and will be driven by a constant speed 3 hp TEFC motor operating on 480/3/60. The blower housing will be equipped with a drain, flanged inlet and outlet connections. The inlet will be fitted with a filter silencer.

N-11-1198 Master Purchased Components Bill of Material

Solutia – Sauget IL

P&ID	Qty	P/N	Title	Detail	Cut Sheet
	1		BURNER		
Burner	1	KINEMAX 6" G	MAXON KINEMAX, 6" SERIES G	NATURAL GAS, 6,000,000 BTUH	Maxon Kinemax
IT-1	1	AO6SA6X	TRANSFORMER, IGNITION	120/6000V, #12178 EPOXY FILLED	Dongan A06SA6X
S/G	1	120054	PEEPSIGHT, 2/3 PIPE UNION, 2" NPT	ECLIPSE	N/A
IT-1	2	I1-02-2046	BOOT, PROTECTOR	#02-2046	N/A
IT-1	1	I1-SSN	TERMINAL, SPRING SNAP	#021958	N/A
IT-1	1	I1-RSN	TERMINAL, RING	HIGH VOLTAGE	N/A
IT-1	10	I1-734803	WIRE, IGNITION	STANDARD BLACK	N/A
	1		HEAT EXHANGER		
HX-1	1	CUSTOM HX	TUBE & SHELL 2000 CFM	NOMINAL 50-60% efficient, 309 ss internals, internally insulated, 304 ss casing	N/A
Damp-1&2	2	FNW731B12	BUTTERFLY VALVE, 12" WAFER	CI BODY, SS. DISC	FNW 731 Butterfly Valve
	1	SB10A10A12000140	FLEX HOSE SS. 150# FLANGES	12" DIA., 14" OAL	N/A
	1		FAN/FAN ASSEMBLY		
M1	1	NYB-1910-20HP -	BLOWER, PRESSURE, NYB SIZE 1910, AL WHEEL, ARR 8	20 HP, 3600 RPM, TE, 254T 3-60-230/460 V	NYB PB IM, NYB PB
M2	1	NYB-2206-10HP	BLOWER, PRESSURE, NYB SIZE 2206, AL WHEEL, ARR 4	10 HP, 3500 RPM, TE, 215T, 3-60-230/460V	NYB PB IM, NYB PB
Dilution Filter	1	F72-8	FILTER, AIR INTAKE & FILTER SILENCER, 8"	8" FLANGE CONNECTION, FOAM ELEMENT	Stoddard F72 Series
M2 Filter	1	F72-6	FILTER, AIR INTAKE & FILTER SILENCER, 10"	6" FLANGE CONNECTION, FOAM ELEMENT	Stoddard F72 Series
PDI-1 PDI-2	2	A40-108	FILTER SERVICE INDICATOR	STODDARD	NA
M6 valve	1	8BWM-1153-N	VALVE, BUTTERFLY, 8", ANGLE SEAT	VALV-TECH, BARE STEM	Valv-tech BL-BW

M5 Valve	1	10BWM-1153-N	VALVE, BUTTERFLY, 10”, ANGLE SEAT	VALV-TECH, BARE STEM, W/KEYWAY	Valv-tech BL-BW
	1		FUEL TRAIN		
PI-2	1	J7840P	GAUGE, LOW PRESSURE DIAPHRAGM, 0-15 PSIG	2.5 FACE, 1/4" LOWER MOUNT, LIQUID FILLED	Marsh Severe Service Gauge
PI-3	1	G22704	GAUGE, LOW PRESSURE DIAPHRAGM, 0-30" WC	2.5 FACE, 1/4" LOWER MOUNT, FLUTTER GUARD	Ashcroft Pressure Gauge 1490
Main Gas	2	701-1065	VALVE, BALL, 2” NPT	JOMAR FULL PORT BRASS	Jomar T-100
Pilot Gas	2	701-1040	VALVE, BALL, ½” NPT	JOMAR FULL PORT BRASS	Jomar T-100
Primary & Sec	2	D230475	PRESSURE REGULATORS, FRI 712/6	KARL DUNGS	Dungs Pressure Reg FRI-6
S1-S2	1	230-793 VP	DMV-D 703/622 DUAL MODULAR VALVE w/VENT VALVE ADAPT, 1-2" BODY SIZE, 120VAC	7 PSI, FAST OPEN/CLOSE, ADJ MAX FLOW, PROOF OF CLOSURE ON VALVE 2	Dungs DMVD Multivalve
S1-S2	2	D225047	ADAPTER ACCESSORIES, 1/4" NPT	FOR DMV & FRI - KDI FUEL TRAINS	N/A
ZI-2	1	46000-6	VISUAL INDICATOR FOR DMV	DUNGS FUEL TRAIN VALVE ASSEMBLY	N/A
PSH-1	1	46015-8	SWITCH, HIGH GAS PRESSURE, 40-200" WC, DIAL ADJ, MANUAL RESET	1/4" NPT PIPE MOUNT, NEMA4, UL/CSA/FM, GMH-A4-4-8, DUNGS FUEL TRAIN VALVE ASSY	Dungs Pressure Switch GAO, GMH
PSL-1	1	46016-8	SWITCH, LOW GAS PRESSURE, 40-200" WC, MANUAL RESET	1/4" NPT PIPE MOUNT, NEMA4, UL/CSA/FM, GML-A4-4-8 , DUNGS FUEL TRAIN VALVE ASSY	Dungs Pressure Switch GAO, GMH

S1-S2	1	D214975	ADAPTOR, FOR SIDE MT HIGH GAS SW ON DMV	DUNGS FUEL TRAIN VALVE ASSY, GAO, GML GMH A2	N/A
S1-S2	2	D219008	TEST NIPPLE	ACCESSORIES, G 1/8 FOR DMV	N/A
Primary Sec	2	D2221997	FLANGE 2" NPT, DMV 703	DUNGS FUEL TRAIN VALVE ASSY	N/A
S1-S2	1	D229846	SPRING #5, RED, 10 TO 22" WC	FOR FRI 710 & 712 PRESSURE REGULATORS	N/A
S1-S2	1	D229847	SPRING #6, YELLOW, 12-28” W.C.	FOR FRI 710 & 712 PRESSURE REGULATORS	N/A
S1-S2	1	D229849	SPRING #8, PINK, 40-60” W.C.	FOR FRI 710 & 712 PRESSURE REGULATORS	N/A
M3	1	100099	KIT, ACTUATOR MOUNTING, 0.5-4", V2	FOR ECLIPSE/DUNGS FUEL SYSTEMS	N/A
S3-S4	2	8214G20	VALVE, SOLENOID, ASCO, 1/2"	NORMALLY CLOSED, 120V, W/18" NPT TAPS	Asco Series 8214 V6676R5
S5	1	8214G023	VALVE SOLENOID, ASCO, ½” NPT, GAS VENT	ALUM BODY, NORMALLY OPEN, 120 VAC	ASCO 8214 V6675R3
S6	1	8214G054	VALVE SOLENOID, ASCO, 1” NPT, GAS VENT	ALUM BODY, NORMALLY OPEN, 120 VAC	ASCO 8124 V7466R2 & Sec (2)
Pilot - Primary	1	M1-325-3-1/2	REGULATOR, 1/2", NO LIMITER	PILOT GAS PRESSURE	Maxitrol MI2010, MS2055
Pilot - Primary	1	211-1125	SPRING, RED, 10-22” W.C.	FOR M1-325 PILOT REGULATOR	N/A
Main Gas	1	011-2035K	Y-STRAINER 2" NPT	100 MESH SS SCREEN	Mueller CI y-Strainer

Pilot	1	VA-3018	GAS COCK, 1/2", ADJUSTABLE		N/A
FI-3	1	5M175CTR	METER, ROOTS GAS, MECHANICAL TOTALIZER	FLANGED CONNECTION	Roots Meter B3_5M175
	Qty	P/N	Title	Detail	Cut Sheet
	1	N-07-0531-009	CONTROLS		
M3-M6 ZSL-3 ZSH-6	2	M7284C-1000	ACTUATOR, HONEYWELL 120V, 4-20 mA INPUT W/AUX SWITCH	MODUTROL SERIES 72, 150 IN/LB ADJ STROKE	HW Series 72 Mod Motors
M6	1	Y20DAA-KIT-2	LINKAGE ASSEMBLY, VALLEY	FOR HONEYWELL DILUTION VALVE ACTUATOR	N/A
UV	1	C7061A1012	SCANNER, UV FLAME DETECTOR, SELF-CHECKING	HONEYWELL PURPLE PEEPER	HW C7061AUV Scanner
PDSH-2	1	46020-5	SWITCH, AIR PRESSURE, 2-20" WC	1/4" NPT, NEMA4, DIAL ADJ, UL/CSA/FM, AA-A2-6-5, DUNGS	Dungs Air Pressure AA A2
PDSL-1 PDSL-2	2	46020-3	SWITCH AIR PRESSURE, .4-4" WC	1/4" NPT, AA-A2-6-3, DUNGS	Dungs Air Pressure AA A2
			CATALYST		
Cat	2	204803	CATALYST, 22-1/4"x 23-1/4", 3.5" DEPTH, 400CPSI	WHOLE BLOCK, NANO HYPERCAT ACP	N/A
Cat	2	204804	CATALYST, 11.13"x 23-1/4", 3.5" DEPTH, 400CPSI	HALF BLOCK, NANO, HYPERCAT ACP	N/A
Cat	2	TEST COUPON	TEST CORE, VOC, 200 CPSI	ATTACHED TO CATALYST	NA
			FLAME ARRESTOR		
Flame Arrestor	1	80019959	ARRESTOR, FLAME ELEMENT BANK 8"	GROTH, 6061 SCH 805 AL PIPE, 16" DIA	Groth FA 7618-7628

			INSTRUMENTATION		
TE-1,A,B TE-2,A,B	2	KKK48U-027-00-8HN34	THERMOCOUPLE, TRIPLE	TYPE K, 27", PYROMATION	Pyromation Brochure & Tech
TE-3,TE-4 & TE-5	3	KKK48U-0??-00-8HN34	THERMOCOUPLE	TYPE K, ??", PYROMATION	Pyromation Brochure & Tech
FE-2	1	VF-2-BV	FLOWMETER, VISI-FLOAT 0.2-2 SCFH	DWYER	Dwyer Visifloat Series VF
FE-1	1	DS300-10-LV	FLOW SENSOR, 10”, LESS VALVES	DWYER	Dwyer Flow Sensor DS-300
FIT-1	1	IDP10-A22A01F-M1L1 0-3"WC	TRANSMITTER, DIFF. PRESS, FOXBORO, IDP10 4-20 mA OUTPUT, 316SS	CALBRATED 0-2” W.C., FM EXP CLASS I, DIV 1, GROUPS B, C, & D.	Foxboro IDP10 Data, O&M
FE-3		23L0300B-XX-XX-04	PITOT TUBE, SELF AVERAGING, 1” DIA. SS.	23L MIRIAM ACCUTUBE	Miriam Accutube
FIT-3	1	IDP10-A22A01F-M1L1 0-1"WC	TRANSMITTER, DIFF. PRESS, FOXBORO, IDP10 4-20 mA OUTPUT, 316SS	CALBRATED 0-1” W.C., FM EXP CLASS I, DIV 1, GROUPS B, C, & D.	Foxboro IDP10 Data, O&M
PDI-3	1	MAG 2010	GAUGE, MAGNEHELIC 0-10”WC	DWYER	Dwyer Mag Gauge 2000 Ser
AIT-1 AE-1	1	ULTIMA X-E39E1D33000000C	LEL MONITOR, IR, W/LCD DISPLAY	316 SS ENCLOSURE	Ultima X Series O&M, IR LEL

MCC PANEL WIRING

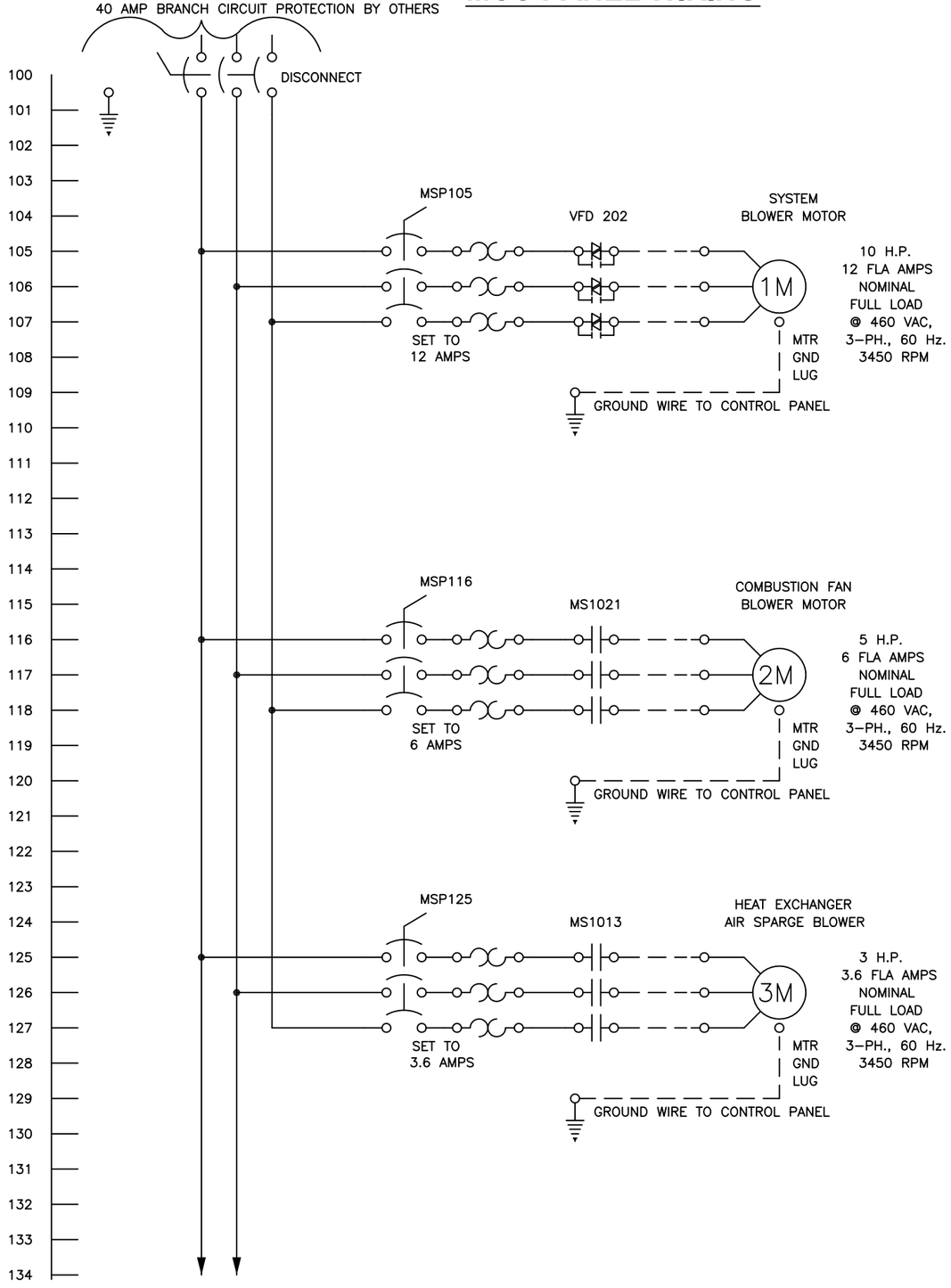

MCC PANEL WIRING

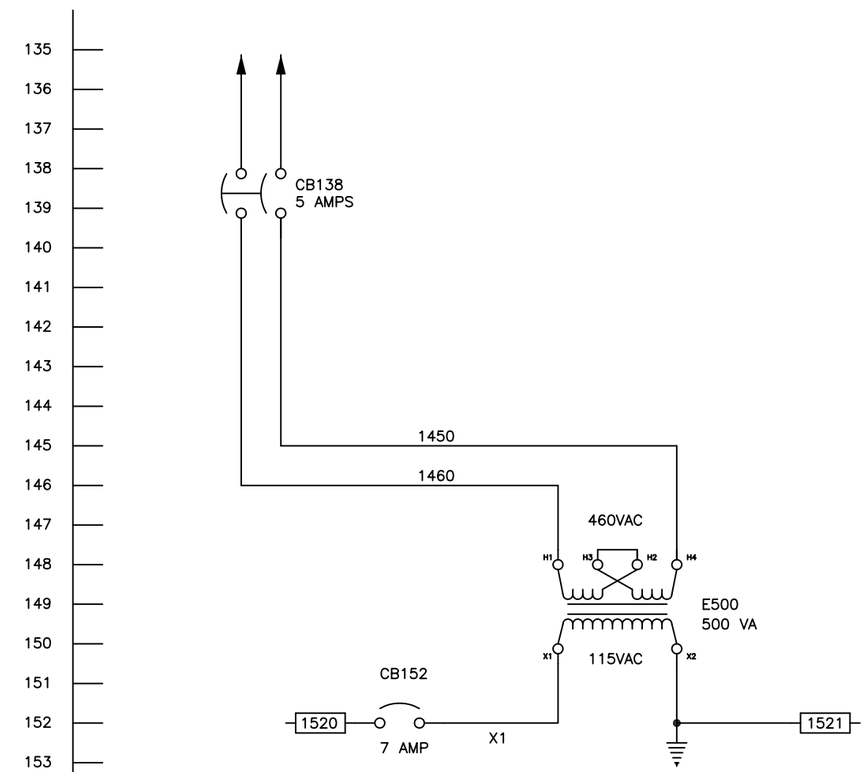

REV	BY	DATE	CHANGE
1	BPH	9/2/11	Submittal

INTELLISHARE ENVIRONMENTAL
CLEAN AIR SOLUTIONS

PROJECT ID

TITLE
ELECTRICAL SCHEMATIC
CT01000

DRAWING NO. N-11-1199-401

SCALE NONE

DRAWN EAM DATE 8/7/11
CHECKED DATE
APPROVED DATE
LAST DRAWN BY EAM DATE 8/7/11

CUSTOMER
Solutia
W.G. Krummerich Facility
Sauget, IL

KF NUMBER 11291

PAGE 1 OF 1

LAST PLOTTED BY EAM DATE 8/7/11

MCC PANEL WIRING

MCC PANEL WIRING

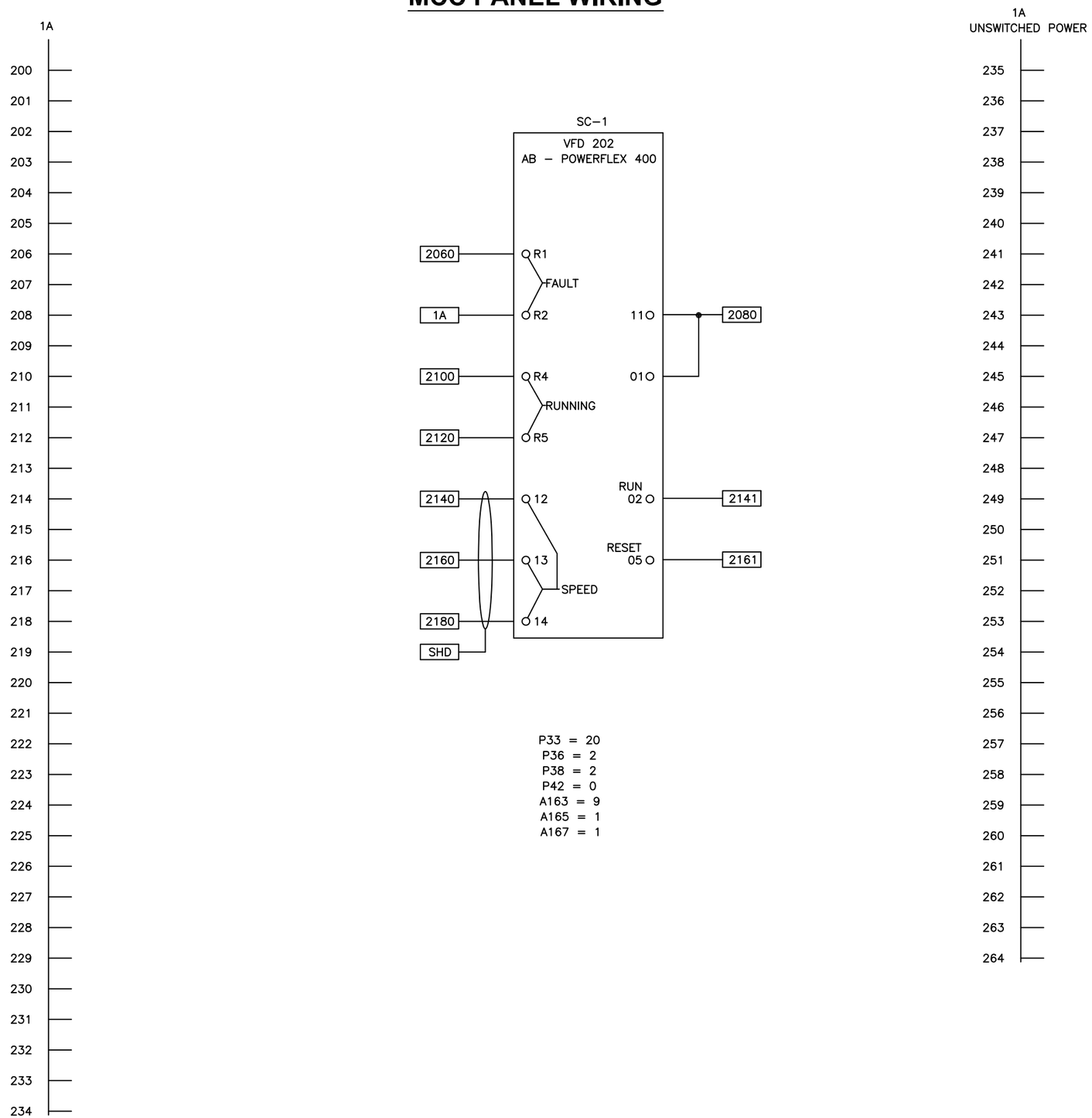

REV	BY	DATE	CHANGE
1	BPH	9/2/11	Submittal

INTELLISHARE ENVIRONMENTAL
CLEAN AIR SOLUTIONS

PROJECT ID

TITLE
ELECTRICAL SCHEMATIC
CT01000

DRAWING NO. N–11–1199 –402

SCALE NONE

DRAWN EAM DATE 8/7/11
CHECKED DATE
APPROVED DATE
LAST DRAWN BY EAM DATE 8/7/11

CUSTOMER
Solutia
W.G. Krummerich Facility
Sauget, IL

KF NUMBER 11291
PAGE 1 OF 1

LAST PLOTTED BY EAM DATE 8/7/11

MCP PANEL WIRING

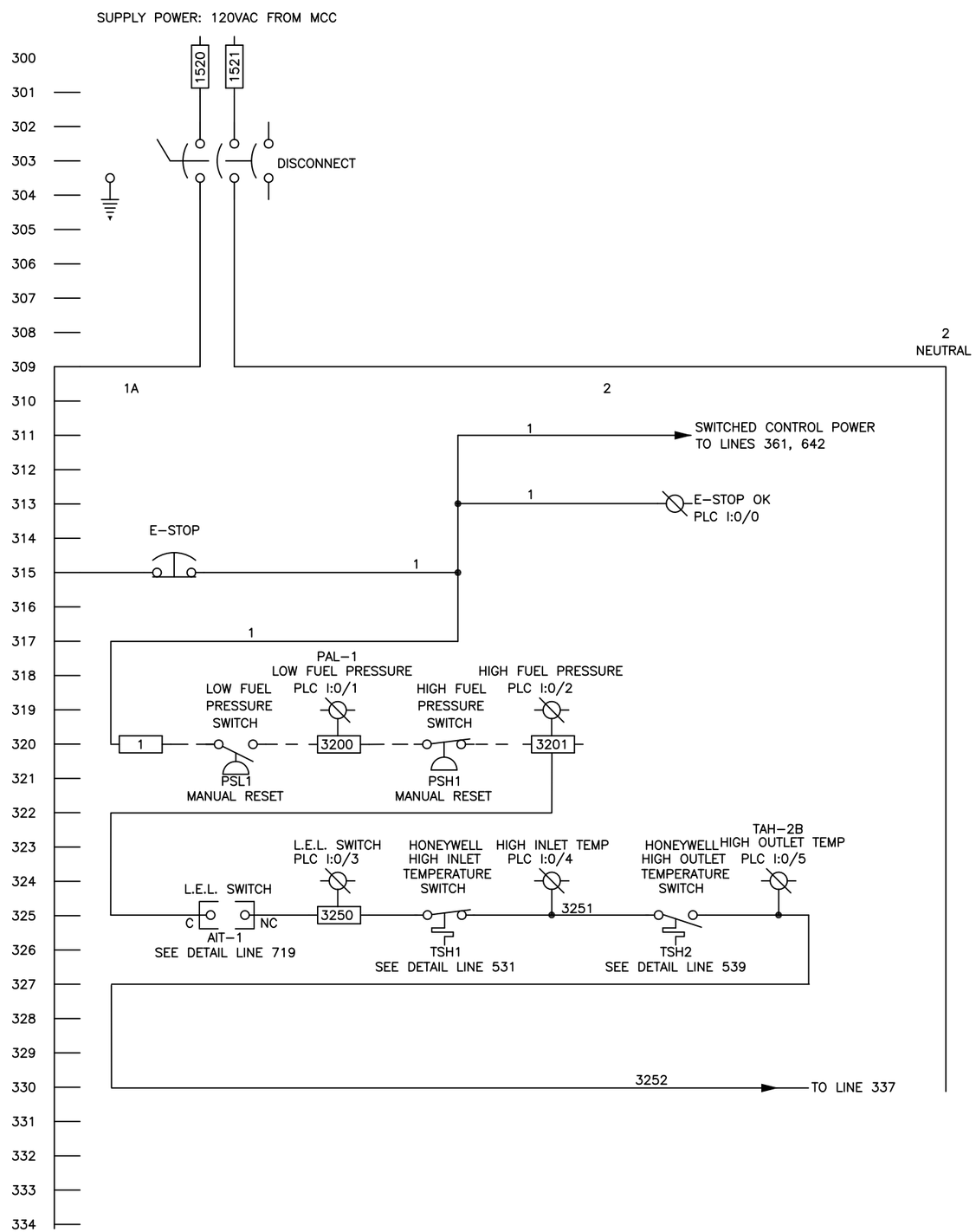

MCP PANEL WIRING

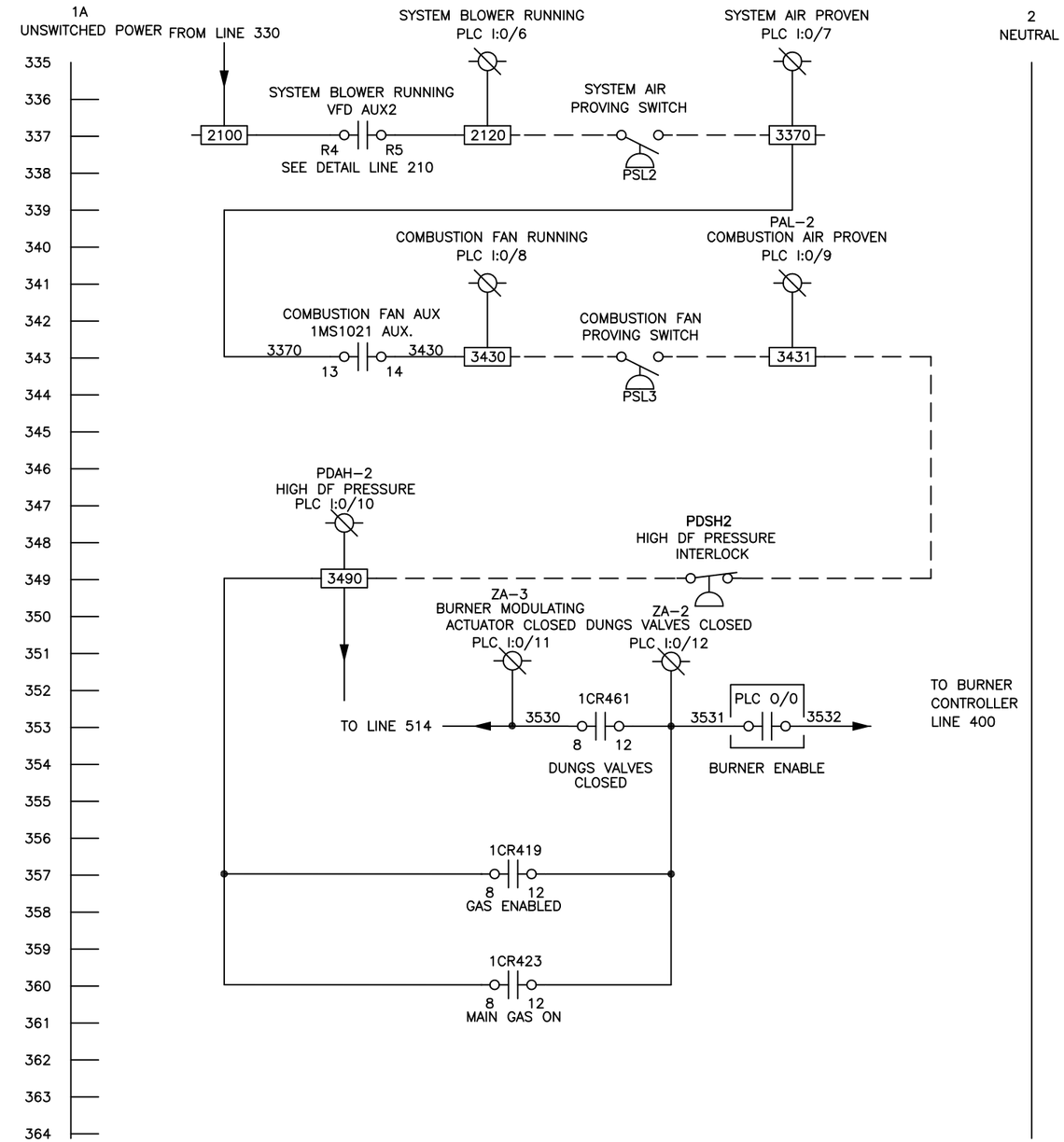

REV	BY	DATE	CHANGE
1	BPH	9/2/11	Submittal

INTELLISHARE ENVIRONMENTAL
CLEAN AIR SOLUTIONS

PROJECT ID

TITLE
ELECTRICAL SCHEMATIC
CT01000

DRAWING NO. N-11-1199-403

SCALE NONE

DRAWN EAM DATE 8/7/11
CHECKED DATE
APPROVED DATE

CUSTOMER
Solutia
W.G. Krummerich Facility
Sauget, IL

LAST DRAWN BY EAM DATE 8/7/11
KF NUMBER 11291
PAGE 1 OF 1

LAST PLOTTED BY EAM DATE 8/7/11

MCP PANEL WIRING

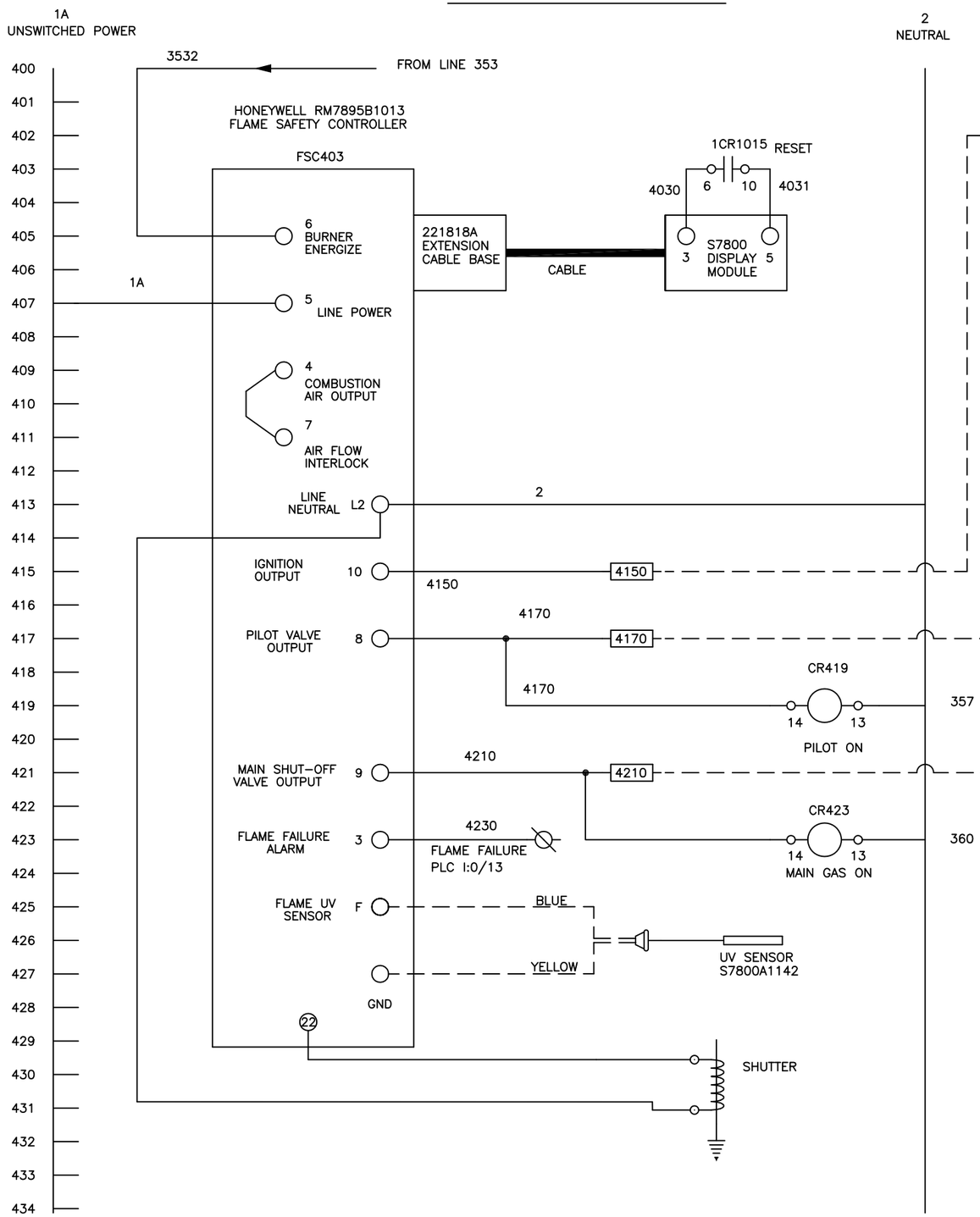

MCP PANEL WIRING

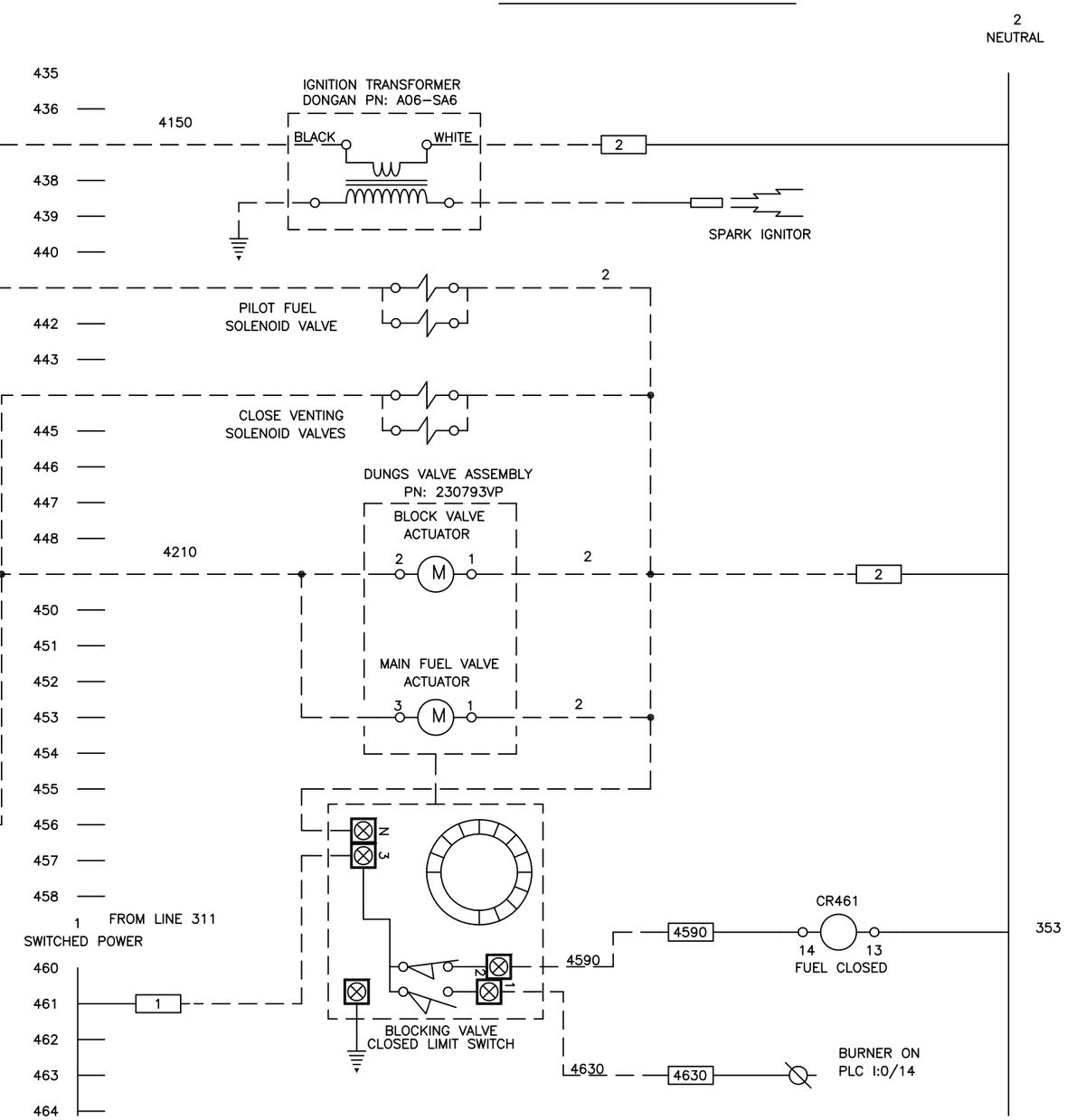

REV	BY	DATE	CHANGE
1	BPH	9/2/11	Submittal

INTELLISHARE ENVIRONMENTAL
CLEAN AIR SOLUTIONS

PROJECT ID

TITLE
ELECTRICAL SCHEMATIC
CT01000

DRAWING NO. N-11-1199-404

SCALE NONE

DRAWN EAM DATE 8/7/11
CHECKED DATE
APPROVED DATE
LAST DRAWN BY EAM DATE 8/7/11

CUSTOMER
Solutia
W.G. Krummerich Facility
Sauget, IL

KF NUMBER 11291

PAGE 1 OF 1

LAST PLOTTED BY EAM DATE 8/7/11

MCP PANEL WIRING

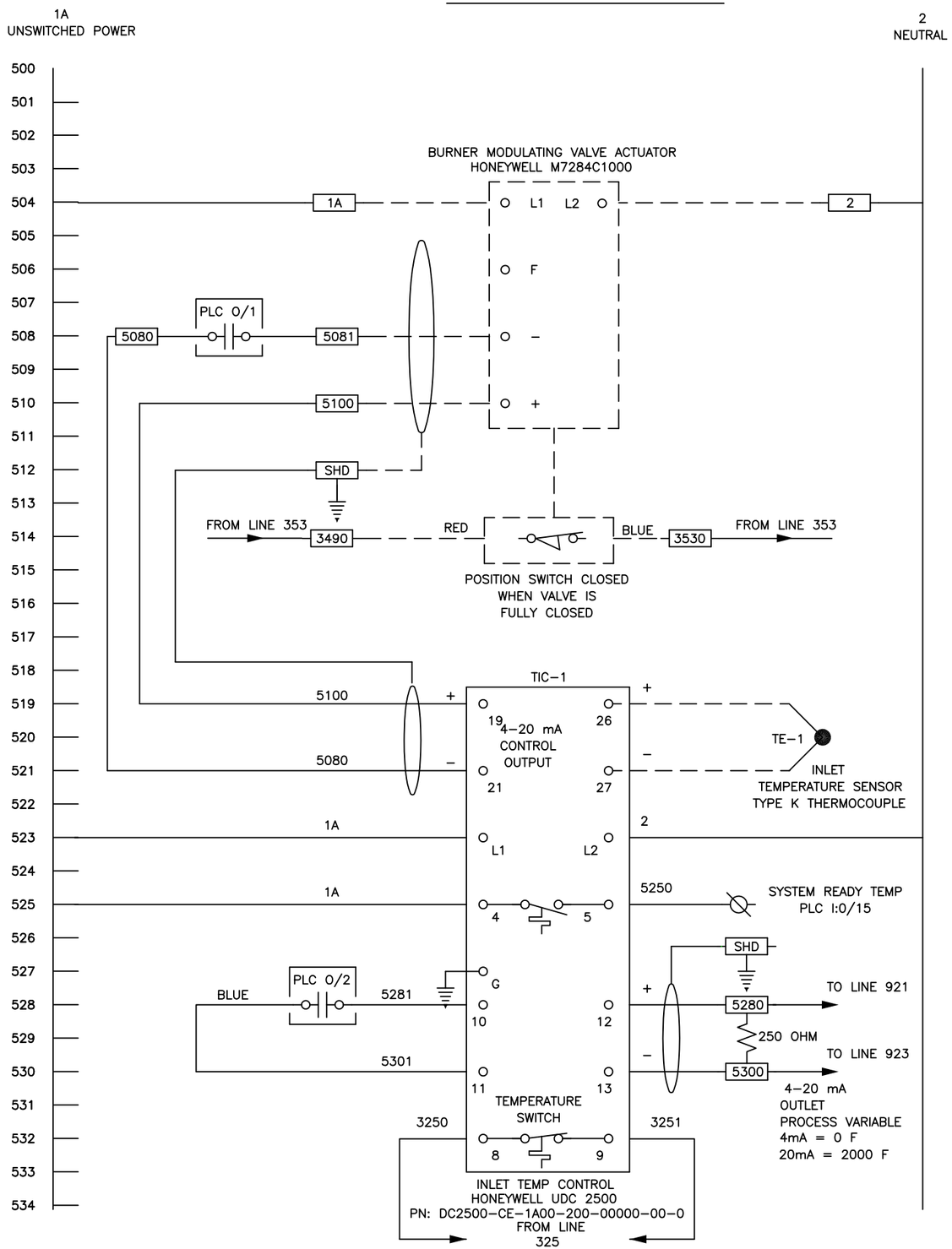

MCP PANEL WIRING

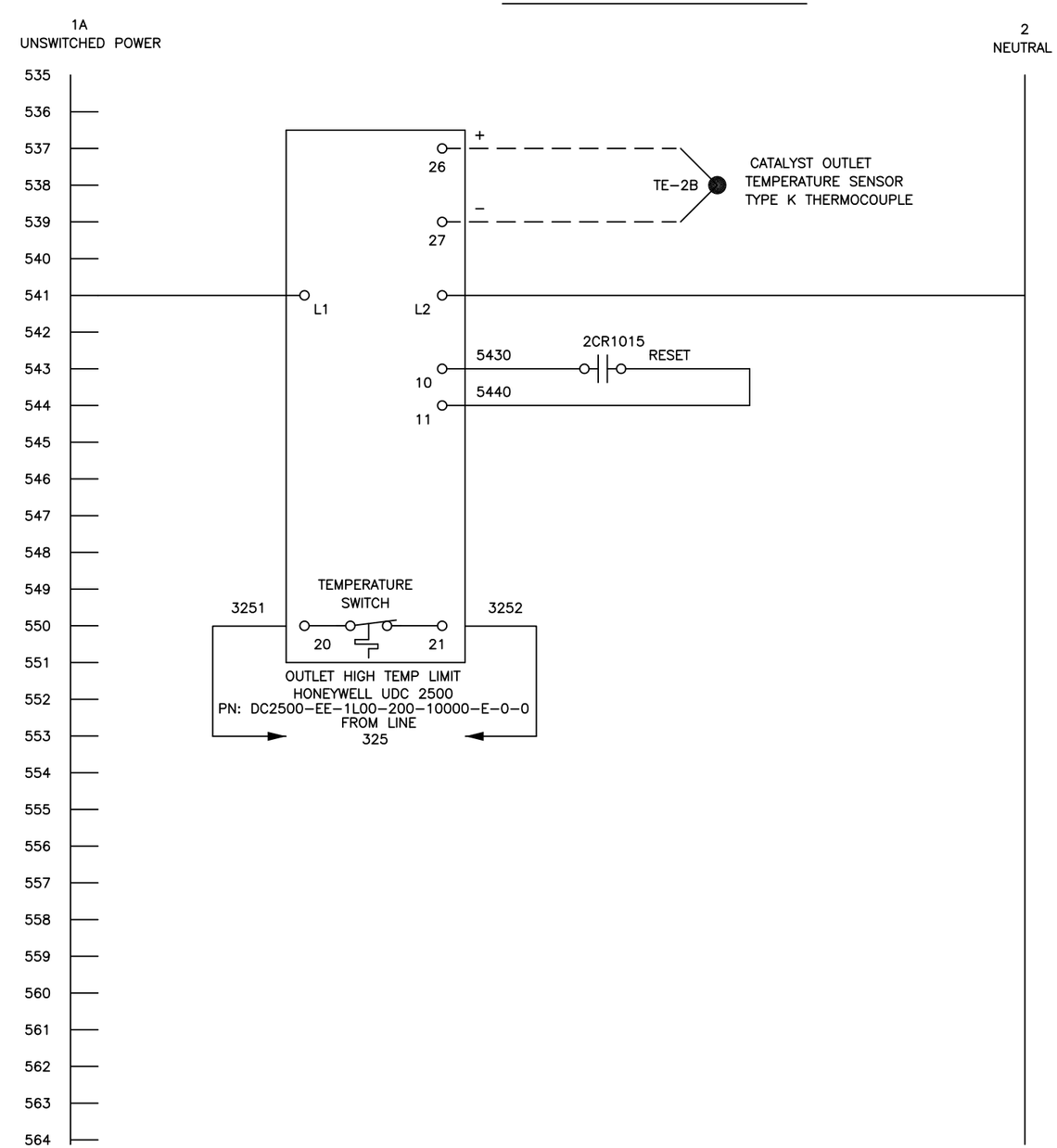

REV	BY	DATE	CHANGE
1	BPH	9/2/11	Submittal

INTELLISHARE ENVIRONMENTAL
CLEAN AIR SOLUTIONS

PROJECT ID

TITLE
ELECTRICAL SCHEMATIC
CTO1000

DRAWING NO. N–11–1199 –405

SCALE NONE

DRAWN EAM DATE 8/7/11
CHECKED DATE
APPROVED DATE
LAST DRAWN BY EAM DATE 8/7/11

CUSTOMER
Solutia
W.G. Krummerich Facility
Sauget, IL

KF NUMBER 11291

PAGE 1 OF 1

LAST PLOTTED BY EAM DATE 8/7/11

MCP PANEL WIRING

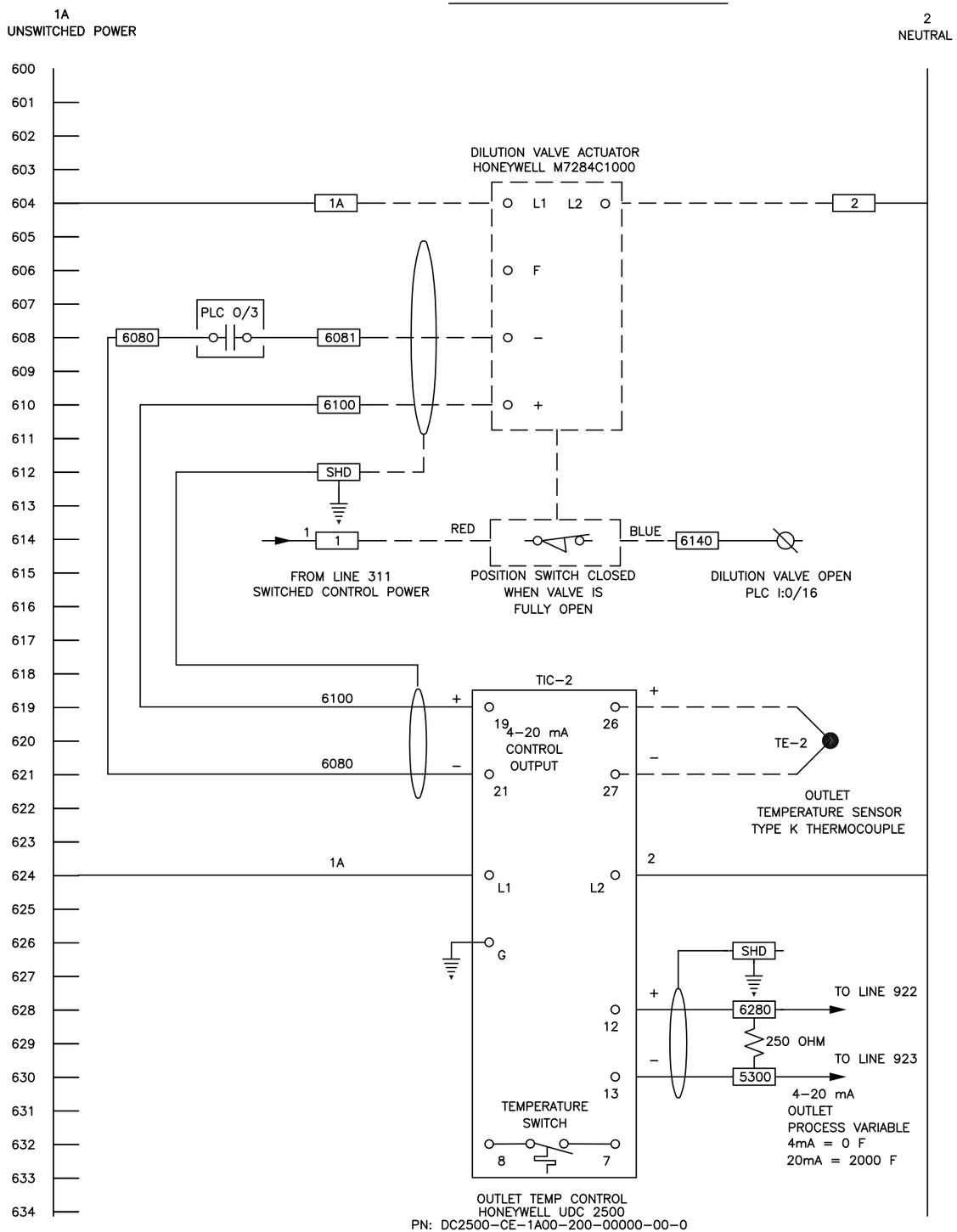

MCP PANEL WIRING

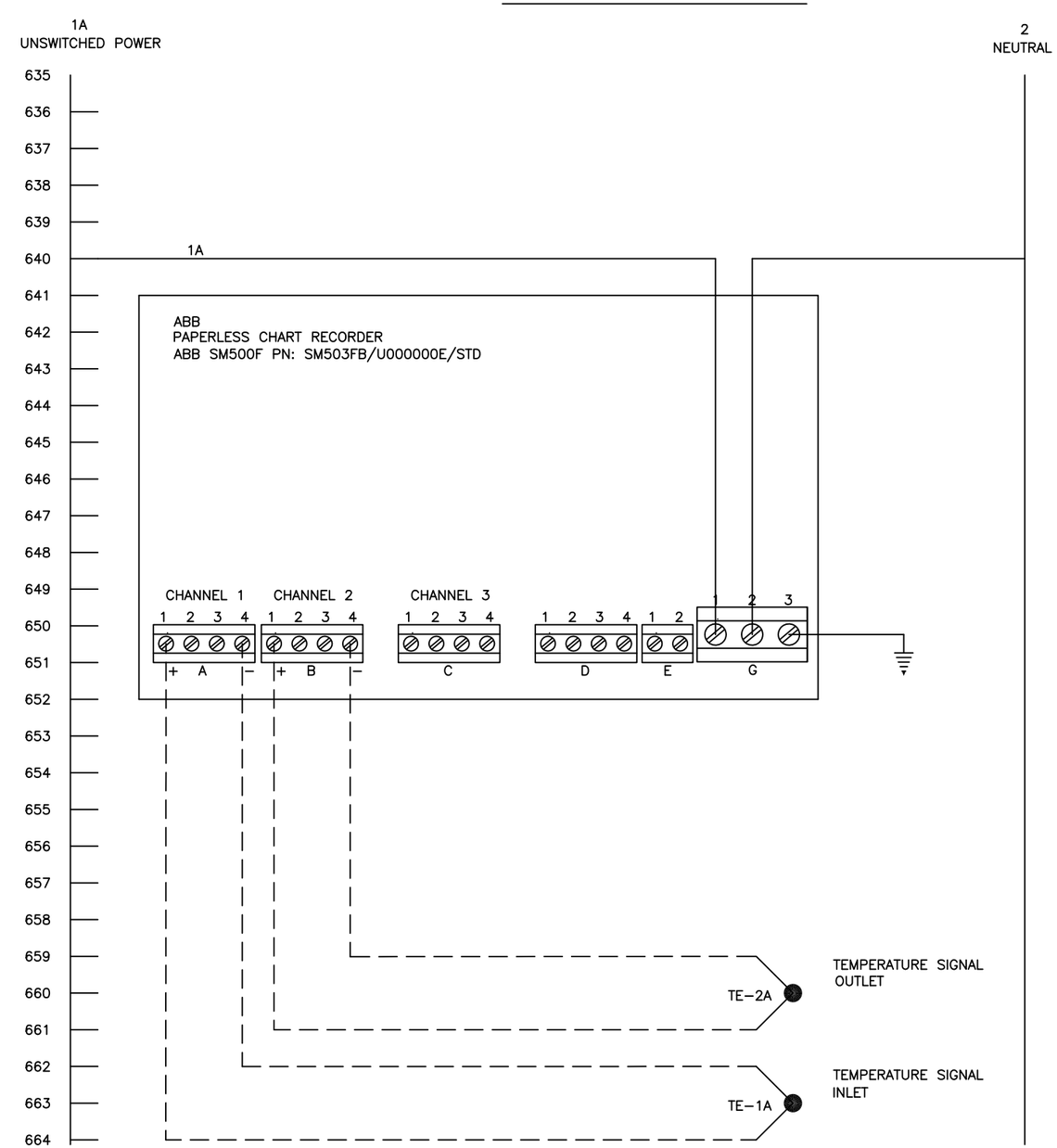

REV	BY	DATE	CHANGE
1	BPH	9/2/11	Submittal

INTELLISHARE ENVIRONMENTAL
CLEAN AIR SOLUTIONS

PROJECT ID

TITLE
ELECTRICAL SCHEMATIC
CTO1000

DRAWING NO. N–11–1199 –406

SCALE NONE

DRAWN EAM DATE 8/7/11
CHECKED DATE
APPROVED DATE
LAST DRAWN BY EAM DATE 8/7/11

CUSTOMER
Solutia
W.G. Krummerich Facility
Sauget, IL

KF NUMBER 11291

PAGE 1 OF 1

LAST PLOTTED BY EAM DATE 8/7/11

MCP PANEL WIRING

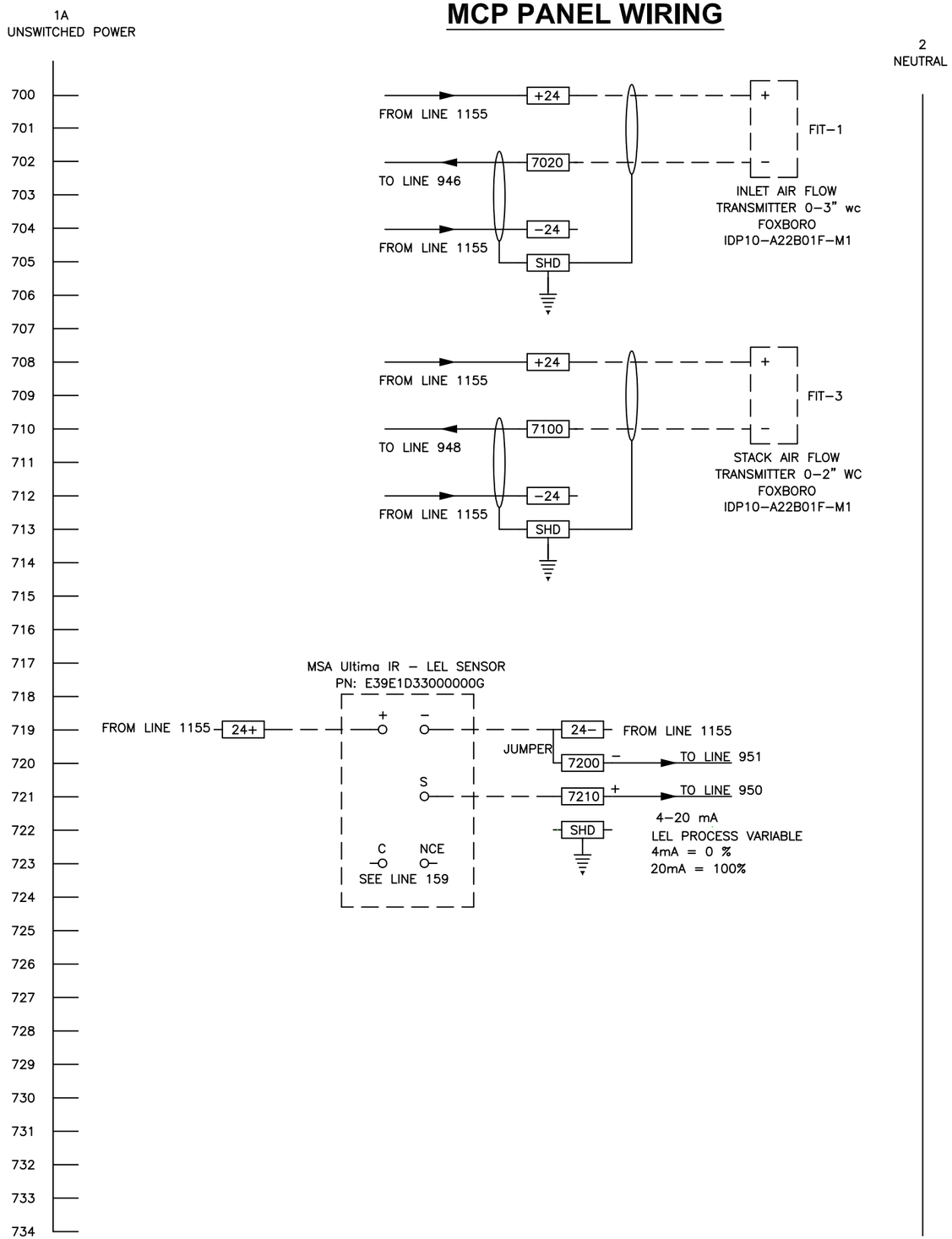

MCP PANEL WIRING

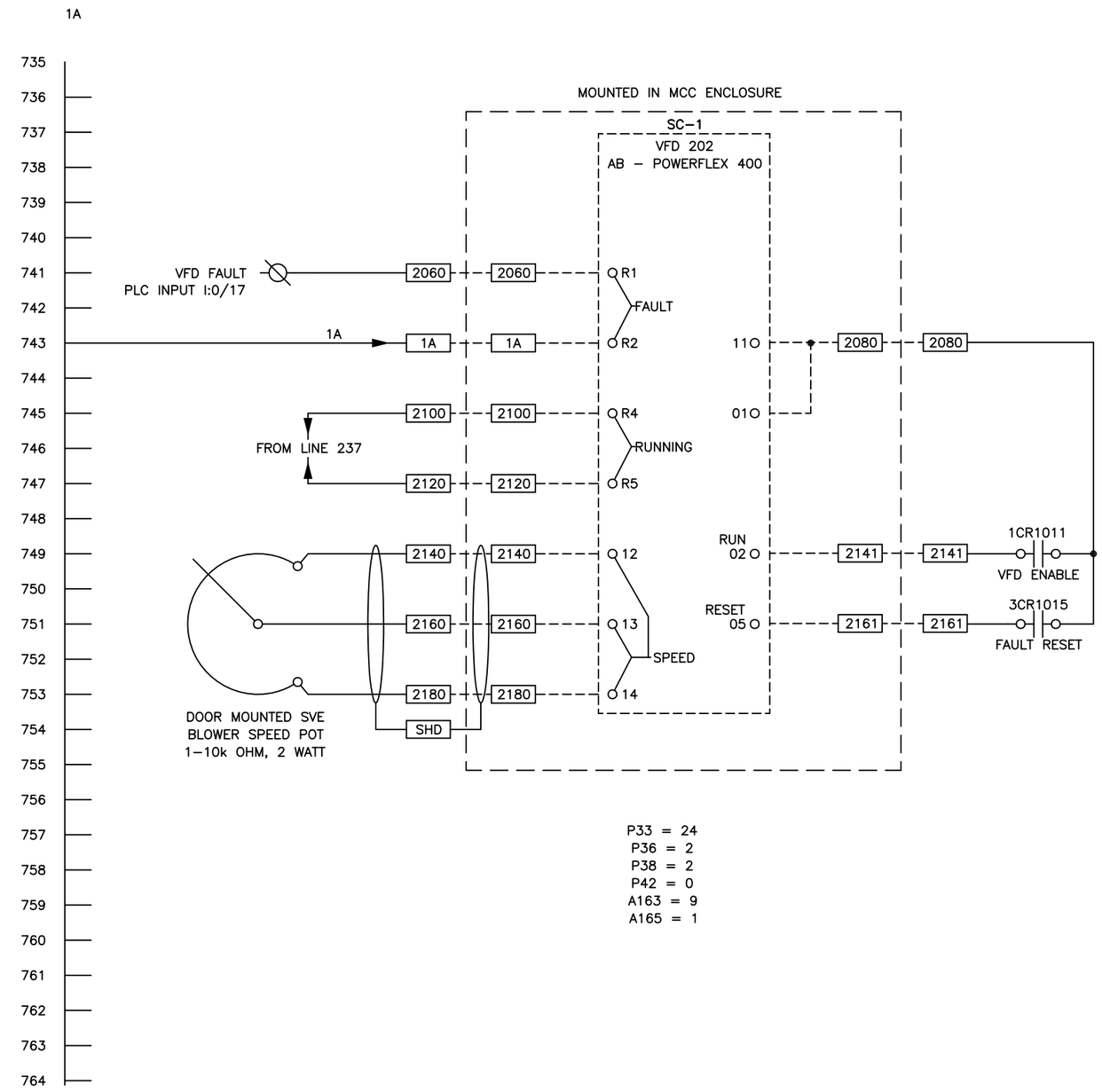

REV	BY	DATE	CHANGE
1	BPH	9/2/11	Submittal

INTELLISHARE ENVIRONMENTAL
CLEAN AIR SOLUTIONS

PROJECT ID

TITLE
ELECTRICAL SCHEMATIC
CT01000

DRAWING NO. N−11−1199 −407

SCALE NONE

DRAWN EAM DATE 8/7/11
CHECKED DATE
APPROVED DATE
LAST DRAWN BY EAM DATE 8/7/11

CUSTOMER
Solutia
W.G. Krummerich Facility
Sauget, IL

KF NUMBER 11291

PAGE 1 OF 1

LAST PLOTTED BY EAM DATE 8/7/11

MCP PANEL WIRING

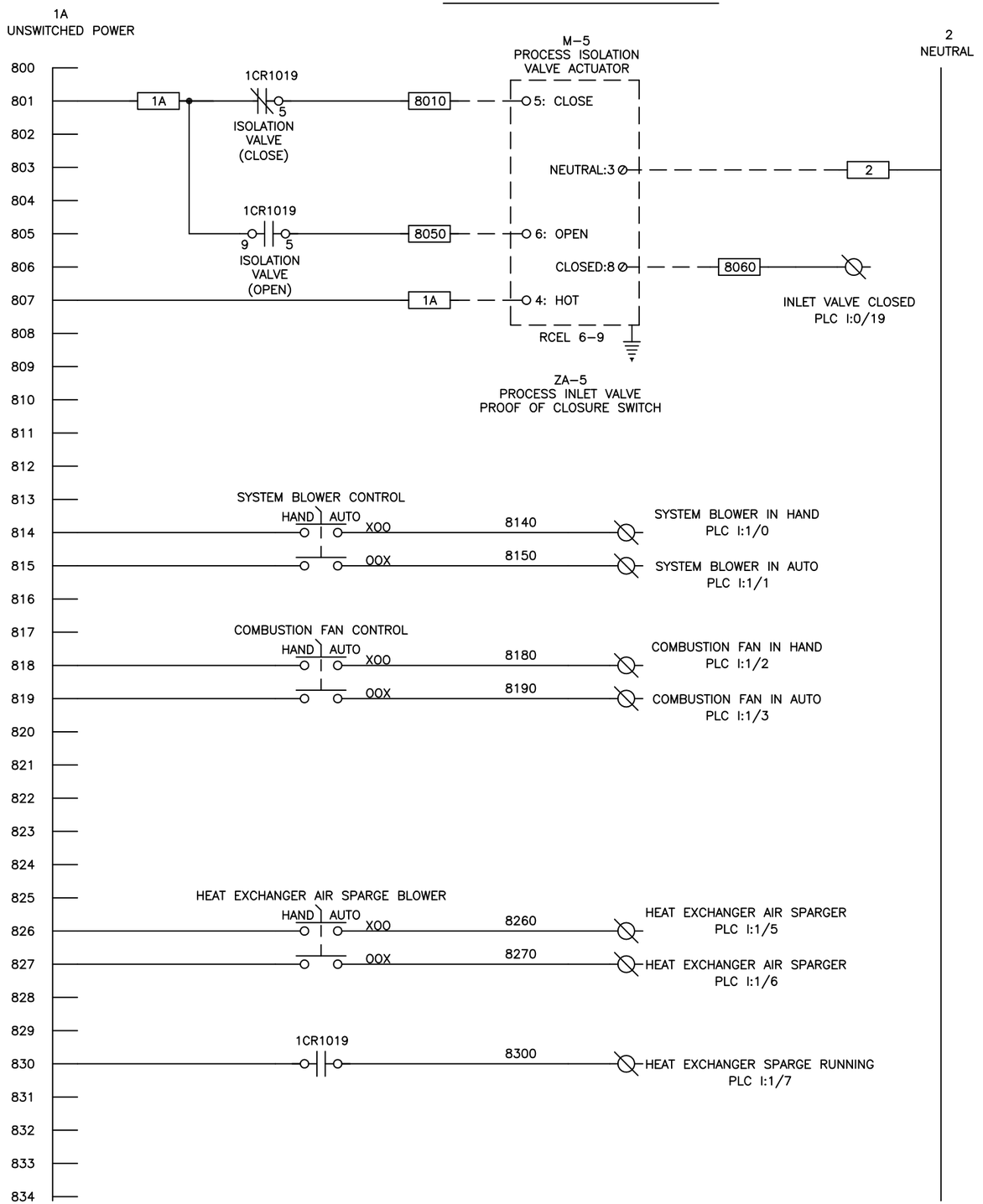

MCP PANEL WIRING

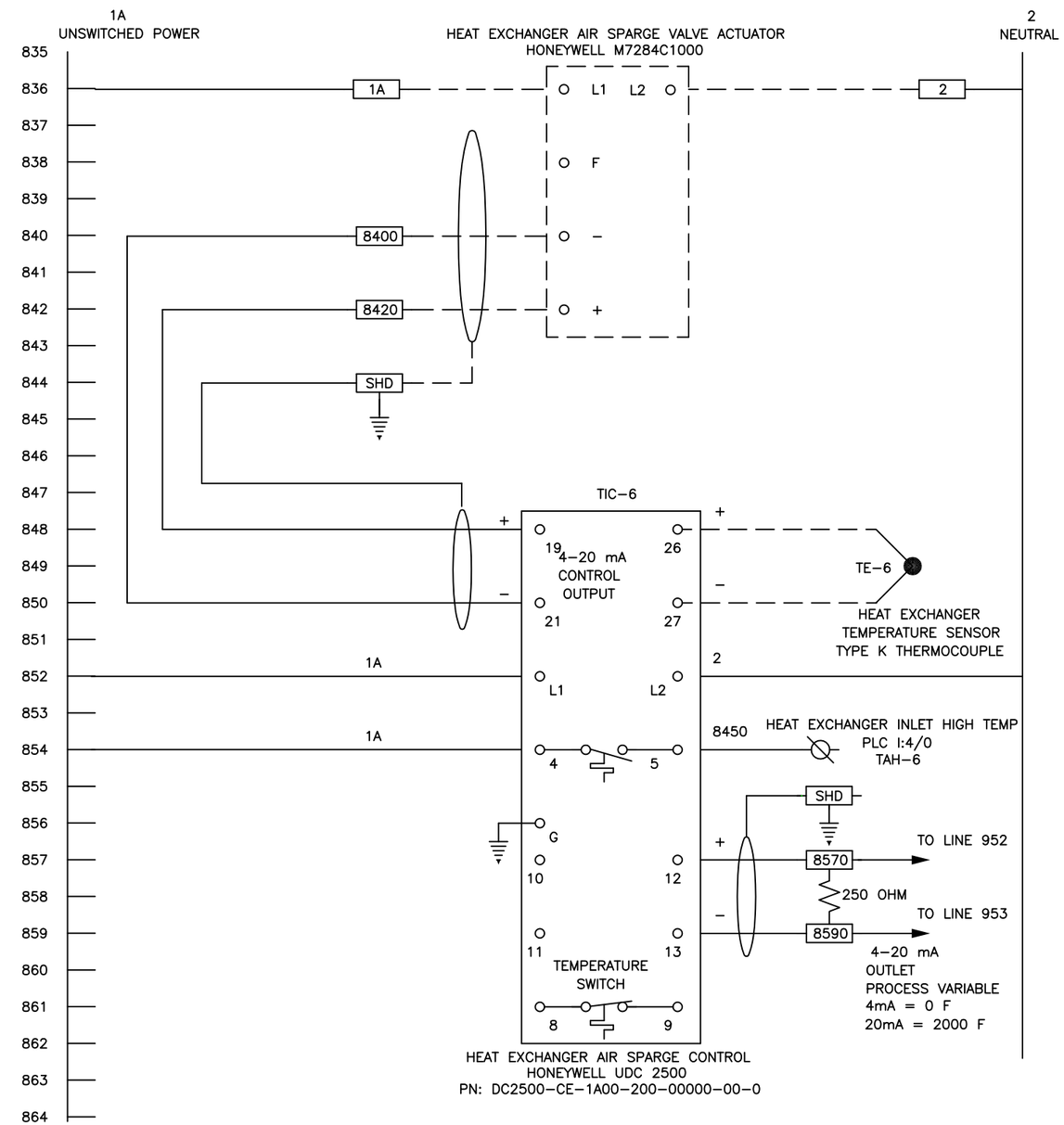

REV	BY	DATE	CHANGE
1	BPH	9/2/11	Submittal

INTELLISHARE ENVIRONMENTAL
CLEAN AIR SOLUTIONS

PROJECT ID

TITLE
ELECTRICAL SCHEMATIC
CT01000

DRAWING NO. N-11-1199-408

SCALE NONE

DRAWN EAM DATE 8/7/11
CHECKED DATE
APPROVED DATE
LAST DRAWN BY EAM DATE 8/7/11

CUSTOMER
Solutia
W.G. Krummerich Facility
Sauget, IL

KF NUMBER 11291

PAGE 1 OF 1

LAST PLOTTED BY EAM DATE 8/7/11

MCP PANEL WIRING

1A UNSWITCHED POWER

2 NEUTRAL

PLC – BASE UNIT
ALLEN–BRADLEY
1766–L32AWA
MICROLOGIX 1400

PLC INPUTS REFERENCE

Line	Device	Wire	Input	Common
900				
901	E–STOP – SEE LINE 313	1	I:0/0	AC COM0
902	LOW FUEL PRESSURE SWITCH – SEE LINE 320	3200	I:0/1	
903	HIGH FUEL PRESSURE SWITCH – SEE LINE 320	3201	I:0/2	
904	L.E.L. SWITCH – SEE LINE 325	3250	I:0/3	
905	HIGH INLET TEMP – SEE LINE 325	3251	I:0/4	AC COM1
906	HIGH OUTLET TEMP – SEE LINE 325	3252	I:0/5	
907	SYSTEM BLOWER RUNNING – SEE LINE 337	2120	I:0/6	
908	SYSTEM AIR PROVEN – SEE LINE 337	3370	I:0/7	
909	COMBUSTION FAN RUNNING – SEE LINE 343	3430	I:0/8	AC COM2
910	COMBUSTION FAN AIR PROVEN – SEE LINE 343	3431	I:0/9	
911	HIGH DF PRESSURE – SEE LINE 349	3490	I:0/10	
912	BURNER GAS VALVE CLOSED – SEE LINE 353	3530	I:0/11	
913	DUNGS VALVES CLOSED – SEE LINE 353	3531	I:0/12	AC COM3
914	FLAME FAILURE – SEE LINE 423	4230	I:0/13	
915	BURNER ON – SEE LINE 463	4630	I:0/14	
916	SYSTEM READY TEMP – SEE LINE 525	5250	I:0/15	
917	DILUTION VALVE OPEN – SEE LINE 614	6140	I:0/16	
918	SYSTEM BLOWER VFD FAULT – SEE LINE 741	2060	I:0/17	
919	SVE/AS SYSTEM RUNNING – SEE LINE 1047	10470	I:0/18	
920	SYSTEM INLET VALVE CLOSED – SEE LINE 806	8060	I:0/19	
921	INLET TEMP – SEE LINE 5280	5280	IA COM	
922	OUTLET TEMP – SEE LINE 6280	6280	IV (+)	
923	TEMP COMMON – SEE LINE 5300 & 6300	5300	IV (+)	
924				
925				
926				
927			1762–IA8	
928	SYSTEM BLOWER IN HAND – SEE LINE 814	8140	I:1/0	
929	SYSTEM BLOWER IN AUTO – SEE LINE 815	8150	I:1/1	AC COM
930	COMBUSTION BLOWER IN HAND – SEE LINE 814	8180	I:1/2	
931	COMBUSTION BLOWER IN AUTO – SEE LINE 815	8190	I:1/3	
932	SPARE		I:1/4	
933	HEAT EXCHANGER SPARGE IN HAND – SEE LINE 826	8260	I:1/5	AC COM
934	HEAT EXCHANGER SPARGE IN AUTO – SEE LINE 827	8270	I:1/6	
	HEAT EXCHANGER SPARGE RUNNING – SEE LINE 830	8300	I:1/7	

MCP PANEL WIRING

1A UNSWITCHED POWER

2 NEUTRAL

1762–IA8

Line	Device	Wire	Input	Common
935				
936	HEAT EXCHANGER AIR SPARGE – SEE LINE 845	8450	I:4/0	
937			I:4/1	AC COM
938			I:4/2	
939			I:4/3	
940			I:4/4	
941			I:4/5	AC COM
942			I:4/6	
943			I:4/7	

1762–IF4

Line	Device	Wire	Input
944			
945			
946	INLET AIR FLOW – SEE LINE 702	7020	I:2.0+
947		–24	I:2.0–
948	STACK AIR FLOW – SEE LINE 710	7100	I:2.1+
949		–24	I:2.1–
950	LEL – SEE LINE 719	7210	I:2.2+
951		7200	I:2.2–
952	HEAT EXCHANGER TEMP – SEE LINE 858	.	I:2.3+
953		.	I:2.3–

1762–IT4

Line	Device	Wire	Input
954			
955			
956	STACK TEMP TYPE K THERMOCOUPLE TE–3	YELLOW	I:3.0+
957		RED	I:3.0–
958	HEAT EXCHANGER OUTLET TEMP TYPE K THERMOCOUPLE TE–4	YELLOW	I:3.1+
959		RED	I:3.1–
960	FLAME ARRESTOR OUTLET TEMP TYPE K THERMOCOUPLE TE–5	YELLOW	I:3.2+
961		RED	I:3.2–
962			I:3.3+
963			I:3.3–
964			

REV	BY	DATE	CHANGE
1	BPH	9/2/11	Submittal

INTELLISHARE ENVIRONMENTAL
CLEAN AIR SOLUTIONS

PROJECT ID

TITLE
ELECTRICAL SCHEMATIC
CT01000

DRAWING NO. N–11–1199 –409

SCALE NONE

DRAWN EAM DATE 8/7/11

CHECKED DATE

APPROVED DATE

LAST DRAWN BY EAM DATE 8/7/11

CUSTOMER
Solutia
W.G. Krummerich Facility
Sauget, IL

KF NUMBER 11291

PAGE 1 OF 1

LAST PLOTTED BY EAM DATE 8/7/11

MCP PANEL WIRING

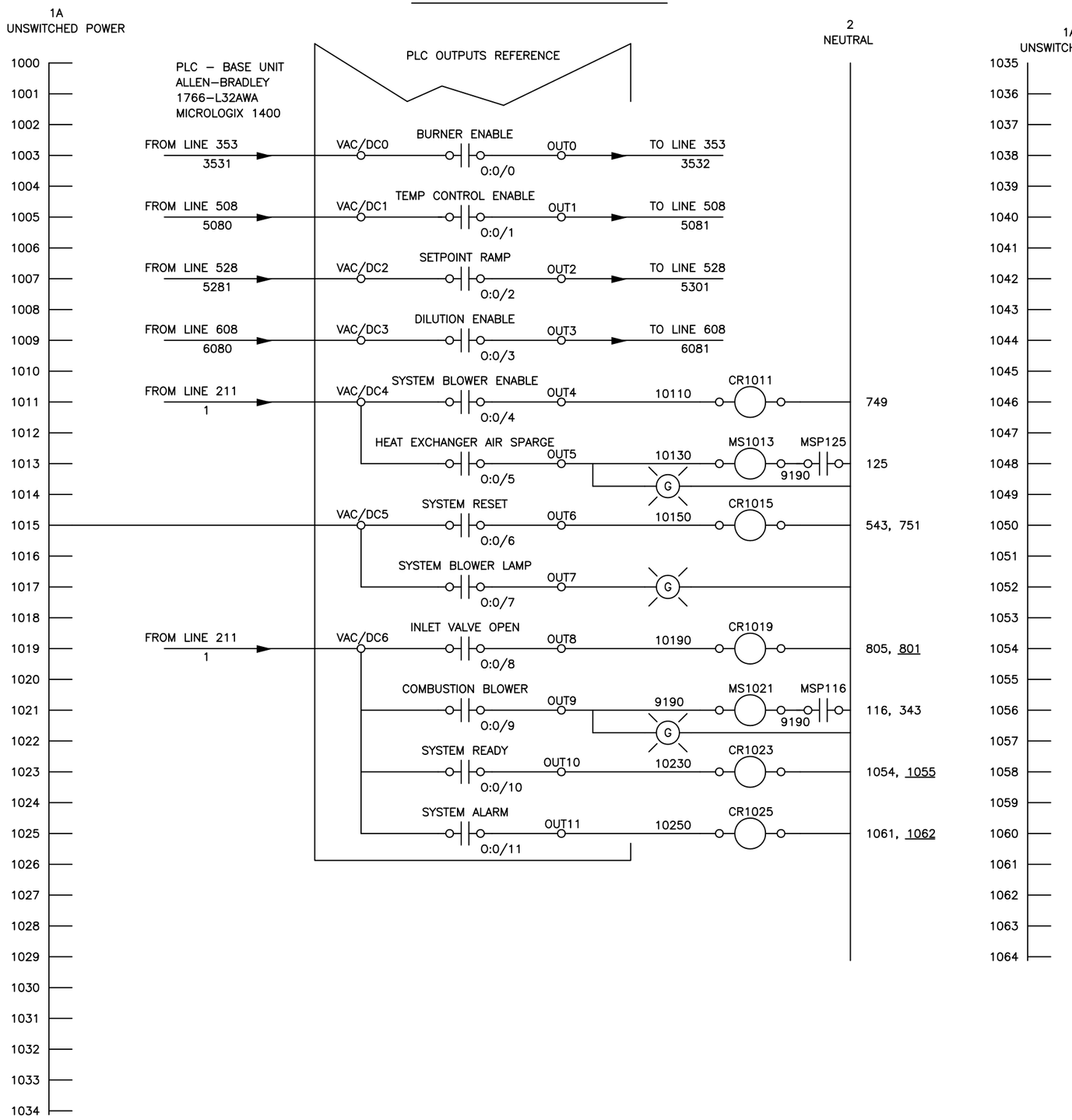

CUSTOMER INTERFACE WIRING
MCP PANEL TO CUSTOMER PANEL

SVE / AS SYSTEM RUNNING CONTACT
DRY CONTACT IN SVE / AS PANEL IS CLOSED WHEN SYSTEM IS RUNNING

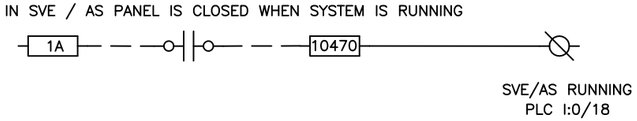

SYSTEM READY CONTACTS FOR REMOTE INDICATION/USE
RELAY ENERGIZES WHEN SYSTEM IS READY TO RECEIVE PROCESS STREAM

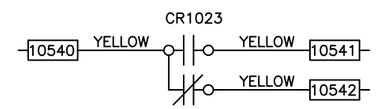

CONTACTS RATED 250V–3A MAX.

SYSTEM ALARM CONTACTS FOR REMOTE INDICATION/USE
RELAY ENERGIZES WHEN SYSTEM IS IN ALARM.

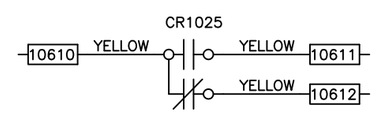

CONTACTS RATED 250V–3A MAX.

REV	BY	DATE	CHANGE
1	BPH	9/2/11	Submittal

INTELLISHARE ENVIRONMENTAL
CLEAN AIR SOLUTIONS

PROJECT ID

TITLE
ELECTRICAL SCHEMATIC
CT01000

DRAWING NO. N–11–1199 –410

SCALE NONE

DRAWN EAM DATE 8/7/11
CHECKED DATE
APPROVED DATE
LAST DRAWN BY EAM DATE 8/7/11

CUSTOMER
Solutia
W.G. Krummerich Facility
Sauget, IL

KF NUMBER 11291
PAGE 1 OF 1

LAST PLOTTED BY EAM DATE 8/7/11

MCP PANEL WIRING

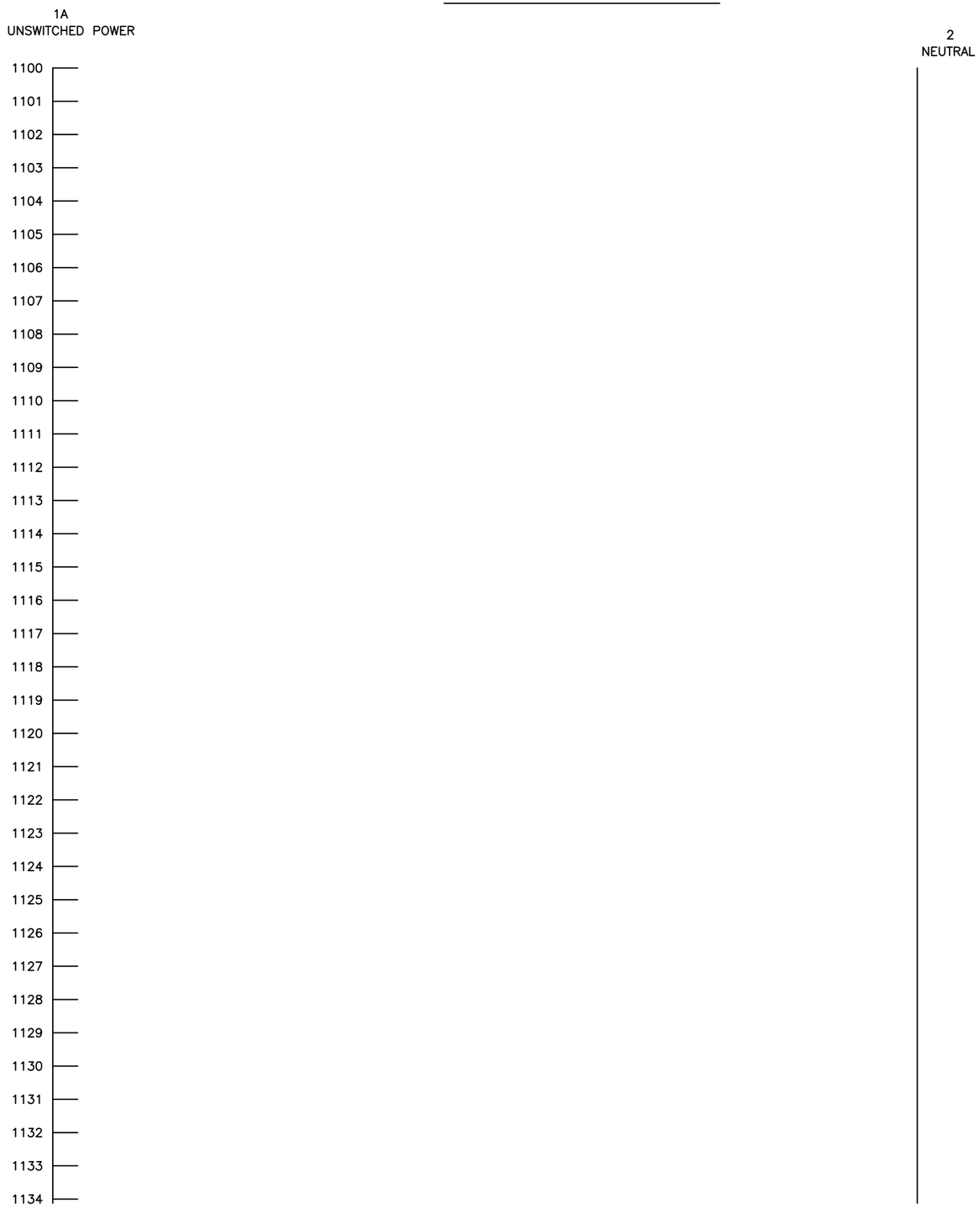

MCP PANEL WIRING

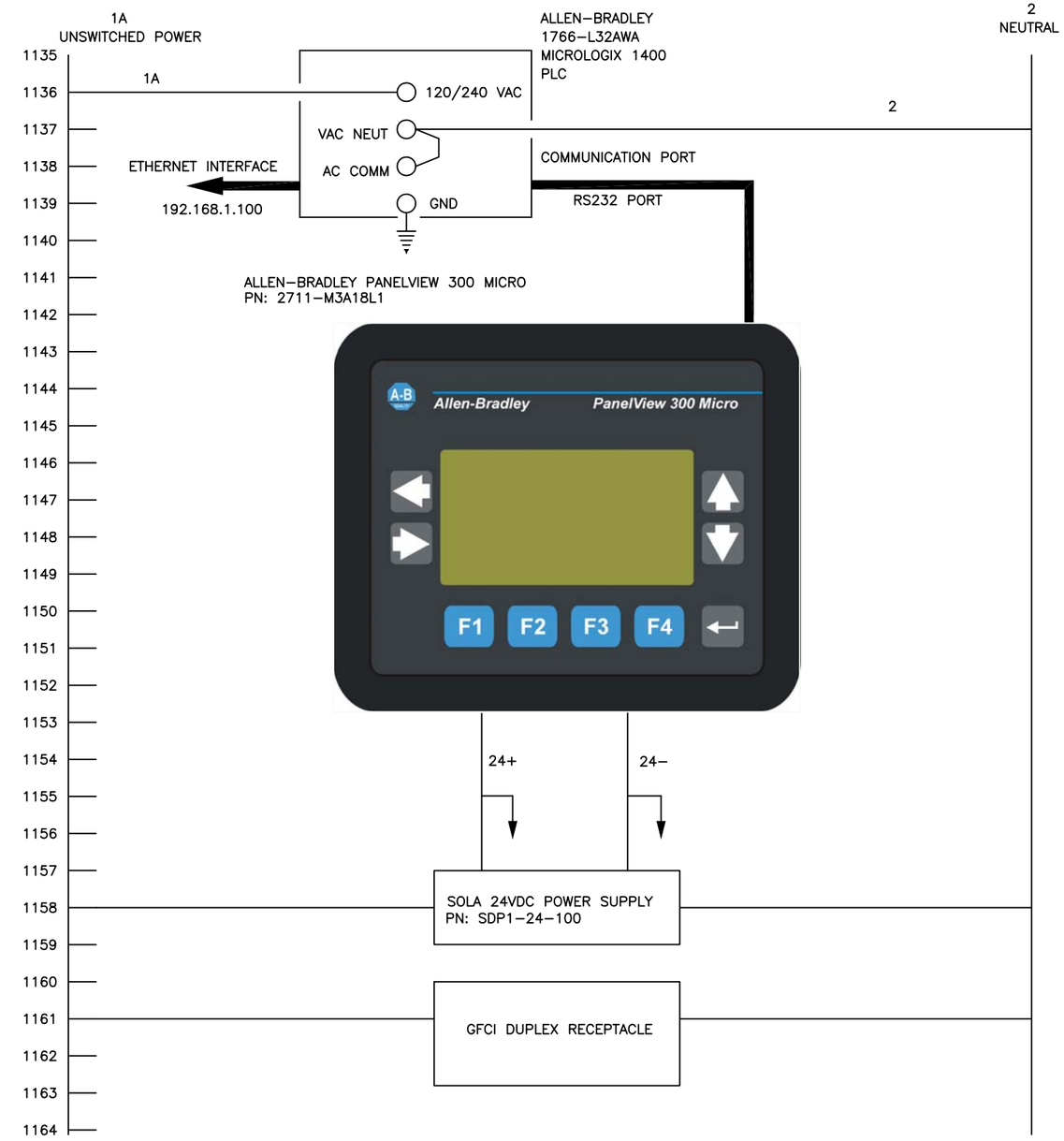

REV	BY	DATE	CHANGE
1	BPH	9/2/11	Submittal

INTELLISHARE ENVIRONMENTAL
CLEAN AIR SOLUTIONS

PROJECT ID

TITLE
ELECTRICAL SCHEMATIC
CTO1000

DRAWING NO. N–11–1199 –411

SCALE NONE

DRAWN EAM DATE 8/7/11
CHECKED DATE
APPROVED DATE
LAST DRAWN BY EAM DATE 8/7/11

CUSTOMER
Solutia
W.G. Krummerich Facility
Sauget, IL

KF NUMBER 11291

PAGE 1 OF 1

LAST PLOTTED BY EAM DATE 8/7/11

MCC PANEL WIRING

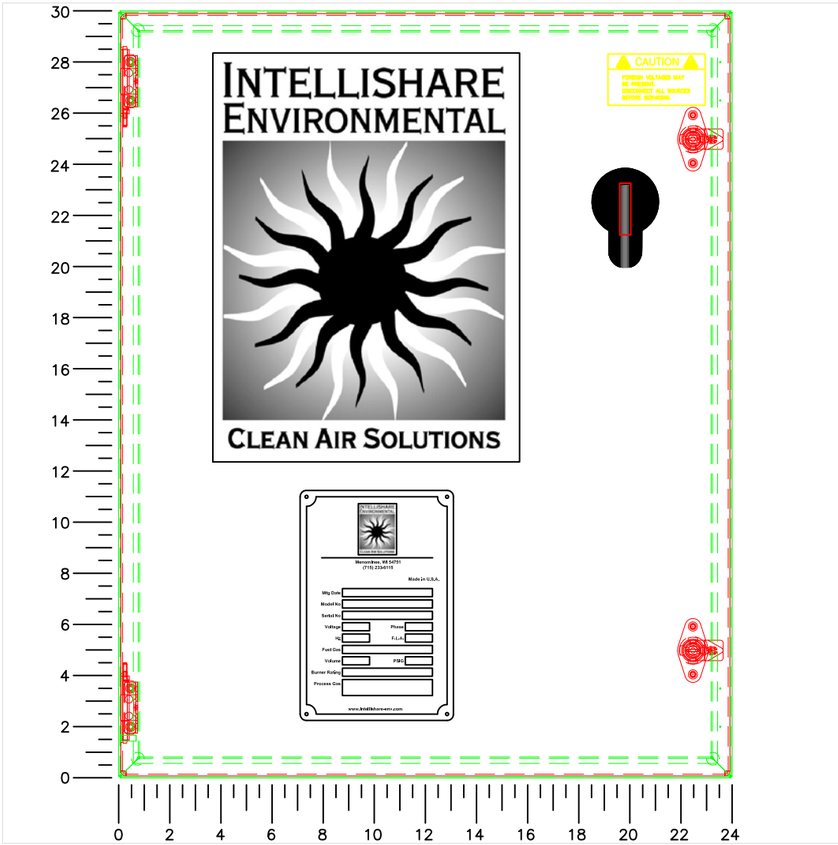

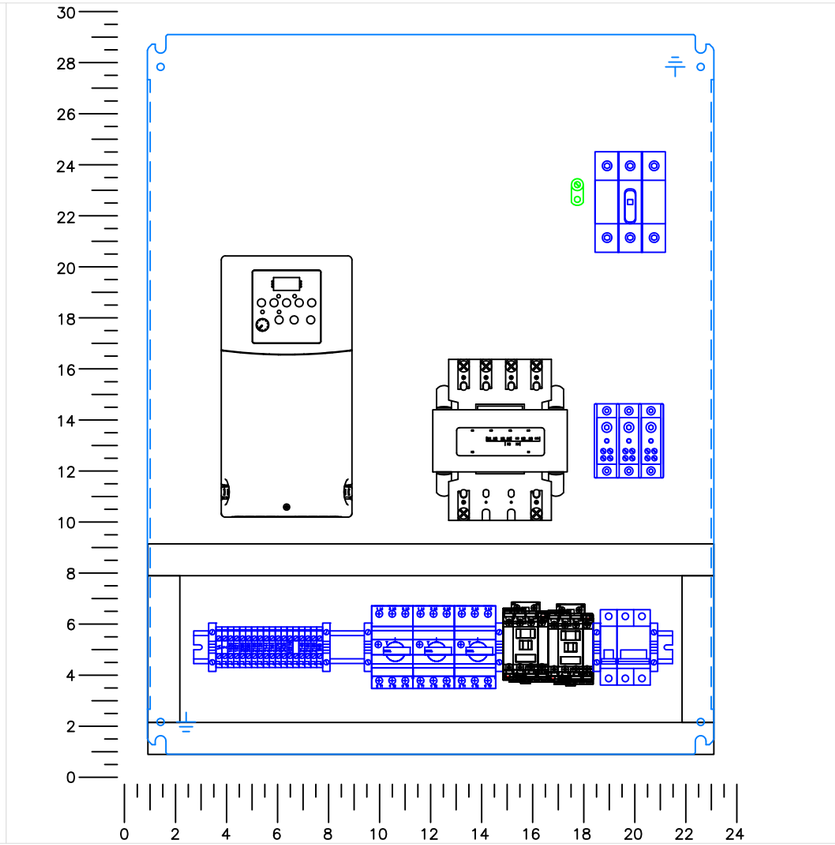

ITEM	QTY.	DESCRIPTION	PART NUMBER	MFG.
1	1	ENCLOSURE – 30" x 24" x 10"	CSD302410SS	HOFFMAN
2	1	SUBPANEL – 30" x 24"	CP3024	HOFFMAN
3				
4	1	CONTROL TRANSFORMER 460/230–115, 500VA	E500	HEVI–DUTY
5	1	CIRCUIT BREAKER 5A, 2P	WMZT2C05	EATON
6	1	CIRCUIT BREAKER 7A, 1P	WMZT1C07	EATON
7	1	DISTRIBUTION BLOCK	16220–3	BUSSMAN
8	6	WIREWAY	F1X3WH6	PANDUIT
	6	WIREWAY COVER	C1WH6	PANDUIT
9	1	CONTACTOR	100–C12D10	A–B
10	1	MOTOR CIRCUIT PROTECTOR	140M–C2E–C10	A–B
	1	MOTOR CIRCUIT PROTECTOR AUX CONTACT	140M–C–AFA10	A–B
11	1	POWERFLEX 400 VFD, 20 HP	22C–D018N103	A–B
12	1	MOTOR CIRCUIT PROTECTOR	140M–C2E–C16	A–B
13	1	MOTOR CIRCUIT PROTECTOR AUX CONTACT	140M–C–AFA10	A–B
14	1	GROUND LUG	L70	CONNECTOR MFG
15	1	CUSTOM DEVICE TAG – WARNING LABEL	TAG–CUS	CUSTOM ENGRAVING
16	14	TERMINAL BLOCK	1492–J3	A–B
	1	TERMINAL END BARRIER	1492–EBJ3	A–B
	1	TERMINAL BLOCK JUMPER	1492–CJLJ5–50	A–B
	3	TERMINAL BLOCK BLUE	1492–J3B	A–B
	1	TERMINAL BLOCK – GROUNDING	1492–JG3	A–B
17	6	DIN RAIL END CLAMP	1492–EAJ35	A–B
18	1	35MM DIN RAIL – SHALLOW	173220.05	ENTERLEC
19	1	35MM DIN RAIL – DEEP	101598.26	ENTERLEC
20	1	GROUND LUG	L70	CONNECTOR MFG
21	2	VENT KIT	A–VK64SS	HOFFMAN
22	2	FILTER KIT	A–FLT64	HOFFMAN
23	1	NON–FUSED DISCONNECT	OT63F3	ABB
	1	NON–FUSED DISCONNECT SHAFT	OXP6X290	ABB
	1	NON–FUSED DISCONNECT HANDLE	OHY65J6	ABB
24	1	CONTACTOR	100–C09D10	A–B
25	1	MOTOR CIRCUIT PROTECTOR	140M–C2E–B40	A–B
	1	MOTOR CIRCUIT PROTECTOR AUX CONTACT	140M–C–AFA10	A–B

CAUTION (12)

FOREIGN VOLTAGES MAY BE PRESENT. DISCONNECT ALL SOURCES BEFORE SERVICING.

ENLARGED VIEW OF TERMINAL BLOCKS

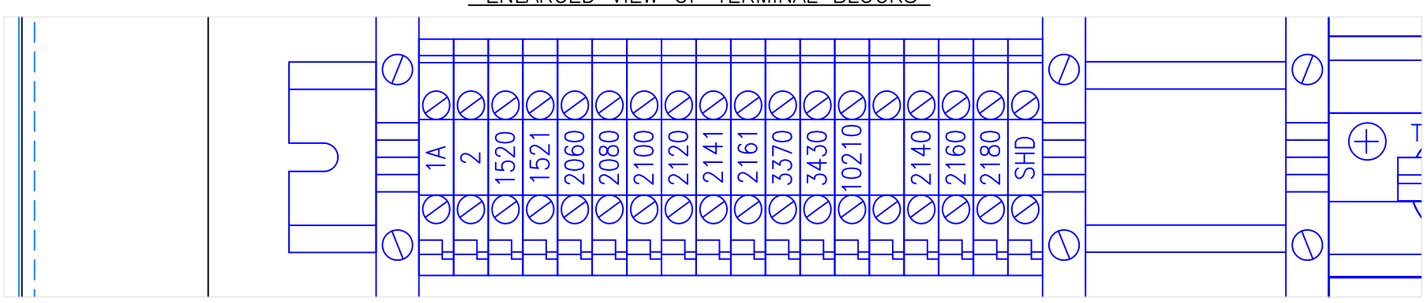

REV	BY	DATE	CHANGE
1	BPH	9/2/11	Submittal

INTELLISHARE ENVIRONMENTAL
CLEAN AIR SOLUTIONS

PROJECT ID

TITLE
ELECTRICAL SCHEMATIC
CT01000

DRAWING NO. N–11–1199 –450

SCALE NONE

DRAWN EAM DATE 8/7/11

CHECKED DATE

APPROVED DATE

LAST DRAWN BY EAM DATE 8/7/11

CUSTOMER
Solutia
W.G. Krummerich Facility
Sauget, IL

KF NUMBER 11291

PAGE 1 OF 1

LAST PLOTTED BY EAM DATE 8/7/11

MCP PANEL WIRING

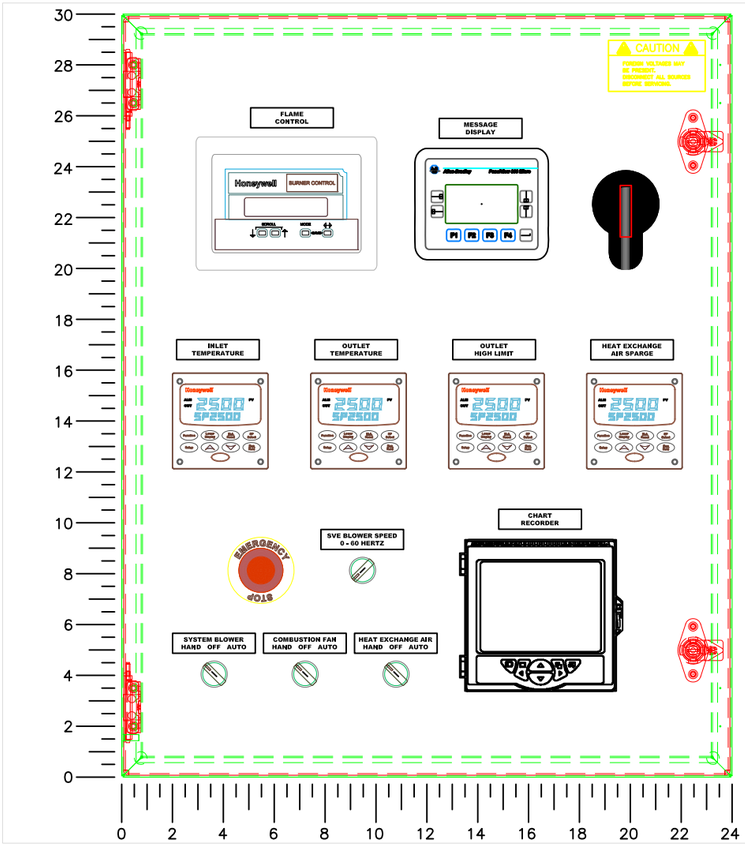

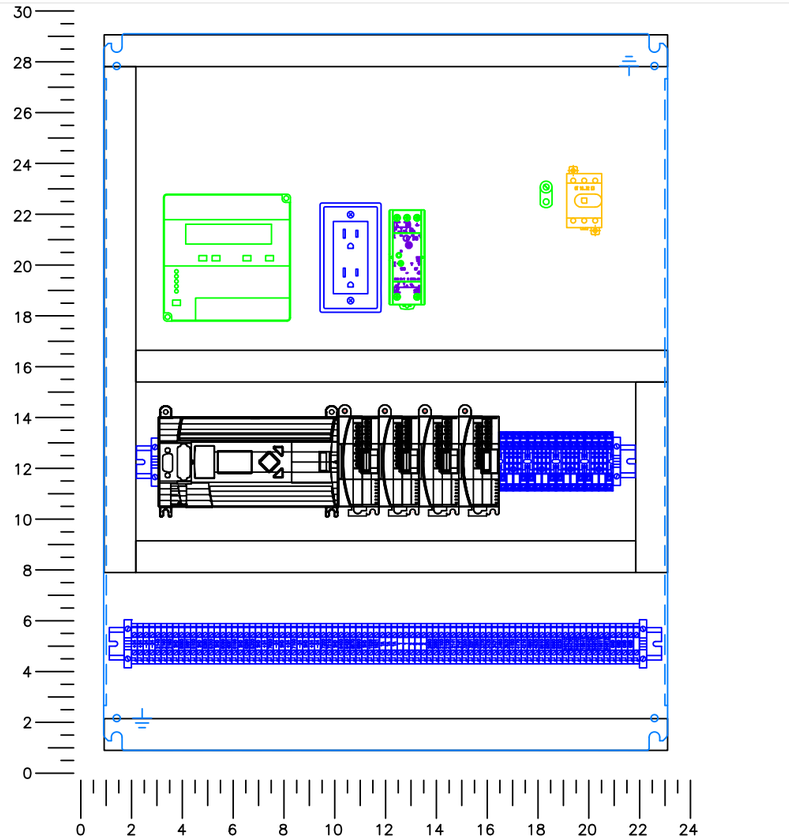

ITEM	QTY.	DESCRIPTION	PART NUMBER	MFG.
1	1	ENCLOSURE – 30" x 24" x 10"	CSD302410SS	HOFFMAN
2	1	SUBPANEL – 30" x 24"	CP3024	HOFFMAN
3				
4	1	DUPLEX RECEPTICLE + COVER GFCI	7599–I	LEVITON
	1	HANDY BOX	58361–1/2	STEEL CITY
5	4	CONTROL RELAY – 4 POLE	RU4S–CA110	IDEC
	4	CONTROL RELAY BASE – 4 POLE	SY4S–05	IDEC
6	5	CUSTOM DEVICE TAG	TAG–CUS	CUSTOM ENGRAVING
7	1	CUSTOM DEVICE TAG – WARNING LABEL	TAG–CUS	CUSTOM ENGRAVING
8	1	PB POT ASSEMBLY	800FP–POT6	A–B
9	6	DIN RAIL END CLAMP	1492–EAJ35	A–B
10	1	35MM DIN RAIL – SHALLOW	173220.05	ENTERLEC
11	1	35MM DIN RAIL – DEEP	101598.26	ENTERLEC
12	1	GROUND LUG	L70	CONNECTOR MFG
13	40	TERMINAL BLOCK	1492–J3	A–B
	1	TERMINAL END BARRIER	1492–EBJ3	A–B
	1	TERMINAL BLOCK JUMPER	1492–CJLJ5–50	A–B
	27	TERMINAL BLOCK BLUE	1492–J3B	A–B
	12	TERMINAL BLOCK – GROUNDING	1492–JG3	A–B
14	1	POWER SUPPLY	PSG60E	EATON
15	1	PANELVIEW 300 MESSAGE DISPLAY	2711–M3A18L1	A–B
16	1	MESSAGE DISPLAY CABLE	1761–CBL–HM02	A–B
17	11	WIREWAY	F1X3WH6	PANDUIT
	11	WIREWAY COVER	C1WH6	PANDUIT
18	1	PLC BASE UNIT	1766–L32AWA	A–B
	2	PLC INPUT MODULE	1762–IA8	A–B
	1	PLC ANALOG INPUT MODULE	1762–IF4	A–B
	1	PLC THERMCOUPLE INPUT MODULE	1762–IT4	A–B
19	1	PB E–STOP OPERATOR (E–STOP)	800FP–MP44	A–B
	1	PB BACKER	800F–ALP	A–B
	1	PB E–STOP LEGEND	800F–15YE112	A–B
	1	PB NC CONTACT BLOCK	800F–X01	A–B
20	1	TEMPERATURE LIMIT – DC2500–EE–1L00–200–10000–E–0–0		HONEYWELL
21	2	TEMPERATURE CONTROLLER – DC2500–CE–1A00–200–00000–00–0		HONEYWELL
22	1	TEMPERATURE CONTROLLER – DC2500–CE–1A00–200–00000–00–0		HONEYWELL
23	1	FLAME SAFEGUARD	RM7895B–1013	HONEYWELL
	1	FLAME SAFEGUARD MOUNTING BASE	Q7800A–1005	HONEYWELL
	1	FLAME STRENGTH AMPLIFIER	R7847A–1033	HONEYWELL
	1	PRE–PURGE TIMER 30 SEC.	ST7800A–1039	HONEYWELL
	1	DISPLAY MODULE	S7800A–1142	HONEYWELL
24	1	PAPERLESS CHART RECORDER	SM503FB/U000000E/STD	ABB
25	1	NON–FUSED DISCONNECT	OT45F3	ABB
	1	NON–FUSED DISCONNECT SHAFT	OXP6X290	ABB
	1	NON–FUSED DISCONNECT HANDLE	OHY65J6	ABB
26	3	PB ILLUMINATED SELECTOR OPERATOR	800FM–LSL33	A–B
	3	PB BACKER	800F–ALP	A–B
	3	PB LED	800F–N5G	A–B
	6	PB NO CONTACT BLOCK	800F–X10	A–B

ALL TAGS BLACK WITH WHITE LETTERS

A FLAME CONTROL (11)

B MESSAGE DISPLAY (11)

C SYSTEM BLOWER HAND OFF AUTO (11)

D COMBUSTION BLOWER HAND OFF AUTO (11)

E INLET TEMPERATURE (11)

F OUTLET TEMPERATURE (11)

G OUTLET HIGH LIMIT (11)

H BLOWER SPEED 0 – 60 HERTZ (11)

J

K

CAUTION (12)

FOREIGN VOLTAGES MAY BE PRESENT. DISCONNECT ALL SOURCES BEFORE SERVICING.

ENLARGED VIEW OF TERMINAL BLOCKS

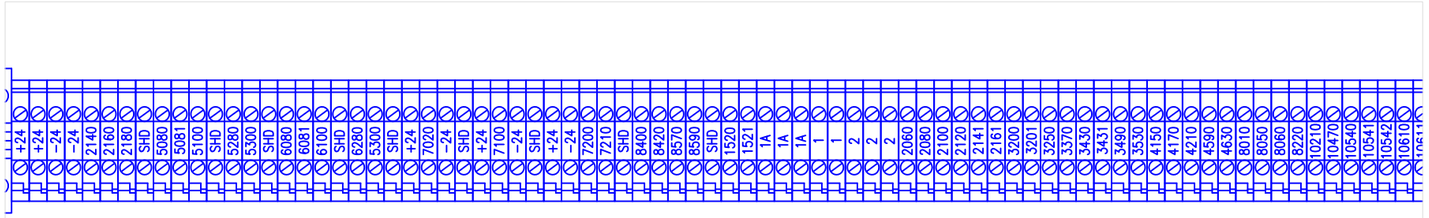

REV	BY	DATE	CHANGE
1	BPH	9/2/11	Submittal

INTELLISHARE ENVIRONMENTAL
CLEAN AIR SOLUTIONS

PROJECT ID

TITLE
ELECTRICAL SCHEMATIC
CT01000

DRAWING NO. N–11–1199 –451

SCALE NONE

DRAWN EAM DATE 8/7/11

CHECKED DATE

APPROVED DATE

CUSTOMER
Solutia
W.G. Krummerich Facility
Sauget, IL

LAST DRAWN BY EAM DATE 8/7/11

KF NUMBER 11291

PAGE 1 OF 1

LAST PLOTTED BY EAM DATE 8/7/11

Wiring Instructions/Information

Field Connection	Terminal Strip	Function Text
Y	1	Low Fuel Pressure SW – Common
Y	3200	Low Fuel Pressure SW – Return
Y	3200	High Fuel Pressure SW – Common
Y	3201	High Fuel Pressure SW – Return
O	2301	L.E.L. SW – Common (Optional)
O	3250	L.E.L. SW – Return (Optional)
Y	2100	System Air SW – Common
Y	2120	System Air SW – Return
O	3430	Combustion Air Pressure SW – Common
O	3431	Combustion Air Pressure SW – Return
Y	3431	High DF Pressure SW – Common
Y	3490	High DF Pressure SW – Return
Y	4150	Ignition Transformer – Black Wire
Y	2	Ignition Transformer – White Wire
Y	4170	Pilot Solenoid Valves – Red Wire
Y	2	Pilot Solenoid Valves – Red Wire
Y	2	Blocking & Main Gas Valve Actuator Terminal #1
Y	4210	Blocking & Main Gas Valve Actuator Terminal #2
Y	4210	Blocking & Main Gas Valve Actuator Terminal #3
Y	1	Gas Valve SW – Common – Terminal #3
Y	4590	Gas Valve SW – Return – Terminal #1
Y	4630	Gas Valve SW – Return – Terminal #2
Y	3490	Burner Valve Actuator SW – Common
Y	3530	Burner Valve Actuator SW – Return
Y	1	Dilution Valve Actuator SW – Common
Y	6140	Dilution Valve Actuator SW – Return
Y	1A	Burner Valve Actuator Main Power – L1
Y	2	Burner Valve Actuator Main Power – L2
Y	1A	Dilution Valve Actuator Main Power – L1
Y	2	Dilution Valve Actuator Main Power – L2
Y	1A	Inlet Valve Closed Limit Switch – Common
Y	8060	Inlet Valve Closed Limit Switch – Return
Y	8050	Inlet Valve Open
Y	8010	Inlet Valve Close
Y	2	Inlet Valve Common
Y	1A	Inlet Valve Hot
Y	1A	Heat Exchange Exit High Temp – Feed
Y	8220	Heat Exchange Exit High Temp – Return

Terminal Block TB1 (Control Voltage)

Terminal block "TB1" represents all Control Voltage terminal connections. The "Field Conn." column is marked with an "Y" to identify required field connections, and an "O" for optional connections.

All wiring shall be RED 14 guage type THHN and must be isolated from low voltage wiring.

Warning: Follow appropriate guidlines when wiring to classified environment.

Field Connection	Terminal Strip	Function Text
Y	5081	Burner Valve Actuator – Analog Command (–)
Y	5100	Burner Valve Actuator – Analog Command (+)
Y	6081	Dilution Valve Actuator – Analog Command (–)
Y	6100	Dilution Valve Actuator – Analog Command (+)
Y	+24	Inlet Air Flow – Input
Y	7020	Inlet Air Flow – Output
Y	+24	Stack Air Flow – Input
Y	7100	Stack Air Flow – Output
Y	8400	Heat Exchanger Valve Actuator – Analog Command(–)
Y	8420	Heat Exchanger Valve Actuator – Analog Command(+)
Y	+24	LEL Power (+)
Y	–24	LEL Power (–)
Y	7210	LEL Output (+)
Y	7200	LEL Output (–)

Terminal Block TB2 (Low Voltage)

Terminal block "TB2" represents all Low Voltage terminal connections. The "Field Conn." column is marked with an "Y" to identify required field connections, and an "O" for optional connections.

All wiring shall be 18 AWG 3 conductor shielded belden cable or equivilent and must be isolated from high voltage wiring.

Warning: Follow appropriate guidlines when wiring to classified environment.

INCOMING POWER - 460V, 3 Phase

Incoming power shall be wired to the Fuse Block provided, see schematic line #101.
Wire must be sized to meet NEC & Local code requirements.

MOTOR CONNECTIONS

All field wiring for motors shall be black in color and sized to meet local and NEC requirements.

Connections are to be made directly from motor to overload block as shown on page 401 of the schematic.

All motor ground connections are to be connected to ground bar on panel.

Always isolate from any low voltage wiring.

The motors to be wired are shown below:

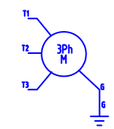

MTR	VOLTS	AMPS	WIRE
1M	460V	12	14AWG
2M	460V	6	14AWG
3M	460V	3.4	14AWG

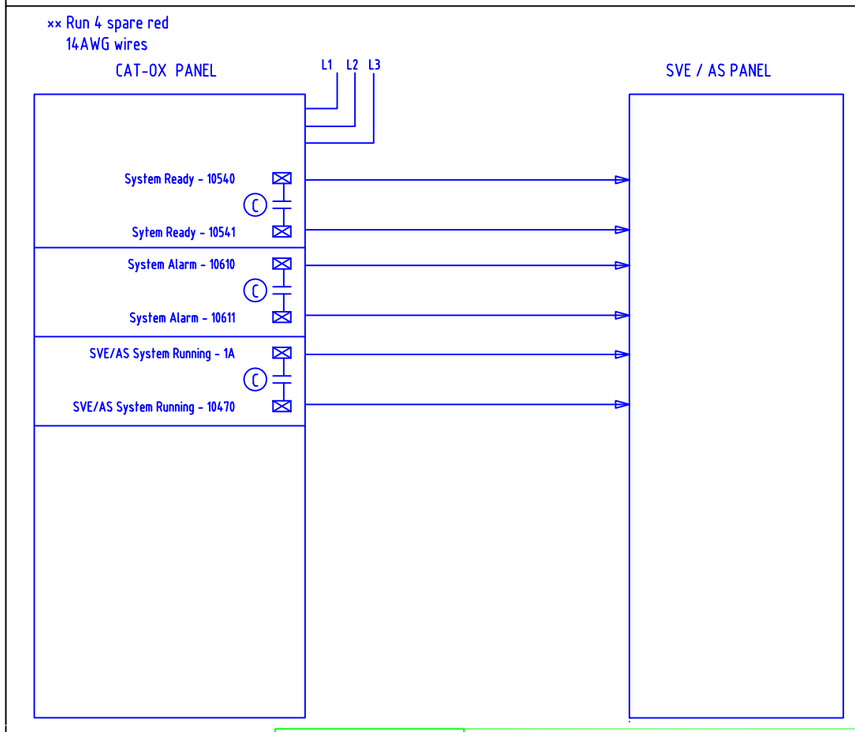

REV	BY	DATE	CHANGE
1	BPH	9/2/11	Submittal

INTELLISHARE ENVIRONMENTAL
CLEAN AIR SOLUTIONS

PROJECT ID

TITLE
ELECTRICAL SCHEMATIC
CT01000

DRAWING NO. N–11–1199 –460

SCALE NONE

DRAWN EAM DATE 8/7/11
CHECKED DATE
APPROVED DATE
LAST DRAWN BY EAM DATE 8/7/11

CUSTOMER
Solutia
W.G. Krummerich Facility
Sauget, IL

KF NUMBER 11291

PAGE 1 OF 1

LAST PLOTTED BY EAM DATE 8/7/11

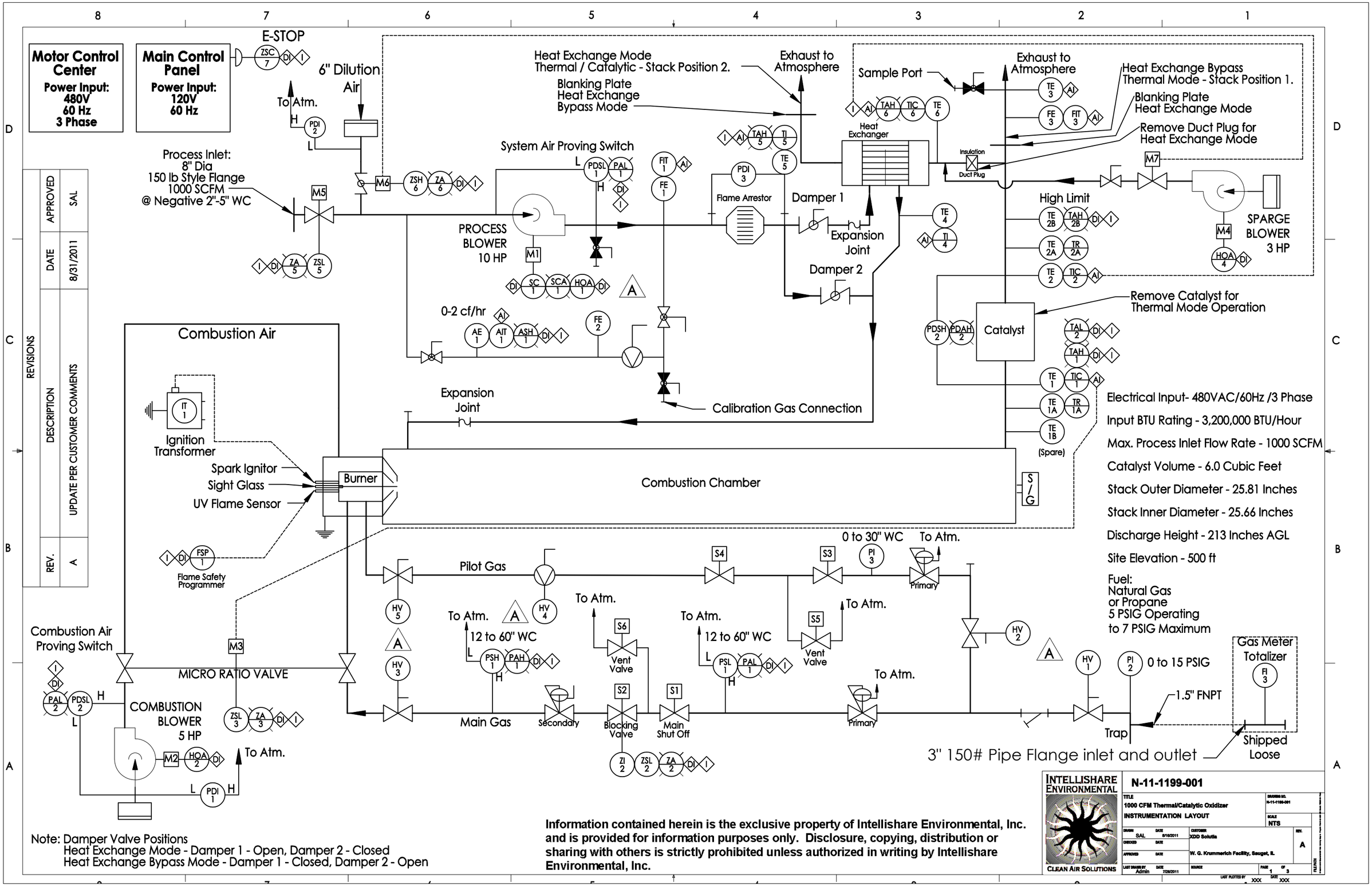

Note: Damper Valve Positions
Heat Exchange Mode - Damper 1 - Open, Damper 2 - Closed
Heat Exchange Bypass Mode - Damper 1 - Closed, Damper 2 - Open

Information contained herein is the exclusive property of Intellishare Environmental, Inc. and is provided for information purposes only. Disclosure, copying, distribution or sharing with others is strictly prohibited unless authorized in writing by Intellishare Environmental, Inc.

Measured Variable		Succeding Letters		Valve Bodies		Miscellaneous		Operators	
A	Analysis	A	Alarm		Valve (N.O. or Unspecified)		Centrifugal Blower	M	Electric Motor
F	Flow Rate	C	Controller		Valve Normally Closed			S	Solenoid
I	Current	D	Differential		Ball Valve		Flow Orifice		Manual
L	Level	E	Primary Element		Check Valve			S/G	Sight Glass
M	Motor	H	High		Butterfly Valve		Electrical Line		
P	Pressure	I	Indicator		Damper		Pneumatic Line		Vortex Damper
T	Temperature	L	Light		Orifice Valve		Process Ductwork		
Z	Position	L	Low				Panel Mounted Instrument		
		R	Record		Pressure Regulator (Self Contained)		Locally Mounted Instrument		Filter
		S	Switch				Mounted Inside Panel	AI	Analog Input
		T	Transmitter		Pressure Regulator (External Backload)		Alarm	DI	Digital Input
		V	Valve				Transition	I	Interlock
				T	Sample Port				

Information contained herein is the exclusive property of Intellishare Environmental, Inc. and is provided for information purposes only. Disclosure, copying, distribution or sharing with others is strictly prohibited unless authorized in writing by Intellishare Environmental, Inc.

INTELLISHARE ENVIRONMENTAL
CLEAN AIR SOLUTIONS

N-11-1199-001

TITLE: 1000 CFM Thermal/Catalytic Oxidizer
INSTRUMENTATION LEGEND

DRAWING NO.: N-11-1199-001
SCALE: NTS
REV.: A

DRAWN: SAL DATE: 6/16/2011
CHECKED: DATE:
APPROVED: DATE:
LAST DRAWN BY: Admin DATE: 7/20/2011
CUSTOMER: XDD Solutia
W. G. Krummerich Facility, Sauget, IL
SOURCE:
PAGE 2 OF 3
LAST PLOTTED BY: XXX DATE: XXX
FILE PATH:

MODE	OXIDIZER READY CONTACT	OXIDIZER ALARM CONTACT	INLET VALVE M5	DILUTION VALVE M6	SYSTEM FAN M1	SYSTEM FAN SPEED CONTROL SC1	OXIDIZER COMBUSTION BLOWER M2	FIRING RATE VALVE M3	HEAT EX. SPARGE BLOWER M4	FUEL TRAIN BLOCKING VALVES S1,S2,S3,S4	FUEL TRAIN VENT VALVES S5,S6	OXIDIZER FLAME SAFETY FSP1
SYSTEM STOP	DISABLED	ENABLED	CLOSED	OPEN	DISABLED	DISABLED	DISABLED	CLOSED	DISABLED	CLOSED	OPEN	DISABLED
SYSTEM START PURGE	DISABLED	DISABLED	CLOSED	OPEN	ENABLED	PRE-SET VALUE 2000 SCFM	ENABLED	CLOSED	ENABLED	CLOSED	OPEN	DISABLED
SYSTEM PRE-HEAT	DISABLED	DISABLED	CLOSED	OPEN	ENABLED	PRE-SET VALUE 2000 SCFM	ENABLED	OPEN	ENABLED	OPEN	CLOSED	ENABLED
SYSTEM RUN	ENABLED	DISABLED	OPEN	ENABLED	ENABLED	PRE-SET VALUE 2000 SCFM	ENABLED	OPEN	ENABLED	OPEN	CLOSED	ENABLED
SYSTEM COOL-DOWN	DISABLED	DISABLED	CLOSED	OPEN	ENABLED 240 SEC.	PRE-SET VALUE 2000 SCFM	ENABLED 240 SEC.	CLOSED	ENABLED 240 SEC.	CLOSED	OPEN	DISABLED
SYSTEM ALARM	DISABLED	ENABLED	CLOSED	OPEN	ENABLED 240 SEC.	PRE-SET VALUE 2000 SCFM	ENABLED 240 SEC.	CLOSED	ENABLED 240 SEC.	CLOSED	OPEN	DISABLED
POWER FAULT	DISABLED	ENABLED	CLOSED	OPEN	DISABLED	DISABLED	DISABLED	CLOSED	DISABLED	CLOSED	OPEN	DISABLED

Information contained herein is the exclusive property of Intellishare Environmental, Inc. and is provided for information purposes only. Disclosure, copying, distribution or sharing with others is strictly prohibited unless authorized in writing by Intellishare Environmental, Inc.

INTELLISHARE ENVIRONMENTAL
CLEAN AIR SOLUTIONS

N-11-1199-001

TITLE: 1000 CFM Thermal/Catalytic Oxidizer
MODE CHART

DRAWING NO. N-11-1199-001
SCALE NTS
REV. A

DRAWN SAL DATE 8/16/2011
CHECKED DATE
APPROVED DATE
CUSTOMER XDD Solutia
W. G. Krummerich Facility, Sauget, IL
LAST DRAWN BY Admin DATE 7/28/2011
SOURCE
PAGE 3 OF 3
LAST PLOTTED BY XXX DATE XXX
FILE PATH

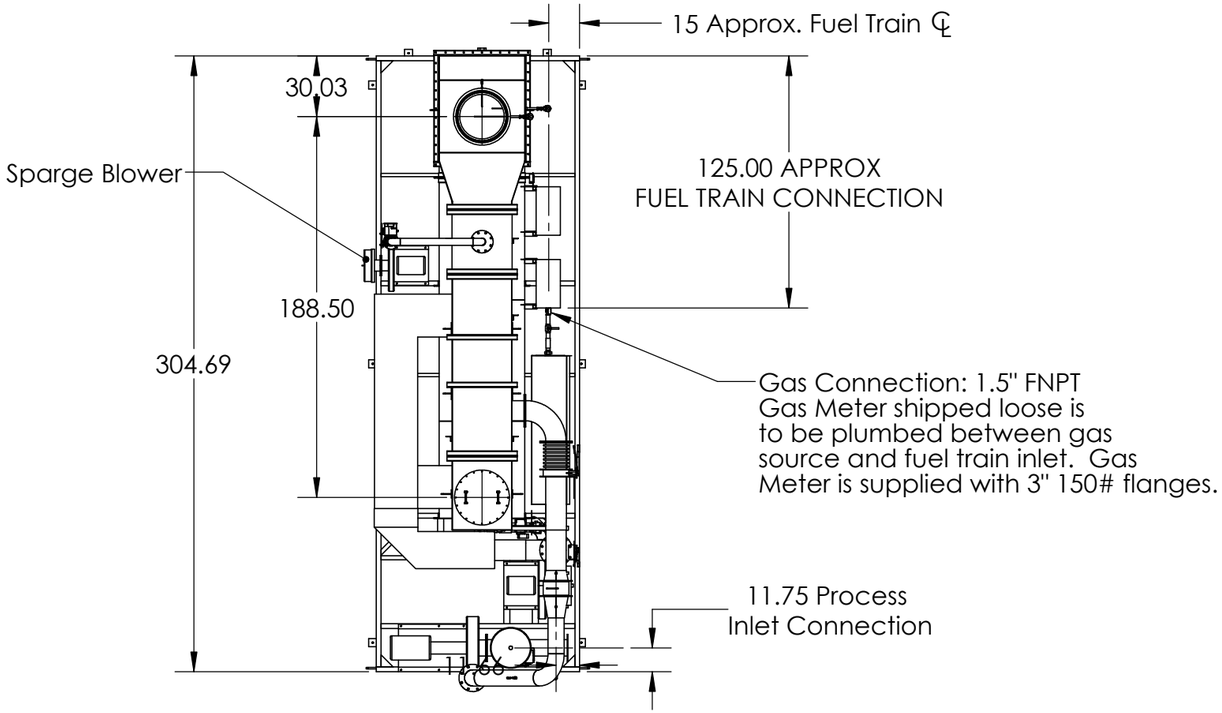

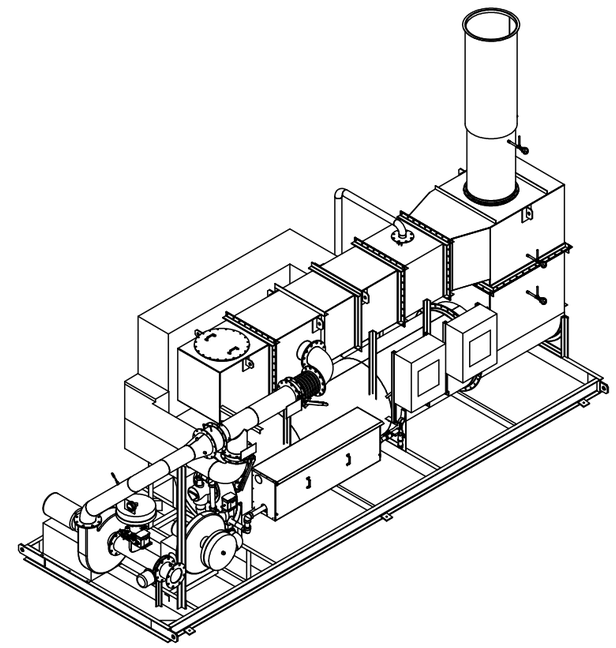

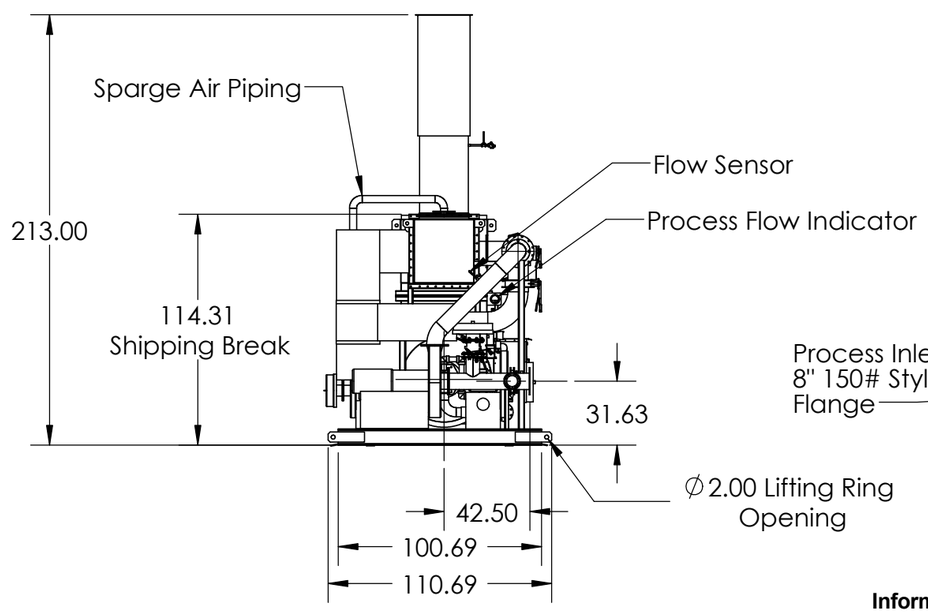

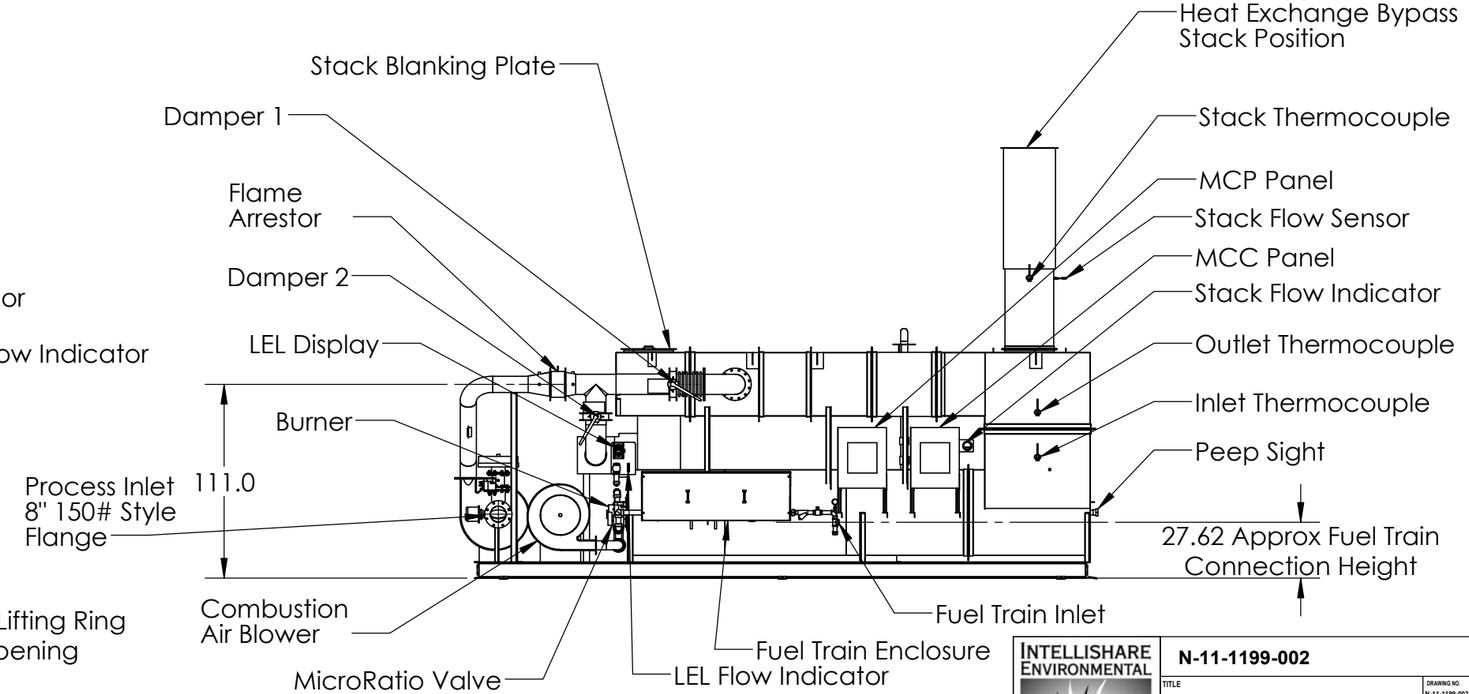

Note: All dimensions given in Inches unless otherwise indicated.

Information contained herein is the exclusive property of Intellishare Environmental, Inc. and is provided for information purposes only. Disclosure, copying, distribution or sharing with others is strictly prohibited unless authorized in writing by Intellishare Environmental, Inc.

INTELLISHARE ENVIRONMENTAL
CLEAN AIR SOLUTIONS

N-11-1199-002

TITLE	1000 CFM Thermal/Catalytic Oxidizer General Assembly Drawing
DRAWING NO.	N-11-1199-002
SCALE	NTS
DRAWN	SAL — DATE 7/30/2007
CHECKED	DATE
APPROVED	DATE
LAST DRAWN BY	Admin — DATE 8/22/2011
CUSTOMER	XDD Solutia
	W.G. Krummerich Facility, Sauget, IL
SOURCE	
REV.	-
PAGE	1 OF 1
LAST PLOTTED BY	XXX — DATE XXX

General Installation Notes

1. Failure to follow installation instructions may void manufacturer's warranty.
2. Prior to performing any maintenance activities, varify that the unit is shut down using applicable lock out tag out procedures. Also verify that the unit has cooled to a safe temperature.
3. Once system arrives on site visually inspect all components for any damage in transit and document any damage with the shipping carrier and Intellishare Environmental.
4. Store catalyst modules in a clean dry area.
5. For crane unloading, utilize spreader bars and lifting straps to balance the load prior to lift. Use caution and prevent damage to components.
6. Support trailer mounted units at all corners of the trailer using concrete blocks or other suitable blocking. Remove all weight from the wheels and axle for long term use. Use shims to level the trailer to within ¼".
7. Install the stack in the correct orientation without gaskets. Mounting hardware is provided.
8. Install the Thermocouple using stainless anti-seize compound on the threaded connection at the half coupling and the thermocouple connection. (See Detail A)
9. Install the Thermocouple Wiring and Differential pressure tubing to the stack connections. See Section B-B and the Terminal Designation Chart. Insert each thermocouple wire into its designated terminal so that only one wire is inserted into each terminal. Thermocouple connections are extremely sensitive and must be tightened to insure good electrical contact but not so tight as to cause the wire to fracture. Verify each connection by gently tugging on the wire checking for looseness. (Tubing, Conduit, & Wiring provided by Intellishare Environmental)
10. Install inlet piping to the process inlet connection. Verify all line debris has been removed from the inlet process line. All inlet piping should be independently supported. Multiple process line connections should be made with proper transitions to prevent turbulence and excessive pressure loss.
11. Connect fuel gas line to oxidizer fuel train inlet connection. Verify line size, supply volume and pressure requirements. Supply gas pressure must not exceed (7) psig static pressure in order to prevent damage to the gas train components. Leak test the entire gas train from the main gas inlet to the oxidizer burner. Any leaks should be repaired.
12. Connect main power to the oxidizer control panel. Verify proper voltage, phase, and all motor rotation. Voltage should be plus or minus 10% of rated voltage. Note: Do not make conduit penetrations into the top of the oxidizer control panel.
13. Connect any interface wiring between other's control panel and the oxidizer control panel. Note: Do not make conduit penetrations into the top of the oxidizer control panel. Thermocouple wire should be of the appropriate type and run in separate conduit from other wiring. Sensing and / or thermocouple wiring should not be run in high voltage conduit. Pull (4) spare interface wires.
14. For extended shut down periods, cover the exhaust stack to protect the system from the elements. The main gas line should be closed at the gas regulator and the oxidizer main gas train inlet valve. Turn off main power.

Thermal Mode Heat Exchange Bypass

1. Special insulating material pre-installed in the transition to protect the face of the heat exchanger tube sheet during heat exchange bypass mode.
2. Damper 1, is closed blocking incoming process flow from entering the heat exchanger.
3. Damper 2, is open alowing process flow to enter the combustion chamber directly.
4. Stack is in stack position 1, without gaket on flange.
5. Blanking plate is in stack position 2, with gasket on flange.
6. Temperature controls must be set per instructions in the O&M manual provided by Intellishare Environmental. Incorrect settings could adversely affect performance and could void manufacturer's warranty.

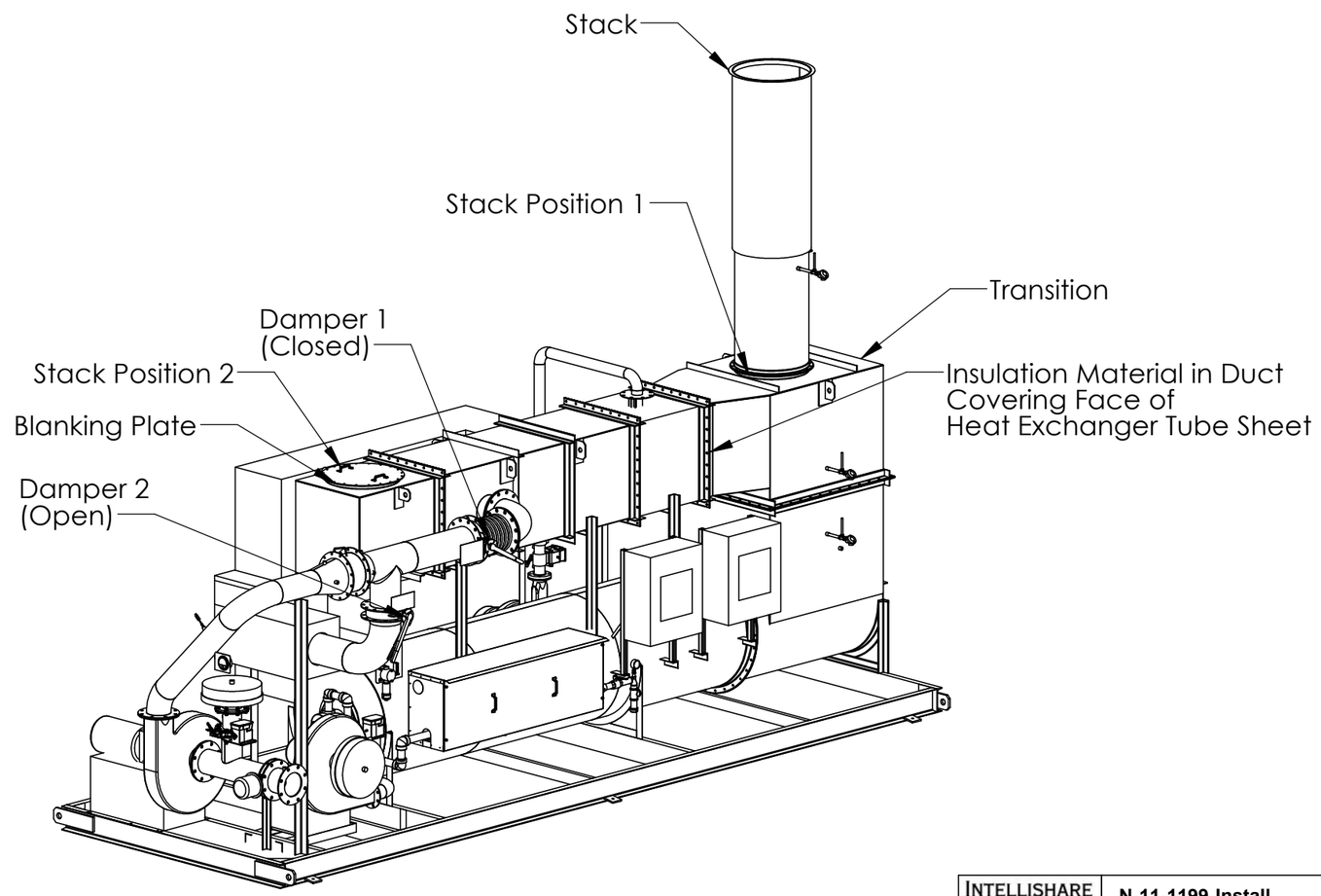

Information contained herein is the exclusive property of Intellishare Environmental, Inc. and is provided for information purposes only. Disclosure, copying, distribution or sharing with others is strictly prohibited unless authorized in writing by Intellishare Environmental, Inc.

INTELLISHARE ENVIRONMENTAL
CLEAN AIR SOLUTIONS

N-11-1199-Install

TITLE	1000 CFM THERMAL/CATALYTIC OXIDIZER INSTALL - MODE CHANGE DRAWING
DRAWING NO.	N-11-1199-Install
SCALE	NTS
DRAWN	SAL 8/2/2006
CHECKED	
APPROVED	
LAST DRAWN BY	Admin 8/22/2011
CUSTOMER	XDD Solutia
SOURCE	W.G. Krummerich Facility, Sauget, IL
REV.	-
PAGE	1 OF 4
LAST PLOTTED BY	XXX DATE XXX

Thermal Mode Heat Exchange Enabled

1. Remove the small length of pipe between the stack and the sample port plumbing. Store this in a clean dry area for future use.
2. Remove the stack from position 1.
3. Locate the insulation removal hook originally shipped in crate 1.
4. Using the insulation removal hook, carefully remove the special insulating material through the stack position 1 opening. This insulation is pre-installed in the transition to protect the face of the heat exchanger during heat exchange bypass mode and consists of soft blocks that are approximately 8 inches thick. Be carefull not to damage the rigid insulation behind these blocks. After removing the 8" material, the duct opening should measure appoximately 16" wide by 30" tall and all tube openings should be visible.
5. Remove the blanking plate and gasket from its location (stack position 2).
6. Locate the shorter sample tube pipe stored in crate1. Install the stack in the stack position 2 location, aligning the sample port connection with the tubing connection. Reuse the stainless fasteners removed with the stack. No gasket is required. Install the shorter length of tubing between the stack and sample port plumbing.
7. Install the blanking plate on the stack position 1 opening. A gasket is required and may be cut to length from the roll of drop warp tape shipped in crate 1. Keep unused portion for future use.
8. Damper 1, is open, allowing incoming process flow to enter the heat exchanger and pass through to the combustion chamber.
9. Damper 2, is closed blocking process flow from entering the combustion chamber directly.
10. Temperature controls must be set per instructions in the O&M manual provided by Intellishare Environmental. Incorrect settings could adversely affect performance and could void manufacturer's warranty.

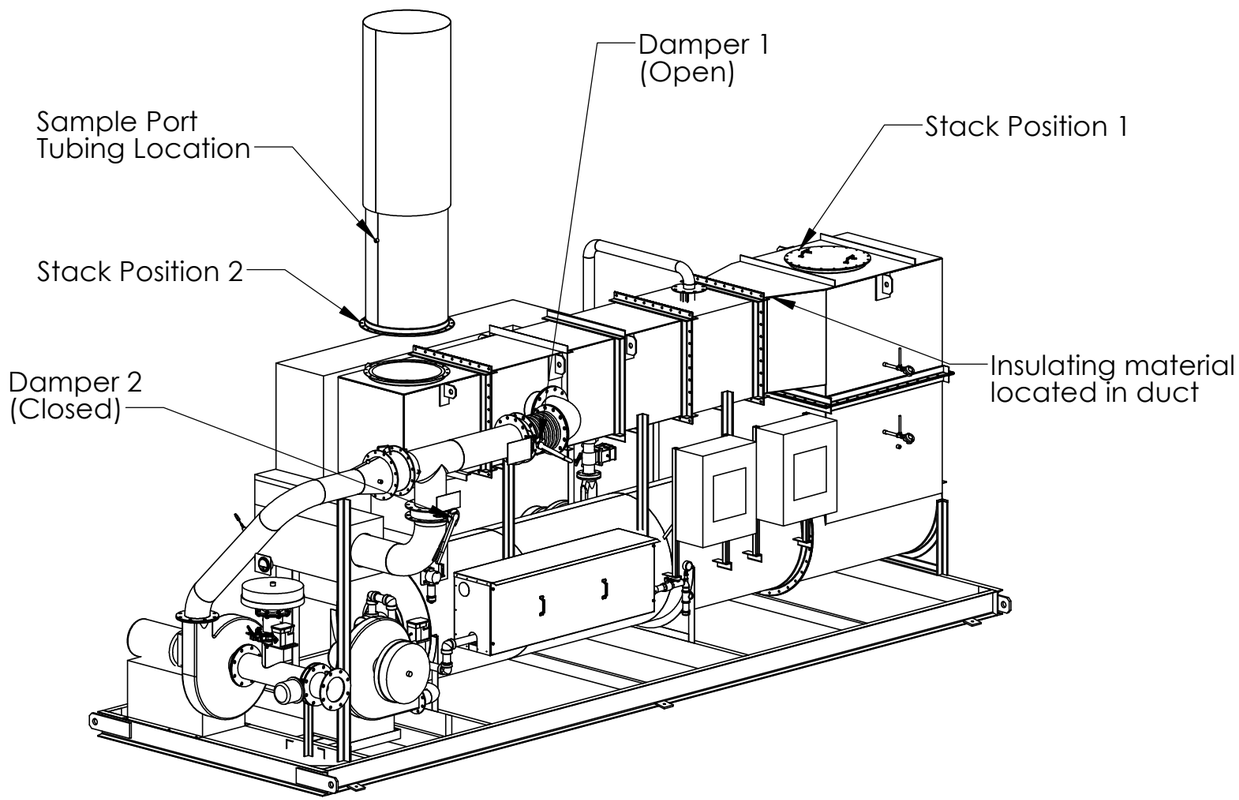

General Notes

1. Failure to follow installation instructions may void manufacturer's warranty.
2. Because of the size and weight of components, appropriate mechanical lift assistance is recommended.
3. Prior to performing any maintenance activities, varify that the unit is shut down using applicable lock out tag out procedures. Also verify that the unit has cooled to a safe temperature.

Information contained herein is the exclusive property of Intellishare Environmental, Inc. and is provided for information purposes only. Disclosure, copying, distribution or sharing with others is strictly prohibited unless authorized in writing by Intellishare Environmental, Inc.

INTELLISHARE ENVIRONMENTAL
CLEAN AIR SOLUTIONS

N-11-1199-Install

TITLE	1000 CFM THERMAL/CATALYTIC OXIDIZER INSTALL - MODE CHANGE DRAWING
DRAWING NO.	N-11-1199-Install
SCALE	NTS
DRAWN	SAL DATE 8/2/2006
CHECKED	DATE
APPROVED	DATE
LAST DRAWN BY	Admin DATE 8/22/2011
CUSTOMER	XDD Solutia
SOURCE	W.G. Krummerich Facility, Sauget, IL
REV.	-
PAGE	2 OF 4
LAST PLOTTED BY	XXX DATE XXX

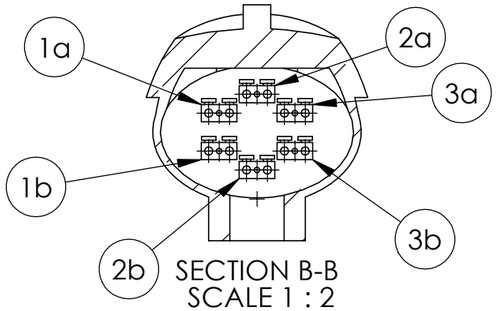

Thermocouple Terminal Designations			
Element	Terminal #	J	K
TE2	1a	White	Yellow
	1b	Red	Red
TE2A	2a	White	Yellow
	2b	Red	Red
TE2B	3a	White	Yellow
	3b	Red	Red

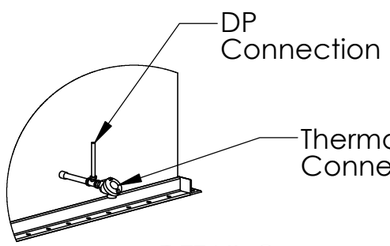

DETAIL C
SCALE 1 : 24

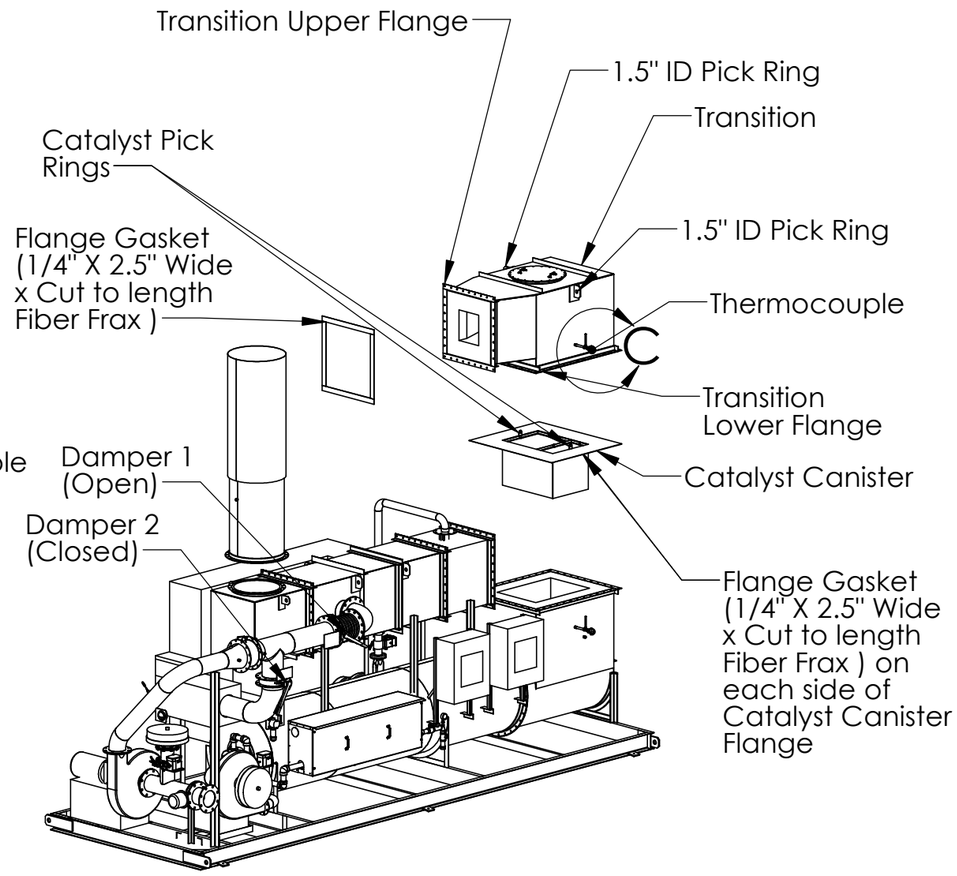

Catalytic Mode Heat Exchange Enabled

1. Disconnect the catalyst DP tubing from its connection above the outlet thermocouple.
2. Disconnect the wiring and conduit from the outlet thermocouple.
3. Disconnect the sample port not currently used that is to the right of the control panel.
4. Remove bolts from the transition upper flange.
5. Remove bolts from the transition lower flange.
6. Check that nothing is attached to the transition and carefully separate from the heat exchanger and the oxidizer and lift using the 1.5" ID pick rings provided.
7. Remove the spacer flange (shown on page 4)and store in a clean dry area for future use.
8. Install gaskets on both lower transition flanges. Reuse material if fit for use. New material (1/4" x 2.5" x cut to length), is provided in crate 1, with the catalyst module.
9. Lower the Catalyst into position using the 1" ID Catalyst Pick rings. Align Catalyst flange with the flange below so that all holes are centered.
10. Install a new gasket on the upper transition flange. The previous gasket may be reused if in good condition. New material (1/4" x 2.5" x cut to length), is provided in crate 1, with the catalyst module. If installing new material position all pieces so that they fit flush to one another and cover the entire face of the flange. Use the flange as a template and create holes for bolts using a tapered punch, by pushing the punch through the flange holes.
11. Carfully lower the transition into position so that flange holes are properly aligned.
12. Verify that all gaskets are in position.
13. Reuse flange bolts removed during disassembly and tighten the upper and lower transition flanges.
14. Reconnect the catalyst DP tubing to the outlet thermocouple DP connection.
15. Reconnect the outlet thermocouple electrical connections per the connection diagram on this sheet. Varify each connection by gently tugging on each wire when done.
16. Reattach the sample port plumbing disconnected earlier in this procedure.
17. Damper 1, is open allowing incoming process flow to enter the heat exchanger, then pass through to the combustion chamber.
18. Damper 2, is closed blocking process flow from entering the combustion chamber directly.
19. Temperature controls must be set per instructions in the O&M manual provided by Intellishare Environmental. Incorrect settings could adversely affect performance and could void manufacturer's warranty.

General Notes

1. Failure to follow installation instructions may void manufacturer's warranty.
2. Because of the size and weight of components, appropriate mechanical lift assistance is recommended.
3. Prior to performing any maintenance activities, varify that the unit is shut down using applicable lock out tag out procedures. Also verify that the unit has cooled to a safe temperature.

Information contained herein is the exclusive property of Intellishare Environmental, Inc. and is provided for information purposes only. Disclosure, copying, distribution or sharing with others is strictly prohibited unless authorized in writing by Intellishare Environmental, Inc.

INTELLISHARE ENVIRONMENTAL
CLEAN AIR SOLUTIONS

N-11-1199-Install

TITLE	1000 CFM THERMAL/CATALYTIC OXIDIZER INSTALL - MODE CHANGE DRAWING
DRAWING NO.	N-11-1199-Install
SCALE	NTS
DRAWN	SAL 8/2/2006
CHECKED	
APPROVED	
LAST DRAWN BY	Admin 8/22/2011
CUSTOMER	XDD Solutia
SOURCE	W.G. Krummerich Facility, Sauget, IL
REV.	-
PAGE	3 OF 4
LAST PLOTTED BY	XXX DATE XXX

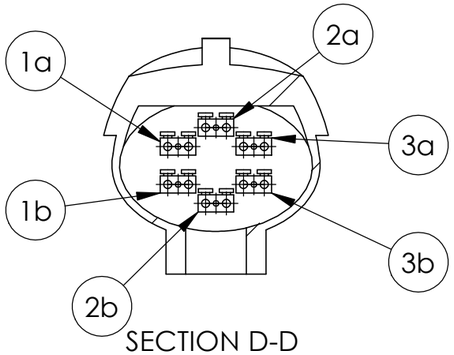

SECTION D-D
SCALE 1 : 2

Thermocouple Terminal Designations			
Element	Terminal #	J	K
TE2	1a	White	Yellow
	1b	Red	Red
TE2A	2a	White	Yellow
	2b	Red	Red
TE2B	3a	White	Yellow
	3b	Red	Red

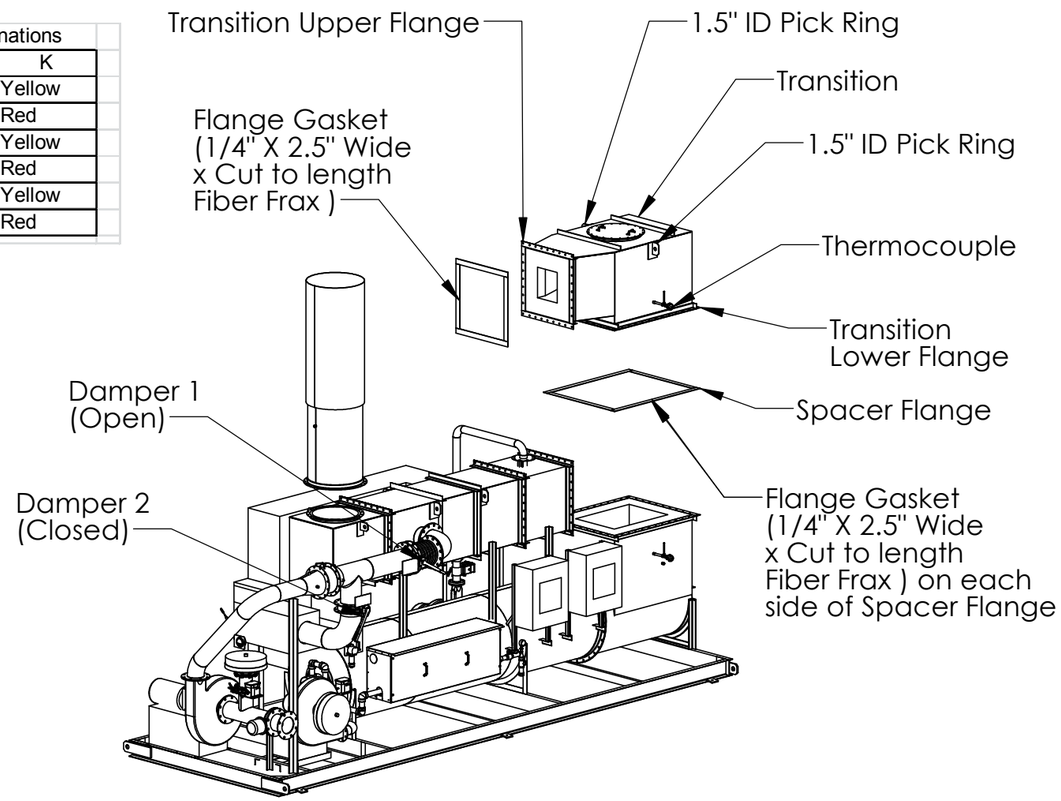

Thermal Mode Heat Exchange Enabled (Change from Catalytic to Thermal)

1. Disconnect the catalyst DP tubing from its connection above the outlet thermocouple.
2. Disconnect the wiring and conduit from the outlet thermocouple.
3. Disconnect the sample port not currently used that is to the right of the control panel.
4. Remove bolts from the transition upper flange.
5. Remove bolts from the transition lower flange.
6. Check that nothing is attached to the transition and carefully separate from the heat exchanger and the oxidizer and lift using the 1.5" ID pick rings provided.
7. Remove the catalyst module. Place in crate 1, and store in a clean dry area, for future use.
8. Install gaskets on both lower transition flanges. Reuse material if fit for use. New material (1/4" x 2.5" x cut to length), is provided in crate 1, with the catalyst module.
9. Align the spacer flange with the flange below so that all holes are centered.
10. Install a new gasket on the upper transition flange. The previous gasket may be reused if in good condition. New material (1/4" x 2.5" x cut to length), is provided in crate 1, with the catalyst module. If installing new material position all pieces so that they fit flush to one another and cover the entire face of the flange. Use the flange as a template and create holes for bolts using a tapered punch, by pushing the punch through the flange holes.
11. Carefully lower the transition into position so that flange holes are properly aligned.
12. Verify that all gaskets are in position.
13. Reuse flange bolts removed during disassembly and tighten the upper and lower transition flanges.
14. Reconnect the catalyst DP tubing to the outlet thermocouple DP connection.
15. Reconnect the outlet thermocouple electrical connections per the connection diagram on this sheet. Varify each connection by gently tugging on each wire when done.
16. Reattach the sample port plumbing disconnected earlier in this procedure.
17. Damper 1, is open allowing incoming process flow to enter the heat exchanger, then pass through to the combustion chamber.
18. Damper 2, is closed blocking process flow from entering the combustion chamber directly.
19. Temperature controls must be set per instructions in the O&M manual provided by Intellishare Environmental. Incorrect settings could adversely affect performance and could void manufacturer's warranty.

General Notes

1. Failure to follow installation instructions may void manufacturer's warranty.
2. Because of the size and weight of components, appropriate mechanical lift assistance is recommended.
3. Prior to performing any maintenance activities, varify that the unit is shut down using applicable lock out tag out procedures. Also verify that the unit has cooled to a safe temperature.

Information contained herein is the exclusive property of Intellishare Environmental, Inc. and is provided for information purposes only. Disclosure, copying, distribution or sharing with others is strictly prohibited unless authorized in writing by Intellishare Environmental, Inc.

INTELLISHARE ENVIRONMENTAL
CLEAN AIR SOLUTIONS

N-11-1199-Install

TITLE: Install - Mode Change Drawing N-11-1199			DRAWING NO. N-11-1199-Install SCALE NTS
DRAWN SAL	DATE 8/2/2006	CUSTOMER XDD Solutia	REV. -
CHECKED	DATE		
APPROVED	DATE	W.G. Krummerich Facility, Sauget, IL	
LAST DRAWN BY Admin	DATE 8/22/2011	SOURCE	PAGE 4 OF 4

LAST PLOTTED BY XXX DATE XXX