FINAL

LIGHT NON-AQUEOUS PHASE LIQUID RECOVERY

PILOT TEST WORK PLAN ADDENDUM

HARTFORD PETROLEUM RELEASE SITE

HARTFORD, ILLINOIS

July 19, 2013

Project #: 24S-003-001

PREPARED BY: Trihydro Corporation

2702 East Kemper Road, Cincinnati, OH 45241

SUBMITTED BY: Apex Oil Company, Inc.

8235 Forsyth Boulevard, St. Louis, MO 63105

Table of Contents

1.0 INTRODUCTION 1-1

1.1 Purpose 1-1

1.2 Background 1-2

2.0 SCOPE OF WORK 2-1

2.1 Baseline Measurements 2-2

2.1.1 Fluid Level Gauging 2-3

2.1.2 LNAPL Transmissivity 2-3

2.1.3 SVE Recovery Rates 2-4

2.2 Groundwater and LNAPL Extraction Well Installation 2-4

2.3 Recovery and Treatment Infrastructure 2-5

2.3.1 Groundwater and LNAPL Recovery 2-6

2.3.2 Groundwater Treatment 2-6

2.3.3 Discharge to Sewer 2-7

2.3.3.1 Shut-Down and Restart Criteria 2-8

2.3.4 Re-injection Into Production Well RW-002 2-8

2.3.4.1 Fluid Level Monitoring 2-10

2.3.4.2 Dissolved Phase Monitoring 2-10

2.3.4.3 Vapor Phase Monitoring 2-12

2.3.5 LNAPL Storage 2-13

2.3.6 Air Monitoring 2-13

2.3.7 Safety Shutdown and Contingencies 2-14

2.3.8 System Startup 2-15

2.4 Pilot Test Triggers 2-15

2.5 Step Test 2-16

2.6 Long Term Pumping Test 2-17

2.6.1 Anticipated Radius of Influences 2-17

2.6.2 LNAPL Transmissivity 2-19

2.6.3 SVE Recovery Rates 2-19

3.0 DATA EVALUATION 3-1

3.1 Production Well Performance 3-1

3.2 Hydraulic Conductivity and Transmissivity 3-1

Table of Contents (cont.)

3.3 Radius of Influence 3-1
3.4 LNAPL Recovery Rate 3-2
3.5 LNAPL Recovery Radius of Influence 3-2
3.6 LNAPL Transmissivity 3-2
3.7 SVE Recovery Rate 3-3
3.8 Enhanced Biodegradation Near the Re-Injection Well 3-3

4.0 DELIVERABLES 4-1
4.1 Pre-Notification 4-1
4.2 Status Reports 4-1
4.3 Reporting 4-1

5.0 REFERENCES 5-1

List of Tables

1. Pilot Test Monitoring Network

2. Treated Water Discharge Limits

3. Pilot Test Monitoring Network for Contingency Re-Injection at Production Well RW-002

List of Figures

1. Site Location Map
2. Pilot Test Infrastructure Layout
3. Conceptual Treatment Trains
4. Hydrograph for Monitoring Well HMW-044C
5. Hydrograph for Monitoring Well AWS-3
6. Hydrograph for Monitoring Well MPE-A003
7. Monitoring and Recovery Well Network
8. Proposed Re-Injection Well and Monitoring Network
9. Anticipated Radius of Influence for Focused Pumping

List of Appendices

A. SUB-SLAB VAPOR, INDOOR AIR, AND SOIL VAPOR FIELD SCREENING AND LABORATORY ANALYTICAL RESULTS FOR 507 NORTH OLIVE STREET

B. EQUIPMENT SPECIFICATIONS

1.0 INTRODUCTION

In response to a request from the United States Environmental Protection Agency (USEPA), Apex Oil Company, Inc. (Apex) is proposing to conduct an additional light-non-aqueous phase liquid (LNAPL) recovery pilot test using a focused pumping approach (the additional pilot test) within Area A of the Hartford Area Hydrocarbon Plume Site (See Figure 1 for depiction of Area A). The additional pilot test will be conducted pursuant to the Administrative Order unilaterally issued by the USEPA on July 20, 2010. During the additional pilot test, higher volume groundwater pumping (e.g., 200 to 300 gallons per minute [gpm]) will be conducted during unconfined water table conditions (groundwater generally below 400 feet above mean sea level [ft-amsl] beneath Area A) to enhance exposure of the smear zone within the Main Sand Unit, located between approximately 388 and 401 ft-amsl. It is anticipated that exposing deeper portions of the smear zone beneath Area A, which are typically submerged (between approximately 385 and 400 ft-amsl) may enhance LNAPL transmissivity and mobility, which will allow further recovery of LNAPL. In addition, exposing the smear zone present in the Main Sand Unit via focused pumping during low water table conditions may also facilitate increased vapor recovery and smear zone mass depletion through the existing soil vapor extraction (SVE) system. Although the additional pilot test will be conducted within Area A, pilot test results will be used to resolve gaps in the Conceptual Site Model (CSM). Specifically, the results of this pilot test will provide an understanding of LNAPL recoverability under current hydraulic conditions and will guide potential approaches and conditions under which LNAPL recovery can be optimized. The data collected during the pilot test will also be used to evaluate potential endpoints for future LNAPL recovery efforts. The pilot test results will be used to inform the CSM and may provide critical information for the overall remedial strategy for LNAPL, whether mobile or residual, as well as dissolved and vapor phase constituents that partition from the LNAPL.

1.1 PURPOSE

The primary objective of additional pilot testing is to assess the extent to which mobile LNAPL is recoverable in Area A under unconfined conditions via focused pumping. In addition, should the pilot test prove successful at increasing LNAPL transmissivity to within or above the agreed-upon range of LNAPL transmissivity end-points (between 0.3 and 0.8 square feet per day [ft^2/day]) for the pilot test and lead to significant recovery of additional LNAPL, results from this additional pilot test may be used to define operational criteria for future LNAPL recovery events using a focused pumping approach including:

- Location and design of groundwater production and LNAPL extraction wells based on smear zone morphology
- Radius of influence of focused pumping
- Target pumping rates
- LNAPL recovery approaches (e.g., single pumping well versus skimming across an extended well network)

- Groundwater elevation triggers for startup and shutdown of active pumping
- Water treatment and disposal infrastructure requirements
- Vapor treatment requirements at the thermal treatment units
- Endpoints for focused pumping

The results of the additional pilot test will be used to evaluate the degree to which LNAPL recovery beneath Area A is possible. If the focused pumping approach is not successful in increasing LNAPL transmissivity or mobilizing recoverable LNAPL beneath Area A, then data collected during this additional pilot test will be evaluated in the context of previous testing, natural depletion processes, and historical recovery efforts performed in the Village of Hartford (Village) and along the western boundary of the former Premcor refinery (currently owned and operated by the Valero Hartford Distribution Terminal [Valero]). Furthermore, if the additional pilot test is unsuccessful in this manner, Apex will consider the hydraulic conditions under which focused pumping could result in recovery of LNAPL, as well as other remedial approaches that would reduce petroleum hydrocarbon mass, dissolved and vapor phase concentrations, as well as plume longevity beneath Area A.

1.2 BACKGROUND

WSP Environmental & Energy (WSP) conducted a LNAPL recovery pilot test in Area A between October 2011 and January 2012 (the WSP pilot test) with the primary objective of evaluating previously selected technologies for LNAPL recovery including SVE, multiphase extraction (MPE), and dual phase extraction (DPE). As described in the *Light Non-Aqueous Phase Liquid Recovery Pilot Test Interim Report* (WSP 2012), groundwater and LNAPL were confined throughout most of the WSP pilot test. The selected technologies were unable to depress the water table below the top of the well screen and consequently unable to induce LNAPL recovery. The confining unit is roughly coincident with the top of the smear zone in the Main Sand Unit. Therefore, the WSP pilot test was modified during implementation to include pumping tests (maximum extraction rate of 25 gpm) to attempt to define extraction rates necessary to expose the smear zone under confined conditions. LNAPL recovery was not measurably improved using pumping rates up to 25 gpm.

Also as part of the WSP pilot test, LNAPL baildown testing was performed in three wells screened across the smear zone in the Main Sand Unit in October 2011 (under confined conditions) and again in January 2012 (as transient conditions were present and groundwater/LNAPL were transitioning to unconfined conditions). The LNAPL transmissivities estimated using the baildown test results from October 2011 under confined conditions were between 0.0005 and 0.04 ft^2/day. LNAPL transmissivities estimated in January 2012 under unconfined conditions were between

0.02 and 0.09 ft^2/day. These estimated transmissivities are below the agreed-upon LNAPL recovery endpoint range of 0.3 and 0.8 ft^2/day.

The WSP pilot test also supported the conclusion that MPE may not be a viable technology for LNAPL recovery (WSP 2012). Groundwater extraction rates using MPE are limited to between 2 and 3 gpm, which will not expose portions of the smear zone that have been largely submerged since early 2008 and where LNAPL saturations within the Main Sand Unit are hypothesized to be higher. MPE would therefore affect only the upper portions of the smear zone, even under unconfined LNAPL and groundwater conditions because of the limitations in groundwater extraction rates. As a result, the lower portions of the smear zone (from approximately 385 to 400 ft-amsl) that are typically submerged would be unaffected using MPE. Therefore, Apex is proposing to perform the additional pilot test under unconfined conditions to evaluate focused pumping as a potential alternative approach for LNAPL recovery beneath the Village, as well as to assess the viability of hydraulic pumping via other reasonable means (e.g., MPE, dual phase, focused pumping, etc.) as an approach for recovering mobile LNAPL.

The activities performed during the WSP pilot test were described in the *Light Non-Aqueous Phase Liquid Recovery Pilot Test Work Plan* (*Work Plan*, WSP 2011). This Addendum to the *Work Plan*, describes additional activities to test a focused pumping approach for additional LNAPL recovery. Many of the methods and analyses provided in the *Work Plan* (WSP 2011), such as LNAPL transmissivity testing, will be followed during the additional pilot test. This Addendum describes the infrastructure, routine and non-routine monitoring, data reduction, and reporting activities that were not described in the *Work Plan* (WSP 2011). The remainder of this Addendum is organized into the following sections:

- Section 2.0 – Describes the infrastructure, methods, and monitoring activities that will be conducted as part of the additional pilot test
- Section 3.0 – Presents the preliminary qualitative and quantitative analyses that will be utilized to evaluate the additional pilot test results
- Section 4.0 – Provides a summary of the deliverables that will be provided to the USEPA and the Illinois Environmental Protection Agency (Illinois EPA) during and following the additional pilot test

2.0 SCOPE OF WORK

This section details infrastructure requirements, as well as operations, maintenance, and monitoring activities that will be performed as part of the additional pilot test. This section also describes baseline monitoring and other activities that will be performed to assess the viability of a focused pumping approach to recover LNAPL beneath Area A. Several critical path actions must be completed prior to conducting the additional pilot test. If any of these critical path actions listed in the subsequent bullets cannot be met, the additional pilot test will be postponed until all actions are completed and the groundwater trigger elevations, described in Section 2.4, occur.

- Village of Hartford, Wood River Wastewater Treatment Plant (WRWTP), and/or Army Corps of Engineers approval to discharge all or a portion of the treated groundwater to (1) the combined Village sewer system, (2) the segregated stormwater conveyance system, and/or (3) an historical groundwater production well, by re-injection at an estimated combined flow rate of up to 300 gpm (these options are further discussed in Sections 2.3.3 and 2.3.4).
- Illinois EPA approval of the *Application for Permit for Construction/Operation Approval (WPC-PS-1*) allowing for generation, treatment, and discharge of groundwater associated with the additional pilot test (also discussed in Section 2.3.3).
- Completion of baseline measurements including fluid level gauging, LNAPL transmissivity testing, and assessment of baseline vapor recovery rates using the MPE and SVE wells in Area A (explained in Section 2.1). Approval for connecting the five MPE-series wells in Area A to the Hartford SVE system for the purpose of the additional pilot test has been granted by the USEPA via correspondence dated March 12, 2013. Groundwater conditions conducive to vapor extraction from MPE series wells (i.e., groundwater elevation less than 400 ft-amsl) will be necessary to conduct these baseline measurements.

Installation of the groundwater production well and LNAPL recovery well (described in Section 2.2) will not proceed until Apex receives approval to discharge treated groundwater. Apex is seeking approval from the Village and other relevant regulatory authorities for the discharge of groundwater to the segregated stormwater conveyance system or the combined sewer system, with the primary goal of discharging all the treated water to one of these two systems.

Based on discussions with the Village, there are two potential limitations to discharging groundwater to the combined sewer system at a rate of 300 gpm of treated groundwater: (1) the increased flow through the 10-inch force main to WRWTP may result in an increase in dynamic friction and resulting pressure drop greater than what the existing submersible pumps present in the Village lift station can handle, and (2) there may be peak periods of sewer water generated from residential activities during which the combined flows exceed the capacity of the Hartford Lift Station screw pumps and submersible pumps moving water through the sewer system. As the additional pilot discharge would

result in an exceedance of the daily maximum currently permitted by the WRWTP, Apex would negotiate a separate agreement with the City of Wood River to allow a temporary increase in flow from Hartford during the additional pilot test.

The segregated stormwater conveyance system reportedly has ample excess capacity to accommodate discharge from the additional pilot test; however, the system currently services West Hartford only, and the primary identified obstacle to transmitting water into this conveyance system is the railway that runs along North Market Street. Apex is working with the Village to locate existing, unused pipelines, which may cross the railway corridor. If located, Apex will coordinate with the Village to utilize these pipelines to convey treated water from Area A to the existing stormwater system.

If limitations in either infrastructure or system capacity are identified in one or both of these systems, then Apex will evaluate the option of splitting discharge of the treated groundwater between these two systems.

Apex will also seek approval and permits from Illinois EPA for re-injection of treated groundwater into the historical groundwater production well RW-002 as a contingency for managing treated groundwater during the pilot test. Re-injection of treated groundwater will be performed only if it is not possible to discharge water to the Village segregated storm sewer or the combined sewer systems. Prior to utilizing RW-002 for treated groundwater re-injection, the well will be registered with the Illinois IEPA Bureau of Land as a Class V Injection Well under the Underground Injection Control (UIC) Program. Also under this option, subgrade piping would be installed along North Olive Street (and the affected portions of the street resurfaced) to convey discharge to RW-002 during the pilot test. Additional criteria that must be met in order to utilize RW-002 for re-injection are discussed in Section 2.3.4.

Upon approval of this Work Plan Addendum by the USEPA, baseline monitoring including fluid level gauging, LNAPL transmissivity testing and assessment of baseline vapor recovery rates using the MPE and SVE wells in Area A will begin when groundwater is below trigger elevations beneath Area A (described in Section 2.4).

2.1 BASELINE MEASUREMENTS

The additional pilot test will evaluate localized groundwater depression and resulting effects on LNAPL recoverability. This is essentially a comparison between the amount of LNAPL removed during non-stressed and stressed conditions, so baseline data will be needed to characterize Area A prior to initiation of the additional pilot test. Baseline data includes fluid level gauging, measurements of LNAPL transmissivity, and evaluating vapor recovery rates using the existing SVE and MPE-series wells located in and around Area A. If re-injection, as the contingency option, must be

pursued, baseline water quality data will also be collected from groundwater monitoring wells situated near production well RW-002 to assess the effects of re-injection on the dissolved phase conditions beneath this portion of Hartford.

2.1.1 FLUID LEVEL GAUGING

Focused pumping will lower water table elevations beneath Area A and could potentially affect the lateral distribution and thicknesses of LNAPL within the radius of influence of the production well. To characterize these conditions prior to focused pumping, fluid levels will be gauged in the wells listed on Table 1. This gauging will be conducted weekly (over a minimum of two weeks) prior to initiation of focused pumping. In addition, transducers will be installed in select wells in the monitoring network identified in Table 1. The transducers will be set to record the piezometric surface elevation every eight hours within the given well for at least one week prior to initiation of focused pumping, and the measurements will continue on this same frequency during implementation of the additional pilot test.

2.1.2 LNAPL TRANSMISSIVITY

As stated in Section 1.1, the primary objective of the additional pilot test is to assess the potential for LNAPL recoverability in Area A, as portions of the smear zone that have been submerged beneath the water table since early 2008 are exposed via focused pumping (Figures 4 through 6). LNAPL transmissivity provides an estimate of the recoverability of LNAPL in the formation adjacent to a well. LNAPL transmissivity can be estimated via baildown testing, a manual skimming test, and/or during dedicated LNAPL recovery (ASTM 2011). To assess pre-test LNAPL recoverability, LNAPL transmissivities will be measured in and around Area A prior to initiation of groundwater extraction. The field method for this baseline monitoring will be baildown/slug testing or skimming tests. Monitoring wells within and situated near Area A with screen intervals that extend across the smear zone within the Main Sand Unit will be slated for baildown or skimming tests, if the LNAPL is unconfined and the gauged LNAPL thickness exceeds 0.5 foot.

Baildown testing will be performed in those wells where groundwater elevations vary by no more than 20% of the maximum anticipated LNAPL drawdown throughout the week (i.e., steady or quasi-steady state conditions) preceding the transmissivity testing (ASTM 2011). This will be determined using pressure transducer and manual fluid level measurements over the course of one week prior to testing. If this condition is not met, then skimming tests will be performed instead. LNAPL baildown and skimming tests will follow protocols presented in Appendix D of the *Work Plan* (WSP 2011), as well as the *Standard Guide for Estimation of LNAPL Transmissivity* (ASTM 2011).

2.1.3 SVE RECOVERY RATES

It is anticipated that over the course of the additional pilot test, the rate of volatilization and recovery of volatile petroleum hydrocarbons in soil vapor via the existing Hartford SVE system may increase. Prior to implementation of focused pumping, vapor recovery will be initiated in the SVE and MPE wells located in and surrounding Area A (Figure 7), in order to establish the baseline rate of volatile hydrocarbon recovery. Field screening of total organic vapor and fixed gases will be performed daily for up to three weeks prior to initiating focused pumping in the SVE and MPE wells listed on Table 1. Field screening will be performed in accordance with the procedures presented in Appendix D of the *Work Plan* (WSP 2011).

2.2 GROUNDWATER AND LNAPL EXTRACTION WELL INSTALLATION

After the critical path actions listed above have occurred, a new groundwater production well (HPW-01) will be installed and screened across the lower portions of the Main Sand Unit. This new production well is proposed to be located between 309 and 313/315 North Olive Street, approximately 30 feet west of Olive Street (Figure 2). Prior to well installation, a pilot boring (approximate 2-inch diameter) will be advanced using a direct push methodology and continuous cores collected, logged, and field screened for total organic vapors to a total depth of 75 feet below ground surface (ft-bgs). Select intervals from the soil core may be submitted for laboratory analysis of volatile petroleum hydrocarbons (USEPA Method 8260), semivolatile petroleum hydrocarbons (USEPA Method 8270), and total petroleum hydrocarbons (USEPA Method 8015). Following installation of the pilot boring, a 16-inch diameter boring will be drilled to a total depth of 75 ft-bgs and a 16-inch diameter temporary outer steel casing will be advanced to a depth of 30 ft-bgs to prevent entrainment of near-surface finer grained sediments during well installation activities.

Following completion of the boring to the total depth, a 10-inch diameter continuous wrapped stainless steel screen (0.10-inch slot size) will be set from approximately 70 ft-bgs to 50 ft-bgs. A five-foot section of blank 10-inch steel casing will be set below the screen interval to act as a sump. Blank 10-inch diameter steel casing will be set from the top of the screen to approximately two feet above the ground surface. A No. 3 gravel pack will be placed from the bottom of the screen interval to approximately 47.5 ft-bgs. A 2.5-foot bentonite seal will be placed from the top of the sand pack to 45 ft-bgs. A concrete-bentonite grout will be placed above the bentonite seal to the ground surface.

In addition, a LNAPL recovery well (HLRW-01) will be installed in the upper portions of the Main Sand Unit and screened across the smear zone. The recovery well will be located approximately 10 feet east of proposed production well HPW-01. A 10-inch diameter boring will be drilled to a total depth of 45 feet below ground surface (ft-bgs). Following completion of the boring to the total depth, a 6-inch diameter continuous wrapped stainless steel screen (0.10-inch slot size) will be set from 45 ft-bgs to approximately 25 ft-bgs. Blank 6-inch diameter steel casing will be

set from the top of the screen to approximately two feet above the ground surface. A No. 3 gravel pack will be placed from the bottom of the screen interval to approximately 22.5 ft-bgs. A 2.5-foot bentonite chip seal will be placed from the top of the sand pack to 20 ft-bgs. A concrete-bentonite grout will be placed above the bentonite seal to the ground surface.

Following installation, the groundwater production well will be developed via bailing, surging, and over-pumping until the recovered groundwater is free of fines introduced during installation of the boring and construction of the well. Soil cuttings and development water will be contained, tested for hazardous characteristics, and disposed in accordance with applicable regulations.

2.3 RECOVERY AND TREATMENT INFRASTRUCTURE

Groundwater and LNAPL will be extracted from wells HPW-01 and HLRW-01, respectively, and processed through separate treatment trains as shown schematically on Figure 3. Equipment includes a submersible groundwater pump, LNAPL-seeking recovery pumps, settling tanks, transfer pumps, bag filters, an organoclay vessel, a granular activated carbon (GAC) vessel, and LNAPL storage tanks. LNAPL extraction pump(s), controls, and the master control panel will be intrinsically safe. Groundwater production well HPW-01 will be screened below the bottom of smear zone and the pump will be placed at the bottom of the production well. Although not exposed to hydrocarbon vapors, this pump will be controlled with an intrinsically safe pressure transducer in a manner that ensures the pump motor and intake are submerged.

Recovery and treatment infrastructure will be generally arranged as shown on Figure 2, with security fencing surrounding all components as a safety measure. LNAPL storage tanks will be located and inspected prior to use in accordance with the Illinois State Fire Marshal requirements (e.g., appropriate offset distances from structures and roadways) and will be protected using jersey barriers, in addition to being located behind temporary security fencing. Nuisance sound levels resulting from system operation are not anticipated because: (1) the highest capacity pump (used for groundwater extraction), as well as the LNAPL recovery pump(s) will be installed down-well, and (2) the lower capacity above-ground transfer pumps will be electrically powered, and therefore will not generate substantive noise levels. Operations, maintenance and monitoring activities performed as part of the pilot test will be conducted during normal working hours (approximately 9 AM to 6 PM), unless unexpected events (e.g., a pump failure) occur. Additionally, nuisance odors and volatile emissions will be minimized during the pilot test by making use of (1) closed versus open vessels within the treatment train, (2) electrical versus diesel powered transfer pumps, and (3) emissions controls on the LNAPL storage tanks. A review of Illinois regulations and an estimate of potential emission rates indicate that the temporary treatment system will not require an air discharge permit but is eligible for registration

under the Illinois EPA Registration of Smaller Sources (ROSS) program. Monitoring of ambient air quality will be performed at the start-up of the pilot test (Section 2.3.6) and appropriate recordkeeping procedures will be followed to demonstrate compliance with the ROSS program and to evaluate future air permitting requirements.

Product documentation for key pieces of equipment is provided in Appendix B. The proposed approximate location of these primary pieces of equipment is shown on Figure 2 and described in detail below.

2.3.1 GROUNDWATER AND LNAPL RECOVERY

Groundwater will be extracted from production well HPW-01 at flow rates up to 300 gpm using a 6-inch diameter, 15 horsepower submersible pump (Grundfos 300S™ or similar) controlled by a variable frequency drive (VFD). The VFD will allow for establishing variable flow rates as needed for the proposed step test, described in Section 2.5. The top of screen for the groundwater extraction well will be placed approximately 10 feet below the bottom of the smear zone to prevent introduction of LNAPL and minimize dissolved phase loading into the groundwater treatment train.

LNAPL will be recovered from a separate, dedicated recovery well (HLRW-01) screened across the smear zone within the Main Sand Unit. Clean Earth Technology, Inc. Magnum Spill Busters™ will be used to extract and convey LNAPL to storage tanks. The Spill Buster™ is an LNAPL pumping system, which employs an auto-seeking device that allows the pump intake to automatically track the elevation of the LNAPL/water interface as it fluctuates, which will maximize LNAPL gradients and recovery over the course of the additional pilot test.

2.3.2 GROUNDWATER TREATMENT

Groundwater extracted with the submersible pump will initially be passed through a 21,000-gallon frac tank for gross sediment settling. Using a skid-mounted transfer pump, frac tank effluent will be transferred to an 18,100-gallon weir tank to promote additional settling and separation of oil (if present). Weir tank effluent will then be passed through a set of four 4-inch diameter, 10-micron bag filters to filter out fine particulates. Following bag filtration, groundwater will be passed through a 10,000-pound vessel containing organoclay (Hydrosil International HS-200 Series), in order to adsorb dissolved petroleum-related constituents and lead (if present). A review of historic groundwater analytical data for samples collected from monitoring wells located in and near Area A and screened within the Main Sand indicate low (typically non-detect) lead concentrations in groundwater; therefore, lead is not expected to be present at concentrations above the anticipated discharge limit. Nevertheless, organoclay media, which is capable of adsorbing both organic constituents and lead, will be used in place of GAC, as a contingency measure. Finally, groundwater will be passed through another 10,000-pound vessel containing GAC to further reduce dissolved phase petroleum-related constituents if present, as a final polishing step.

A sample port (SP-1) will be installed between the two vessels and treated water samples will be collected to assess if breakthrough of dissolved phase constituents from the organoclay vessel is occurring. A second sample port (SP-2) will be installed following the final GAC vessel and samples will be collected to document compliance with discharge limits established by the Illinois EPA following submittal of the *Application for Permit of Construction/Operation Approval*. Samples will be collected at the start of the pilot test and weekly thereafter and submitted for laboratory analysis. Specific analytes and discharge limits will be defined based on the water management option that is utilized during the pilot test. Based on historic permits issued during prior pilot studies conducted in Area A analytes will include benzene, toluene, ethylbenzene, total xylenes, acenaphthene, acenaphthylene, anthracene, benzo(a)anthracene, benzo(a)pyrene, 3,4-benzofluoranthene, benzo(ghi)perylene, benzo(k)fluoranthene, chrysene, dibenzo(a,h)anthracene, fluoranthene, fluorine, indeno(1,2,3-cd)pyrene, naphthalene, phenanthrene, pyrene, total arsenic, and total lead. Table 2 summarizes analytes and discharge limits for the three water management options. Samples collected from the second sample port (SP-2) will also be analyzed for general water quality parameters including biological oxygen demand and chemical oxygen demand.

Organoclay and GAC media will be replaced, if necessary, based on the analytical results. By monitoring dissolved phase constituent concentrations between the two vessels (sample port SP-1), the organoclay media can be replaced, if breakthrough of dissolved phase constituents occurs. In the event that constituents are measured above the discharge limits within the sample collected from sample port SP-1, additional treatment of the groundwater will occur within the GAC vessel prior to discharge to Village sewers or, if necessary, re-injection into the smear zone. The 10,000-pound GAC vessel is capable of adsorbing approximately 500 pounds of petroleum hydrocarbons, which should be adequate to prevent excursions while samples collected during weekly monitoring events are analyzed and reviewed.

2.3.3 DISCHARGE TO SEWER

Following treatment, the primary option for managing the groundwater is via discharge to the Village's combined sanitary and stormwater sewer system or the segregated stormwater conveyance system (pending confirmation from the Village, as well as completion of necessary permits and agreements). If necessary due to conveyance limitations, treated water may be discharged to a combination of the two systems. The groundwater will be discharged to a Village-approved location, potentially within the alleyway west of North Olive Street, as shown on Figure 2. An *Application for Permit of Construction/Operation Approval* containing details regarding the proposed pilot test, groundwater treatment process, as well as approvals from the Village and WRWTP will be submitted to the Illinois EPA prior to conducting the additional pilot test. In addition, an *Application for Sanitary Sewer Service Connection* will be submitted to the Village. Outreach to the Village and WRWTP to obtain approvals and to clarify the Village's

conveyance system limitations is ongoing. In addition, a draft agreement with the City of Wood River is being drafted to allow discharge of treated water to the WRWTP during the pilot test.

2.3.3.1 SHUT-DOWN AND RESTART CRITERIA

Groundwater pumping associated with the pilot test will be temporarily terminated during certain triggering events such as high groundwater table conditions following periods of high rates of precipitation or during elevated river stage conditions when the combined sewer system and the stormwater conveyance system may have reduced capacity. In those circumstances, pumping will be terminated if precipitation exceeds (or is anticipated to exceed) more than 0.5 inches in a 24-hour period or if the river exceeds 410 ft-amsl at Lock and Dam No. 26. Focused pumping will resume 48-hours following a high intensity precipitation event or return of the river below 410 ft-amsl, after contacting the Village, WRWTP, and/or the Army Corps of Engineers to ascertain if the sewer and treatment facility capacity has been sufficiently restored to accommodate groundwater conveyance associated with the pilot study.

Additionally, as discussed in Section 2.3.2, the pilot test will be temporarily discontinued, if there is a confirmed exceedance of dissolved phase constituents in the effluent samples collected from sample port SP-2 following treatment of extracted groundwater and discharge to the sewer. Treated groundwater samples will be collected weekly following system startup to assess compliance with discharge limits established by the Illinois EPA as part of the *Application for Permit of Construction/Operation Approval*. Weekly sampling will be conducted to identify the replacement schedule for the organoclay media to avoid breakthrough of dissolved phase constituents to the GAC vessel. However, in the event that analytical results indicate an exceedance of the Illinois EPA discharge limits following treatment, groundwater pumping will be temporarily terminated, the system will be inspected, and any issues will be identified and addressed, including exchange of media if necessary. Upon identification and rectification of the treatment problem, the groundwater extraction will recommence and weekly sampling continued.

2.3.4 RE-INJECTION INTO PRODUCTION WELL RW-002

Only in the event that treated water cannot be discharged to the Village combined sewers or the separate stormwater conveyance system, then extracted groundwater will be re-injected into the smear zone in the Main Sand Unit using the historic production well RW-002, in accordance with Illinois EPA Bureau of Land requirements for a Class V Injection Well. Production well RW-002 is one of three 30-inch diameter production wells installed by Clark Oil in the 1970s that were used to recover LNAPL from beneath the Village, and is located approximately 650 feet north of the location of the proposed pilot test in Area A

Prior to re-injection, production well RW-002 will be rehabilitated to (1) evaluate the current condition of the well, (2) improve the steady state injection capacity, and (3) quantify the rate at which production well RW-002 can accept water while documenting the effects in the surrounding monitoring network. The production well will be rehabilitated by mechanically developing the screened interval using a surge block and brushes, high-pressure jetting of the screened interval, and over-pumping of the well to remove accumulated fines. Following rehabilitation, the injection capacity will be tested by injecting potable water starting at a rate of 50 gpm for one hour, followed by 100 gpm for one hour, 200 gpm for one hour, and finally 300 gpm for four hours. Re-injection within the production well will be considered viable if:

- Injected water does not back up and overtop the production well (i.e., injection under pressure is not necessary).
- The groundwater elevation and rate of rise do not result in a rapid increase in pressure, total organic vapor, or methane concentrations measured in the monitoring points or nested vapor monitoring wells near the production well or within the sub-slab vapor probes installed in the nearest residence, 507 North Olive Street (located approximately 50 feet southeast of the production well), such that a completed pathway for petroleum vapor intrusion may occur with respect to this structure.
- LNAPL thickness within the wells included in the monitoring network does not increase by more than 0.5 feet above the baseline measurements prior to re-injection. Such an increase in LNAPL thickness may indicate potential mobilization of LNAPL, unless confined LNAPL conditions occur as a result of re-injection.

In the event that any of the above criteria are not met when injecting at a rate of 300 gpm, then the rate may be reduced in a step-wise fashion to identify the greatest acceptable injection rate that can be sustained while meeting all of these criteria. Development of a multi-phase mass transport model to predict the effects on LNAPL mobility, as well as vapor and dissolved phase partitioning, was considered. However, multi-phase transport models can be difficult to develop and are frequently inaccurate based on sensitivity to critical parameters (e.g., hydraulic conductivity, relative LNAPL permeability, vapor diffusion coefficients, dispersivity, and convergence factors) that are difficult to define, especially at sites with significant subsurface heterogeneity.

As a more definitive approach for determining potential effects of re-injection, frequent empirical data collection prior to and during re-injection will be performed to track changes in the LNAPL, dissolved phase, and vapor phase mobility during the pilot test. The baseline and routine monitoring activities that will be performed during re-injection (including the rehabilitation and injection rate tests) are described in the following subsections. These baseline and routine monitoring activities described in Sections 2.3.4.1 through 2.3.4.3 will only occur if re-injection, as the contingency water management option, must be pursued.

2.3.4.1 FLUID LEVEL MONITORING

It is expected that re-injection of treated water will locally increase the water table within the Main Sand, which will submerge the LNAPL smear zone near the injection well. Under this condition, it is anticipated that LNAPL will have reduced mobility relative to baseline conditions, in proximity to well RW-002. Fluid levels within the production well and surrounding monitoring network listed on Table 3 will be gauged hourly during re-injection, in order to assess the infiltration capacity as part of the rehabilitation of production well RW-002. If re-injection is used for treated water management during the pilot test, fluid levels will be manually measured the day prior to and semiweekly during re-injection activities to assess LNAPL thicknesses near the injection well. In addition, pressure transducers will be placed within selected wells (HMW-034, HMW-035, MP-042C, RW-002, and RW-005) and set to record measurements every 10-minutes at least one week in advance of injecting potable or treated water into well RW-002. The transducer measurements will be used to assess changes in hydraulic gradients during re-injection.

Fluid level monitoring results will be used in combination with the dissolved phase monitoring results, discussed in the following subsection, to assess hydrocarbon flux and changes in natural attenuation processes within the saturated zone resulting from re-injection. If LNAPL thickness within wells in the monitoring network listed on Table 3 increase by more than 0.5 feet above the baseline measurements prior to re-injection, then the USEPA will be consulted regarding the results and the appropriate response, which may include reducing groundwater recovery and re-injection rates or termination of the pilot test. Otherwise, fluid level monitoring data will be provided to the USEPA and Illinois EPA in weekly status reports to evaluate the response of re-injection near production well RW-002.

2.3.4.2 DISSOLVED PHASE MONITORING

In addition to submerging exposed LNAPL, re-injection of treated groundwater is also expected to affect LNAPL partitioning and attenuation rates within the saturated zone. Prior to any re-injection activities, groundwater is likely at equilibrium with the LNAPL within the smear zone, such that dissolved phase concentrations of petroleum-related constituents, such as benzene, are near the effective solubility limits. Re-injected water will be treated and depleted of petroleum hydrocarbons, so once in contact with the smear zone, hydrocarbons will partition from the LNAPL to the treated water. If this process reaches equilibrium conditions, then the dissolved-phase concentrations during re-injection will be similar to those prior to injection, which would indicate that hydrocarbon depletion processes within the smear zone have been accelerated.

Furthermore, re-injected water will have a higher assimilative capacity than ambient groundwater due to the presence of electron acceptors (e.g., dissolved oxygen) and absence of biodegradation products (e.g., methane). Concentration of dissolved oxygen and other electron acceptors within the extracted groundwater will increase during treatment,

which involves passing the groundwater through multiple settling tanks where the contact time of groundwater with atmospheric air will increase. Re-injecting this treated groundwater will likely alter geochemical parameters within and around the injection well in a manner that will stimulate petrophyllic bacteria within the saturated zone. Ultimately, this may increase natural depletion rates within the saturated zone near the injection well.

To evaluate any change in the biodegradation rate associated with re-injection, groundwater from a transect of wells near RW-002 (Table 3 and Figure 8) will be sampled one week prior to and biweekly during re-injection and analyzed for the following field and laboratory parameters:

- Dissolved Oxygen (using down-hole snapper, if possible, to improve reliability of result)
- ORP (field meter)
- pH (field meter)
- Sulfate (USEPA 300.1)
- Nitrate/Nitrite (USEPA 300.1)
- Carbonate/bicarbonate (SM 2320B)
- Ferrous iron (SM 3500)
- Methane (RSK-175M)
- Benzene, toluene, ethylbenzene, total xylenes, and methyl tert butyl ether (USEPA 8260B)

Groundwater samples will also be collected from the production well HPW-01 and from the treatment system effluent (sample port SP-2) for comparative purposes. Groundwater monitoring within the network near production well RW-002 will extend for six months following completion of the pilot test to evaluate the decrease in electron acceptor concentrations and the associated reduction in assimilative capacity that is anticipated after re-injection is terminated.

The analytical results from the baseline sample will be compared to concentrations measured following re-injection of treated groundwater. This data will be used both quantitatively and qualitatively to evaluate biodegradation processes and smear zone depletion rates based on the increase in the volume of water flowing through the smear zone and the increased assimilative capacity within the injected water. Baseline geochemical results may also be used to evaluate potential anti-fouling agents (e.g., sequestering agents, short-lived biocides, etc.) that may be necessary if future implementation of the final remedy for LNAPL recovery beneath the Village would entail re-injection of treated groundwater within the smear zone over a longer period.

If analytical results for samples collected during the pilot test indicate an order of magnitude increase in dissolved phase hydrocarbon concentrations within an individual well or undue migration due to advection, then the USEPA will be consulted regarding the results and the appropriate response, which may include reducing groundwater recovery and re-injection rates or termination of the pilot test. Otherwise, dissolved-phase analytical results, as available, will be provided to USEPA and Illinois EPA in weekly status reports to evaluate the response of re-injection near production well RW-002.

2.3.4.3 VAPOR PHASE MONITORING

Production well RW-002 is approximately 50 feet from the nearest residential structure, located at 507 North Olive Street. Elevated vapor concentrations have been measured in the nested vapor monitoring wells, monitoring points, and sub-slab probes installed adjacent to and beneath 507 North Olive Street (Tables A-1 through A-3 in Appendix A) since monitoring began in 2004. As shown on Table A-3, total organic vapor measurements have not exceeded the action level of 350 parts per million by volume (ppmv) in the sub-slab soil vapor probes or 10 ppmv in indoor air during routine weekly monitoring events performed since April 2012. This includes monitoring conducted during the four river stage triggered monitoring events (EBMP-15 through EBMP-18) conducted in 2013 (Figure A-1). As shown in Table A-4, butane and/or isopentane were typically detected above the indoor air comparison levels within 507 North Olive Street during monitoring performed between February 2004 and July 2007. There were not any petroleum-related constituents detected above the comparison values within indoor air during the nine sample events performed between October 2007 and January 2010. Indoor air concentrations exceeded the comparison values for total trimethylbenzenes and isopentane during the sampling conducted in September 2010. However, constituents were not reported above the comparison values in indoor air samples during the most recent sample events performed in May 2011 and April 2012. It should be noted that mitigation measures, including a sub-slab depressurization system, are currently operating within this residence.

If re-injection of treated water must be explored as a contingency water management option, routine monitoring will be performed prior to and during re-injection to confirm that volatile petroleum-related constituents are not migrating into indoor air within 507 North Olive Street. Baseline monitoring will include collecting pressure (or vacuum), total organic vapor (measured using flame ionization detector [FID]), and fixed gas concentrations (measured using a Landtec GEM 2000 or similar) at vapor monitoring probes VP-001 through VP-003, VP-004S, VP-004M, and VMP-090S, one day prior to initiating re-injection of potable or treated groundwater. These monitoring probes are located approximately 10 feet from the nearest edge of the structure at 507 North Olive Street. Field screening will be performed within these soil vapor monitoring probes hourly as part of testing the injection capacity of well RW-002 following rehabilitation activities. If re-injection is used as the water management option during the LNAPL recovery

pilot test, then field screening within these soil vapor monitoring probes will be performed semiweekly during the Area A LNAPL recovery pilot test.

Furthermore, pressure, total organic vapor, and fixed gases will be measured in the sub-slab vapor probes installed within the structure at 507 North Olive Street at the start and conclusion of redevelopment activities. During re-injection, weekly field screening of indoor air and sub-slab vapor probes will be performed in accordance with routine in-home monitoring activities. If total organic vapor concentrations measured beneath the structure exceeds 350 ppmv or indoor air concentrations exceed 10 ppmv, then sub-slab soil vapor and indoor air samples will be collected using certified clean passivated summa canisters and submitted for laboratory analyses of volatile petroleum-related constituents using USEPA Method TO-15.

If petroleum-related constituents are measured in indoor air above the comparison values, and the source of the volatile constituents is attributed to petroleum vapor intrusion triggered by re-injection activities, then the USEPA will be consulted regarding the results and the appropriate response, which may include reducing groundwater recovery and re-injection rates or termination of the pilot test.

2.3.5 LNAPL STORAGE

LNAPL recovered from well HLRW-01 will be transferred to a set of 1,000 gallon, double-wall storage tanks (Modern Welding Company Ultra Lube Cube®), which provide UL-listed integral secondary containment. As shown on Figure 2, the LNAPL storage tanks will be positioned east of the recently demolished structure at 313 North Olive Street. LNAPL storage tanks placed in this location provide for a buffer of over 100 feet to the closest inhabited residence and are situated more than 20 feet from the property boundary. A set of jersey barriers or similar structural impediments (e.g., bollards) will be placed around the LNAPL storage tanks, and the entire area will be surrounded by security fencing as shown on Figure 2. The LNAPL storage tank vents will be fitted with carbon canisters to mitigate the release of volatile organic compounds to the atmosphere. LNAPL discharge piping to the two storage tanks will be in parallel with necessary valves to allow product collection in one tank while transferring recovered LNAPL from the other tank into a tanker truck. Recovered LNAPL will be transported in batches via tanker truck to a neighboring refinery or recycling center, as needed. An inspection by the Village of Hartford Fire Marshal and permitting through the Illinois Fire Marshal will be completed prior to initiating the pilot study.

2.3.6 AIR MONITORING

The effect of additional LNAPL recovery pilot testing on ambient air quality in the Village will be assessed via collection of ambient air samples at one upwind (i.e., background) and one downwind location relative to Area A, as

defined at the time of sample collection. Ambient air samples will be collected using passivated Summa canisters. Samples will be submitted to the laboratory for analysis of volatile petroleum-related constituents using USEPA Method TO-15LL, which yields reporting limits approximately one-fifth of that provided via the standard TO-15 method. During the first week of pilot test operations, ambient air samples will be collected using 24-hour flow controllers over three separate days and the ambient air samples will be submitted for laboratory analysis with a 24-hour expedited turnaround time for results. If the results indicate that there is not a significant difference in the upwind and downwind samples (i.e., RPD is less than 25%) during the first week of the pilot test, then ambient air samples will be collected weekly thereafter. The weekly samples will be collected over a 72-hour period and results will be requested on a five-day expedited turn-around time.

If volatile petroleum hydrocarbons measured in the downwind ambient air samples are significantly higher than the upwind samples (i.e., RPD is greater than 25%) and the difference is not related to laboratory errors, then leak detection monitoring will be conducted using a flame ionization detector in order to identify and repair the source of volatile emissions. If the source cannot be identified, then the pilot test will be discontinued until the emissions source can be resolved. If such a shut-down is necessary, then air monitoring will resume following restart of the pilot test in accordance with the schedule and procedures described in the previous paragraph (i.e., three times during the first week followed by weekly thereafter).

2.3.7 SAFETY SHUTDOWN AND CONTINGENCIES

As indicated on Figure 3, all electrical equipment will be wired to a central control panel with safety-shutdown control logic designed to deactivate the entire system in the event of a potentially unsafe condition (e.g., tank overfill, pump failure, etc.). In the event of a power failure, the groundwater extraction, LNAPL extraction, and tank transfer pumps will be deactivated. The central control panel will require a manual restart following a power outage, and equipment will be inspected by a competent technician prior to restart.

Any residual water within the organoclay and GAC vessels and piping will continue to be treated prior to discharge via gravity flow. Wellhead check valves will prevent drainage of fluids back into the groundwater and LNAPL extraction wells. In the event of a transfer pump failure, high-level sensors within the frac and weir tanks will trigger a safety shutdown of the entire system. Similar high-level sensors within the LNAPL storage tanks, when triggered, will deactivate the entire system.

Sensitive electronic equipment (e.g., VFD, motor starters, and central control panel) will be housed within an enclosed structure (311 North Olive Street) to prevent potential damage resulting from inclement weather. Should system

components require maintenance during the additional pilot test, the system will be deactivated at the central control panel and de-energized at the service disconnect prior to conducting maintenance activities.

2.3.8 SYSTEM STARTUP

The Village and adjacent residents will be notified a minimum of one week in advance of field construction work. In the event that installation of groundwater and LNAPL recovery wells, security fencing, and other components precede active pumping and LNAPL recovery by several months, these will be considered discrete field activities and separate notifications will be issued. After the pilot system is assembled, but prior to activation, the Village of Hartford Fire Marshal will be contacted and allowed to perform a comprehensive fire safety inspection to become familiar with the system operation. Material safety data sheets and emergency shutdown procedures will be reviewed with the Fire Marshal during this meeting.

Initial startup of the pumping system will be performed in a manner that allows for confirmation of adequate treatment prior to discharging any water to the sewer system or re-injection into well RW-002. To accomplish this, the frac tank will be temporarily bypassed and used as a final fill tank for post-treated water. Water will be pumped at approximately 50 gpm (rate of the first interval of the step test) for an eight-hour period or until the frac tank is substantially full. Treated groundwater samples from the frac tank will be collected and submitted under rush turnaround time for analysis of select petroleum-related constituents listed in Section 2.3.2. Upon receipt of analytical data demonstrating treatment in accordance with Illinois EPA standards, the frac tank contents will be discharged and the treatment train re-plumbed as shown in Figures 2 and 3, after which step testing will commence as described in Section 2.5.

2.4 PILOT TEST TRIGGERS

The additional pilot test activities are technically appropriate only if unconfined conditions are present within the Main Sand Unit beneath Area A. This will be evaluated by comparing baseline fluid level measurements within a set of three key wells (the trigger wells) to the bottom of the clay or silt confining unit observed during installation of the well (the trigger elevation). The trigger elevation will be 400 ft-amsl in trigger wells ASW-3, HMW-044C, and MPE-A003. Groundwater elevations must be below these trigger elevations in at least two of the trigger wells prior to conducting baseline monitoring and initiating focused pumping. Once initiated, pumping will continue for a minimum period of 60 days or until groundwater elevations are measured above the trigger elevation within two of the three trigger wells.

In addition to these groundwater elevation triggers, focused pumping will have to comply with limitations within the combined sewer system, stormwater conveyance system, and/or the re-injection well. The sewer system capacity is

constrained if there is a large influx of stormwater during rainfall events or when the Mississippi River stage is elevated. As a result, focused pumping will be discontinued in accordance with precipitation limits or river stage limits, as described in Section 2.3.1.

Re-injection will also need to be discontinued if routine monitoring results indicate mobilization of LNAPL, an increase or migration of dissolved phase hydrocarbons, or the potential for vapor intrusion near production well RW-002, if re-injection is used as the contingency water management option (as described in Section 2.3.4). The additional pilot test will also be discontinued if ambient air quality results indicate elevated volatile emissions from the treatment system or LNAPL storage tanks that cannot be remedied (Section 2.3.6). Finally, the pilot test may be discontinued if the Village requests termination of focused pumping due to problems associated with operations (e.g., sanitary sewer backups within residential or commercial structures, unacceptable odors, etc.).

If none of these shutdown criteria results in early termination of the additional LNAPL recovery pilot test, then focused pumping will be concluded following 60 days. However, in the event that LNAPL recovery beneath Area A can be sustained at a rate above 700 gallons per day, then focused pumping may continue until such a time that LNAPL recovery decreases to a rate below 700 gallons per day over a five-day period (excluding operational issues) or groundwater elevations within the trigger wells in Area A rise above 400 ft-amsl.

2.5 STEP TEST

Focused pumping will begin with a short-term step test to estimate the sustainable flow rates and the head loss coefficient within the new production well HPW-01. The step test will be comprised of short time segments (e.g., less than one hour) during which water is extracted at a constant rate, followed by a “step” up to the next rate. The exact rates extracted during each step will be determined based on observations once the new production well is installed and developed. For purposes of this Work Plan Addendum, the preliminary steps are planned to be 50, 100, 150, 200, 250, and 300 gpm. The duration of each step will be based on measurements in the field.

Specifically, the drawdown for a given groundwater extraction rate will be tracked via manual gauging, with the change in drawdown over time expected to be steep when the given extraction rate is first initiated. As the drawdown versus time begins to “flatten” (i.e., the change in drawdown over time becomes small relative to the beginning of the step), this will indicate the end of the step and the extraction rate will be increased to the next step. To facilitate this evaluation, the fluid level measurements will be plotted over time as the data is collected.

The groundwater extraction rate for each step will be measured using an in-line flow meter. Groundwater elevations in the production well will be measured using both an interface probe and a pressure transducer. In addition, the drawdown will be tracked using pressure transducers in the monitoring wells indicated on Table 1. Pressure transducers will record groundwater elevations on 5-minute intervals to evaluate drawdown and well efficiency over the course of the step test.

2.6 LONG TERM PUMPING TEST

The long-term focused pumping rate for the remainder of the additional pilot test will be determined via the step test results, with a maximum production rate of 300 gpm. The groundwater extraction rate will remain constant throughout the test, although deviations may occur as hydraulic conditions change and adjustments to the pumping rate may be necessary. Groundwater and LNAPL recovery rates will be tracked on a daily basis using in-line flow meters. LNAPL recovery rates determined via the flow meter will be compared to measurements recorded within the LNAPL storage tanks each day.

Fluid levels in the production well, LNAPL recovery well, and the monitoring network identified in Table 1 will be manually gauged using an interface probe, at least three times each week, but no more than daily. In addition, the piezometric surface in the groundwater recovery well and a subset of the observation wells listed in Table 1 will be measured on 8-hour intervals using pressure transducers over the course of the additional pilot test. It should be noted that fluid levels within two background wells (MP-035D and MP-085D) located beyond the influence of the groundwater production well will also be monitored during the additional pilot test. These wells will serve as "background" locations for which corrections to water levels within Area A will be applied, if appropriate. These data, combined with the average flow rate for the groundwater production well, will allow for estimates of aquifer parameters, including hydraulic conductivity, transmissivity, and potentially storativity. These data will also allow for an estimate of the radius of influence for groundwater extraction and LNAPL recovery during focused pumping.

2.6.1 ANTICIPATED RADIUS OF INFLUENCES

Focused pumping performed in Area A will create a cone of depression within the Main Sand Unit centered on production well HPW-01. This area of water table depression will likely intersect the drawdown induced by hydraulic controls performed on the former Premcor facility using the former refinery production well RPW-01. Valero is required to maintain inward hydraulic gradients along the northwestern portion of the former Premcor facility adjacent to Area A. According to the memo entitled *Use of LNAPL Transmissivity Values as a Decision Making Tool for LNAPL Recovery in Hartford, Illinois* (AECOM 2010), an upper-end radius of capture of 300 feet was assumed for production well RPW-1 as part of an LNAPL Distribution and Recovery Model (LDRM). The pumping rate at

recovery well RPW-01, located on the former Premcor facility, is reportedly maintained around 200 gpm. A similar radius of capture/influence is anticipated for the proposed Area A production well HPW-01 at rates between 200 and 300 gpm.

As shown on Figure 9, there is the potential for redistribution of dissolved phase petroleum hydrocarbons during the additional pilot test. Hydraulic gradients along North Olive Street may temporarily be redirected towards the groundwater production well HPW-01 within the "buffer zone" shown on Figure 9. Within this buffer zone, the radii of influence of RPW-01 and HPW-01 may overlap. In this case, hydraulic gradients may not be locally directed towards the former Premcor facility pumping well RPW-01 along the western facility boundary, but instead might be directed toward HPW-01. However, the localized redirection of flow while Area A production well HPW-01 is operating should not result in any potential migration of dissolved phase constituents outside of the overall distribution of the smear zone. Groundwater that might normally be captured by pump well RPW-1 would instead be recovered during focused pumping from production well HPW-01 in Area A.

Additionally, it is expected that LNAPL recovery and enhanced oxygen transport to the smear zone via operation of the Hartford SVE system will result in enhanced smear zone depletion within the vapor phase within this portion of Area A. Enhanced vapor losses from the smear zone will be tracked by monitoring the influent concentrations of volatile hydrocarbons captured by the SVE system (Section 2.6.3). The focused pumping may also result in some enhanced depletion within the saturated zone due to increased flow through the smear zone toward the new production well. The amount of enhanced hydrocarbon removal in the dissolved-phase would likely be relatively small, since LNAPL tends to contain a much higher mass of hydrocarbons. Still, dissolved-phase hydrocarbon flux is worth quantifying, especially since it also provides some information on the potential effects of temporary, localized redirection of contaminants in the area along the former Premcor facility boundary (Figure 9) while production well HPW-01 is operating. Therefore, groundwater samples will be collected monthly from the monitoring wells identified in Table 1. Samples will be collected prior to the start of focused pumping, during the pilot test, and for a six-month period following termination of focused pumping. Groundwater samples will be analyzed for select petroleum-related constituents including: benzene, toluene, ethylbenzene, total xylenes, and methyl tert butyl ether via USEPA Method 8260B. The analytical results will be used to estimate enhanced hydrocarbon fluxes in groundwater. The results will also be reviewed to determine if there is any redistribution of dissolved phase hydrocarbons associated with the additional pilot test performed in Area A. Dissolved phase concentrations following completion of the additional pilot test should decrease over time to pre-test concentrations, unless redistribution of the LNAPL source occurs.

Apex has discussed conceptually with Valero the plans described in this Work Plan Addendum, and Valero has requested that the plans be reviewed with the personnel at the Illinois EPA who oversee the hydraulic control program

at the former Premcor refinery. In addition, some data collected during the pilot testing, such as groundwater elevations and dissolved phase concentrations, may be useful to Valero for demonstrating compliance with the hydraulic control requirements. A meeting between Valero, Apex, and USEPA and Illinois EPA personnel will be scheduled following submittal of this Work Plan Addendum to discuss the additional LNAPL recovery pilot test.

2.6.2 LNAPL TRANSMISSIVITY

Estimates of LNAPL transmissivity will be performed within selected wells in and around Area A, as described in Section 2.1.2, to evaluate increasing LNAPL recoverability as additional portions of the smear zone are exposed. At a minimum, baildown or skimming tests will be conducted once the effects of pumping have reached approximate steady state conditions. In this case, steady state will be considered to have been achieved when LNAPL thicknesses in observation wells are no longer showing increasing or decreasing trends (i.e., continuous increase or decrease of 25% of the measured LNAPL thickness over seven days). If appropriate, additional LNAPL transmissivity estimates may be made prior to reaching steady state conditions.

2.6.3 SVE RECOVERY RATES

During the additional pilot test, soil vapor extraction will continue in the SVE and MPE wells located in and surrounding Area A including those wells shown on Figure 7. Field screening of total organic vapor and fixed gases will be performed three times each week within the SVE and MPE wells listed on Table 1. Field screening from the SVE and MPE wells will be performed in accordance with the procedures presented in Appendix D of the *Work Plan* (WSP 2011).

3.0 DATA EVALUATION

Data from the additional pilot test will be used to evaluate the effect of focused pumping on the potentiometric surface within the Main Sand Unit under unconfined conditions, as well as the resulting LNAPL recoverability within those portions of the smear zone that have been submerged since early 2008. The data evaluation will consider multiple lines of evidence upon collection and reduction of the additional pilot test results. There are several parameters that will factor into whether LNAPL recovery is viable using a focused pumping approach, including well performance, aquifer response, LNAPL transmissivity, and vapor recovery rates.

3.1 PRODUCTION WELL PERFORMANCE

The step test will provide drawdown data from the production well over various groundwater extraction rates, which will allow for an estimate of the head loss coefficients (which is a graphical analysis relating extraction rate to drawdown). In addition, drawdown data collected from the monitoring network will allow for evaluation of drawdown versus distance from the production well to estimate the well efficiency. These two parameters will be useful in assessing overall well performance, including consideration of the drilling method, diameter of the boring, diameter of the screen, screen length, depth of screen interval, length of the sump, screen slot size, and filter pack size.

3.2 HYDRAULIC CONDUCTIVITY AND TRANSMISSIVITY

The drawdown data collected from the monitoring network combined with the groundwater extraction rate will be used to estimate the hydraulic conductivity and transmissivity of the Main Sand Unit beneath Area A. In addition, early time pumping data may be used to estimate the storativity of the aquifer. These parameters will be useful for estimating drawdown that can be achieved under generalized aquifer piezometric surface elevations and the effectiveness of focused pumping to expose additional portions of the smear zone beneath Area A.

3.3 RADIUS OF INFLUENCE

The fluid level measurements collected in the monitoring network around the production well, when adjusted for ambient changes in fluid levels determined via the background wells, will allow for an estimate of the radius of influence of focused pumping beneath Area A. This data will also be useful in assessing the performance of the pumping well.

3.4 LNAPL RECOVERY RATE

The LNAPL recovery rates over time will be evaluated to determine if a sustained increase in recovery was attained as additional portions of the smear zone are exposed. The rate of LNAPL recovery over the course of the test will be evaluated as groundwater is drained from the exposed portions of the smear zone until steady state conditions are achieved. In addition, the ratio of LNAPL recovered to groundwater produced will be evaluated. Decreases in either LNAPL recovery rates or the ratio of the LNAPL to groundwater recovery rates over time may be an indication that, even with significant modification of the aquifer dynamics, long-term LNAPL recovery is not viable using a focused pumping approach.

3.5 LNAPL RECOVERY RADIUS OF INFLUENCE

Manual fluid level measurements in the monitoring network will be examined to determine if measurable LNAPL thickness increases as the water table is depressed. Increasing LNAPL thicknesses will provide one line of evidence that focused pumping has the potential to increase the vertical interval from which LNAPL can be recovered. Thus, the distance from the pumping well to the observation well at which LNAPL thicknesses are observed to increase will be evaluated as an indication of the LNAPL recovery radius of influence. The occurrence of LNAPL in the monitoring network will also be evaluated to consider the radius of influence of the LNAPL recovery well and whether skimming in wells near the LNAPL recovery well increases LNAPL recovery during focused pumping.

3.6 LNAPL TRANSMISSIVITY

Groundwater pumping during the additional pilot test may not appreciably change the LNAPL thicknesses measured across the monitoring network, but may instead result in an increase in the LNAPL transmissivity within the Main Sand Unit. Such a phenomenon would be observed as an increase in the LNAPL transmissivity versus the baseline transmissivity measurements. Therefore, both LNAPL thicknesses and LNAPL transmissivities in observation wells will be compared to baseline monitoring to assess the LNAPL radius of recovery.

LNAPL transmissivities obtained during the additional pilot test will also provide an indication of the degree to which focused pumping influences LNAPL recoverability. The LNAPL transmissivities measured during the additional pilot test will be compared to the agreed upon Area A pilot test LNAPL recovery endpoint range of 0.3 and 0.8 ft^2/day. This comparison to the LNAPL transmissivity endpoints will be considered one of the primary lines of evidence in measuring the effectiveness of the focused pumping approach.

The LNAPL transmissivity values obtained during focused pumping will be compared as ratios to baseline measurements, and these ratios will be mapped to show the distribution and degree of LNAPL recoverability as

increased portions of the smear zone are exposed. In addition, the transmissivities for observation wells will be combined with assumptions regarding induced drawdown to estimate potential recovery rates for skimming.

3.7 SVE RECOVERY RATE

The total organic vapor and fixed gas field screening results collected from the SVE and MPE wells will be plotted over the course of the additional pilot test, with a comparison to baseline measurements to assess the response of petroleum hydrocarbon recovery in the vapor phase. The vapor recovery rates will be evaluated in the context of the water table elevation and additional smear zone exposed near the extraction wells. The change in the rate of vapor recovery will also be considered as one of the primary lines of evidence in evaluating the effectiveness of focused pumping in achieving smear zone mass reduction. The results of the additional pilot test will be used to evaluate triggers for performing vapor recovery in the MPE and SVE wells, optimizing screen intervals, and evaluating potential limitations in the thermal treatment infrastructure.

3.8 ENHANCED BIODEGRADATION NEAR THE RE-INJECTION WELL

As discussed in Section 2.3.4, re-injection of groundwater into the smear zone, if implemented during this additional pilot test, may result in a change in biodegradation processes and natural smear zone depletion rates near RW-002. This could occur as treated water increases partitioning of hydrocarbons from the smear zone to the dissolved phase. It could also occur as the re-injected water will likely contain elevated concentrations of electron receptors (such as oxygen) relative to ambient groundwater as a result of passing through the treatment train. Thus, re-injecting this treated groundwater will likely alter the geochemistry at and around the injection well in a manner that will stimulate microbial activity within the saturated zone. To evaluate any change in the biodegradation processes and rate associated with re-injection, geochemical and chemical data from the transect of wells near RW-002 (Table 3) along with the pre- and post-treated groundwater will be analyzed. The dissolved phase results will be used to characterize biodegradation processes (e.g., predominantly methanogenic at baseline, transitioning to aerobic during re-injection). Consideration of the re-injection flow rate will allow for some quantification of the change in biodegradation rates during and following conclusion of the pilot test.

4.0 DELIVERABLES

This section describes anticipated project deliverables including pre-notifications, intermediate status reports, and final pilot test results that will be submitted to the USEPA and the Illinois EPA during the additional pilot test.

4.1 PRE-NOTIFICATION

Apex will provide notification to the USEPA, the Illinois EPA, and the Village prior to implementation of the following field activities: (1) start of baseline monitoring (2) groundwater production and LNAPL recovery well installation, (3) mobilization of treatment equipment and initial startup for assessing treatment effectiveness, (4) commencement of focused pumping and LNAPL recovery, and (5) termination of focused pumping. If re-injection is necessary to manage treated water during the pilot test then additional notifications will be made prior to rehabilitating the production well RW-002 as well as prior to installing the transmission line from Area A to the production well. An anticipated schedule for each of these field activities will be provided with the respective pre-notification.

4.2 STATUS REPORTS

Apex will provide weekly status reports regarding the progress of the additional pilot test. Status reports will include a summary of activities performed, field and analytical results (as available), a preliminary evaluation of the project status, and a summary of anticipated activities to be conducted the following week.

4.3 REPORTING

A final report documenting the additional pilot test will be provided within 90 days following completion of focused pumping. The final report will provide documentation of field and analytical data in tabular form along with the data evaluation activities discussed in Section 3.0 in order to assess the overall effectiveness of focused pumping on liquid and vapor-phase LNAPL recovery within Area A.

5.0 REFERENCES

AECOM, et al. 2010. *Hartford Working Group LNAPL Transmissivity Calculation Standard Methods*. October 2010.

ASTM International. 2011. *Standard Guide for Estimation of LNAPL Transmissivity*. E2856 – 11. Updated January 2012.

WSP Environmental & Energy. 2012. *Light Non-Aqueous Phase Liquid Recovery Pilot Test Interim Report, Apex Oil Company, LLC, Hartford, Illinois*. July 2012.

WSP Environmental & Energy. 2011. *Light Non-Aqueous Phase Liquid Recovery Pilot Test Work Plan, Apex Oil Company, LLC, Hartford, Illinois*. Final. September 2011.

TABLES

TABLE 1. PILOT TEST MONITORING NETWORK
LIGHT NON-AQUEOUS PHASE LIQUID RECOVERY PILOT TEST WORK PLAN ADDENDUM
HARTFORD PETROLEUM RELEASE SITE, HARTFORD, ILLINOIS

Location	Distance from Production Well (ft)	Stratum	Screen Length (ft)	Screened Interval (ft-amsl)	Baseline Gauging	Pressure Transducer	LNAPL Transmissivity Testing	Fluid Level Gauging	Soil Vapor Sampling	Dissolved Phase Groundwater Monitoring
Groundwater Extraction Well:										
HPW-01	0	Main	20	380.9 - 360.9	X	X	--	X	--	--
LNAPL Extraction Well:										
HLRW-01	10	Main	20	405.9 - 385.9	X	X	X	X	--	--
Monitoring Wells:										
MPE-A003	29	Main Sand	19.5	402.1 - 382.6	X	X	X	X	X	--
ASW-3	39	Multiple Strata	20.0	410.9 - 390.9	X	X	X	X	--	--
MP-137	45	Main Sand	14.7	401.9 - 387.2	X	X	X	X	--	X
MPE-A002	58	Main Sand	19.3	401.0 - 381.7	X	--	X	X	X	--
MP-133	60	Main Sand	9.6	401.9 - 392.3	X	--	X	X	--	X
HSVE-28S	61	North Olive	4.5	421.1 - 416.6	X	--	--	--	X	--
HSVE-28D	64	Rand	6.5	410.1 - 403.6	X	--	--	--	X	--
HMW-44A	69	North Olive	9.7	422.8 - 413.1	X	--	X	X	--	--
MPE-A001	71	Main Sand	19.5	401.4 - 381.9	X	--	X	X	X	--
ASW-1	72	Multiple Strata	25.0	415.8 - 390.8	X	X	X	X	--	--
HMW-044B	74	Rand	4.7	410.8 - 406.1	X	--	--	X	--	--
MPE-A004	75	Main Sand	19.4	400.5 - 381.1	X	--	X	X	X	--
HMW-044C	77	Main Sand	14.9	402.6 - 387.7	X	X	X	X	--	X
HMW-044D	77	Main Sand	4.4	384.8 - 380.4	X	--	X	X	--	X
MP-134	80	Main Sand	14.7	402.4 - 387.7	X	X	X	X	--	X
ASW-2	88	Multiple Strata	25.0	415.7 - 390.7	X	--	X	X	--	--
MP-135	91	Main Sand	14.6	401.5 - 386.9	X	X	X	X	--	X
HSVE-084	94	Main Sand	3.5	410.0 - 406.5	X	--	--	--	X	--
MP-136	99	Main Sand	14.7	401.9 - 387.2	X	X	X	X	--	X
MPE-A005	111	Main Sand	19.5	401.0 - 381.5	X	--	X	X	X	--
HMW-020	117	Multiple Strata	15.3	403.9 - 388.6	X	--	X	X	--	--
MP-055C	151	Main Sand	14.7	401.5 - 386.8	X	X	X	X	--	--
MP-097D	189	Main Sand	9.4	398.8 - 389.4	X	--	X	X	--	X
MP-054C	243	Main Sand	14.7	398.9 - 384.2	X	X	X	X	--	--
MP-035D	1,024	Main Sand	14.7	402.4 - 387.7	X	X	--	X	--	--
MP-085D	1,099	Main Sand	9.5	388.4 - 378.9	X	X	--	X	--	--

Notes:

All distances and depths are approximate

"X" indicates monitoring to be performed, "--" indicates no monitoring to be performed

ft - feet

ft-amsl - feet above mean sea level

LNAPL - light non-aqueous phase liquid

TABLE 2. TREATED WATER DISCHARGE LIMITS
LIGHT NON-AQUEOUS PHASE LIQUID RECOVERY PILOT TEST WORK PLAN ADDENDUM
HARTFORD PETROLEUM RELEASE SITE, HARTFORD, ILLINOIS

Constituent of Concern	Method	Frequency	Limit for Discharge to Village of Hartford Combined Sewer[1] (mg/L)	Limit for Discharge to Separate Stormwater Conveyance System[2] (mg/L)	Limit for Reinjection into Well RW-002[3] (mg/L)
Volatile Organic Constituents					
Benzene	SW-846 8260	Weekly	TBD	4.2 (AS), 0.86 (CS)	0.005
Toluene	SW-846 8260	Weekly	TBD	2.0 (AS), 0.60 (CS)	1
Ethylbenzene	SW-846 8260	Weekly	TBD	0.15 (AS), 0.014 (CS)	0.7
Xylenes (total)	SW-846 8260	Weekly	TBD	0.92 (AS), 0.36 (CS)	10
Methyl tertiary-butyl ether (MTBE)	SW-846 8260	Weekly	TBD	--	0.07
Polyaromatic Hydrocarbons					
Acenaphthene	SW-846 8270	Weekly	TBD	--	0.42
Acenaphthylene	SW-846 8270	Weekly	TBD	--	--
Anthracene	SW-846 8270	Weekly	TBD	--	2.1
Benzo(a)anthracene	SW-846 8270	Weekly	TBD	--	0.00013
Benzo(a)pyrene	SW-846 8270	Weekly	TBD	--	0.0002
3,4-Benzofluoranthene	SW-846 8270	Weekly	TBD	--	--
Benzo(ghi)perylene	SW-846 8270	Weekly	TBD	--	--
Benzo(k)fluoranthene	SW-846 8270	Weekly	TBD	--	0.00017
Chrysene	SW-846 8270	Weekly	TBD	--	0.012
Dibenzo(a,h)anthracene	SW-846 8270	Weekly	TBD	--	0.0003
Fluoranthene	SW-846 8270	Weekly	TBD	--	0.28
Fluorene	SW-846 8270	Weekly	TBD	--	0.28
Indeno(1,2,3-cd)pyrene	SW-846 8270	Weekly	TBD	--	0.00043
Naphthalene	SW-846 8270	Weekly	TBD	--	0.14
Phenanthrene	SW-846 8270	Weekly	TBD	--	--
Pyrene	SW-846 8270	Weekly	TBD	--	0.21
Metals					
Arsenic (total)	SW-846 6010	Weekly	TBD	--	0.01
Lead (total)	SW-846 6010	Weekly	TBD	--	0.0075
Other					
Biological Oxygen Demand	EPA 410.4	TBD	TBD	--	--
Chemical Oxygen Demand	EPA 405.1	TBD	TBD	--	--

Notes:

[1] - Discharge to the Village of Hartford Sanitary Sewer System and treatment at the Wood River Wastewater Treatment Plant, sampling frequency and discharge limits to be established in coordination with the Village of Hartford and the Wood River Wastewater Treatment Plant .

[2] - Discharge to the Village of Hartford StormwaterConveyance System, the values presented reflect the acute standard (AS) and the chronic standard (CS) as defined by Title 35 of the Illinois Administrative Code, Subtitle C, Chapter I, Part 302.

[3] - Reinjection of the treated groundwater into recovery well RW-002 located 650 feet north of Area A, the values presented reflect Groundwater Quality Standards for Class I: Potable Resource Groundwater as defined by Title 35 of the Illinios Administrative Code, Subtitle F, Chapter I, Part 620.

TBD - To be defined with the Village of Hartford and Wood River Watewater Treatment Plant if the water management option described under No. 1 is utilized.

-- Constituent not identified in applicable Administrative Code

TABLE 3. PILOT TEST MONITORING NETWORK FOR CONTINGENCY RE-INJECTION AT RW-002
LIGHT NON-AQUEOUS PHASE LIQUID RECOVERY PILOT TEST WORK PLAN ADDENDUM
HARTFORD PETROLEUM RELEASE SITE, HARTFORD, ILLINOIS

Location	Distance from Re-Injection Well (ft)	Stratum	Screen Length (ft)	Screened Interval (ft-amsl)	Baseline & Steady State Fluid Level Gauging	Pressure Transducer	Baseline & Steady State Geochemical Monitoring	Pressure, TOV & Fixed Gases
Re-Injection Well:								
RW-002	0	Main Sand	NA	NA	X	X	X	--
Northwest Transect Wells:								
IEPA-004	110	Main Sand	20	404.9 - 384.9	X	--	X	--
MP-042C	64	Main Sand	9.7	401.0 - 391.3	X	X	X	--
MP-037D	196	Main Sand	9.7	399.4 - 389.7	X	--	X	--
MP-125D	225	Rand	0.91	410.2 - 409.3	X	--	X	--
Northeast Transect Wells								
RW-005	11	Multiple Strata	24.4	411.2 - 386.8	X	X	X	--
HMW-034	23	Multiple Strata	24.7	411.2 - 386.5	X	X	X	--
HMW-035	32	Multiple Strata	24.7	411.6 - 386.9	X	X	X	--
HMW-036	46	Multiple Strata	24.7	411.1 - 386.4	X	--	X	--
HMW-037	65	Multiple Strata	24.7	411.1 - 386.4	X	--	X	--
MP-105D	76	North Olive	NA	NA	X	--	--	--
MP-105E	75	North Olive	NA	NA	X	--	--	--
Vapor Monitoring Points								
VP-001	41	A Clay	0.5	425.3 - 424.8	--	--	--	X
VP-002	42	A Clay	0.5	427.6 - 427.1	--	--	--	X
VP-003	46	N. Olive	0.5	419.5 - 419.0	--	--	--	X
VP-004S	32	N. Olive	0.5	418.6 - 418.1	--	--	--	X
VP-004M	32	Rand	0.5	409.6 - 409.1	--	--	--	X
VMP-090S	180	N. Olive	0.5	419.4 - 418.9	--	--	--	X

Notes:

All distances and depths are approximate

"X" indicates monitoring to be performed, "--" indicates no monitoring to be performed

ft - feet

ft-amsl - feet above mean sea level

LNAPL - light non-aqueous phase liquid

TOV - Total organic vapor

NA - Not Available

FIGURES

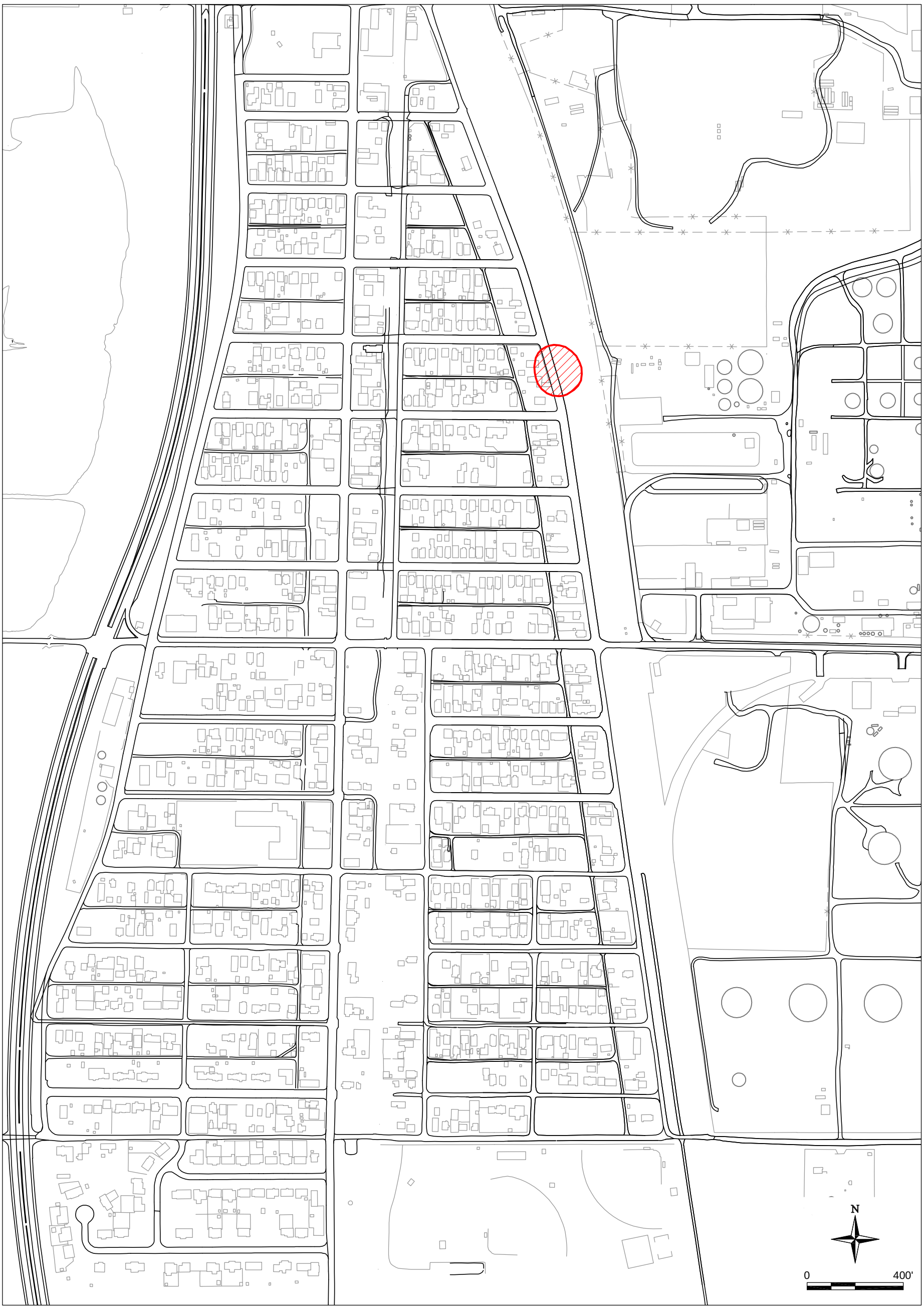

EXPLANATION

AREA A

FENCE

Trihydro CORPORATION
1252 Commerce Drive
Laramie, Wyoming 82070
www.trihydro.com
(P) 307/745.7474 (F) 307/745.7729

FIGURE 1

SITE LOCATION MAP

HARTFORD PETROLEUM RELEASE SITE
HARTFORD, ILLINOIS

Drawn By: KBW	Checked By: JGP	Scale: 1" = 400'	Date: 4/24/13	File: 24S_SITELOCMAP201304

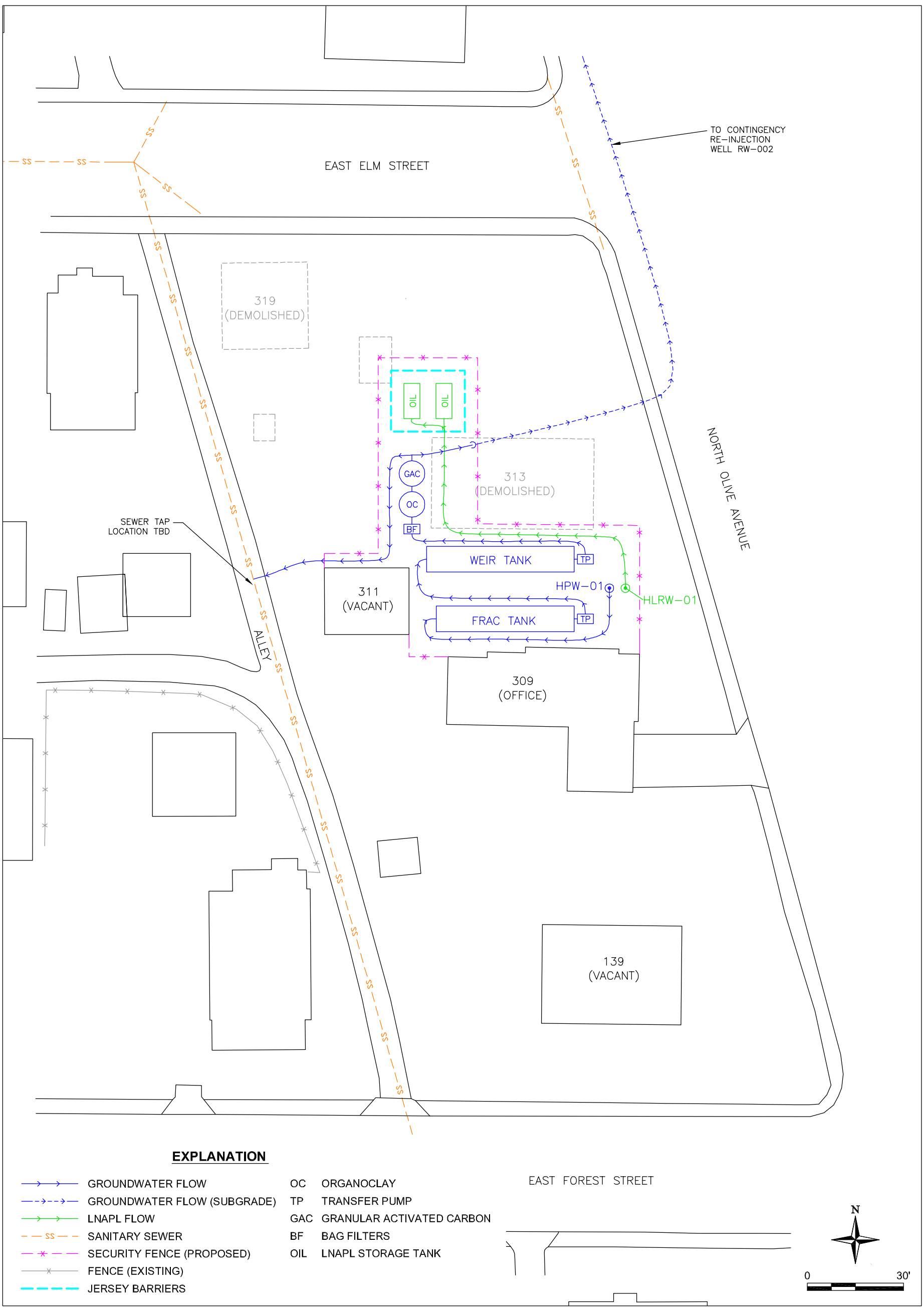

EXPLANATION

	GROUNDWATER FLOW	OC	ORGANOCLAY
	GROUNDWATER FLOW (SUBGRADE)	TP	TRANSFER PUMP
	LNAPL FLOW	GAC	GRANULAR ACTIVATED CARBON
	SANITARY SEWER	BF	BAG FILTERS
	SECURITY FENCE (PROPOSED)	OIL	LNAPL STORAGE TANK
	FENCE (EXISTING)		
	JERSEY BARRIERS		

Trihydro CORPORATION
1252 Commerce Drive
Laramie, Wyoming 82070
www.trihydro.com
(P) 307/745.7474 (F) 307/745.7729

FIGURE 2

PILOT TEST INFRASTRUCTURE LAYOUT

HARTFORD PETROLEUM RELEASE SITE
HARTFORD, ILLINOIS

Drawn By: KBW	Checked By: JGP	Scale: 1" = 30'	Date: 4/8/13	File: 24S_SITEMAPMULTI201302

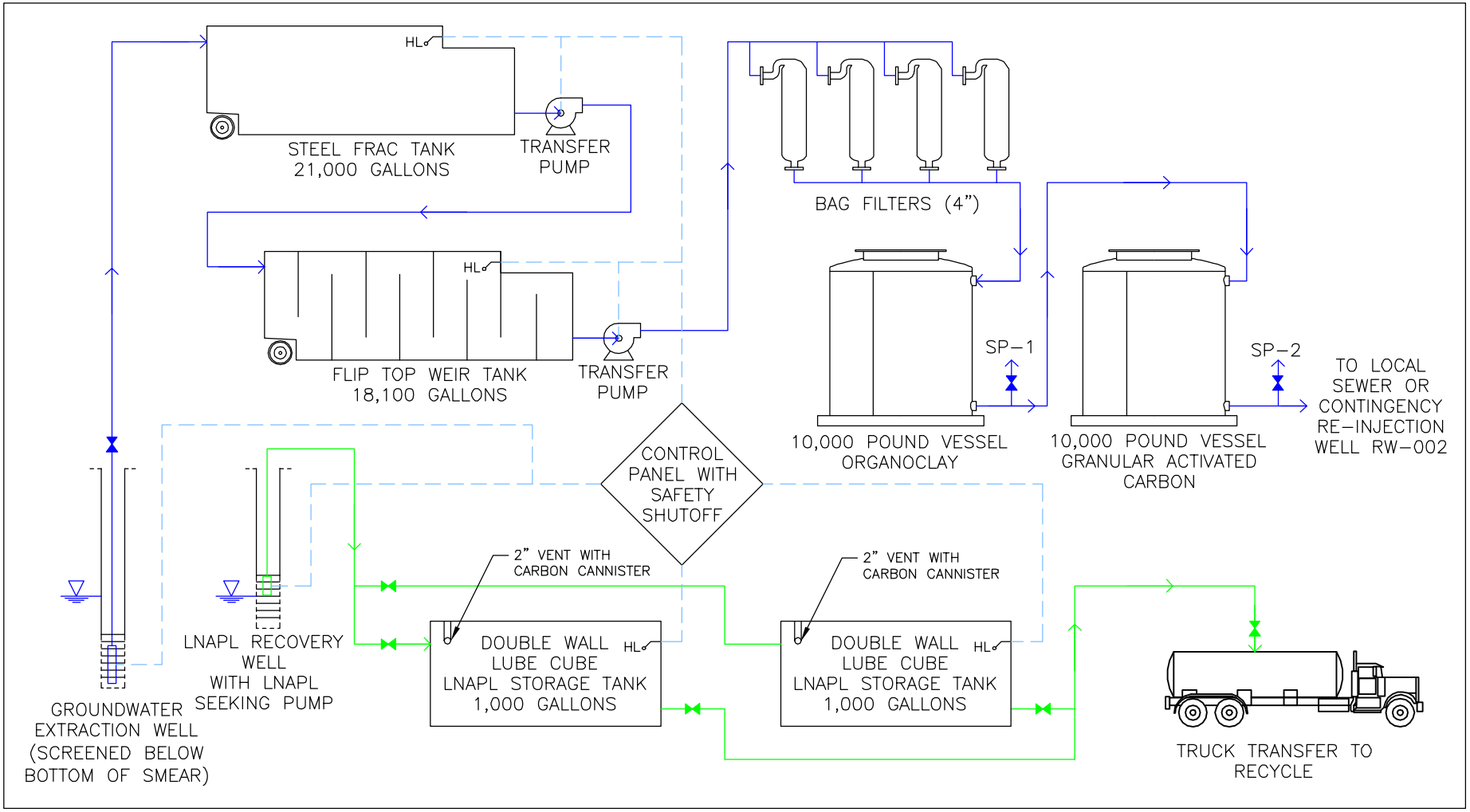

EXPLANATION

→	GROUNDWATER FLOW
→	LNAPL FLOW
- - -	CONTROL SYSTEM
HL	HIGH LEVEL SENSOR
SP	SAMPLE PORT AND DESIGNATION

Trihydro CORPORATION
1252 Commerce Drive
Laramie, Wyoming 82070
www.trihydro.com
(P) 307/745.7474 (F) 307/745.7729

FIGURE 3

CONCEPTUAL TREATMENT TRAINS

HARTFORD PETROLEUM RELEASE SITE
HARTFORD, ILLINOIS

Drawn By: KBW	Checked By: JP	Scale: NONE	Date: 4/25/13	File: 24S_PRCSSFLWDIA201302

FIGURE 4. WELL HMW-044C HYDROGRAPH
LIGHT NON-AQUEOUS PHASE LIQUID RECOVERY PILOT TEST WORK PLAN ADDENDUM
HARTFORD PETROLEUM RELEASE SITE, HARTFORD, ILLINOIS

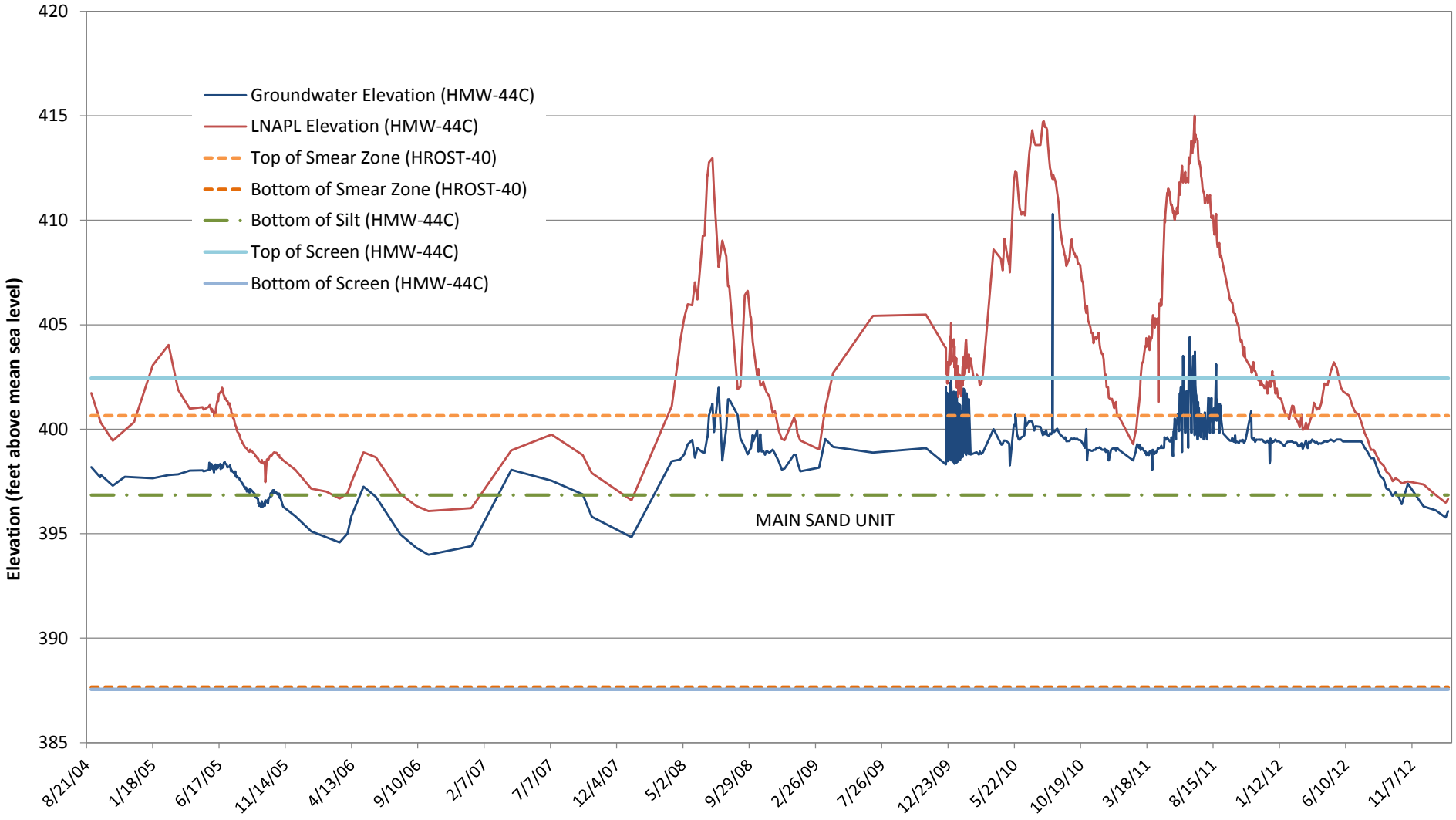

FIGURE 5. WELL ASW-3 HYDROGRAPH
LIGHT NON-AQUEOUS PHASE LIQUID RECOVERY PILOT TEST WORK PLAN ADDENDUM
HARTFORD PETROLEUM RELEASE SITE, HARTFORD, ILLINOIS

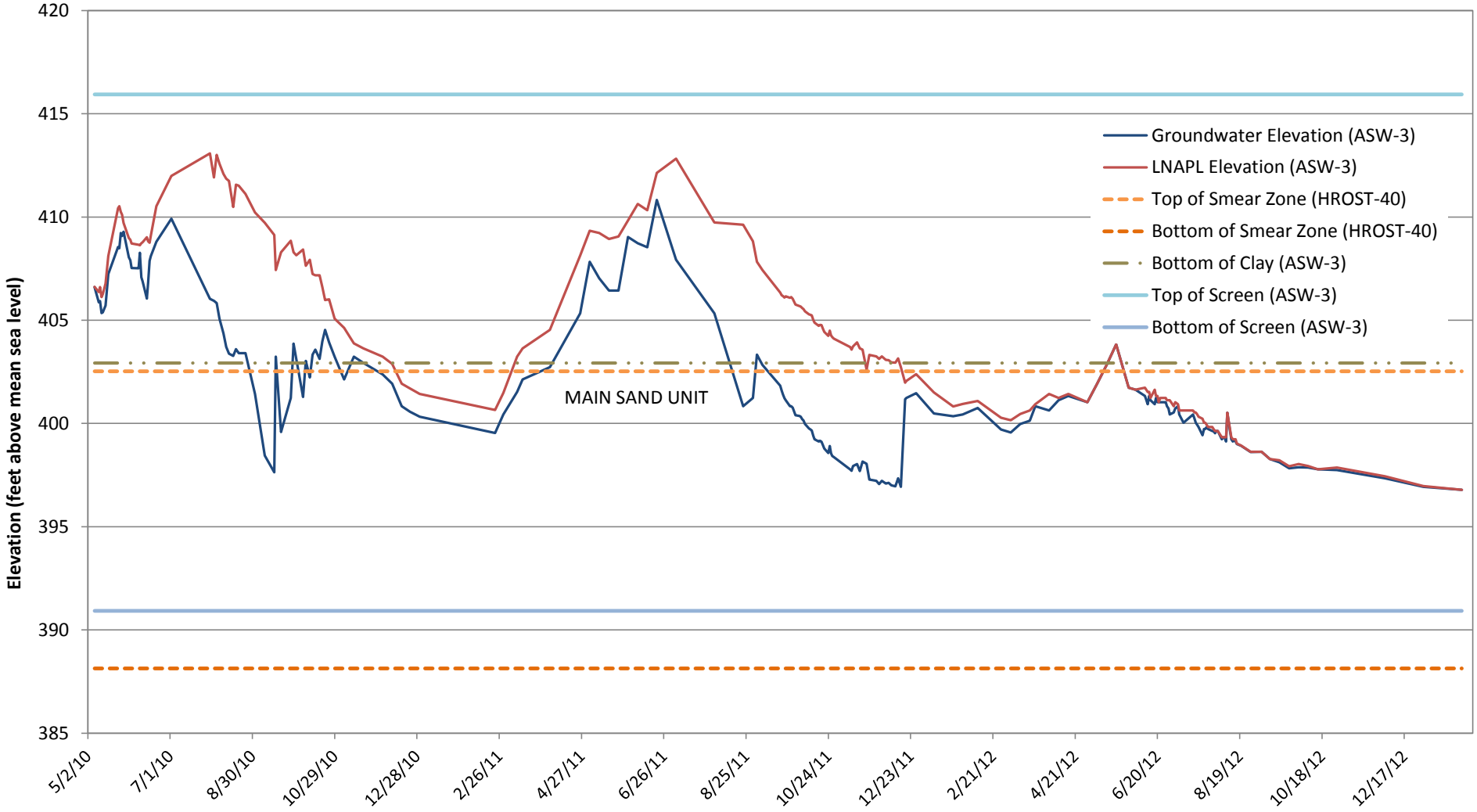

FIGURE 6. WELL MPE-A003 HYDROGRAPH
LIGHT NON-AQUEOUS PHASE LIQUID RECOVERY PILOT TEST WORK PLAN ADDENDUM
HARTFORD PETROLEUM RELEASE SITE, HARTFORD, ILLINOIS

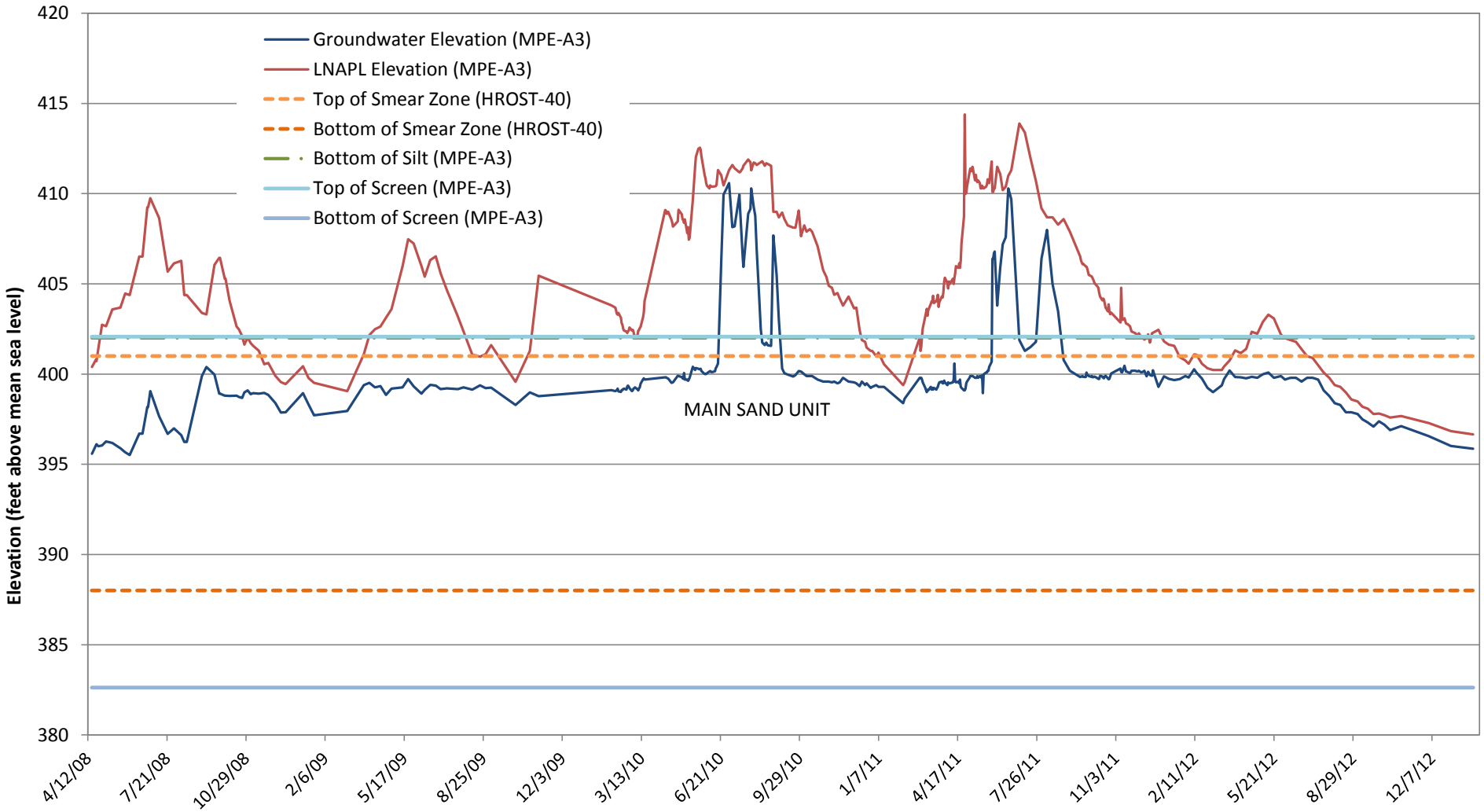

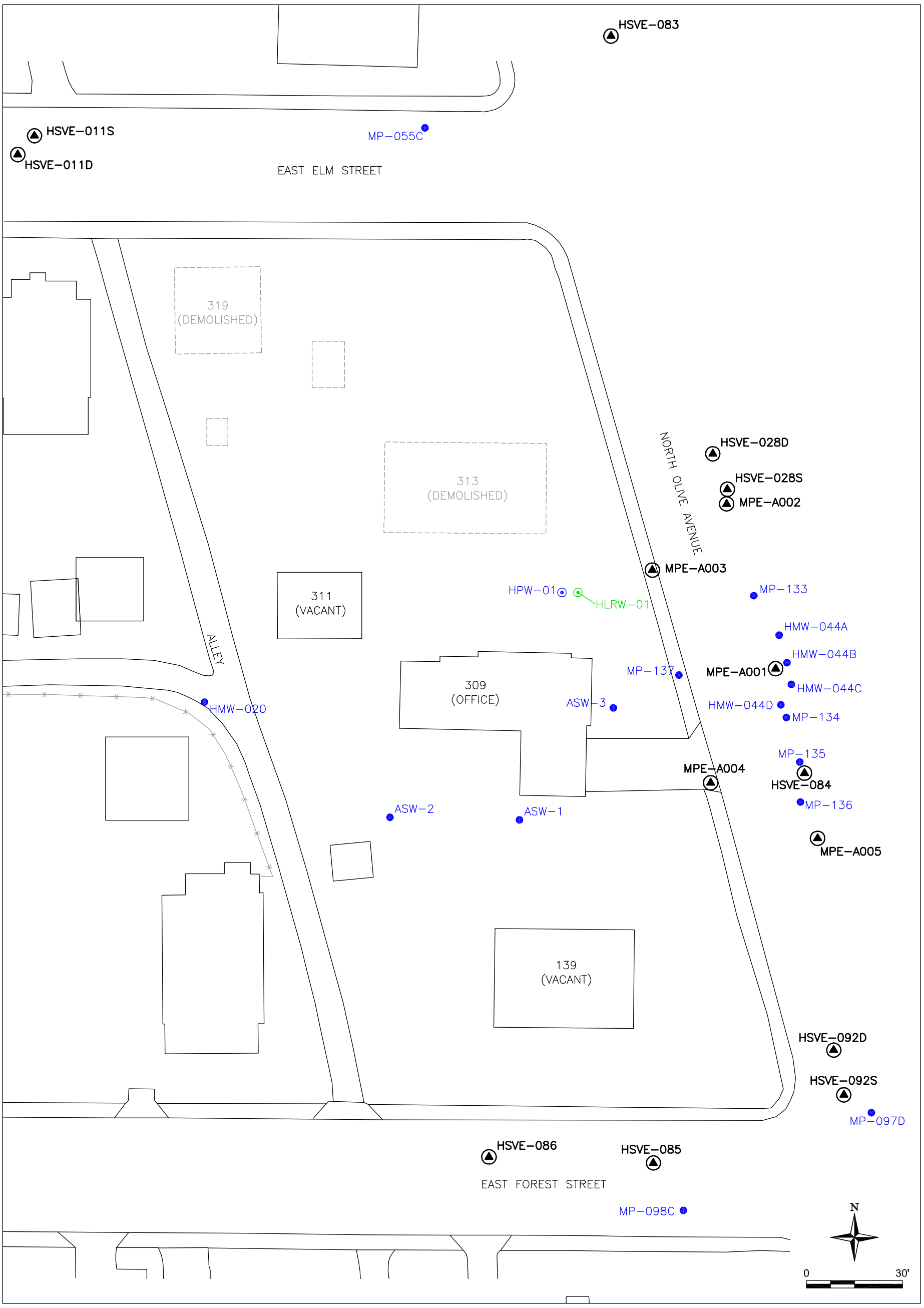

EXPLANATION

HSVE-086	SOIL VAPOR EXTRACTION WELL
MP-098C	GROUNDWATER MONITORING WELL
HPW-01	GROUNDWATER PUMPING WELL (PROPOSED)
HLRW-01	LNAPL RECOVERY WELL (PROPOSED)
	FENCE

Trihydro CORPORATION
1252 Commerce Drive
Laramie, Wyoming 82070
www.trihydro.com
(P) 307/745.7474 (F) 307/745.7729

FIGURE 7

MONITORING AND RECOVERY WELL NETWORK

HARTFORD PETROLEUM RELEASE SITE
HARTFORD, ILLINOIS

Drawn By: KBW	Checked By: JGP	Scale: 1" = 30'	Date: 4/8/13	File: 24S_SITEMAPMULTI201302

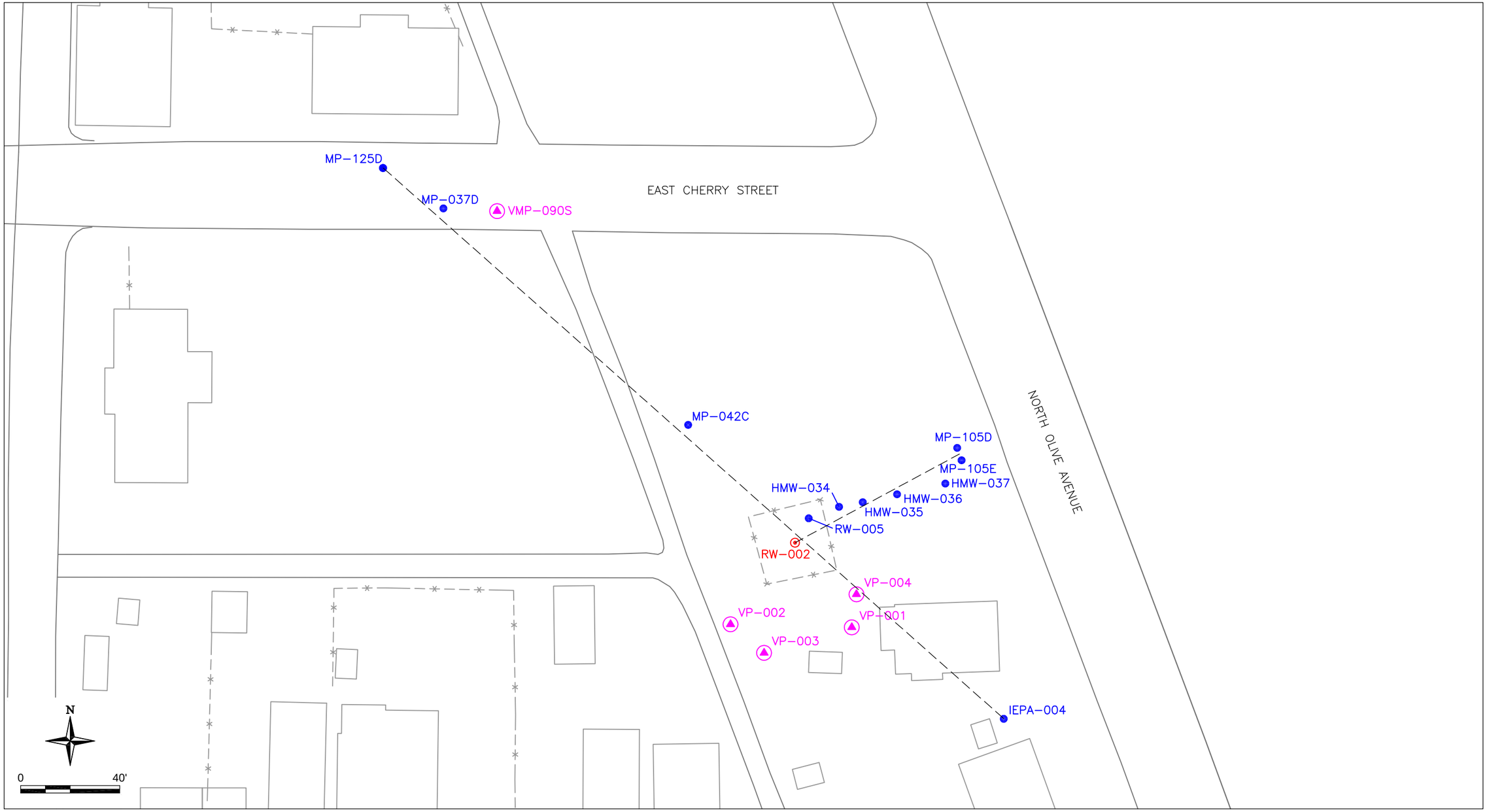

EXPLANATION

RW-002	PROPOSED RE-INJECTION WELL AND DESIGNATION	— — — —	POTENTIAL MONITORING TRANSECT
IEPA-004	GROUNDWATER MONITORING WELL AND DESIGNATION	— ✳ — —	FENCE
VP-003	VAPOR MONITORING POINT AND DESIGNATION	———	EDGE OF ROADWAY

NOTE:
ALL GROUNDWATER MONITORING WELLS SHOWN ARE SCREENED WITHIN THE MAIN SAND OR MULTIPLE STRATIGRAPHIC UNITS THAT INCLUDE THE MAIN SAND.
FOR CLARITY, ONLY THOSE MONITORING WELLS PROPOSED FOR EVALUATION OF RE-INJECTION SHOWN.

Trihydro CORPORATION
1252 Commerce Drive
Laramie, Wyoming 82070
www.trihydro.com
(P) 307/745.7474 (F) 307/745.7729

FIGURE 8

PROPOSED RE-INJECTION WELL RW-002 AND MONITORING NETWORK

HARTFORD PETROLEUM RELEASE SITE
HARTFORD, ILLINOIS

Drawn By: KGW	Checked By: JGP	Scale: 1" = 40'	Date: 4/24/13	File: 24S_REINJRW-002_201303

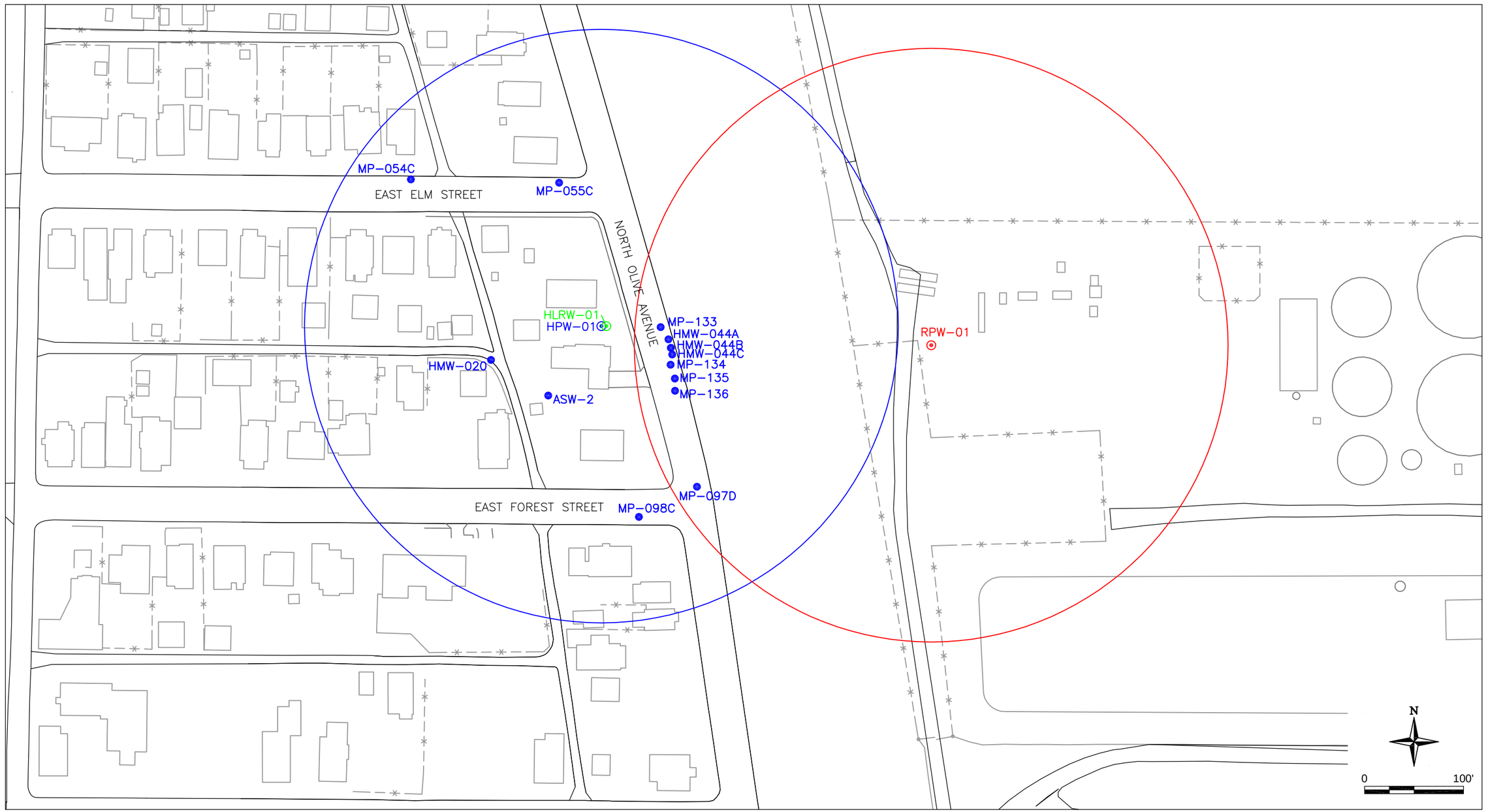

EXPLANATION

MP-098C	GROUNDWATER MONITORING WELL
HPW-01	GROUNDWATER PUMPING WELL WITH 300-FOOT RADIUS OF INFLUENCE
HLRW-01	LNAPL RECOVERY WELL (PROPOSED)
RPW-01	PREMCOR GROUNDWATER PUMPING WELL WITH 300-FOOT RADIUS OF INFLUENCE
— * — —	FENCE

Trihydro CORPORATION
1252 Commerce Drive
Laramie, Wyoming 82070
www.trihydro.com
(P) 307/745.7474 (F) 307/745.7729

FIGURE 9

ANTICIPATED RADIUS OF INFLUENCE FOR FOCUSED PUMPING

HARTFORD PETROLEUM RELEASE SITE
HARTFORD, ILLINOIS

Drawn By: KGW	Checked By: JGP	Scale: 1" = 100'	Date: 4/24/13	File: 24S_PREMCORROI_201302

APPENDIX A

SUB-SLAB VAPOR, INDOOR AIR, AND SOIL VAPOR FIELD SCREENING AND LABORATORY ANALYTICAL RESULTS FOR 507 NORTH OLIVE STREET

FIGURE A-1. MAXIMUM INDOOR AIR TOTAL ORGANIC VAPOR MEASUREMENTS COMPARED TO GROUNDWATER ELEVATIONS, 507 NORTH OLIVE STREET
HARTFORD PETROLEUM HYDROCARBON RELEASE SITE
HARTFORD, ILLINOIS

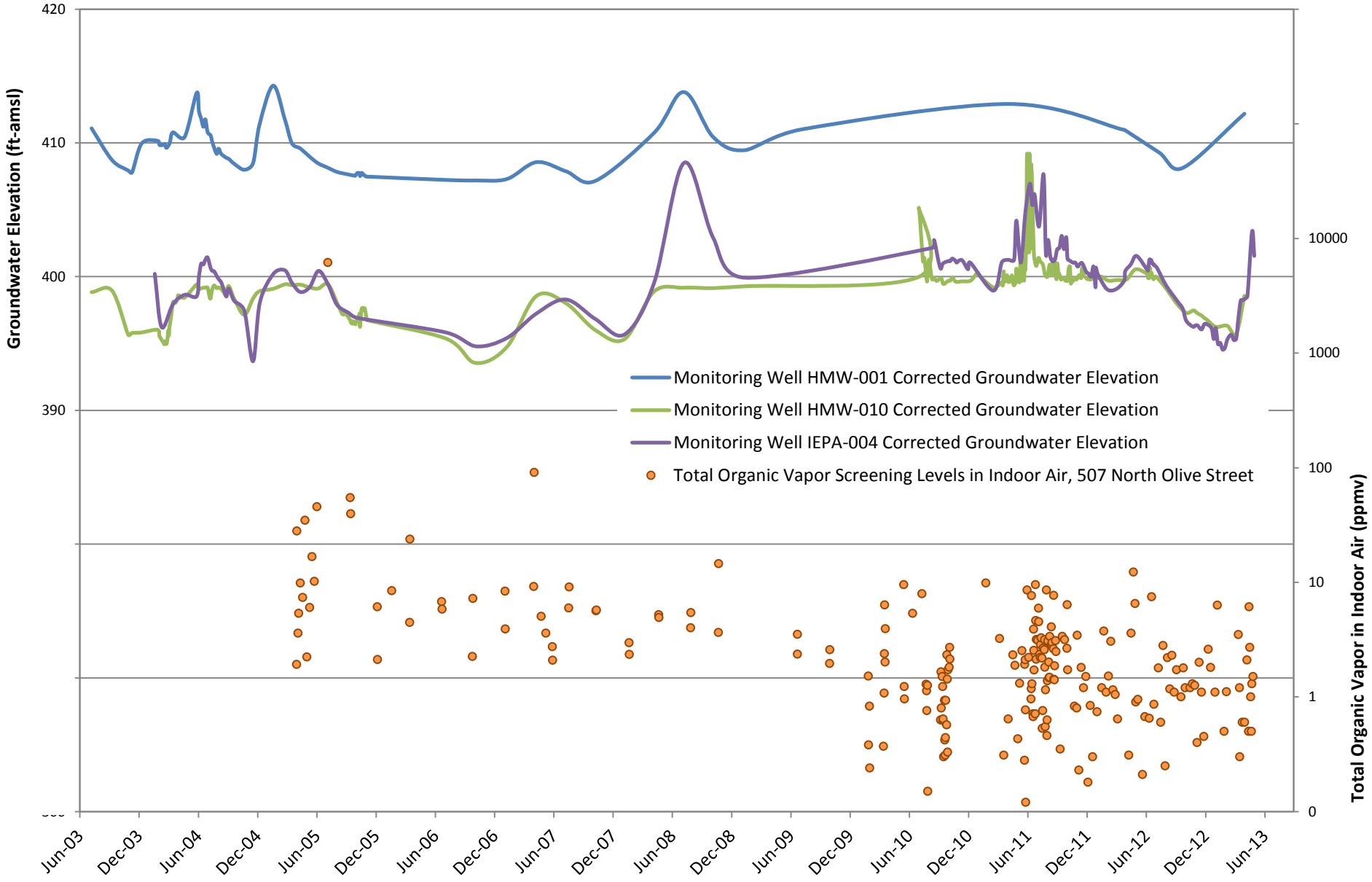

TABLE A-1. SUMMARY OF FIELD SCREENING MEASUREMENTS FROM NESTED SOIL VAPOR MONITORING WELLS AND MONITORING POINTS NEAR 507 NORTH OLIVE STREET
HARTORD PETROLEUM HYDROCARBON RELEAESE SITE
HARTFORD, ILLINOIS

Well location	Date	FID (ppmv)	Pressure/ Vacuum (in-H_2O)	Oxygen (%)	Carbon Dioxide (%)	Methane (%)
MP-037D	1/17/2006	1,000,000	-0.24	2.1	11.8	30.1
	1/31/2006	1,000,000	-0.25	0.4	12.4	27.6
	2/14/2006	1,000,000	-0.28	0.9	12.7	33.1
	2/28/2006	1,000,000	0.25	1.5	11.6	24.2
	3/14/2006	1,000,000	--	0.4	12.3	16.5
	3/28/2006	140,000	--	19.5	1.0	0.5
	4/11/2006	1,000,000	0.02	0.9	11.9	61.4
	5/16/2006	1,000,000	0.18	6.1	7.4	100.0
	6/20/2006	1,000,000	-0.46	1.4	9.9	47.6
	7/18/2006	1,000,000	0.01	1.3	10.5	36.3
	8/15/2006	1,000,000	-0.21	0.8	10.9	24.2
	9/19/2006	1,000,000	-0.01	2.1	10.7	21.4
	10/17/2006	215,000	-0.09	2.2	10.6	11.4
	11/20/2006	1,000,000	-0.18	0.5	11.6	15.3
	12/19/2006	1,000,000	0.11	1.5	11.4	22.2
	1/16/2007	1,000,000	-0.27	1.1	12.5	51.2
	2/21/2007	1,000,000	-0.38	1.9	13.6	100.0
	3/20/2007	1,000,000	0.05	2.5	11.2	100.0
	4/17/2007	1,000,000	--	1.1	8.5	100.0
	8/21/2007	1,000,000	-0.49	0.2	9.9	100.0
	9/18/2007	1,000,000	-0.93	4.1	7.3	68.4
	10/16/2007	1,000,000	0.09	3.5	9.7	50.5
	11/13/2007	1,000,000	-0.03	1.0	10.1	18.0
	1/16/2008	1,000,000	0.12 R	2.1	10.9	37.5
	2/19/2008	1,000,000	0.06	3.2	10.7	74.0
	3/18/2008	1,000,000	0.68 R	1.4	8.8	100.0

TABLE A-1. SUMMARY OF FIELD SCREENING MEASUREMENTS FROM NESTED SOIL VAPOR MONITORING WELLS AND MONITORING POINTS NEAR 507 NORTH OLIVE STREET
HARTORD PETROLEUM HYDROCARBON RELEAESE SITE
HARTFORD, ILLINOIS

Well location	Date	FID (ppmv)	Pressure/ Vacuum (in-H_2O)	Oxygen (%)	Carbon Dioxide (%)	Methane (%)
MP-037D	1/20/2009	6.02	0.66	20.9	0.0	0.0
	2/17/2009	1,000,000	1.28	2.9	9.7	100.0
MP-042C	1/27/2005	157,000	--	--	--	--
	5/18/2005	1,870	0.00	20.7	0.0	--
	5/24/2005	690,000	0.00	14.2	3.4	--
	6/1/2005	1,000,000	-0.24	8.5	6.0	--
	6/7/2005	100,250	-0.01	18.3	1.3	--
	6/21/2005	375	-0.01	20.9	0.0	--
	7/19/2005	15.0	-0.76	20.9	0.0	0.0
	8/2/2005	1,000,000	-0.06	4.6	7.9	18.8
	8/16/2005	1,000,000	-0.05	1.2	8.2	100.0
	8/30/2005	1,000,000	0.05	1.8	8.3	100.0
	9/15/2005	700,000	0.01	1.8	8.7	48.0
	9/27/2005	1,000,000	-0.06	0.5	8.8	22.8
	10/26/2005	655,000	0.01	12.2	3.9	20.7
	11/8/2005	1,000,000	0.01	0.0	9.0	20.1
	11/21/2005	1,000,000	-0.01	0.8	9.6	28.3
	12/6/2005	1,000,000	-0.35	1.9	10.4	100.0
	12/20/2005	127,000	--	14.2	3.7	2.8
	1/4/2006	1,000,000	-0.14	2.1	9.7	10.3
	1/17/2006	128,000	-0.15	1.2	10.3	8.4
	1/31/2006	786,000	-0.15	12.1	5.8	4.7
	2/14/2006	1,000,000	-0.11	0.8	9.8	12.2
	3/14/2006	1,000,000	-0.37	3.0	8.8	7.3
	4/11/2006	1,000,000	0.00	0.1	9.3	4.3
	5/16/2006	1,000,000	0.04	7.2	4.8	64.4

TABLE A-1. SUMMARY OF FIELD SCREENING MEASUREMENTS FROM NESTED SOIL VAPOR MONITORING WELLS AND MONITORING POINTS NEAR 507 NORTH OLIVE STREET
HARTORD PETROLEUM HYDROCARBON RELEAESE SITE
HARTFORD, ILLINOIS

Well location	Date	FID (ppmv)	Pressure/ Vacuum (in-H_2O)	Oxygen (%)	Carbon Dioxide (%)	Methane (%)
MP-042C	6/20/2006	1,000,000	-0.14	0.8	7.4	100.0
	7/18/2006	1,000,000	0.01	5.8	7.3	27.0
	8/15/2006	1,000,000	-0.05	0.5	9.7	15.8
	9/19/2006	1,000,000	0.00	7.4	7.6	9.6
	10/17/2006	1,000,000	-0.04	1.4	9.4	12.4
	11/20/2006	1,000,000	-0.24	1.2	10.4	7.0
	12/19/2006	1,000,000	-0.07	1.1	9.8	8.7
	1/16/2007	1,000,000	-0.30	0.7	10.0	20.1
	2/21/2007	1,000,000	-0.14	7.5	6.6	21.3
	3/20/2007	1,000,000	0.05	2.1	7.8	100.0
	4/17/2007	892,000	0.32	15.0	2.1	20.8
	8/21/2007	9.00	-0.02	20.9	0.0	0.0
	9/18/2007	1,000,000	-0.03	0.5	7.0	100.0
	10/16/2007	1,000,000	-0.02	1.9	9.0	22.2
	11/13/2007	1,000,000	0.00	0.4	9.8	32.8
	1/16/2008	1,000,000	0.01	2.8	11.3	8.6
	2/20/2008	1,000,000	-0.52 R	5.9	11.6	14.9
	3/19/2008	1,000,000	0.1 R	1.6	11.1	100.0
	1/20/2009	13,500	0.15	20.7	0.2	0.6
	2/17/2009	1,000,000	0.82	2.9	9.8	100.0
	3/17/2009	3.90	0.00	20.9	0.0	0.0
	1/18/2011	3.88	2.74	20.9	0.0	0.0
	2/15/2011	1,000,000	0.34	8.2	5.6	100.0
MP-125D	11/14/2007	17,510	0.00	11.1	4.1	0.6
	1/16/2008	21,200	0.06	16.7	2.5	0.8
	2/19/2008	4,011	0.00	20.6	0.1	0.0

TABLE A-1. SUMMARY OF FIELD SCREENING MEASUREMENTS FROM NESTED SOIL VAPOR MONITORING WELLS AND MONITORING POINTS NEAR 507 NORTH OLIVE STREET
HARTORD PETROLEUM HYDROCARBON RELEAESE SITE
HARTFORD, ILLINOIS

Well location	Date	FID (ppmv)	Pressure/ Vacuum (in-H_2O)	Oxygen (%)	Carbon Dioxide (%)	Methane (%)
MP-125D	4/15/2008	54.2	0.00	20.9	0.0	0.0
	8/19/2008	22.7	0.00	20.9	0.0	0.0
	10/21/2008	1,244	0.00	20.7	0.1	0.0
	11/19/2008	16,200	0.00	16.5	2.9	1.2
	1/20/2009	1,918	-0.01	20.8	0.4	0.1
	2/17/2009	645	-0.01	20.9	0.0	0.0
	3/18/2009	10.5	-0.01	20.8	0.1	0.0
	8/18/2009	791	0.00	20.9	0.0	0.0
	9/16/2009	610	0.00	20.9	0.0	0.0
VMP-090S	5/19/2005	340,000	0.00	1.5	8.3	--
	5/24/2005	430,000	-0.15	0.8	9.2	--
	6/1/2005	395,000	0.00	1.6	9.0	--
	6/7/2005	317,500	-0.01	1.3	10.2	--
	7/19/2005	294,000	0.00	1.1	15.8	16.3
	8/2/2005	317,142	-0.05	3.5	17.3	18.9
	8/16/2005	374,285	0.01	1.1	19.4	21.7
	9/1/2005	6.20	0.00	20.9	0.0	0.0
	9/15/2005	232,000	0.21	0.6	22.6	11.5
	9/27/2005	200,000	0.00	0.3	23.9	12.1
	10/11/2005	174,000	-0.53	0.6	24.1	10.8
	10/26/2005	230,000	0.00	114.0	23.6	13.0
	11/8/2005	199,000	0.00	0.8	24.5	12.5
	11/21/2005	235,000	--	2.1	22.5	13.2
	12/6/2005	485,000	0.01	0.4	22.7	32.6
	12/20/2005	197,000	0.01	4.8	19.8	13.1
	1/4/2006	148,000	-0.63	3.1	17.2	9.2

TABLE A-1. SUMMARY OF FIELD SCREENING MEASUREMENTS FROM NESTED SOIL VAPOR MONITORING WELLS AND MONITORING POINTS NEAR 507 NORTH OLIVE STREET
HARTORD PETROLEUM HYDROCARBON RELEAESE SITE
HARTFORD, ILLINOIS

Well location	Date	FID (ppmv)	Pressure/ Vacuum (in-H_2O)	Oxygen (%)	Carbon Dioxide (%)	Methane (%)
VMP-090S	1/17/2006	137,000	-0.57	0.2	18.6	0.8
	1/31/2006	108,000	-0.01	0.6	17.2	6.2
	2/14/2006	81,320	-1.00	0.8	17.3	5.1
	2/28/2006	76,360	-1.26	0.8	16.0	4.5
	3/14/2006	45,680	-0.68	0.5	15.9	2.9
	3/28/2006	31,100	-0.34	0.7	15.9	2.2
	4/11/2006	42,140	0.00	0.5	15.5	2.3
	5/16/2006	137,000	0.00	2.6	15.4	10.2
	6/20/2006	603,000	0.03	0.7	18.4	36.5
	7/18/2006	855,000	0.00	2.1	20.3	47.8
	8/15/2006	745,000	-0.19	3.3	19.8	38.2
	9/19/2006	497,000	-0.33	3.4	21.2	27.9
	10/17/2006	458,000	-0.06	2.6	21.8	25.5
	11/20/2006	295,000	-0.48	2.2	20.8	18.2
	12/19/2006	217,000	-0.22	1.5	18.7	12.6
	3/20/2007	74,840	-1.11	4.8	11.6	5.3
	4/17/2007	497,000	0.00	1.3	14.8	32.9
	5/15/2007	668,000	0.00	7.5	15.8	41.6
	6/19/2007	546,000	0.00	1.0	17.3	34.9
	7/17/2007	141,000	-0.10	1.2	14.8	9.2
	8/21/2007	49,670	--	0.0	10.0	3.0
	9/18/2007	23,330	-0.09	0.5	8.5	1.5
	10/16/2007	13,000	-0.07	2.9	9.3	0.7
	11/13/2007	4,280	-0.09	1.1	8.8	0.2
	1/16/2008	12.4	-0.04	1.8	6.2	0.0
	2/19/2008	36.0	0.00	1.8	5.6	0.0

TABLE A-1. SUMMARY OF FIELD SCREENING MEASUREMENTS FROM NESTED SOIL VAPOR MONITORING WELLS AND MONITORING POINTS NEAR 507 NORTH OLIVE STREET
HARTORD PETROLEUM HYDROCARBON RELEAESE SITE
HARTFORD, ILLINOIS

Well location	Date	FID (ppmv)	Pressure/ Vacuum (in-H_2O)	Oxygen (%)	Carbon Dioxide (%)	Methane (%)
VMP-090S	3/18/2008	17,240	-0.22 R	2.2	4.8	0.6
	5/20/2008	9,050	-0.06	0.6	6.0	0.8
	6/17/2008	485 R	0.00	0.0 R	5.8 R	0.0 R
	6/18/2008	52.6	-0.02 R	0.2	6.1	0.0
	7/16/2008	636 R	-0.02	0 R	6.7 R	0.0 R
	8/18/2008	167	-0.02	2.4	8.9	0.0
	9/16/2008	19.7	-0.26	0.6	11.0	0.0
	10/21/2008	3.10	-0.02	1.7	10.3	0.0
	11/18/2008	3.30	-0.18	3.0	7.8	0.0
	2/17/2009	3.59	-0.09	6.3	3.3	0.0
	3/17/2009	4.03	0.00	10.3	2.3	0.0
	5/20/2009	3.08	-0.07	5.2	3.2	0.0
	6/16/2009	2.30	-0.03	2.1	4.7	0.0
	7/21/2009	3.75	0.00	2.1	6.0	0.0
	8/18/2009	3.81	0.00	3.4	7.1	0.0
	9/16/2009	2.00	-0.12	2.5	8.5	0.0
	11/18/2009	154	-0.66	2.2	7.5	0.0
	1/20/2010	11,280	-0.25	1.2	6.6	0.8
	3/16/2010	1.11	0.00	6.0	4.5	0.0
	4/20/2010	1.85	-0.18	7.0	3.4	0.0
	5/19/2010	3.88	-0.27	4.9	4.5	0.0
	6/17/2010	356	-0.12	0.7	0.9	0.0
	7/19/2010	1.15	0.00	0.6	9.7	0.0
	8/17/2010	2.92	-0.12	2.0	10.3	0.0
	9/22/2010	3.82	-0.28	2.3	13.4	0.0
	10/18/2010	2.50	-0.85	2.8	12.5	0.0

TABLE A-1. SUMMARY OF FIELD SCREENING MEASUREMENTS FROM NESTED SOIL VAPOR MONITORING WELLS AND MONITORING POINTS NEAR 507 NORTH OLIVE STREET
HARTORD PETROLEUM HYDROCARBON RELEAESE SITE
HARTFORD, ILLINOIS

Well location	Date	FID (ppmv)	Pressure/ Vacuum (in-H_2O)	Oxygen (%)	Carbon Dioxide (%)	Methane (%)
VMP-090S	1/18/2011	3.77	-2.15	7.2	5.1	0.0
	2/15/2011	3.77	-1.91	8.9	3.6	0.0
VP-001	2/17/2009	5.62	0.01	19.4	1.3	0.0
VP-004M	5/18/2005	340,000	0.00	3.8	10.0	--
	5/24/2005	290,000	0.00	6.7	6.1	--
	6/1/2005	340,000	-0.02	2.9	9.1	--
	6/7/2005	355,000	0.01	3.1	9.7	--
	6/21/2005	57.0	0.01	20.9	0.0	--
	7/19/2005	220,000	-0.02	2.1	11.2	5.5
	8/2/2005	371,000	0.00	1.4	11.8	6.4
	8/16/2005	415,286	-0.01	1.6	11.6	9.9
	9/1/2005	379,000	0.00	0.5	12.4	6.1
	9/27/2005	350,000	0.00	2.4	16.5	0.0
	10/11/2005	102,000	0.01	1.1	12.6	1.7
	10/25/2005	4,070	-0.02	20.6	0.3	0.0
	11/8/2005	56,800	-0.03	10.8	6.6	0.5
	11/21/2005	151,000	0.01	1.2	13.7	1.0
	12/6/2005	685,000	--	5.5	5.8	0.0
	12/20/2005	163,000	-0.05	2.7	14.1	2.6
	1/4/2006	156,000	-0.53	0.6	14.0	3.0
	1/17/2006	150,000	-0.01	0.7	13.5	3.1
	1/31/2006	276,000	-0.22	0.6	13.8	4.2
	2/14/2006	271,000	-0.20	3.8	13.7	4.3
	2/28/2006	267	-0.10	20.9	0.0	0.0
	3/14/2006	335,000	-0.01	0.6	13.7	4.8
	3/28/2006	324,000	-2.99	0.4	13.8	6.6

TABLE A-1. SUMMARY OF FIELD SCREENING MEASUREMENTS FROM NESTED SOIL VAPOR MONITORING WELLS AND MONITORING POINTS NEAR 507 NORTH OLIVE STREET
HARTORD PETROLEUM HYDROCARBON RELEAESE SITE
HARTFORD, ILLINOIS

Well location	Date	FID (ppmv)	Pressure/ Vacuum (in-H_2O)	Oxygen (%)	Carbon Dioxide (%)	Methane (%)
VP-004M	4/11/2006	373,000	--	1.8	13.4	7.9
	5/16/2006	420,000	--	1.1	12.8	11.3
	6/20/2006	940,000	0.01	0.3	12.7	23.0
	7/18/2006	114,000	-0.27	15.4	3.7	6.4
	8/15/2006	1,000,000	0.00	2.5	11.5	29.8
	9/19/2006	935,000	0.00	2.3	12.4	23.9
	10/17/2006	867,000	-0.17	1.0	12.9	20.4
	11/20/2006	402,000	0.02	2.2	12.6	11.7
	12/19/2006	1,000,000	-0.02	2.1	10.3	28.2
	1/16/2007	403,000	0.01	0.7	14.3	8.5
	3/20/2007	298,000	--	0.7	14.7	5.9
	4/17/2007	798,000	-1.02	0.7	12.8	21.3
	5/15/2007	251,000	0.00	0.8	13.5	11.2
	6/19/2007	378,000	-0.67	0.6	12.8	13.4
	7/17/2007	291,000	-0.02	2.8	12.7	8.5
	8/21/2007	129,000	-0.01	10.1	6.6	4.5
	9/18/2007	208,000	0.00	0.3	12.7	6.0
	10/16/2007	310,000	-0.02	3.3	12.3	5.7
	11/13/2007	190,000	-0.02	3.6	12.1	3.3
	1/16/2008	131,000	-0.06	6.5	11.3	1.7
	2/20/2008	103,000	-0.04	4.4	12.9	1.3
	3/19/2008	76,510	0.00	2.3	14.2	0.6
	4/16/2008	101,000	0.00	0.7	15.1	1.0
	5/20/2008	136,000	0.00	0.9	14.7	1.4
	6/17/2008	115,000	0.00	0.0	13.1	1.5
	8/18/2008	12,800 R	-0.02	18.7 R	1.5 R	0.2 R

TABLE A-1. SUMMARY OF FIELD SCREENING MEASUREMENTS FROM NESTED SOIL VAPOR MONITORING WELLS AND MONITORING POINTS NEAR 507 NORTH OLIVE STREET
HARTORD PETROLEUM HYDROCARBON RELEAESE SITE
HARTFORD, ILLINOIS

Well location	Date	FID (ppmv)	Pressure/ Vacuum (in-H_2O)	Oxygen (%)	Carbon Dioxide (%)	Methane (%)
VP-004M	9/17/2008	141,000	0.00	2.6	11.9	4.4
	10/21/2008	185,000	-0.23	2.9	11.8	6.2
	11/18/2008	302,000	-0.02	0.3	12.7	11.2
	1/20/2009	327,000	-0.01	2.2	13.9	15.7
	2/17/2009	152,000	0.00	6.1	10.1	6.9
	3/17/2009	200,000	0.00	3.3	12.0	7.1
	5/20/2009	420,000	0.00	2.0	11.0	11.5
	6/17/2009	246,000	0.00	3.2	10.4	7.2
	7/21/2009	291,000	0.00	2.4	10.4	9.7
	8/18/2009	252,000	-0.01	3.0	10.2	10.2
	9/15/2009	395,000	0.00	2.3	11.1	14.1
	10/21/2009	308,000	0.00	3.0	11.0	14.5
	11/17/2009	235,000	0.00	1.1	11.9	13.9
	1/21/2010	1,000,000	-0.01	3.5	9.9	34.1
	2/23/2010	950,000	0.00	3.7	11.7	32.4
	3/13/2010	495,000	0.00	2.5	11.8	20.7
	3/16/2010	5.58	-0.03	9.3	4.2	0.0
	3/20/2010	332,000	0.00	1.6	13.0	15.0
	3/21/2010	803,000	0.16	1.4	12.7	22.3
	3/22/2010	1,000,000	0.00	1.2	12.7	23.4
	3/23/2010	1,000,000	0.06	2.1	12.2	24.3
	3/24/2010	1,000,000	0.08	1.2	12.5	25.4
	4/20/2010	944,000	0.00	4.7	9.4	19.1
	9/21/2010	1,000,000	0.00	2.4	10.3	10.0
	10/18/2010	1,000,000	0.00	1.2	10.6	100.0
	11/16/2010	100,000	0.00	3.1	9.1	10.0

TABLE A-1. SUMMARY OF FIELD SCREENING MEASUREMENTS FROM NESTED SOIL VAPOR MONITORING WELLS AND MONITORING POINTS NEAR 507 NORTH OLIVE STREET
HARTORD PETROLEUM HYDROCARBON RELEAESE SITE
HARTFORD, ILLINOIS

Well location	Date	FID (ppmv)	Pressure/ Vacuum (in-H_2O)	Oxygen (%)	Carbon Dioxide (%)	Methane (%)
VP-004M	1/18/2011	1,000,000	-0.09	1.5	9.5	100.0
	2/15/2011	4.20	0.00	7.9	6.7	0.0
VP-004S	5/18/2005	31,000	0.00	8.6	2.9	--
	5/24/2005	30,450	-0.47	13.7	1.7	--
	6/1/2005	10,900	-0.02	17.9	0.8	--
	6/7/2005	20.0	-0.01	21.2	0.0	--
	6/21/2005	20,000	0.01	6.0	4.0	--
	7/19/2005	1,300	0.00	19.8	0.4	0.0
	8/2/2005	203	0.00	20.9	0.1	0.0
	8/16/2005	1,856	0.00	19.2	0.6	0.0
	9/1/2005	15,600	0.01	1.4	5.6	0.1
	9/27/2005	4,490	0.00	5.7	2.9	0.0
	10/11/2005	3,650	-0.28	4.0	5.3	0.0
	10/25/2005	584	-6.24	18.0	1.1	0.0
	11/8/2005	4,480	--	2.1	6.3	0.0
	11/22/2005	3,140	-0.01	6.1	5.5	0.0
	12/7/2005	3,250	--	12.0	4.4	0.0
	2/1/2006	113	-0.54	14.5	3.4	0.0
	5/16/2006	20,680	-0.01	0.9	5.7	1.0
	6/20/2006	65.0	-3.26	0.4	5.7	0.0
	7/18/2006	1,290	-18.60	1.2	6.2	0.1
	8/15/2006	5,210	--	2.1	6.1	0.3
	9/18/2007	2,010	0.00	0.2	5.4	0.1
	10/16/2007	118	--	1.5	7.6	0.0
	1/16/2008	4.66 R	-0.02	18.7 R	0.6 R	0.0 R
	2/20/2008	350	0.00	3.2	4.7	0.0

TABLE A-1. SUMMARY OF FIELD SCREENING MEASUREMENTS FROM NESTED SOIL VAPOR MONITORING WELLS AND MONITORING POINTS NEAR 507 NORTH OLIVE STREET
HARTORD PETROLEUM HYDROCARBON RELEAESE SITE
HARTFORD, ILLINOIS

Well location	Date	FID (ppmv)	Pressure/ Vacuum (in-H_2O)	Oxygen (%)	Carbon Dioxide (%)	Methane (%)
VP-004S	3/19/2008	3.23 R	0.00	5.1 R	3.6 R	0.0 R
	4/16/2008	3.81	-0.01	15.6	1.1	0.0
	5/20/2008	1.94 R	-0.01	19.5 R	0.2 R	0.0 R
	6/17/2008	0.85	0.00	0.6	3.4	0.0
	7/15/2008	1.81	-0.06	5.3	3.2	0.0
	8/18/2008	12.6	-0.02	4.8	4.0	8.9
	9/17/2008	1.41	0.00	9.8	3.6	0.0
	10/21/2008	0.90	-0.24	6.5	4.5	0.0
	11/18/2008	4.70	-0.01	8.2	4.6	0.0
	1/20/2009	1.92	-0.55	4.1	5.7	0.0
	2/17/2009	1.97	-0.02	11.1	3.7	0.0
	3/17/2009	19.5	0.00	8.6	4.6	0.0
	5/20/2009	5.11	0.00	5.5	4.3	0.0
	6/17/2009	6.50	-0.02	6.2	4.3	0.0
	7/21/2009	3.30	0.00	7.7	4.5	0.0
	9/15/2009	2.95	0.00	5.0	5.4	0.0
	10/21/2009	3.85	0.00	5.4	5.4	0.0
	11/17/2009	3.65	-0.57	5.2	6.2	0.0
	1/21/2010	20.2	0.09	20.9	0.0	0.0
	2/23/2010	3.11	0.00	16.6	2.3	0.0
	3/13/2010	29,130	-1.20	5.2	6.1	0.0
	3/16/2010	480,000	-0.05	1.6	11.1	16.6
	3/20/2010	1,940	0.35	13.4	4.2	0.0
	3/21/2010	3,100	-74.10	14.0	4.3	0.0
	3/22/2010	1,520	-0.28	17.5	2.7	0.0
	3/23/2010	5,600	0.00	18.2	2.2	0.0

TABLE A-1. SUMMARY OF FIELD SCREENING MEASUREMENTS FROM NESTED SOIL VAPOR MONITORING WELLS AND MONITORING POINTS NEAR 507 NORTH OLIVE STREET
HARTORD PETROLEUM HYDROCARBON RELEAESE SITE
HARTFORD, ILLINOIS

Well location	Date	FID (ppmv)	Pressure/ Vacuum (in-H_2O)	Oxygen (%)	Carbon Dioxide (%)	Methane (%)
VP-004S	3/24/2010	1,020	0.05	18.8	1.9	0.0
	4/20/2010	3.55	0.00	15.6	4.0	0.0
	5/19/2010	10,500	--	13.8	4.6	0.0
	5/19/2010	290	0.00	16.2	3.5	0.0
	6/18/2010	3.76	0.01	13.7	4.3	0.0
	7/19/2010	1.10	0.00	13.6	4.8	0.0
	8/17/2010	14.2	0.00	15.0	3.6	0.0
	9/21/2010	30.8	0.00	16.8	4.3	0.0
	10/18/2010	15.2	0.00	14.0	6.1	0.0
	11/16/2010	7.00	0.00	10.8	6.8	0.0
	1/18/2011	2.58	0.00	6.1	7.6	0.0
	2/15/2011	1,000,000	0.00	5.5	8.8	100.0

Notes:
ppmv - Parts per million by volume
in-H_2O - Inches of water
% - Percent
R - Rejected value

TABLE A-2. SUMMARY OF SOIL VAPOR ANALYTICAL RESULTS FROM NESTED SOIL VAPOR MONITORING WELLS AND MONITORING POINTS NEAR 507 NORTH OLIVE STREET, HARTORD PETROLEUM HYDROCARBON RELEAESE SITE HARTFORD, ILLINOIS

Well location	Sample Type	Method	Date	Benzene mg/m^3	Tolune mg/m^3	m,p-Xylene mg/m^3	o-Xylene mg/m^3	Total Xylene[1] mg/m^3	Hexane mg/m^3	1,2,4-Trimethyl-benzene mg/m^3	1,3,5-Trimethyl-benzene mg/m^3	Total Trimethyl-benzene[2] mg/m^3	Butane mg/m^3	Isopentane mg/m^3	Methyl cyclohexane mg/m^3	1,3- Butadiene mg/m^3
VP-001	Soil Vapor	TO-15	4/7/2004	ND(0.0020)	0.0075	0.0045	ND(0.0034)	0.0062	ND(0.011)	ND(0.0038)	ND(0.0038)	ND(0.0038)	ND(0.0073)	0.010	ND(0.012)	ND(0.0017)
VP-002	Soil Vapor	TO-15	4/7/2004	ND(0.0021)	ND(0.0031)	ND(0.0036)	ND(0.0036)	ND(0.0036)	ND(0.012)	ND(0.0041)	ND(0.0041)	ND(0.0041)	ND(0.0079)	ND(0.0098)	ND(0.013)	ND(0.0018)
VP-003	Soil Vapor	TO-15	4/8/2004	0.0031	0.032	0.012	0.0031	0.015	ND(0.010)	ND(0.0035)	ND(0.0035)	ND(0.0035)	0.042	0.045	ND(0.012)	ND(0.0016)
VP-004S	Soil Vapor	TO-15	4/8/2004	310	1000	490	160	650	1800	130	45	180	260	1700	700	ND(9.2)
VP-004M	Soil Vapor	TO-15	4/8/2004	990	1400	510	160	670	2900	94	ND(41)	110	480	2800	990	ND(18)
VP-004M	Soil Vapor	TO-15	8/10/2004	800	3700	1100	ND(480)	1300	7700	ND(540)	ND(540)	ND(540)	17000	26000	ND(1800)	ND(240)
VP-004S	Soil Vapor	TO-15	8/10/2004	0.93	19	18	ND(8.5)	22	280	ND(9.6)	ND(9.6)	ND(9.6)	400	820	56	ND(4.3)
VP-001	Soil Vapor	TO-15	8/10/2004	0.058	ND(0.025)	0.029	ND(0.029)	0.044	ND(0.094)	0.063	ND(0.033)	0.080	0.97	2.1	0.27	ND(0.015)
VP-002	Soil Vapor	TO-15	8/10/2004	0.070	0.013	0.096	0.048	0.14	0.075	0.091	0.054	0.14	0.15	0.31	0.10	ND(0.0017)
VP-003	Soil Vapor	TO-15	8/10/2004	0.0075	0.0072	0.0068	ND(0.0036)	0.0086	ND(0.012)	0.024	0.0065	0.030	0.041	0.33	0.097	ND(0.0018)
MP-042C	Soil Vapor	TO-15	8/12/2004	1.5	5.8	9.0	3.6	13	2.8	7.1	2.1	9.2	2.8	6.2	1.0	ND(0.025)
MP-042C - Dup	Soil Vapor	TO-15	8/12/2004	1.4	5.6	8.2	3.3	12	2.6	6.4	1.9	8.3	2.6	6.1	1.0	ND(0.025)
VP-002	Soil Vapor	TO-15	1/18/2005	0.093	0.081	0.21	0.087	0.30	0.93	ND(0.36)	ND(0.36)	ND(0.36)	12	55	--	ND(0.16)
VP-004S	Soil Vapor	TO-15	1/18/2005	4.3	3.5	ND(3.4)	ND(3.4)	ND(3.4)	3200	ND(48)	ND(48)	ND(48)	3200	7800	--	ND(21)
VP-004M	Soil Vapor	TO-15	1/18/2005	670	270	ND(140)	ND(140)	ND(140)	6900	ND(160)	ND(160)	ND(160)	13000	31000	--	ND(72)
MP-042C	Soil Vapor	TO-15	1/27/2005	1400	1400	ND(540)	ND(540)	ND(540)	4200	ND(620)	ND(620)	ND(620)	76000	72000	--	ND(280)
MP-037D	Soil Vapor	TO-15	2/21/2005	2200	2100	ND(480)	ND(480)	ND(480)	7900	ND(540)	ND(540)	ND(540)	80000	94000	--	ND(240)
VMP-090S	Soil Vapor	TO-15	2/22/2005	150	140	360	110	470	300	63	26	89	1900	3300	--	ND(11)
RW-005	Soil Vapor	TO-15	9/1/2005	920	960	490	140	630	3600	67	ND(42)	88	--	--	--	ND(42)
RW-005	Soil Vapor	TO-15	9/29/2005	1000	1600	890	270	1200	6400	85	36	120	--	--	--	350
RW-005	Soil Vapor	TO-15	10/6/2005	880	1200	300	ND(200)	400	6900	ND(200)	ND(200)	ND(200)	--	--	--	550
RW-005	Soil Vapor	TO-15	10/13/2005	210	490	280	84	360	1400	46	ND(25)	58	--	--	--	110

Notes:

[1] Total xylene is calculated by summing the m-, p-, and o- xylene isomers, using half the detection limit for non-detect results.

[2] Total trimethylbenzene is calculated by summing the 1, 2, 4- and 1, 3, 5- trimethylbenzene isomers, using half the detection limit for non-detect results.

mg/m^3 - Milligram per cubic meter

Dup - Blind Duplicate Sample

ND - Not detected

TABLE A-3. SUMMARY OF SUB-SLAB SOIL VAPOR AND INDOOR AIR FIELD SCREENING MEASUREMENTS, 507 NORTH OLIVE STREET
HARTORD PETROLEUM HYDROCARBON RELEAESE SITE
HARTFORD, ILLINOIS

Date	Maximum Indoor Air Location ID	FID (Direct Read) (ppmv)	Maximum Sub-Slab Location ID	FID (Direct Read) (ppmv)	FID (Tedlar Bag) (ppmv)	Pressure/ Vacuum (in-H_2O)	Oxygen (%)	Carbon Dioxide (%)	Methane (%)
2/24/2005	SE corner	--	SS4	--	--	5.33	--	--	--
3/31/2005	Stack A	1.92	--	--	--	--	--	--	--
4/1/2005	Ambient	27.98	SS8	27.8	--	-0.29	--	--	--
4/5/2005	Ambient	3.60	SSD2	8,330	--	--	--	--	--
4/7/2005	Ambient	5.34	Stack	14,100	--	--	--	--	--
4/12/2005	Ambient	9.82	SSD2	28,900	--	--	--	--	--
4/19/2005	Ambient	7.35	SSD2	9,813	--	--	--	--	--
4/26/2005	Ambient	34.62	SSD2	8,110	--	--	--	--	--
4/28/2005	--	--	SS4	29,000	--	-4.58	14.1	--	--
5/2/2005	Ambient	2.23	Stack	8,490	--	--	--	--	--
5/11/2005	Ambient	6.02	SSD2	7,653	--	--	25.0	--	--
5/17/2005	Bathroom	-7.85	SS1	31,000	--	-1.84	2.4	--	--
5/18/2005	E bedroom	16.73	SS1	30,500	--	-1.83	1.9	--	--
5/25/2005	Ambient	10.17	SS4	54,600	--	--	--	--	--
6/2/2005	Ambient	45.50	Stack	6,525	--	--	--	--	--
7/6/2005	Ambient	6138.00	SS1	582	--	-1.26	--	--	--
9/13/2005	Basement	54.52	SS4	27,000	--	-1.25	18.2	2.1	0.5
9/14/2005	Kitchen	39.57	SS4	--	--	-1.26	--	--	--
12/5/2005	Bathroom	6.09	SS4	4,500	--	0.00	20.0	0.4	0.3
12/6/2005	NE room	2.12	SS4	--	--	0.00	--	--	--
1/19/2006	Basement	8.41	--	--	--	--	--	--	--
3/15/2006	Kitchen	4.46	SS8	1,355	--	-0.11	20.5	0.7	0.1
3/16/2006	Bathroom	23.72	SS4	--	--	-0.19	--	--	--
6/22/2006	NE room	6.76	SS8	16,000	--	--	10.3	8.9	1.1
6/23/2006	Kitchen	5.81	SS4	--	--	-0.16	--	--	--
9/25/2006	Front room	2.25	SS8	624	--	--	18.1	3.4	0.0

TABLE A-3. SUMMARY OF SUB-SLAB SOIL VAPOR AND INDOOR AIR FIELD SCREENING MEASUREMENTS, 507 NORTH OLIVE STREET
HARTORD PETROLEUM HYDROCARBON RELEAESE SITE
HARTFORD, ILLINOIS

Date	Maximum Indoor Air Location ID	FID (Direct Read) (ppmv)	Maximum Sub-Slab Location ID	FID (Direct Read) (ppmv)	FID (Tedlar Bag) (ppmv)	Pressure/ Vacuum (in-H_2O)	Oxygen (%)	Carbon Dioxide (%)	Methane (%)
9/26/2006	Drain	7.21	SS4	--	--	-0.14	--	--	--
10/13/2006	Post filter	--	--	--	--	--	--	--	--
1/3/2007	NE room	8.34	SS8	163,000	--	--	9.0	8.4	8.3
1/4/2007	Basement	3.90	SS4	--	--	-0.10	--	--	--
4/2/2007	Bedroom	9.16	SS3	98,000	--	-0.09	7.0	9.6	5.7
4/3/2007	NE drain	90.43	SS4	--	--	-0.09	--	--	--
4/25/2007	Living room	5.04	SS8	1,000,000	--	--	9.1	8.7	31.7
5/9/2007	Bathroom	3.59	SSDS	587	--	0.00	--	--	0.0
5/29/2007	Kitchen	2.74	SS8	127,000	--	--	16.4	3.6	2.9
5/30/2007	Basement	2.09	--	--	--	--	--	--	--
7/19/2007	Basement	5.95	SS8	203	--	--	6.5	15.7	0.0
7/20/2007	Bathroom	9.07	SS4	--	--	-0.09	--	--	--
10/11/2007	NE room	5.62	SSD1	4.72	--	--	20.9	0.2	0.0
10/12/2007	Bathroom	5.72	SS4	--	--	-0.08	--	--	--
1/21/2008	Drain	2.97	SSD1	4.87	--	--	20.9	0.1	0.0
1/22/2008	Front room	2.34	SS4	--	--	-0.03	--	--	--
4/21/2008	NE room	5.21	SSD1	4.53	--	--	20.9	0.1	0.0
4/22/2008	NE room	4.91	SS4	--	--	-0.03	--	--	--
7/29/2008	Kitchen	4.01	SSD1	7.92	--	-0.24	20.9	0.1	0.0
7/30/2008	Kitchen	5.42	SS4	--	--	-0.04	--	--	--
10/23/2008	N bedorom	3.64	SSD1	11.8	--	-1.50	20.9	0.1	0.0
10/24/2008	N bedorom	14.48	SS4	--	--	-0.50	--	--	--
6/23/2009	Bathroom	3.51	SSD1	--	14.6	-0.44	20.7	0.3	0.0
6/24/2009	Basement	2.36	SS4	--	--	-0.25	--	--	--
10/1/2009	Drain	1.95	SSD2	--	290	-0.31	20.6	0.1	0.0
10/2/2009	Drain	2.57	SS4	--	--	-0.22	--	--	--

TABLE A-3. SUMMARY OF SUB-SLAB SOIL VAPOR AND INDOOR AIR FIELD SCREENING MEASUREMENTS, 507 NORTH OLIVE STREET
HARTORD PETROLEUM HYDROCARBON RELEAESE SITE
HARTFORD, ILLINOIS

Date	Maximum Indoor Air Location ID	FID (Direct Read) (ppmv)	Maximum Sub-Slab Location ID	FID (Direct Read) (ppmv)	FID (Tedlar Bag) (ppmv)	Pressure/ Vacuum (in-H_2O)	Oxygen (%)	Carbon Dioxide (%)	Methane (%)
1/28/2010	Computer Room	1.52	SS7	--	0.48	0.20	20.8	0.0	0.0
1/29/2010	Living Room	0.38	SS7	--	0.50	0.00	20.9	0.0	0.0
2/1/2010	Living Room	0.83	SSDS1	--	8.75	0.00	20.8	0.1	0.0
2/2/2010	Basement	0.24	SSDS2	--	37.75	-0.26	20.7	0.0	0.0
3/16/2010	Basement	0.37	SS7	--	1.43	0.00	20.8	0.0	0.0
3/17/2010	Basement	0.00	SS7	--	1.03	0.00	20.8	0.0	0.0
3/18/2010	Basement	1.08	SS7	--	1.02	0.54	20.9	0.0	0.0
3/19/2010	Bathroom in Basement	2.38	SS4	--	3.18	-0.23	20.7	0.1	0.0
3/20/2010	Dininng Room	6.34	SS7	--	3.10	0.00	20.7	0.0	0.0
3/21/2010	Drain in Basement	2.01	SS7	--	1.24	0.00	20.8	0.0	0.0
3/22/2010	Kitchen	3.92	SS7	--	3.42	0.00	20.8	0.0	0.0
5/18/2010	Dining Room	9.51	SS4	2,290	2,280	-0.29	20.3	0.4	0.1
5/19/2010	Kitchen	1.23	SS4	330	--	-0.31	--	--	--
5/20/2010	Kitchen	0.96	SS4	31.5	--	-0.31	--	--	--
6/14/2010	Living Room	5.36	SS4	216	--	-0.32	--	--	--
7/13/2010	Kitchen	7.92	SS4	8.29	--	-0.26	--	--	--
7/26/2010	Kitchen	1.29	SS4	0.00	--	-1.10	--	--	--
7/27/2010	Drain in basement	1.13	SS4	0.00	--	-1.12	--	--	--
7/28/2010	Drain in basement	0.76	SS4	0.00	--	-1.10	--	--	--
7/29/2010	--	--	SS4	0.00	--	-1.10	--	--	--
7/30/2010	Kitchen	1.26	SS4	0.00	--	-1.04	--	--	--
7/31/2010	Front porch	0.15	SS4	--	--	--	--	--	--
9/8/2010	Dining room	0.63	SS4	178,000	95,800	-0.71	15.8	3.4	5.1
9/9/2010	Drain in basement	1.65	SS4	274,000	112,000	-1.02	15.7	3.4	6.1
9/10/2010	Drain in basement	0.80	SS4	560,000	130,000	-2.17	15.8	3.8	7.0
9/13/2010	Living Room	1.50	SS8	140,000	298,000	-0.56	6.3	10.0	11.0

TABLE A-3. SUMMARY OF SUB-SLAB SOIL VAPOR AND INDOOR AIR FIELD SCREENING MEASUREMENTS, 507 NORTH OLIVE STREET
HARTORD PETROLEUM HYDROCARBON RELEAESE SITE
HARTFORD, ILLINOIS

Date	Maximum Indoor Air Location ID	FID (Direct Read) (ppmv)	Maximum Sub-Slab Location ID	FID (Direct Read) (ppmv)	FID (Tedlar Bag) (ppmv)	Pressure/ Vacuum (in-H_2O)	Oxygen (%)	Carbon Dioxide (%)	Methane (%)
9/14/2010	Basement	1.23	SS8	234,000	567,000	-0.59	4.6	10.8	15.8
9/15/2010	Drain in basement	0.62	SS8	208,000	483,000	-0.36	4.3	11.0	15.2
9/16/2010	Drain in basement	0.64	SS8	240,000	690,000	-0.37	4.8	10.9	17.2
9/17/2010	Basement	0.30	SS8	156,000	214,000	-0.12	13.1	5.6	8.4
9/20/2010	Drain in basement	0.93	SS8	128,000	205,000	-0.09	13.6	5.2	8.7
9/21/2010	Drain in basement	0.42	SS8	99,100	163,000	-0.32	14.0	5.3	6.9
9/22/2010	Drain in basement	0.31	SS8	163,000	68,000	-0.23	15.9	1.9	1.3
9/23/2010	Kitchen	0.44	SS8	214,000	418,000	-0.29	5.0	11.6	13.7
9/24/2010	Drain in basement	0.93	SS8	165,000	203,000	-0.24	9.8	8.4	8.5
9/27/2010	Drain in basement	0.57	SS8	87,100	117,000	-0.30	10.6	8.5	5.1
9/28/2010	Dining Room	2.32	SS8	58,500	53,400	-0.09	14.9	4.7	2.4
9/29/2010	Drain in basement	1.43	SS8	42,500	36,100	-0.10	15.7	3.9	1.7
9/30/2010	Basement	0.33	SS8	114,000	68,500	-0.32	12.8	6.7	3.1
10/1/2010	Drain in basement	1.72	SS8	69,500	45,300	-0.12	15.6	4.1	2.0
10/4/2010	Basement	0.00	SS8	131,000	290,000	-0.19	8.2	13.0	10.5
10/5/2010	Living Room	1.81	SS8	91,800	165,000	-0.19	6.6	11.3	7.0
10/6/2010	Basement	2.70	SS8	190,000	147,000	-0.21	11.7	7.1	6.5
10/7/2010	Living Room	2.14	SS8	225,000	202,000	-0.21	11.1	7.7	8.7
1/12/2011	Basement	0.00	SS4	0.00	0.00	-0.36	20.1	0.8	0.0
1/26/2011	Living room	9.85	SS4	0.00	0.00	-0.39	20.4	0.0	0.0
2/9/2011	Dining room	0.05	SS4	0.00	0.00	0.00	19.6	1.1	0.0
2/22/2011	Dining room	0.05	SS4	0.00	0.00	0.00	19.5	1.3	0.0
2/23/2011	Dining room	0.05	--	--	--	--	--	--	--
3/9/2011	Dining room	3.23	SS4	0.00	0.00	0.00	20.1	1.0	0.0
3/22/2011	Basement	0.31	SS4	0.00	0.00	-0.38	19.7	1.0	0.0
4/5/2011	Basement	0.64	SS4	0.00	0.00	-0.39	20.5	0.8	0.0

TABLE A-3. SUMMARY OF SUB-SLAB SOIL VAPOR AND INDOOR AIR FIELD SCREENING MEASUREMENTS, 507 NORTH OLIVE STREET
HARTORD PETROLEUM HYDROCARBON RELEAESE SITE
HARTFORD, ILLINOIS

Date	Maximum Indoor Air Location ID	FID (Direct Read) (ppmv)	Maximum Sub-Slab Location ID	FID (Direct Read) (ppmv)	FID (Tedlar Bag) (ppmv)	Pressure/ Vacuum (in-H_2O)	Oxygen (%)	Carbon Dioxide (%)	Methane (%)
4/19/2011	Dining room	2.32	SS4	0.00	0.00	-0.51	19.9	0.7	0.0
4/26/2011	Basement	1.88	SS4	0.00	0.00	-0.44	19.8	0.7	0.0
5/4/2011	Basement	0.43	SS4	0.00	0.00	-0.48	19.7	0.7	0.0
5/10/2011	Drain in basement	1.31	SS7	6.80	61.0	0.00	20.7	0.0	0.0
5/17/2011	Basement	2.53	SS7	2.30	12.0	0.00	20.9	0.0	0.0
5/25/2011	Kitchen	0.28	SS4	2,700	2,200	-0.43	17.8	1.4	0.1
5/26/2011	Kitchen	1.92	SS4	7,400	5,500	-0.44	17.5	1.5	0.2
5/27/2011	Kitchen	2.11	SS4	3,200	3,500	-0.43	18.0	1.5	0.2
5/28/2011	Basement	0.77	SS4	950	1,100	-0.41	18.5	1.4	0.0
5/29/2011	Kitchen	0.12	SS4	250	--	-0.40	--	--	--
6/2/2011	Dining room	8.55	SS4	0.00	--	-0.38	--	--	--
6/7/2011	Basement	2.21	SS4	140	--	-0.38	--	--	--
6/14/2011	Basement	0.96	SS4	5,000	4,500	-0.43	17.3	2.1	0.3
6/15/2011	Drain in basement	1.18	SS4	12,000	7,700	-0.37	16.9	2.4	0.5
6/16/2011	Kitchen	7.63	SS4	7,200	7,250	-0.37	17.0	2.5	0.4
6/17/2011	Drain in basement	1.30	SS4	8,200	9,400	-0.39	16.9	2.7	0.6
6/20/2011	NE bedroom	0.71	SS4	92,000	42,500	-0.35	14.1	4.0	2.4
6/21/2011	Basement	0.67	SS4	40,000	32,000	-0.36	13.5	4.5	1.8
6/22/2011	Kitchen	3.89	SS4	30,000	25,800	-0.36	13.1	4.6	1.5
6/23/2011	Dining room	2.54	SS4	30,000	20,800	-0.35	13.1	4.7	1.2
6/24/2011	Kitchen	1.71	SS4	31,000	23,500	-0.35	12.8	4.9	1.3
6/27/2011	Drain in basement	0.71	SS4	120,000	110,000	-0.33	11.7	5.3	5.6
6/28/2011	Dining room	9.53	SS4	110,000	92,500	-0.33	11.2	5.6	4.9
6/29/2011	Drain in basement	4.63	SS4	70,000	68,000	-0.32	11.7	5.2	3.6
6/30/2011	Drain in basement	2.13	SS4	80,000	75,000	-0.32	11.1	5.6	3.9
7/1/2011	Basement	3.16	SS4	120,000	91,000	-0.33	10.8	6.3	4.5

TABLE A-3. SUMMARY OF SUB-SLAB SOIL VAPOR AND INDOOR AIR FIELD SCREENING MEASUREMENTS, 507 NORTH OLIVE STREET HARTORD PETROLEUM HYDROCARBON RELEAESE SITE HARTFORD, ILLINOIS

Date	Maximum Indoor Air Location ID	FID (Direct Read) (ppmv)	Maximum Sub-Slab Location ID	FID (Direct Read) (ppmv)	FID (Tedlar Bag) (ppmv)	Pressure/ Vacuum (in-H_2O)	Oxygen (%)	Carbon Dioxide (%)	Methane (%)
7/5/2011	Drain in basement	3.11	SS4	120,000	99,200	-0.32	9.7	6.2	4.8
7/6/2011	--	--	--	--	--	--	--	--	--
7/7/2011	Basement	5.93	SS4	100,000	89,500	-0.33	10.3	5.8	4.7
7/8/2011	Basement	4.51	SS4	130,000	125,000	-0.33	9.8	6.1	6.4
7/11/2011	Basement	2.35	SS4	400,000	390,000	-0.32	6.8	7.0	16.4
7/12/2011	--	--	--	--	--	--	--	--	--
7/13/2011	Basement	2.21	SS4	550,000	525,000	-0.33	7.8	6.9	19.3
7/14/2011	Basement	2.85	SS4	350,000	335,000	-0.33	8.1	6.7	15.7
7/15/2011	Basement	3.27	SS4	600,000	575,000	-0.30	6.7	7.0	21.0
7/18/2011	Basement	2.18	SS4	1,000,000	940,000	-0.32	5.7	7.4	27.8
7/19/2011	Basement	0.53	SS4	1,000,000	1,000,000	-0.32	5.3	7.6	29.0
7/20/2011	Drain in basement	0.76	SS4	1,000,000	920,000	-0.30	6.3	7.2	26.3
7/21/2011	--	--	--	--	--	--	--	--	--
7/22/2011	Basement	2.66	SS4	255,000	270,000	-0.32	8.9	6.5	12.5
7/25/2011	Basement	2.57	SS4	175,000	185,000	-0.36	11.6	5.6	9.3
7/26/2011	Basement	3.15	SS4	96,000	99,000	-0.35	12.2	5.0	5.4
7/27/2011	Kitchen	1.81	SS4	48,000	51,400	-0.38	13.2	4.8	2.9
7/28/2011	Basement	0.55	SS4	23,000	22,800	-0.40	14.8	3.6	1.3
7/29/2011	Basement	1.15	SS4	14,500	11,500	-0.42	15.8	3.1	0.7
8/1/2011	Living room	8.54	SS4	24,500	20,300	-0.44	15.8	2.8	1.2
8/2/2011	Basement	0.46	SS4	12,000	11,900	-0.48	15.8	6.7	0.7
8/3/2011	Basement	0.63	SS4	5,700	5,900	-0.48	17.2	2.2	0.4
8/4/2011	Basement	1.38	SS4	2,700	2,900	-0.49	17.3	2.3	0.2
8/5/2011	Drain in basement	3.08	SS4	1,100	1,300	-0.49	17.6	2.3	0.1
8/8/2011	Basement	2.01	SS4	5,800	6,000	-0.48	17.3	2.0	0.4
8/9/2011	Basement	1.47	SS4	2,700	2,900	-0.50	17.8	2.0	0.2

TABLE A-3. SUMMARY OF SUB-SLAB SOIL VAPOR AND INDOOR AIR FIELD SCREENING MEASUREMENTS, 507 NORTH OLIVE STREET
HARTORD PETROLEUM HYDROCARBON RELEAESE SITE
HARTFORD, ILLINOIS

Date	Maximum Indoor Air Location ID	FID (Direct Read) (ppmv)	Maximum Sub-Slab Location ID	FID (Direct Read) (ppmv)	FID (Tedlar Bag) (ppmv)	Pressure/ Vacuum (in-H_2O)	Oxygen (%)	Carbon Dioxide (%)	Methane (%)
8/10/2011	Basement	1.48	SS4	1,000	1,100	-0.50	17.7	2.0	0.1
8/11/2011	Drain in basement	3.37	SS4	160	--	-0.49	--	--	--
8/15/2011	Basement	2.81	SS4	27,000	23,400	-0.52	15.0	4.8	1.3
8/16/2011	Drain in basement	4.08	SS4	12,000	11,000	-0.54	15.1	4.9	0.6
8/17/2011	Drain in basement	2.81	SS4	900	980	-0.55	18.3	1.9	0.1
8/18/2011	Drain in basement	2.98	SS4	215	--	-0.52	--	--	--
8/22/2011	Drain in basement	2.63	SS4	4,700	4,500	-1.85	17.0	2.5	0.3
8/23/2011	Living room	7.67	SS4	9,700	9,500	-2.02	16.8	2.7	0.6
8/24/2011	Kitchen	1.42	SS4	1,800	1,900	-0.93	18.2	2.1	0.1
8/25/2011	Living room	1.41	SS4	510	600	-0.95	18.5	2.2	0.0
8/26/2011	Drain in basement	1.86	SS4	140	--	-0.95	--	--	--
8/29/2011	Drain in basement	3.09	SS4	2,300	2,500	-1.01	18.2	2.1	0.2
8/30/2011	Dining room	2.48	SS4	300	--	-0.99	--	--	--
9/6/2011	Basement	0.00	SS4	3,200	3,300	-1.09	18.9	1.6	0.2
9/7/2011	Basement	0.00	SS4	440	490	-1.06	19.0	1.4	0.0
9/8/2011	Basement	0.00	SS4	35.0	--	-1.10	--	--	--
9/12/2011	Basement	0.35	SS4	3.00	--	-0.60	--	--	--
9/19/2011	Kitchen	3.36	SS4	0.00	--	-0.61	--	--	--
9/26/2011	Basement	3.15	SS4	0.00	--	-0.60	--	--	--
10/3/2011	Basement	2.65	SS4	25,000	16,500	-0.58	15.7	2.8	1.2
10/4/2011	Basement	6.35	SS4	2,600	3,000	-0.58	15.7	2.7	0.2
10/5/2011	Drain in basement	1.72	SS4	7.50	--	-0.58	--	--	--
10/10/2011	Basement	0.00	SS4	0.00	--	-0.55	--	--	--
10/20/2011	Basement	0.00	SS4	0.00	--	-0.55	--	--	--
10/26/2011	Kitchen	0.83	SS4	0.00	--	-0.62	--	--	--
11/2/2011	Drain in basement	0.80	SS4	6,400	6,100	-0.61	18.2	1.7	0.4

TABLE A-3. SUMMARY OF SUB-SLAB SOIL VAPOR AND INDOOR AIR FIELD SCREENING MEASUREMENTS, 507 NORTH OLIVE STREET
HARTORD PETROLEUM HYDROCARBON RELEAESE SITE
HARTFORD, ILLINOIS

Date	Maximum Indoor Air Location ID	FID (Direct Read) (ppmv)	Maximum Sub-Slab Location ID	FID (Direct Read) (ppmv)	FID (Tedlar Bag) (ppmv)	Pressure/ Vacuum (in-H_2O)	Oxygen (%)	Carbon Dioxide (%)	Methane (%)
11/3/2011	--	--	--	--	--	--	--	--	--
11/4/2011	Basement	3.45	SS4	0.00	--	-0.64	--	--	--
11/9/2011	Dining room	0.23	SS4	0.00	--	-0.64	--	--	--
11/16/2011	Living room	1.80	SS4	0.00	--	-0.61	--	--	--
11/23/2011	Kitchen	1.20	SS4	0.00	--	-0.55	--	--	--
11/30/2011	Kitchen	1.50	SS4	0.00	--	-0.47	--	--	--
12/7/2011	Kitchen	0.18	SS4	0.00	--	0.00	--	--	--
12/14/2011	Kitchen	0.84	SS4	0.00	--	-0.44	--	--	--
12/21/2011	Kitchen	0.30	SS4	0.00	--	-0.44	--	--	--
1/4/2012	Kitchen	0.74	SS4	0.00	--	-0.25	--	--	--
1/18/2012	Kitchen	1.20	SS4	0.00	--	0.00	--	--	--
1/25/2012	Kitchen	3.75	SS4	0.00	--	-0.41	--	--	--
2/1/2012	Dining room	1.10	SS4	0.00	--	-0.41	--	--	--
2/8/2012	Living room	1.52	SS4	0.00	--	-0.42	--	--	--
2/15/2012	Kitchen	3.05	SS4	0.00	--	-0.39	--	--	--
2/22/2012	Living room	1.15	SS4	0.00	--	-0.36	--	--	--
2/29/2012	Basement	1.05	SS4	0.00	--	-0.36	--	--	--
3/7/2012	Kitchen	0.64	SS4	0.00	--	-0.35	--	--	--
3/14/2012	--	--	SS4	--	--	--	--	--	--
3/21/2012	Basement	0.00	SS4	0.00	--	-0.34	--	--	--
3/28/2012	Basement	0.00	SS4	0.00	--	-0.35	--	--	--
4/4/2012	Basement	0.00	SS4	0.00	--	-0.33	--	--	--
4/11/2012	Basement	0.31	SS4	0.00	--	-0.34	--	--	--
4/18/2012	Basement	3.60	SS4	0.00	--	-0.35	--	--	--
4/25/2012	Living room	12.23	SS4	320	--	-0.35	--	--	--
4/26/2012	Basement	0.00	SS4	1,700	1,600	-0.33	19.4	0.8	0.1

TABLE A-3. SUMMARY OF SUB-SLAB SOIL VAPOR AND INDOOR AIR FIELD SCREENING MEASUREMENTS, 507 NORTH OLIVE STREET
HARTORD PETROLEUM HYDROCARBON RELEAESE SITE
HARTFORD, ILLINOIS

Date	Maximum Indoor Air Location ID	FID (Direct Read) (ppmv)	Maximum Sub-Slab Location ID	FID (Direct Read) (ppmv)	FID (Tedlar Bag) (ppmv)	Pressure/ Vacuum (in-H_2O)	Oxygen (%)	Carbon Dioxide (%)	Methane (%)
4/27/2012	Basement	0.00	SS4	550	600	-0.33	19.0	1.0	0.0
4/30/2012	Dining room	6.50	SS4	0.00	--	-0.36	--	--	--
5/2/2012	Basement	0.90	SS4	0.00	--	-0.35	--	--	--
5/9/2012	Dining room	0.95	SS4	0.00	--	-0.35	--	--	--
5/16/2012	Basement	0.00	SS4	0.00	--	-0.32	--	--	--
5/23/2012	Basement	0.21	SS4	0.00	--	-0.33	--	--	--
5/30/2012	Kitchen	0.67	SS4	0.00	--	-0.31	--	--	--
6/6/2012	Basement	0.00	SS4	0.00	--	-0.28	--	--	--
6/13/2012	Dining room	0.65	SS4	19.5	--	-0.27	--	--	--
6/20/2012	Kitchen	7.45	SS4	0.00	--	-0.26	--	--	--
6/27/2012	Front porch	0.86	SS4	0.00	--	-0.25	--	--	--
7/11/2012	Dining room	1.79	SS4	0.00	--	-0.25	--	--	--
7/18/2012	Kitchen	0.60	SS4	0.00	--	-0.23	--	--	--
7/25/2012	Drain in basement	2.80	SS4	0.00	--	-0.20	--	--	--
8/1/2012	Dining room	0.25	SS4	0.00	--	-0.21	--	--	--
8/8/2012	Dining room	2.20	SS4	0.00	--	-0.13	--	--	--
8/15/2012	Kitchen	1.17	SS4	0.00	--	-0.22	--	--	--
8/22/2012	Kitchen	2.30	SS4	0.00	--	-0.31	--	--	--
8/29/2012	Kitchen	1.10	SS4	0.00	--	-0.31	--	--	--
9/5/2012	Kitchen	1.72	SS4	0.00	--	-0.33	--	--	--
9/12/2012	Basement	0.00	SS4	0.00	--	-0.31	--	--	--
9/19/2012	Kitchen	1.00	SS4	0.00	--	-0.23	--	--	--
9/26/2012	Kitchen	1.79	SS4	0.00	--	-0.35	--	--	--
10/2/2012	Dining room	1.20	SS4	0.00	--	-0.31	--	--	--
10/10/2012	Basement	0.00	SS4	0.00	--	-0.28	--	--	--
10/17/2012	Kitchen	1.20	SS4	0.00	--	-0.21	--	--	--

TABLE A-3. SUMMARY OF SUB-SLAB SOIL VAPOR AND INDOOR AIR FIELD SCREENING MEASUREMENTS, 507 NORTH OLIVE STREET
HARTORD PETROLEUM HYDROCARBON RELEAESE SITE
HARTFORD, ILLINOIS

Date	Maximum Indoor Air Location ID	FID (Direct Read) (ppmv)	Maximum Sub-Slab Location ID	FID (Direct Read) (ppmv)	FID (Tedlar Bag) (ppmv)	Pressure/ Vacuum (in-H_2O)	Oxygen (%)	Carbon Dioxide (%)	Methane (%)
10/24/2012	Basement	1.30	SS4	0.00	--	-0.30	--	--	--
10/31/2012	Kitchen	1.26	SS4	0.00	--	-0.30	--	--	--
11/7/2012	Living room	0.40	SS4	0.00	--	-0.27	--	--	--
11/14/2012	Living room	2.00	SS4	0.00	--	-0.23	--	--	--
11/21/2012	Kitchen	1.10	SS4	0.00	--	-0.28	--	--	--
11/28/2012	Kitchen	0.45	SS4	0.00	--	-0.26	--	--	--
12/5/2012	--	--	SS4	--	--	--	--	--	--
12/12/2012	Dining room	2.60	SS4	0.00	--	-0.13	--	--	--
12/19/2012	Basement	1.80	SS4	0.00	--	-0.26	--	--	--
1/2/2013	Kitchen	1.10	SS4	0.00	--	-0.29	--	--	--
1/9/2013	Dining room	6.30	SS4	0.00	--	-0.22	--	--	--
1/16/2013	Basement	0.00	SS4	0.00	--	-0.26	--	--	--
1/23/2013	Basement	0.00	SS4	0.00	--	-0.06	--	--	--
1/30/2013	Basement	0.50	SS4	0.00	--	-0.27	--	--	--
2/6/2013	Dining room	1.11	SS4	0.00	--	-0.21	--	--	--
2/13/2013	Basement	0.00	SS4	0.00	--	-0.20	--	--	--
2/20/2013	Drain in basement	--	SS4	--	--	--	--	--	--
2/27/2013	Basement	0.00	SS4	0.00	--	-0.20	--	--	--
3/6/2013	Basement	0.00	SS2	0.00	--	0.00	--	--	--
3/13/2013	Basement	0.00	SS4	0.00	--	-0.21	--	--	--
3/15/2013	Kitchen	3.50	SS4	0.00	--	-0.21	--	--	--
3/18/2013	Basement	1.20	SS4	59.0	--	-0.24	--	--	--
3/19/2013	Basement	0.30	SS4	2.00	--	-0.22	--	--	--
3/27/2013	Kitchen	0.60	SS4	0.00	--	-0.21	--	--	--
4/3/2013	Kitchen	0.60	SS4	0.00	--	-0.23	--	--	--
4/10/2013	Kitchen	2.10	SS4	0.00	--	-0.21	--	--	--

TABLE A-3. SUMMARY OF SUB-SLAB SOIL VAPOR AND INDOOR AIR FIELD SCREENING MEASUREMENTS, 507 NORTH OLIVE STREET
HARTORD PETROLEUM HYDROCARBON RELEAESE SITE
HARTFORD, ILLINOIS

Date	Maximum Indoor Air Location ID	FID (Direct Read) (ppmv)	Maximum Sub-Slab Location ID	FID (Direct Read) (ppmv)	FID (Tedlar Bag) (ppmv)	Pressure/ Vacuum (in-H_2O)	Oxygen (%)	Carbon Dioxide (%)	Methane (%)
4/15/2013	Basement	0.50	SS1	0.00	--	-0.27	--	--	--
4/17/2013	Basement	6.10	SS1	0.0	--	-0.27	--	--	--
4/19/2013	Kitchen	2.70	SS1	1.50	--	-0.38	--	--	--
4/22/2013	Drain in basement	1.00	SS4	340	--	-0.36	--	--	--
4/24/2013	Basement	0.50	SS4	99.0	--	-0.37	--	--	--
4/25/2013	Basement	1.30	SS4	15.0	--	-0.37	--	--	--
4/26/2013	Basement	0.00	SS4	3.80	--	-0.35	--	--	--
4/29/2013	Basement	1.50	SS4	0.00	--	-0.38	--	--	--
5/1/2013	Basement	0.00	SS4	0.00	--	-0.35	--	--	--

Notes:
Maximum FID results are displayed for indoor air and sub-slab field screening on each sample date
ppmv - Parts per million by volume
in-H_2O - Inches of water
% - Percent

TABLE A-4. SUMMARY OF SUB-SLAB SOIL VAPOR AND INDOOR AIR ANALYTICAL RESULTS, 507 NORTH OLIVE STREET
HARTORD PETROLEUM HYDROCARBON RELEAESE SITE
HARTFORD, ILLINOIS

Location ID	Sample Type	Method	Date	Dilution Factor	Benzene mg/m^3	Tolune mg/m^3	m,p-Xylene mg/m^3	o-Xylene mg/m^3	Total Xylene[1] mg/m^3	Hexane mg/m^3	1,2,4-Trimethyl-benzene mg/m^3	1,3,5-Trimethyl-benzene mg/m^3	Total Trimethyl-benzene[2] mg/m^3	Butane mg/m^3	Isopentane mg/m^3	Methyl cyclohexane mg/m^3	1,3- Butadiene mg/m^3
Basement	Indoor Air	TO-15	2/26/2004	1.58	0.0045	0.016	ND(0.0035)	ND(0.0035)	ND(0.0035)	0.011	ND(0.0039)	ND(0.0039)	ND(0.0039)	**0.13**	0.057	ND(0.013)	ND(0.0018)
Basement	Indoor Air	TO-15	3/12/2004	1.58	ND(0.0026)	0.0064	0.0090	ND(0.0035)	0.011	ND(0.011)	ND(0.0039)	ND(0.0039)	ND(0.0039)	0.020	0.020	ND(0.013)	ND(0.0018)
1st Floor	Indoor Air	TO-15	4/6/2004	3.66	0.014	0.023	0.023	ND(0.0081)	0.027	ND(0.026)	ND(0.0091)	ND(0.0091)	**ND(0.0091)**	**0.19**	**0.22**	ND(0.030)	**ND(0.0041)**
Basement	Indoor Air	TO-15		--	0.011	0.012	0.016	0.0048	0.021	0.014	ND(0.0039)	ND(0.0039)	ND(0.0039)	**0.12**	**0.13**	ND(0.013)	ND(0.0018)
SS1	Sub-Slab	TO-15	5/17/2005	4670	**13**	**12**	18	ND(10)	**23**	**180**	ND(11)	ND(11)	**ND(11)**	**1500**	**1500**	**110**	**ND(5.2)**
SS2	Sub-Slab	TO-15		1.83	ND(0.0029)	0.037	0.016	0.0087	0.025	ND(0.0032)	ND(0.0045)	ND(0.0045)	ND(0.0045)	0.040	0.026	ND(0.0037)	ND(0.0020)
SS3	Sub-Slab	TO-15		1.96	ND(0.0031)	0.011	ND(0.0042)	ND(0.0042)	ND(0.0042)	0.0036	ND(0.0048)	ND(0.0048)	ND(0.0048)	0.053	0.032	ND(0.0039)	ND(0.0022)
SS4	Sub-Slab	TO-15		3820	**9.2**	**7.8**	14	ND(8.3)	**18**	**76**	ND(9.4)	ND(9.4)	**ND(9.4)**	**1400**	**1000**	**40**	**ND(4.2)**
SS5	Sub-Slab	TO-15		1.83	ND(0.0029)	0.012	ND(0.0040)	ND(0.0040)	ND(0.0040)	ND(0.0032)	ND(0.0045)	ND(0.0045)	ND(0.0045)	0.043	0.029	ND(0.0037)	ND(0.0020)
SS6	Sub-Slab	TO-15		1.83	ND(0.0029)	0.0044	ND(0.0040)	ND(0.0040)	ND(0.0040)	ND(0.0032)	ND(0.0045)	ND(0.0045)	ND(0.0045)	0.011	ND(0.011)	ND(0.0037)	ND(0.0020)
SS7	Sub-Slab	TO-15		4.23	ND(0.0068)	0.012	ND(0.0092)	ND(0.0092)	ND(0.0092)	ND(0.0074)	ND(0.010)	ND(0.010)	ND(0.010)	0.034	0.028	ND(0.0085)	ND(0.0047)
SS8	Sub-Slab	TO-15		1.75	ND(0.0028)	ND(0.0033)	ND(0.0038)	ND(0.0038)	ND(0.0038)	ND(0.0031)	ND(0.0043)	ND(0.0043)	ND(0.0043)	ND(0.0083)	ND(0.010)	ND(0.0035)	ND(0.0019)
SS9	Sub-Slab	TO-15		2.23	ND(0.0036)	0.011	ND(0.0048)	ND(0.0048)	ND(0.0048)	0.0041	ND(0.0055)	ND(0.0055)	ND(0.0055)	0.044	0.032	ND(0.0045)	ND(0.0025)
Basement	Indoor Air	TO-15		1.79	ND(0.0028)	0.0096	ND(0.0039)	ND(0.0039)	ND(0.0039)	0.0036	ND(0.0044)	ND(0.0044)	ND(0.0044)	0.044	0.033	ND(0.0036)	**ND(0.0020)**
1st Floor	Indoor Air	TO-15		1.75	ND(0.0028)	0.0057	ND(0.0038)	ND(0.0038)	ND(0.0038)	ND(0.0031)	ND(0.0043)	ND(0.0043)	ND(0.0043)	**0.13**	0.020	ND(0.0035)	ND(0.0019)
SS4	Sub-Slab	TO-15	9/13/2005	--	**17**	ND(6.3)	ND(7.3)	ND(7.3)	**ND(7.3)**	**120**	ND(8.2)	ND(8.2)	**ND(8.2)**	**1200**	**1500**	**36**	**ND(3.7)**
Basement	Indoor Air	TO-15		2.03	ND(0.0032)	0.025	ND(0.0044)	ND(0.0044)	ND(0.0044)	0.0037	ND(0.0050)	ND(0.0050)	ND(0.0050)	**0.78**	0.023	ND(0.0041)	**ND(0.0022)**
1st Floor	Indoor Air	TO-15		6.2	ND(0.0099)	0.022	ND(0.013)	ND(0.013)	ND(0.013)	ND(0.011)	ND(0.015)	ND(0.015)	**ND(0.015)**	**1.6**	ND(0.036)	ND(0.012)	**ND(0.0068)**
SS4	Sub-Slab	TO-15	12/5/2005	--	**0.084**	ND(0.081)	ND(0.093)	ND(0.093)	ND(0.093)	1.0	ND(0.53)	ND(0.53)	**ND(0.53)**	**34**	**66**	1.0	**ND(0.24)**
SS5	Sub-Slab	TO-15		1.87	0.0033	0.015	ND(0.0041)	ND(0.0041)	ND(0.0041)	0.014	ND(0.0046)	ND(0.0046)	ND(0.0046)	0.20	0.17	0.0048	ND(0.0021)
Basement	Indoor Air	TO-15		1.64	0.0031	0.015	ND(0.0036)	ND(0.0036)	ND(0.0036)	0.014	ND(0.0040)	ND(0.0040)	ND(0.0040)	**0.21**	**0.17**	0.0056	ND(0.0018)
1st Floor	Indoor Air	TO-15		1.68	0.0034	0.022	ND(0.0036)	ND(0.0036)	ND(0.0036)	0.011	ND(0.0041)	ND(0.0041)	ND(0.0041)	**0.19**	0.11	0.0038	ND(0.0018)
SS2	Sub-Slab	TO-15	3/15/2006	1.68	ND(0.0027)	0.0083	ND(0.0036)	ND(0.0036)	ND(0.0036)	ND(0.0030)	ND(0.0041)	ND(0.0041)	ND(0.0041)	0.034	0.020	ND(0.0034)	ND(0.0018)
SS3	Sub-Slab	TO-15		1.58	**0.064**	0.0065	ND(0.0034)	ND(0.0034)	ND(0.0034)	0.16	ND(0.0039)	0.0056	0.0075	0.15	0.35	0.46	ND(0.0017)
SS4	Sub-Slab	TO-15		--	0.019	ND(0.014)	ND(0.016)	ND(0.016)	ND(0.016)	0.17	ND(0.018)	ND(0.018)	ND(0.018)	**10**	**8.4**	0.025	ND(0.0081)
SS6	Sub-Slab	TO-15		1.68	ND(0.0027)	0.0076	ND(0.0036)	ND(0.0036)	ND(0.0036)	ND(0.0030)	ND(0.0041)	ND(0.0041)	ND(0.0041)	0.025	0.0099	ND(0.0034)	ND(0.0018)
SS7	Sub-Slab	TO-15		2.17	ND(0.0035)	0.0084	ND(0.0047)	ND(0.0047)	ND(0.0047)	ND(0.0038)	ND(0.0053)	ND(0.0053)	ND(0.0053)	0.042	0.013	ND(0.0044)	ND(0.0024)
Basement	Indoor Air	TO-15		1.68	ND(0.0027)	0.0089	ND(0.0036)	ND(0.0036)	ND(0.0036)	ND(0.0030)	ND(0.0041)	ND(0.0041)	ND(0.0041)	0.039	0.013	ND(0.0034)	ND(0.0018)
Basement - Dup	Indoor Air	TO-15		1.55	ND(0.0025)	0.0080	ND(0.0034)	ND(0.0034)	ND(0.0034)	ND(0.0027)	ND(0.0038)	ND(0.0038)	ND(0.0038)	0.041	0.014	ND(0.0031)	ND(0.0017)
1st Floor	Indoor Air	TO-15		1.58	ND(0.0025)	0.0055	ND(0.0034)	ND(0.0034)	ND(0.0034)	ND(0.0028)	ND(0.0039)	ND(0.0039)	ND(0.0039)	**0.15**	0.012	ND(0.0032)	ND(0.0017)
SS2	Sub-Slab	TO-15	6/22/2006	1.58	ND(0.0025)	0.014	ND(0.0034)	ND(0.0034)	ND(0.0034)	ND(0.0028)	ND(0.0039)	ND(0.0039)	ND(0.0039)	0.026	0.014	ND(0.0032)	ND(0.0017)
SS3	Sub-Slab	TO-15		1.58	ND(0.0025)	0.017	0.0042	ND(0.0034)	0.0059	ND(0.0028)	ND(0.0039)	ND(0.0039)	ND(0.0039)	0.0081	ND(0.0093)	ND(0.0032)	ND(0.0017)
SS4	Sub-Slab	TO-15		1.61	ND(0.0026)	0.016	0.0041	ND(0.0035)	0.0058	0.0030	ND(0.0040)	ND(0.0040)	ND(0.0040)	0.35	0.27	ND(0.0032)	ND(0.0018)
SS5	Sub-Slab	TO-15		1.61	ND(0.0026)	0.017	0.0038	ND(0.0035)	0.0056	ND(0.0028)	ND(0.0040)	ND(0.0040)	ND(0.0040)	ND(0.0076)	ND(0.0095)	ND(0.0032)	ND(0.0018)
SS6	Sub-Slab	TO-15		1.75	ND(0.0028)	0.012	ND(0.0038)	ND(0.0038)	ND(0.0038)	ND(0.0031)	ND(0.0043)	ND(0.0043)	ND(0.0043)	ND(0.0083)	ND(0.010)	ND(0.0035)	ND(0.0019)
SS7	Sub-Slab	TO-15		1.71	ND(0.0027)	0.018	ND(0.0037)	ND(0.0037)	ND(0.0037)	ND(0.0030)	ND(0.0042)	ND(0.0042)	ND(0.0042)	0.026	0.012	ND(0.0034)	ND(0.0019)
Basement	Indoor Air	TO-15		1.58	ND(0.0025)	0.022	0.0043	ND(0.0034)	0.0060	0.0040	ND(0.0039)	ND(0.0039)	ND(0.0039)	0.036	0.019	ND(0.0032)	ND(0.0017)
1st Floor	Indoor Air	TO-15		1.58	ND(0.0025)	0.016	0.0034	ND(0.0034)	0.0051	0.0034	ND(0.0039)	ND(0.0039)	ND(0.0039)	0.030	0.016	ND(0.0032)	ND(0.0017)

TABLE A-4. SUMMARY OF SUB-SLAB SOIL VAPOR AND INDOOR AIR ANALYTICAL RESULTS, 507 NORTH OLIVE STREET
HARTORD PETROLEUM HYDROCARBON RELEAESE SITE
HARTFORD, ILLINOIS

Location ID	Sample Type	Method	Date	Dilution Factor	Benzene mg/m^3	Tolune mg/m^3	m,p-Xylene mg/m^3	o-Xylene mg/m^3	Total Xylene[1] mg/m^3	Hexane mg/m^3	1,2,4-Trimethyl-benzene mg/m^3	1,3,5-Trimethyl-benzene mg/m^3	Total Trimethyl-benzene[2] mg/m^3	Butane mg/m^3	Isopentane mg/m^3	Methyl cyclohexane mg/m^3	1,3- Butadiene mg/m^3
SS1	Sub-Slab	TO-15	9/25/2006	1.49	0.0057	0.022	0.0088	ND(0.0032)	0.010	0.011	ND(0.0037)	ND(0.0037)	ND(0.0037)	0.18	0.11	ND(0.0030)	ND(0.0016)
SS2	Sub-Slab	TO-15		1.71	0.0069	0.021	0.0070	ND(0.0037)	0.0088	0.011	ND(0.0042)	ND(0.0042)	ND(0.0042)	0.19	0.12	ND(0.0034)	ND(0.0019)
SS3	Sub-Slab	TO-15		1.44	0.0045	0.017	0.0073	ND(0.0031)	0.0088	0.0047	ND(0.0035)	ND(0.0035)	ND(0.0035)	0.035	0.023	ND(0.0029)	ND(0.0016)
SS4	Sub-Slab	TO-15		--	0.0096	0.020	0.0076	ND(0.0033)	0.0092	0.046	ND(0.0037)	ND(0.0037)	ND(0.0037)	**1.5**	**1.3**	0.0089	ND(0.0017)
SS5	Sub-Slab	TO-15		1.58	0.0048	0.020	0.0075	ND(0.0034)	0.0092	0.0059	ND(0.0039)	ND(0.0039)	ND(0.0039)	0.039	0.029	ND(0.0032)	ND(0.0017)
SS6	Sub-Slab	TO-15		1.55	0.0050	0.020	0.0074	ND(0.0034)	0.0091	0.0051	ND(0.0038)	ND(0.0038)	ND(0.0038)	0.035	0.024	ND(0.0031)	ND(0.0017)
SS7	Sub-Slab	TO-15		1.61	0.0071	0.021	0.0076	ND(0.0035)	0.0094	0.011	ND(0.0040)	ND(0.0040)	ND(0.0040)	0.18	0.12	ND(0.0032)	ND(0.0018)
Basement	Indoor Air	TO-15		1.52	0.0068	0.023	0.0089	ND(0.0033)	0.011	0.012	ND(0.0037)	ND(0.0037)	ND(0.0037)	**0.21**	**0.13**	ND(0.0030)	ND(0.0017)
Basement - Dup	Indoor Air	TO-15		1.58	0.0062	0.023	0.0085	ND(0.0034)	0.010	0.012	ND(0.0039)	ND(0.0039)	ND(0.0039)	**0.20**	**0.13**	ND(0.0032)	ND(0.0017)
1st Floor	Indoor Air	TO-15		1.58	0.0066	0.023	0.0074	ND(0.0034)	0.0091	0.012	ND(0.0039)	ND(0.0039)	ND(0.0039)	**0.49**	**0.13**	ND(0.0032)	ND(0.0017)
SS1	Sub-Slab	TO-15	1/3/2007	2.36	ND(0.0038)	0.0087	ND(0.0051)	ND(0.0051)	ND(0.0051)	ND(0.0042)	ND(0.0058)	ND(0.0058)	ND(0.0058)	0.058	0.016	ND(0.0047)	ND(0.0026)
SS6	Sub-Slab	TO-15		--	**0.087**	ND(0.017)	ND(0.019)	ND(0.019)	ND(0.019)	**5.4**	ND(0.022)	ND(0.022)	ND(0.022)	**7.8**	**20**	6.0	ND(0.0098)
SS7	Sub-Slab	TO-15		1.41	ND(0.0022)	0.0080	0.0038	ND(0.0031)	0.0053	ND(0.0025)	ND(0.0035)	ND(0.0035)	ND(0.0035)	0.053	0.015	ND(0.0028)	ND(0.0016)
Basement	Indoor Air	TO-15		1.55	ND(0.0025)	0.0077	ND(0.0034)	ND(0.0034)	ND(0.0034)	ND(0.0027)	ND(0.0038)	ND(0.0038)	ND(0.0038)	0.070	0.015	ND(0.0031)	ND(0.0017)
SS1	Sub-Slab	TO-15	4/2/2007	2.17	ND(0.0035)	0.014	ND(0.0047)	ND(0.0047)	ND(0.0047)	0.019	ND(0.0053)	ND(0.0053)	ND(0.0053)	0.56	0.34	0.0061	ND(0.0024)
SS2	Sub-Slab	TO-15		--	ND(0.0027)	0.014	ND(0.0037)	ND(0.0037)	ND(0.0037)	0.030	ND(0.0042)	ND(0.0042)	ND(0.0042)	0.99	0.67	0.0054	ND(0.0020)
SS3	Sub-Slab	TO-15		185000	**ND(300)**	**ND(350)**	ND(400)	ND(400)	**ND(400)**	**1200**	ND(450)	ND(450)	**ND(450)**	**54000**	**33000**	**ND(370)**	**ND(200)**
SS4	Sub-Slab	TO-15		13400	**ND(21)**	**ND(25)**	ND(29)	ND(29)	**ND(29)**	**93**	ND(33)	ND(33)	**ND(33)**	**5300**	**3800**	**ND(27)**	**ND(15)**
SS5	Sub-Slab	TO-15		1.58	ND(0.0025)	0.013	ND(0.0034)	ND(0.0034)	ND(0.0034)	0.015	ND(0.0039)	ND(0.0039)	ND(0.0039)	0.12	0.10	0.0048	ND(0.0017)
SS6	Sub-Slab	TO-15		168000	**ND(270)**	**ND(320)**	ND(360)	ND(360)	**ND(360)**	**590**	ND(410)	ND(410)	**ND(410)**	**36000**	**21000**	**ND(340)**	**ND(180)**
SS7	Sub-Slab	TO-15		79000	**ND(130)**	**ND(150)**	ND(170)	ND(170)	**ND(170)**	**380**	ND(190)	ND(190)	**ND(190)**	**20000**	**13000**	**ND(160)**	**ND(87)**
Basement	Indoor Air	TO-15		--	ND(0.0029)	0.012	ND(0.0040)	ND(0.0040)	ND(0.0040)	0.029	ND(0.0045)	ND(0.0045)	ND(0.0045)	**0.88**	**0.52**	0.0073	**ND(0.0020)**
Basement - Dup	Indoor Air	TO-15		--	ND(0.0027)	0.012	ND(0.0036)	ND(0.0036)	ND(0.0036)	0.027	ND(0.0041)	ND(0.0041)	ND(0.0041)	**0.92**	**0.52**	0.0070	ND(0.0018)
1st Floor	Indoor Air	TO-15		1.61	ND(0.0026)	0.013	ND(0.0035)	ND(0.0035)	ND(0.0035)	0.0043	ND(0.0040)	ND(0.0040)	ND(0.0040)	0.087	0.051	ND(0.0032)	ND(0.0018)
SS1	Sub-Slab	TO-15	7/19/2007	1.75	ND(0.0028)	0.014	ND(0.0038)	ND(0.0038)	ND(0.0038)	ND(0.0031)	ND(0.0043)	ND(0.0043)	ND(0.0043)	0.031	0.019	ND(0.0035)	ND(0.0019)
SS2	Sub-Slab	TO-15		1.58	ND(0.0025)	0.012	ND(0.0034)	ND(0.0034)	ND(0.0034)	ND(0.0028)	ND(0.0039)	ND(0.0039)	ND(0.0039)	0.028	0.016	ND(0.0032)	ND(0.0017)
SS3	Sub-Slab	TO-15		1.58	**0.087**	0.010	0.0076	ND(0.0034)	0.0093	ND(0.0028)	ND(0.0039)	ND(0.0039)	ND(0.0039)	ND(0.0075)	ND(0.0093)	ND(0.0032)	ND(0.0017)
SS4	Sub-Slab	TO-15		1.52	ND(0.0024)	0.011	ND(0.0033)	ND(0.0033)	ND(0.0033)	ND(0.0027)	ND(0.0037)	ND(0.0037)	ND(0.0037)	0.016	0.0091	ND(0.0030)	ND(0.0017)
SS5	Sub-Slab	TO-15		1.46	ND(0.0023)	0.011	ND(0.0032)	ND(0.0032)	ND(0.0032)	ND(0.0026)	ND(0.0036)	ND(0.0036)	ND(0.0036)	ND(0.0069)	ND(0.0086)	ND(0.0029)	ND(0.0016)
SS6	Sub-Slab	TO-15		1.58	ND(0.0025)	0.0095	ND(0.0034)	ND(0.0034)	ND(0.0034)	ND(0.0028)	ND(0.0039)	ND(0.0039)	ND(0.0039)	ND(0.0075)	ND(0.0093)	ND(0.0032)	ND(0.0017)
SS7	Sub-Slab	TO-15		1.61	ND(0.0026)	0.012	ND(0.0035)	ND(0.0035)	ND(0.0035)	ND(0.0028)	ND(0.0040)	ND(0.0040)	ND(0.0040)	0.024	0.013	ND(0.0032)	ND(0.0018)
Basement	Indoor Air	TO-15		1.55	ND(0.0025)	0.013	ND(0.0034)	ND(0.0034)	ND(0.0034)	ND(0.0027)	ND(0.0038)	ND(0.0038)	ND(0.0038)	0.040	0.018	ND(0.0031)	ND(0.0017)
1st Floor	Indoor Air	TO-15		1.64	ND(0.0026)	0.0091	ND(0.0036)	ND(0.0036)	ND(0.0036)	ND(0.0029)	ND(0.0040)	ND(0.0040)	ND(0.0040)	**0.13**	0.028	ND(0.0033)	ND(0.0018)
1st Floor - Dup	Indoor Air	TO-15		1.71	0.0039	0.013	ND(0.0037)	ND(0.0037)	ND(0.0037)	ND(0.0030)	ND(0.0042)	ND(0.0042)	ND(0.0042)	**0.14**	0.098	ND(0.0034)	ND(0.0019)
SS1	Sub-Slab	TO-15	10/11/2007	6.7	ND(0.011)	0.015	ND(0.014)	ND(0.014)	ND(0.014)	ND(0.012)	ND(0.016)	ND(0.016)	ND(0.016)	ND(0.032)	ND(0.040)	ND(0.013)	ND(0.0074)
SS2	Sub-Slab	TO-15		1.71	ND(0.0027)	0.010	ND(0.0037)	ND(0.0037)	ND(0.0037)	ND(0.0030)	ND(0.0042)	ND(0.0042)	ND(0.0042)	0.013	ND(0.010)	ND(0.0034)	ND(0.0019)
SS3	Sub-Slab	TO-15		1.58	ND(0.0025)	0.011	ND(0.0034)	ND(0.0034)	ND(0.0034)	ND(0.0028)	ND(0.0039)	ND(0.0039)	ND(0.0039)	ND(0.0075)	ND(0.0093)	ND(0.0032)	ND(0.0017)
SS4	Sub-Slab	TO-15		1.52	ND(0.0024)	0.010	ND(0.0033)	ND(0.0033)	ND(0.0033)	ND(0.0027)	ND(0.0037)	ND(0.0037)	ND(0.0037)	ND(0.0072)	ND(0.009)	ND(0.0030)	ND(0.0017)

TABLE A-4. SUMMARY OF SUB-SLAB SOIL VAPOR AND INDOOR AIR ANALYTICAL RESULTS, 507 NORTH OLIVE STREET
HARTORD PETROLEUM HYDROCARBON RELEAESE SITE
HARTFORD, ILLINOIS

Location ID	Sample Type	Method	Date	Dilution Factor	Benzene mg/m^3	Tolune mg/m^3	m,p-Xylene mg/m^3	o-Xylene mg/m^3	Total Xylene[1] mg/m^3	Hexane mg/m^3	1,2,4-Trimethyl-benzene mg/m^3	1,3,5-Trimethyl-benzene mg/m^3	Total Trimethyl-benzene[2] mg/m^3	Butane mg/m^3	Isopentane mg/m^3	Methyl cyclohexane mg/m^3	1,3- Butadiene mg/m^3
SS5	Sub-Slab	TO-15	10/11/2007	1.36	ND(0.0022)	0.0093	ND(0.0030)	ND(0.0030)	ND(0.0030)	ND(0.0024)	ND(0.0033)	ND(0.0033)	ND(0.0033)	ND(0.0065)	ND(0.0080)	ND(0.0027)	ND(0.0015)
SS6	Sub-Slab	TO-15		1.55	ND(0.0025)	0.010	ND(0.0034)	ND(0.0034)	ND(0.0034)	ND(0.0027)	ND(0.0038)	ND(0.0038)	ND(0.0038)	ND(0.0074)	ND(0.0091)	ND(0.0031)	ND(0.0017)
SS7	Sub-Slab	TO-15		1.55	ND(0.0025)	0.011	ND(0.0034)	ND(0.0034)	ND(0.0034)	ND(0.0027)	ND(0.0038)	ND(0.0038)	ND(0.0038)	0.011	0.010	ND(0.0031)	ND(0.0017)
Basement	Indoor Air	TO-15		1.58	ND(0.0025)	0.012	0.0035	ND(0.0034)	0.0052	ND(0.0028)	ND(0.0039)	ND(0.0039)	ND(0.0039)	0.013	0.011	ND(0.0032)	ND(0.0017)
Basement - Dup	Indoor Air	TO-15		1.61	ND(0.0026)	0.012	0.0035	ND(0.0035)	0.0052	ND(0.0028)	ND(0.0040)	ND(0.0040)	ND(0.0040)	0.015	0.012	ND(0.0032)	ND(0.0018)
1st Floor	Indoor Air	TO-15		1.71	ND(0.0027)	0.020	ND(0.0037)	ND(0.0037)	ND(0.0037)	ND(0.0030)	ND(0.0042)	ND(0.0042)	ND(0.0042)	0.036	0.029	ND(0.0034)	ND(0.0019)
SS1	Sub-Slab	TO-15	1/21/2008	1.39	ND(0.0022)	0.0054	ND(0.0030)	ND(0.0030)	ND(0.0030)	ND(0.0024)	ND(0.0034)	ND(0.0034)	ND(0.0034)	0.014	ND(0.0082)	ND(0.0028)	ND(0.0015)
SS2	Sub-Slab	TO-15		1.44	ND(0.0023)	0.0059	ND(0.0031)	ND(0.0031)	ND(0.0031)	ND(0.0025)	ND(0.0035)	ND(0.0035)	ND(0.0035)	0.0096	ND(0.0085)	ND(0.0029)	ND(0.0016)
SS4	Sub-Slab	TO-15		1.64	ND(0.0026)	0.0070	ND(0.0036)	ND(0.0036)	ND(0.0036)	ND(0.0029)	ND(0.0040)	ND(0.0040)	ND(0.0040)	ND(0.0078)	ND(0.0097)	ND(0.0033)	ND(0.0018)
SS5	Sub-Slab	TO-15		1.71	ND(0.0027)	0.0074	ND(0.0037)	ND(0.0037)	ND(0.0037)	ND(0.0030)	ND(0.0042)	ND(0.0042)	ND(0.0042)	ND(0.0081)	ND(0.010)	ND(0.0034)	ND(0.0019)
SS6	Sub-Slab	TO-15		1.68	ND(0.0027)	0.0052	ND(0.0036)	ND(0.0036)	ND(0.0036)	ND(0.0030)	ND(0.0041)	ND(0.0041)	ND(0.0041)	ND(0.0080)	ND(0.0099)	ND(0.0034)	ND(0.0018)
SS7	Sub-Slab	TO-15		1.91	ND(0.0030)	0.0056	ND(0.0041)	ND(0.0041)	ND(0.0041)	ND(0.0034)	ND(0.0047)	ND(0.0047)	ND(0.0047)	ND(0.0091)	ND(0.011)	ND(0.0038)	ND(0.0021)
Basement	Indoor Air	TO-15		1.49	ND(0.0024)	0.010	ND(0.0032)	ND(0.0032)	ND(0.0032)	ND(0.0026)	ND(0.0037)	ND(0.0037)	ND(0.0037)	0.011	ND(0.0088)	ND(0.0030)	ND(0.0016)
1st Floor	Indoor Air	TO-15		1.83	ND(0.0029)	0.0041	ND(0.0040)	ND(0.0040)	ND(0.0040)	ND(0.0032)	ND(0.0045)	ND(0.0045)	ND(0.0045)	0.0099	ND(0.011)	ND(0.0037)	**ND(0.0020)**
SS1	Sub-Slab	TO-15	4/21/2008	1.61	ND(0.0026)	0.0093	ND(0.0035)	ND(0.0035)	ND(0.0035)	ND(0.0028)	ND(0.0024)	ND(0.0024)	ND(0.0024)	0.023	0.016	ND(0.0032)	ND(0.0011)
SS2	Sub-Slab	TO-15		1.71	ND(0.0027)	0.0093	ND(0.0037)	ND(0.0037)	ND(0.0037)	ND(0.0030)	ND(0.0025)	ND(0.0025)	ND(0.0025)	0.021	0.015	ND(0.0034)	ND(0.0011)
SS3	Sub-Slab	TO-15		1.44	ND(0.0023)	0.0088	ND(0.0031)	ND(0.0031)	ND(0.0031)	ND(0.0025)	ND(0.0021)	ND(0.0021)	ND(0.0021)	ND(0.0068)	ND(0.0085)	ND(0.0029)	ND(0.00096)
SS4	Sub-Slab	TO-15		1.61	ND(0.0026)	0.010	ND(0.0035)	ND(0.0035)	ND(0.0035)	ND(0.0028)	ND(0.0024)	ND(0.0024)	ND(0.0024)	0.020	0.017	ND(0.0032)	ND(0.0011)
SS5	Sub-Slab	TO-15		1.79	ND(0.0028)	0.0093	ND(0.0039)	ND(0.0039)	ND(0.0039)	ND(0.0032)	ND(0.0026)	ND(0.0026)	ND(0.0026)	ND(0.0085)	ND(0.010)	ND(0.0036)	ND(0.0012)
SS6	Sub-Slab	TO-15		1.83	ND(0.0029)	0.0087	ND(0.0040)	ND(0.0040)	ND(0.0040)	ND(0.0032)	ND(0.0027)	ND(0.0027)	ND(0.0027)	ND(0.0087)	ND(0.011)	ND(0.0037)	ND(0.0012)
SS7	Sub-Slab	TO-15		2.12	ND(0.0034)	0.0092	ND(0.0046)	ND(0.0046)	ND(0.0046)	ND(0.0037)	ND(0.0031)	ND(0.0031)	ND(0.0031)	0.022	0.016	ND(0.0042)	ND(0.0014)
Basement	Indoor Air	TO-15		1.91	ND(0.0030)	0.0096	ND(0.0041)	ND(0.0041)	ND(0.0041)	ND(0.0034)	ND(0.0028)	ND(0.0028)	ND(0.0028)	0.023	0.016	ND(0.0038)	ND(0.0013)
1st Floor	Indoor Air	TO-15		1.96	ND(0.0031)	0.0061	ND(0.0042)	ND(0.0042)	ND(0.0042)	ND(0.0034)	ND(0.0029)	ND(0.0029)	ND(0.0029)	0.032	0.015	ND(0.0039)	ND(0.0013)
SS1	Sub-Slab	TO-15	7/29/2008	1.87	ND(0.0030)	0.014	ND(0.0041)	ND(0.0041)	ND(0.0041)	ND(0.0033)	ND(0.0028)	ND(0.0028)	ND(0.0028)	0.088	0.018	ND(0.0038)	ND(0.0012)
SS2	Sub-Slab	TO-15		1.71	ND(0.0027)	0.014	ND(0.0037)	ND(0.0037)	ND(0.0037)	ND(0.0030)	ND(0.0025)	ND(0.0025)	ND(0.0025)	0.085	0.019	ND(0.0034)	ND(0.0011)
SS3	Sub-Slab	TO-15		2.36	ND(0.0038)	0.021	ND(0.0051)	ND(0.0051)	ND(0.0051)	ND(0.0042)	ND(0.0035)	ND(0.0035)	ND(0.0035)	0.074	0.038	ND(0.0047)	ND(0.0016)
SS4	Sub-Slab	TO-15		1.55	ND(0.0025)	0.015	ND(0.0034)	ND(0.0034)	ND(0.0034)	ND(0.0027)	ND(0.0023)	ND(0.0023)	ND(0.0023)	0.061	0.025	ND(0.0031)	ND(0.0010)
SS5	Sub-Slab	TO-15		2.87	ND(0.0046)	0.016	ND(0.0062)	ND(0.0062)	ND(0.0062)	ND(0.0050)	ND(0.0042)	ND(0.0042)	ND(0.0042)	0.018	ND(0.017)	ND(0.0058)	ND(0.0019)
SS6	Sub-Slab	TO-15		1.79	ND(0.0028)	0.013	ND(0.0039)	ND(0.0039)	ND(0.0039)	ND(0.0032)	ND(0.0026)	ND(0.0026)	ND(0.0026)	0.015	ND(0.010)	ND(0.0036)	ND(0.0012)
SS7	Sub-Slab	TO-15		1.79	ND(0.0028)	0.020	ND(0.0039)	ND(0.0039)	ND(0.0039)	ND(0.0032)	ND(0.0026)	ND(0.0026)	ND(0.0026)	0.082	0.028	ND(0.0036)	ND(0.0012)
Basement	Indoor Air	TO-15		2.01	ND(0.0032)	0.015	ND(0.0044)	ND(0.0044)	ND(0.0044)	ND(0.0035)	ND(0.0030)	ND(0.0030)	ND(0.0030)	0.080	0.019	ND(0.0040)	ND(0.0013)
1st Floor	Indoor Air	TO-15		1.83	ND(0.0029)	0.0093	ND(0.0040)	ND(0.0040)	ND(0.0040)	ND(0.0032)	ND(0.0027)	ND(0.0027)	ND(0.0027)	0.070	0.017	ND(0.0037)	ND(0.0012)
SS1	Sub-Slab	TO-15	10/23/2008	2.87	ND(0.0046)	0.075	0.0076	ND(0.0062)	0.011	ND(0.0050)	ND(0.0042)	ND(0.0042)	ND(0.0042)	0.017	0.028	ND(0.0058)	ND(0.0019)
SS2	Sub-Slab	TO-15		2.36	ND(0.0038)	0.016	ND(0.0051)	ND(0.0051)	ND(0.0051)	ND(0.0042)	ND(0.0035)	ND(0.0035)	ND(0.0035)	0.018	ND(0.014)	ND(0.0047)	ND(0.0016)
SS3	Sub-Slab	TO-15		1.79	ND(0.0028)	0.015	ND(0.0039)	ND(0.0039)	ND(0.0039)	ND(0.0032)	ND(0.0026)	ND(0.0026)	ND(0.0026)	0.011	ND(0.010)	ND(0.0036)	ND(0.0012)
SS4	Sub-Slab	TO-15		1.83	ND(0.0029)	0.015	ND(0.0040)	ND(0.0040)	ND(0.0040)	ND(0.0032)	ND(0.0027)	ND(0.0027)	ND(0.0027)	ND(0.0087)	ND(0.011)	ND(0.0037)	ND(0.0012)
SS5	Sub-Slab	TO-15		1.87	ND(0.0030)	0.016	ND(0.0041)	ND(0.0041)	ND(0.0041)	ND(0.0033)	ND(0.0028)	ND(0.0028)	ND(0.0028)	ND(0.0089)	ND(0.011)	ND(0.0038)	ND(0.0012)
SS6	Sub-Slab	TO-15		1.96	ND(0.0031)	0.016	ND(0.0042)	ND(0.0042)	ND(0.0042)	ND(0.0034)	ND(0.0029)	ND(0.0029)	ND(0.0029)	0.020	0.013	ND(0.0039)	ND(0.0013)

TABLE A-4. SUMMARY OF SUB-SLAB SOIL VAPOR AND INDOOR AIR ANALYTICAL RESULTS, 507 NORTH OLIVE STREET
HARTORD PETROLEUM HYDROCARBON RELEAESE SITE
HARTFORD, ILLINOIS

Location ID	Sample Type	Method	Date	Dilution Factor	Benzene mg/m^3	Tolune mg/m^3	m,p-Xylene mg/m^3	o-Xylene mg/m^3	Total Xylene[1] mg/m^3	Hexane mg/m^3	1,2,4-Trimethyl-benzene mg/m^3	1,3,5-Trimethyl-benzene mg/m^3	Total Trimethyl-benzene[2] mg/m^3	Butane mg/m^3	Isopentane mg/m^3	Methyl cyclohexane mg/m^3	1,3- Butadiene mg/m^3
SS7	Sub-Slab	TO-15	10/23/2008	2.44	ND(0.0039)	0.016	ND(0.0053)	ND(0.0053)	ND(0.0053)	ND(0.0043)	ND(0.0036)	ND(0.0036)	ND(0.0036)	0.015	ND(0.014)	ND(0.0049)	ND(0.0016)
Basement	Indoor Air	TO-15		2.17	ND(0.0035)	0.016	ND(0.0047)	ND(0.0047)	ND(0.0047)	ND(0.0038)	ND(0.0032)	ND(0.0032)	ND(0.0032)	0.021	0.013	ND(0.0044)	ND(0.0014)
Basement - Dup	Indoor Air	TO-15		1.87	ND(0.0030)	0.017	ND(0.0041)	ND(0.0041)	ND(0.0041)	ND(0.0033)	ND(0.0028)	ND(0.0028)	ND(0.0028)	0.018	0.013	ND(0.0038)	ND(0.0012)
1st Floor	Indoor Air	TO-15		1.91	ND(0.0030)	0.023	ND(0.0041)	ND(0.0041)	ND(0.0041)	ND(0.0034)	ND(0.0028)	ND(0.0028)	ND(0.0028)	0.027	0.015	ND(0.0038)	ND(0.0013)
SS1	Sub-Slab	TO-15	1/26/2009	1.87	ND(0.0030)	0.0065	ND(0.0041)	ND(0.0041)	ND(0.0041)	ND(0.0033)	ND(0.0028)	ND(0.0028)	ND(0.0028)	0.019	ND(0.011)	ND(0.0038)	ND(0.0012)
SS2	Sub-Slab	TO-15		1.75	ND(0.0028)	0.0060	ND(0.0038)	ND(0.0038)	ND(0.0038)	ND(0.0031)	ND(0.0026)	ND(0.0026)	ND(0.0026)	0.016	ND(0.010)	ND(0.0035)	ND(0.0012)
SS3	Sub-Slab	TO-15		1.91	ND(0.0030)	0.0051	ND(0.0041)	ND(0.0041)	ND(0.0041)	ND(0.0034)	ND(0.0028)	ND(0.0028)	ND(0.0028)	ND(0.0091)	ND(0.011)	ND(0.0038)	ND(0.0013)
SS4	Sub-Slab	TO-15		1.75	ND(0.0028)	0.0057	ND(0.0038)	ND(0.0038)	ND(0.0038)	ND(0.0031)	ND(0.0026)	ND(0.0026)	ND(0.0026)	ND(0.0083)	ND(0.010)	ND(0.0035)	ND(0.0012)
SS5	Sub-Slab	TO-15		1.91	ND(0.0030)	0.0074	ND(0.0041)	ND(0.0041)	ND(0.0041)	ND(0.0034)	ND(0.0028)	ND(0.0028)	ND(0.0028)	ND(0.0091)	ND(0.011)	ND(0.0038)	ND(0.0013)
SS6	Sub-Slab	TO-15		1.79	ND(0.0028)	0.0053	ND(0.0039)	ND(0.0039)	ND(0.0039)	ND(0.0032)	ND(0.0026)	ND(0.0026)	ND(0.0026)	ND(0.0085)	ND(0.010)	ND(0.0036)	ND(0.0012)
SS7	Sub-Slab	TO-15		2.01	ND(0.0032)	0.0062	ND(0.0044)	ND(0.0044)	ND(0.0044)	ND(0.0035)	ND(0.0030)	ND(0.0030)	ND(0.0030)	0.015	ND(0.012)	ND(0.0040)	ND(0.0013)
Basement	Indoor Air	TO-15		2.12	ND(0.0034)	0.0069	ND(0.0046)	ND(0.0046)	ND(0.0046)	ND(0.0037)	ND(0.0031)	ND(0.0031)	ND(0.0031)	0.018	ND(0.012)	ND(0.0042)	ND(0.0014)
Basement - Dup	Indoor Air	TO-15		2.01	ND(0.0032)	0.0069	ND(0.0044)	ND(0.0044)	ND(0.0044)	ND(0.0035)	ND(0.0030)	ND(0.0030)	ND(0.0030)	0.015	ND(0.012)	ND(0.0040)	ND(0.0013)
1st Floor	Indoor Air	TO-15		1.79	ND(0.0028)	0.0050	ND(0.0039)	ND(0.0039)	ND(0.0039)	ND(0.0032)	ND(0.0026)	ND(0.0026)	ND(0.0026)	0.022	ND(0.010)	ND(0.0036)	ND(0.0012)
SS4	Sub-Slab	TO-15	6/23/2009	1.68	ND(0.0027)	0.019	ND(0.0036)	ND(0.0036)	ND(0.0036)	ND(0.0030)	ND(0.0025)	ND(0.0025)	ND(0.0025)	ND(0.0080)	ND(0.0099)	ND(0.0034)	--
SS4 - Dup	Sub-Slab	TO-15		1.68	ND(0.0027)	0.018	ND(0.0036)	ND(0.0036)	ND(0.0036)	ND(0.0030)	ND(0.0025)	ND(0.0025)	ND(0.0025)	ND(0.0080)	ND(0.0099)	ND(0.0034)	--
SS6	Sub-Slab	TO-15		2.23	ND(0.0036)	0.018	ND(0.0048)	ND(0.0048)	ND(0.0048)	ND(0.0039)	ND(0.0033)	ND(0.0033)	ND(0.0033)	ND(0.011)	ND(0.013)	ND(0.0045)	--
SS7	Sub-Slab	TO-15		1.71	ND(0.0027)	0.020	ND(0.0037)	ND(0.0037)	ND(0.0037)	ND(0.0030)	ND(0.0025)	ND(0.0025)	ND(0.0025)	0.020	0.016	ND(0.0034)	--
Basement	Indoor Air	TO-15		1.79	ND(0.0028)	0.020	ND(0.0039)	ND(0.0039)	ND(0.0039)	ND(0.0032)	ND(0.0026)	ND(0.0026)	ND(0.0026)	0.020	0.016	ND(0.0036)	--
1st Floor	Indoor Air	TO-15		2.01	ND(0.0032)	0.015	ND(0.0044)	ND(0.0044)	ND(0.0044)	ND(0.0035)	ND(0.0030)	ND(0.0030)	ND(0.0030)	0.018	0.016	ND(0.0040)	--
SS4	Sub-Slab	TO-15	10/1/2009	1.83	ND(0.0029)	0.021	ND(0.0040)	ND(0.0040)	ND(0.0040)	ND(0.0032)	ND(0.0027)	ND(0.0027)	ND(0.0027)	ND(0.0087)	ND(0.011)	ND(0.0037)	--
SS6	Sub-Slab	TO-15		1.61	ND(0.0026)	0.019	ND(0.0035)	ND(0.0035)	ND(0.0035)	ND(0.0028)	ND(0.0024)	ND(0.0024)	ND(0.0024)	ND(0.0076)	ND(0.0095)	ND(0.0032)	--
SS7	Sub-Slab	TO-15		2.17	ND(0.0035)	0.023	ND(0.0047)	ND(0.0047)	ND(0.0047)	ND(0.0038)	ND(0.0032)	ND(0.0032)	ND(0.0032)	0.013	ND(0.013)	ND(0.0044)	--
Basement	Indoor Air	TO-15		1.55	ND(0.0025)	0.024	0.0066	ND(0.0034)	0.0083	ND(0.0027)	ND(0.0023)	ND(0.0023)	ND(0.0023)	0.030	0.0096	ND(0.0031)	--
1st Floor	Indoor Air	TO-15		1.58	ND(0.0025)	0.011	ND(0.0034)	ND(0.0034)	ND(0.0034)	ND(0.0028)	ND(0.0023)	ND(0.0023)	ND(0.0023)	0.027	ND(0.0093)	ND(0.0032)	--
1st Floor - Dup	Indoor Air	TO-15		1.58	ND(0.0025)	0.011	ND(0.0034)	ND(0.0034)	ND(0.0034)	ND(0.0028)	ND(0.0023)	ND(0.0023)	ND(0.0023)	0.026	ND(0.0093)	ND(0.0032)	--
SS4	Sub-Slab	TO-15	1/28/2010	1.63	ND(0.0026)	0.0088	0.0035 J	ND(0.0035)	0.0053	ND(0.0029)	ND(0.0024)	ND(0.0024)	ND(0.0024)	ND(0.0077)	ND(0.0096)	ND(0.0033)	--
SS6	Sub-Slab	TO-15		1.44	ND(0.0023)	0.0087	0.0033	ND(0.0031)	0.0049	ND(0.0025)	ND(0.0021)	ND(0.0021)	ND(0.0021)	ND(0.0068)	ND(0.0085)	ND(0.0029)	--
SS7	Sub-Slab	TO-15		1.69	ND(0.0027)	0.0091	ND(0.0037)	ND(0.0037)	ND(0.0037)	ND(0.0030)	ND(0.0025)	ND(0.0025)	ND(0.0025)	0.021	ND(0.010)	ND(0.0034)	--
Basement	Indoor Air	TO-15		1.35	ND(0.0022)	0.0056	ND(0.0029)	ND(0.0029)	ND(0.0029)	ND(0.0024)	ND(0.0020)	ND(0.0020)	ND(0.0020)	0.019	0.0084	ND(0.0027)	--
1st Floor	Indoor Air	TO-15		1.53	ND(0.0024)	0.0042	ND(0.0033)	ND(0.0033)	ND(0.0033)	ND(0.0027)	ND(0.0022)	ND(0.0022)	ND(0.0022)	0.020	0.0090	ND(0.0031)	--
SS4	Sub-Slab	TO-15	5/18/2010	5.83	**ND(0.093)**	ND(0.11)	ND(0.13)	ND(0.13)	ND(0.13)	0.69	ND(0.14)	ND(0.14)	**ND(0.14)**	**20 J**	**40 J**	ND(0.12)	--
SS4 - Dup	Sub-Slab	TO-15		2.92	**ND(0.047)**	ND(0.055)	ND(0.063)	ND(0.063)	ND(0.063)	0.68	ND(0.072)	ND(0.072)	**ND(0.072)**	**19 J**	**39 J**	0.082	--
1st Floor	Indoor Air	TO-15		1.44	0.0042	0.018	0.0053	ND(0.0031)	0.0068	0.0046	ND(0.0021)	ND(0.0021)	ND(0.0021)	0.024	0.043	ND(0.0029)	--
1st Floor - Dup	Indoor Air	TO-15		1.44	0.0042	0.019	0.0046	ND(0.0031)	0.0062	0.0043	ND(0.0021)	ND(0.0021)	ND(0.0021)	0.023	0.040	ND(0.0029)	--
SS4	Sub-Slab	TO-15	9/9/2010	775	**ND(12)**	**ND(15)**	ND(17)	ND(17)	**ND(17)**	**520 J**	ND(19)	ND(19)	**ND(19)**	**5900 J**	**7000 J**	**44 J**	--
SS4 - Dup	Sub-Slab	TO-15		775	**ND(12)**	**ND(15)**	ND(17)	ND(17)	**ND(17)**	**530 J**	ND(19)	ND(19)	**ND(19)**	**5800 J**	**7000 J**	**42 J**	--

TABLE A-4. SUMMARY OF SUB-SLAB SOIL VAPOR AND INDOOR AIR ANALYTICAL RESULTS, 507 NORTH OLIVE STREET
HARTORD PETROLEUM HYDROCARBON RELEAESE SITE
HARTFORD, ILLINOIS

Location ID	Sample Type	Method	Date	Dilution Factor	Benzene mg/m^3	Tolune mg/m^3	m,p-Xylene mg/m^3	o-Xylene mg/m^3	Total Xylene[1] mg/m^3	Hexane mg/m^3	1,2,4-Trimethyl-benzene mg/m^3	1,3,5-Trimethyl-benzene mg/m^3	Total Trimethyl-benzene[2] mg/m^3	Butane mg/m^3	Isopentane mg/m^3	Methyl cyclohexane mg/m^3	1,3- Butadiene mg/m^3
Basement	Indoor Air	TO-15	9/9/2010	1.79	ND(0.0028)	0.017	0.0047	ND(0.0039)	0.0066	0.0052	0.013	0.0039	**0.017**	0.035	0.060	ND(0.0036)	--
Basement - Dup	Indoor Air	TO-15		1.79	ND(0.0028)	0.017	0.0042	ND(0.0039)	0.0062	0.0049	0.012	0.0038	**0.016**	0.036	0.060	ND(0.0036)	--
SS3	Sub-Slab	TO-15	9/14/2010	1.76	**0.038**	0.020	0.014	0.0054	0.019	0.048	0.015	0.0043	0.019	0.27	0.30	0.015	--
SS3 - Dup	Sub-Slab	TO-15		1.76	**0.037**	0.018	0.014	0.0054	0.019	0.049	0.014	0.0039	0.018	0.28	0.32	0.015	--
Basement	Indoor Air	TO-15		1.61	0.0034	0.011	0.0050	ND(0.0035)	0.0068	0.014	0.011	0.0038	**0.015**	0.082	**130 J**	ND(0.0032)	--
1st Floor	Indoor Air	TO-15		1.75	0.0036	0.0094	0.0038	ND(0.0038)	0.0057	0.013	0.0039	ND(0.0026)	0.0052	0.071	**120 J**	ND(0.0035)	--
SS4	Sub-Slab	TO-15	5/25/2011	22.4	**ND(0.36)**	ND(0.42)	ND(0.49)	ND(0.49)	ND(0.49)	**9.0 J**	ND(0.55)	ND(0.55)	**ND(0.55)**	**180 J**	**250 J**	ND(0.45)	--
SS4 - Dup	Sub-Slab	TO-15		9.94	**ND(0.16)**	ND(0.19)	ND(0.22)	ND(0.22)	ND(0.22)	**9.5 J**	ND(0.24)	ND(0.24)	**ND(0.24)**	**180 J**	**250 J**	0.34	--
Basement	Indoor Air	TO-15		1.75	ND(0.0028)	0.017	ND(0.0038)	ND(0.0038)	ND(0.0038)	ND(0.0031)	ND(0.0026)	ND(0.0026)	ND(0.0026)	0.095	ND(0.010)	ND(0.0035)	--
Basement	Indoor Air	TO-15	4/26/2012	1.75	ND(0.0028)	ND(0.0033)	ND(0.0038)	ND(0.0038)	ND(0.0038)	ND(0.0031)	ND(0.0026)	ND(0.0026)	ND(0.0026)	0.012	0.019	ND(0.0035)	--
Basement - Dup	Indoor Air	TO-15		1.75	ND(0.0028)	ND(0.0033)	ND(0.0038)	ND(0.0038)	ND(0.0038)	ND(0.0031)	ND(0.0026)	ND(0.0026)	ND(0.0026)	0.011	0.020	ND(0.0035)	--
Indoor Air Comparison Values					**0.029**	**0.30**	**--**	**--**	**0.217**	**0.20**	**--**	**--**	**0.0060**	**0.115**	**0.115**	**3.0**	**0.0020**
Sub-Slab Comparison Values					**0.29**	**3.0**	**--**	**--**	**2.17**	**2.0**	**--**	**--**	**0.060**	**1.15**	**1.15**	**30**	**0.020**

Notes:
- Sub-slab comparison values based on an attenuation factor of 0.1
- **BOLD** - Value is above the comparison value

[1] Total xylene is calculated by summing the m-, p-, and o- xylene isomers, using half the detection limit for non-detect results.
[2] Total trimethylbenzene is calculated by summing the 1, 2, 4- and 1, 3, 5- trimethylbenzene isomers, using half the detection limit for non-detect results.
mg/m^3 - Milligram per cubic meter
Dup - Blind duplicate sample
ND - Not detected
J - Estimated concentration

APPENDIX B

EQUIPMENT SPECIFICATIONS

REV.NO.	DESCRIPTION	PREVIOUS DWG	BY	DATE

ITEM	QTY.	REF.	DESCRIPTION

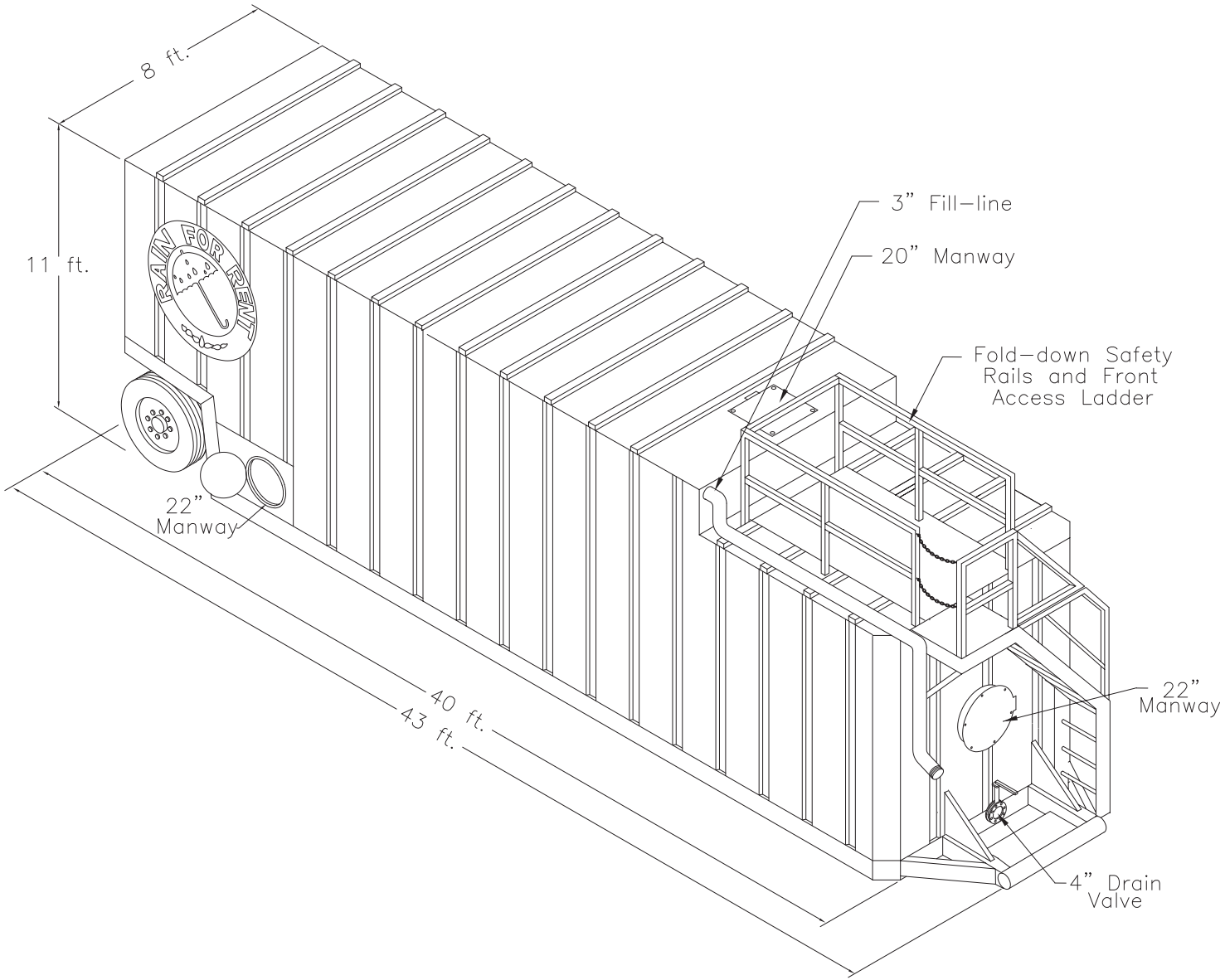

DATE: 3-25-03
SCALE: NTS
DESIGNED:
CHECKED:
DRAWN: S.HERNANDEZ
SHEET D

BI-LEVEL TANK

21,000 GALLON STEEL BI-LEVEL TANK

DETAIL

Rain For Rent
Engineering
3404 STATE ROAD PO BOX 2248 BAKERSFIELD CA 93303

ALL INFORMATION CONTAINED IN OR ASSOCIATED WITH THIS DRAWING IS CONSIDERED CONFIDENTIAL AND PROPRIETARY TO RAIN FOR RENT. ALL REGULATORY OR DESIGN INFORMATION, INCLUDING BUT NOT LIMITED TO PRICE AND ALL SALES RIGHTS ARE CONFIDENTIAL AND PROPRIETARY AND TO RAIN FOR RENT AND COMPANIES OR CUSTOMERS OWNING THE RIGHTS OF PROPERTY. REPLICATION OF PROPERTY WITHOUT THE PRIOR WRITTEN CONSENT OF RAIN FOR RENT.

SHEET 1 OF 1

DRAWING NUMBER
103419

JOB NUMBER
1030004

21,000 GALLON WORKSAFE ™
STEEL BI-LEVEL TANK

Features

- Unique safety stairway
- Totally enclosed tank
- Quick Kleen "V" shaped floor with two 4" valves at floor level
- Easy to move
- Optional vapor tight features and liquid level gauge
- Optional steam coils

Technical

WORKSAFE™ Bi-Level steel tanks are available with or without an epoxy coated interior. This tank has a "V" shaped Quick Kleen floor which allows any residual fluid in the tank to be easily flushed out the floor level 4" valves. Staircase guard rails and three 22" confined space entry hatches are standard equipment. Optional epoxy coatings offer increased chemical resistance and higher degree of cleanliness for sensitive environmental applications. (Chemical resistance charts are available.) High strength steel walls hold fluids up to 16 pounds per gallon.

Material Specifications

Steel construction, totally enclosed, and optional internal two part epoxy coating. Two 4" butterfly valves with Buna seals standard located at either end of the "V" shaped floor. Permanently attached axles for maximum maneuverability. Staircase attached to the front and a collapsible guard rail system on the roof of the tank. Optional level gauge. Vacuum pressure relief valve standard. Optional vapor recovery fitting. Three 22" vapor tight access hatches. Other gasket materials needs available to match your application.

Rain for Rent
P.O. Box 2248
Bakersfield CA 93303
800-742-7246
661-393-1542
FAX 661-393-1542
www.rainforrent.com
info@rainforrent.com

Rain for Rent is a registered trademark of Western Oilfields Supply Company. Features and Specifications are subject to change without notice.

REV.NO.	DESCRIPTION	PREVIOUS DWG	BY	DATE

ITEM	QTY.	REF.	DESCRIPTION

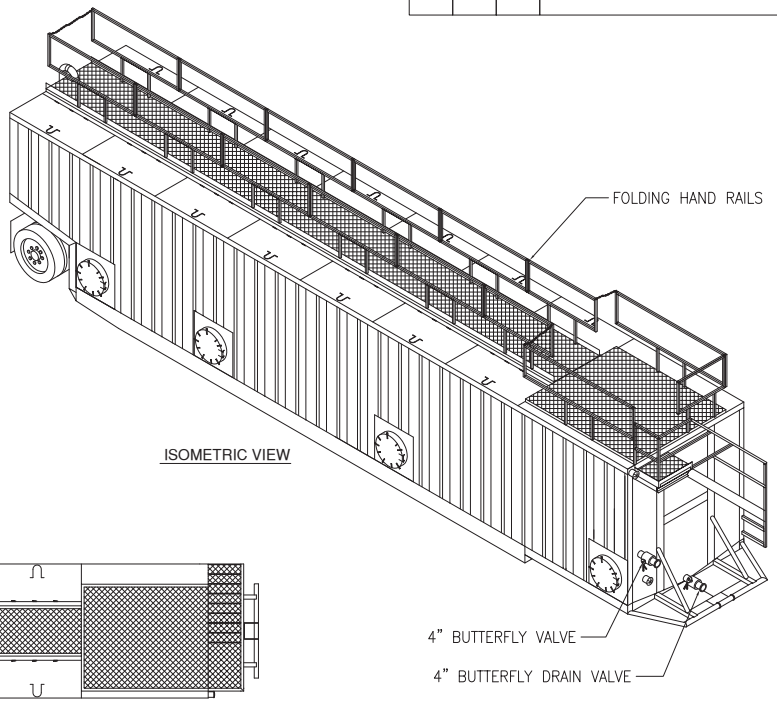

ISOMETRIC VIEW

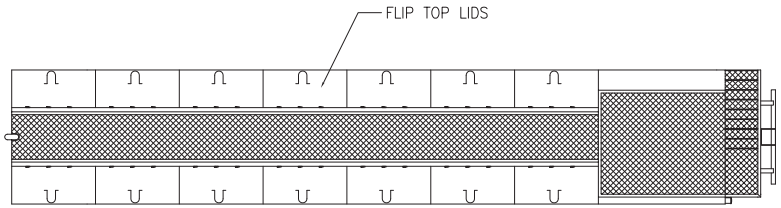

PLAN VIEW

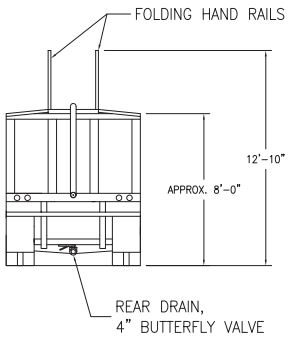

REAR VIEW

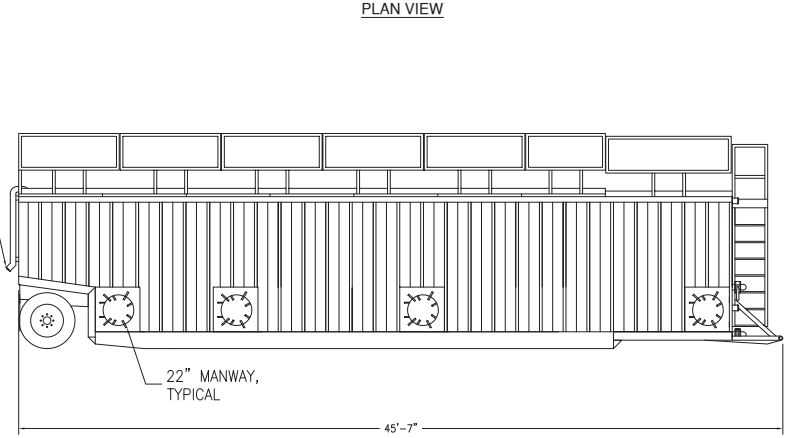

CURBSIDE VIEW

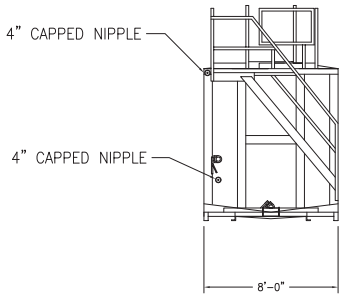

FRONT VIEW

Date 05-07-02
Scale NTS
Designed
Checked K.MUSICK
Drawn M.STEVENSON

FLIP TOP TANK

18,100 GALLON

FRONTIER STYLE TANK

Rain For Rent Engineering
3404 State Road PO Box 2248 Bakersfield Ca 93303

All information contained in or disclosed by this document is considered confidential and proprietary by Lisa Company, any possession, use, duplication or reproduction of this information without express written permission is prohibited. All rights are reserved. Rain For Rent and Rain For Rent Engineering are trademarks of Rain For Rent. Unauthorized use of these trademarks is prohibited.

1 Sheet of 1

Drawing Number
102301

Job Number
1010710

Steel Tank

Flip Top Weir

Overview:

18,100 gallon flip top weir tanks from Rain for Rent have a standard “V” shaped floor for ease of draining all stored liquids completely through a 4” butterfly valve with Buna seals standard.

Features:

Store liquids with confidence with Rain for Rent’s 18,100 gallon flip top weir tank. Permanently attached axels for maximum maneuverability allow this 18,100 gallon tank to be moved with ease on the jobsite and a safety staircase ensures proper protection for workers on site. Internal weirs allow for extra filtration and settling of materials.

Specs:

Manways	Four 22” hatches
Material	Steel
Capacity	18,100 gallons
Dry weight	27,000 lbs.
Footprint:	516” x 96” x 126”

Accessories:

- Spillguard
- Suction and Discharge Hoses
- Level gauges

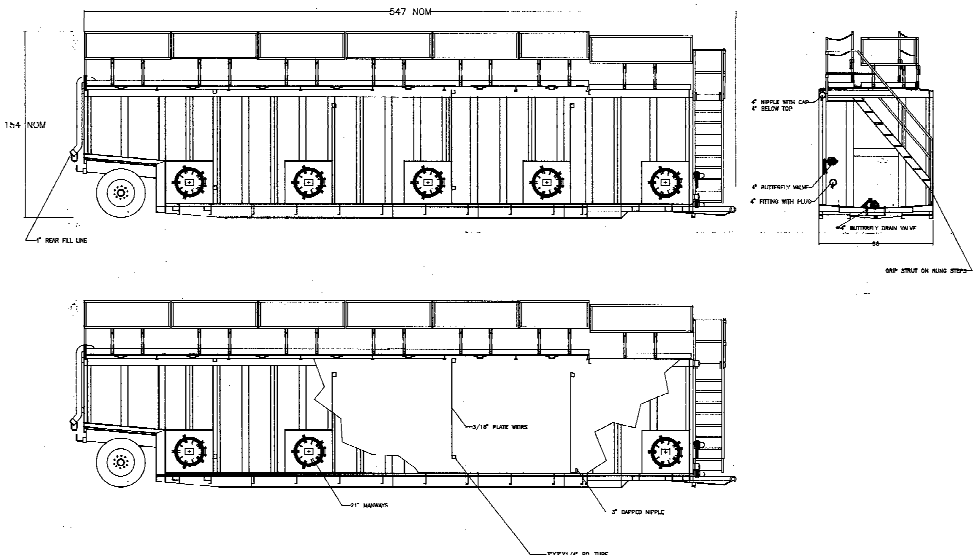

PUMPS • TANKS • FILTRATION • PIPE • SPILLGUARDS

Rain for Rent is a registered trademark of Western Oilfields Supply Company. Features and specifications are subject to change without notice.

Liquid ingenuity.™

800-742-7246
rainforrent.com

NOTE:
OVERALL SHIPPING DIMENSION: 9'-4" L X 4'-0" W X 6'-2" H

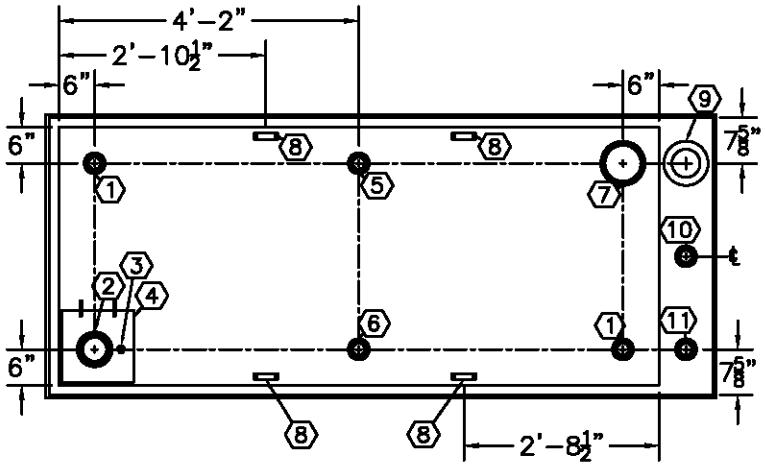

TOP VIEW

ITEM	SIZE	SUGGESTED FUNCTION
1	2"	SPARE
2	4"	FILL
3	1/2"	DRAIN FOR SPILLBOX
4	7 GAL.	SPILLBOX, DWG."SBB002"
5	2"	PRIMARY TANK WORKING VENT
6	2"	MECHANICAL GAUGE/SPARE
7	6"	PRIMARY TANK EMERGENCY VENT
8	SMALL	LIFTING LUG
9	6"	SECONDARY CONTAINMENT EMERGENCY VENT
10	2"	SECONDARY MONITOR PORT
11	2"	SECONDARY WORKING VENT

TANK SPECIFICATIONS

VENTING CAPACITY: PRIMARY TANK - 147,000 CUBIC FEET PER HOUR
SECONDARY TANK - 168,000 CUBIC FEET PER HOUR
MATERIAL: PRIMARY TANK - 10 GA.
SECONDARY TANK - 10 GA.

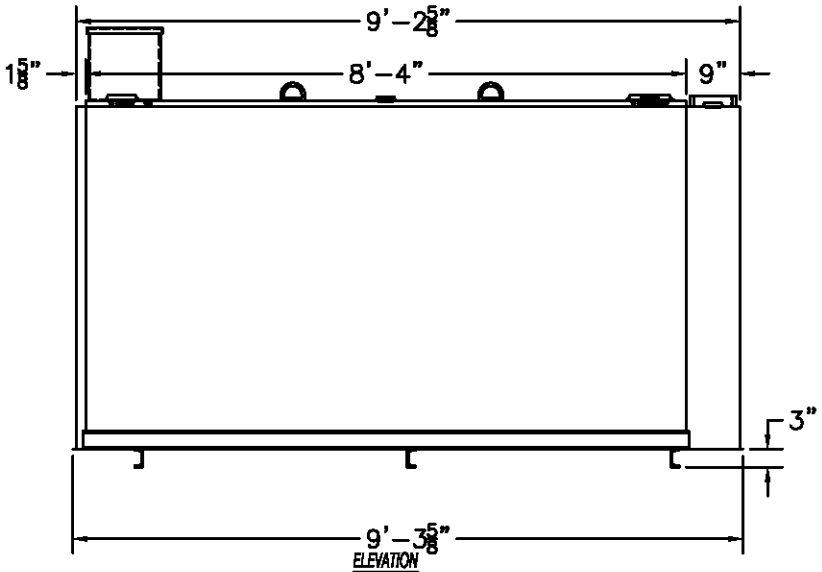

ELEVATION

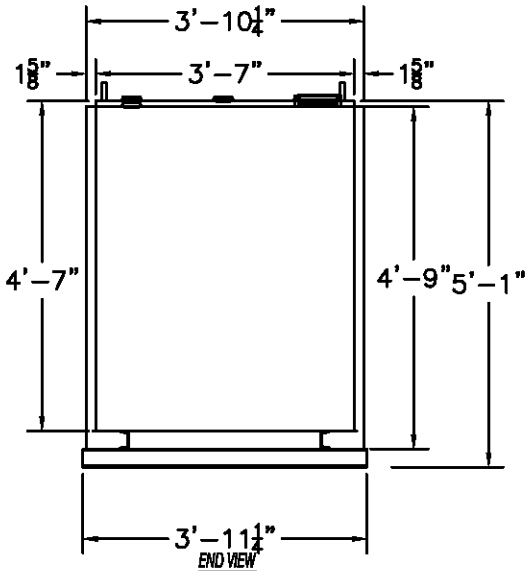

END VIEW

PRODUCT CODE	GALLONS	DESCRIPTION	OVERALL SIZE	SHIP WT.
LCAA101MDS001	1,000	UL-142 DOUBLE WALL LUBE CUBE TANK W/SPILLBOX	9'-4" L X 4'-0" W X 5'-1" H	2,400 LBS.

THIS DRAWING AND DESIGN SHOWN HEREIN IS THE PROPERTY OF CONTAINMENT SOLUTIONS. USE OR COPIES THEREOF CANNOT BE MADE WITHOUT WRITTEN CONSENT.

CONTAINMENT SOLUTIONS

CUSTOMER NAME	APPROVED BY:	DATE:

DRAWN BY: D. ROVANG	DATE DRAWN: 03-01-09
DWG NUMBER: 5100119	SCALE: 1:32
REV: / REV BY: / DATE:	SHEET: 1 OF 1